Reference Manual
7P00370-H01, Rev K
January 2023

Rosemount™ 370XA Gas Chromatograph

ROSEMOUNT™

EMERSON™

Notice

EMERSON ("SELLER") SHALL NOT BE LIABLE FOR TECHNICAL OR EDITORIAL ERRORS IN THIS MANUAL OR OMISSIONS FROM THIS MANUAL. SELLER MAKES NO WARRANTIES, EXPRESSED OR IMPLIED, INCLUDING THE IMPLIED WARRANTIES OF MERCHANTABILITY AND FITNESS FOR A PARTICULAR PURPOSE, WITH RESPECT TO THIS MANUAL AND, IN NO EVENT, SHALL SELLER BE LIABLE FOR ANY SPECIAL OR CONSEQUENTIAL DAMAGES INCLUDING, BUT NOT LIMITED TO, LOSS OF PRODUCTION, LOSS OF PROFITS, ETC.

PRODUCT NAMES USED HEREIN ARE FOR MANUFACTURER OR SUPPLIER IDENTIFICATION ONLY AND MAY BE TRADEMARKS/ REGISTERED TRADEMARKS OF THESE COMPANIES.

THE CONTENTS OF THIS PUBLICATION ARE PRESENTED FOR INFORMATIONAL PURPOSES ONLY AND, WHILE EVERY EFFORT HAS BEEN MADE TO ENSURE THEIR ACCURACY, THEY ARE NOT TO BE CONSTRUED AS WARRANTIES OR GUARANTEES, EXPRESSED OR IMPLIED, REGARDING THE PRODUCTS OR SERVICES DESCRIBED HEREIN OR THEIR USE OR APPLICABILITY. WE RESERVE THE RIGHT TO MODIFY OR IMPROVE THE DESIGNS OR SPECIFICATIONS OF SUCH PRODUCTS AT ANY TIME.

SELLER DOES NOT ASSUME RESPONSIBILITY FOR THE SELECTION, USE, OR MAINTENANCE OF ANY PRODUCT. RESPONSIBILITY FOR PROPER SELECTION, USE, AND MAINTENANCE OF ANY SELLER PRODUCT REMAINS SOLELY WITH THE PURCHASER AND END-USER.

Warranty

1. LIMITED WARRANTY: Subject to the limitations contained in Section 2 herein and except as otherwise expressly provided herein, Emerson ("Seller") warrants that the firmware will execute the programming instructions provided by Seller and that the Goods manufactured or Services provided by Seller will be free from defects in materials or workmanship under normal use and care until the expiration of the applicable warranty period. Goods are warranted for twelve (12) months from the date of initial installation or eighteen (18) months from the date of shipment by Seller, whichever period expires first. Consumables and Services are warranted for a period of 90 days from the date of shipment or completion of the Services. Products purchased by Seller from a third party for resale to Buyer ("Resale Products") shall carry only the warranty extended by the original manufacturer. Buyer agrees that Seller has no liability for Resale Products beyond making a reasonable commercial effort to arrange for procurement and shipping of the Resale Products. If Buyer discovers any warranty defects and notifies Seller thereof in writing during the applicable warranty period, Seller shall, at its option, promptly correct any errors that are found by Seller in the firmware or Services, or repair or replace F.O.B. point of manufacture that portion of the Goods or firmware found by Seller to be defective, or refund the purchase price of the defective portion of the Goods/Services. All replacements or repairs necessitated by inadequate maintenance, normal wear and usage, unsuitable power sources, unsuitable environmental conditions, accident, misuse, improper installation, modification, repair, storage or handling, or any other cause not the fault of Seller are not covered by this limited warranty, and shall be at Buyer's expense. Seller shall not be obligated to pay any costs or charges incurred by Buyer or any other party except as may be agreed upon in writing in advance by an authorized Seller representative. All costs of dismantling, reinstallation and freight, and the time and expenses of Seller's personnel for site travel and diagnosis under this warranty clause shall be borne by Buyer unless accepted in writing by Seller. Goods repaired and parts replaced during the warranty period shall be in warranty for the remainder of the original warranty period or ninety (90) days, whichever is longer. This limited warranty is the only warranty made by Seller and can be amended only in a writing signed by an authorized representative of Seller. Except as otherwise expressly provided in the Agreement, THERE ARE NO REPRESENTATIONS OR WARRANTIES OF ANY KIND, EXPRESSED OR IMPLIED, AS TO MERCHANTABILITY, FITNESS FOR PARTICULAR PURPOSE, OR ANY OTHER MATTER WITH RESPECT TO ANY OF THE GOODS OR SERVICES. It is understood that corrosion or erosion of materials is not covered by our guarantee.

2. LIMITATION OF REMEDY AND LIABILITY: SELLER SHALL NOT BE LIABLE FOR DAMAGES CAUSED BY DELAY IN PERFORMANCE. THE SOLE AND EXCLUSIVE REMEDY FOR BREACH OF WARRANTY HEREUNDER SHALL BE LIMITED TO REPAIR, CORRECTION, REPLACEMENT, OR REFUND OF PURCHASE PRICE UNDER THE LIMITED WARRANTY CLAUSE IN SECTION 1 HEREIN. IN NO EVENT, REGARDLESS OF THE FORM OF THE CLAIM OR CAUSE OF ACTION (WHETHER BASED IN CONTRACT, INFRINGEMENT, NEGLIGENCE, STRICT LIABILITY, OTHER TORT, OR OTHERWISE), SHALL SELLER'S LIABILITY TO BUYER AND/OR ITS CUSTOMERS EXCEED THE PRICE TO BUYER OF THE SPECIFIC GOODS MANUFACTURED OR SERVICES PROVIDED BY SELLER GIVING RISE TO THE CLAIM OR CAUSE OF ACTION. BUYER AGREES THAT IN NO EVENT SHALL SELLER'S LIABILITY TO BUYER AND/OR ITS CUSTOMERS EXTEND TO INCLUDE INCIDENTAL, CONSEQUENTIAL, OR PUNITIVE DAMAGES. THE TERM "CONSEQUENTIAL DAMAGES" SHALL INCLUDE, BUT NOT BE LIMITED TO, LOSS OF ANTICIPATED PROFITS, LOSS OF USE, LOSS OF REVENUE, AND COST OF CAPITAL.

Safety messages

Observe all environmental and personal safety messages described in this document, warning labels on the GC, and your company's operational safety requirements.

Rosemount 370XA Gas Chromatograph safety warnings

Observe these safety messages for the Rosemount 370XA Gas Chromatograph.

⚠ WARNING

EXPLOSION HAZARD

Failure to de-energize the analyzer may cause serious injury or death to personnel.

Do not open when energized or when an explosive atmosphere may be present.
Keep cover tight while circuits are live.

⚠ WARNING

EXPLOSION/FIRE HAZARD

Failure to observe this warning may cause serious injury or death to personnel.

Do not open when an explosive atmosphere may be present.
Do not open while energized.
Use supply cables or wires suitable for at least 176 °F (80 °C).

⚠ WARNING

BURN HAZARD

Internal components may be hot. Failure to allow the GC to cool down may result in injury to personnel.

Allow the GC to cool down before disassembling any components.
Always wear proper personal protective equipment (PPE) when disassembling the analyzer.

⚠ WARNING

Physical access

Unauthorized personnel may potentially cause significant damage to and/or misconfiguration of end users' equipment. This could be intentional or unintentional and needs to be protected against.

Physical security is an important part of any security program and fundamental to protecting your system. Restrict physical access by unauthorized personnel to protect end users' assets. This is true for all systems used within the facility.

NOTICE

Prior to converting carrier gas to hydrogen, it is recommended to review local hazardous area requirements to ensure compliance.

Contents

Chapter 1 About Rosemount 370XA Gas Chromatographs 7
1.1 Description 7
1.2 Specifications 9
1.3 Certifications 12
Chapter 2 Equipment overview 15
2.1 Exterior 15
2.2 Interior 21
Chapter 3 Installation 27
3.1 Site requirements 27
3.2 Actions upon receipt of the gas chromatograph (GC) 27
3.3 Mounting the gas chromatograph (GC) 28
3.4 Mounting the sample conditioning system 37
3.5 Connect to the carrier gas 42
3.6 Connect to actuation gas 44
3.7 Connect to the calibration gas 44
3.8 Connect to the sample gas 47
3.9 Electrical connections 50
3.10 Connect to serial ports 54
3.11 Connect to Ethernet ports 58
3.12 Connect to external devices 60
3.13 Connect to power 64
3.14 Start up and configure the gas chromatograph 66
Chapter 4 Using the Rosemount 370XA 75
4.1 Connect a local computer to the Rosemount 370XA 75
4.2 Interacting with the local operator interface (LOI) 76
4.3 Local operator interface (LOI) screen descriptions 77
4.4 Common local operator interface (LOI) tasks 92
4.5 Advanced configuration and operation topics 101
Chapter 5 Preventative maintenance 109
5.1 Save diagnostic data 109
5.2 Set up auto-calibration in software 109
5.3 Display trend data 109
5.4 Configure the valve timing 110
Chapter 6 Recommended spare parts 111
Chapter 7 Replacing the Maintainable Module™ 113
7.1 Remove the Maintainable Module™ 113

7.2 Install a Maintainable Module™ 115

Chapter 8 Overhauling the analytical module 119

8.1 Replace a stream selection solenoid 120
8.2 Replace an analytical valve solenoid 121
8.3 Overhaul the analytical valve 123
8.4 Overhaul the sample shut-off valve 133
8.5 Replace the carrier pressure control valve 137
8.6 Replace the carrier gas pressure sensor 140
8.7 Replace the detectors 141
8.8 Replacing the chromatograph columns 146
8.9 Replace the O-rings in a tubing connector 153

Chapter 9 Troubleshooting 155

9.1 Alarms 155
9.2 GC won't power up 166
9.3 Un-normalized total error 166
9.4 Replace the central processing unit (CPU) 168
9.5 Recover the central processing unit (CPU) 170
9.6 Peaks retention time drift and total unnormalized concentration fluctuations 171

Appendix A Flowcharts 173

A.1 The GC won't power up 173
A.2 Un-normalized total error 174
A.3 Carrier pressure alarms 176
A.4 Heater won't reach set point 177
A.5 Module validation fails 181
A.6 Auto valve timing fails 183

Appendix B Pre-defined Modbus® map files 185

Appendix C China RoHS table 187

1 About Rosemount 370XA Gas Chromatographs

1.1 Description

This manual contains information pertaining to the Rosemount 370XA Gas Chromatograph (GC). The purpose of this manual is to provide detailed installation, operation, maintenance, and troubleshooting procedures.

The Rosemount 370XA Gas Chromatograph is part of the XA series of Emerson gas chromatographs. Designed to simplify natural gas measurement analysis, the Rosemount 370XA provides greater ease of use and increased measurement performance for your C6+ and C7+ BTU/CV analysis.

Another unique benefit of the Rosemount 370XA is its Maintainable Module™ technology, which allows you to easily replace the GC module in the field in approximately two hours, including warm-up and purge, greatly reducing downtime and overall operating costs.

Figure 1-1: Rosemount 370XA Gas Chromatograph

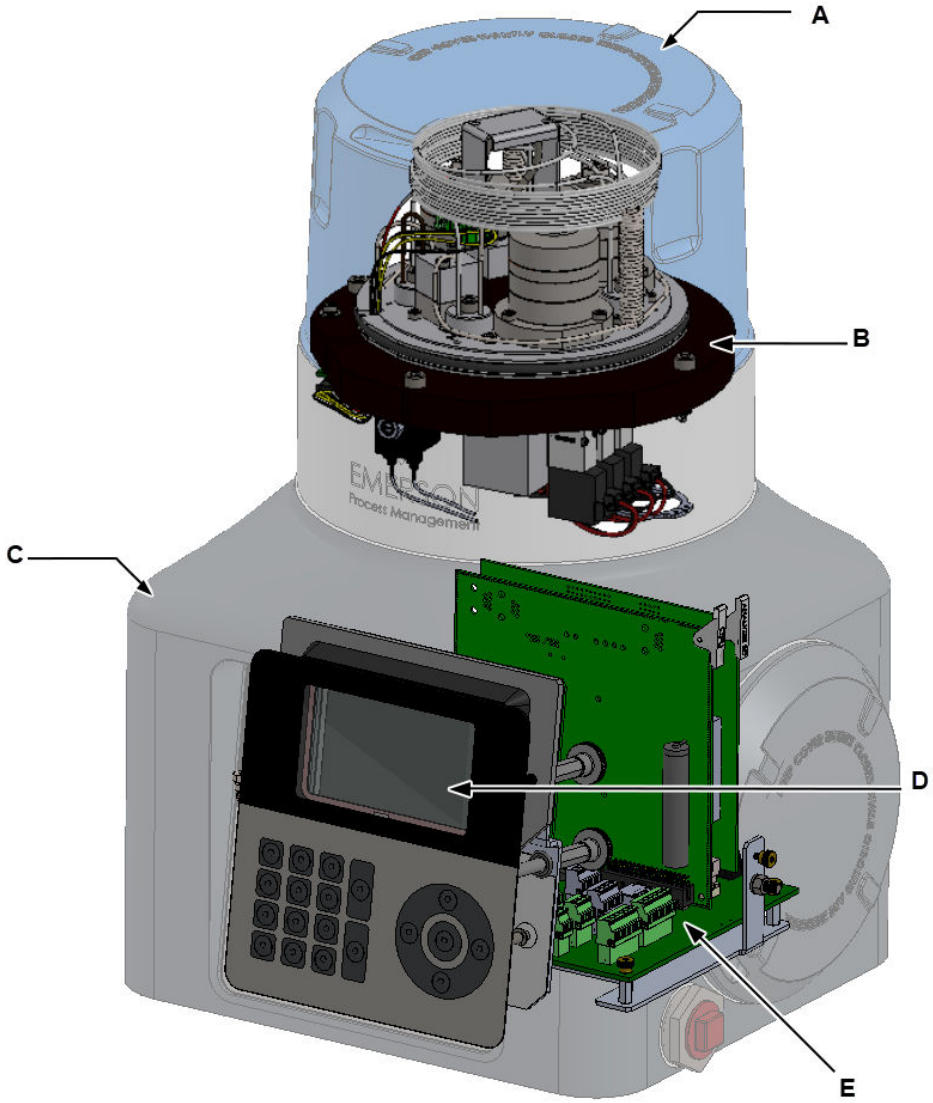

A. *Upper section*
B. *Analysis module*
C. *Lower section*
D. *LCD display*
E. *Electronics*

Structurally, the Rosemount 370XA has two major sections. The upper section (A) consists of the analysis module (B). The lower section (C) of the gas chromatograph houses the electronics (E) and the LCD display (D).

1.2 Specifications

Table 1-1: Electronics Specifications

Specification	Description
Power supply	24 Vdc (standard) at the unit 21-30 Vdc (operating range) at the unit Class 2 and SELV as specified by CEC, C22.1, and NEC, National Fire Protection Association (NFPA) **Note** Provide the gas chromatograph (GC) with one 5-amp circuit breaker for protection.
Power consumption at 72 °F (22 °C)	50 Watts (startup) 20 Watts (steady state)

Table 1-2: Construction Specifications

Specification	Description
Environmental temperature	-4 to 140 °F (-20 to 60 °C)
Enclosure protection rating	IP65 and Type 4X
Dimensions (without sample system or mounts)	18 in. (height) x 12 in. (width) x 11 in. (depth) 460 mm (height) x 305 mm (width) x 280 mm (depth)
Mounting options	Pipe, wall, or floor stand
Weight (without sample system or mounts)	50 lb. (23 kg)

Table 1-3: Performance Specifications

Specification	Description
Applications	4 minute C6+ standard analysis, 12 minute PAC approved C6+, 6 minute C7+(1)
Repeatability	**Controlled environment** • ±0.0125% calorific value • ±0.125 BTU/scf per 1,000 BTU/scf **Uncontrolled environment: -4 to 140 °F (-20 to 60 °C)** • ± 0.025% calorific value • ± 0.25 BTU/scf per 1,000 BTU/scf
Metrology approvals(2)	Measurement Canada, OIML, GOST/EAC, LNE, OFGEM, GOST (4 and 12 minute analysis)
Calculations	International Organization for Standardization (ISO) 6976, American Gas Association (AGA) 8, Gas Processors Association (GPA) 2172 (using the GPA 2145 physical properties table)

Table 1-3: Performance Specifications *(continued)*

Specification	Description
Carrier gas • Purity • Moisture content • Hydrocarbon content • Supply reserve • Carrier gas flow	Zero-grade helium at 80-90 psig (5.5-6.2 BarG) or hydrogen • 99.995% (zero-grade) • Less than 10 ppm • Less than 0.5 ppm • 80-90 psig (5.5-6.2 BarG) • Approximately 10 cc/min
Actuation gas • Moisture content • Particulate • Supply pressure	Helium, nitrogen, or clean dry air at 80-90 psig (5.5-6.2 barg) • Less than 10 ppm • Less than 2 microns • 80-90 psig (5.5-6.2 barg)
Sample input pressure range	10 to 30 psig (0.7 to 1.7 barg)
Valves	Three 6-port diaphragm analytical valves
Oven	Airless iso-thermal
Detector	Thermal conductivity detector (TCD)
Streams	Up to three sample streams and one calibration stream
Vibration	Meets ASTM- 4169 specifications

(1) Custom light process applications available upon request.
(2) For additional approvals and certifications information, see Emerson.com/RosemountGasAnalysis

Table 1-4: Standard Communications

Specification	Description
Ethernet	Two available connections: one RJ-45 plug-in port and one 4-wire termination. Both with 10/100 Mbps.
Analog input	One standard input filtered with transient protection, 4–20 mA that is user scalable and assignable.
Analog outputs	Two isolated outputs, 4–20 mA.
Digital inputs	One input that is user assignable, optically isolated, and rated to 30 Vdc at 0.5 A.
Digital output	One user-assignable output, Form C and electro-mechanically isolated, 24 Vdc.
Serial ports	Two termination blocks, configurable as RS-232 or RS-485.

Table 1-5: Archived Data Storage Capabilities

Type(1)	Maximum number of records	Remarks
Analysis results	86464	240 days with 4 minute cycle time
Final calibration results	370	1 year of final calibration results
Calibration results	100	

Table 1-5: Archived Data Storage Capabilities *(continued)*

Type[1]	Maximum number of records	Remarks
Final validation results	370	1 year of final validation results
Validation results	100	
Analysis chromatogram	3406	Approximately 9.4 days assuming 4 minute cycle time
Final calibration chromatograms	370	1 year of final calibration chromatograms[2]
Final validation chromatograms	370	1 year of final validation chromatograms[2]
Protected chromatograms	100	User-selectable
Hourly averages (up to 250 variables)[3]	250	10.4 days
Daily averages (up to 250 variables)[3]	365	1 year
Weekly averages (up to 250 variables)[3]	58	1 year
Monthly averages (up to 250 variables)[3]	12	1 year
Variable averages (up to 250 variables)[3]	250	
Every run (up to 250 variables)[3]	250	
Alarm logs	1000	
Event logs	1000	

(1) Based on four-minute BTU with daily calibration application.
(2) The GC can store final calibration or final validation chromatograms for up to a year, provided that no more than one calibration or validation is run per day, and the cycle time is less than 15 minutes. If the cycle time exceeds 15 minutes, the oldest final calibration or validation chromatograms are deleted to make room for newer ones.
(3) You can have a total of up to 250 averages of all types, including hourly, 24 hour, weekly, monthly, variable, and every run averages.

Table 1-6: Maximum Approved Gas Pressure

Gas stream	Maximum approved pressure
Sample/calibration	30 psig (2.1 barg)
Carrier	90 psig (6.2 barg)
Actuation	90 psig (6.2 barg)

1.3 Certifications

Table 1-7: ATEX certifications

Certification	Description
Manufacturer	Rosemount, Inc. Houston, TX, USA
Product	Rosemount 370XA Gas Chromatograph
Certificate number	Sira 13ATEX1030
Certification code	Ex db IIB+H2 T6 Gb
Ambient range	Ta = -20 °C to +60 °C
Serial number	Device dependent
Year of manufacture	Device dependent
Other markings	CE 2813
Warnings	As shown on equipment. Also see Safety compliance certifications.
Electrical ratings	DC: 21 - 30 V, 55 W maximum
Number and size of the conduit entries	3 conduit entries: M32 X 1.5
EN 60079-0	Explosive atmospheres - Part 0: Equipment - General requirements
EN 60079-1	Explosive atmospheres - Part 1: Equipment protection by flameproof enclosures "d"

Table 1-8: IECEx equipment for use in explosive atmospheres

IECEx	Ex db IIB+H2 T6 Gb Ta = -20 °C to 60 °C	IP65	IECEx CSA 13.0005

Table 1-9: CSA certifications

C US	Class I, Div. 1; Groups B, C, and D; T6; Type 4X Class I, Zone 1; Ex/AEx db IIB + H2; T6; IP65 Pollution degree: 2 Overvoltage category: II Maximum use altitude: 6,561.7 ft. (2000 m) above sea level

UKCA certifications for dome name plate

UK CA 0518	CSAE21UKEX1540

Safety compliance certifications

⚠ WARNING

Read manual

Read Reference Manual before operating.
Refer to Manual for thread connection size.

⚠ WARNING

Explosion

Do not open when energized or when an explosive atmosphere may be present.
Keep cover tight while circuits are alive.

⚠ WARNING

Clean joints

Cover joints must be cleaned before replacing cover.

⚠ WARNING

Electric shock

It is the responsibility of the end user to ensure that any cables connected to this device are capable of withstanding a temperature of at least 176 °F (80 °C).

⚠ WARNING

Seal

A seal shall be installed within 2 in (51 mm) of the enclosure.

⚠ WARNING

Safety protection

Failure to follow this warning may compromise the product's safety protection method and void the product certification. If the equipment is used in a manner not specified by the manufacturer, the protection provided by the equipment may be impaired.

Repairs or alterations are not permitted on any flameproof paths, features, or joints.

2 Equipment overview

2.1 Exterior

Figure 2-1: Rosemount 370XA Front View

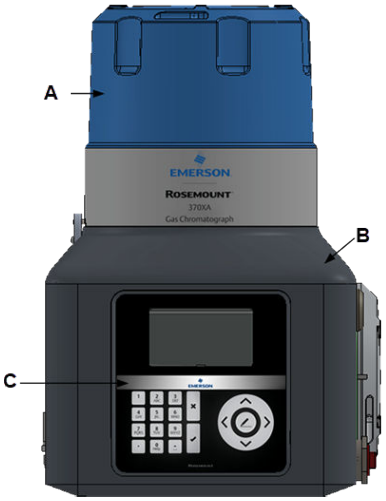

A. *Explosion-proof dome*
Unscrew the explosion-proof dome to gain access to the analytical oven.

B. *Explosion-proof body*
The explosion-proof body houses the electronics.

C. *Local operator interface*
The local operator interface (LOI) contains keys and an LCD display for interacting with the gas chromatograph.

⚠ CAUTION

Removing one or more of the tamper-proof screws voids the warranty.

Figure 2-2: Rosemount 370XA Left Side View

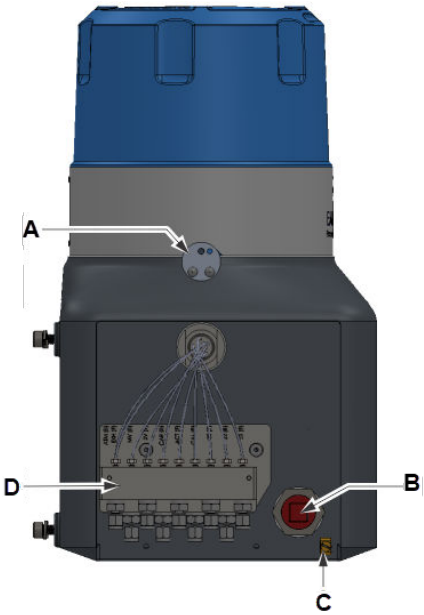

A. *Locking bolt*
Secures the dome to the enclosure. To engage the lock, screw in the hex screw with a 2 mm hex wrench; to release the lock, unscrew the hex screw with a 2 mm hex wrench.

B. *Cable entry*
M32 conduit entry. This is the most convenient entry point for the power cable. If not using this entry for cables, use a certified plug. See Table 2-1.

Table 2-1: Certified Conduit Plugs

Certification type	***Additionally supplied certified parts***
Canadian Standards Association (CSA)	*M32 to ¾-in. adapter and a ¾-in. sealing plug*
ATEX/IECEx	*M32 plug*

C. *Grounding lug*
Connects to an external grounding system, as required for ATEX-certified installations.

D. *Tubing bulkhead*
The central hub for the sample, carrier, and other gas inlets.

Figure 2-3: Rosemount 370XA Right Side View

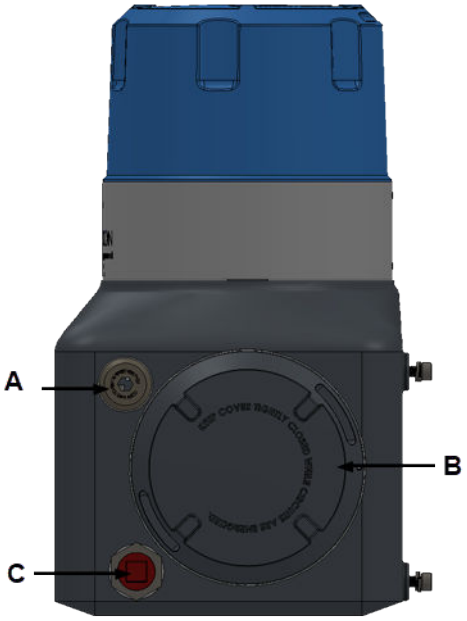

A. Upper cable entry. Certified M32 plug.
B. Port hole: Unscrew and remove to gain access to the field wiring connections and the circuit boards.
C. Lower cable entry.

NOTICE

Lower cable entry: This is the most convenient entry point for connecting cables to the Ethernet port, communications ports, and external device terminals. If not using this entry for cables, use a certified conduit plug. See Table 2-1.

Figure 2-4: Rosemount 370XA Rear View

A. Mounting bolts: These M8 bolts are used to mount the gas chromatograph (GC), depending upon the mounting configuration chosen. Each bolt is 0.7 in. (18 mm) long.

Figure 2-5: Local Operator Interface

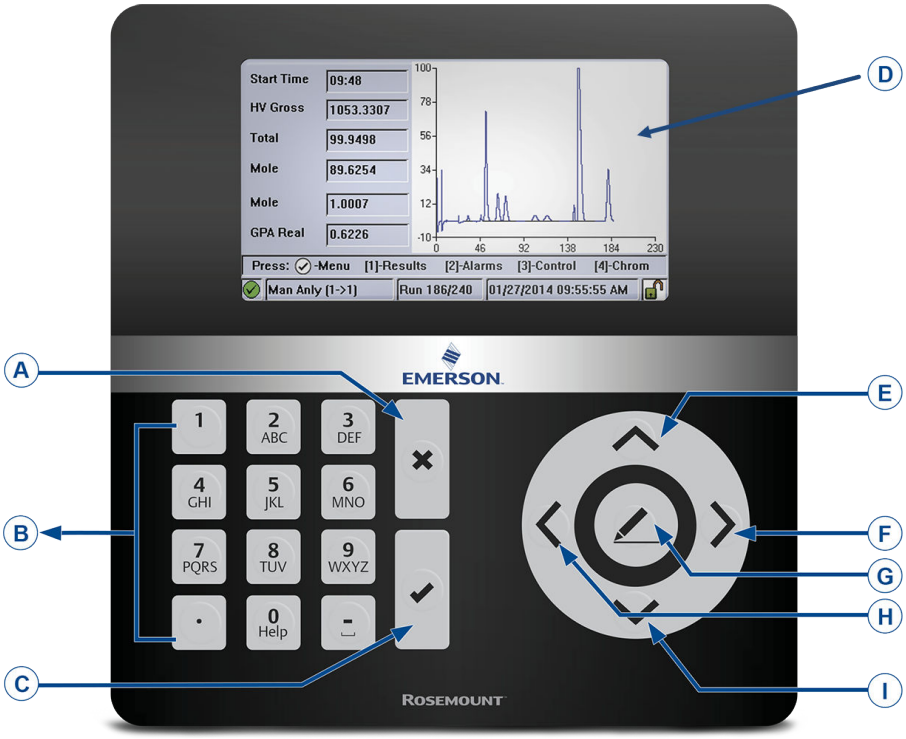

A. Exit/cancel
B. Alphanumerical keypad
C. Enter
D. Full color screen: 480 x 272 pixels
E. Up
F. Right
G. Select/edit
H. Left
I. Down

The flows of the vents are:

- Sample vent: 10 to 50 cc/min of sample gas for approximately 3.5 minutes of the four minute cycle.
- Measure vent: Continuous flow of less than 10 cc/min of carrier gas and 10 cc of sample gas per analysis cycle.
- Sample bypass: Continuous flow of 150 to 200 cc/min of sample gas.

Figure 2-6: Tubing Bulkhead

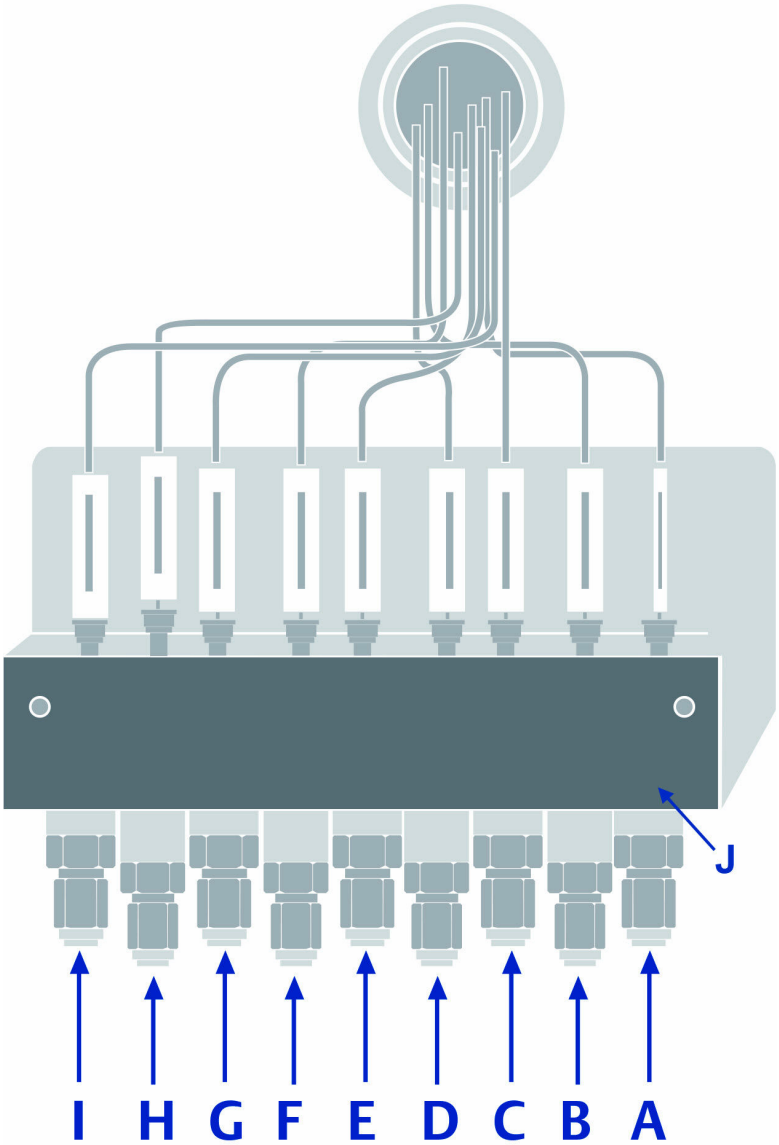

A. *Stream 1*
B. *Stream 2*
C. *Stream 3*
D. *Calibration*
E. *Actuation*
F. *Carrier*
G. *Sample vent*
H. *Measure vent*
I. *Exhaust vent*
J. *Bulkhead*

2.2 Interior

Figure 2-7: Back plane board

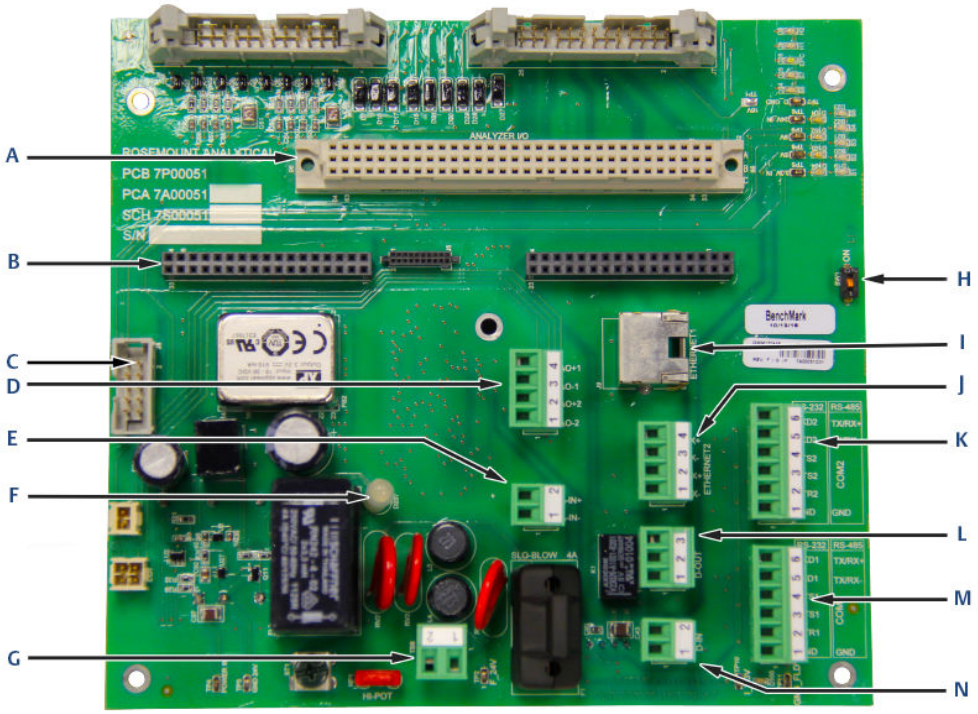

A. ANA: Analyzer board
B. CPU: Central processing unit board
C. J8: Local operator interface (LOI) connector
D. TB10: Analog outputs (two)
E. TB2: Analog input
F. LED: LED light[1]
G. TB8: 24 Vdc power
H. SW1: DHCP switch
I. RJ45: Plug-in Ethernet port
J. TB5: Wired Ethernet port
K. TB9: Communication 2 port
L. TB3: Digital output
M. TB4: Communication 1 port
N. TB1: Digital input

The back plane has several diodes that provide a visual indication of the health of the gas chromatograph (GC).

(1) *The LED light is always on for illumination purposes only.*

Figure 2-8: Back plane diodes

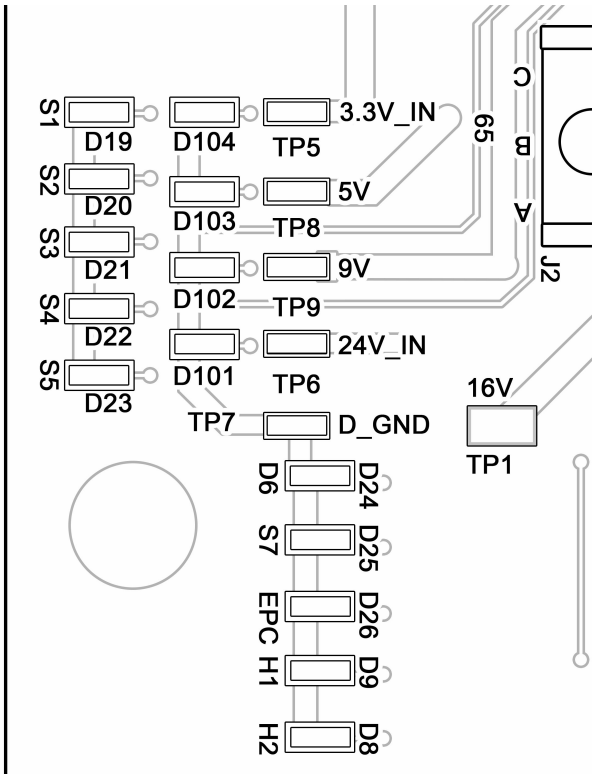

Table 2-2: Diode legend

Abbreviation	Description
S1	Solenoid 1
S2	Solenoid 2
S3	Solenoid 3
S4	Solenoid 4
S5	Solenoid 5
D104	Diode for 3.3 V
D103	Diode for 5 V
D102	Diode for 9 V
D101	Diode for 24 V
TP5	Test point for 3.3 V
TP8	Test point for 5 V
TP9	Test point for 9 V
TP6	Test point for 24 V
TP7	Test point for ground
D6	Solenoid 6

Table 2-2: Diode legend *(continued)*

Abbreviation	Description
S7	Solenoid 7
EPC	Electronic pressure controller
H1	Heater 1
H2	Heater 2
TP1	Test point for 16 V

Note

When the security switch is locked (flipped down), the following actions are not allowed:

- Changing configuration (such as valve timing, integration events, components, stream assignments, etc.)
- Resetting archive results and logs.

Figure 2-9: Maintainable Module, side view

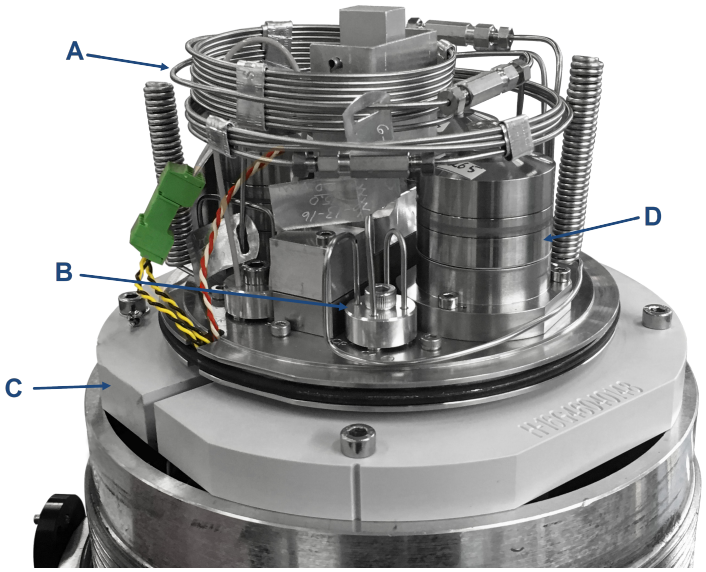

A. *Chromatography columns*
Separates the sample gas into its component compounds so that they can be detected and measured. The GC's pre-coiled, micro-packed columns contain active materials that selectively impede the flow of individual component compounds based on their boiling point, so that components with lower boiling points take longer to travel through the columns than components with higher boiling points. The GC uses four chromatograph columns and a single restrictor column.

B. *Sample shut off valve*
Shuts off the flow of gases to the sample loop for the first five seconds of an analysis to allow the sample loop to equalize to atmospheric pressure through the sample vent. This ensures that a consistent amount of sample gas is injected into the analytical columns each analysis cycle regardless of the sample pressure or flow.

Note
It is good practice to replace the diaphragm of the sample shut-off valve whenever the analytical valve diaphragms are replaced.

C. *Manifold assembly*
Most of the components of the analytical oven are mounted on the manifold, which also contains a multi-layered printed flow-path board (PFPB) that replaces the interconnecting tubing that traditionally exists between the valves, columns, solenoids, and detectors.

D. *Analytical valves*
Manipulates the flow of carrier and sample gases through the columns and the detector. The analytical valves use diaphragm-actuated pistons to block or release the flow of the gases between adjacent ports on the valve. The majority of maintenance on the maintainable module involves replacing the diaphragms and cleaning the sealing surfaces of the analytical valves.

Figure 2-10: Maintainable Module, bottom view

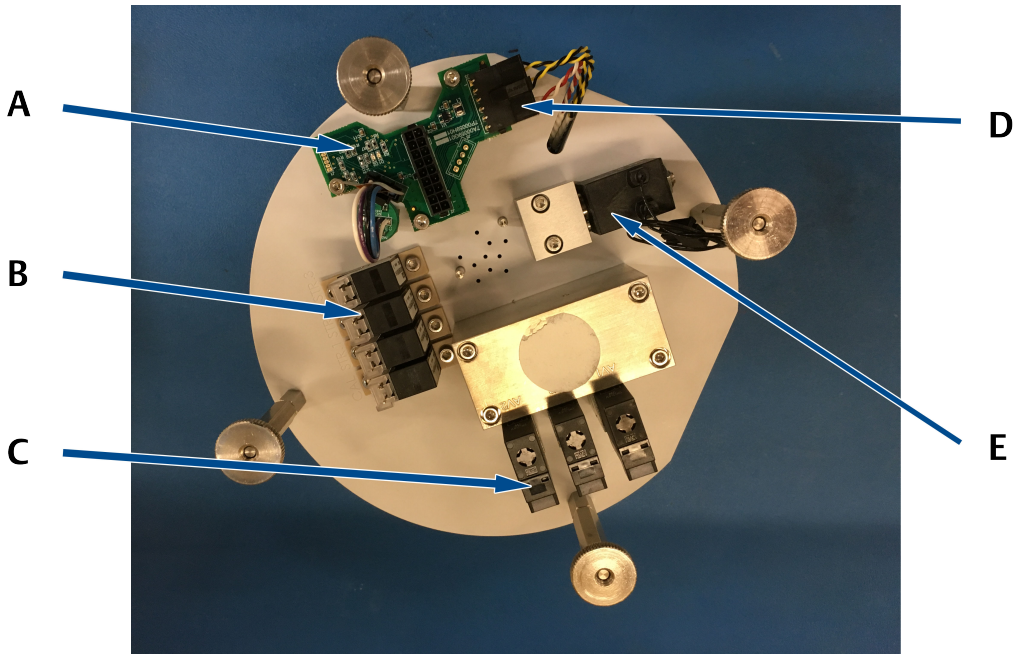

A. *Intelligent module board*
To facilitate easy replacement of the Maintainable Module, its operating and calibration settings are stored on the intelligent module board (IMB). When a new Maintainable Module is installed, it downloads these settings from the IMB. When the settings are changed, the new configurations are uploaded to the IMB.

B. *Stream selection solenoids*
The sample gas stream to be analyzed is selected by a two-way isolation solenoid. Each stream has a unique stream-selection solenoid. A Maintainable Module can have up to three stream-selection solenoids and one calibration solenoid.

C. *Valve actuation solenoids*
Each analytical valve is actuated by its own four-way solenoid. The actuation solenoid directs the actuation gas to the appropriate pistons in its associated actuation valve.

D. *Carrier gas pressure sensor*
Measures the carrier gas pressure as a part of the electronic pressure control.

E. *Carrier gas pressure control valve*
Electronically controls the carrier gas pressure.

Heater cap Controls the thermal environment surrounding the analytical components of the module, which is crucial to ensure reliable and repeatable analysis.

Detector Detects and measures the components of the sample gas after the components are separated by the columns. A single thermal conductivity detector (TCD) has two thermistors that respond to the difference in thermal conductivity between the carrier gas and the separated components.

3 Installation

3.1 Site requirements

Consider the following when choosing an installation site for the gas chromatograph (GC):

- This GC is designed to operate at temperatures between -4 and 140 °F (-20 and 60 °C).
- Install the GC as close as possible to the sample point, but allow for adequate access for maintenance tasks and adjustments. Also, install the GC in a way that allows easy access and viewing of the local operator interface (LOI).
- Allow at least 10 in. (254 mm) on the right hand side of the GC to permit access to the side portal hole where the field terminations are made.
- Allow a minimum of 10 in. (254 mm) above the top of the dome to facilitate access to the analytical module.

3.2 Actions upon receipt of the gas chromatograph (GC)

3.2.1 Unpacking

⚠ WARNING

LIFTING HAZARD

Failure to take precautions when unpacking the gas chromatograph (GC) may result in dropping the GC and causing injury to personnel or damaging the equipment.

Product weighs 50 lb. (23 kg) without the sample system. Carefully open and remove the GC from the packing crate. If necessary, ask for assistance.

3.2.2 Inspection and verification of received equipment

Check the equipment against the packing slip to see if the shipment is complete.

Inspect the equipment for damage incurred during shipment. If any parts or assemblies appear to have been damaged, do the following:

1. File a claim with the carrier.
2. Take photos of the damaged area(s).
3. Contact your local Emerson sales representative.

3.3 Mounting the gas chromatograph (GC)

The Rosemount 370XA can be installed in one of the following mounting options:

- Wall mount
- Pole mount

Check the packing slip or the GC's sales order to learn which mounting hardware was selected for it.

Note
All options require the same mounting bracket, but use different hardware to mount it.

The pole or wall must be able to support at least 50 lb. (22.7 kg) and withstand the forces applied when performing routine maintenance, such as removing the oven enclosure dome.

When putting a GC into its final position, be careful to avoid damaging any of the external components or their attachments. Also, make sure you understand the installation procedure before handling the GC and collect the appropriate tools beforehand.

3.3.1 Minimum installation clearances

Figure 3-1: Installation Clearances

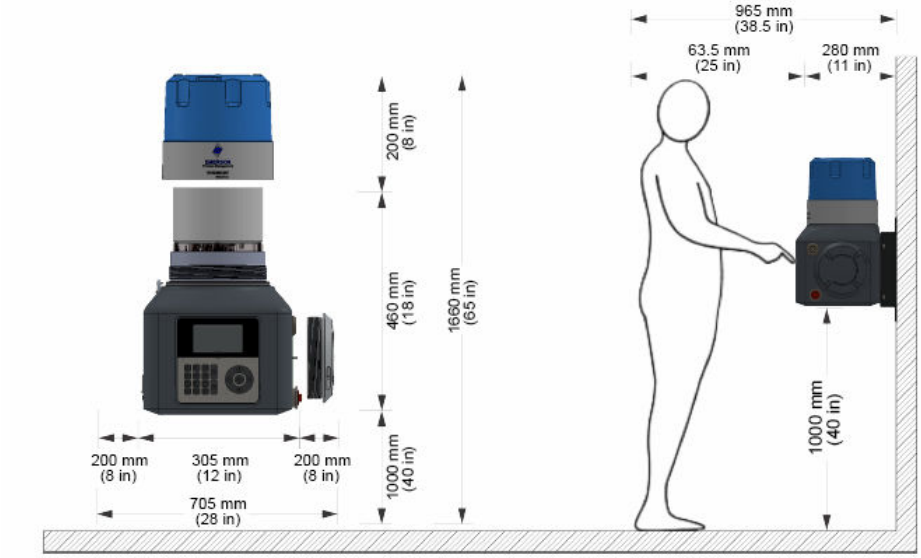

3.3.2 Pole mounting

The pole mount arrangement uses a pair of U-shaped pipe clamps and a mounting bracket to attach the gas chromatograph to a pole that is four inches in diameter.

Figure 3-2: Pole and Floor Stand Mounting Dimensions

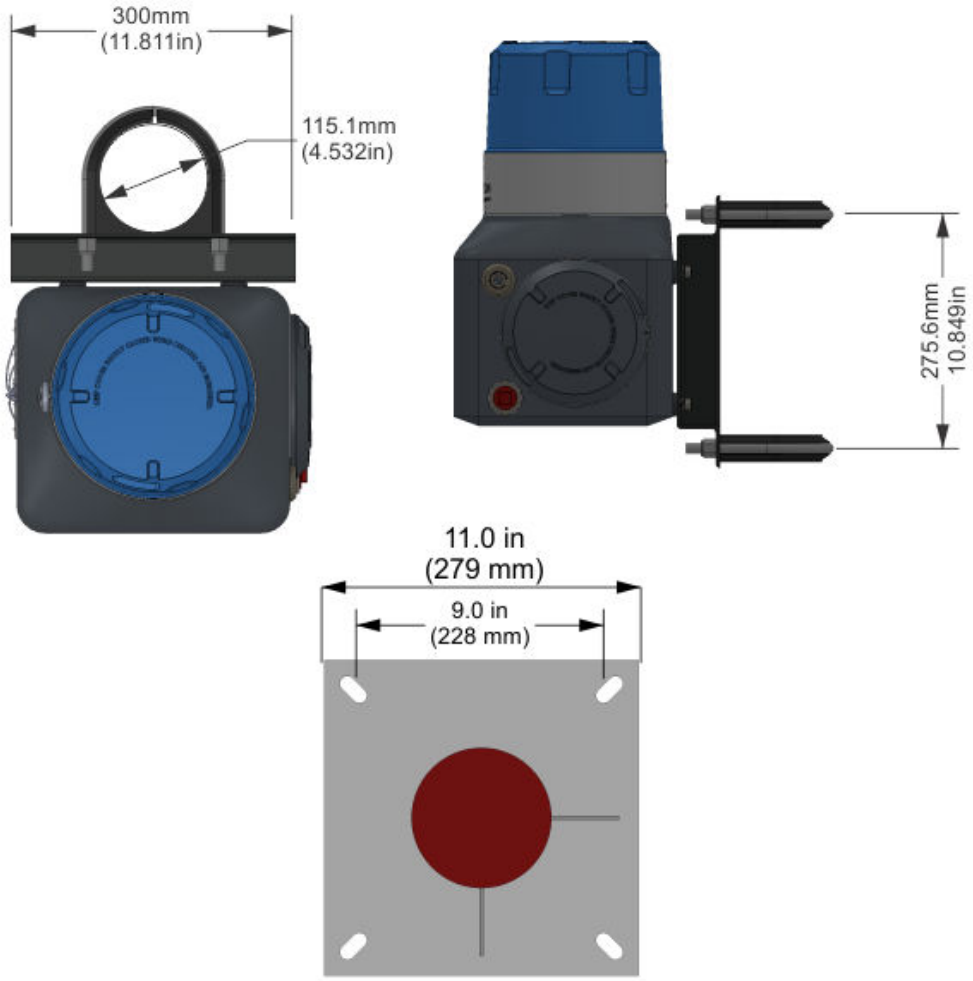

Mount the gas chromatograph (GC) to a pole

Procedure

1. Slide the u-bolt plastic inserts onto the pole and place the lower clamp approximately 40 in. (1 m) from the ground and the upper clamp 10¾-in. (27 cm) above the lower clamp.

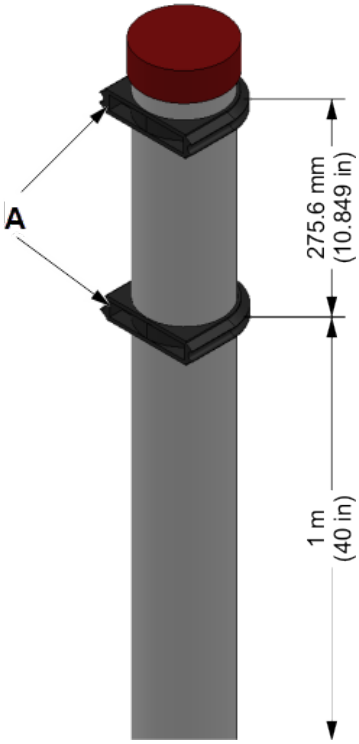

a. U-bolt plastic inserts

2. Slide the two u-bolts into the plastic inserts.

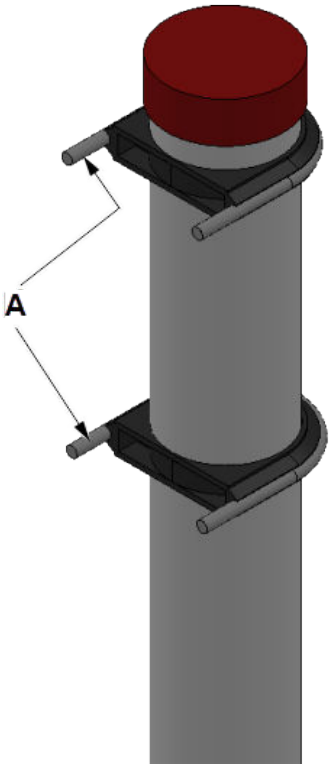

   a. U-bolts

3. Attach the mounting bracket to the pole by matching the bracket's mounting holes to the prongs of the pipe clamps.

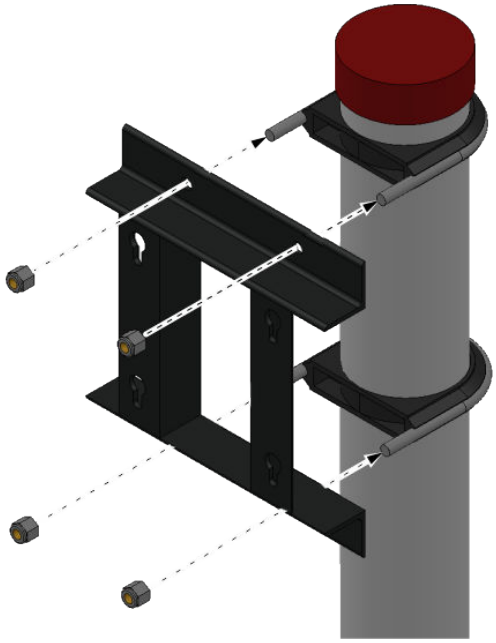

4. Tighten the nuts onto the prongs.

The mounting bracket should be firmly attached to the pole.

Related information

Secure the GC to the mounting bracket

Mount the gas chromatograph (GC) to a floor stand

Anchor the floor stand base to the foundation with a 4½-in. (12.7 mm) or ⅜-in. (9.5 mm) cement anchor.

3.3.3 Wall mounting

Figure 3-3: Wall Mount Bracket Parts

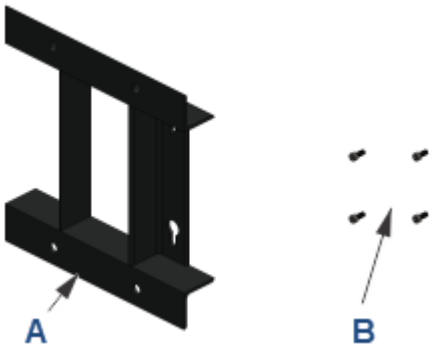

A. *Mounting bracket*
B. *Four 7/16-in. (11 mm) mounting bolts with washers*

Note
You will also need four ⅜-in. (10 mm) threaded wall anchors that are capable of supporting at least 50 lb. (23 kg). The wall anchors are not supplied.

Figure 3-4: Wall Mount Dimensions

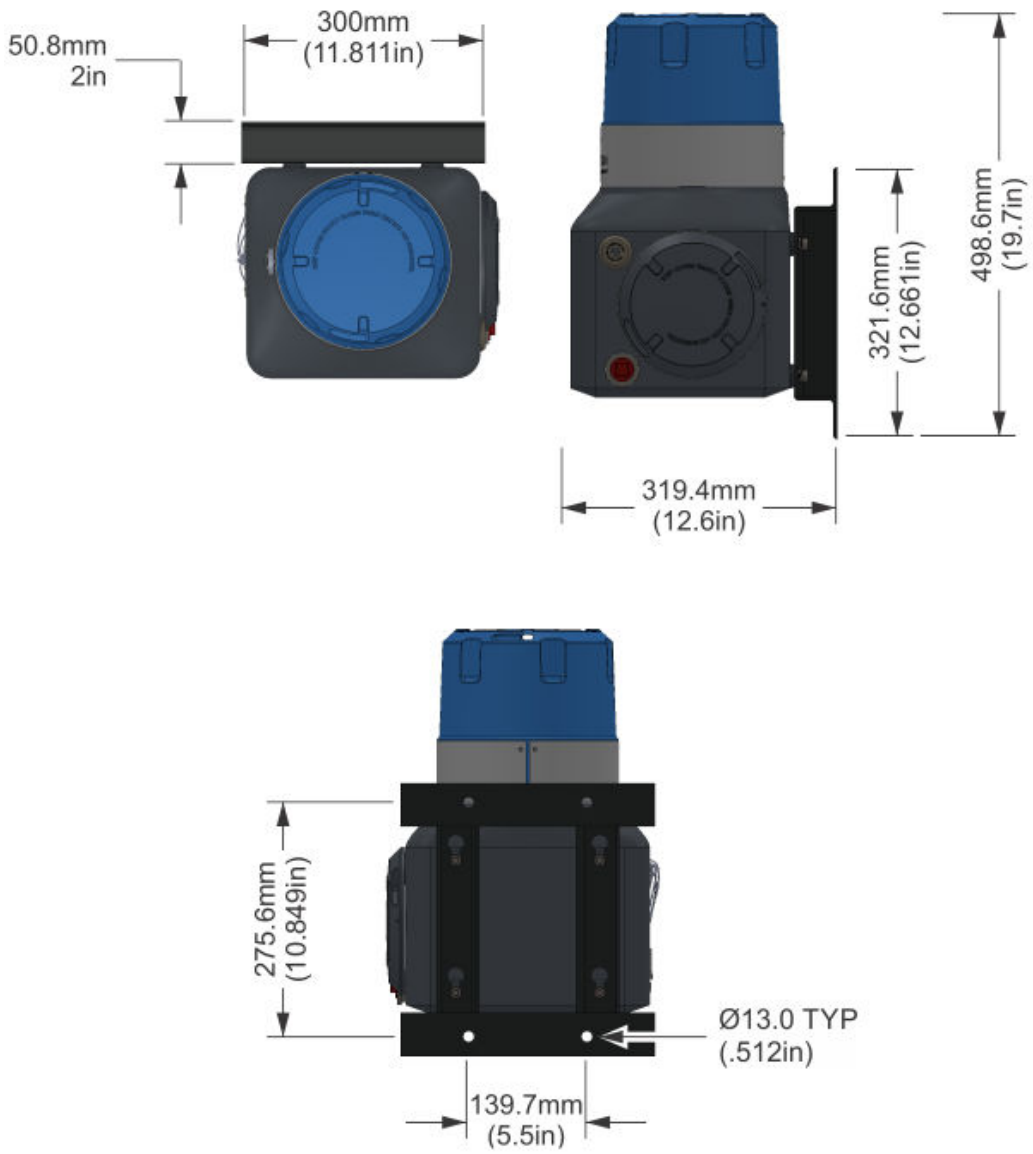

Wall mount the GC

Prerequisites

The wall must be able to hold approximately 50 lb. (23 kg).

Procedure

1. Install four threaded wall anchors according to the dimensions given in Figure 3-4. Use the bracket as a guide to locate the anchors correctly before drilling the holes.

   The threads of the anchors should protrude from the wall by 1½-in. (40 mm).

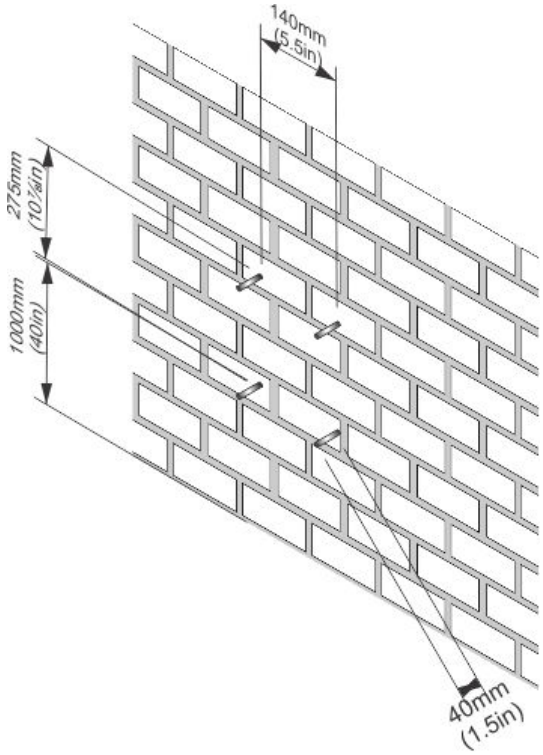

2. Place the mounting bracket on to the wall anchors and tighten the mounting nuts. Ensure that the bracket is attached firmly to the wall.

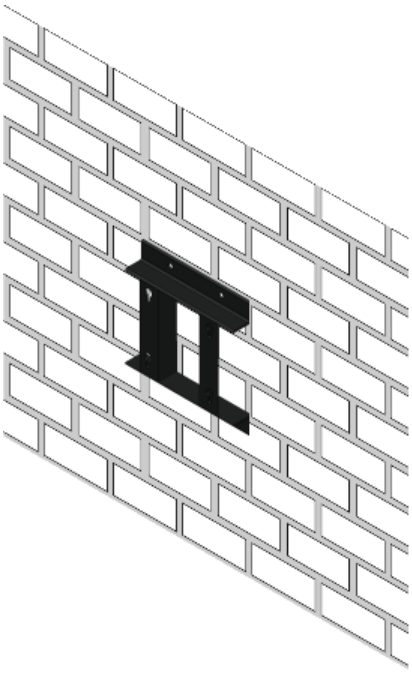

Postrequisites

See Secure the GC to the mounting bracket

3.3.4 Secure the GC to the mounting bracket

Procedure

1. Screw two bolts, without the washers, into the top mounting holes on the back of the GC, leaving ½ in. (15 mm) of the thread exposed.

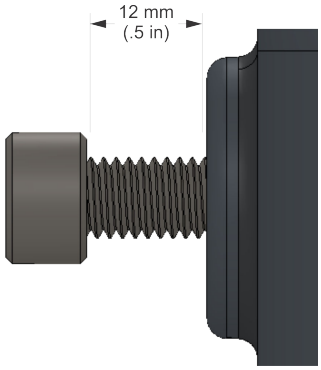

2. Maneuver the GC to insert the two top bolts into the eyelets of the mounting bracket and allow the bolts to drop down and hold the GC loosely on the bracket.

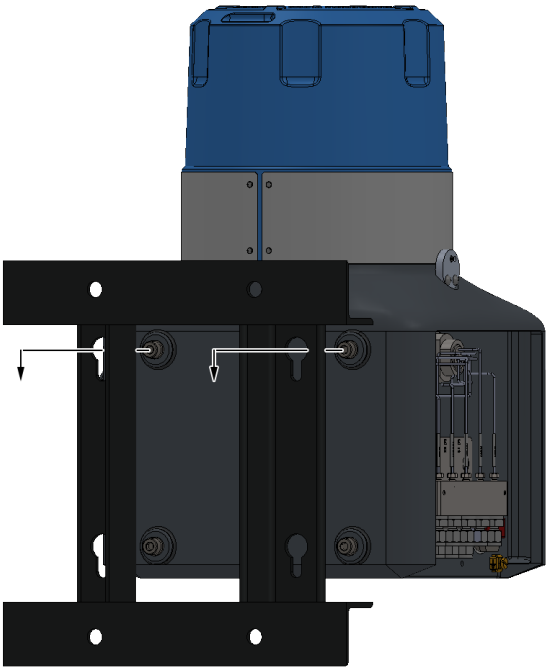

3. Screw in the two bottom bolts through the mounting bracket with the washers on. The flat washer should be against the bracket, and the spring washer between the flat washer and the bolt head. Tighten these two bolts by hand so that they secure the GC in place.
4. One at a time, remove the top bolts, put on the washers, and screw the bolts into the back of the GC and hand tighten.

3.3.5 Optional gas bottle accessories

You can use these optional accessories to hold gas bottles on the pole mount.

Figure 3-5: Pole Mount with Accessories

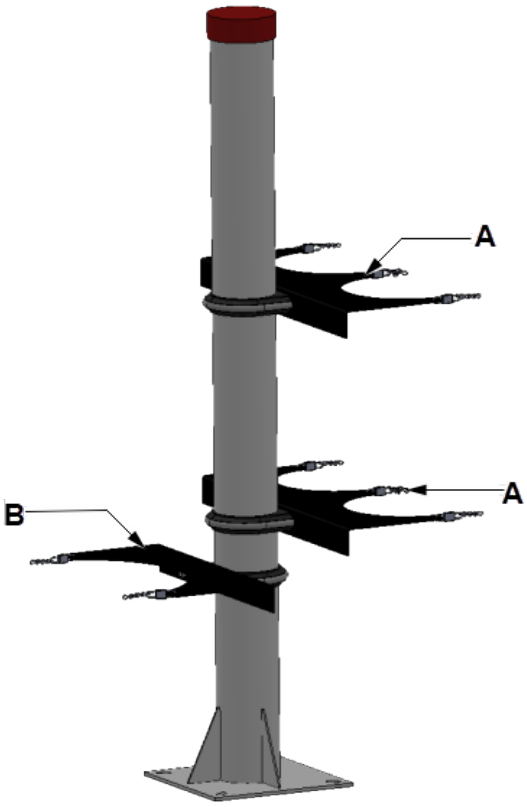

A. Carrier gas bottle cradle assemblies (two)
B. Calibration gas bottle cradle assembly

3.4 Mounting the sample conditioning system

There are several sample conditioning systems (SCS) available for the Rosemount 370XA. The side-mounted single stream SCS includes all of the components required for single stream natural gas applications on a metal plate that conveniently attaches to the side of the GC. For multiple stream applications, several plate-mounted options are available that can be mounted to a pole, wall, or floor stand.

It is also possible to use a third-party SCS. A third-party SCS must contain the following functional components:

- Moisture drier for the carrier gas
- 2-micron or better particulate filter
- Liquid filter/shut-off
- Flow control to limit the sample flow to between 20 and 50 cc/min

⚠ CAUTION

Using a sample conditioning system that does not include all of these components will invalidate your gas chromatograph's warranty.

⚠ WARNING

H_2 carrier units must use a sample plate which does NOT split actuation gas off for valve actuation.

3.4.1 Attach Rosemount single-stream, side-mounted sample conditioning system to the GC

Procedure

1. Angle the plate onto the left side of the GC so that the large mounting block fits behind the left edge of the cut-out. Swing the right side of the plate around until it attaches to the right side of the cut-out.

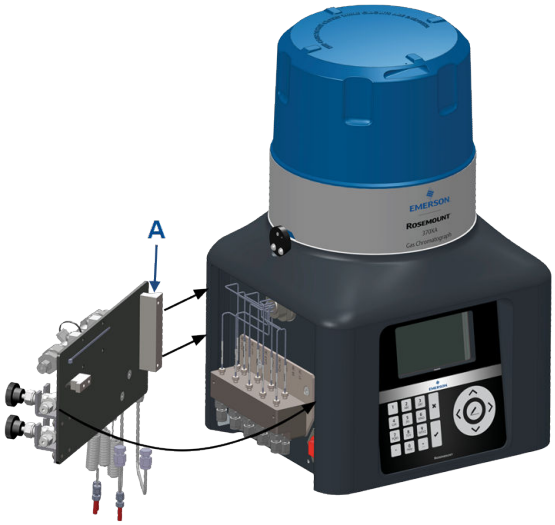

a. Mounting bar

2. Slide the small mounting bar (A) to the right so that it fits behind the right edge of the cut-out. Tighten the small mounting block's screws.

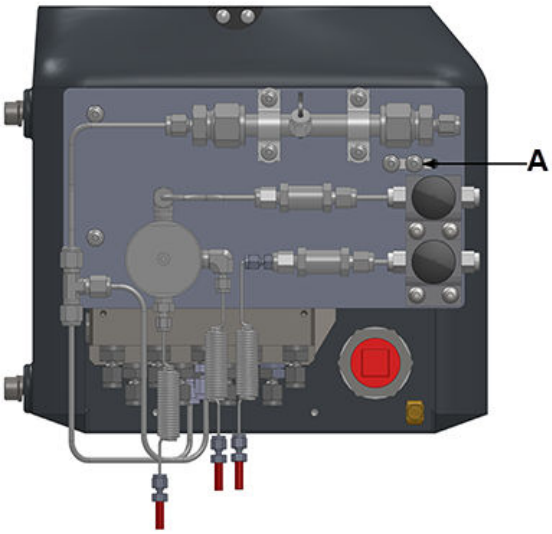

a. Mounting block

3.4.2 Connect sample conditioning system tubing to the GC

Procedure

1. Use the tubing supplied with the sample system to connect the stream, calibration, actuation, and calibration gases from the sample plate to the GC's manifold block.

Figure 3-6: Connecting the Gases to the Sample Plate (Helium Carrier Gas)

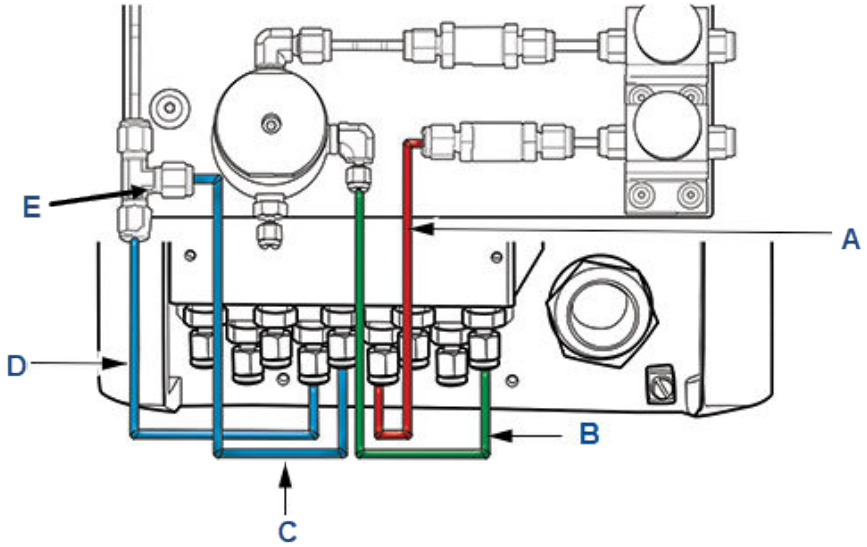

A. *Calibration tubing*
B. *Sample tubing*
C. *Actuation tubing*
D. *Carrier tubing*
E. *T-fitting (only if using helium as a carrier gas)*

Figure 3-7: Connecting the Gases to the Sample Plate (Hydrogen Carrier Gas)

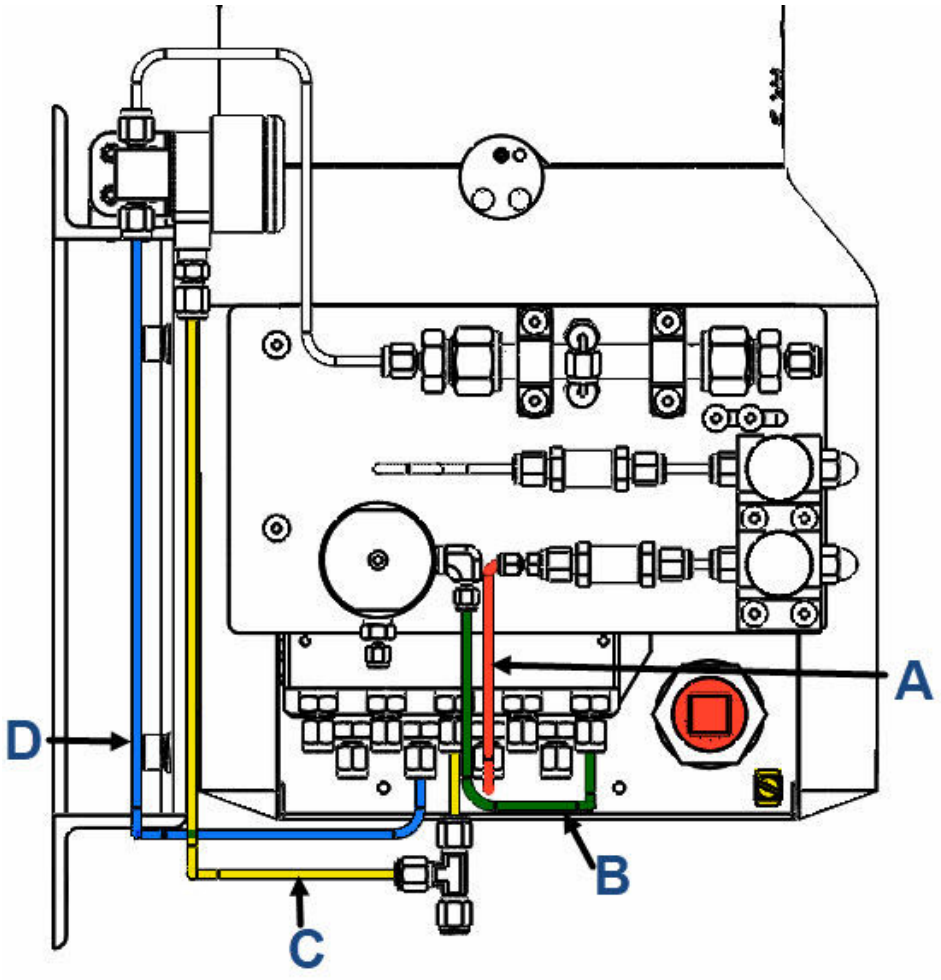

A. Calibration gas (red tube)
B. Stream 1 (green tube)
C. Actuation gas (yellow tube)
D. Carrier gas (blue tube)

2. Connect the atmospheric vents to a vent line of at least ⅜-in. (9.5 mm) diameter that is routed to the atmosphere in a safe area to ensure there is no back-pressure created on the vents.

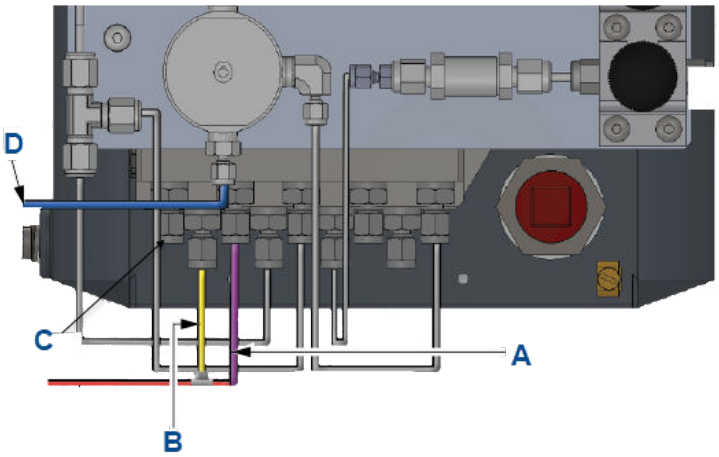

a. Sample vent
b. Measure vent
c. Actuation vent
d. Bypass vent

3.5 Connect to the carrier gas

Table 3-1: Carrier Gas Specifications

Carrier gas	Helium or hydrogen
Purity	99.995% (zero-grade)
Moisture content	Less than 10 ppm
Hydrocarbon content	Less than 0.5 ppm
Supply reserve	80-90 psig (5.5-6.2 BarG)
Carrier gas flow	Approx. 10 cc/min

Procedure

1. To ensure the continuous operation of the analyzer, install two high pressure carrier gas cylinders and connect them to the GC through a manifold arrangement that permits the replacement of empty cylinders without disrupting the operation of the analyzer.

   The manifold arrangement can be a manual valve arrangement or a commercially available auto switch-over dual regulator assembly. Figure 3-8 shows the carrier gas connector (A) on the tubing bulkhead.

Figure 3-8: Rosemount 370XA Carrier Gas Connection

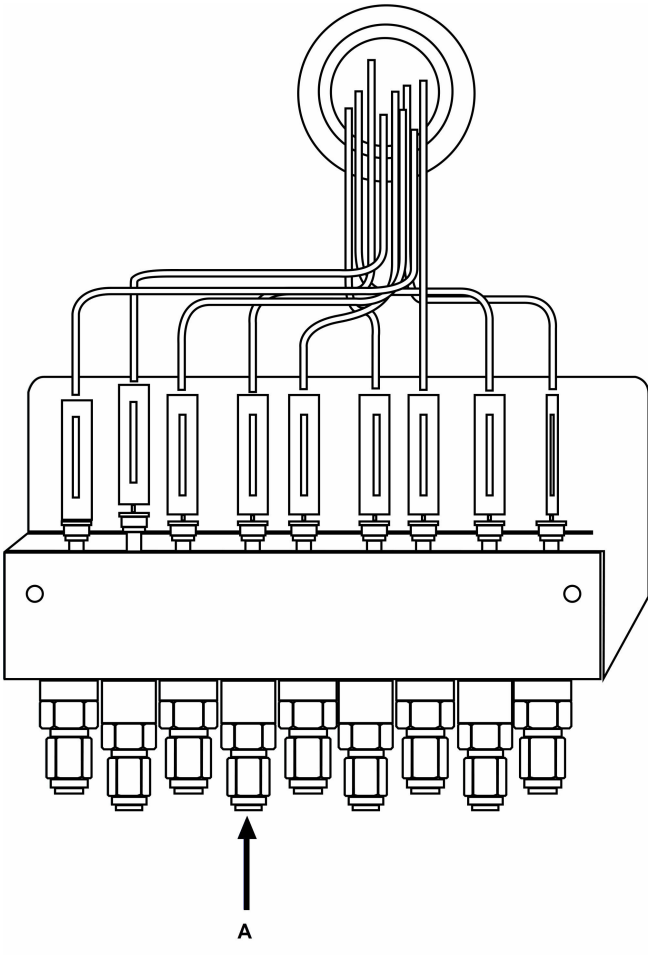

A. Carrier gas connection

2. Using a two-stage bottle regulator with stainless steel diaphragms, regulate the carrier gas from bottle pressure to 80-90 psig (5.5-6.2 Bar) if using helium as a carrier gas. If using hydrogen as a carrier gas, regulate it to 40 psig (2.8 BarG). Use a dual-stage regulator to ensure the outlet pressure will not change with changes in the bottle pressure. Use stainless steel diaphragms to avoid contaminating the analytical oven.
3. Use ⅛-in. (3.2 mm) stainless steel tubing that is clean and free of grease to connect from the carrier gas bottle manifold to the inlet of the carrier gas drier on the sample conditioning system.
4. Before making the final connection to the sample system, blow through the lines with helium for 30 seconds to remove any contamination, such as water or metal shavings, from cutting the tube.

⚠ WARNING

High pressures may damage the analyzer and cause an unsafe environment.

Regulate the carrier gas to 80-90 psig (5.5-6.2 Bar).

3.6 Connect to actuation gas

The analytical valves require actuation gas to operate. When helium is used as a carrier gas, the default configuration is to also use helium as the actuation gas.

Table 3-2: Actuation Gas Specifications

Moisture content	Less than 10 ppm
Particulate	Less than 2 microns
Supply pressure	80-90 psig (5.5-6.2 BarG)

Note
If you intend to use locally generated instrument air, ensure that the pressure is sufficient and use filters and dryers to ensure the actuation gas will meet the above specifications in order to avoid excessive maintenance.

3.6.1 Helium actuation gas

When using the carrier gas as the actuation gas, tee the actuation gas supply connection from the helium supply after the carrier drier.

3.6.2 Alternative actuation gas

If a gas other than the carrier gas is to be used as the actuation gas, connect the supply directly to the actuation gas port on the Rosemount 370XA gas manifold.

Use nitrogen, dry air, or some other non-hazardous gas as the actuation gas.

⚠ WARNING

Do not use hydrogen as actuation gas.

3.7 Connect to the calibration gas

The gas chromatograph requires a high quality, certified calibration gas to ensure accurate analysis. Although the Rosemount 370XA is typically set for an automatic daily calibration

run in custody transfer applications, you can use MON2020 to configure it for any time frequency or set it to manual calibration only.

Prerequisites

The calibration gas must contain each component that you want to measure. To ensure that all of the components in the calibration gas remain in the gas phase and that the composition remains consistent, install a calibration bottle heater blanket and use insulated or heat-traced stainless steel tubing between the calibration gas and the gas chromatograph.

Table 3-3 lists the recommended the ideal component concentrations for a calibration gas that can be used with most common natural gas applications.

Table 3-3: Ideal Calibration Component Concentrations

Component	Recommended concentration
Methane	89.57%
Ethane	5.0%
Propane	1.0%
i-butane	0.3%
n-butane	0.3%
2.2 dimethyl butane	0.015%
neo-pentane	0.1%
iso-pentane	0.1%
n-pentane	0.1%
n-hexane	0.015%
Nitrogen	2.5%
Carbon dioxide	1.0%

Dimethyl butane (2.2 concentration) is the lightest component. When added to n-hexane, enter it as the C6+ calibration concentration.

Figure 3-9 shows the calibration gas connection on the tubing bulkhead.

Figure 3-9: Calibration Gas Connector

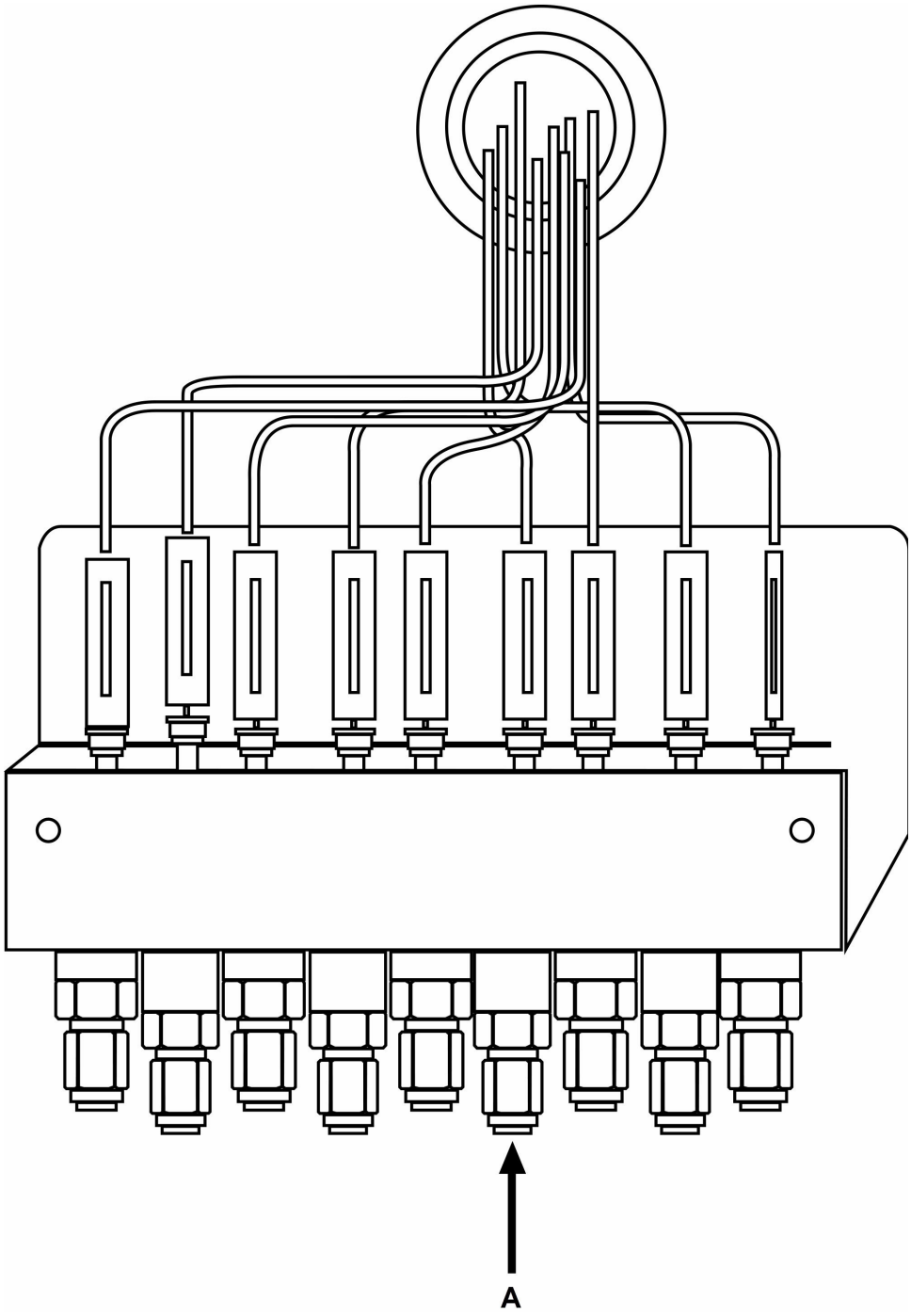

A. Calibration gas connector

Procedure

1. Regulate the calibration gas from bottle pressure to 15 psig (1 BarG) using a two-stage bottle regulator with stainless steel diaphragms. Use a dual-stage regulator to ensure the outlet pressure will not change with changes in the bottle pressure.

   Use stainless steel diaphragms to avoid contamination.

2. Use ⅛-in. (3.2 mm) stainless steel tubing that is clean and free of grease to connect from the calibration gas bottle regulator to the calibration gas inlet connection on the sample conditioning system.
3. Before making the final connection to the sample conditioning system (SCS), blow through the lines for 30 seconds to remove any contamination, such as water or metal shavings, from cutting the tube.

⚠ WARNING

HIGH PRESSURE

High pressure may damage the analyzer and cause an unsafe condition.

Do not allow the calibration gas pressure to rise above 30 psig (2.1 BarG).

3.8 Connect to the sample gas

The sample handling system controls how the gas sample is extracted, conditioned, and transported to the analyzer and is critical to the accurate and reliable performance of any gas chromatograph.

The basic principles of sample handling are as follows:

- Take a representative vapor sample.
- Control the pressure without causing components to condense.
- Remove particulate and liquid contaminates.
- Transport the sample to the GC while maintaining the composition.

In the typical natural gas application, any liquid or solid contamination in the gas tends to accumulate on the inside pipe walls, even if it is clean and dry gas.

Observe the following guidelines for installing sample lines:

- Line length
  If possible, avoid long sample lines. In case of a long sample line, you can increase flow velocity by increasing the sample pressure and by using bypass flow via a speed loop.
- Sample line tubing material
  Ensure tubing is clean and free of grease.
- Dryers and filters
  - Use small sizes to minimize time lag and prevent back diffusion.
  - Install a minimum of one filter to remove solid particles. Most applications require fine-element filters upstream of the GC. The recommended sampling system includes a 2-micron filter.

— Use ceramic or porous metallic type filters. Do not use cork or felt filters.

Note
Install the probe/regulator first, immediately followed by the coalescing filter and then the membrane filter.

- Pressure regulators and flow controllers
  — Use stainless steel wetted materials.
  — Make sure regulators and controllers are rated for sample pressure and temperature.
- Pipe threads and dressings
  Use PTFE tape. Do not use pipe thread compounds (dope).
- Valving
  — Install a block valve downstream of sample takeoff point for maintenance and shutdown.
  — Block valve should be needle valve or cock valve type, of proper material and packing, and rated for process line pressure.

Procedure

1. To take a representative sample of the flowing gas, insert a sample probe into the center third of the pipeline.

   A major flow disturbance in the pipe, such as an elbow fitting or an orifice fitting, causes the contaminants to be temporarily mixed with the flowing gas stream; therefore, if practical, place the probe greater than five pipe diameters from such a flow disturbance to reduce the amount of contaminants that may be extracted with the gas sample.

2. Once the sample is extracted, pass the gas through both particulate and liquid filters to remove any remaining contaminants before it enters the gas chromatograph.

   Figure 3-10 shows the sample gas connection on the tubing bulkhead.

Figure 3-10: Sample Gas Connectors

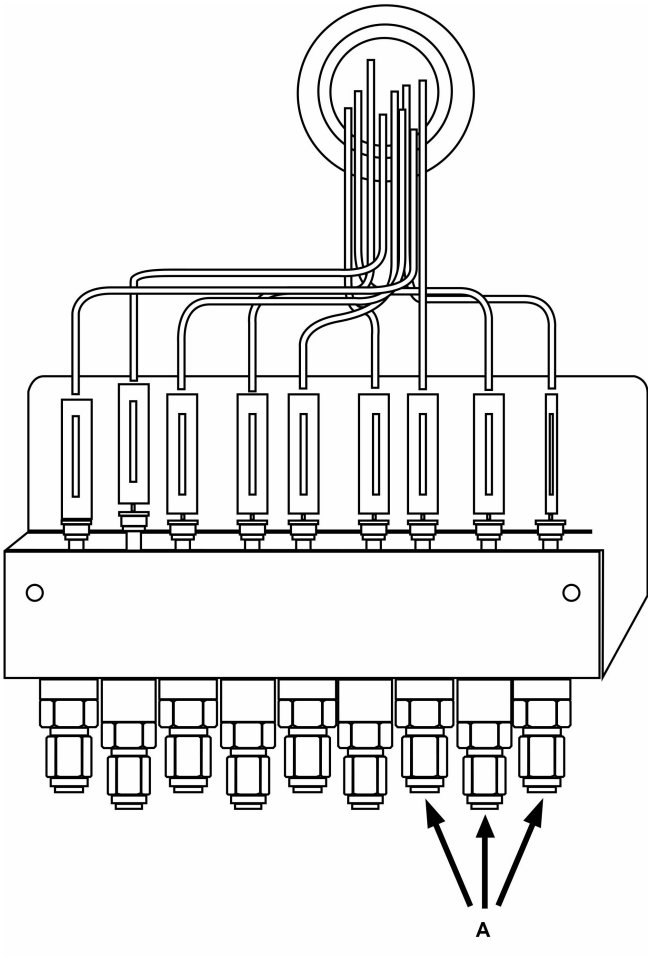

A. Sample gas connectors

3. The sample pressure entering the gas chromatograph sample conditioning system should be between 15 and 30 psig (1 and 2.1 BarG). If the pressure in the pipeline is higher than this, regulate the sample pressure to this pressure with a dual stage regulator. Regulate pressure immediately after the probe or combine it with the probe (a regulator probe), because any extended lengths of sample line before the pressure regulator add significant lag time, which is the time taken for the sample entering the probe to reach the analyzer oven.

Note

When the pressure of a gas is reduced, the temperature of the gas decreases. If you reduce the temperature below the sample's hydrocarbon dew point, the heavier hydrocarbons begin to condense and be removed from the gas phase, which changes the composition of the gas. The analyzed sample no longer accurately represents the flowing gas stream.

4. To avoid this hydrocarbon condensation, heat the regulator and sample lines to the gas chromatograph to at least 30 °F (17 °C) above the expected temperature of the flowing gas stream.
5. Use stainless steel tubing and fittings for all of the sample lines. Use PTFE tape when making threaded connections in the sample system.

   Do not use pipe thread compounds.
6. Once the sample is extracted, pass the gas through both a 2-micron particulate filter and a liquid filter/shut-off to remove any remaining contaminants before it enters the gas chromatograph.

⚠ CAUTION

EQUIPMENT DAMAGE

If the sample system does not contain a 2-micron filter and a liquid filter/shut-off, the GC's warranty may be void if it is determined the failure is due to contamination.

Note
All sample conditioning systems sold with the Rosemount 370XA include a 2-micron filter for each stream; you can also purchase a liquid filter/shut-off separately for each stream.

3.9 Electrical connections

⚠ WARNING

WIRING

It is the customer's responsibility to ensure that all wiring conforms to the local electrical codes or regulations.

The Rosemount 370XA has three cable entries for wiring. If you intend to run the power and communications cables through a single entry, the lower left entry is the most convenient. If you intend to run the power and communication cables separately, the lower left entry is most convenient for the power wiring, and the lower right entry is most convenient for the communication wiring. You can use the upper right cable entry if there is not enough space to run all of the wiring through the two lower cable entries.

The cable entries are M32-threaded connections. If your gas chromatograph is CSA-certified, then Emerson will ship a certified M32-to-¾-inch conduit adapter and ¾-inch certified plugs with your GC. If your gas chromatograph is ATEX/IECeX-certified, then Emerson will ship M32-certified plugs with your GC.

The maximum wire size for all of the GC's terminals is 12 AWG or 4 mm^2. You can unplug the terminals from the backplane to make the connection and then plug them back into place.

⚠ WARNING

ELECTRICAL HAZARD

Shock, fire, or explosion may occur where electricity is the source of ignition in a potentially flammable or explosive atmosphere. Failure to de-energize the GC and not using proper personal protective equipment (PPE) may cause injury to personnel or damage equipment.

Make all electrical connections with no power applied.

3.9.1 Terminal wiring diagram

Figure 3-11: Terminal Board Wiring Diagram

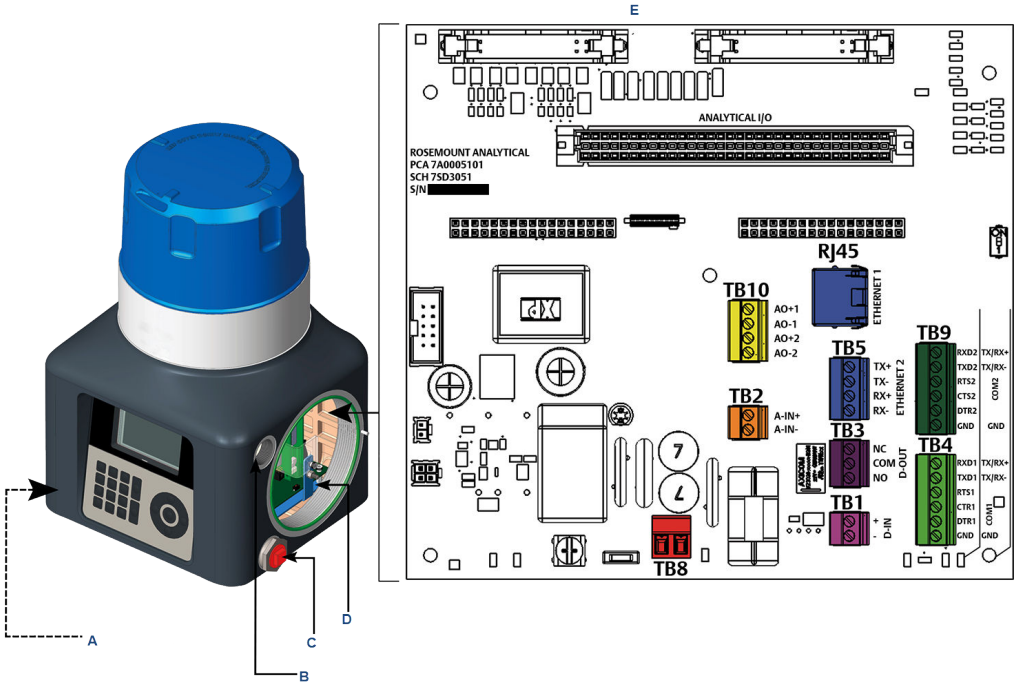

A. Lower left cable entry
B. Upper right cable entry
C. Lower right cable entry
D. Access to terminals
E. Terminal board

Table 3-4: Terminal Board Map Key

Terminal block number	Connects to	Image
TB1	Digital input	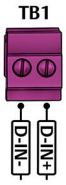
TB2	Analog input	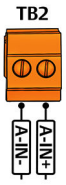
TB4	COM1 port (RS-232)	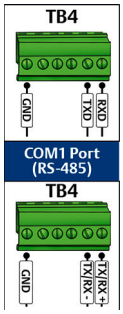
TB5	Ethernet 2	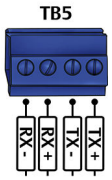
TB8	Power	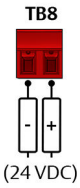

Table 3-4: Terminal Board Map Key *(continued)*

Terminal block number	Connects to	Image
TB9	COM2 port (RS-232)	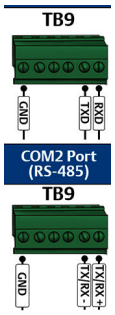
TB10	Analog outputs (2)	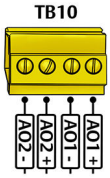

3.10 Connect to serial ports

The Rosemount 370XA has two serial ports on the backplane that can be individually configured for RS-232 or RS-485 mode using the local operator interface or MON2020. The cables for the serial communications should be individually shielded pairs with the shield connected to a clean electrical earth at one end only.

Figure 3-12: Backplane Serial Ports

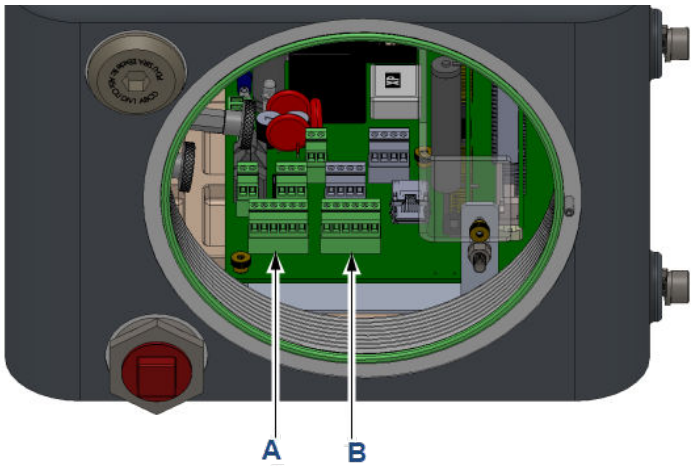

A. COM1

- *Modes: RS-232 and RS-485*
- *Backplane location: TB4*
- *Supported Modbus® formats: ASCII and RTU*

B. COM2

- *Modes: RS-232 and RS-485*
- *Back plane location: TB9*
- *Supported Modbus formats: ASCII and RTU*

3.10.1 Wiring

Figure 3-13: RS-232 Wiring Diagram

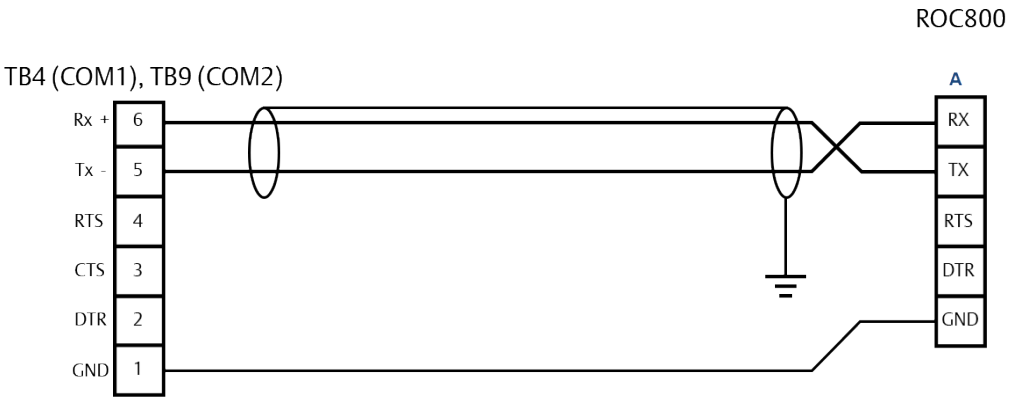

A. Serial port

- The RS-232 protocol requires a three-wire connection, including a ground and does not support multi-drop.
- Individually shield the communication pair with the shield connected at one end only.
- There is no need to connect the RTS, CTS, or DTR terminals in most applications.
- The maximum recommended distance for reliable communications with RS-232 is 50 ft. (15 m)

Figure 3-14: RS-485 Wiring Diagram

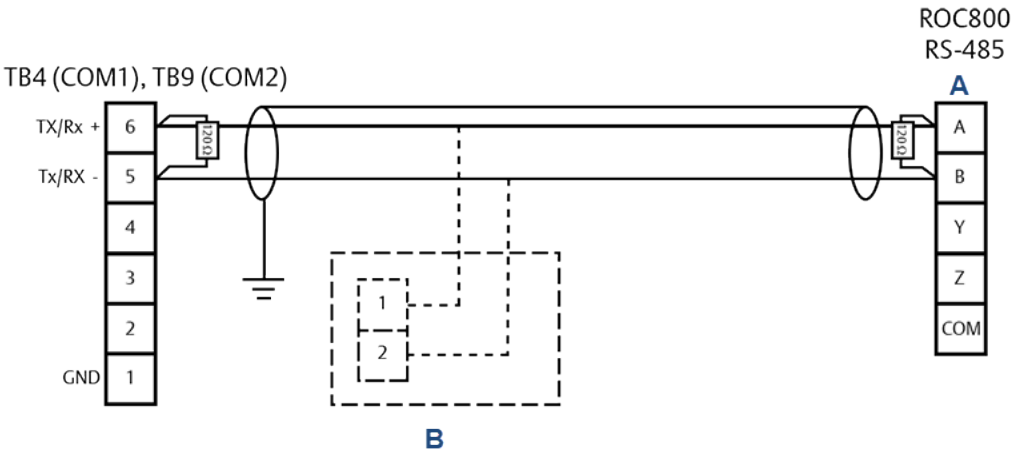

A. Serial port
B. Multi-dropped RS-485 device

Note
The terminating resistors shown in Figure 3-14 are not required for most installations but may help in reducing communication errors for long distance or multi-dropped applications.

- The RS-485 protocol is suitable for longer distance communications and also allows multi-dropped communication to multiple devices.
- For long distance RS-485 communications, wire 100 ohm to 120 ohm terminating resistors in parallel to the two endpoint terminals.
- If the GC is connected with multiple devices on an RS-485 link, only install terminating resistors at the two end points.

3.10.2 Connect directly to a personal computer (PC) using the gas chromatograph's (GC's) serial port

The GC's serial port at J23 on the backplane allows a PC with the same type of port to connect directly to the GC. This is a useful feature for a GC that is located in an area without Internet access; all that is needed is a PC running Microsoft Windows®, a notebook computer, and a straight-through serial cable.

To set up the PC for the direct connection:

Procedure

1. Install the communications cable between two computers:
   a) Navigate to **Start** → **Control Panel** and select the **Phones and Modem Options** icon.
   The ***Phones and Modem Options*** dialog window displays.
   b) Select the ***Modem*** tab and click **Add...**.
   The ***Add Hardware Wizard*** displays.
   c) Select the **Don't detect my modem; I will select it from a list** check box and then click **Next**.
   d) Click **Have Disk**.
   The ***Install from Disk*** dialog window appears.
   e) Click **Browse**
   The ***Browse*** dialog window displays.
   f) Navigate to the Rosemount MON2020 install directory (typically *C:\Program Files (x86)\Emerson Process Management\MON2020*) and select **Emerson Direct Connection.inf**.
   g) Click **Open**.
   You return to the ***Install from Disk*** dialog window.
   h) Click **OK**.
   You return to the ***Add Hardware Wizard***.
   i) Click **Next**.
   j) Select an available serial port and click **Next**.

The ***Hardware Installation*** dialog window displays.

k) Click **Continue Anyway**.
After the driver is installed, you return to the ***Add Hardware Wizard***.

l) Click **Finish**.
You return to the ***Phones and Modems*** dialog window. The **Emerson Direct Connect** modem should be listed in the ***Modem*** column.

2. Start Rosemount MON2020 and do the following to create a GC connection for the Emerson Direct Connection modem:
   a) Go to **File** → **GC Directory...**.
   The ***GC Directory*** window displays.
   b) Select **Add** from the ***GC Directory*** window's ***File*** menu.
   A New GC row is added to the bottom of the table.
   c) Select the *New GC* text and type a new name for the GC connection.
   d) Select the new GC's **Direct** check box.
   e) Click the **Direct** button located at the bottom of the ***GC Directory*** window.
   The ***Direct Connection Properties*** window displays.
   f) Select **Communications cable between two computers** (COM *n*) from the ***Port*** dropdown menu.

   Note
   The letter *n* stands for the COM port number.

   g) Select **57600** from the ***Baud Rate*** dropdown menu.
   h) Click **OK** to save the settings.
   You return to the ***GC Directory*** window.
   i) Click **OK** to save the new GC connection and to close the ***GC Directory*** window.
3. Connect one end of the direct connect cable to the GC's serial port at **J23** on the backplane.
4. Connect the other end of the direct connect cable to the PC's corresponding serial port.
5. Go to **Chromatograph** → **Connect...**.
   The ***Connect to GC*** window displays.
6. Click **Direct** to connect to the GC using the serial cable connection.

3.11 Connect to Ethernet ports

Figure 3-15: Ethernet Ports on the Backplane

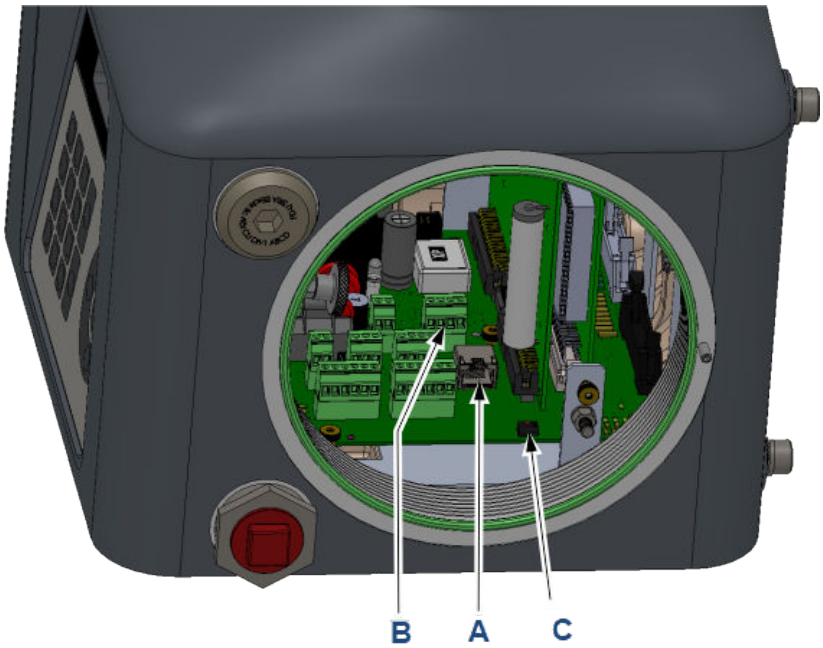

A. *Ethernet 1*
   - *Backplane location: J9*
   - *Terminal type: RJ-45, DHCP-enabled*

B. *Ethernet 2*
   - *Backplane location: TB5*
   - *Terminal type: Wired*

C. *DHCP switch*
   - *Back plane location: SW1*

The Rosemount 370XA has two Ethernet ports that can be configured with unique IP addresses, subnet masks, and gateway addresses.

- Ethernet 1 is an RJ-45 connector designed to accept common Ethernet cable connections found on computers and other Ethernet enabled devices and is primarily intended for local connection to a computer, but can also be permanently connected to other Ethernet devices.
- Ethernet port 2 is a field terminated port primarily intended for connection to supervisory systems or other Ethernet enabled devices.
- Both ports can be used for Modbus® TCP communication and communication to the MON2020 configuration and diagnostics software.

Note
You can establish up to 10 simultaneous Modbus TCP connections from the Modbus master. Connections attempts made after the tenth connection will be ignored.

3.11.1 Ethernet 1 port

Ethernet 1 was designed primarily for local connection to a computer, such as a technician's laptop, for occasional maintenance and diagnostic purposes. The connector is the same RJ-45 Ethernet connector commonly found on most Internet-capable devices.

The RJ-45 port has a DHCP server that will automatically assign an Internet Protocol (IP) address to a computer when it is connected to the port. The default DHCP server IP address is 192.168.135.100. There is a switch at SW1 on the back plane that turns the server on and off.

Note
If your computer is not configured to automatically configure Ethernet settings, contact your IT department for instructions on how to change your IP settings to an address in the same range as the Ethernet subnet on the GC or to obtain an IP address and subnet for the GC that will work with your computer's settings.

If wiring Ethernet 1 to other Ethernet-enabled devices, such as a router, hub, or local area network, then set the DHCP server switch to OFF to ensure that the operation of the network is not affected.

3.11.2 Ethernet 2 port

Figure 3-16: Ethernet 2 Port on the Backplane

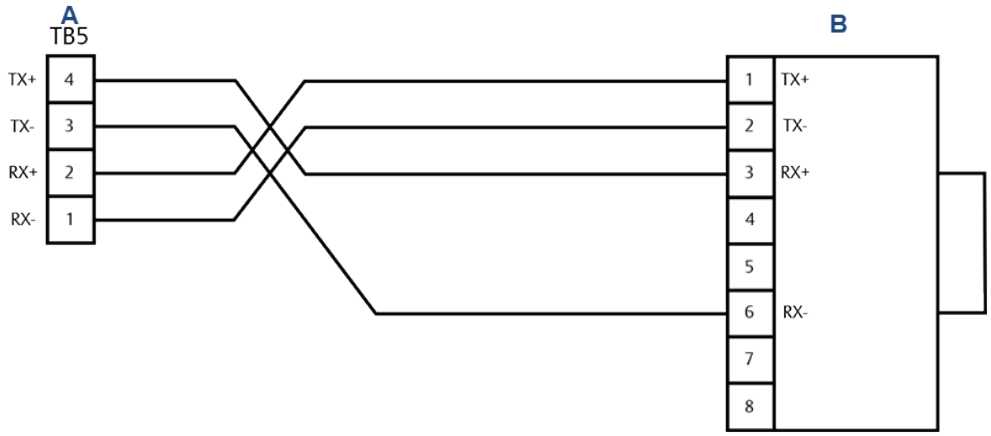

A. Ethernet port 2
B. Ethernet device

The second Ethernet port is intended to be connected to an Ethernet-enabled supervisory network such as a flow computer, Supervisory Control and Data Acquisition (SCADA) system, or Distributed Control System (DCS). You can also use this port to permanently connect to a maintenance network with MON2020.

As this port is intended for connection to hard wired Ethernet networks, the IP address, you must configure the subnet, and the gateway address appropriately for the network connection. Consult with your network administrator for the required settings.

3.12 Connect to external devices

Figure 3-17: Digital and Analog Device Connections

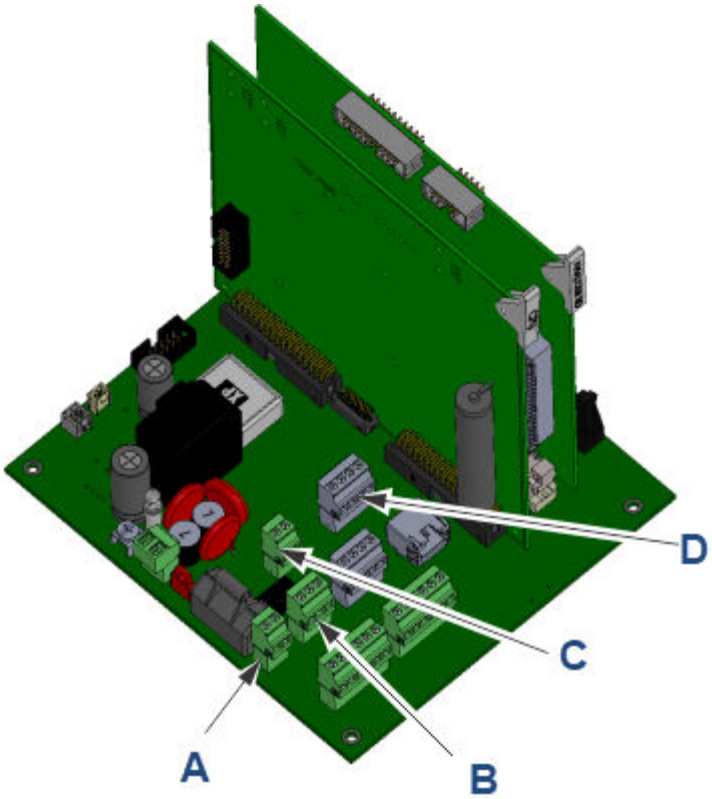

A. *Digital input (TB1)*
B. *Digital output (TB3)*
C. *Analog input (TB2)*
D. *Two analog outputs (TB10)*

3.12.1 Digital inputs

You can configure the discrete digital input to trigger alarms, change the stream sequence, or perform other functions. The input is optically isolated and can accept either a contact closure such as a pressure switch or a DC voltage signal between 5 and 30 Vdc at 1 Amp.

Figure 3-18: Wiring for a Digital Input Connected to a Contact Closure Device

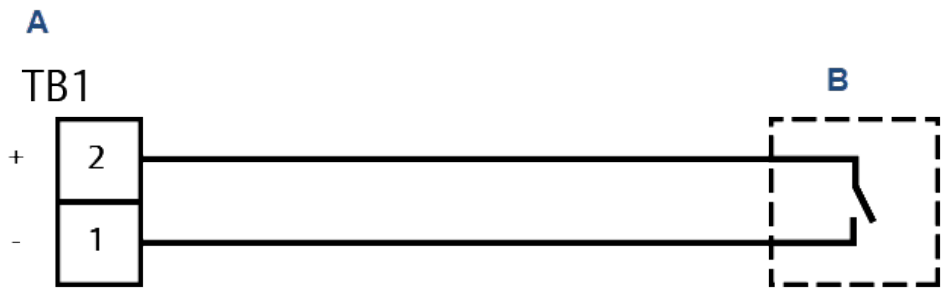

A. Rosemount 370XA digital input
B. External device contact closure

Figure 3-19: Wiring for a Digital Input Connected to a Voltage Output Device such as a Flow Computer

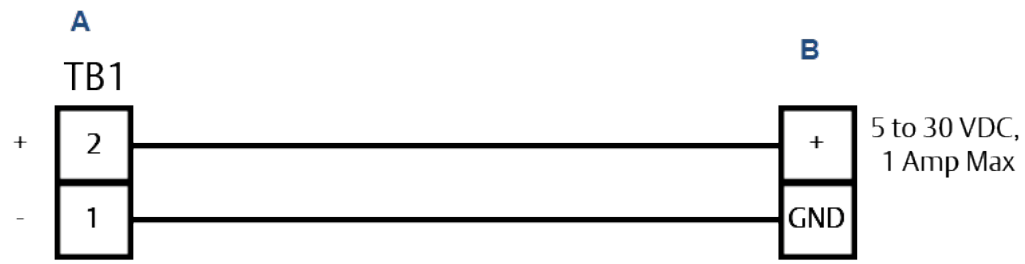

A. Rosemount 370XA digital input
B. External device voltage output

3.12.2 Digital output

The digital output is a Form C dry contact relay output with normally open and normally closed contacts. The output is typically configured as an alarm output, but can be configured for other purposes. When using the digital output as an alarm output, it is important to configure the circuit for fail-safe operation, which means that the “normally open” contact should be used and configured so that a power failure will raise an alarm in the connected device.

Figure 3-20: Wiring for a Digital Output for a Fail-Safe Mode

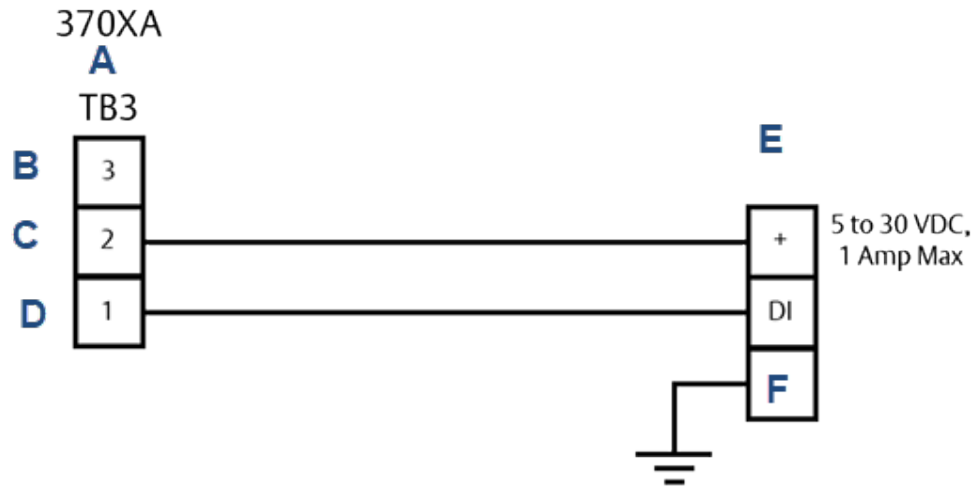

A. Digital output
B. Normally closed
C. Common
D. Normally open
E. External device voltage output
F. Ground

3.12.3 Analog input

You can use the analog input to monitor and generate an alarm from an external signal, such as a pressure transmitter on the carrier gas bottles or as a composition component input from another analyzer, such as a moisture or H_2S analyzer. The analog input is optically isolated and requires external loop power.

Figure 3-21: Analog Input Wiring with an External Power Supply and a Loop Powered Transmitter

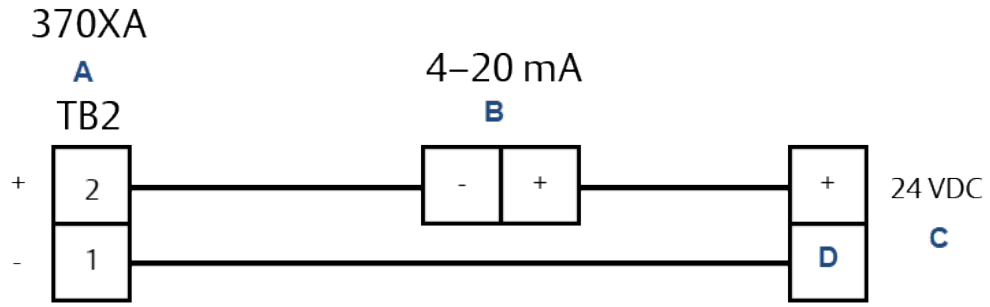

A. Analog input
B. Transmitter
C. Power supply
D. Ground

3.12.4 Analog outputs

The Rosemount 370XA has two analog outputs. Each analog output can be used to transmit a GC variable, such as an energy value or a component concentration, as a 4 to 20 mA signal. The outputs are self-powered and require a loop resistance of less than 500 ohms.

Figure 3-22: Analog Output Connected to an ROC800 Analog Input Card

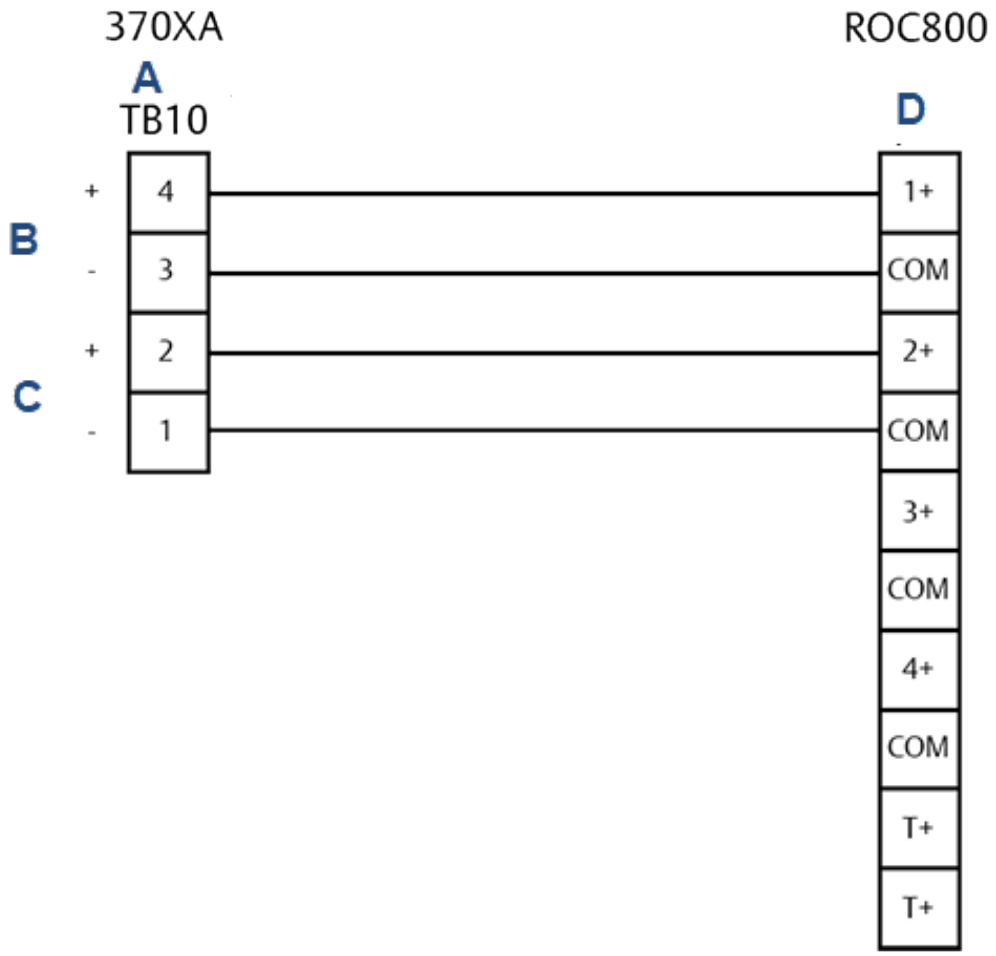

A. Analog outputs
B. Analog output 1
C. Analog output 2
D. Analog inputs

3.13 Connect to power

Figure 3-23: 24 Vdc Power Source Wiring

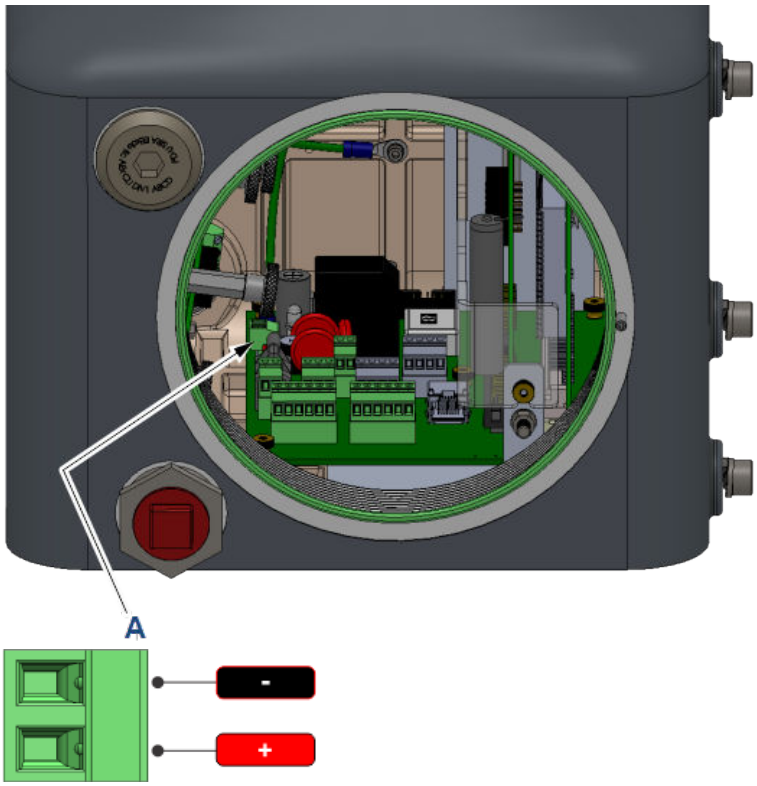

A. 24 Vdc power wiring input

3.13.1 Wiring power source

- Ensure that all wiring, as well as circuit breaker or power disconnect switch locations, conform to all the standards: national, local, state, and other jurisdictions.
- Provide the gas chromatograph (GC) with a 5-amp circuit breaker for protection.
- The Rosemount 370XA requires at least 21 Vdc at the terminals on the back plane to operate correctly. When wiring for DC power connections, account for the voltage drop due to the cable's resistance.

Table 3-5 and Table 3-6 estimate the voltage drop and the maximum length of cable with a 24 Vdc supply at the maximum power draw (55 W) while the analytical oven heats up during start-up.

Table 3-5: American Wire Gauge (AWG)

	12	14	16
Resistance per 1000 feet (in ohms)	1.62	2.58	4.08
Voltage drop per 1000 feet at 2.5 A (in Vdc)	4.05	6.44	10.21
Maximum length (3 Vdc power drop) in feet	740	465	293

Table 3-6: Metric Wire Size

	2.5	1.5
Resistance per 100 m (in Ohms)	1.3	2.1
Voltage drop at 100 m at 2.5 A (in Vdc)	3.25	5.25
Maximum length (3 Vdc power drop) in meters	92	57

3.13.2 Grounding precautions

Follow these general precautions for grounding electrical and signal lines:

- Metal conduit used for process signal wiring must be grounded at conduit support points (intermittent grounding of conduit helps prevent induction of magnetic loops between the conduit and cable shielding).
- A single-point ground must be connected to a copper-clad, 10-ft. long, ¾-in. diameter (3 m long, 19.1 mm diameter) steel rod, which is buried, full-length, vertically into the soil as close to the equipment as is practical.

  Note
  The grounding rod is not furnished.

- Resistance between the copper-clad steel ground rod and the earth ground must not exceed 25 Ohms.
- On ATEX-certified units, the external ground lug must be connected to the customer's protective ground system via 9 AWG (6 mm^2) ground wire. After the connection is made, apply a non-acidic grease to the surface of the external ground lug to prevent corrosion.

Figure 3-24: Grounding Lug

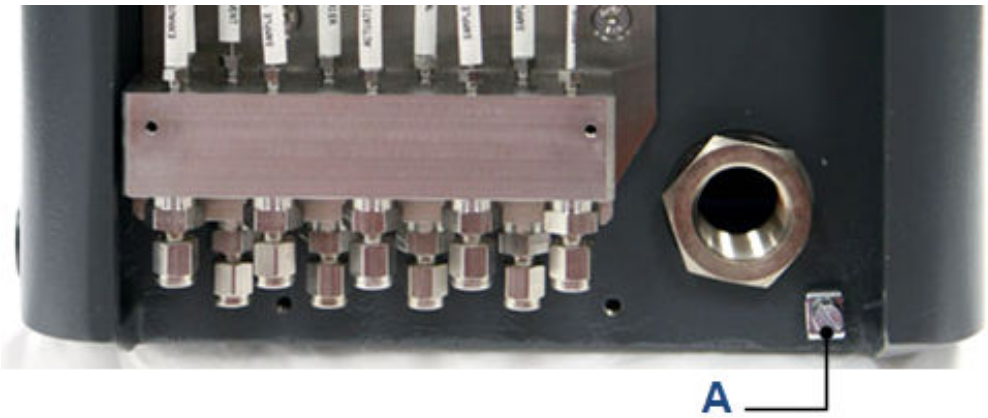

A. Ground lug

- The equipment-grounding conductors used between the gas chromatograph (GC) and the copper-clad steel ground rod must be sized according to your local regulations.

3.14 Start up and configure the gas chromatograph

3.14.1 Apply carrier and actuation gas

If the carrier gas and actuation gas are the same supply, start them together.

If using a separate actuation gas supply, apply pressure and leak check the actuation gas first and then repeat for the carrier gas.

⚠ CAUTION

Applying carrier gas without actuation gas can result in a direct path of the carrier gas to the vent that rapidly uses up the carrier gas supply.

Procedure

1. Back off the bottle regulator so that when the bottle valve is opened, there will be no pressure applied.
2. Open the bottle valve.
3. Slowly increase the regulated pressure to 80-90 psig (5.5-6.2 Bar).
4. Leak check the lines from the bottle to the GC.

3.14.2 Apply calibration gas

Procedure

1. Close the calibration gas isolation valve on the sample handling system.

2. Back off the bottle regulator so that when the bottle valve is opened, there will be no pressure applied.
3. Open the bottle valve.
4. Slowly increase the regulated pressure to 15 psig (1 BarG).
5. Leak check the lines from the bottle to the GC.

Note
Do not open the isolation valve to the calibration gas yet. This will be done during the start-up of the GC.

3.14.3 Apply sample gas

Perform the following procedure for each sample line.

Procedure

1. Close the sample isolation valve on the sample handling system.
2. Back off the sample regulator so that when the sample point isolation valve is opened, there will be no pressure applied.
3. Open the sample point isolation valve.
4. Slowly increase the regulated pressure to 15 psi (100 kPa).
5. Leak check the lines from the bottle to the GC.

Note
Do not open the isolation valve to the calibration gas yet. This will be done during the startup of the GC.

3.14.4 Turning on power for the first time

At this point, actuation gas and carrier gas should be flowing through the GC. The GC can take up to four hours to heat up to temperature, during which time the software settings can be configured and the system purged.

Procedure

1. Turn on the power supply to the GC. The local operator interface (LOI) ***Bootup*** screen displays.

   The bootup process takes less than three minutes.

   When the ***Home*** screen displays, bootup is complete.
2. Wait fifteen minutes.

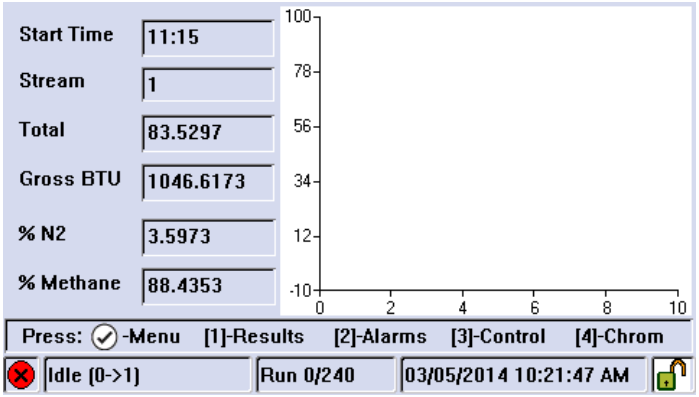

A red alarm icon should be visible in the lower left corner of the *Home* screen.

3. Press **2** on the keypad to open the *Alarms* screen.

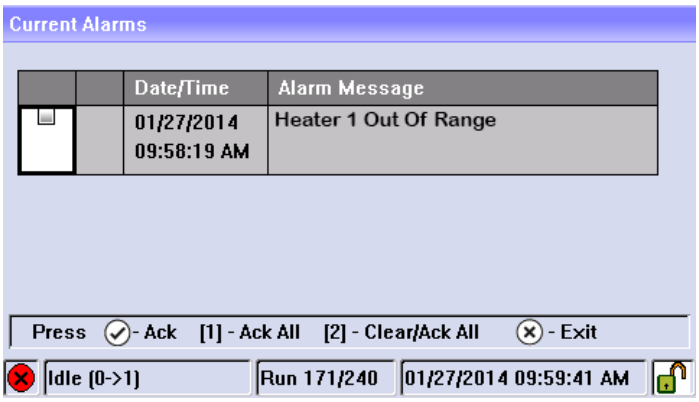

Note
You may be required to log in first. The default login values are:

User: emerson

Password: [blank]

4. Confirm that the alarm that was triggered was the **Heater 1 Out Of Range** alarm.

   Other possible alarms are the **GC Idle** alarm, **Carrier Pressure Low** alarm, and the **Power Failure** alarm.

Note
If the *Current Alarms* screen displays the **Carrier Pressure Low** alarm, confirm that the carrier gas supply is on and that the pressure regulator is set to 80-90 psig (5.5-6.2 Bar). If the alarm persists, see Troubleshooting. Because this is the first time that the GC has been turned on, you can ignore the other alarms.

5. Press **2** to acknowledge and clear the alarm.

Note
The **Heater 1 Out Of Range** alarm will reappear every fifteen minutes until the GC reaches its temperature setpoint. Continue to press **2** as necessary.

6. Press **Exit** to return to the ***Home*** screen.

3.14.5 Startup assistant

Procedure

1. Press **Enter** to go to the ***Main Menu***.
2. Press **Right** to move to the ***Tools*** menu.
3. Press **Down** to move to the **GC Startup** command and press **Enter**.
   The ***GC Startup*** screen displays.

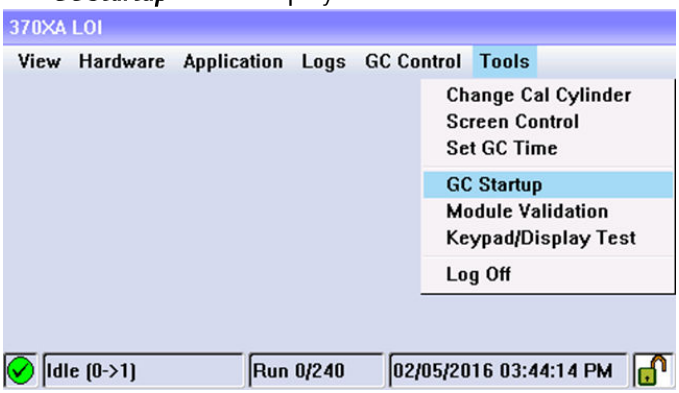

4. Press **Enter** to continue.
5. To set gas pressures:
   a) Confirm all the gas lines are connected and all valves are open.
   b) Confirm the carrier, actuation, calibration, and sample pressures are set correctly.
   c) Once confirmed, press **Enter** to continue.
6. To enter analyzer information:
   a) Press **Edit** to activate a field.
   b) Use the numeric keys to enter the analyzer name
   c) Press **Enter** to accept an entry and to deactivate the field.
   d) Use the arrow keys to move to the next field.
   e) Repeat the steps for company name, location, and date and time. Press **Enter** to continue.
   f) If your country employs Daylight Savings Time, use MON2020; from the ***Chromatograph*** menu, select **View/Set Date Time**, and select the **Day Light Savings** checkbox, which is unselected by default.
7. To configure communications:
   a) Enter the serial port settings.
   b) Once done, press **Enter** to continue and configure the following:

Table 3-7: Communications Settings

Communications type	Configuration description
Modbus ID	The address that the host device will use to communicate with the GC. For applications where the GC is the only slave device on the network, the Modbus ID is typically set to **1**. For multi-dropped applications where the GC is one of several on the serial network, the Modbus ID needs to be unique. Refer to your host device configuration to determine the Modbus ID to be configured on the GC.
Baud rate	The baud rate can be set at the standard rates from 1,200 baud up to 57,600. For Modbus® communications, the typical setting is **9,600**.
Data/stop bits	The number of bits used for communications and to indicate the end of a message. The typical setting for ASCII mode communications is **7**. The typical setting for RTU mode communications is **8**. Typically, Stop bit is set to **1**.
Parity	The error checking mode for the parity bit in ASCII mode messages. This can be set to either **ODD** or **EVEN** for ASCII mode communications and must match the host device's settings. Set to **NONE** for RTU mode communications.
MAP file	The Modbus address map. By default, this is set to **SIM_2251**, which is a pre-configured map that is the most common communication mapping for flow computer to GC communications. Refer to the MON2020 Manual to learn more about configuring custom maps.
Port	The selection between RS-232 and RS-485 physical layer communication protocol.

Note
The Rosemount 370XA does not have a setting for ASCII or RTU mode. The GC automatically detects the mode during its initial communications with the host device and automatically selects the correct mode.

Note
Obtain the required serial port settings prior to configuring the settings on the GC.

8. Configure TCP/IP settings. Make a note of the Ethernet settings for both ports.

   Ethernet 1 is the RJ-45 terminal that is commonly used for local computer access. Ethernet 2 is the port that is commonly used for communication with a supervisory system such as a flow computer, remote terminal unit (RTU), SCADA, or DCS.

   a) Enter the Ethernet settings according to the network requirements of your installation. Press **Enter** to continue.

   b) If you intend to use Ethernet 1 for local access only, do not change the settings. Contact your network administrator or the person in charge of configuring your supervisory system network for the setting required to connect the GC to your network.

9. Reset averages time. Enter the day of the month to reset the monthly averages in the Day column.

   a) Enter the time to reset the daily averages in the Reset Time column.

   b) Enter the time to reset the weekly averages in the Weekday column.

c) Press **Enter** to continue.

10. Configure calculations. You can configure the Rosemount 370XA to perform GPA calculations, ISO calculations, or both. Enter the calculation settings. Once done, press **Enter** to continue.

    a) Calculation Method. Options are **GPA**, **ISO**, or **GPA & ISO**.

    b) ISO Version (Only if **ISO** or **GPA & ISO** was selected as Calculation Method). Options are **ISO 6976: 2016** and **ISO 6876: 1995**.

    c) Base Pressure Units. Options are **PSIA**, **BarA**, or **kPaA**.

    d) GPA Calculation Units Options are **U.S.** or **S.I.**

    e) GPA Pressure Display (Only if **GPA** or **GPA & ISO** was selected as a Calculation Method).

    If you select **U.S.** units, **PSIG** is the default unit. If you select **S.I.** units, options are **kPaG** or **BarG**.

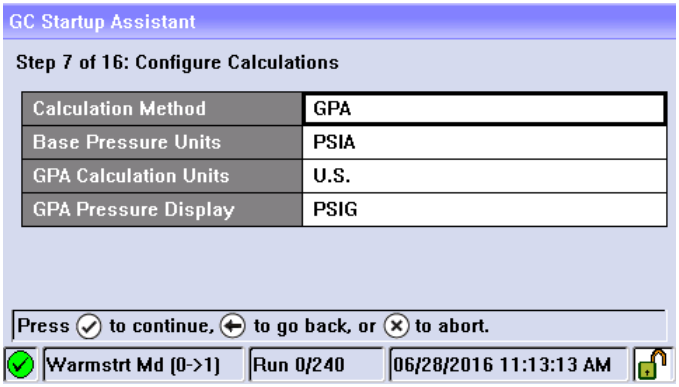

    f) ISO Pressure Display (Only if **ISO** or **GPA & ISO** was selected as Calculation Method). Options are **BarG** or **kPaG**.

    g) Primary and Secondary Temperature (Only if **ISO** or **GPA & ISO** was selected as calculation method. Options are **0C/0C**, **0C/15C**, **0C/20C**, **15C/0C**, **15C/15C**, **15C/20C**, **20C/0C**, **20C/15C**, **20C/20C**, **25C/0C**, **25C/15C**, **25C/20C**, **0C/15.55C**, **15C/15.55C**, **20C/15.55C**, **25C/15.55C**, **15.55C/0C**, **15.55C/15C**, **15.55C/15.55C**, and **15.55/20C**.

h) Primary and Secondary CV Units (Only if **ISO** or **GPA & ISO** was selected as Calculation Method). Options are **kJ/m3**, **kCal/m3**, **kWh/m3**, **MJ/m3**, **MJ**, and **MJ/mole**.

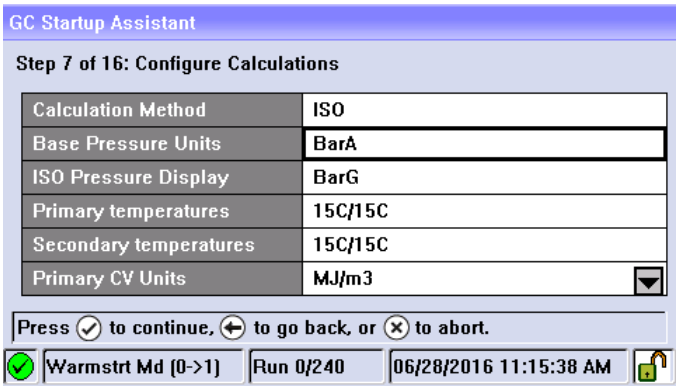

11. Configure stream usage. Designate stream 1, 2, 3, and 4 for **calibration**, **analysis**, or **unused**. For calibration and validation parameters, enter total number of runs, runs to be averaged, and starting times. Once done, press **Enter** to continue.

    a. **Auto**. Check the box to automatically run at designated time. If the box is unchecked, you need to perform a manual calibration or validation. By default, the box is checked for calibration and unchecked for validation.

12. Enter the C6+ splits. The GC assumes a ratio of heavy hydrocarbon components is used for the C6+ value. By default, there are four pre-defined ratios: **C6+ 47/35/17**, **C6+ GPA 2261-99**, **C6+ 57/28/14**, and **C6+ 50/50/0**. There is also a user defined option. Select the desired split and press **Enter** to continue.
13. Purge regulator. Purge the calibration gas regulator five times as instructed and then press **Enter** to continue.
14. Enter cal concentration. Enter the concentration values that are written on the calibration gas's certificate into the appropriate fields. Press **Enter** to continue.

    Note
    If the **Auto Calculate Methane** checkbox is selected, the methane value is calculated based on the values entered in the other fields.

15. Enter Uncertainty %. Enter the uncertainty values from the calibration gas's certificate into the appropriate fields. Press **Enter** to continue.

    Note
    If the calibration gas certificate does not list the uncertainty percentages, enter the default value of **2**.

16. Enter the cal gas energy value. Enter the calibration gas certificate energy value and the energy deviation limit values from the calibration gas's certificate.

Note
If the cal gas energy value from the certificate does not match the calculated value on the screen, enter the calculated value in the Cal Gas Energy Value field to ensure the energy value check during the calibration runs will not cause nuisance alarms.

17. Wait for temperature and pressure to stabilize.
    GC Startup waits until the temperature and pressure of the GC reach their setpoint. Once this happens, the GC Startup moves automatically to the next setup screen.
18. Run cal gas analysis.
    The GC analyzes the calibration gas and repeat the analysis until the nitrogen value repeats within the uncertainty value entered. If after five runs, the nitrogen values are within specified limits, the GC Startup moves automatically to the next setup screen.
19. Run calibration sequence.
    The GC runs the number of calibration cycles as entered during configure stream usage. If alarms are generated, the GC Startup halts until the alarms are cleared.

If no alarms sound, the setup of the Rosemount 370XA is complete.

4 Using the Rosemount 370XA

You can perform many routine maintenance functions directly from the local operator interface (LOI).

In most cases, you can install and configure the GC and place it on the line without using a computer.

4.1 Connect a local computer to the Rosemount 370XA

The **Ethernet 1** port uses a common RJ-45 connector for connections between local devices and includes a dynamic host configuration protocol (DHCP) server that automatically configures the settings of a computer when it connects to Ethernet 1.

Switch on the DHCP server for a local, single-computer connection or switch it off if you intend to connect Ethernet 1 to multiple devices on a local area network (LAN).

Procedure

1. Locate the switch at SW1 (B) on the backplane. It is in front of the RJ-45 Ethernet plug (A). Flip the switch on.
   This activates the GC's DHCP server. The server typically takes 20 seconds to initialize and start up.

Figure 4-1: Backplane Switches and RJ-45 Connector

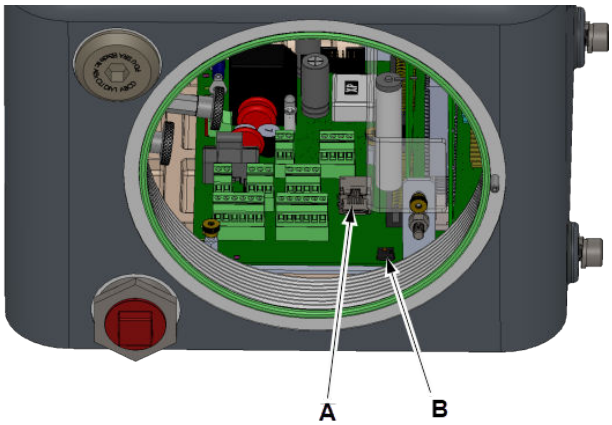

A. RJ-45 Ethernet plug
B. SW1 switch

Note
If you intend to connect the RJ-45 port to a router or switch, ensure the GC's DHCP server is turned off by flipping the SW1 switch to OFF. Connecting to your LAN with the DHCP server on disrupts your local network's functioning.

Note
You can connect the GC (or have it remain connected) to a local network via the wired Ethernet 2 port on the back plane while the DHCP feature is being used.

2. Connect between the GC's RJ-45 connector and the local computer with a standard Cat 5 Ethernet cable.
3. Wait 30 seconds for the computer to update its TCP/IP settings.

Note
If your computer is not configured for dynamic IP addressing (static IP), you will need to configure the GC with a static IP address that is in the same subnet as your computer. Contact your network administrator for these IP settings and enter the required settings into the TCP/IP Settings screen on the GC.

4. Start MON2020.

Note
Refer to our downloads page to download the latest version of MON2020.

5. Select **Connect** on the ***Chromatograph*** menu.
   The ***Connect to GC*** window opens.
6. Click the **Ethernet** button in the Direct-DHCP row.
   The ***Login*** screen opens.
7. Enter your login information and press **OK**.
   The computer connects to the GC. The status bar at the bottom of the MON2020 screen shows the GC name, the alarm status, the mode, and the time and date of the connected GC.

4.2 Interacting with the local operator interface (LOI)

The LOI automatically starts up when the GC is turned on. The LOI displays the ***Startup*** screen, which updates with its start up status. After the firmware has booted up, the LOI will display the ***Home*** screen.

To edit data, you must be logged in at the appropriate security level; if you attempt to edit data without being logged in, the ***Login*** screen will appear.

You will be logged off automatically after a period of 15 minutes of inactivity. The LOI will turn off the backlight and return to the ***Home*** screen.

4.2.1 Menu operation

To view the ***Main Menu*** from the ***Home*** screen, press **Enter** (✓). Use the arrow keys to navigate through the menus.

To exit from the ***Main Menu*** and return to the ***Home*** screen, press **Exit** (✕). If you were logged on when exiting the menu, you will be logged off.

4.2.2 Screen operation

Use the **Up** and **Down** arrow keys to navigate between a screen's fields. Pressing **Down** while focus is on the last field on the screen moves the focus to the first field on the screen; alternatively, pressing **Up** while focus is on the first field on the screen moves the focus to the last field on the screen.

The **Select/Edit** button( ) puts the field currently in focus into Edit mode, unless the focus is on a table, in which case pressing this key allows you to navigate between the table's cells.

If there is no field in edit mode, you can exit that screen in one of two ways:

1. Press **Enter** ( ). If you made any changes to the screen's data, the LOI validates and saves them, while also generating the appropriate event log entries. The LOI then exits the current screen.
2. Press **Exit** ( ). If you made any changes to the screen's data, the LOI discards the changes and exits the current screen.

4.2.3 Entering numeric data

The valid key entries for numeric data are the numbers 1 - 9, the negative sign (-), and the decimal point (.).

The decimal point is only available for floating-point numbers.

- Press to put the numeric field into edit mode.
- Press to validate and save new data.
- Press to cancel changes made and keep the original data.
- Press **Left** to delete the digit immediately to the left of the currently highlighted number.
- Press **Right** to move the cursor to the right one space.

4.2.4 Enter alphanumeric data

To enter a letter into an alphanumeric field, press the appropriate key to cycle through its alphanumeric options until the desired letter appears.

For example, to enter an **H**, press the **4GHI** key three times. The GC also supports lowercase letters. For example, to enter a **b**, press the **2ABC** key six times.

4.3 Local operator interface (LOI) screen descriptions

4.3.1 View menu

Current Alarms screen

Figure 4-2: Current Alarms Screen

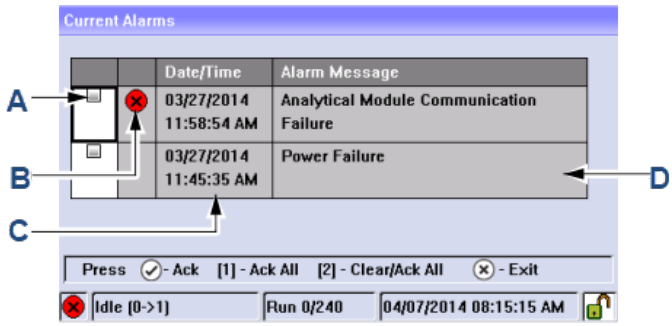

A. *Checkbox: select the alarm's checkbox in order to acknowledge it.*

B. *State: indicates whether the alarm is active ( ), unacknowledged ( ), or inactive (blank).*

C. *Date/Time: indicates the date and time at the GC when the alarm condition occurred.*

D. *Alarm Message: describes the alarm.*

Report Display screen

Figure 4-3: Report Display Screen

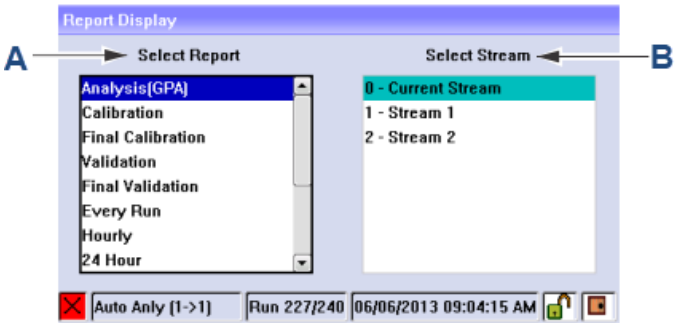

A. *Select Report*
Lists the report types that can be generated and displayed by the local operator interface (LOI).

B. *Select Stream*
Select the stream that was analyzed.

Report Viewer screen

This window displays after you select a report type from the ***Report Display*** screen. This screen's content is dependent upon the type of report selected.

Figure 4-4: Report Viewer Screen

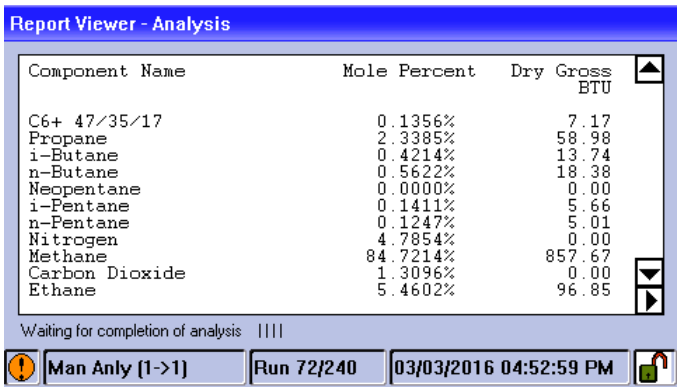

Chromatogram screens

Figure 4-5: Select Chromatogram Screen

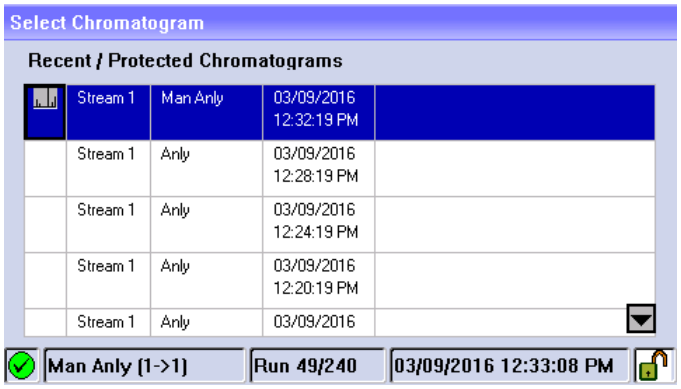

The *CGM Viewer* screen displays when you select **Chromatogram** from the *View* menu.

Figure 4-6: Chromatogram Viewer - Live CGM

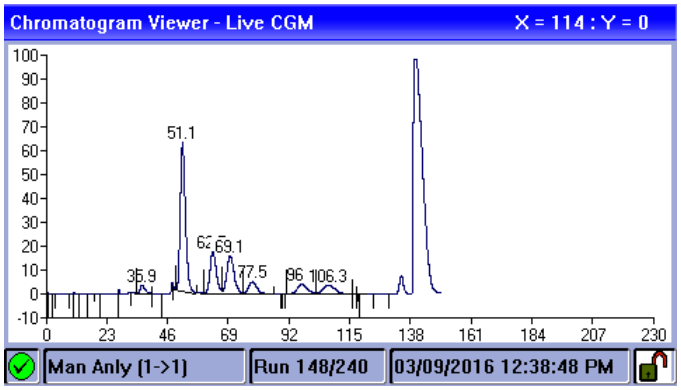

Status Display screen

Description: The GC parameter that is being monitored. You can change this with MON2020's ***LOI Status Variables*** screen.

Value: The GC parameter's current value.

4.3.2 Hardware menu

Heaters screen

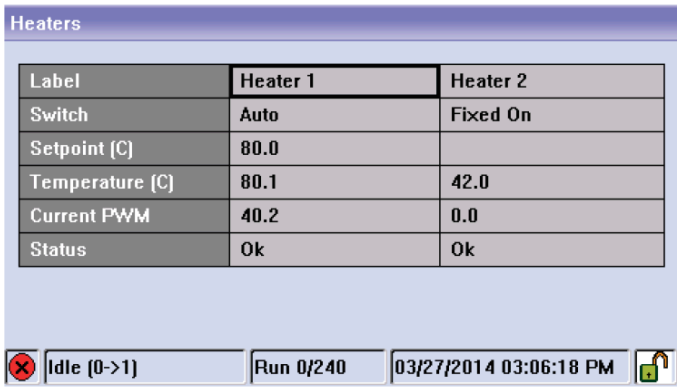

Label	Heater 1	Heater 2
Switch	Auto	Fixed On
Setpoint (C)	80.0	
Temperature (C)	80.1	42.0
Current PWM	40.2	0.0
Status	Ok	Ok

Label: The heater's name. You can change this with MON2020.

Switch: Indicates the state of the heater:

- Auto: The heater is controlled by the GC.
- Fixed On: The heater is controlled manually, through user input.
- Not used: The heater is shut off.

You can change the switch state with MON2020

Setpoint (C): Indicates the target temperature. You can change the setpoint and the unit of measurement (Celsius or Farenheit) with MON2020.

Temperature (C): Indicates the current temperature.

Current PWM: Indicates the current percentage of power being provided to the heater.

Status: Indicates the operational state of the heater.

- OK: The heater's control card is installed and is working correctly.
- Not installed: The heater is not installed.
- Out of Range: The heater is running but the temperature is not within control limits.
- Error: The GC cannot communicate with the heater.

Valves screen

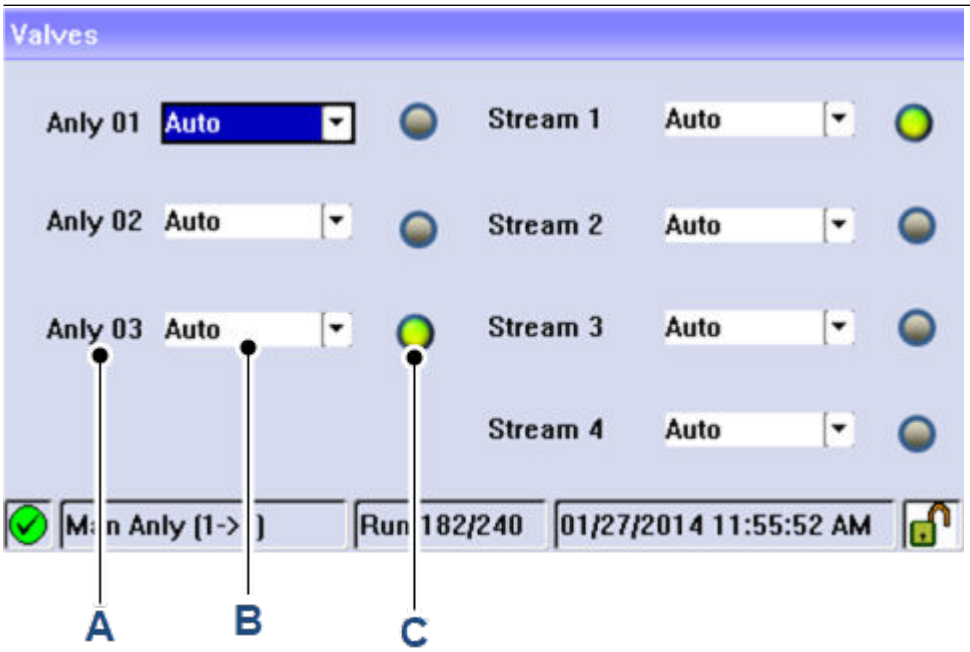

A. *Label*
The name of the valve as set in MON2020.

B. *Mode*
There are three modes:

- *Auto - The valve's on or off state is controlled by the GC.*
- *Off*
- *On*

The operator can also set the mode.

C. *Status icon*
Green means that the valve is on, or active; gray means the valve is off, or inactive.

EPC screen

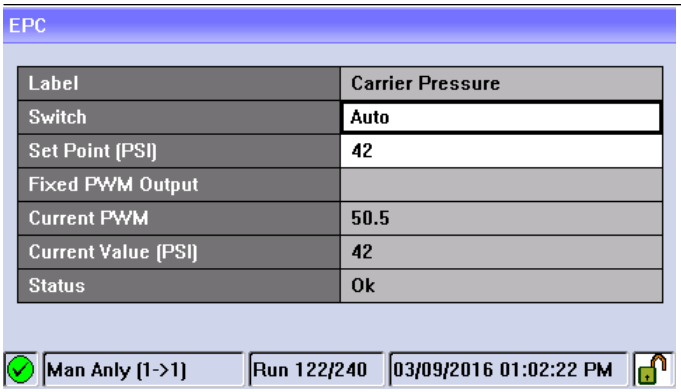

Label: The name of the EPC as set in MON2020.

Switch

- Auto: The EPC is controlled by the GC.
- Fixed On: The EPC is controlled manually, through user input.
- Not used: The EPC is shut off.

Set Point: Indicates the target pressure.

Fixed PWM Output: The desired percentage of power to provide to the EPC.

Current PWM: Indicates the current percentage of power being provided to the EPC.

Current Value: The current pressure.

Status: Indicates the operational state of the EPC.

- OK: The EPC is installed and is working correctly.
- If not OK, provides the alarm message.

Discrete Inputs screen

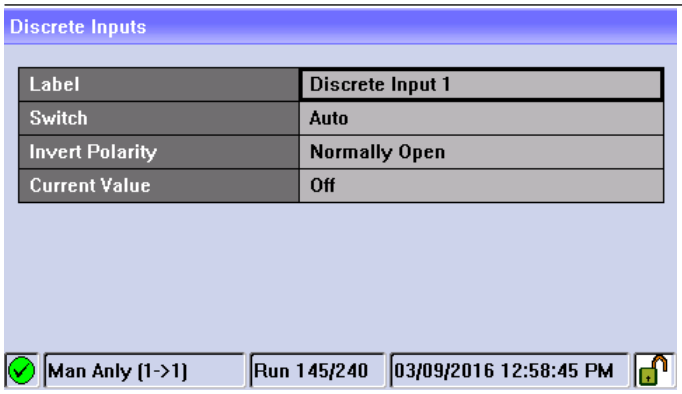

Label: The name of the discrete input as set in MON2020.

Switch: Indicates the discrete input's operational mode. There are three modes:

- Auto - The GC controls the discrete input's off or on state.
- Off
- On

The operator can set the mode.

Invert Polarity: The **Invert Polarity** option reverses the way a voltage signal is interpreted by the discrete input. By default, the **Invert Polarity** option is set to **Normally Open**, which means that a low voltage signal is interpreted by the discrete input as **ON**, and a high voltage signal is interpreted by the discrete input as **OFF**. Setting **Invert Polarity** to **Normally Closed** means that a low voltage signal is interpreted by the discrete input as **OFF**, and a high voltage signal is interpreted by the discrete input as **ON**.

You can change this option with MON2020.

Current Value: Indicates the current state of the discrete input. Options are **On** and **Off**.

Discrete Outputs screen

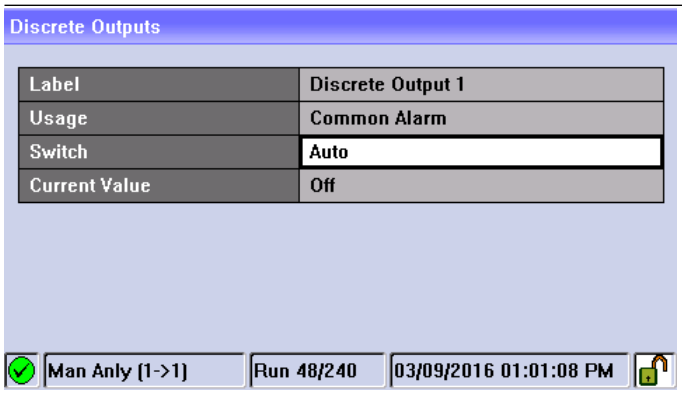

Label: The name of the discrete output as set in MON2020.

Usage: A discrete output's usage mode determines which signals are routed to it via the Limited Alarm and Discrete Alarm functions. A discrete output can be assigned one of the following usage modes:

- DO
- Common alarm
- Stream
- Analyzer01

You can change the usage mode with MON2020.

Switch: Indicates the discrete output's operational mode. Options are:

- Auto
- On
- Off

Current Value: Indicates the current state of the discrete output. Options are:

- On
- Off

Analog Inputs screen

Analog Inputs

Label	Analog Input 1
Switch	Var_Standard
Current Value	23.5
Fixed Value	
Zero Scale	0
Full Scale	100
mA	7.68

Man Anly (1->1) | Run 59/240 | 03/09/2016 01:05:18 PM

Label: The name of the analog input as set in MON2020.

Switch: An analog input has two operational modes:

- Setting the switch to **Variable** means that the analog input is set automatically, based on the signal it receives.
- Setting the switch to **Fixed** means that the analog input is set to the value that you enter in the **Fixed Value** field.

You can change the field with MON2020.

Current Value: Displays the current value of the analog input signal.

Fixed Value: If the analog input is set to Fixed, then analog input signal is set to the value that you enter into this field. You can change the field with MON2020.

Zero Scale: The minimum analog input signal value. You can change the field with MON2020.

Full Scale: The maximum analog input signal value. You can change the field with MON2020.

mA: Displays the amount of current being received, in milliamperes.

Analog Output screens

Figure 4-7: Analog Output 1 Screen

Analog Output

Label	Analog Output 1	Analog Output 2
Switch	Var_Standard	Var_Standard
Variable	Last Analy_HV Gross BTU Dry	Last Analy_HV Gross BTU Sat
Current Value	1056	1037.63
Fixed Value		
Zero Scale	800	800

Man Anly (1->1) | Run 89/240 | 03/09/2016 01:09:48 PM

Figure 4-8: Analog Output 2 Screen

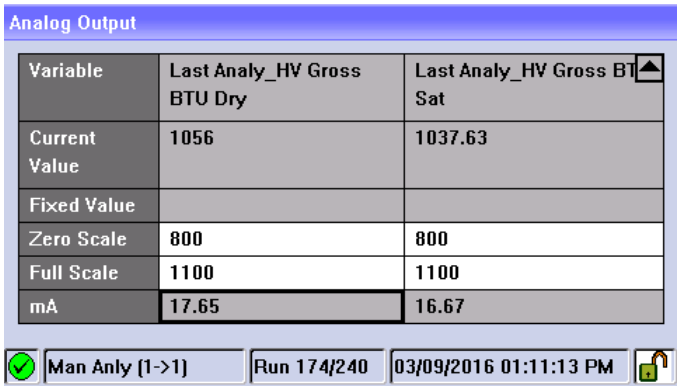

Label: The name of the analog output as set in MON2020.

Switch: An analog output has two operational modes:

- Setting the switch to **Variable** means that the analog output is proportional to the variable displayed in the **Variables** field.
- Setting the switch to **Fixed** means that the analog output is set to the value that is entered in the appropriate **Fixed Value** field.

Variable: Displays the system variable to which the analog output is associated. You can change this variable with MON2020.

Current Value: Displays the current scaled value of the analog output signal.

Fixed Value: If the analog output is set to **Fixed**, then analog output signal is set to the value that you enter into this field. You can change this field.

Zero Scale: The minimum analog output signal value.

Full Scale: The maximum analog output signal value.

mA: Displays the amount of current being produced in milliamperes.

4.3.3 Application menu

System screen

Analyzer Name: Displays the GC name that appears in the status bar on the main window when MON2020 is connected to the GC.

System Description: Displays information that further identifies the currently connected system.

Firmware Version: Revision level of firmware of the GC.

Serial Number: Serial number of the GC.

Company Name: The name of the company that owns the GC.

Location: The physical location of the GC.

Maintenance Mode: Switches the GC to Maintenance mode and triggers an alarm that the GC is down for maintenance. You can switch this option on or off.

Enable Energy Value Check: At the end of a calibration, if this feature is enabled, the GC calculates the energy value and compares it against the value entered on the ***Cal Gas Cert CV*** screen. If the values diverge significantly, the **Calibration Energy Value Check Fail** alarm is triggered.

Std Comp Table Version: Indicates which version of the GPA's standard component table is being used.

GC ID: Identification number.

Config Checksum at Lockout: The checksum of the configuration fields, which is calculated when the **Security** switch is locked.

Current Config Checksum: The GC will periodically recalculate and update the configuration checksum. This current value will be the latest calculated value.

Checksum Update Time: The time that the configuration checksum was last updated.

Default Stream Sequence: Displays the default sequence to be used by the GC during auto-sequencing.

Component Data Table screen

Component: Displays the list of available components for the selected stream.

Ret Time: A component's retention time, which is the time, in seconds, when the apex of the component's peak is expected to appear.

Resp Fact: A component's response factor is equal to the value of the component's peak divided by the component's concentration value.

Calib Conc: The concentration amount, in mole percent, of the component that is present in the calibration gas.

Uncert %: The maximum acceptable percent of deviation between the new sample concentration value for the specified component and its calibration concentration value.

Calibration Gas Info screen

Displays the calibration concentration per component as entered from the calibration certificate.

Press **Enter** to display the Uncertainty percentage.

Press **Enter** again to display Cal Gas Energy Value.

Timed Events screen

Event Type: Displays the type of event that occurred.

Valve/Det: The ID number or name of the valve or detector that was affected by the event.

Value: The value depends on the event that is displayed the Event Type column:

- Slope Sensitivity and Peak Width: The number of points to be used.
- Single Baseline: Off, End, or Bgn.

- All other events: On or Off.

Time(s): Indicates at what time, in seconds, the event will occur during the analysis.

Reset Time screen

Reset Time: The time of day daily reports are run

WeekDay: The day of the week that weekly reports are run

Day: The day of the month that monthly reports are run

Calculations Configuration screen

Calculation Method: The GC is either configured to perform GPA calculation, ISO calculation, or both.

Base Pressure Units: The units the calculations are done in.

On this screen, you can configure the following:

- ISO Pressure Units
- ISO Version
- Primary Temperature
- Secondary Temperature
- Primary CV Units
- Secondary CV Units
- GPA Calculation Units
- GPA Pressure Units

Streams screen

Label: The name of the stream.

Usage: The type of stream. There are four types: Analy (Analysis), Cal (Calibration), Validate (Validation), and Unused.

Tot: The number of runs to make for each calibration or validation.

Avg: The number of most-recent calibration or validation runs to use in the average calculation; for instance, if five calibration runs are performed and Avg is set to 3, then the last three runs of the five are used to average the calibration results.

Date/Time: The time at which the first automatic calibration or validation should be performed.

Base Prs: Pressure of the gas in pounds per square inch (psia).

Communications screen

Label The name of the port. This can be changed using the MON2020 configuration software.

Modbus ID Identification number of the Modbus® device used by a host device to communicate with the GC.

Baud Rate The baud rate setting. Can be set to one of the following:

- 1200
- 2400
- 9600
- 19200
- 38400
- 57600

Data Bits The number of data bits. For RTU communication, this is typically set to 8 bits, and for ASCII mode this is typically set to 7 bits.

Stop Bits The number of stop bits. This can only be set to **1** in the Rosemount 370XA.

Parity The parity check method. For RTU mode, this should be set to NONE. For ASCII mode, this can be set to EVEN or ODD.

MAP File The name of the Modbus MAP file being used by the port. The SIM_2251 Modbus map is the same registers as the Rosemount Model 500/2350A C6+ application that is commonly pre-configured in custody transfer flow computers and RTU systems. The default map is a fully configurable Modbus map that uses the MODICON message format.

You can use MON2020 software to modify both Modbus maps. For details on modifying the Modbus maps, refer to the MON2020 manual.

Port The type of physical message protocol to be used for the port. Each port can be set to RS-232 or RS-485 mode independently.

Note
The port will automatically communicate in ASCII or RTU mode, depending on the message format received from the host device.

TCP/IP Settings screen

Ethernet 1 IP Address: IP address used to connect to the GC's RJ45 Ethernet port.

Ethernet 1 Subnet Mask: Subnet mask for the Eth1 IP address.

Ethernet 1 Gateway: Default gateway address for the Eth1 IP address.

Ethernet 1 DHCP: Indicates whether or not the RJ45 Ethernet port’s DHCP feature is enabled. The DHCP enable switch is located on the back plane at SW1.

Ethernet 2 IP Address: IP address to use to connect to the GC's wired Ethernet port.

Ethernet 2 Subnet Mask: Subnet mask for the Eth2 IP address.

Ethernet 2 Gateway: Default gateway address for the Eth2 IP address.

LOI IP Address: IP address for the GC's local operator interface (LOI) port.

4.3.4 Logs menu

Alarm Log screen

User Name: User name of the person who is logged in to the gas chromatograph.

Date/Time: Indicates the date and time when the alarm condition began.

State: Indicates whether the alarm is active (SET) or inactive (CLR).

Alarm Msg: Describes the alarm condition.

Event Log screen

User Name: User name of the person who made the change.

Date/Time: Indicates the date and time when the event occurred.

Event Msg: Displays a description of the event.

Maintenance Log screen

User ID: User name of the person who made the log entry.

Date/Time: The date and time that the log entry was created.

Message: Describes the nature of the maintenance activity that was performed. You can edit this field.

Note
To add an entry to the log, press **1** on the keypad.

Add a new Maintenance Log screen

You can access this screen from the ***Maintenance Log*** screen.

Procedure

1. Use the **Up** or **Down** arrow keys to select the appropriate maintenance task from the dropdown list.
2. Press to add the log message to the ***Maintenance Log*** screen.
   The entry and its creation date will appear at the top of the log.

4.3.5 GC Control menu

Auto Sequence screen

Select the **Purge stream for 60 seconds** check box if you want to allow sample gas to flow through the sample loop for 60 seconds prior to beginning the first analysis.

To start the auto sequence process, press on the keypad.

Single Stream screen

Select the **Purge stream for 60 seconds** check box if you want to allow sample gas to flow through the sample loop for 60 seconds prior to beginning the first analysis.

Select the **Continuous operation** check box if you want to allow for the repeated analysis of the selected stream.

To start a single stream analysis, select a stream and then press ✓ on the keypad.

Halt screen

You must be logged in at least at the Regular user level to access this screen. If you are not already logged in, the ***Login*** screen displays.

To halt an analysis, press ✓ on the keypad.

Calibration screen

You must be logged in at least at the Regular user level to access this screen. If you are not already logged in, the ***Login*** screen displays.

There are two types of calibration:

- Select **Normal** to perform a manual calibration in which the component data table for the selected stream will be updated with calibration data **unless** the data is outside the acceptable deviations that are listed in the component data table.
- Select **Forced** to perform a manual calibration in which the component data table for the selected stream will be updated with calibration data **even if** that data is outside the acceptable deviations that are listed in the component data table.

Select the P**urge stream for 60 seconds** check box if you want to allow sample gas to flow through the sample loop for 60 seconds prior to beginning the first analysis.

To start a calibration, select a stream and then press ✓ on the keypad.

Validation screen

You must be logged in at least at the Regular user level to access this screen. If you are not already logged in, the ***Login*** screen displays.

Select the **Purge stream for 60 seconds** check box if you want to allow sample gas to flow through the sample loop for 60 seconds prior to beginning the first analysis.

To start a validation, select a stream and then press ✓ on the keypad.

Auto Valve Timing screen

You must be logged in at least at the Regular user level to access this screen. If you are not already logged in, the ***Login*** screen will display.

This automatic procedure, which takes up to one hour to complete, includes the following sequence of tasks:

- Set the timing for each valve.
- Match all the component peaks.
- Adjust the timed events based on peak integration times.
- Run a calibration.
- Check the range and order of response factors.
- Adjust the retention time deviations to avoid peak overlapping.

To start the process, select a stream and then press ✓ on the keypad.

After AVT starts, if AVT fails, the local operator interface (LOI) will show **AVT Initialization failed**. If AVT is successful, the LOI will show **AVT Initialization successful**.

4.3.6 Tools menu

Screen Control screen

Use the **Up** or **Down** arrow keys to select a brightness level from the list box and then press ✓ on the keypad.

Set GC Time dialog

You must be logged in at least at the Regular user level to access this screen.

If you are not already logged in, the ***Login*** screen displays.

To change the date or time:

Procedure

1. Press ✓ to activate the MM text box.
2. Enter the appropriate number for the current month.
3. Press ✓.
4. Move to the next text box.
5. Repeat Step 1 through Step 3 for the other text boxes.

Daylight Savings Time

Daylight Savings Time is the practice of temporarily advancing clocks so that afternoons have more daylight and mornings have less. Typically, clocks are adjusted forward one hour near the start of spring and are adjusted backward in autumn. Since the use of Daylight Savings Time is not universal, you have the option of enabling or disabling it with the LOI.

To enable or disable Daylight Savings Time:

Procedure

1. Use **Down** to select the **Enable Day Light Savings** checkbox.

2. Press to toggle the checkbox.

4.4 Common local operator interface (LOI) tasks

4.4.1 Configure the serial communications settings

To configure the serial port communication settings to communicate with Modbus® host devices such as a flow computer, RTU, SCADA, or DCS, the protocol settings for all the devices on the network must match.

Obtain the required serial port settings prior to configuring the settings on the GC.

Procedure

1. Go to the ***Main Menu*** and select **Communications** on the ***Application*** menu. The ***Communications*** screen displays.
2. Enter the serial port settings.
   - Modbus ID: The address that the host device will use to communicate with the GC. For applications where the GC is the only slave device on the network, the Modbus ID is typically set to **1**. For multi-dropped applications where the GC is one of several on the serial network, the Modbus ID needs to be unique. Refer to your host device configuration to determine the Modbus ID to be configured on the GC.
   - Baud Rate: The baud rate can be set at the standard rates from 1200 baud up to 57600. For ModBus communications, the typical setting is **9600**.
   - Data Bits: The number of bits used for communications. The typical setting for ASCII mode communications is **7**. The typical setting for RTU mode communications is **8**.
   - Stop Bits: The number of bits sent to indicate the end of a message. Typically set to **1**.
   - Parity: The error checking mode for the parity bit in ASCII mode messages. This can be set to either **ODD** or **EVEN** for ASCII mode communications and must match the host device's setting. Set to **NONE** for RTU mode communications.
   - MAP File: The Modbus address map. By default, this is set to **SIM_2251**, which is a pre-configured map that is the most common communication mapping for flow computer-to-GC communications. Refer to the MON2020 manual to learn more about configuring custom maps.
   - Port: The selection between RS-232 and RS-485 physical layer communication protocol.

Note
The Rosemount 370XA does not have a setting for ASCII or RTU mode. The GC automatically detects the mode during its initial communications with the host device and automatically selects the correct mode.

3. Press ✓ to save the changes and return to the ***Main Menu***.

4.4.2 Set the calibration gas concentration values

Note
You can also use MON2020 to enter these values. Select **Component Data** from the ***Application*** menu.

Procedure

1. Go to the ***Main Menu***.
2. Move to the ***Application*** menu and select **Calibration Gas Info**.
   The ***Calibration Concentration*** screen displays.

   Note
   If more the one calibration stream is is configureed, from the ***Streams*** screen, select the Calibration Stream, and then select a Cal Stream. The ***Calibration Concentration*** screen displays.

3. Enter the concentration values that are written on the calibration gas' certificate into the appropriate fields on the ***Calibration Concentration*** screen.

   Note
   If the **Auto Calculate Methane** checkbox is selected, the methane value is calculated based on the values entered in the other fields. This value updates after each new entry.

4. If the calibration gas's certificate displays a methane value, compare the it to the ***Calibration Concentration*** screen's methane value. If the values do not match, confirm that you have entered the other values correctly.
5. Press ✓.
   The ***Uncertainty %*** screen displays.
6. Enter the uncertainty values from the calibration gas' certificate into the appropriate fields on the ***Uncertainty %*** screen.

   Note
   If the calibration gas certificate does not list the uncertainty percentages, enter the default value of **2**.

7. Press ✓.
   The ***Cal Gas Certificate CV*** screen displays.
8. Enter the Cal Gas Certificate CV and CV Check Deviation values from the calibration gas's certificate.

   Note
   The GC calculates the energy content using the C6+ ratio configured in the GC at the factory. Because the energy content data on the calibration certificate is typically calculated using the energy value of the actual components in the mixture, there may be a difference between the GC's energy values and the calibration certificate's energy values. If the values don't match, enter the calculated values

from the GC to ensure the energy value check during the calibration runs will not cause nuisance alarms.

9. Press ✓.

Note
For other configuration settings, refer to Advanced configuration and operation topics.

4.4.3 Set the time

Procedure

1. Press **Enter** to go to the ***Main Menu***.
2. Press **Right** to move to the ***Tools*** menu.
3. Press **Down** to move to the **Set GC Time** command and press **Enter**.
   The ***Set GC Time*** screen displays.
4. Set the current date and time.
   a. Press **Edit** to activate a field.
   b. Use the numeric keys to enter the date and time.
   c. Press **Enter** to accept an entry and to deactivate the field.
   d. Use the arrow keys to move to the next field.
5. If your country employs Daylight Savings Time, select the **Enable Day Light Savings** check box, which is unselected by default.

Note
You must use MON2020 to configure Daylight Savings Time.

4.4.4 Calibrate the GC for the first time

Procedure

1. Open the ***Heater*** screen.
2. Confirm that the Temperature for Heater 1 matches the Setpoint and the Current PWM is less than 40.
   If it is not, see Troubleshooting.

Note
The Current PWM shows the percentage of time power is applied to the heater. Values under 40 indicate a stable temperature has been reached. If a stable temperature has not been reached three hours after the power was applied, refer to Troubleshooting.

3. Press ⊗ to close the screen.
4. Go to the ***GC Control*** menu and select **Single Stream**.

The ***Start Single Stream Analysis*** screen displays.

Note
You may be asked to log in first.

5. Select the calibration stream by clicking **Edit**, using the arrow keys to highlight **4-Cal**, and clicking **Edit** again.
6. Make sure the **Purge Stream for 60 seconds** and the **Continuous Operation** check boxes are selected.
7. Press ✓ to start the analysis.
8. Press ⊗ to return to the ***Home*** screen.

Note
The first few analysis runs show a chromatogram on the ***Home*** screen that may not look normal. This is common for the first runs after the unit has been started up after an extended amount of down time.

9. Let the analysis run for 30 minutes and then go to the ***GC Control*** menu and select **Halt**.
10. Wait for the analysis cycle to finish and the mode to change to Idle.
11. Return to the ***GC Control*** menu and select **Calibration**.
    The ***Start Calibration*** screen displays.
12. Make sure the **Purge Stream for 60 seconds** and the **Normal** checkboxes are selected.
13. Press ✓ to start the calibration.
14. Wait for the calibration cycle to complete.
    By default, this will run for three analysis cycles.

Note
If the calibration generated any alarms go to the ***Current Alarms*** screen to view them. Refer to Troubleshooting to learn how to resolve calibration issues.

15. Open the isolation valves for the sample stream(s) and set the pressure to between 15 and 30 psig (1 to 2 BarG).
16. Go to the ***GC Control*** menu and select **Auto Sequence**.
    The ***Start Auto Sequence*** screen displays.
17. Ensure that the **Purge Stream for 60 seconds** checkbox is selected.
18. Press ✓ to start the analysis.
19. Go to the ***View*** menu and select **Reports**.
    The ***Report Display*** screen displays.
20. View the analysis report for each stream and confirm that the un-normalized total is between 98 and 102.
    If it is not, refer to Troubleshooting.

The gas chromatograph is now running and analyzing the sample streams. It automatically calibrates once a day with the default settings, so the calibration gas must remain on. Refer to Advanced configuration and operation topics for further information and configuration instructions.

4.4.5 Configure the gas chromatograph's Ethernet ports

Procedure

1. Go to the ***Main Menu*** and select TCP/IP on the ***Application*** menu.
   The ***TCP/IP*** screen displays.
2. Make a note of the Ethernet settings for both ports.

   Ethernet 1 is the RJ-45 terminal that is commonly used for local computer access; Ethernet 2 is the port that is commonly used for communication with a supervisory system, such as a flow computer, remote terminal unit (RTU), SCADA, or DCS.
3. Enter the Ethernet settings according to the network requirements of your installation.
   If you intend to use Ethernet 1 for local access only, do not change the settings. Contact your network administrator or the person in charge of configuring your supervisory system network for the settings required to connect the GC to your network.

4.4.6 Acknowledge an alarm

Procedure

1. Go to the ***Current Alarm*** screen.

   This can be done in one of two ways:
   - From the ***Home*** screen, press **2**.
   - From the ***Main Menu***, navigate to the ***View*** menu and select **Current Alarms**.
2. From the ***Current Alarms*** screen, use **Up** and **Down** to move to the alarm that you want to acknowledge.
3. Press ✓.

The alarm is acknowledged.

4.4.7 Acknowledge all alarms

Procedure

1. Go to the ***Current Alarms*** screen.

   This can be done in one of two ways:
   - From the ***Home*** screen, press **2**.
   - From the ***Main Menu***, navigate to the ***View*** menu and select **Current Alarms**.
2. Press **1**.

All alarms are acknowledged.

4.4.8 Acknowledge and clear all alarms

Procedure

1. Go to the ***Current Alarms*** screen.
   You can do this in one of two ways:
   - From the ***Home*** screen, press **2**.
   - From the ***Main Menu***, navigate to the ***View*** menu and select **Current Alarms**.
2. Press **2**.

The alarms are acknowledged and cleared from the GC and the screen.

4.4.9 View the maintenance log

Procedure

1. Go to the ***Main Menu***.
   You can do this in one of two ways:
   - From the ***Home*** screen, press ✓.
   - From any other screen, press ✕.
2. From the ***Main Menu*** screen, use **Left** or **Right** to move to the ***Logs*** menu.
3. Use **Down** to highlight the **Maintenance Log** command.
4. Press ✓.

The ***Maintenance Log*** screen displays.

4.4.10 View the event log

Procedure

1. Go to the ***Main Menu***.
   You can do this in one of two ways:
   a) From the ***Home*** screen, press ✓.
   b) From any other screen, press ✕.
2. From the ***Main Menu***, use **Left** or **Right** to move to the ***Logs*** menu.
3. Use **Down** to highlight the **Event Log** command.
4. Press ✓

The ***Event Log*** screen displays.

4.4.11 View a live chromatogram

Live chromatograms display on the ***Home*** screen by default, but there are two other ways of viewing a live chromatogram on its own screen.

Method #1

From the ***Home*** screen, press **4** on the keypad. The ***Live CGM*** screen displays.

Method #2

Procedure

1. Go to the ***Main Menu*** screen.
   You can do this in one of two ways:
   a. From the ***Home*** screen, press ✓.
   b. From any other screen, press ✕.
   The ***Main Menu*** displays with the ***View*** menu selected.
2. From the ***View*** menu, use **Down** to highlight the **Chromatogram** command.
3. Press ✓.
   The ***CGM Settings*** screen displays. The live chromatogram is at the top of the list and has an icon beside it.
4. Press ✓.
   The ***Live CGM*** screen displays.
5. Press **Edit** to zoom, change the cursor, hide the baseline, change the scale, or see results.
6. Use the **Up** or **Down** key to highlight an option.
7. Press **Enter** to select the highlighted option.

4.4.12 View an archived chromatogram

Procedure

1. Go to the ***Main Menu*** screen.
   You can do this in one of two ways:
   - From the ***Home*** screen, press ✓.
   - From any other screen, press ✕.

   The ***Main Menu*** displays with the ***View*** menu selected.
2. From the ***View*** menu, use **Down** to highlight **Chromatogram**.
3. Press ✓.
   The ***CGM Settings*** screen displays.
4. Press **Down** to move from the live chromatogram and to select the archived chromatogram that you want to display.

5. Press ✓.
   The *Archived CGM* screen displays.
6. Press **Edit** to zoom, change the cursor, hide the baseline, change the scale, or see results.
7. Use **Up** or **Down** to highlight an option.
8. Press **Enter** to select the highlighted option.

4.4.13 Start a single stream analysis run

Procedure

1. Go to the *Main Menu* screen.
   You can do this in one of two ways:
   a. From the *Home* screen, press ✓.
   b. From any other screen, press ✕.
2. From the *Main Menu* screen, use the **Left** or **Right** arrow keys to move to the *GC Control* menu.
3. Press **Down** to highlight the **Single Stream** command.
4. Press ✓.
   The *Start Single Stream Analysis* screen displays.
5. Press **Down** to highlight the stream that you want to analyze.

   The Purge stream for 60 seconds feature allows sample gas to flow through the sample loop for 60 seconds prior to beginning the first analysis. The feature is checked by default.

   The Continuous operation feature allows for the repeated analysis of the selected stream. The feature is checked by default.

6. To select or clear the **Purge stream for 60 seconds** check box or the **Continuous operation** check box, do the following:
   a) Press **Down** to move from the Stream list box to the **Purge stream for 60 seconds** check box.
   b) To select or clear the **Purge stream for 60 seconds** check box, press ⊘.
   c) Press **Down** to move from the **Purge stream for 60 seconds** check box to the **Continuous operation** check box.
   d) To select or clear the **Continuous operation** check box, press ⊘.
7. Press ✓ to start the analysis run.

4.4.14 Start a calibration analysis run

Procedure

1. Go to the *Main Menu*.
   You can do this in one of two ways:
   a) From the *Home* screen, press ✓.
   b) From any other screen, press ✕.
2. From the *Main Menu*, use **Left** or **Right** to move to the *GC Control* menu.
3. Press **Down** to highlight the **Calibration** command.
4. Press ✓.
   The *Start Calibration* screen displays.
5. Press ⊘.
6. Press ✓.

   The Purge stream for 60 seconds feature allows sample gas to flow through the sample loop for 60 seconds prior to beginning the first analysis. The feature is checked by default.

   There are two types of calibration:

   a) A Normal calibration is a manual calibration in which the newly computed calibration factors are updated to the component data table (CDT) **only if** the deviation with previous factors don't exceed limits set in the CDT. This is the default option.
   b) Forced calibration is a manual calibration in which the component data table for the selected stream is updated with calibration factors **even if** that data is outside the acceptable deviations that are listed in the CDT.
7. To select or clear the **Purge stream for 60 seconds** check box, do the following:
   a) Press **Down** to move from the *Stream* dropdown list to the **Purge stream for 60 seconds** check box.
   b) To select or clear the **Purge stream for 60 seconds** check box, press ⊘.
   c) If you do not want to select a calibration type, press ✓.
      The calibration starts.
8. To select a calibration type, do the following:
   a) Press **Down** to move from the **Purge stream for 60 seconds** check box to the set of Calibration Type checkboxes.
      The **Normal** checkbox is selected.
   b) If you want to select Forced, press **Down**.
   c) Press **-** (hyphen) to start the calibration run.

4.5 Advanced configuration and operation topics

4.5.1 Validation

You can configure the Rosemount 370XA to validate an analysis of the calibration standard (or another stream) to ensure that the analysis is within specified limits. You can configure the validation for any of the streams, including the calibration stream (default). You can configure the validation to run automatically at a set time and frequency, or you can initiate it manually.

In previous generations of gas chromatographs, operators ran a daily calibration to verify the correct operation and to account for changes in measurement on a daily basis. They would typically configure a calibration run to run for three analysis cycles of the calibration gas; the calibration run changes the response factors.

The main advantage of the validation is to confirm the analysis is within specifications without changing the calibration factors.

Prepare for a validation

Before starting a validation run you must configure the stream that you intend to use as the validation stream.

The Rosemount 370XA allows you to assign virtual streams to any of its stream selection solenoids. By default, the fifth stream is configured as the validation stream.

Procedure

1. Start MON2020 and select Streams on the ***Application*** menu.
   The ***Streams*** window opens.
2. Enter the Total Runs and Avg Runs for the validation cycle.

   The Total Runs is the number of analysis cycles that will be run in total. The Avg Runs is the number of runs that are used to average and then validate the data. For example, if the Total Runs is 3, and the Average Runs is 2, the validation cycle analyzes the validation streams for three cycles, and the last two cycles are used to average the results and validate the measured values. By default, both are configured for one run only.
3. Select the physical stream in the ***Stream Valve*** column that will be used for the validation gas.
   - If validating against the calibration gas, select **Calibration** from the ***Stream Valve*** dropdown list.
   - If validating with a gas other than the calibration gas on a single-stream GC, select **Calibration** from the ***Stream Valve*** dropdown list and install a manual three-way valve before the calibration inlet on the sample conditioning system.
   - If validating with a gas other than the calibration gas on one of the streams of a multi-stream GC, select the appropriate stream valve from the ***Stream Valve*** drop-down list.
4. If you are using the calibration gas, or if the validation gas is permanently installed and you want to run a validation on a schedule, do the following:

a) Select the checkbox in the appropriate Auto column.

b) Select the Start Time for the first validation.

c) Enter the Interval, in hours, between validation runs.

Note
If you are configuring an auto-validation and an auto-calibration, schedule the validation run to occur at least 30 minutes before the calibration run to provide a validation of the measurement just before the calibration cycle re-calculates the response factors.

5. Click **OK** to save the data and close the ***Streams*** window.
6. Select **Validation Data** on the ***Application*** menu.

   The ***Validation Data*** window opens.

   Note
   The **Validation Data** command is not available on the **Application** menu unless at least one stream is assigned to **Validate** in the Usage column in the ***Streams*** window.

7. Select the Variables to be validated and enter the Nominal Value and the Percent Deviation for each.

   Note
   When entering variables, if you want to enter the next component from the component data table based on the previously entered component, click **C+Copy (F8)**.

Run a validation

Once the validation settings have been configured, the validation cycle begins at the scheduled time if the GC is in Auto mode.

You can also start a validation cycle by selecting **Validation** on the ***Control*** menu in MON2020.

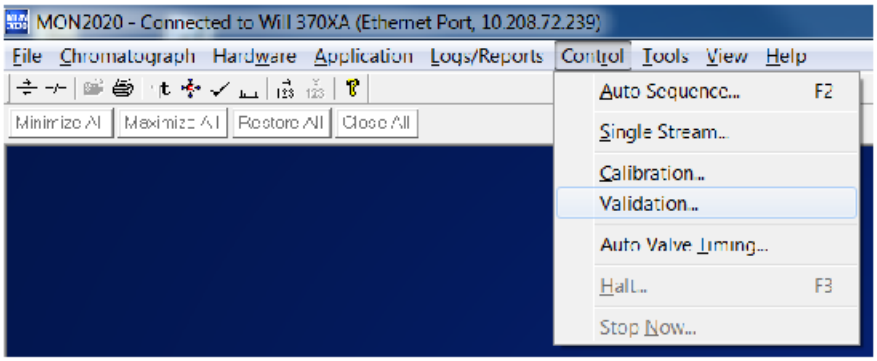

Note
You can generate a validation report at any time by choosing **Main Menu** → **View** → **Report Display** from the LOI or **Logs/Reports** → **Report Display** from MON2020.

4.5.2 Change the calibration gas

Changing the calibration gas is a very critical procedure that can significantly affect the accuracy of the gas chromatograph if not performed correctly.

Before using a new calibration gas blend for calibrating the gas chromatograph, you must verify the composition stated on the certificate by using the Rosemount 370XA to analyze the new calibration gas.

Procedure

1. Go to the ***Tools*** menu and select **Change Cal Cylinder**.

   The ***Calibration Cylinder Replacement Assistant*** screen displays.

   Note
   You may be required to log in first. The default login values are:
   User: emerson

   Password: [blank]

2. Follow the software assistant's prompts.

   Note
   On step 6, enter the calibration gas concentrations. You can obtain these from the bottle certificate. The screen auto calculates the methane value if the **Auto Calculate Methane** check box is selected. If the calibration gas's certificate displays a methane value, compare the value to the screen's methane value. If the values do not match, confirm that you have entered the other values correctly.

   Note
   If the certificate states an uncertainty percentage for each component, enter them on step 7. If the certificate does not show the uncertainty percentages, then use the default value of **2%**. The uncertainty values can be used to confirm that the analysis of the calibration gas matches the certificate values before the standard is used to calibrate the GC.

   Note
   If the certificate includes the energy content, enter it on step 8. If the certificate does not include an energy content, use the calculated energy content shown.

After you have followed all of the assistant's prompts, it analyzes the calibration gas and repeats the analysis until the nitrogen value repeats within the uncertainty value entered on a previous screen. Because air is 78 percent nitrogen, and the calibration gas contains significantly less nitrogen than this, the analyzed nitrogen content should typically start high and then decrease as the system is purged with the new gas. The screen displays the nitrogen value for each run on the table to the left of the chromatogram. Once the nitrogen value has stabilized, the last analysis is compared to the entered certificate values to ensure that the GC is analyzing accurately.

4.5.3 Auto valve timing

The analytical valves in the oven are switched on or off during the analysis cycle to change the analytical flow path to separate certain components through particular columns. For the C6+ analysis, column one separates the hexane and heavier components (C6+) from the pentane and lighter components; column two separates the propane to pentane components; and column three separates the nitrogen, methane, carbon dioxide, and ethane. The timing of the valve switching is critical to the accurate performance of the analysis.

Over time, the resistance to flow and the performance of the columns changes (typically, the retention times get slower) resulting in the switching of the valves *cutting* into some of the component, rather than switching between the peaks as they elute from a column.

Figure 4-9: Timing of Valve Switching

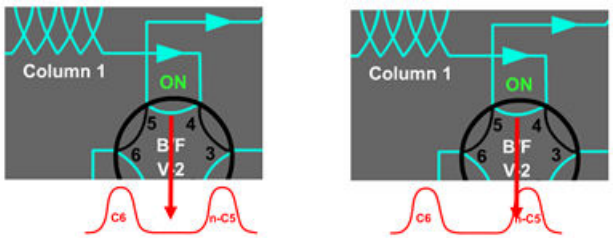

This image shows two different times for switching the valves when two components are eluting from a column. The example on the left shows the ideal time between the two peaks. The example on the right shows the valve timing is too early, and will result in the exclusion of some of the normal-pentane.

Traditionally, highly trained gas chromatograph experts would manually adjust the valve timing and tune the timing of the integration events occasionally to account for the small changes in retention times and measurement issues.

Auto valve timing (AVT) automates this process so that even an inexperienced operator can initiate an adjustment of the valve timing, letting the GC's internal algorithm adjust and optimize the valve timing automatically.

To initiate AVT, go to the ***Control*** menu from the local operator interface (LOI) or MON2020 and select **Auto Valve Timing**.

The AVT uses the calibration stream to make adjustments. The configuration selection provides options for the starting point for the adjustments:

- Use Factory Defaults: The AVT algorithm starts using the factory default values loaded into the module when the module was originally built. Use this option when maintenance has been performed on the module; for example, the analysis valve diaphragms have been overhauled, and the retention times have significantly changed from the last calibration.
- Use current: The AVT algorithm will start using the valve timing and integration settings currently in the module.

4.5.4 Warm-start mode

When power is reinstated after being lost while the GC is in auto-analysis mode, the GC enters Warm-start mode and tries to go back on line.

In Warm-start mode, the GC monitors the oven temperature until it is stabilized at the set point, runs calibration gas, and checks that all of the components are detected correctly. Once the calibration gas has been analyzed correctly, the GC re-enters Auto-analysis mode.

If the Warm-start mode fails to complete within two hours, a **Warm-start failure** alarm is triggered, and the GC goes into Idle mode.

4.5.5 Maintenance mode

Maintenance mode allows you to work on the GC while alerting the supervisory system that the current analysis may not be valid and should not be used. Maintenance mode triggers a system alarm that can be read as a Modbus® Register (bit 0 on Register 3046 in the SIM_2251 Modbus map) and on the **Common Alarm** digital output.

To enable Maintenance mode, go to the ***Application*** menu from the local operator interface (LOI) or MON2020 and select **System**.

When Maintenance mode is active, the analysis in the Modbus registers is still updated so that communication to the supervisory system can be tested; however, the analysis results during Maintenance mode are not included in the averages calculated by the GC.

4.5.6 Conserve calibration gas

To save calibration gas, the Rosemount 370XA has a unique feature called Cal-Gas Saver that reduces calibration gas usage significantly.

During normal operations, the next stream will start to be purged through the sample loop from when the sample shut-off valve that is operated by the back-flush valve timing, at around 25 seconds, is opened, through to the start of the next analysis. This ensures that the sample lines and the sample loop are completely purged of the previous stream and the sample loop is full of the next sample to be analyzed.

Figure 4-10: Cal-Gas Saver

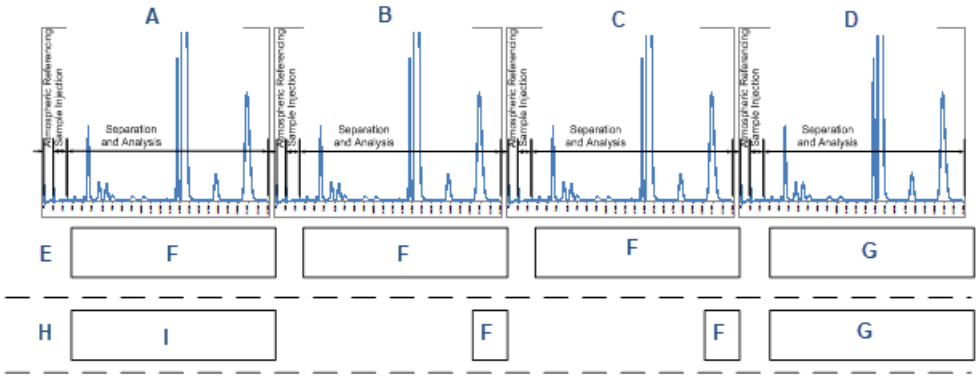

A. Sample stream analysis
B. Calibration gas cycle 1
C. Calibration gas cycle 2
D. Calibration gas cycle 3
E. Purge flows without Cal-Gas Saver
F. Calibration gas purge
G. Sample stream purge
H. Purge flows with Cal-Gas Saver
I. Initial calibration gas purge

A calibration cycle involves running multiple analysis cycles of the calibration gas. Because there are multiple runs of the same gas, there is no need to purge the sample lines leading up to the sample loop after the first analysis run. To conserve the amount of calibration gas used by the GC while still maintaining calibration accuracy, the Cal-Gas Saver feature turns off the calibration gas stream for a longer period during the calibration gas analysis cycles to dramatically reduce the amount of calibration gas consumed.

Figure 4-11: Valve Events Dialog Window Showing Cal Gas Save Events

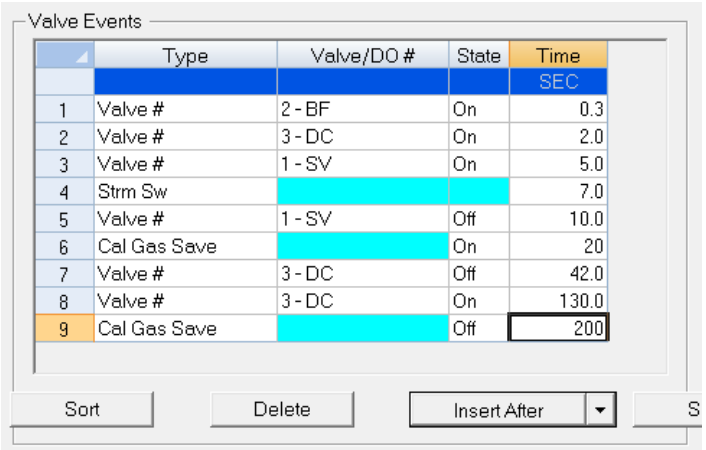

Valve Events

	Type	Valve/DO #	State	Time
				SEC
1	Valve #	2 - BF	On	0.3
2	Valve #	3 - DC	On	2.0
3	Valve #	1 - SV	On	5.0
4	Strm Sw			7.0
5	Valve #	1 - SV	Off	10.0
6	Cal Gas Save		On	20
7	Valve #	3 - DC	Off	42.0
8	Valve #	3 - DC	On	130.0
9	Cal Gas Save		Off	200

Sort | Delete | Insert After | S

By default, the Cal-Gas Save is switched on at 20 seconds and turned off at 200 seconds, but you can change these values.

1. Start MON2020 and select **Timed Events** on the ***Application*** menu. The ***Timed Events*** window opens.
2. Locate the first Cal Gas Save event on the ***Valve Events*** table. This event switches on the Cal-Gas Saver feature.
3. Enter a new start time in the appropriate Time field.
4. Locate the second Cal Gas Save event on the ***Valve Events*** table. This event switches the Cal-Gas Saver feature off.
5. Enter a new end time in the appropriate Time field.
6. Click **OK** to save the changes and close the window.

4.5.7 New Module software assistant

When you install a new analytical module on the Rosemount 370XA and turn on the power, the GC recognizes that a new module has been installed and starts the ***New Module*** software assistant, which heats up the oven, runs carrier gas through the analytical paths, and cycles the analytical valves to rapidly purge the system.

Figure 4-12: New Module Software Assistant

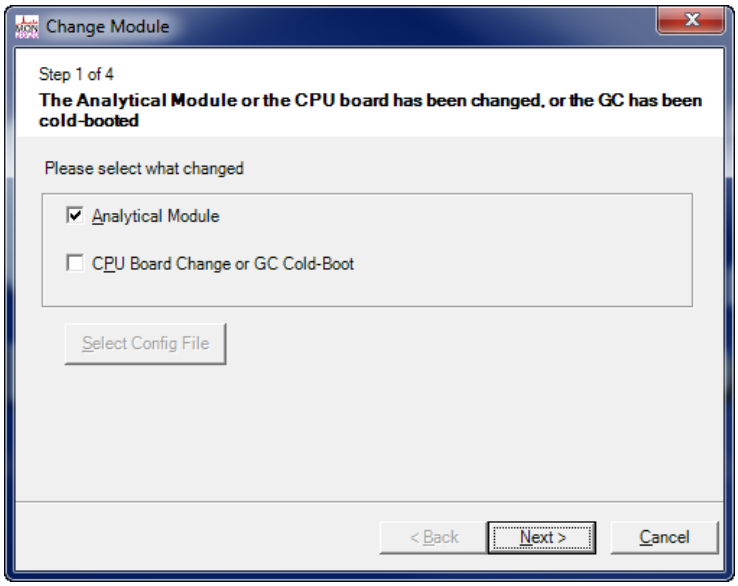

Note
You can initiate the ***New Module*** software assistant from the local operator interface (LOI) or MON2020 by selecting **Module Validation** on the ***Tools*** menu.

Note
Changing the CPU board will also start the ***New Module*** software assistant because of the mismatch between the CPU board and the analytical module. In this case, you should stop the assistant by pressing ⊗.

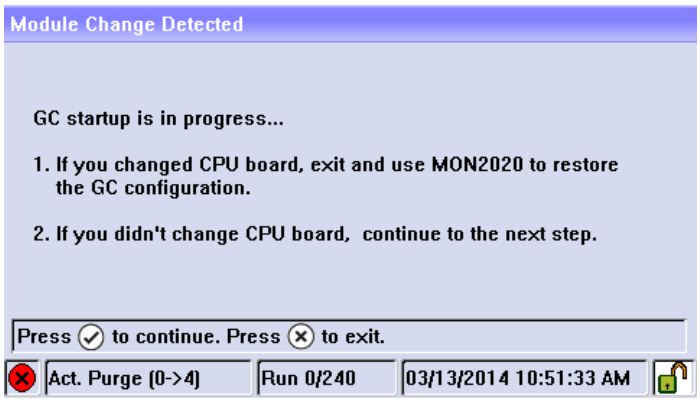

While the GC is heating up to temperature, the LOI shows the ***Calibration Gas Info*** composition screen so that you can confirm that the module's calibration gas values match the concentrations and the uncertainty on the calibration gas bottle certificate.

Figure 4-13: Calibration Concentration Information

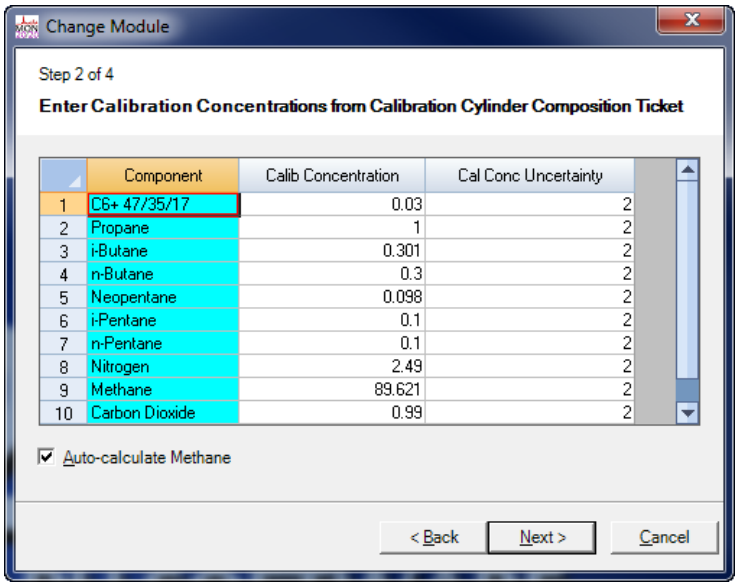

	Component	Calib Concentration	Cal Conc Uncertainty
1	C6+ 47/35/17	0.03	2
2	Propane	1	2
3	i-Butane	0.301	2
4	n-Butane	0.3	2
5	Neopentane	0.098	2
6	i-Pentane	0.1	2
7	n-Pentane	0.1	2
8	Nitrogen	2.49	2
9	Methane	89.621	2
10	Carbon Dioxide	0.99	2

When the oven temperature has stabilized, the software assistant automatically runs the calibration gas and validates the module. The validation runs three analysis cycles of calibration gas and confirms that the analysis is within the pre-configured specifications. If the analysis is within the specifications, a calibration cycle is then run. If the analysis is not within the specifications, a **Module Validation Fail** alarm is raised, and the GC goes into Idle mode.

After the calibration cycle is completed, the GC goes into Auto mode and begins analyzing the stream gas.

5 Preventative maintenance

Emerson recommends calibrating the gas chromatograph (GC) daily and reviewing GC performance (repeatability, total unnormalized, n-pentane retention times, and ethane retention times) monthly.

5.1 Save diagnostic data

At least bi-monthly, create and save a diagnostic data file and check carrier and calibration gas supplies. Fill out the checklist in Maintenance checklist (see Section 4.3.1 of Rosemount™ 1500XA Gas Chromatograph).

5.2 Set up auto-calibration in software

Procedure

Set up the gas chromatograph (GC) to run auto-calibration daily in order to update response factors and retention times.

5.3 Display trend data

The data to plot the trend graphs displays in the table to the right of the graph display area.

Every month, run a trend analysis of daily calibration data. Review the following:

- Retention times for your critical components (ethane and n-pentane recommended)
- Unnormalized totals
- Calorific value

The ***Trend Data*** table contains the following columns:

Pt # For the purposes of trend graphs, each sample run is considered a data point. Therefore, if 2500 sample runs were used to generate the trend graph, then there are 2500 data points.

> **Note**
> The first sample, or point, is counted as *0*, not *1*. The final point is counted as *N - 1*, where *N* is the total number of points in the graph.

Value The data point's value.

Time The gas chromatograph (GC's) time when the sample was run and the value was calculated.

To view all trend data, click **Cur/All**. To view trend data for the trend graph selected from the ***Trend*** drop-down list, click **Cur/All** again.

The second trend data table is useful when zooming in to or out of the graph. When the **Selected Data** check box is selected, this table displays the trend data for the visible area

of the graph. As the example shows, the table indicates that the trend data for five samples are visible after zooming in to the graph.

Figure 5-1: Trend Data Window

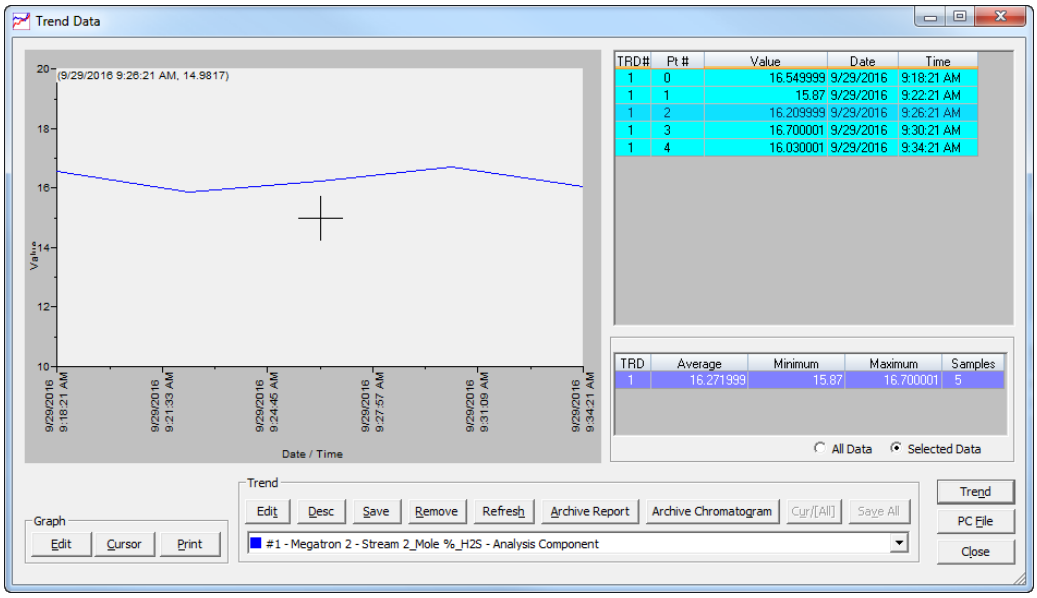

Procedure

1. Click **Trend** to configure the parameters for a trend file.
2. Click **PC File** to display the ***Open Trend File*** dialog and navigate to a saved file on your personal computer (PC).
3. Click **Close** to exit the ***Trend Data*** screen and return to the home page.

5.4 Configure the valve timing

If alarms occur or trends appear noisy, use the local operator interface (LOI) or Rosemount MON2020 to start the auto valve timing process.

Related information

Auto Valve Timing screen

6 Recommended spare parts

Emerson designed the Rosemount 370XA for easy maintenance in the field with a unique Maintainable Module™. To minimize downtime in the field, you can replace the entire analytical module with a spare one.

Additionally, a trained technician can repair the module on a component level, either in the field or at a central maintenance location. The Rosemount Lifecycle Services team can also repair the module.

This list of spare parts includes an entire analytical module, plus the components typically required to maintain the module in typical natural gas service and the sample handling components that may need to be replaced on a regular basis.

Table 6-1: Spare Parts

Part number	Quantity	Description
7A00136G04	1	Replacement Maintainable Module kit, C6+, multi-stream (3 sample + calibration gas)
7A00136G05	1	GOST replacement Maintainable Module kit, C6+, multi-stream (3 sample + calibration gas)
7A00136G06	1	OIML replacement maintainable module kit, C6+, multi-stream (3 sample + calibration gas)
7A00136G07	1	Measurement Canada replacement Maintainable Module kit, C6+, multi-stream (3 sample + calibration gas) OIML
7A00137G01	3	6-port valve diaphragm repair kit
7A00140G01	1	Sample shut-off valve repair kit
7C00020-001	1	Valve, solenoid, 4-way, SMC
7C00023-001	1	Valve, solenoid, 2-way isolation, Asco
7C00024-001	1	Valve, proportional, solenoid, Asco for amber-colored Maintainable Module (7A00136G02)
7C00024-002	1	Valve, proportional, solenoid, Asco for white-colored Maintainable Module (7A00136G04)
2-4-5000-938	1	Membrane kit, Genie® model 120 filter/bypass/LSO
2-4-5000-113	1	Filter element 2 micron, Swagelok® SS-2F-K4-2
7A00022G01	1	Assembly, carrier dryer, compact, sample system, Rosemount 370XA

7 Replacing the Maintainable Module™

7.1 Remove the Maintainable Module™

Tools required

- 2 mm hex or Allen wrench
- 4 mm hex or Allen wrench

Procedure

1. Disconnect power from the GC.
2. Turn off the sample gas(es) at the isolation valve(s) in the external sample system closest to the GC.
3. Turn off the calibration gas at the isolation valve closest to the GC.
4. Turn off the carrier and actuation gases at the isolation valve closest to the GC.
5. Use a 2 mm hex wrench to loosen the dome locking screw (A) located on the left side of the GC above the gas lines.

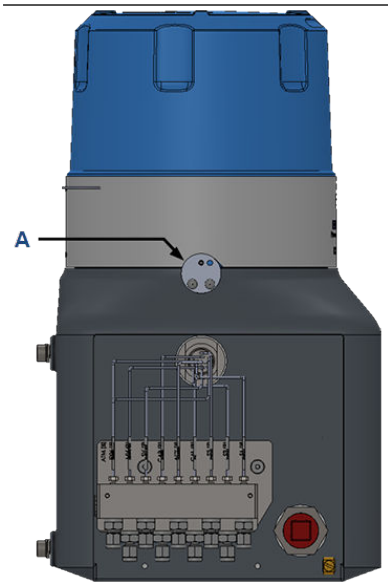

A. Dome locking screw

6. Unscrew the dome.

   If the dome is too tight, insert two screwdrivers or similar tools into the grooves (A) at the top rim of the dome to provide additional leverage when twisting the dome.

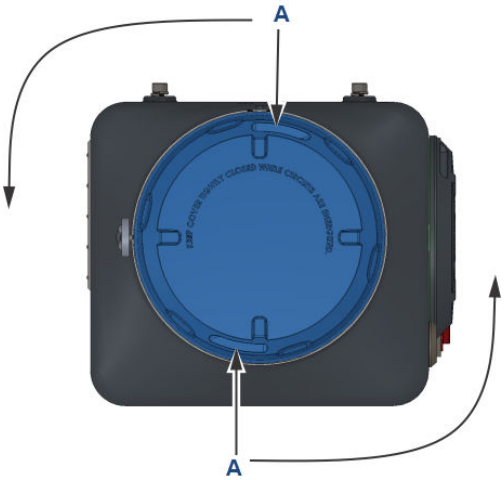

A. Grooves

⚠ CAUTION

The grooves are designed to aid you in loosening the dome.

Do not try to use them to tighten the dome.

7. Remove the insulation cap.

⚠ WARNING

HOT SURFACE

The oven is approximately 176 °F (80 °C) and hot to the touch.

8. Loosen the four 5/32-in. (4 mm) hex screws holding the module to the base.

⚠ WARNING

You may hear the release of some trapped carrier and sample gases.

If the release is continuous, confirm that the sample, calibration, carrier, and actuation gases are isolated.

9. Remove the four hex screws (A).

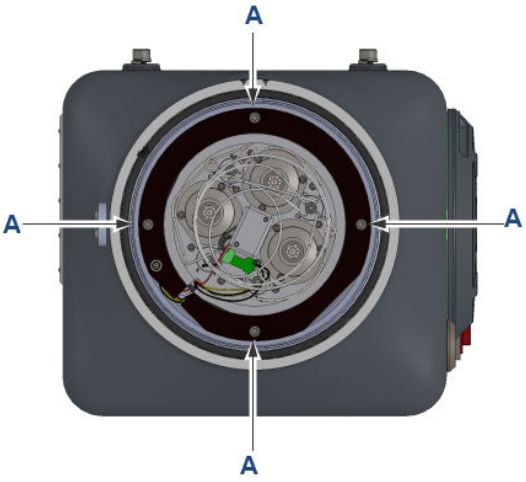

A. Hex screws

10. Grip the module base and carefully lift it off its housing.
11. While continuing to hold the module, disconnect the three connectors.
12. Discard the ten O-rings on the spring-action feed-through. Install new O-rings when a new or overhauled module is installed.

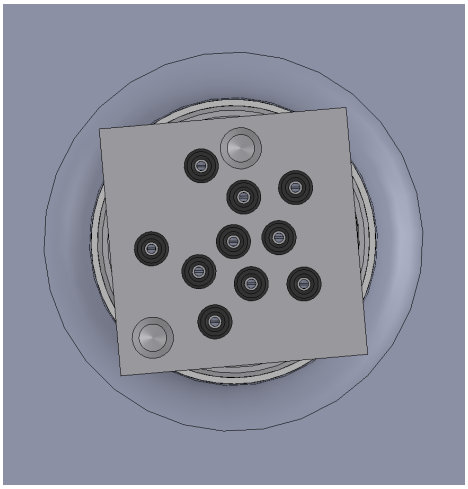

7.2 Install a Maintainable Module™

Prerequisites

Parts required	An analytical module and a pack of ten O-rings.
Tools required	A 5 mm hex or allen wrench.

Ensure that the power remains off, the various gases continue to be isolated external to the analyzer, and the dome remains off.

Procedure

1. Inspect the spring-loaded feed-through to ensure all the O-rings have been removed.

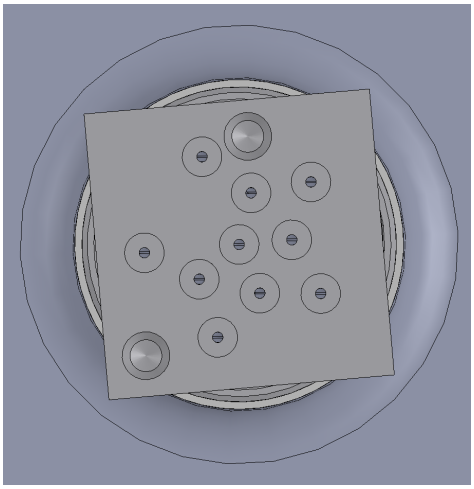

2. Install the new O-rings into the spring-loaded feed-through.

⚠ CAUTION

To ensure the proper and reliable operation of the analyzer, always use new O-rings supplied as a part. Never reuse O-rings or source them from third-party suppliers.

3. Inspect the under side of the new analytical module to ensure that there are no O-rings stuck to the module base.
4. Connect the solenoid electrical connector to the male connector leading to the solenoids.
5. Connect the male 18-pin signal connector to the connector on the IMB circuit board.
6. Connect the two-pin heater connectors.
7. Align the groove on the module base to the front of the analyzer and lower the module down onto the guide pins on the spring-loaded feed-through.
8. Insert the four module mounting screws and hand tighten.

9. To ensure the module is installed square, tighten the mounting screws in a cross-pattern as shown below.

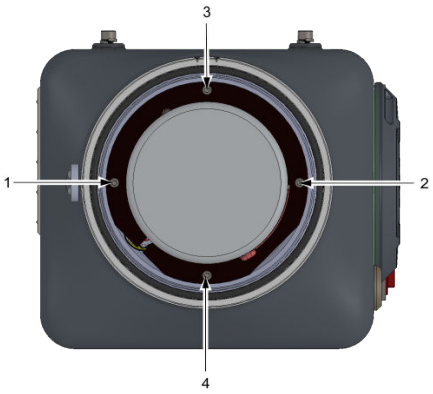

10. Place the insulation cap over the heater cap.
11. Open the actuation gas isolation valve.

Note
When opening the valves for the various gases to the GC, listen for leaks. If you hear a leak, isolate all of the gases and check that the O-rings in the spring-loaded feed-through are installed correctly.

12. Set the carrier gas supply pressure to 90 psig (6.2 BarG) and open the isolation valve on the carrier gas supply to the GC.
13. Set the calibration gas pressure to 15 psig (1 BarG) and open the isolation valve on the calibration gas supply to the GC.
14. Set the sample gas(es) pressure to 15 psig (1 BarG) and open the isolation valve to the GC.
15. Screw the dome over the analytical module and hand tighten.

⚠ CAUTION

EQUIPMENT DAMAGE

The hazardous area flame-path seal is a combination of the number of threads and the O-ring seal and does not rely on the dome being tightened excessively.

Therefore, do not over-tighten the dome, because this could result in difficulty when removing the dome at a later stage. Tightening the dome by hand to the end of the thread is all that is required.

16. Tighten the dome locking screw.
17. Power up the GC.

After the firmware starts running, the GC checks the serial number of the new module to determine if it matches the serial number of the module that was in place when the GC was shut down. If it does not, the analyzer starts the ***New Module*** software assistant. If the serial numbers do match, the analyzer warms up and stays in Idle mode.

8 Overhauling the analytical module

Figure 8-1: Maintainable Module™ - Exploded View

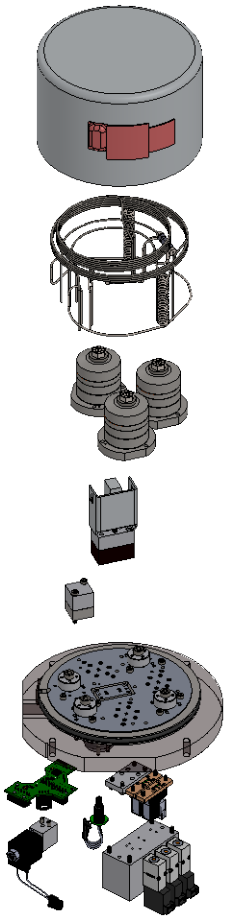

The following table lists the most common problems along with their solutions:

Table 8-1: Troubleshooting the Maintainable Module

Problem	Section
A single stream cannot be selected for analysis but other streams can, or one stream appears to be contaminating other streams.	Replace a stream selection solenoid.
An analytical valve is not actuating correctly.	Replace an analytical valve solenoid.
The retention times for the components have shifted later in the analysis run, or valve switching noise is excessive.	Overhaul the analytical valve. When overhauling the analytical valves, it is good practice to overhaul the sample shut-off valve as well.
The un-normalized total is erratic and fluctuates with changes in the sample pressure.	Overhaul the sample shut-off valve.

Table 8-1: Troubleshooting the Maintainable Module *(continued)*

Problem	Section
The module is contaminated by a large amount of liquids, or the response of the detectors has dramatically reduced.	Replace the detectors.
The analyzer has been exposed to significant contamination that resulted in a reduction in the separation of the components.	Replacing the chromatograph columns.
If the carrier gas pressure is not being controlled or there is excessive drift on the baseline,replace the carrier gas pressure control valve.	It may be difficult to diagnose whether the issue is with the pressure control valve or the pressure sensor, so Emerson recommends replacing both if there is a problem with the carrier gas pressure control.

8.1 Replace a stream selection solenoid

Prerequisites

Parts required	A replacement stream selection solenoid (#7C00023-001).
Tools required	A 2.5 mm hex or allen wrench.

This procedure assumes that you have removed the analytical module from the GC. If this is not the case, see Remove the Maintainable Module™.

Procedure

1. Turn the module upside down so that it is resting on its heater cap.
   The stream selection solenoids (the sample stream and the calibration stream are exposed.

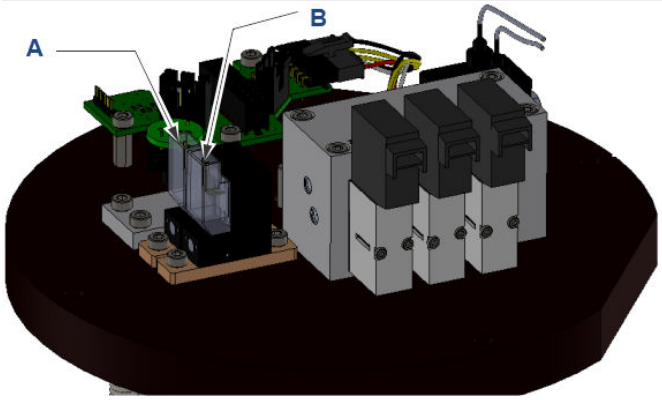

A. Sample stream
B. Calibration stream

2. Identify the solenoid(s) to be replaced.
3. Remove the electrical connector from the solenoid:

a) Squeeze the top of the connector.

b) Press the retention lever in.

c) Carefully pull the connector out.

4. Unscrew the two 2.5 mm hex screws.
5. Remove the solenoid and the seal.
6. Inspect the new solenoid's seal and ensure that it is firmly seated in the base of the solenoid.

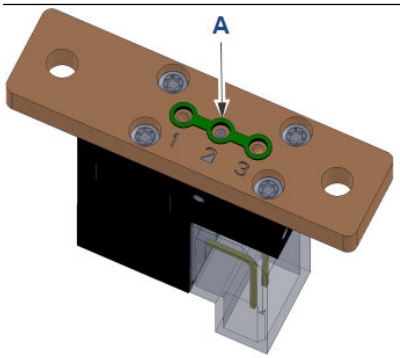

A. Seal

7. Place the solenoid onto the module base with the connector located closest to the module edge.
8. Tighten the two hex screws by hand to secure the solenoid.
9. Reconnect the connector to the solenoid, ensuring the retention clip engages. The connectors are labeled according to the following table:

Label	Solenoid
SV1	Calibration solenoid
SV2	Stream 1
SV3	Stream 2
SV4	Stream 3

10. Reinstall the module on the GC's base and analyze gas through each stream to confirm the repair has been successful.

8.2 Replace an analytical valve solenoid

Prerequisites

Remove the analytical module from the GC.

Procedure

1. Turn the module upside down so that it is resting on its heater cap.
   The analytical valve solenoids are exposed.

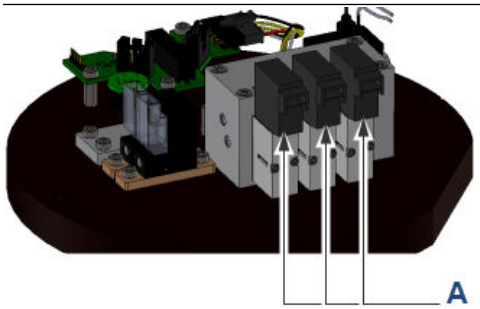

A. Analytical valve solenoid

2. Identify the solenoid(s) to be replaced.
3. Remove the electrical connector from the solenoid:
   a) Squeeze the top of the connector.
   b) Press the retention lever in.
   c) Carefully pull the detector out.
4. Use the Phillips-head screw-driver to unscrew the two solenoid retaining screws.
5. Remove the solenoid seal.
6. Inspect the new solenoid's seal and ensure that it is firmly seated in the base of the solenoid.
7. Use the mounting screws to hold the new seal in place.
8. Place the new solenoid on the manifold block and seat the two mounting screws.
9. Tighten the screws ½ turn by hand (torqued to between 0.18 to 0.25 Nm - 1.5 to 2.2 lb/in).

⚠ CAUTION

EQUIPMENT DAMAGE

Over-tightening the solenoid will result in the seal being squeezed out from between the solenoid and the manifold and loss of seal.

Only tighten the mounting screws ½ turn.

10. Reconnect the connector to the solenoid, ensuring the retention clip engages. The connectors are labeled according to the following table:

Valve label	Manifold label	Description
AV1	AV1	Sample valve
AV2	AV2	Back-flush valve
AV3	AV3	Dual column valve

11. Reinstall the module on the GC and run an analysis to confirm correct operation.

8.3 Overhaul the analytical valve

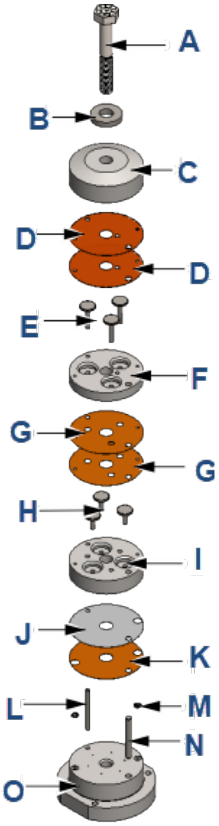

A. Hex bolt	F. Lower piston plate	K. Primary diaphragm
B. Flat washer	G Upper actuator diaphragms	L. Thin guide pin
C. Actuation cap	H. Short pistons	M. O-rings (2)
D. Lower actuator diaphragms	I. Upper piston plate	N. Thick guide pin
E. Long pistons	J. Cushion diaphragm	O. Actuation base plate

To maximize the time between repairs to the module, Emerson recommends overhauling all three analytical valves and the sample shut-off valve at one time, rather than repairing only a single valve when it is suspect.

⚠ CAUTION

Overhaul the valves in a clean environment. When removing the components from the valve, place them onto a clean work surface to avoid contaminating the valve components.

Prerequisites

Remove the analytical module from the PC.

Parts required	A valve overhaul kit for each valve to be serviced.
Tools required	• Vise with aluminum soft-jaws or some other protection to avoid marking the analytical valves with the vice jaws • 2.5 mm hex or allen wrench. • 7/16-in. (11 mm) socket and a socket wrench. • Torque wrench. • No-residue, evaporating electrical contact cleaner.

Procedure

1. Remove the heater cap from the module.
2. Remove the three hex screws holding down the analytical valve.

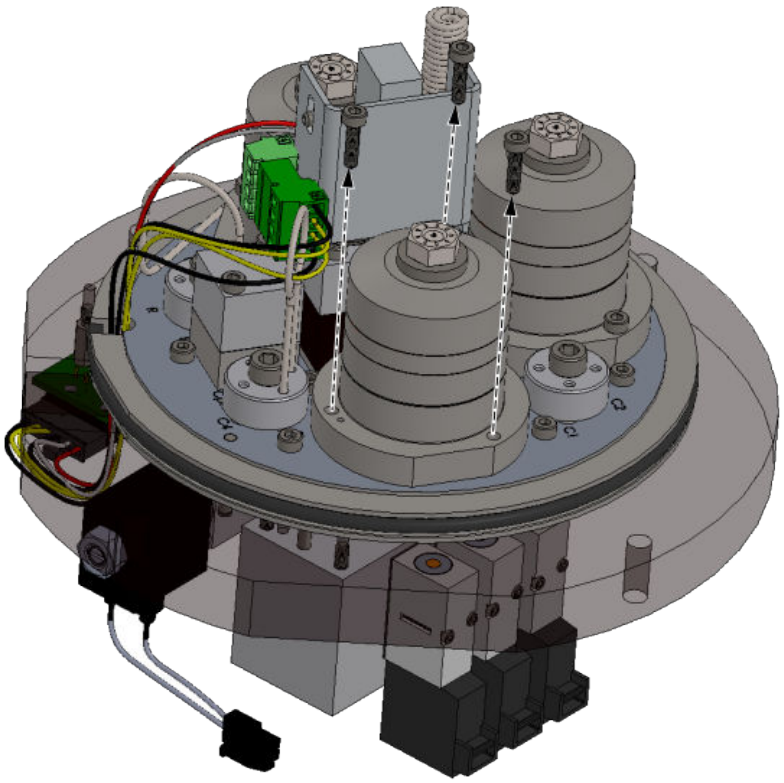

3. Remove the valve by carefully lifting it until it clears the locating pins on the module base.

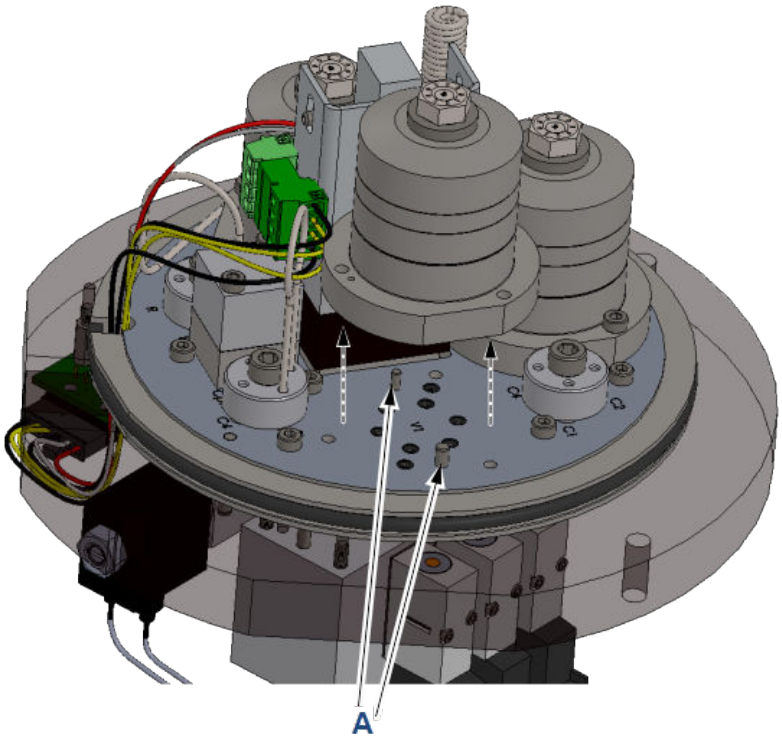

A. Locating pins

4. Remove the eight O-rings from the base of the module and dispose of them.

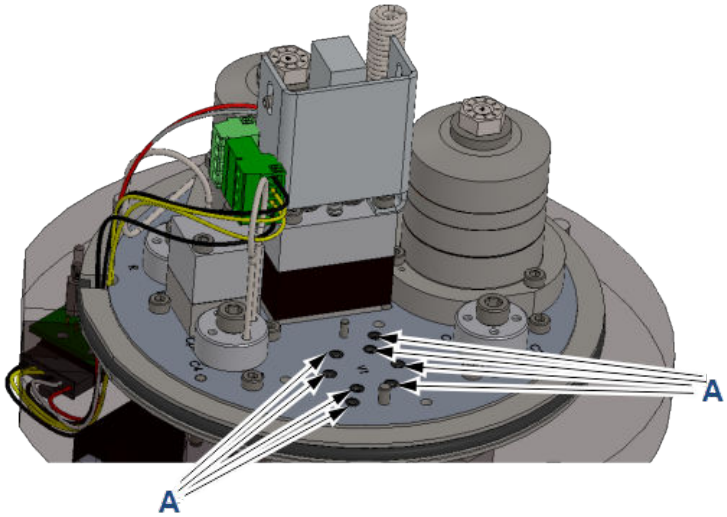

A. O-rings

5. Place the analytical valve in the vice, clamping onto the flat edges of the valve's base.
6. Use the socket wrench and socket to remove the valve's center hex bolt.

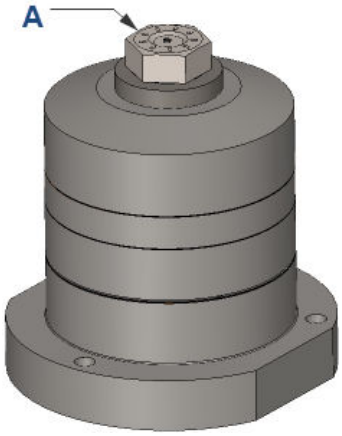

A. Hex bolt

7. Remove the flat washer (A).

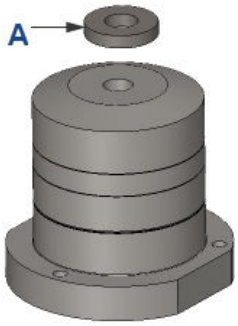

A. Flat washer

8. Remove the actuation cap plate.

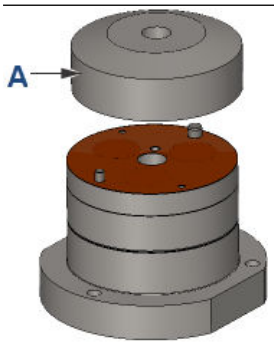

A. Actuation cap plate

9. Remove and dispose of the two upper actuation diaphragms.

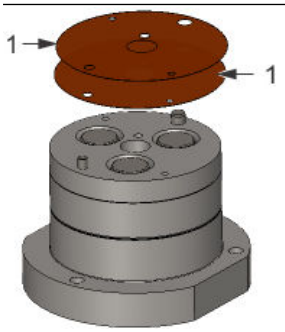

A. Upper actuation diaphragms

10. Remove the upper piston plate and the three long pistons as one assembly.

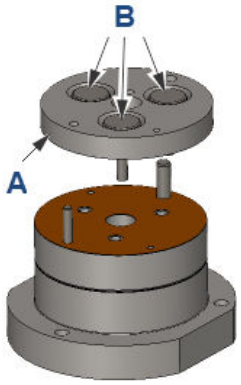

A. Upper piston plate
B. Pistons

11. Remove the two lower actuation diaphragms and discard them.

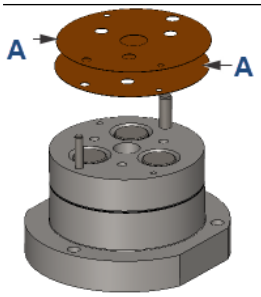

A. Lower actuation diaphragms

12. Remove the lower piston plate and the three short pistons as one assembly.

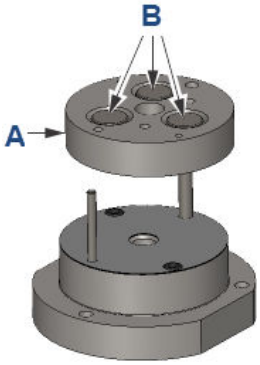

A. Lower piston plate
B. Pistons

13. Remove and discard the cushioning diaphragm, the primary diaphragm, and the two O-rings.

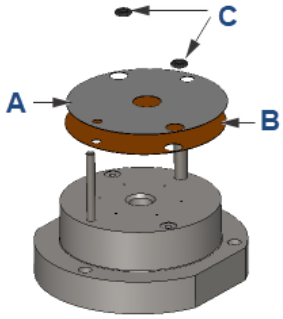

A. Cushioning diaphragm
B. Primary diaphragm
C. O-rings

14. Remove the two guide pins.

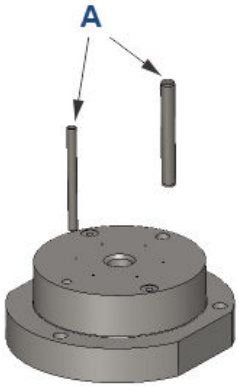

A. Guide pins

15. Use a clean and lint-free cloth to remove any residue clinging to the upper sealing surface of the base plate.
16. Spray the electrical contact cleaner through each of the ports of the base plate, ensuring a clean, unobstructed flow through each port.
17. Clean the upper sealing surface of the base plate with the electrical contact cleaner.
18. Blow down the base plate with clean and dry air.
19. Return the two guide pins to the valve's base.

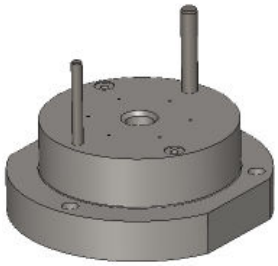

20. Place an O-ring over each actuation gas port hole.
    The holes are located on the actuation base plate.

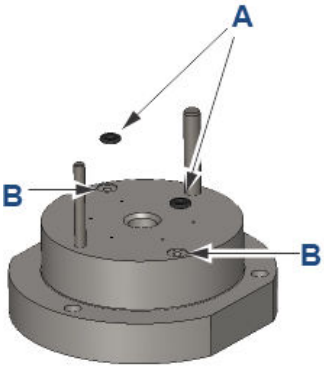

A. O-ring
B. Port hole

21. Place the primary diaphragm, which has four holes, so that the holes in the diaphragm align with the two guide pins and the two actuation gas ports with the O-rings.

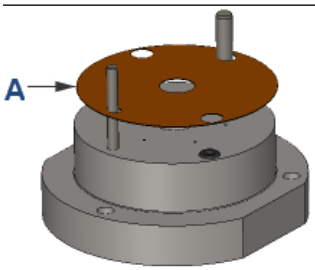

A. Primary diaphragm

22. Place the cushioning diaphragm onto the primary diaphragm so that the diaphragm's holes align with the holes of the primary diaphragm.

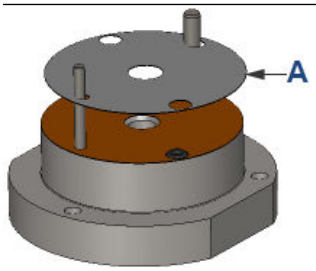

A. Cushioning diaphragm

23. Place the upper actuation plate over the actuation base plate with the upper actuation plate's short pistons pointing down. The pistons should be flat with the top of the piston plate.

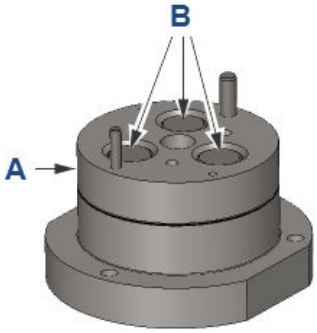

A. Upper actuation plate
B. Short pistons

24. Place the two upper actuation diaphragms over the upper actuation plate so that the diaphragms' holes align with the holes in the upper actuation plate.

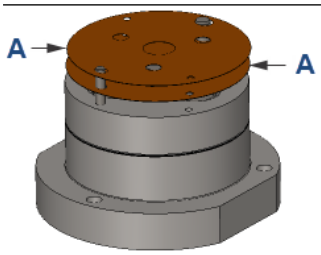

A. Upper actuation diaphragms

25. Place the lower actuation plate onto the upper actuation plate with the lower actuation plate's long pistons pointing down.

    The pistons should be flat with the top of the piston plate.

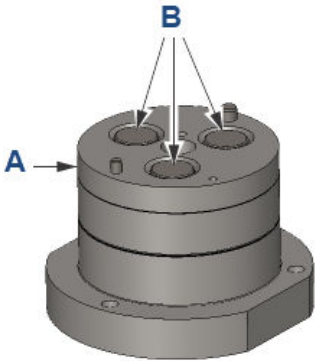

A. Upper actuation plate
B. Long pistons

26. Place the two lower actuation diaphragms over the lower actuation plate so that the diaphragms' holes align with the holes in the lower actuation plate.

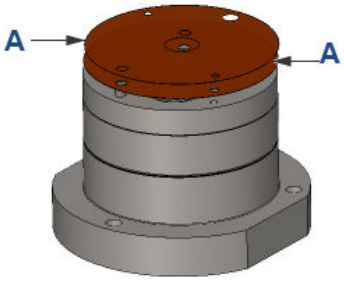

A. Lower actuation diaphragms

27. Place the actuation cap over the lower actuation plate.

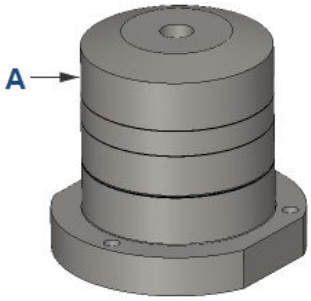

A. Actuation cap

28. Insert the hex bolt with its flat washer into the assembled valve's center hole and hand-tighten.

Note
The washer is slightly curved and should be placed so that it curves up to the center.

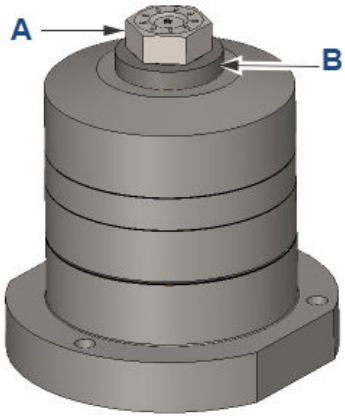

A. Hex bolt
B. Flat washer

29. Use a torque wrench and 11 mm socket to tighten the hex bolt to 20 ft./lb. (2.76 kg/m).
30. Set the new O-rings into the actuation valve ports on the module base plate.
31. Insert the three socket screws into the holes of the analytical valve base plate.
32. Align the thick and thin locating pins in the base plate with the locating holes in the analysis valve and install the analysis valve onto the base plate.
33. Tighten the socket screws with the 2.5 mm hex or allen wrench.

8.4 Overhaul the sample shut-off valve

Prerequisites

Remove the analytical module from the GC.

Parts required	Sample shut-off valve overhaul kit (#7A00TBA).
Tools required	• 2.5 mm hex or allen wrench. • No-residue, evaporating electrical contact cleaner.

Overhaul the sample shut-off valve in a clean environment. When removing the components from the valve, place them onto a clean work surface to avoid contaminating the valve internals.

Procedure

1. Remove the heater cap from the module.
2. Use the 2.5 mm hex or allen wrench to remove the two mounting screws (B) on the sample shut-off (SSO) valve (A).

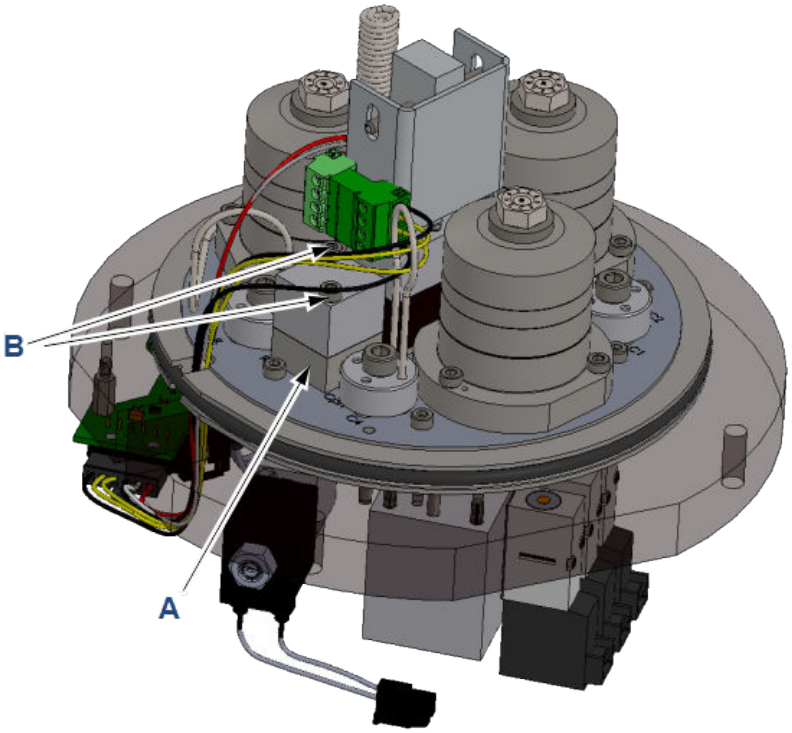

A. Sample shut-off valve
B. Mounting screws

3. Remove the two parts of the SSO valve (A) from the module and the locating pin (B).

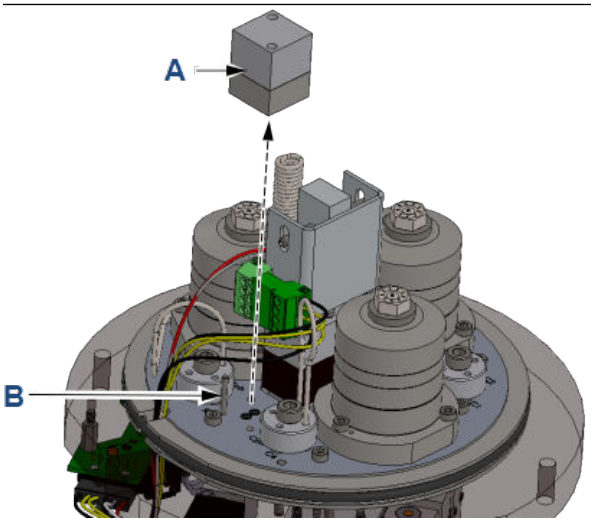

A. SSO valve
B. Locating pin

4. Discard the three O-rings (A) from the module base.

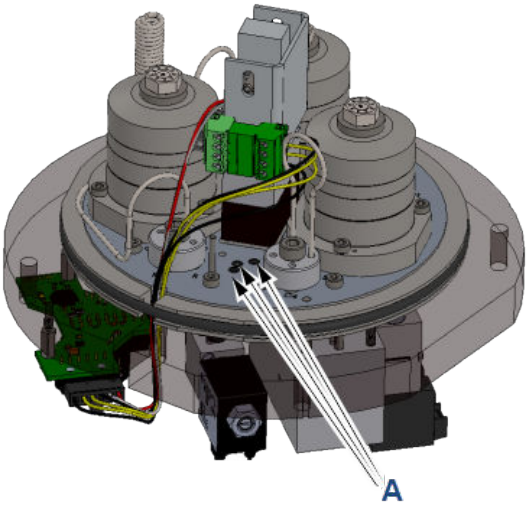

A. O-rings

5. Remove the locating pin and separate the upper and lower plates of the SSO valve.

6. Remove and discard the small O-ring (C), the large O-ring (B), and the diaphragm (D) from the interior of the SSO valve (A).

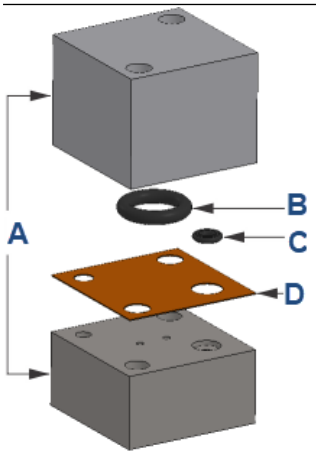

A. SSO valve
B. Large O-ring
C. Small O-ring
D. Diaphragm

7. Use the electrical contact cleaner to cleanse the sealing surface of the lower plate (A) and the two sample flow holes (B) through the lower plate.

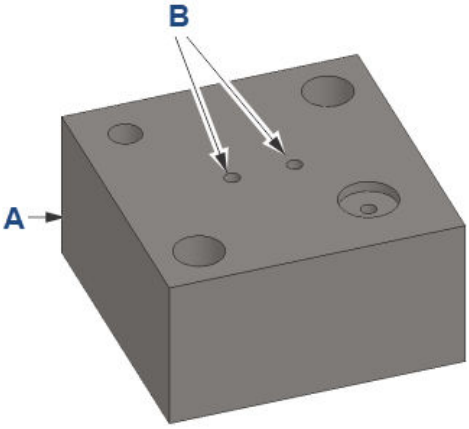

A. Lower plate
B. Sample flow holes

8. Blow down the lower plate with clean and dry air.

9. Set one of the small O-rings from the kit into the actuation gas path recess (B) on the lower plate (A).

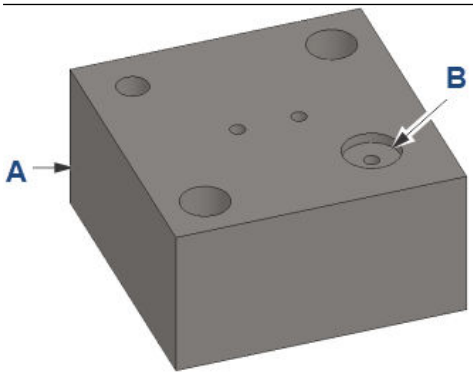

A. Lower plate
B. Actuation gas path recess

10. Turn the upper plate (A) upside down and set the large O-ring (C) from the kit into the recess (B) of the upper plate.

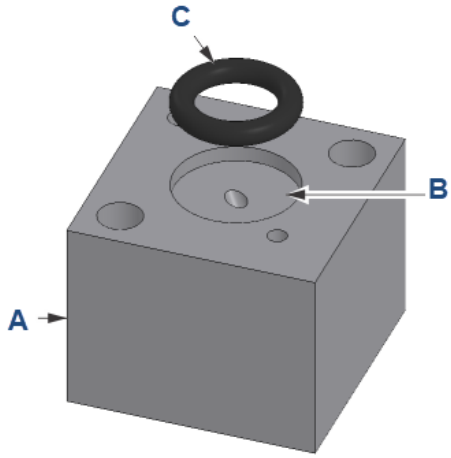

A. Upper plate
B. Recess
C. Large O-ring

11. Place the remaining three small O-rings from the kit on the SSO valve's sample and actuation gas paths (A) on the module base.

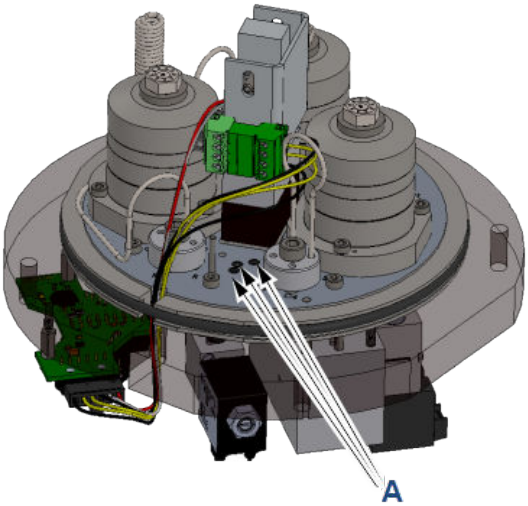

A. Sample and actuation gas paths

12. Insert the locating pin into the module base.
13. Turn the lower actuating plate so that its O-ring is face up and then slide the lower actuating plate over the locating pin and into place on the module base.
14. Place the SSO diaphragm from the kit onto the lower plate and align the diaphragm's holes with the holes in the lower plate.
15. Slide the upper plate over the locating pin and align the upper plate's mounting holes with the holes in the lower plate.
16. Insert the two mounting bolts and tighten with the 2.5 mm hex or allen wrench.

8.5 Replace the carrier pressure control valve

Prerequisites

Parts required	• Carrier pressure control valve kit (#7C00024-001 or #7C00024-02) • 2 sets of O-ring kits (#7C00030-006)
Tools required	2.5mm hex or allen wrench.

The following table indicates which carrier pressure control valve you need according to your module.

Module number	Module description	Pressure control valve
7A00136G04	Replacement Maintainable Module™ kit, C6+, 3 stream + calibration (white)	7C00024-002
7A00136G05	Replacement Maintainable Module kit, C6+, GOST 12 minutes, 3 stream + calibration (white)	7C00024-002

Module number	Module description	Pressure control valve
7A00136G06	Replacement Maintainable Module kit, C6+, OIML, 3 stream + calibration (brown)	7C00024-001
7A00136G07	Replacement Maintainable Module kit, C6+, measurement Canada, 3 stream + calibration (white)	7C00024-002
7A00136G08	Replacement Maintainable Module kit, C7+, 3 stream + calibration (white)	7C00024-002
7A00136G09	Replacement Maintainable Module kit, C6+, GOST 4 minutes, 3 stream + calibration (white)	7C00024-002
7A00136G10	Replacement Maintainable Module kit, C6+, OIML, 3 stream + calibration (white)	7C00024-002
7A00136G11	Replacement Maintainable Module kit, C6+, OFGEM, 3 stream + calibration white)	7C00024-002
7A00136G12	Replacement Maintainable Module kit, C6+, Engas, 3 stream + calibration (brown)	7C00024-001
7A00136G13	Replacement Maintainable Module kit, C6+, LNE, 3 stream + calibration (brown)	7C00024-001
7A00136G14	Replacement Maintainable Module kit, C6+, Kazakhstan 12 minutes, 3 stream + calibration (white)	7C00024-002
7A00136G15	Replacement Maintainable Module kit, C6+, Kazakhstan 4 min, 3 stream + calibration (white)	7C00024-002

Procedure

1. Rest the module upside down on the heater cap.

2. Unclip the electrical connector leading to the carrier pressure control valve.

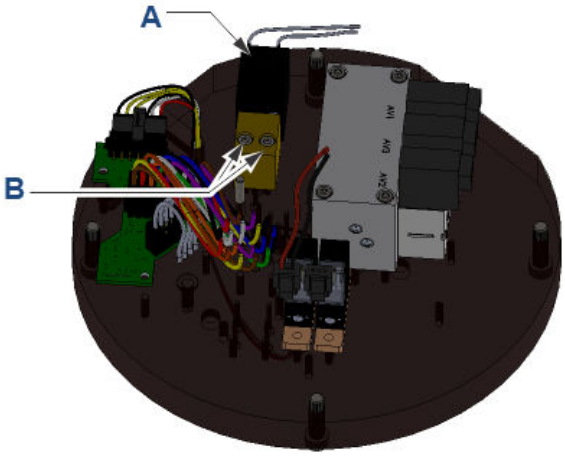

   a. Carrier pressure control valve
   b. Mounting bolts

3. Use a 2.5 mm hex wrench to remove the two carrier pressure control valve mounting bolts.
4. Carefully lift off the carrier pressure control valve.
5. Remove and dispose of the two O-rings in the module base.

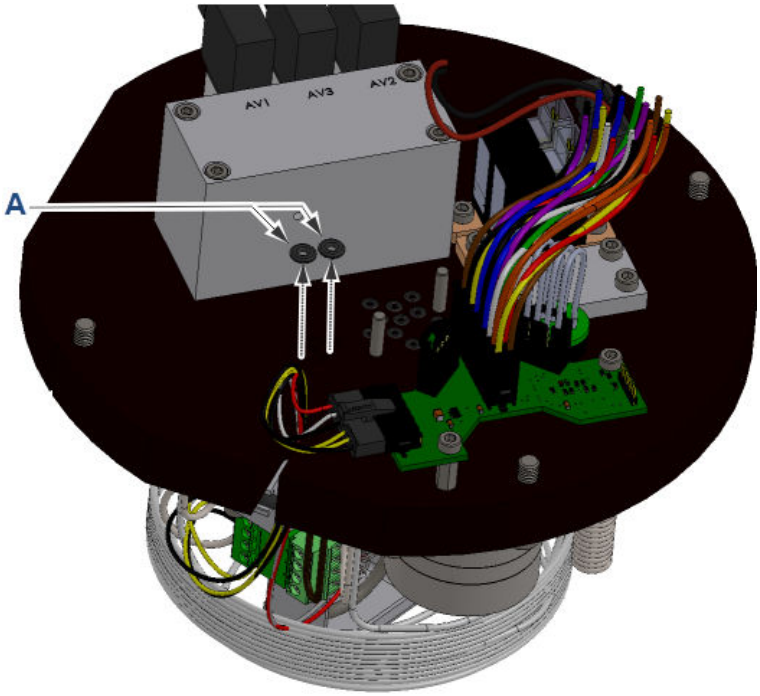

   a. O-rings

6. Install the new O-rings into the module base.

7. Use the 2.5 mm hex wrench to screw the new carrier pressure control valve onto the module.

   Do not over-tighten.

8. Reconnect the electrical connector and ensure the retention clip is engaged.

8.6 Replace the carrier gas pressure sensor

Prerequisites

Parts required	Carrier gas pressure sensor kit (#7A00053G01).
Tools required	• 2.5 mm hex or allen wrench • 8 mm wrench

Procedure

1. Rest the module upside down on the heater cap.
2. Disconnect the carrier gas pressure sensor's (A) electrical connectors (C) from the Intelligent Module Board (B).

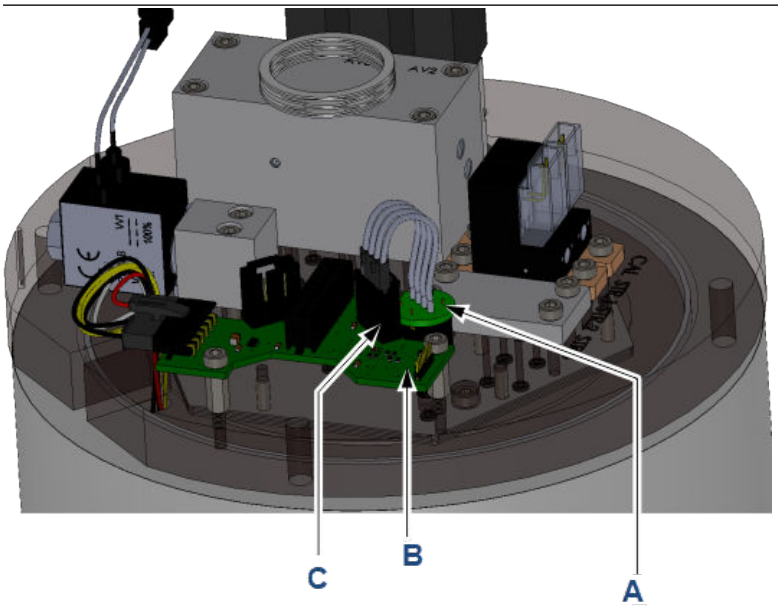

A. Carrier gas pressure sensor
B. Intelligent Module Board (IMB)
C. Electrical connectors

3. Use the 2.5 mm hex wrench to remove the IMB.
4. Use the 8 mm wrench (or small adjustable wrench) to gently unscrew the pressure sensor from the module base.
5. Check that the O-ring was removed with the sensor. If it was not, remove and dispose of the O-Ring.

6. Carefully hand-tighten the new sensor into the module base.
7. Use the 8 mm wrench (or small adjustable wrench) to carefully tighten the sensor by a half-turn.

   Do not over-tighten.
8. Use the 2.5 mm hex wrench to reinstall the IMB.
9. Reconnect the electrical connectors into the IMB.

8.7 Replace the detectors

Prerequisites

Remove the analytical module from the GC.

Parts required	Detector overhaul kit.
Tools required	• 2.5 mm hex or allen wrench • 1 mm hex or allen wrench • 8 mm open-ended wrench

Important
Always replace the detectors as a pair.

Perform this procedure in a clean environment. When removing the components from the valve, place them onto a clean work surface to avoid contaminating the valve components.

Procedure

1. Remove the heater cap from the module.

2. Disconnect the detector's electrical connector (B) from the intelligent module board (A), which is located on the under side of the Maintainable Module™.

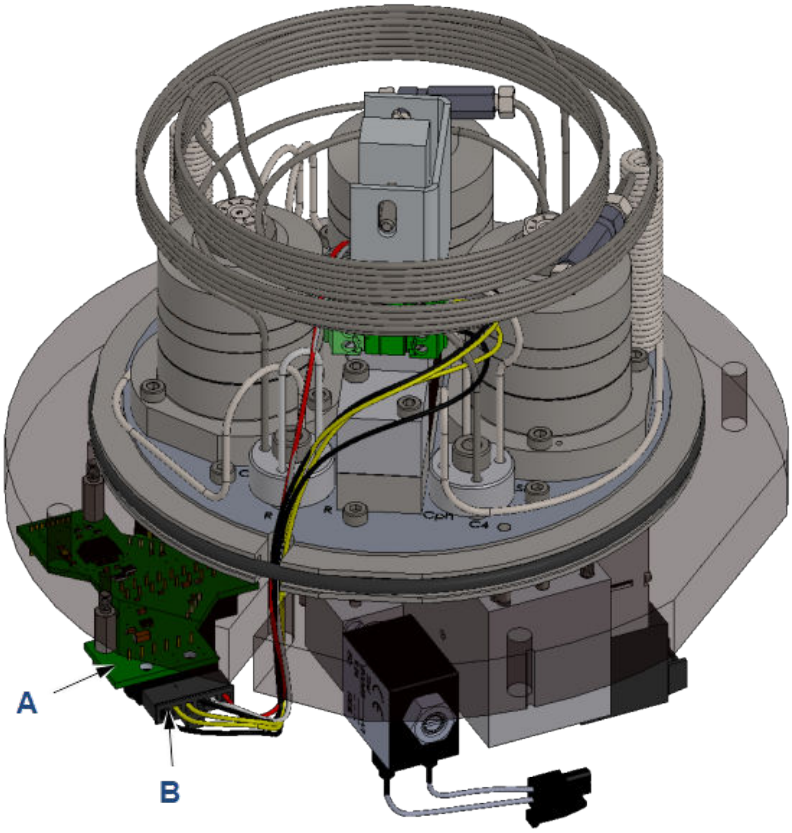

A. Intelligent module board (IMB)
B. Electrical connector

3. Remove the large O-ring (A) from around the module base to enable the cables from the detector assembly to move freely.

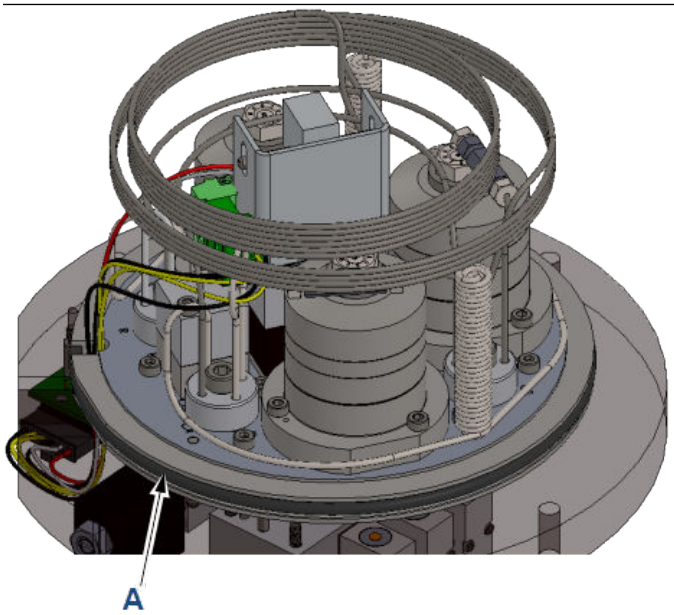

A. Large O-ring

4. Pull the cables up through the middle of the columns so that they will not interfere with removing the detector assembly.

5. Remove the two TCD block mounting screws (A).

   Do not remove the two heat-pipe cover screws (B) because the cover will be used to pull off the detector assembly.

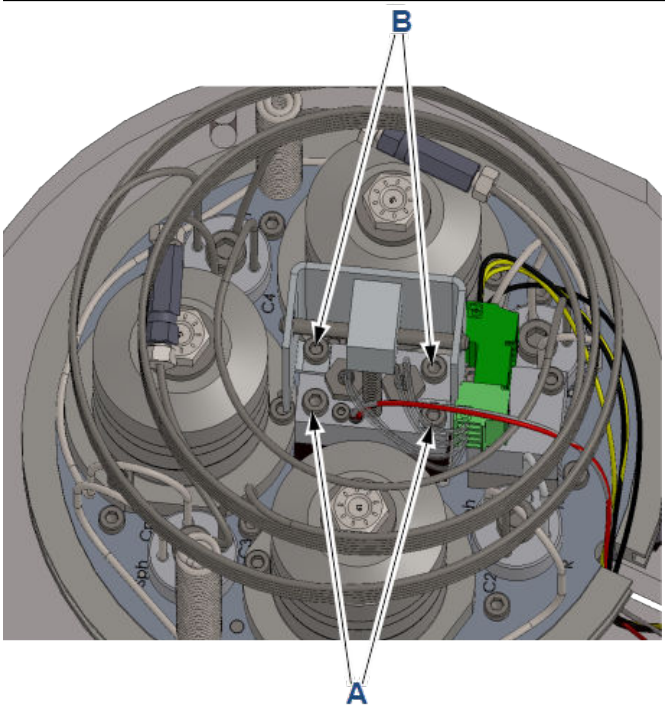

A. TCD block mounting screws
B. Heat-pipe cover screws

6. Remove the detector assembly by gently pulling up with a small rocking motion on the heat-pipe bracket.

⚠ CAUTION

EQUIPMENT DAMAGE

If you remove the heat pipes, you may bend them, which will reduce their performance.

One or both of the heat-pipes may stay in the base plate. Do not try to remove them.

7. Discard the two O-rings on the detector block.
8. Use the 2.5 mm hex or allen wrench to remove the two heat-pipe cover retaining screws and then lift off the heat-pipe cover.
9. If the detector assembly still contains any heat-pipes, carefully twist and pull them out.

⚠ CAUTION

EQUIPMENT DAMAGE

The thermal performance of the heat pipe and the analytical performance of the GC will be greatly reduced if the heat pipe is damaged or bent excessively.

10. Use the 8 mm open-ended wrench to unscrew the two detectors and then remove them.
11. Unscrew and remove the detector wires from the detector connector, noting which detector wire goes into which terminal.
12. Use the 1 mm hex or allen wrench to remove the PTFE seals that are in each of the detector recesses. Discard the PTFE seals.
13. Use electrical contact cleaner to cleanse the sealing surfaces and the two sample flow holes that run through the detector assembly.
14. Blow down the detector assembly with clean and dry air, nitrogen, or helium.
15. Insert a new PTFE seal into the bottom of each of the detector recesses. Ensure that each seal is flat on the sealing edge at the base of the recess.
16. Screw the detectors into the detector assembly. Tighten the screws with the 8 mm open-ended wrench.
17. Insert the detector wires into their corresponding terminals.

    You should have noted this in Step 11.
18. If any heat pipes were removed from the detector assembly, reinsert them into the detector block.
19. Place the heat-pipe springs over the heat pipes.
20. Re-install the heat pipe cover and tighten the screws by hand until the base of the bracket is tight against the detector assembly.
21. Lightly coat the exposed ends of the heat pipes with thermal compound.
22. Press two new O-rings into the detector base, ensuring that they are packed tightly in the recesses to form tight ovals.
23. Orient the module so that the groove on the base is facing you. Place the detector assembly onto the detector block with the resistance temperature device (RTD) and cables on the left.
24. If a heat pipe remained in the base when the detector was removed, reinstall the spring over the heat pipe as the detector assembly is put into place.
25. Hand tighten the detector's two mounting screws with a 2.5 mm hex or allen wrench.
26. Ensure that the heat pipe cap is moving freely and is at the full extension.
27. Route the cables under the columns and through the cable entry groove on the left of the module.
28. Reinstall the large O-ring around the module's top-plate so that the cables are held into the cable entry groove.
29. Plug the connector into the IMB board.
    There should be an audible click when the clip is engaged.

8.8 Replacing the chromatograph columns

Parts required	Rosemount 370XA C6+ 4-minute column set (# 7A00101G01).
Tools required	4 mm hex or allen wrench

Only replace the chromatograph columns as a set. The tubing connectors use a unique double o-ring sealing arrangement. Only loosen the bolt on the tubing connectors to facilitate removing the columns; do not remove it unless you are replacing the O-rings.

8.8.1 Install chromatograph columns

Procedure

1. Use the 4 mm hex or allen wrench to loosen each of the tubing connector bolts by a ½ turn only.

   Note
   Do not remove the bolt from the tube connector fitting, because the O-rings and spacers will come out of the fitting.

2. Carefully pull each column end from the tubing connectors.
3. Discard the old columns.
4. Install the new columns:
   a) Insert each column into the appropriate connectors according to the markings on the manifold plate and the tag on the column.

      See Column assignments and Column drawings for help matching the column with the column connectors.

b) Push the tube (A) into the connector (B) until it meets resistance and is fully inserted into the connector.

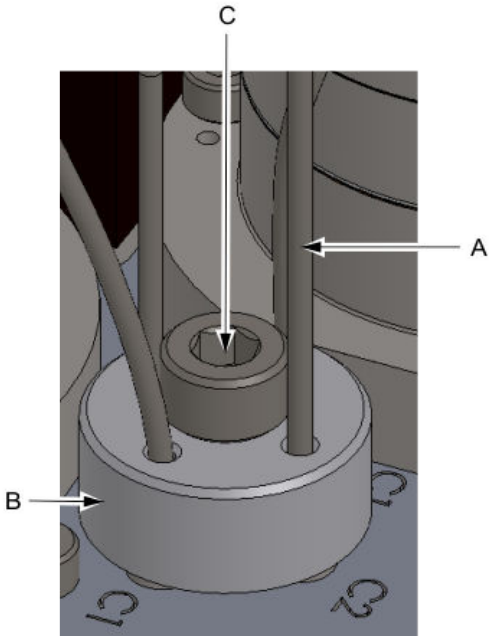

A. Tube
B. Connector
C. Connector bolt

c) When all of the tubing for a single connector is inserted, tighten the connector bolt (C) with the 4 mm hex or allen wrench.

Note
If the connectors are not tightened correctly, there is the potential for a leak. The tubing must go through both O-rings. It is important to follow the procedure and check the fitting before applying gas to the unit.

d) Carefully pull each tube entering the fitting to ensure that it is held by both O-rings.

If a tube is not held by both O-rings, it will pull out easily, and you will need to loosen the bolt and repeat the procedure until all four tubes are sealed by the dual O-rings.

8.8.2 Column assignments

Tubingconnector 1		Tubing connector 2		Tubing connector 3		Tubing connector 4	
C2	Column 2	Sph	Sample pre-heat coil	Sph	Sample pre-heat coil	SL	Sample loop
C1	Column 1	Cph	Carrier pre-heat coil	R	Restrictor column	SL	Sample loop
C4	Column 4	C2	Column 2	R	Restrictor column	C4	Column 4
C1	Column 1	C3	Column 3	C2	Column 2	Cph	Carrier preheat coil

8.8.3 Column drawings

Use the drawings that follow to match the column with the column connectors.

Figure 8-2: Column 1

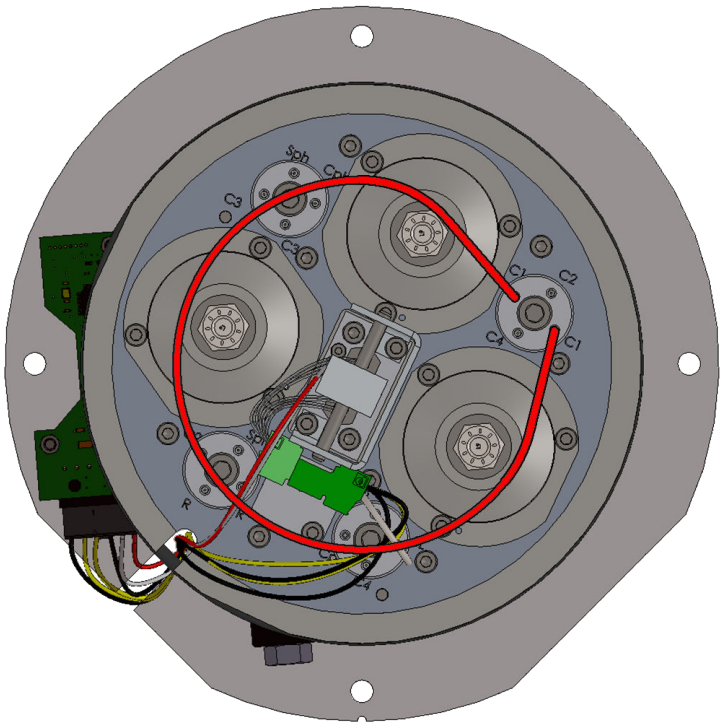

Figure 8-3: Column 2

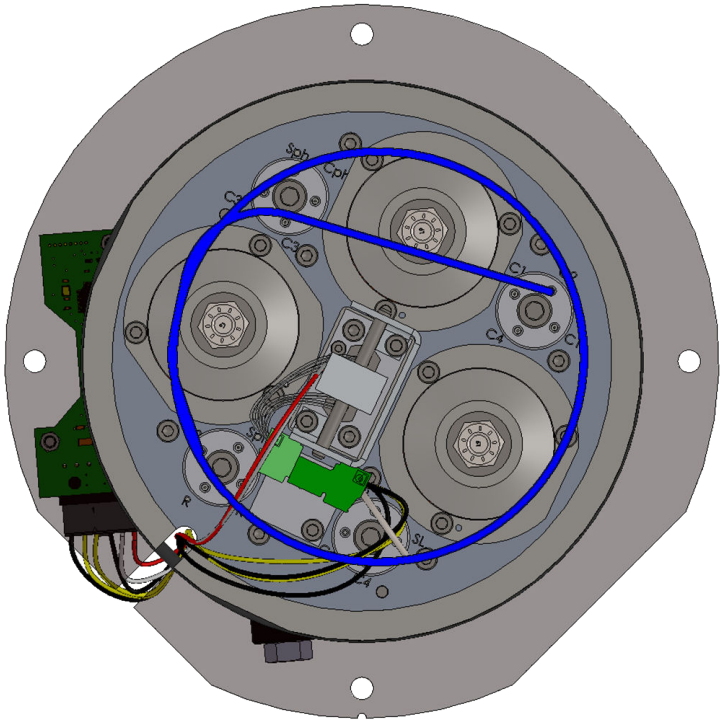

Figure 8-4: Column 3

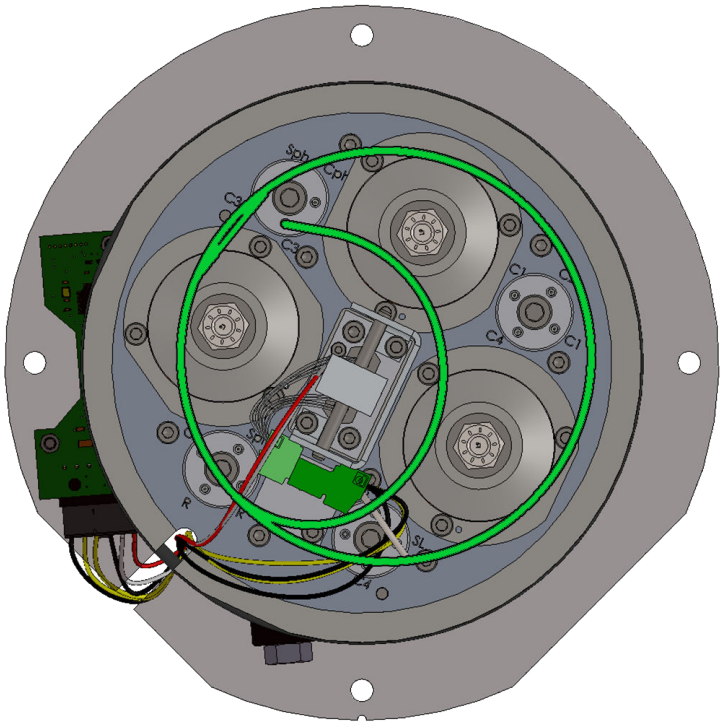

Figure 8-5: Column 4

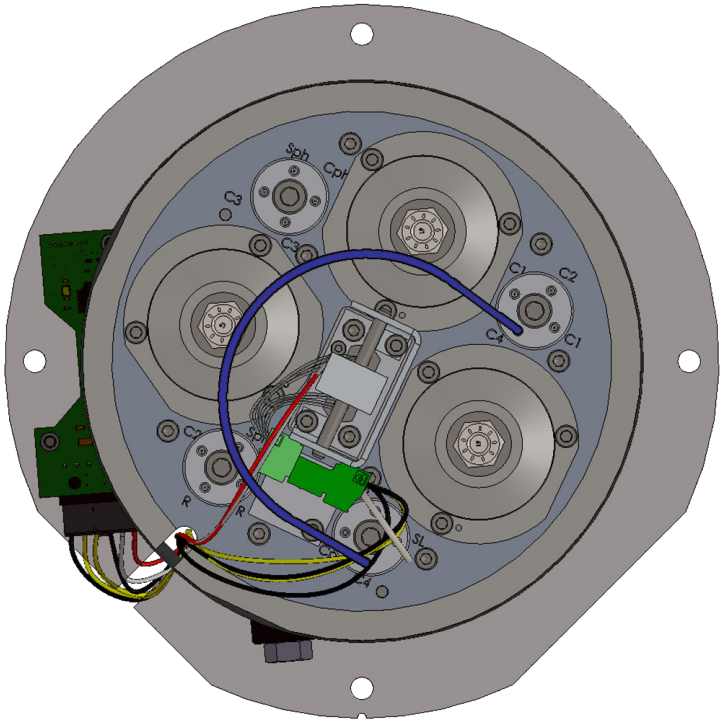

Figure 8-6: Sample Pre-Heat Coil (Sph)

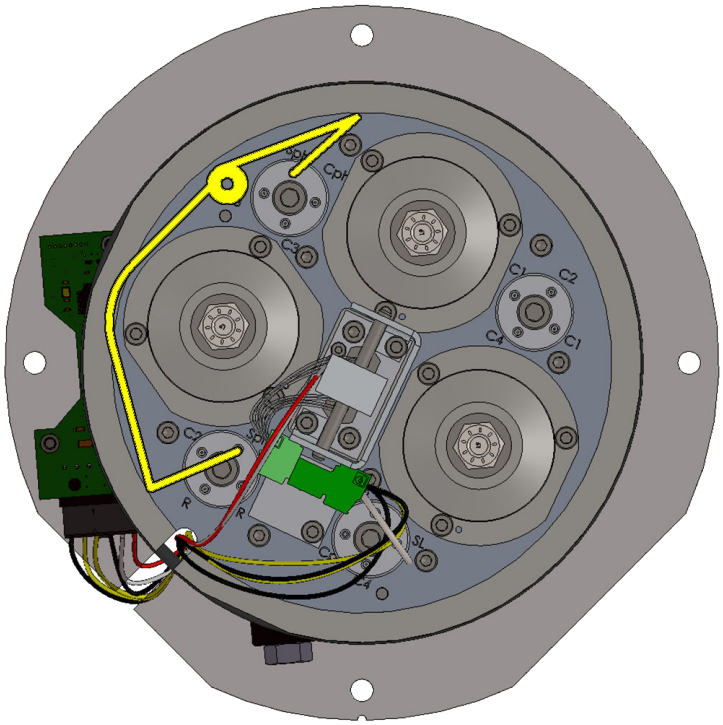

Figure 8-7: Carrier Pre-Heat Coil (Cph)

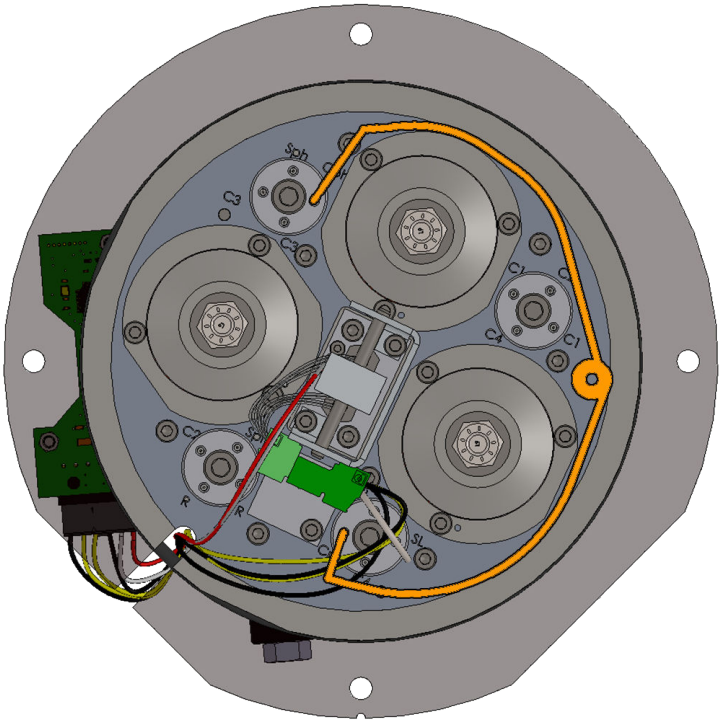

Figure 8-8: Sample Loop (SL)

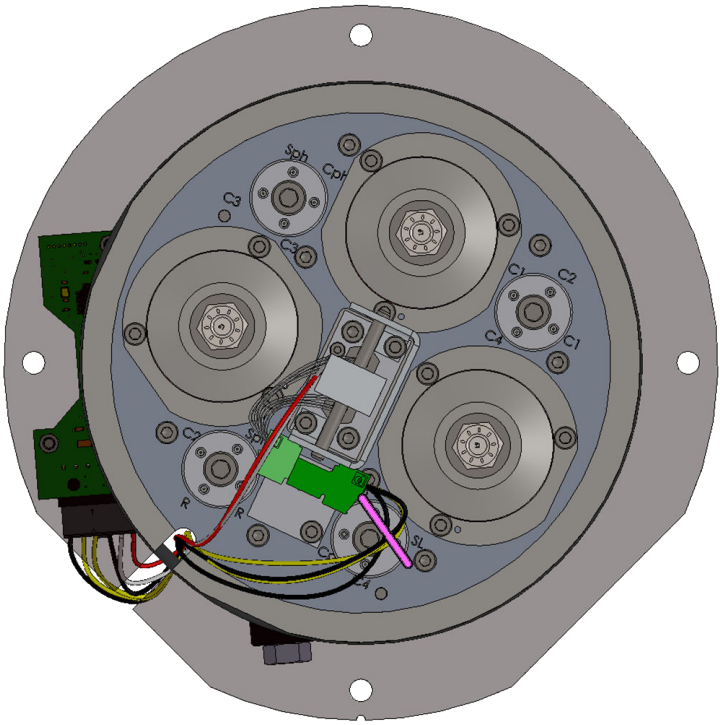

Figure 8-9: Restrictor Column (R)

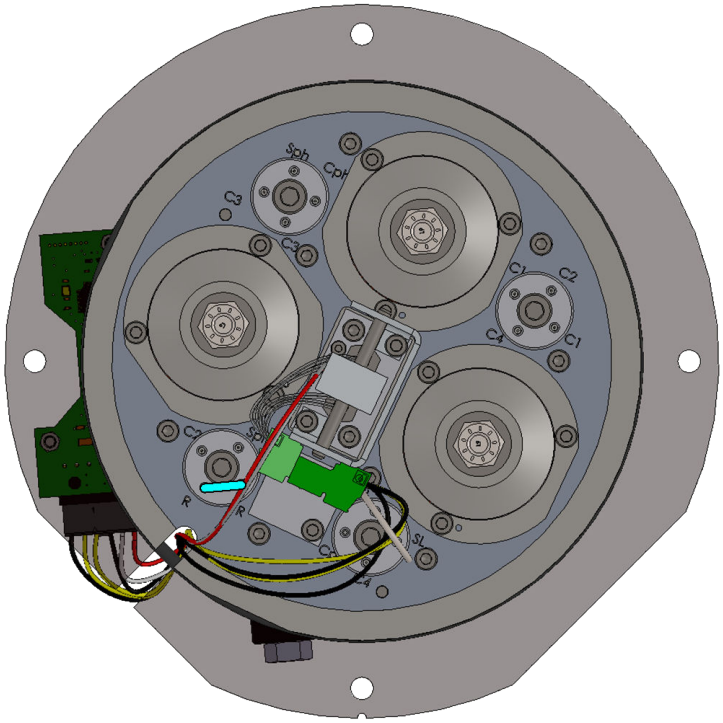

Figure 8-10: Completed Installation

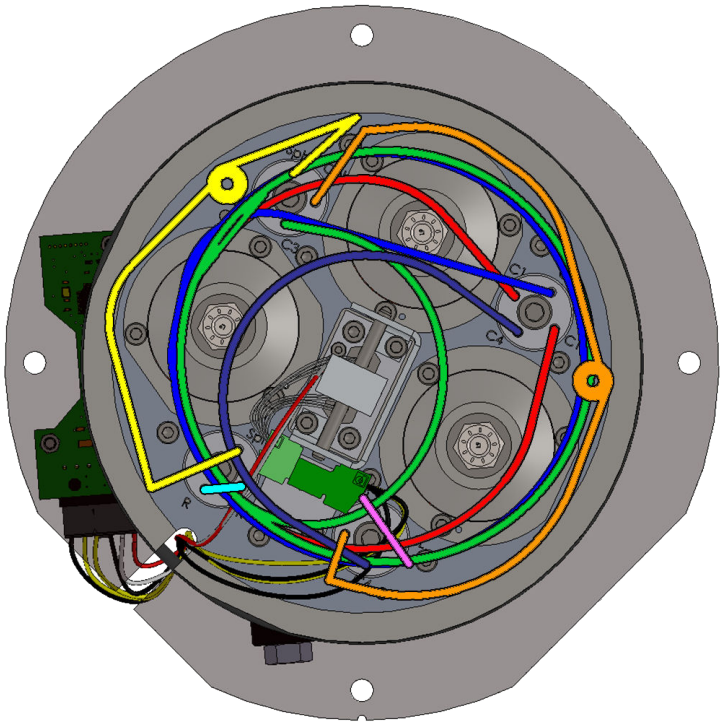

8.9 Replace the O-rings in a tubing connector

Prerequisites

Parts required	1 packet of replacement O-rings (# 7C00030-006).
Tools required	4 mm hex or allen wrench

Procedure

1. Use a 4 mm hex wrench to loosen the tubing connector bolt (A) by a ½-turn.

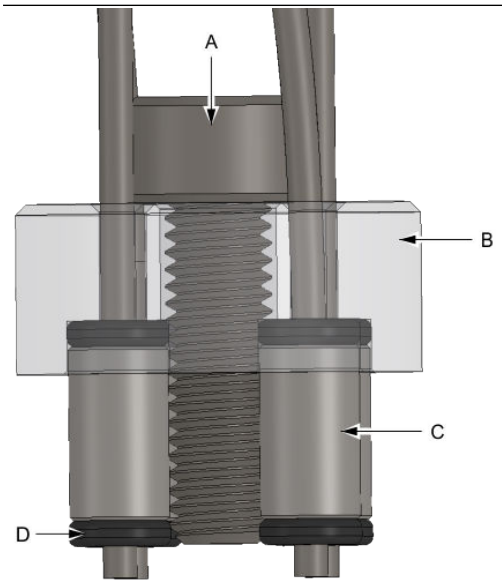

A. Tubing connector bolt
B. Tubing connector
C. O-ring spacers
D. O-rings

2. Pull each of the four tubes out of the connector.
3. Remove the tubing connector bolt (A).
4. Remove the tubing connector (B).
5. Remove and dispose of the four upper O-rings.
6. Remove the four O-ring spacers (C).
7. Remove and dispose of the four lower O-rings. If the O-rings stick inside the base plate, use a short length of 1/16th stainless tube to work the O-ring out.
8. Place a new O-ring into each of the four tubing holes in the base plate.
9. Insert a new spacer into each of the four holes in the baseplate, firmly pushing them down until the O-ring from the previous step is seated into the bottom. Check that the top of each of the spacers is protruding the same distance as the other spacers to ensure each O-ring is seated flat.

10. Place a new O-ring on top of each of the four spacers, loosely aligning the center hole of the O-ring with the center hole of the spacer.
11. Place the tube connector over the O-rings and spacers, ensuring the holes in the cap align with the O-rings and spacers.
12. Screw in the mounting bolt and hand-tighten.
13. Insert the columns into the connector according to Column assignments and Column drawings.

    Each of the columns has tags that identify its application.

    ⚠ CAUTION

    If the connectors are not tightened correctly, there is the potential for a leak.

    Ensure that the tubing goes through both of the two O-rings as shown in Step 1. It is important to follow the procedure and check the fitting before applying gas to the unit.

14. Push each tube into the fitting so until it stops hard against the base plate.
15. Apply downward pressure onto the four tubes entering the fitting and tighten the bolt using the 4 mm hex or allen wrench.
16. Carefully pull each tube entering the fitting to ensure that it is held by both O-rings.

    If a tube is not held by both O-rings, it will pull out easily, and the bolt will need to be loosened and the procedure repeated from Step 14 until all four tubes are sealed by the dual O-rings.

9 Troubleshooting

9.1 Alarms

The following alarms may appear on the Rosemount 370XA .

9.1.1 Maintenance Mode

The Maintenance mode is on. The flag in the Modbus® map for Maintenance mode is switched on, and the discrete out for activating the common alarm (if configured) is on.

Recommended action

Refer to Maintenance mode for more information.

9.1.2 Power Failure

The 24 Vdc power supply to the GC failed.

Note
The SET time indicates the time power was restored to the GC.

Recommended action

To determine when the power was lost, look at the time of the last analysis before the power fail occurred.

9.1.3 User Calculation Failure

An error occurred in one of the user-defined calculations.

Recommended action

Check the user calculations for divide by zero errors or for incorrect references.

9.1.4 Low Battery Voltage

The CPU battery voltage is low.

Recommended action

The battery is soldered onto the CPU board; contact the factory to replace the CPU board.

9.1.5 Stream Skipped

There was an error in stream sequencing that resulted in failure to analyze one of the streams in the stream sequence. This alarm will occur if someone switches the stream's usage to Unused without removing the stream from the stream sequence.

Recommended actions

1. IN MON2020, select **Stream Sequence** from the *Application* menu.
2. Delete the unused stream from the sequence.

9.1.6 GC Idle

The analysis mode was switched to GC Idle, and there was no connection to a MON2020 software session. If you change the mode to GC Idle while MON2020 is connected, this alarm is not generated. If you change the mode to GC Idle in the local operator interface or the GC is in GC Idle mode when you disconnect from MON2020, this alarm is active.

9.1.7 Warm Start Failed

The GC has failed to return to Analysis mode after a power failure. If the GC is in Auto Analysis mode and the power is lost, when the power is reapplied, the GC heats up and analyzes calibration gas until it identifies all the component peaks. After all the peaks are identified and the analysis is good, the GC goes back into Auto Analysis mode. However, if the peaks are not identified within the time period indicated in the Max Warm Start Delay field in the *System* window, the GC raises the **Warm Start Failed** alarm, goes into GC Idle mode, and does not analyze stream gas.

9.1.8 Heater 1 Out of Range

The analytical oven heater failed to reach the set-point within 15 minutes or reads higher than the set-point.

Recommended actions

1. Go the *Hardware* menu and select **Heaters**.
2. Set Heater 1's switch to **Auto**.
3. Wait for three hours and then check again.
4. Measure the supply voltage at the GC terminals with the GC running.
   - If the supply voltage is below 22 V, increase the DC supply voltage so that there are 22 V at the terminals.
   - If the supply voltage is at or above 22 V, check for leaks on the column connections in the oven.

     Note
     A large leak in the oven can cause a cooling effect in the oven.

     If you find leaks, stop the leaks. If you don't find leaks, replace the module.
5. Remove the dome and inspect the heater cable.
   - If the cable is not connected, turn off power, connect the heater cable, and turn on the power.
   - If the cable is connected check if the oven feels hot.
6. Open MON2020 and open the *Diagnostics* screen from the *Tools* menu.

7. Check if the System 22V input value is above 22 V.
   - If it is below 22 V, see Step 4.
   - If it is above 22 V, turn off all supply gases (carrier, calibration, and sample) and remove the dome.
8. Turn off power and remove the analyatical module.
9. Remove the resistance temperature device (RTD) connector from the module and measure the resistance. If the resistance is between 90 and 140 ohms:
   a) Return the RTD to the IMB plug and re-seat the large connector on the IMB board.
   b) Replace the module on the analyzer and turn on the supply gases.
   c) Turn on the GC.
   d) If replacing the module solved the problem, wait until the oven temperature is at set-point and the PWM is below 40. Then restart the analyzer.
   e) If replacing the module did not solve the problem, turn off power to the GC.
   f) Remove the CPU board and the analyzer board and inspect the two analyzer cable connectors.
   g) Ensure that the connectors are seated correctly.
   h) Return the boards and turn the power to the GC back on.
   i) If fixing the connectors did not fix the problem, replace the analyzer board.
10. Replace the back plane.
11. Turn off power and use an ohm meter to measure the resistance at Heater 1.
    - If the resistance is greater than 20 ohms, there is an open circuit. Replace the heater cap.
    - If the resistance is less than 10 ohms, there is a short circuit. Replace the heater cap.
    - If the resistance equals 16 ohms, leave the heater disconnected and turn the GC back on.
12. Go to the ***Hardware*** menu and select **Heaters**.
13. Set the Current PWM for Heater 1 to **100**.
14. Set the Switch for Heater 1 to **Fixed On**.
15. Measure the voltage on the heater cable.
    - If the voltage is less than 20 V, turn of the power. Remove the CPU board and the analyzer board and inspect the analyzer cable connections. Ensure that they are firmly connected to the back plane's connections. Return the boards to the back plane and reapply power. If the problem is not resolved, replace the analyzer board.

- If the voltage is greater than 20 V, the likely cause is a loose connection. Go the ***Hardware*** menu and select **Heaters**. Set Heater 1's Switch to **Auto**. Turn off the GC and inspect the heater cable connection. If the cable is not secure, secure it and return power to the GC. If the cable is secure, contact your Rosemount sales representative.

9.1.9 Heater 2 Out Of Range

For the default configuration of the Rosemount 370XA, this is not used. The Switch setting on the ***Heaters*** screen must be set to **Fixed ON** and the Fixed PWM Output set to **0**.

9.1.10 Detector 1 Scaling Factor Failure

The scaling factor for the high and low gain preamp channel was outside the acceptable range of values.

Potential cause

There is a fault on the analyzer board.

Recommended action

Replace the analyzer board.

9.1.11 Carrier Pressure Low

The carrier gas pressure, as measured on the carrier gas pressure sensor on the analytical module, is too low. The Rosemount 370XA measures and controls the pressure using an EPC. If the pressure does not reach the set-point within 60 seconds, the **Carrier Pressure Low** or **Carrier Pressure out of Range** alarm is triggered.

Recommended actions

1. Confirm that the regulated pressure at the bottle is at 90 psig (6.2 BarG) and that the isolation valves between the bottle and the GC are all open.
2. Ensure that the carrier pressure supply cylinder is open.
3. Set the carrier pressure to 90 psig (6.2 BarG).
4. Leak check the GC between the carrier gas bottle and the tubing hub.
5. If there is a separate actuation gas, set the pressure to 90 psig (6.2 BarG).
6. On the local operator interface (LOI), go to the ***Hardware*** menu and select **EPC**.
7. Ensure that Heater 1's Switch is set to **Auto**.
8. Check to see if the vent is blocked by temporarily disconnecting the vents at the hub on the left side of the GC, allowing them to vent directly.
9. Replace the module.

   For full repairs or bench repairs refer to the *Advanced Module Repair* Guide

9.1.12 Carrier Pressure Out Of Range

The carrier gas pressure, as measured on the carrier gas pressure sensor on the analytical module, is outside of the control limits.

Recommended actions

1. Verify that the regulated pressure at the bottle is at 90 psig (6.2 BarG).
2. If the regulated pressure is OK, check the connections on the carrier pressure control valve and the pressure sensor.
3. Refer to Carrier Pressure Low for help with troubleshooting this issue.

9.1.13 Analog (Input or Output) (High or Low) Signal

The value of the variable assigned to the analog output is outside the range of the analog output.

Recommended action

If the value is valid, re-range the analog output and the associated device that is receiving the signal so that the value of the variable is within the range.

9.1.14 Stream Validation Failure

Alert

The analysis of the validation gas for the associated stream is outside the allowable percent deviation, as defined in the *Validation Data* table.

Recommended actions

1. Confirm that the validation gas concentration is entered correctly in the *Validation Data* table.
2. If the concentrations are entered correctly, check the validation run analysis results and chromatogram for analysis errors.

9.1.15 Stream (1, 2, or 3) RF Deviation

Streams 1 through 3 should only be set to **Analysis** or **Unused**. This alarm may occur if the streams are incorrectly configured for calibration.

Recommended actions

1. Start MON2020 and select **Streams** on the *Application* menu.
2. Set the stream's Usage to **Analysis** or **Unused**.

9.1.16 Stream 4 RF Deviation

The response factor for one or more components have changed during a calibration run by a percentage greater than that set in the component data table.

Recommended actions

1. Verify that the calibration gas concentration has been entered into the component data table correctly and confirm that the calibration gas bottle is not empty or isolated.
2. If the concentrations are correct, the isolation valves are open, and there is sufficient gas pressure (higher than 20 psig or 1.4 BarG), check the calibration analysis and chromatograms for analytical errors.

9.1.17 Analyzer Board Comm Failure

The communication link between the CPU board and the analyzer board has failed.

Recommended actions

1. Remove power and confirm the analyzer board is seated correctly on the back plane.
2. If the analyzer board is seated correctly, replace the analyzer board.
3. If replacing the analyzer board does not rectify the issure, replace the back plane board.

9.1.18 LOI Comm Failure

The communication link between the CPU board and the local operator interface (LOI) has failed.

Recommended actions

1. Remove power and confirm that the connectors from the LOI are seated correctly in the back plane.
2. If the connectors are seated correctly, replace the LOI.
3. If replacing the LOI does not rectify the issue, replace the back plane board.

9.1.19 Auto Valve Timing Failure

The GC has taken too many analysis runs during an auto valve timing (AVT) routine without finding the ideal valve timing.

Recommended actions

1. Confirm that the calibration gas isolation valves are on and there is greater than 10 psig (0.7 BarG) of calibration gas.
2. Generate the AVT report.

Note
Alarms are listed at the bottom of the AVT report under the *ACTIVE ALARMS* heading.

Potential cause

Excessive AVT adjustment

Note
If the valve timing adjustment exceeds the limit set in the Configuration dialog, which by default is five seconds, the **Excessive AVT Adjustment** alarm will be raised, and the retention times and timed events will be set back to the pre-adjustment settings. The valve number(s) that did not find an ideal time will be reported with the alarm.

Recommended actions

Check if the module has been overhauled.

- If the module has been overhauled, run the AVT with default values.
  a. Go to the ***Main Menu*** and select **Auto Valve Timing** from the ***GC Control*** menu.
  b. Select the Use module default check box, and then press ✓.

  If you still get the error after running the AVT with default values:

  a. Use MON2020 to select the ***Chromatogram Viewer*** on the ***Chromatograph*** menu.
  b. Click **GC Archive**.
  c. Download the first and last AVT chromatograms.
  d. Save the AVT report and contact your local Rosemount service representative.

  Note
  Click the *Anly Type* column to sort the chromatograms by type.

- If the module has not been overhauled:
  a. Select the ***Chromatogram Viewer*** on the ***Chromatograph*** menu.
  b. Click **GC Archive**.
  c. Look at the last AVT chromatogram.

  Note
  Click the *Anly Type* column to sort the chromatograms by type.

  If the retention time for n-pentane is greater than 115 seconds, exchange the module with one that has been overhauled and follow the overhaul procedure.
  If the retention time for ethane is greater than 215 seconds, exchange the module with one that has been overhauled and follow the overhaul procedure.
  If the retention time for ethane is less than 215 seconds, repeat this procedure.

Potential cause

AVT timed event adjustment.

Example: **AVT Timed Event Adj Fail Time (#3) = 8, Time (#4) = 6, 7**

Note
If an adjustment of a timed event results in it being within 0.5 seconds of another timed event, the **AVT Timed Event Adjustment** will be raised, and the retention times and timed events will be set back to the pre-adjustment values.

Recommended actions

1. Using MON2020, select the ***Chromatogram Viewer*** on the ***Chromatograph*** menu.
2. Click **GC Archive**.
3. Look at the last AVT chromatogram.

   Note
   Click the *Anly Type* column to sort the chromatograms by type.

   - If the retention time for n-pentane is greater than 115 seconds, exchange the module with one that has been overhauled and follow the overhaul procedure.
   - If the retention time for ethane is greater than 215 seconds, exchange the module with one that has been overhauled and follow the overhaul procedure.
   - If the retention time for ethane is less than 215 seconds:
     a. Go to the ***Main Menu*** and select Auto Valve Timing from the ***GC Control*** menu.
     b. Select the **Use module default** check box, and then press ✓.
     c. If the AVT fails again, save the AVT report and the first and last AVT chromatograms and contact your local Rosemount service representative.

Potential cause

AVT missing peak.

Example: `AVT Missing Peak: i-Pentane`

Note
If the GC cannot find a peak during a calibration, it will raise the `AVT Peak ID Fail` alarm and set the retention times and timed events back to the pre-adjustment values. The GC will report the peak that could not be identified with the alarm.

Recommended action

Run the AVT with default values.

a) Use MON2020 to select the ***Chromatogram Viewer*** on the ***Chromatograph*** menu.

b) Click **GC Archive**.

c) Look at the first AVT chromatogram.

   Note
   Click the *Anly Type* column to sort the chromatograms by type.

d) Compare the retention times shown above each peak to the retention times in the ***Retention Times*** table to the right of the chromatogram.
   If the retention times do not match, update the retention times in the table to match the retention times in the chromatogram and re-run the AVT with current values.

If the retention times still do not match, download the first and last AVT chromatograms. Save the AVT report and contact your local Rosemount service representative.

9.1.20 Analytical Module Communication Failure

The Intelligent Module board on the analytical module is not communicating with the CPU board.

9.1.21 Analytical Module Not Initialized

The analytical module failed to initialize when power was applied.

9.1.22 Module Validation Failure

The analysis of the calibration gas failed during the module validation process. When you install a new module, it will go through a start-up routine that includes a validation process. If it fails this validation procedure, the GC will trigger the **Module Validation Failure** alarm.

Recommended actions

1. Open the ***Alarms*** screen and acknowledge and clear the **Module Validation Failure** alarm.
   - If the module is not new or overhauled, configure it using the overhaul procedure.
   - If the module is new or overhauled, proceed to Step 2.
2. Verify that the calibration gas isolation valves are open.

   Note
   The calibration gas is used to validate the module. If the calibration gas is not supplied to the GC, the calibration will fail.

   - If the valves are closed, proceed to Step 3.
   - If the valves are open, proceed to Step 5.
3. Open the isolation valves.
4. Select Module Validation on the ***Tools*** menu and rerun the validation.
5. Verify that the calibration gas pressure is set to 15 psig (1 BarG).
   - If it is not, set the pressure to 15 psig (1 BarG). Then proceed to Step 4.
   - If the pressure is set to 15 psig (1 BarG), select Calibration Gas Info on the ***Application*** menu. Then proceed to Step 6
6. Verify that the calibration concentration values displayed on the screen match those listed on the calibration gas certificate.
   - If the values do not match, enter the correct calibration gas concentrations onto the ***Calibration Gas Info*** screen. Then proceed to Step 4.

- If the values match, proceed to Step 7.

7. Check the calibration gas lines for leaks.
   - If leaks are found, fix them. Then rerun the module validation.
   - If there are no leaks, proceed to Step 8.
8. If you haven't already checked the O-rings, turn off the power to the GC and isolate the carrier gas, actuation gas, calibration gas, and stream gases.
9. Remove the oven dome and the analytical module.
10. Inspect the feed-through manifold.
11. Verify that there is one O-ring in each of the ten gas paths on the feed-through manifold.
    - If some O-rings are missing, replace them.

      Note
      If the O-rings in the feed-through are not seated correctly, missing, or not sealing, then the analysis can be very unpredictable.

    - If no O-rings are missing, proceed to Step 12.
12. Inspect the bottom of the analytical module. See if any O-rings are stuck to the bottom of the analytical module.
    - If O-rings are stuck, remove them and reinstall them in the feed-through. Then proceed to Step 13.

      Note
      The O-rings can stick to the base of the module and when combined with an O-ring in the feed-through manifold, the path may not seal or may become blocked, resulting in unpredictable performance.

    - If there are no stuck O-rings, proceed directly to Step 13.
13. Check all electrical connectors on the base of the module are secure.
14. Reinstall the module.
15. Open the isolation valves for the actuation gas, carrier gas, calibration gas, and other stream gases.
16. Turn on the power.
17. Once the electronics have booted up, select Module Validation on the ***Tools*** menu.
18. If the validation fails again, generate a module validation report and contact your local Rosemount service organization.

9.1.23 IMB Incompatible

The firmware revision of the intelligent module board (IMB) is newer than the firmware revision of the CPU board.

Recommended action

Upgrade the CPU firmware.

9.1.24 IMB CDT Component is missing in GC

A component that is in the component data table stored in a recently installed module is not configured in the GC's existing component data table. The component data table of the GC must match (with the exception of neo-pentane) the component data table of a replacement module.

9.1.25 Energy Value Invalid

If enabled, the GC analyzes the calibration gas as an unknown stream and computes its energy value. The GC then compares this value to the *Cal Gas Cert CV* and determines if the calibration gas's energy value is within the CV check allowed deviation. If it isn't, the GC triggers the **Energy Value Invalid** alarm.

9.1.26 Stream (1, 2, or 3) Out Of Order

Streams 1 through 3 should only be set to Analysis or Unused.

Potential cause

This alarm may occur if the streams are incorrectly configured for calibration.

Recommended actions

1. Start MON2020 and select Streams from the ***Application*** menu.
2. Set the stream's Usage to Analysis or Unused.

9.1.27 Stream 4 RF Out Of Order

The response factors for one or more components is not in the order of thermal conductivity configured for natural gas applications.

9.1.28 Calibration Energy Value Check Fail

The energy value calculated from the analysis value of the calibration during a calibration cycle is not within the limits of the energy value entered from the calibration certificate.

9.1.29 Stored Data Integrity Failure

Data associated with the GC's measurement results and logs are stored in the GC along with a 16-bit cyclic redundancy check (CRC) code. When the data is retrieved, its integrity is verified by recomputing the CRC code and comparing it with the CRC code stored along with the data. If there is a mismatch, then this alarm is generated.

Recommended action

Save the current configuration and replace the CPU board.

9.1.30 n-Pentane RT Drift

The retention time for the n-pentane peak has drifted too close to Valve 3's timing.

Potential cause

This is typically due to contamination in the valves.

Recommended action

Exchange and overhaul the module.

9.1.31 Ethane RT Drift

The retention time for the ethane peak has drifted too close to the end of the analysis cycle.

Potential cause

This is typically due to contamination in the valves.

Recommended action

Exchange and overhaul the module.

9.2 GC won't power up

Recommended actions

1. Measure the voltage at the power terminal on the back plane.
2. Ensure that the GC is receiving 24 V at the terminal.
3. Ensure that the terminal is wired correctly.
4. Ensure that the terminal is seated correctly in its receptacle.

   The terminal should not jiggle or otherwise move when pressed with a finger.
5. Check the lights on the CPU board, local operator interface (LOI), and the light emitting diode (LED) beside the power terminal.
   - If the CPU board's green lights are on, but the LOI screen is off, replace the LOI.
   - If the white LED beside the power terminal is on, the GC's fuse is blown. Replace the fuse.
6. If none of the above actions worked, contact your local Rosemount service representative.

9.3 Un-normalized total error

An un-normalized total error, which typically occurs when the un-normalized total is outside of a ±2 percent of 100 percent, indicates that the amount of stream gas analyzed is significantly different from the amount of calibration gas analyzed during the last calibration run.

Recommended actions

1. Use MON2020 to generate an analysis report for the analysis cycle that had the un-normalized total error.
   - If there has been a significant change in atmospheric pressure since the last calibration, run a normal calibration by selecting Calibration from the *Control* menu.

     Note
     The sample is equalized to atmospheric pressure at the beginning of each analysis cycle, so that the amount of sample analyzed will change with the atmospheric pressure. Large swings in atmospheric pressure associated with weather events can cause changes in un-normalized total outside of the typical ±2 percent limits.

   - If there has not been a significant change in atmospheric pressure since the last calibration, proceed to Step 2.

2. Check the un-normalized total.
   - If the un-normalized total is lower than 98 percent, proceed to Step 3.
   - If the un-normalized total is between 98 percent and 102 percent, return the GC to service.
   - If the un-normalized total is higher than 102 percent, proceed to Step 5.

3. Check the stream isolation valves.
   - If the isolation valves are closed, open all of them and ensure the sample pressure is between 10 and 30 psig (0.7 and 2 BarG).
   - If the isolation valves are open, proceed to Step 4.

4. Check the sample pressure regulator.
   - If the pressure is not between 10 and 30 psig (0.7 and 2 BarG), adjust it until it is within that range. If you cannot adjust the sample pressure, confirm that the isolation valve is open, there is more than 20 psig (1.4 BarG) pressure in the process, and any filters on the probe and between the probe and regulator are not blocked.

     Note
     A blocked filter will reduce the amount of sample that purges through the sample loop before the sample is injected. If the sample loop is not purged completely with the new sample, the amount of sample injected and analyzed will be lower than during the calibration run, resulting in a low un-normalized total.

   - If the pressure is between 10 and 30 psig (0.7 and 2 BarG), replace the sample stream 2-micron filter. Then proceed to Step 6.

5. Check vents.
   - If the vents are blocked or filled with liquids, clear them and run a forced calibration.
   - If the vents are not blocked, replace the module.

6. Run an analysis of the sample stream.

- If the un-normalized total is above 98 percent, return the GC to service.
- If the un-normalized total is below 98 percent, proceed to Step 7.

7. Remove the sample flow restrictor from the sample system and blow through with a high pressure clean and dry gas such as helium.
   - If there is no flow through the restrictor, replace the restrictor.
   - If there is flow through the restrictor, proceed to Step 8.
8. Reassemble and re-run the analysis.
   - If the un-normalized total is above 98 percent, return the GC to service.
   - If the un-normalized total is below 98 percent, proceed to Step 9.
9. Replace the stream solenoid.
10. If replacing the solenoid does not solve the problem, replace the module.

9.4 Replace the central processing unit (CPU)

Procedure

1. Save the gas chromatograph (GC) configuration file. In MON2020, go to **File** → **Save Configuration (to PC)**.
2. Power down the GC.
3. Open the GC cover.
4. Remove the clear plastic cover that holds the boards in place.
5. Remove the CPU board.

⚠ CAUTION

ELECTROSTATIC DISCHARGE (ESD) HANDLING PRECAUTIONS REQUIRED

CPU boards are sensitive electronic devices.

Do not ship or store near strong electrostatic, electromagnetic, or radioactive fields.

Use an anti-static wrist strap (or ESD wrist strap) when handling the boards.

6. On the new CPU board, set up switches as shown in the following image:

Figure 9-1: CPU switch settings

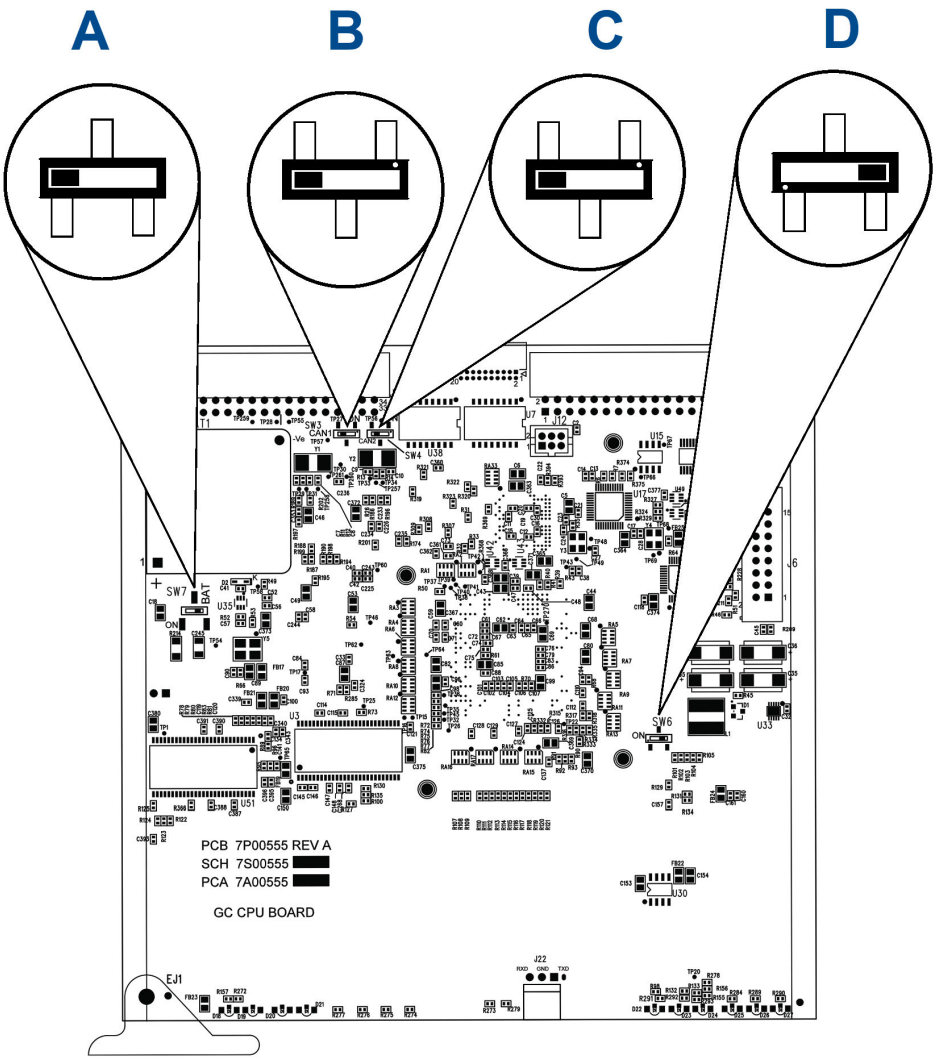

A. Turn SW7 ON (toward the dot).
B. Turn SW3 OFF (away from the dot).
C. Turn SW4 OFF (away from the dot).
D. Turn SW6 OFF (away from the dot).

Note
Rosemount 370XA GCs are tagged with CPU board part number 7A00555G01.

7. Install the new CPU board in the card cage.
   Ensure the board is seated firmly in place.
8. Place the clear plastic cover back over the boards.
9. Close the GC cover.

10. Power up the GC and connect to it through MON2020.
11. In MON2020, go to **Chromatograph** → **View/Set Date_Time**. Set the date and time for the GC.

    Consult the Rosemount MON2020 Software for Gas Chromatographs Reference Manual for more information.

12. In MON2020, go to **Tools** → **Cold Boot**. Cold boot the GC.
    The GC reboots automatically and disconnects from MON2020.
13. Wait for the GC to reboot.
14. Reconnect to the GC using MON2020.
15. In MON2020, go to **File** → **Restore Configuration (to GC)**. Use the configuration file you saved in Step 1 or use the last known good configuration.
16. Wait for the heaters to stabilize.
17. Go to **Control** → **Auto Sequence** to auto sequence the GC.

9.5 Recover the central processing unit (CPU)

Follow this procedure if you have accidentally installed a CPU board with the switch in the **Off** position or if unusual things are happening to the analyzer and you suspect a corrupt CPU.

Important
Do not use a config file saved from a suspect CPU.

Procedure

1. Power down the gas chromatograph (GC).
2. Open the GC cover.
3. Remove the cover from the card cage.
4. Remove the CPU board from the card cage.
5. Ensure the switches on the CPU board are as shown in .
6. Set the CPU board aside for ten minutes to bleed the contents of the battery backed random access memory (RAM).
7. On the CPU board, set up the switches as shown in .
8. Install the CPU board.

   Ensure that the board is firmly seated in the card cage.
9. Install the cover on the card cage.
10. Close the GC cover.
11. Power up the GC
12. Connect to the GC using MON2020.
13. Go to **Chromatograph** → **View/Set Date Time**.
14. Set the date and time for the GC. Save your changes.
15. Go to **Tools** → **Cold Boot**. Cold boot the GC.
    The GC reboots automatically and disconnects from MON2020.

16. Wait for the GC to boot.
17. Connect to the GC using MON2020.
18. Go to **File** → **Restore Configuration (to GC)** and restore configuration to the GC.
19. Wait for the heaters to stabilize.
20. In MON2020, go to **Control** → **Auto Sequence** to return the GC to normal operation.

9.6 Peaks retention time drift and total unnormalized concentration fluctuations

If the analyzer is demonstrating a retention time shift from the values at shipment or at installation/start-up of approximately eight to ten seconds for ethane or approximately three to four seconds for n-pentaine, or if the total unnormalized concentration for any two or more of the recent month's final calibration runs differ from 100 percent by more than ±2 percent, then follow the steps below.

Note
This symptom has only been observed in Rosemount 370XA gas chromatographs (GCs) manufactured from 2018 onwards, but was resolved in 2021.

Recommended actions

1. Verify the tightness of the hex-headed bolts noted by the circles in Figure 9-2 and tighten these bolts to 12 in.-lb. but no more than ¼ turn past finger tight.

Figure 9-2: Tightening Bolts

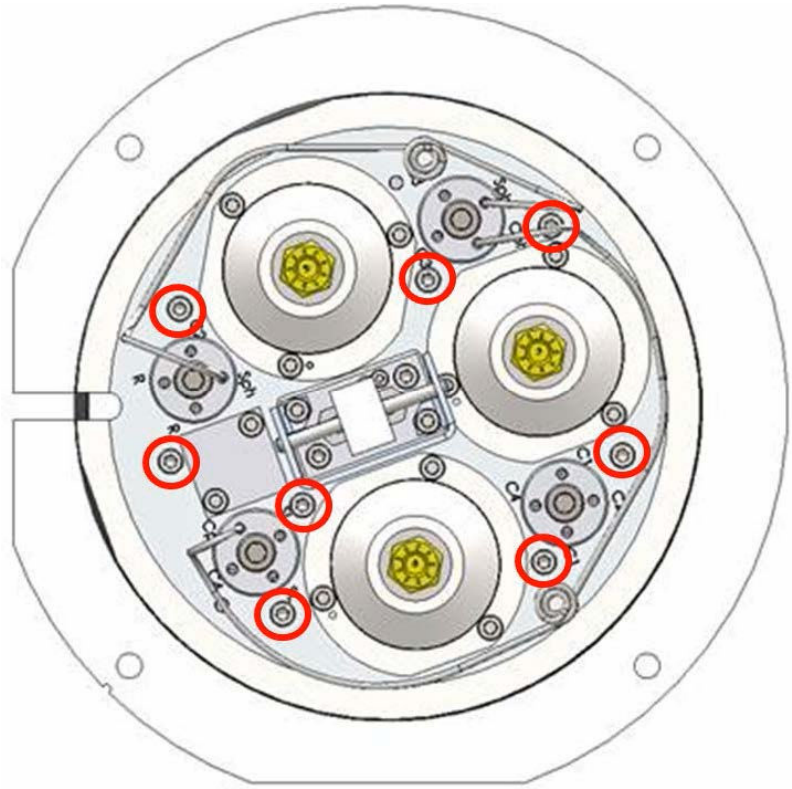

In most cases, tightening the bolts and replacing analytical valve diaphragms reverses the drift and eliminates total unnormalized deviations.

2. Using the Rosemount 370XA diaphragm valve replacement kit (PN 7A00137G01), replace diaphragms on all three analytical valves (sample valve V-1, back flush valve V-2, and dual column valve V-3). Observe and take pictures of any contamination found on the diaphragms and valve plates as found before replacing the diaphragms.
3. Replace sample shut-off valve diaphragms and O-rings using SSO replacement kit (PN 7A00140G01).
4. After several stable analysis runs on calibration gas, compare the retention times for n-pentane and ethane to those at shipment or installation/start-up.

   If desired, make minor adjustments to eliminate any differences by incrementally adjusting the carrier pressure set point or valve timing.

   Tightening the bolts and replacing the diaphragms should resolve both the retention time drift and total unnormalized concentration deviation.

A Flowcharts

If you do not find help in the troubleshooting flowcharts, contact your local Emerson service representative.

A.1 The GC won't power up

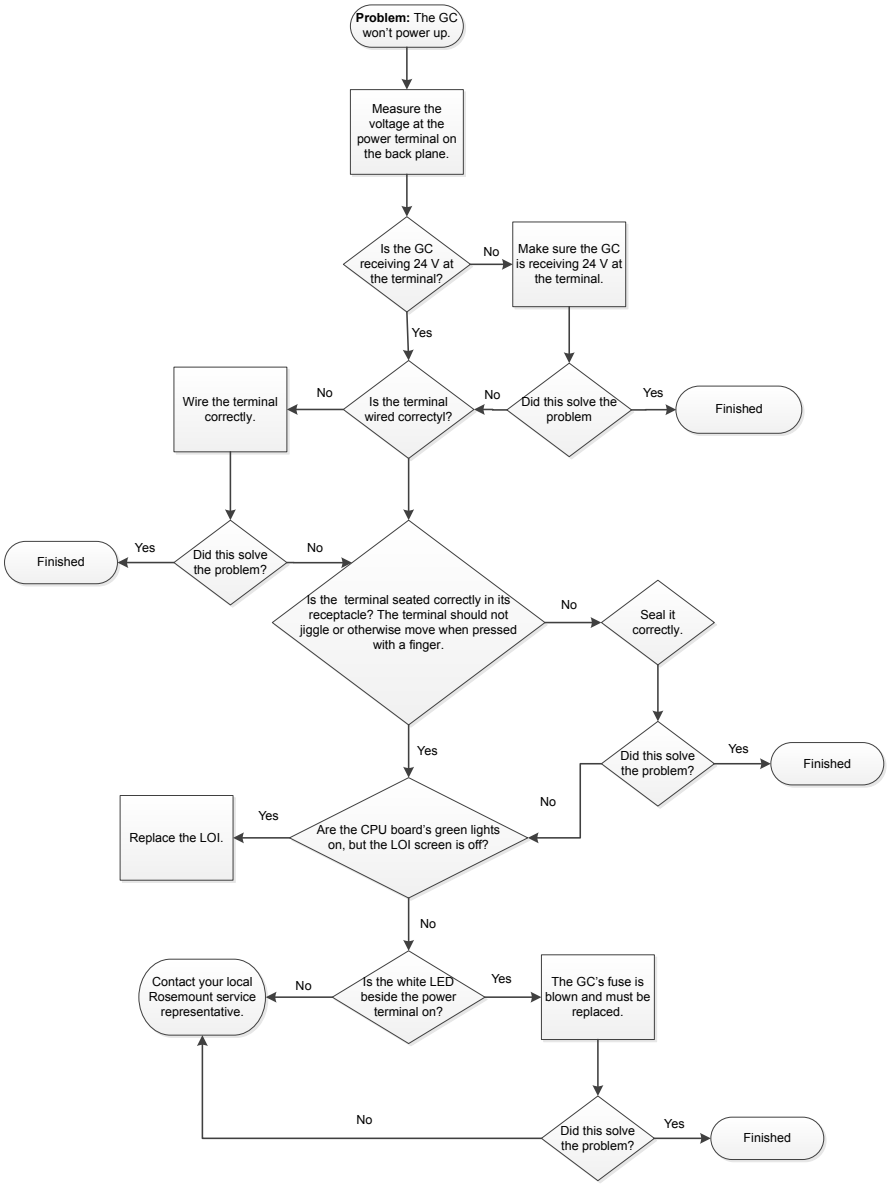

A.2 Un-normalized total error

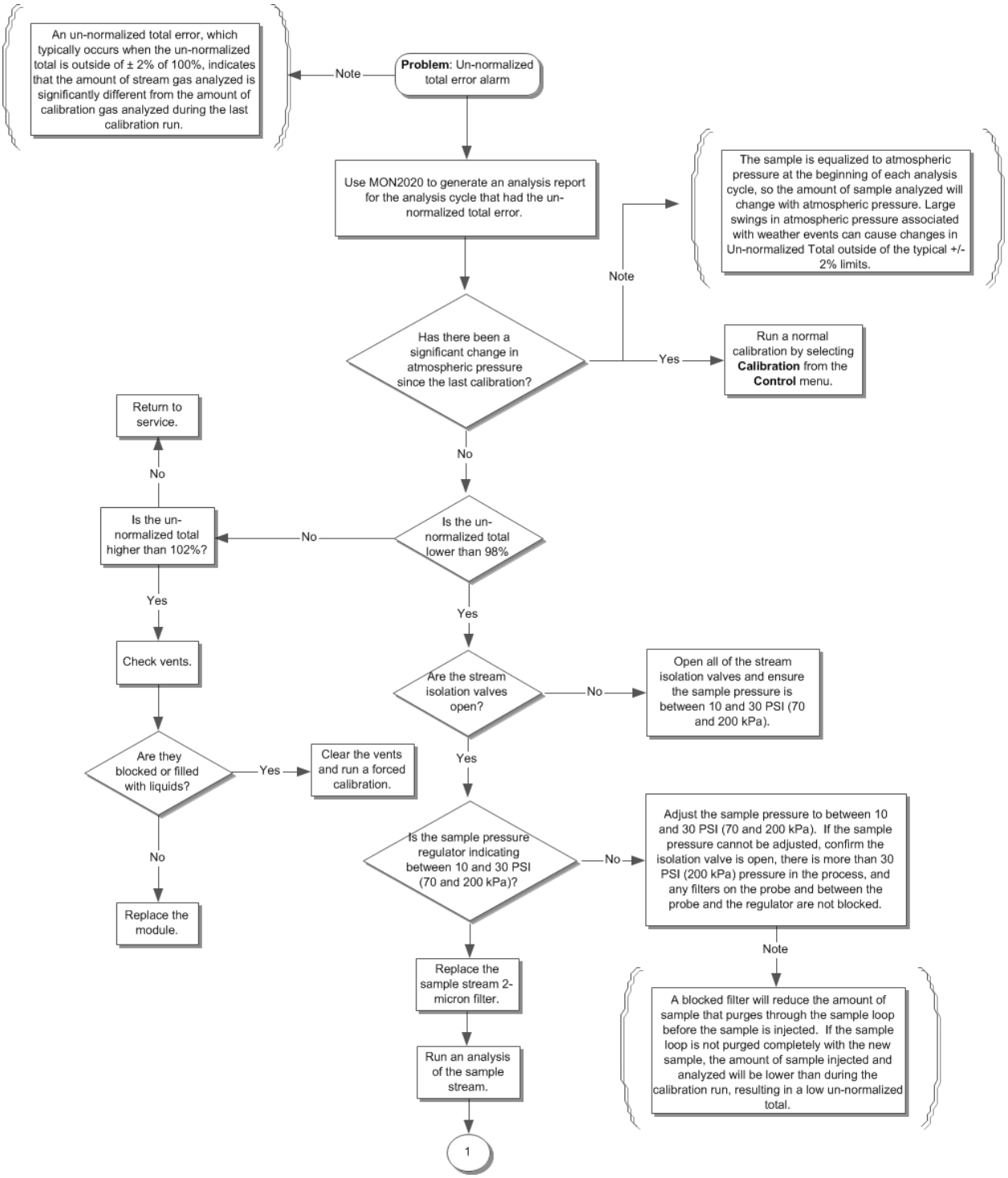

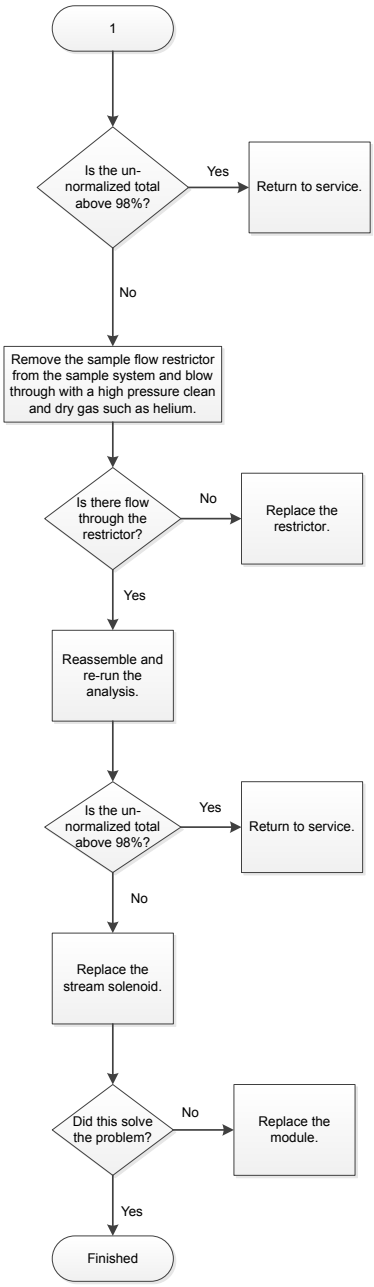
1
Is the un-normalized total above 98%?
Yes
Return to service.
No
Remove the sample flow restrictor from the sample system and blow through with a high pressure clean and dry gas such as helium.
Is there flow through the restrictor?
No
Replace the restrictor.
Yes
Reassemble and re-run the analysis.
Is the un-normalized total above 98%?
Yes
Return to service.
No
Replace the stream solenoid.
Did this solve the problem?
No
Replace the module.
Yes
Finished

A.3 Carrier pressure alarms

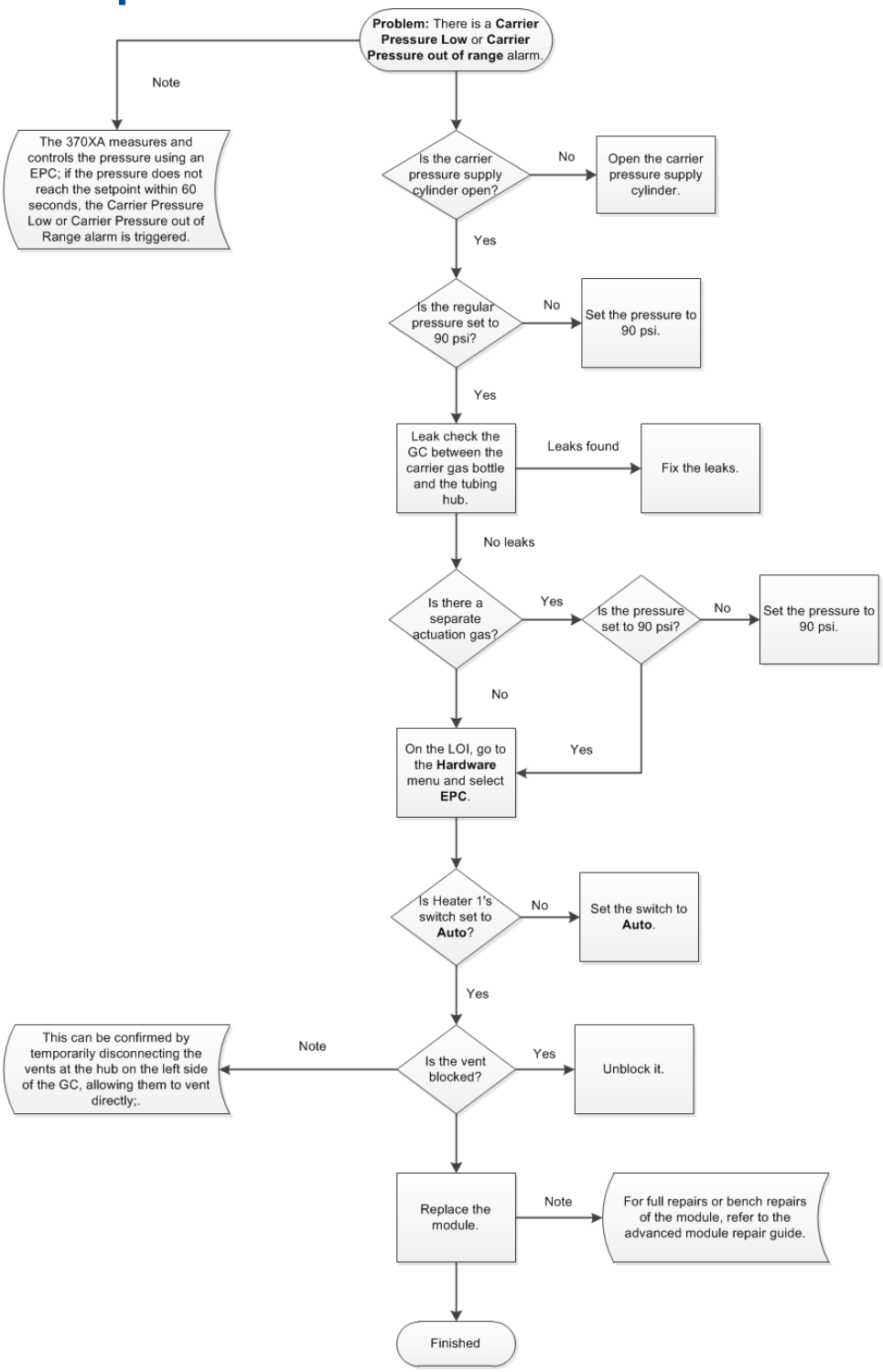

A.4 Heater won't reach set point

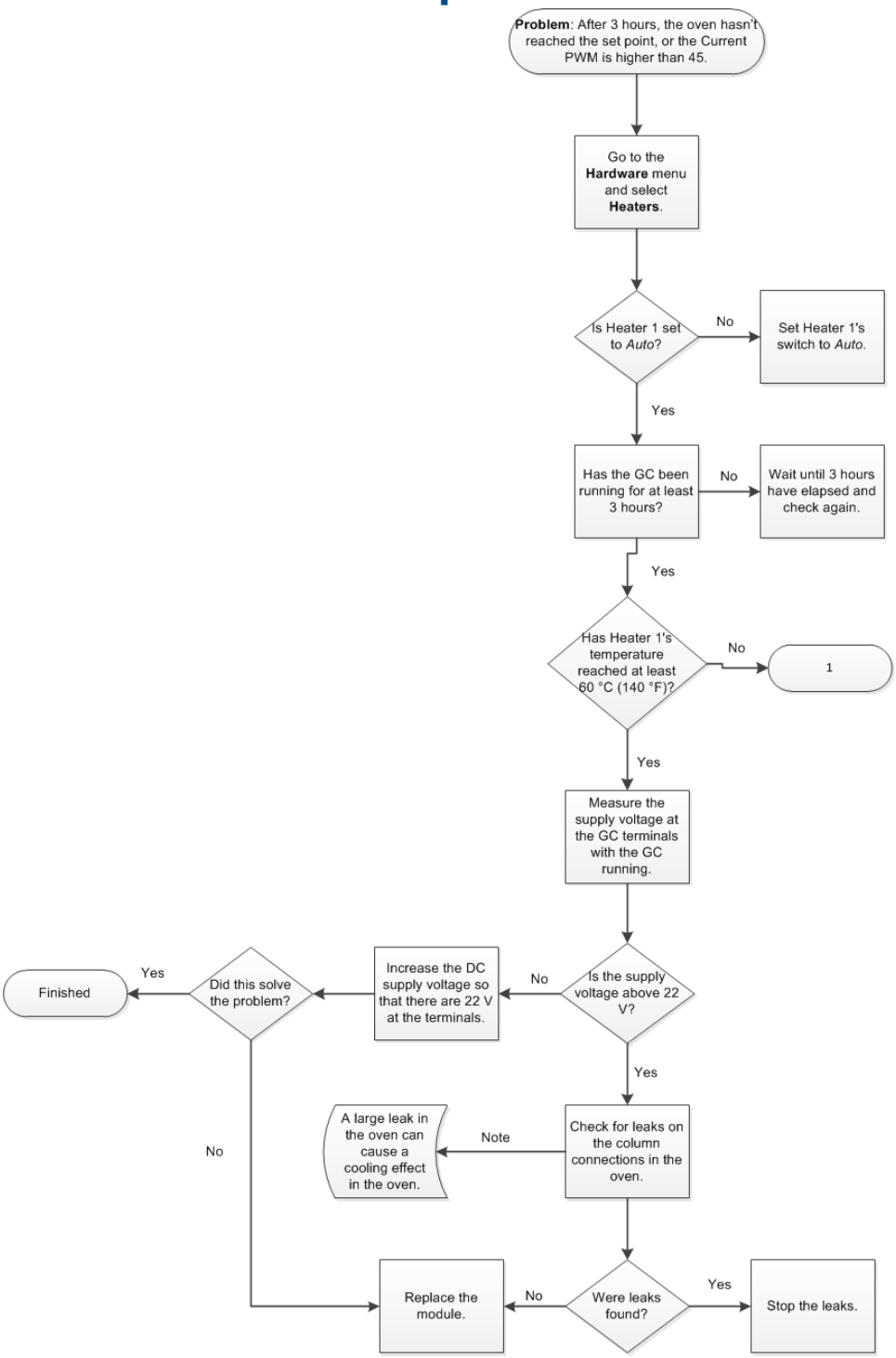

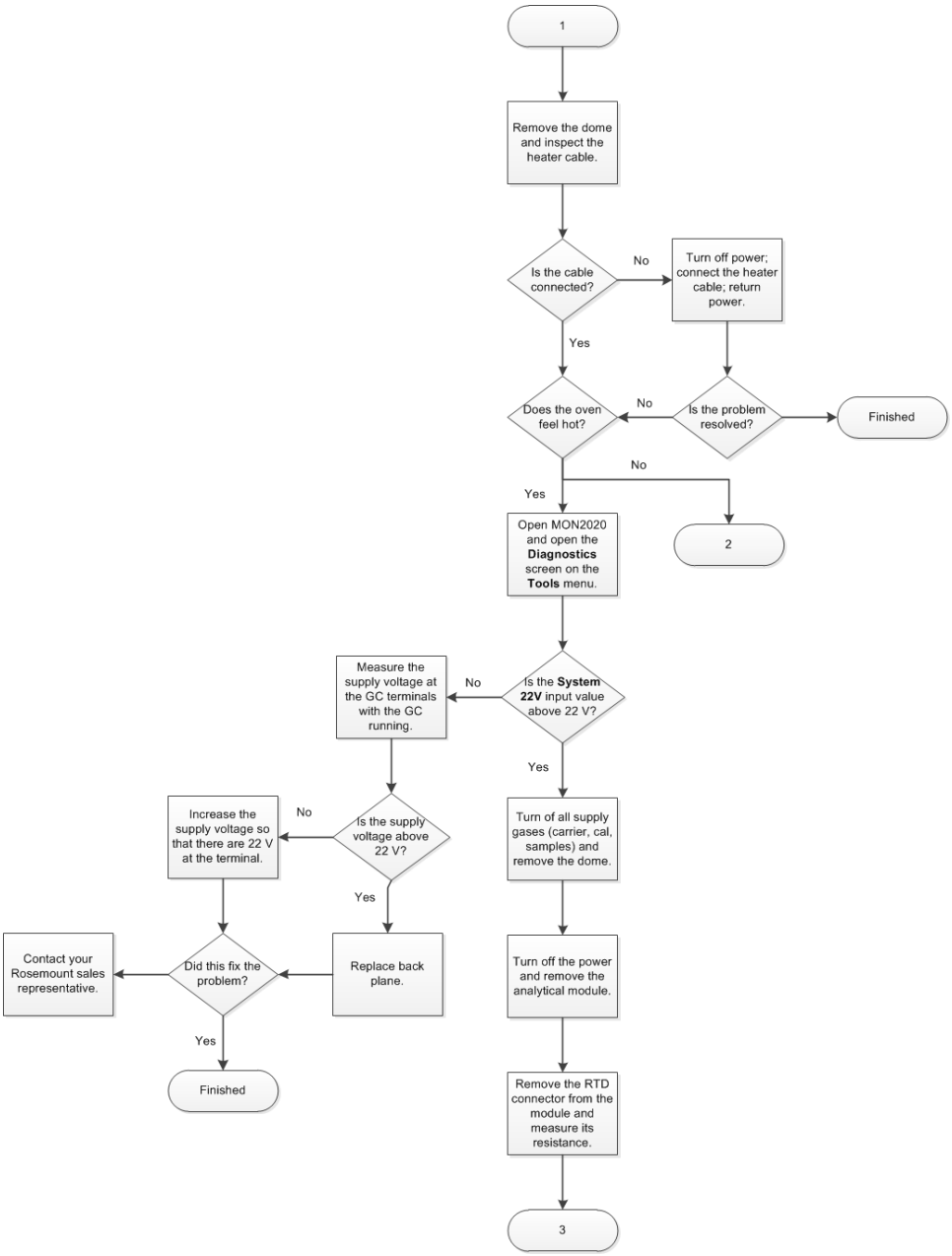
1
Remove the dome and inspect the heater cable.
Is the cable connected?
No
Turn off power; connect the heater cable; return power.
Yes
Does the oven feel hot?
No
Is the problem resolved?
Finished
No
Yes
Open MON2020 and open the **Diagnostics** screen on the **Tools** menu.
2
Is the **System 22V** input value above 22 V?
No
Measure the supply voltage at the GC terminals with the GC running.
Yes
Turn of all supply gases (carrier, cal, samples) and remove the dome.
Is the supply voltage above 22 V?
No
Increase the supply voltage so that there are 22 V at the terminal.
Yes
Replace back plane.
Did this fix the problem?
Contact your Rosemount sales representative.
Yes
Finished
Turn off the power and remove the analytical module.
Remove the RTD connector from the module and measure its resistance.
3

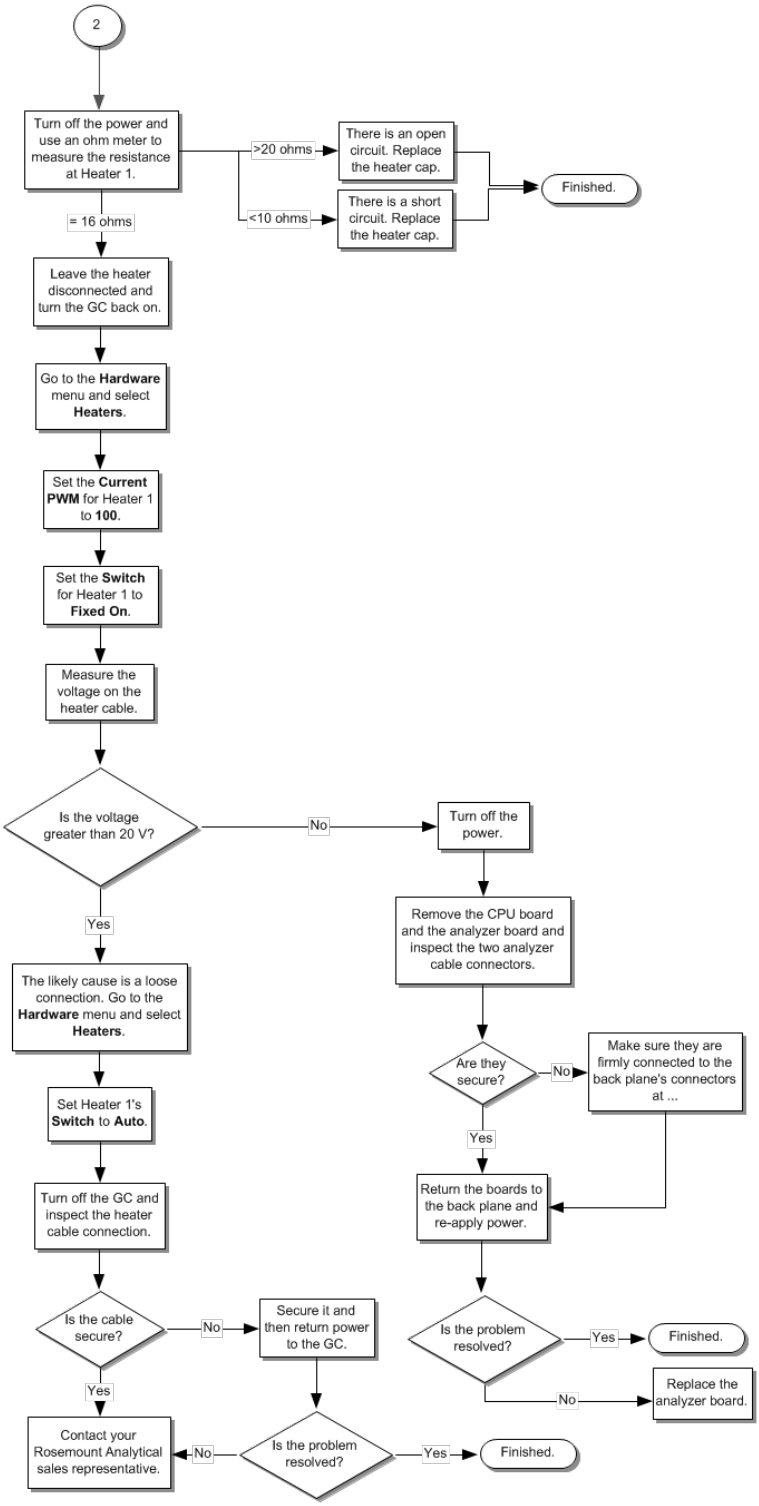
2
Turn off the power and use an ohm meter to measure the resistance at Heater 1.
>20 ohms
There is an open circuit. Replace the heater cap.
<10 ohms
There is a short circuit. Replace the heater cap.
Finished.
= 16 ohms
Leave the heater disconnected and turn the GC back on.
Go to the **Hardware** menu and select **Heaters**.
Set the **Current PWM** for Heater 1 to **100**.
Set the **Switch** for Heater 1 to **Fixed On**.
Measure the voltage on the heater cable.
Is the voltage greater than 20 V?
No
Turn off the power.
Remove the CPU board and the analyzer board and inspect the two analyzer cable connectors.
Are they secure?
No
Make sure they are firmly connected to the back plane's connectors at ...
Yes
Return the boards to the back plane and re-apply power.
Is the problem resolved?
Yes
Finished.
No
Replace the analyzer board.
Yes
The likely cause is a loose connection. Go to the **Hardware** menu and select **Heaters**.
Set Heater 1's **Switch** to **Auto**.
Turn off the GC and inspect the heater cable connection.
Is the cable secure?
No
Secure it and then return power to the GC.
Is the problem resolved?
Yes
Finished.
No
Contact your Rosemount Analytical sales representative.
Yes
Finished.

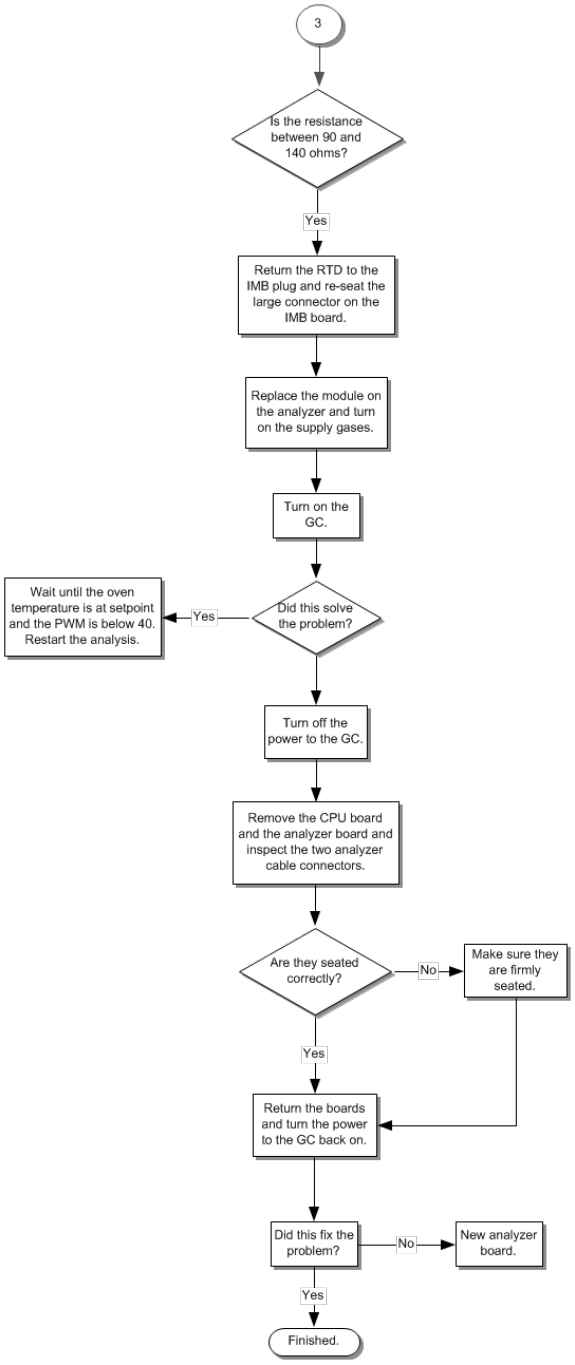
3
Is the resistance between 90 and 140 ohms?
Yes
Return the RTD to the IMB plug and re-seat the large connector on the IMB board.
Replace the module on the analyzer and turn on the supply gases.
Turn on the GC.
Did this solve the problem?
Yes
Wait until the oven temperature is at setpoint and the PWM is below 40. Restart the analysis.
Turn off the power to the GC.
Remove the CPU board and the analyzer board and inspect the two analyzer cable connectors.
Are they seated correctly?
No
Make sure they are firmly seated.
Yes
Return the boards and turn the power to the GC back on.
Did this fix the problem?
No
New analyzer board.
Yes
Finished.

A.5 Module validation fails

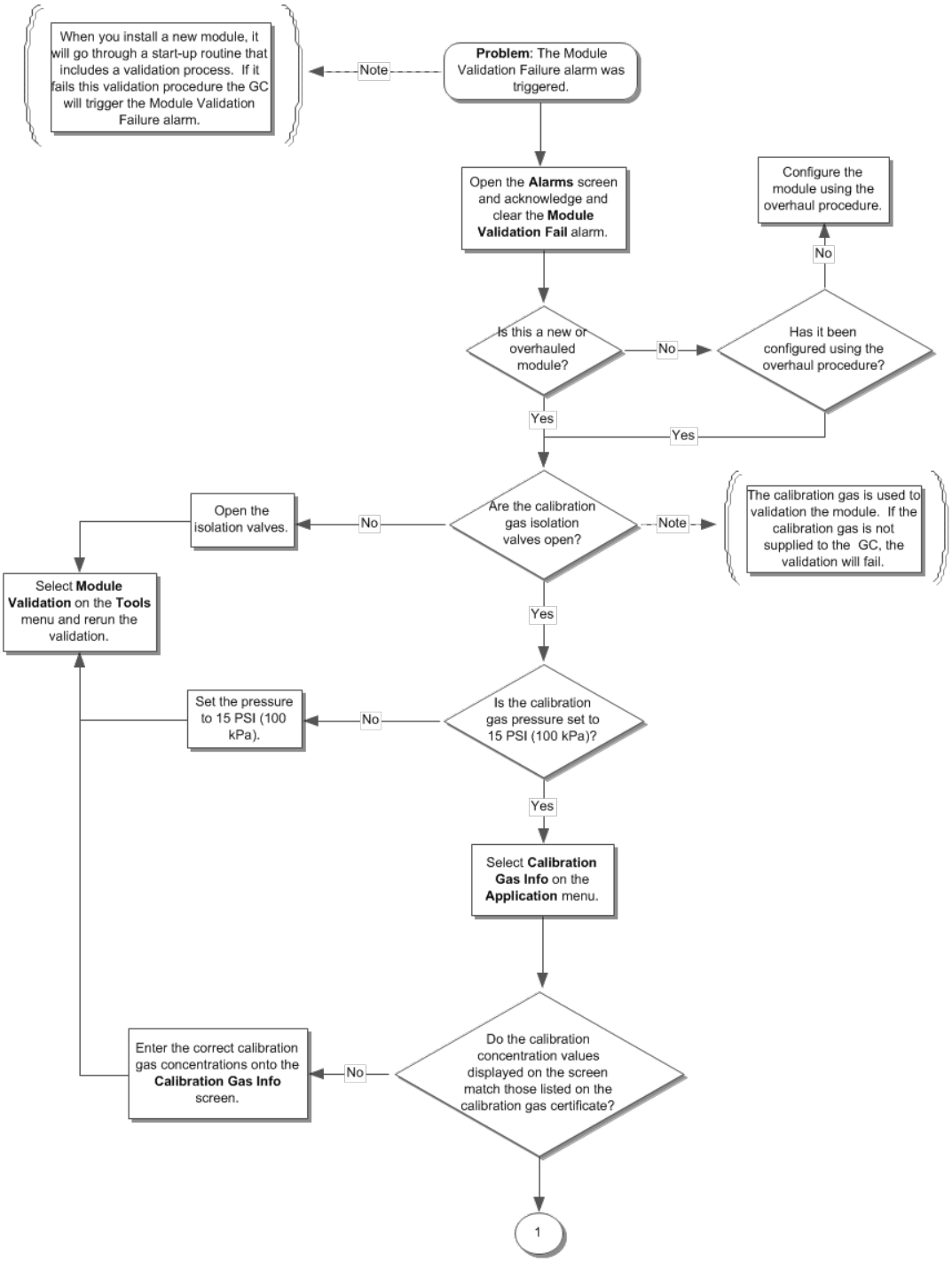

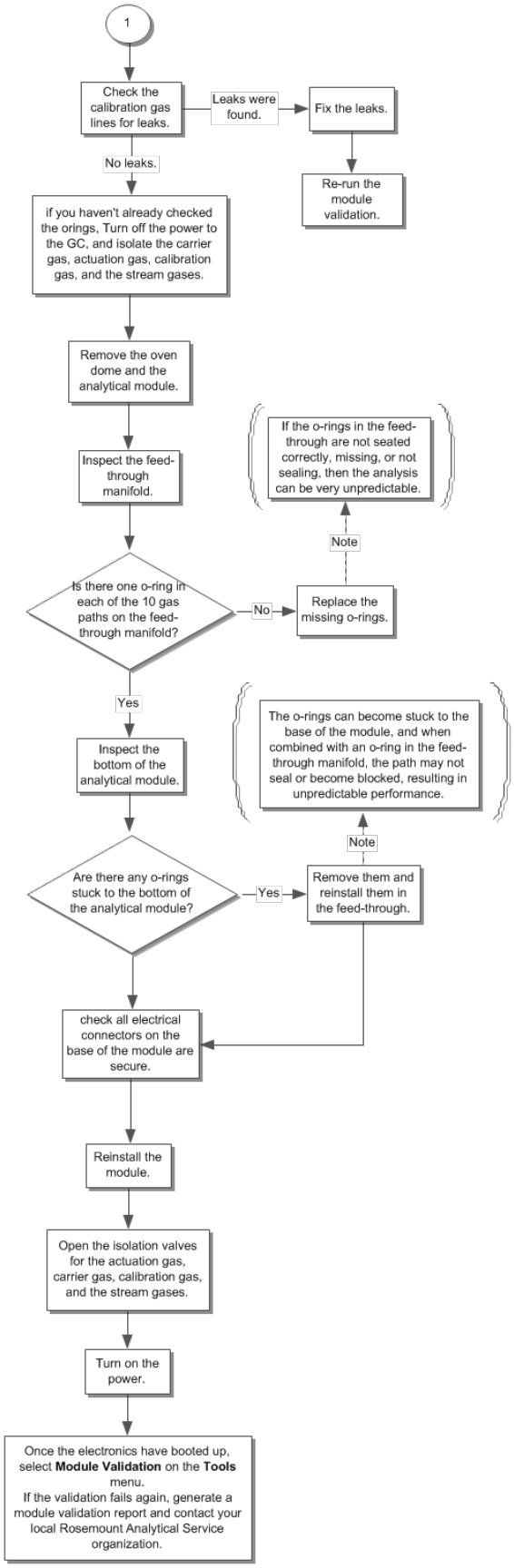
1
Check the calibration gas lines for leaks.
Leaks were found.
Fix the leaks.
Re-run the module validation.
No leaks.
if you haven't already checked the orings, Turn off the power to the GC, and isolate the carrier gas, actuation gas, calibration gas, and the stream gases.
Remove the oven dome and the analytical module.
Inspect the feed-through manifold.
If the o-rings in the feed-through are not seated correctly, missing, or not sealing, then the analysis can be very unpredictable.
Note
Is there one o-ring in each of the 10 gas paths on the feed-through manifold?
No
Replace the missing o-rings.
Yes
Inspect the bottom of the analytical module.
The o-rings can become stuck to the base of the module, and when combined with an o-ring in the feed-through manifold, the path may not seal or become blocked, resulting in unpredictable performance.
Note
Are there any o-rings stuck to the bottom of the analytical module?
Yes
Remove them and reinstall them in the feed-through.
check all electrical connectors on the base of the module are secure.
Reinstall the module.
Open the isolation valves for the actuation gas, carrier gas, calibration gas, and the stream gases.
Turn on the power.
Once the electronics have booted up, select Module Validation on the Tools menu.
If the validation fails again, generate a module validation report and contact your local Rosemount Analytical Service organization.

A.6 Auto valve timing fails

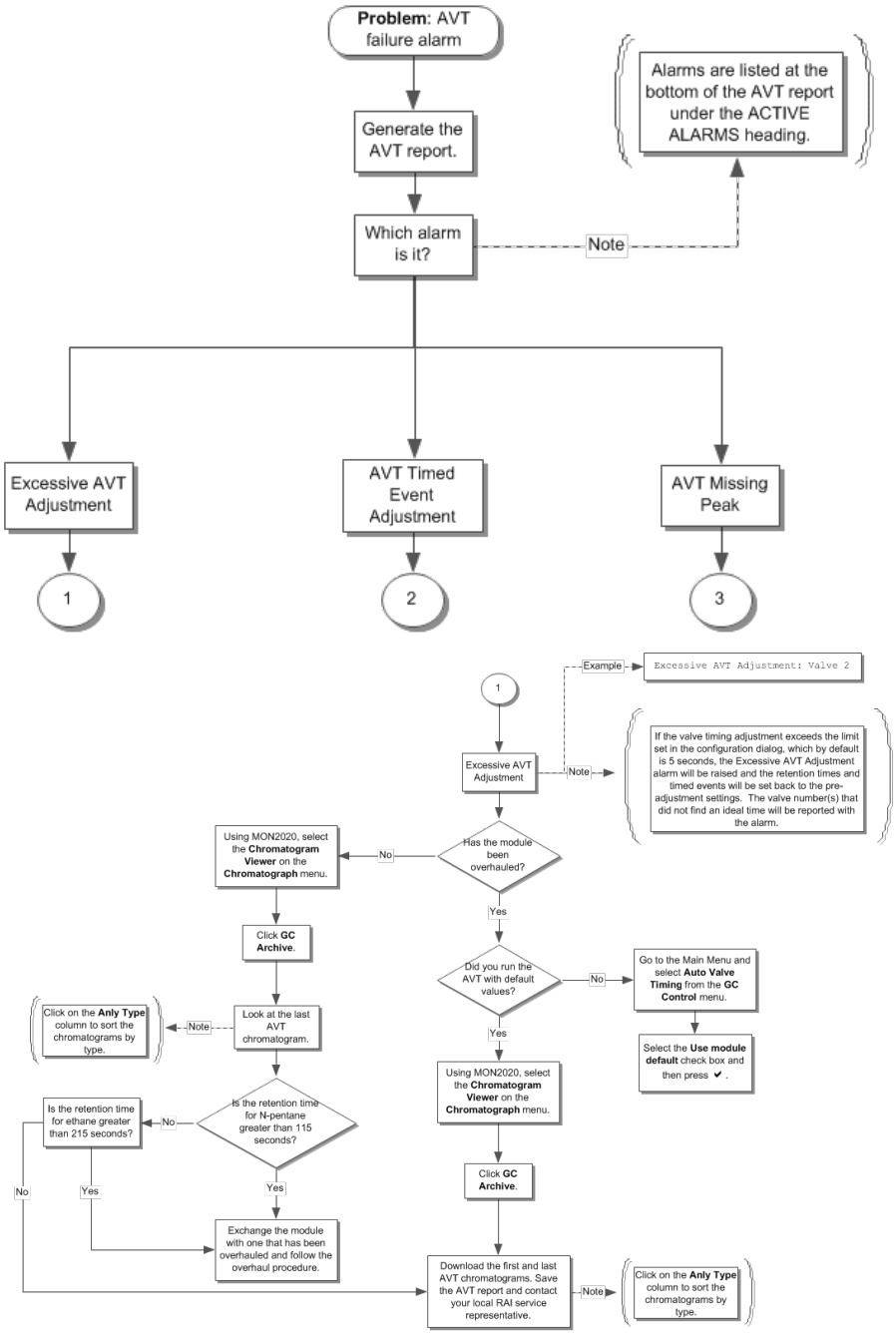

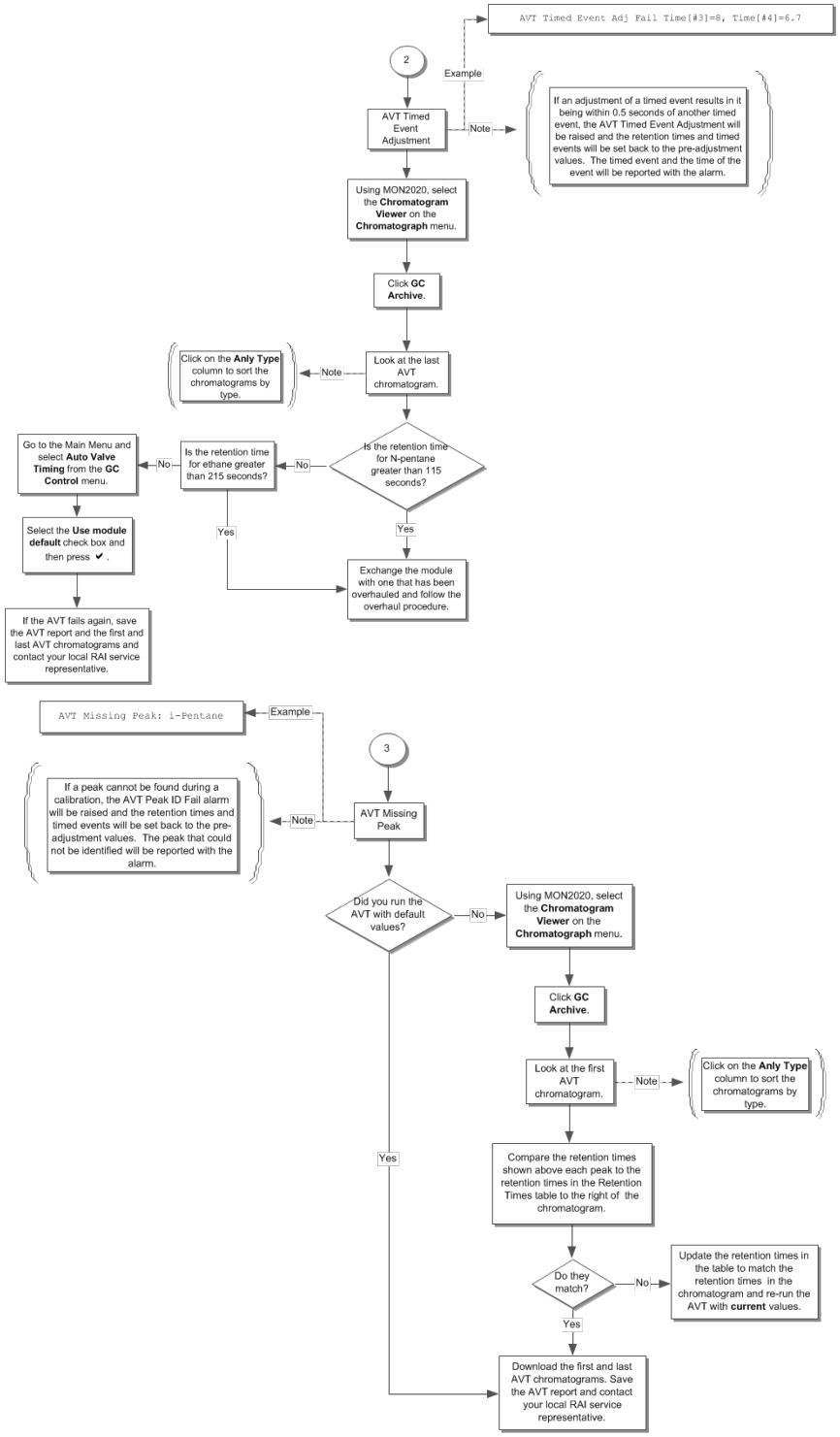
AVT Timed Event Adj Fail Time[#3]=8, Time[#4]=6.7
2
Example
AVT Timed Event Adjustment
Note
If an adjustment of a timed event results in it being within 0.5 seconds of another timed event, the AVT Timed Event Adjustment will be raised and the retention times and timed events will be set back to the pre-adjustment values. The timed event and the time of the event will be reported with the alarm.
Using MON2020, select the **Chromatogram Viewer** on the **Chromatograph** menu.
Click **GC Archive**.
Look at the last AVT chromatogram.
Note
Click on the **Anly Type** column to sort the chromatograms by type.
Is the retention time for N-pentane greater than 115 seconds?
No
Is the retention time for ethane greater than 215 seconds?
No
Go to the Main Menu and select **Auto Valve Timing** from the **GC Control** menu.
Select the **Use module default** check box and then press ✔ .
If the AVT fails again, save the AVT report and the first and last AVT chromatograms and contact your local RAI service representative.
Yes
Yes
Exchange the module with one that has been overhauled and follow the overhaul procedure.
AVT Missing Peak: i-Pentane
Example
3
AVT Missing Peak
Note
If a peak cannot be found during a calibration, the AVT Peak ID Fail alarm will be raised and the retention times and timed events will be set back to the pre-adjustment values. The peak that could not be identified will be reported with the alarm.
Did you run the AVT with default values?
No
Using MON2020, select the **Chromatogram Viewer** on the **Chromatograph** menu.
Click **GC Archive**.
Look at the first AVT chromatogram.
Note
Click on the **Anly Type** column to sort the chromatograms by type.
Yes
Compare the retention times shown above each peak to the retention times in the Retention Times table to the right of the chromatogram.
Do they match?
No
Update the retention times in the table to match the retention times in the chromatogram and re-run the AVT with **current** values.
Yes
Download the first and last AVT chromatograms. Save the AVT report and contact your local RAI service representative.

B Pre-defined Modbus® map files

For the Modbus map files used with the gas chromatograph, see the Pre-Defined Modbus Map Files Reference Manual.

C China RoHS table

含有China RoHS管控物质超过最大浓度限值的部件型号列表 List of Model Parts with China RoHS Concentration above MCVs

有害物质 / Hazardous Substances ---> 部件名称 Part Name	铅 Lead (Pb)	汞 Mercury (Hg)	镉 Cadmium (Cd)	六价铬 Hexavalent Chromium (Cr +6)	多溴联苯 Polybrominated biphenyls (PBB)	多溴联苯醚 Polybrominated diphenyl ethers (PBDE)
电子组件 Electronics Assembly	X	O	O	O	O	O
壳体组件 Housing Assembly	O	O	O	X	O	O
传感器组件 Sensor Assembly	X	O	O	X	O	O
电池组件 Battery Assembly	X	O	O	O	O	O
加热炉组件 Oven Assembly	X	O	O	X	O	O

本表格系依据SJ/T11364的规定而制作。This table is proposed in accordance with the provision of SJ/T11364

O: 意为该部件的所有均质材料中该有害物质的含量均低于GB/T 26572所规定的限量要求。 Indicate that said hazardous substance in all of the homogeneous materials for this part is below the limit requirement of GB/T 26572.

X: 意为在该部件所使用的所有均质材料里，至少有一类均质材料中该有害物质的含量高于GB/T 26572所规定的限量要求。 Indicate that said hazardous substance contained in at least one of the homogeneous materials used forthis part is above the limit requirement of GB/T 26572.

7P00370-H01
Rev. K
2023

For more information: **Emerson.com**

©2023 Emerson. All rights reserved.

Emerson Terms and Conditions of Sale are available upon request. The Emerson logo is a trademark and service mark of Emerson Electric Co. Rosemount is a mark of one of the Emerson family of companies. All other marks are the property of their respective owners.

ROSEMOUNT™

EMERSON™