Instruction Manual

MORSØ Mitring Machine

Model F

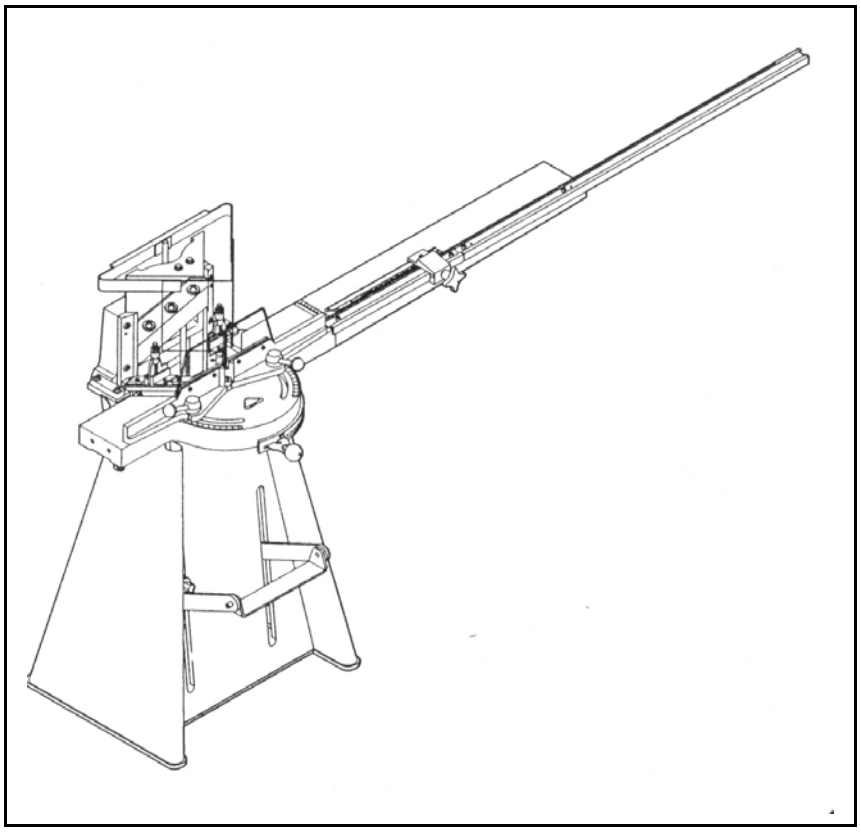

dan-list A/S
MASKINFABRIK
Haraldsvej 21 - DK-8960 Randers - Denmark
Tel.: +45 8643 5155 - Fax: +45 8643 5100
e-mail: danlist@danlist.dk
www.danlist.dk - www.danlistvideos.com

dan-list A/S
MASKINFABRIK
Haraldsvej 21 - DK-8960 Randers - Denmark
Tel.: +45 8643 5155 - Fax: +45 8643 5100
e-mail: danlist@danlist.dk
www.danlist.dk - www.danlistvideos.com

Contents

Introduction	page A-1
Functional Description:	
General Description	page B-1
Overview	page B-2
Machine Description	page B-3
Description of the Lever Linkage System	page B-4
Cutting Method	page B-5
Technical Data	page C-1
Dimensions of Work Pieces	page C-2
Assembly Instructions:	
General	page D-1
Mounting of Table Extension	page D-1
Mounting of Divided Beam	page D-1
Operating Instructions:	
Operating Devices	page E-1
Before operating	page E-2
Degree Adjustment of Fences	page E-3
Exact Adjustment of fences	page E-3
Adjustment of Length of Moulding	page E-4
DeLuxe Measuring Scale	page E-4-1
Adjustment of Rebate Supports	page E-5
Adjustment of Forward Movement	page E-5
Adjustment of Height Stop	page E-6
Working Procedure	page E-7
Post Working Procedure	page E-7
Service References:	
Lubrication Instructions	page F-1
Cleaning	page F-1
Changing of Knives	page F-2
Grinding of Knives	page F-3
Regulation of Draw Bar	page F-4
Adjustment of Forward Movement	page F-4
Adjustment of Springs	page F-5
Adjustment of Height Movement	page F-6
Changing of Spare Parts	page F-7

Rectifying Faults	
Methods for Repair	page G-1
Safety:	
Safety Devices	page H-1
Regulations	page H-2
Index of Spare Parts	
Overview	page I-1
Machine	page I-2
Knife Block Unit	page I-3
Drive Mechanism	page I-4
Rebate Supports	page I-5
Accessories	
Automatic Rebate Support Attachment	
Description	page L-1-1
Installation Instructions	page L-1-2
Adjustment of Rebate Supports	page L-1-3
Index of Spare Parts	page L-2

dan-list A/S
MASKINFABRIK
Haraldsvej 21 - DK-8960 Randers - Denmark
Tel.: +45 8643 5155 - Fax: +45 8643 5100
e-mail: danlist@danlist.dk
www.danlist.dk - www.danlistvideos.com

Introduction

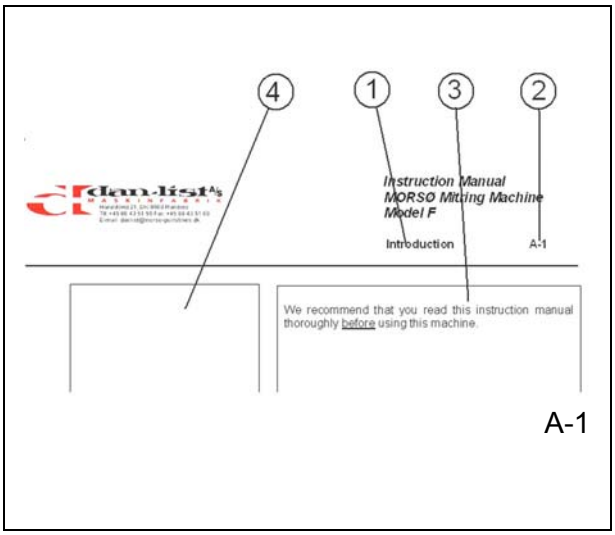

We recommend that you read this instruction manual thoroughly before using this machine.

Damage or faults on the machine caused by misuse or incorrect operation are not covered under our conditions of warranty.

Use of the Instruction Manual:

The reference system of this Instruction Manual described below will help you to quickly find the information you require (Picture A-1-1)

(1) Subject Heading

(2) Page Index
The letter (A) refers to the description of the section.
The number (1) refers to the page number of that section.

(3) Text
Description of the subject heading.

(4) Illustration
A three dimensional, numbered drawing of the text subject. The numbers in the text correspond to the numbers in the drawing.

dan-list A/S
MASKINFABRIK
Haraldsvej 21 - DK-8960 Randers - Denmark
Tel.: +45 8643 5155 - Fax: +45 8643 5100
e-mail: danlist@danlist.dk
www.danlist.dk - www.danlistvideos.com

General Description

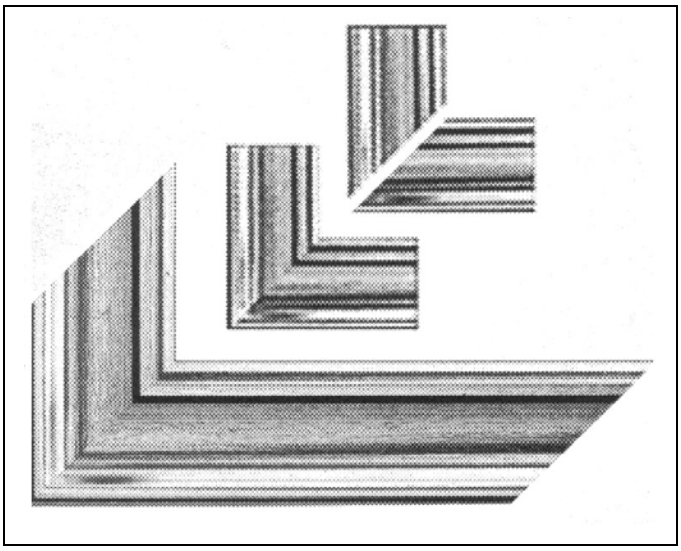

MORSØ-F mitring machine is an invaluable help to make perfect 45 degrees mitres in wooden mouldings for Picture Framers, and general woodworking, including Dado railings, Architraves, skirting boards and kitchen and bedroom wood mouldings.

MORSØ-F is a manual foot-operated machine. The operation is simple and effortless.

MORSØ-F mitring machine is provided with an adjustable moulding measurement stop, measuring scale for both length and width, available in metric and imperial, adjustable fences from 45 degrees through to 90 degrees on either side of the knife block, plus adjustable rebate supports.

MORSØ-F cuts a double mitre at 45 degrees and a single mitre up to 90 degrees.

MORSØ-F allows you to achieve a perfectly smooth, clean, and accurate finish, by nibbling the work piece in two cuts. Movement of the knife block (nibbling) forward and rearwards is a manual operation on the **MORSØ-F**.

The forward movement of the knife block is so arranged, that the final movement is half that of all previous movements, and is known as the ‘trim cut’.

A unique lever system ensures the cutting operation is effortless, and double return springs return the knife block to the start position.

The vertical movement of the knife block (length of stroke) is adjustable to suit the height of the work piece.

The pieces of moulding can be cut so accurately that they can be joined without further finishing.

dan-list A/S
MASKINFABRIK
Haraldsvej 21 - DK-8960 Randers - Denmark
Tel.: +45 8643 5155 - Fax: +45 8643 5100
e-mail: danlist@danlist.dk
www.danlist.dk - www.danlistvideos.com

Overview

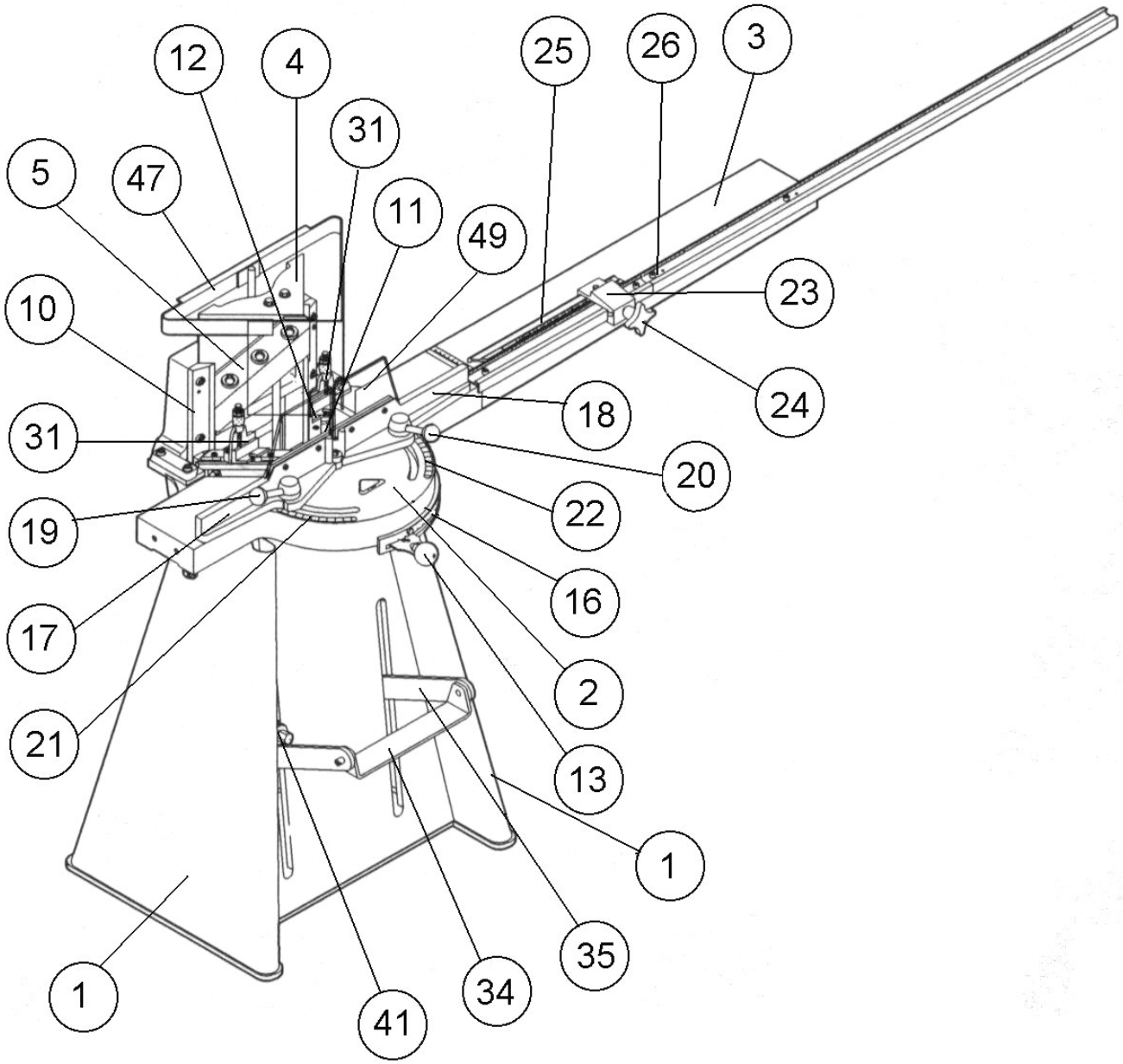

dan-list A/S
MASKINFABRIK
Haraldsvej 21 - DK-8960 Randers - Denmark
Tel.: +45 8643 5155 - Fax: +45 8643 5100
e-mail: danlist@danlist.dk
www.danlist.dk - www.danlistvideos.com

Overview					
Pos.	**Designation**	**Pos.**	**Designation**	**Pos.**	**Designation**
1	Frame	**20**	Hand Lever, Fence, right hand	**34**	Foot Pedal
2	Machine Table			**35**	Foot Pedal Tipper
3	Table Extension	**21**	Scale in Degrees, Fence, left hand	**36**	Lock Nut *
4	Knife Block			**37**	Nut *
5	Knives	**22**	Scale in Degrees, Fence, right hand	**38**	Draw Bow *
6	Knife Bolt *			**39**	Draw Bow Holder *
7	Knife Bolt *	**23**	Stop Block	**40**	Draw Bar *
8	Knife Bolt *	**24**	Star Wheel	**41**	Height Stop
9	Bottom Knives *	**25**	Stop Beam	**42**	Springs *
10	Vertical Slide Frame	**26**	Measuring Scale	**43**	Spring Anchor *
11	Cross	**27**	Pin *	**44**	Nut *
12	Guides	**28**	Bolt *	**45**	Outer Washer *
13	Lever	**29**	Pin *	**46**	Lever System *
14	Lock-nut *	**30**	Cylinder Screw *	**47**	Safety Guard
15	Off Set Bush *	**31**	Rebate Supports	**48**	Star Wheel *
16	Tooth Arc	**32**	Knurled Lock Nut, Rebate Support *	**49**	Safety Guards, Fences
17	Fence, left hand				
18	Fence, right hand	**33**	Knurled Nut, Rebate Support *		
19	Hand Lever, Fence, left hand				* = not shown/indicated

dan-list A/S
MASKINFABRIK
Haraldsvej 21 - DK-8960 Randers - Denmark
Tel.: +45 8643 5155 - Fax: +45 8643 5100
e-mail: danlist@danlist.dk
www.danlist.dk - www.danlistvideos.com

Machine Description

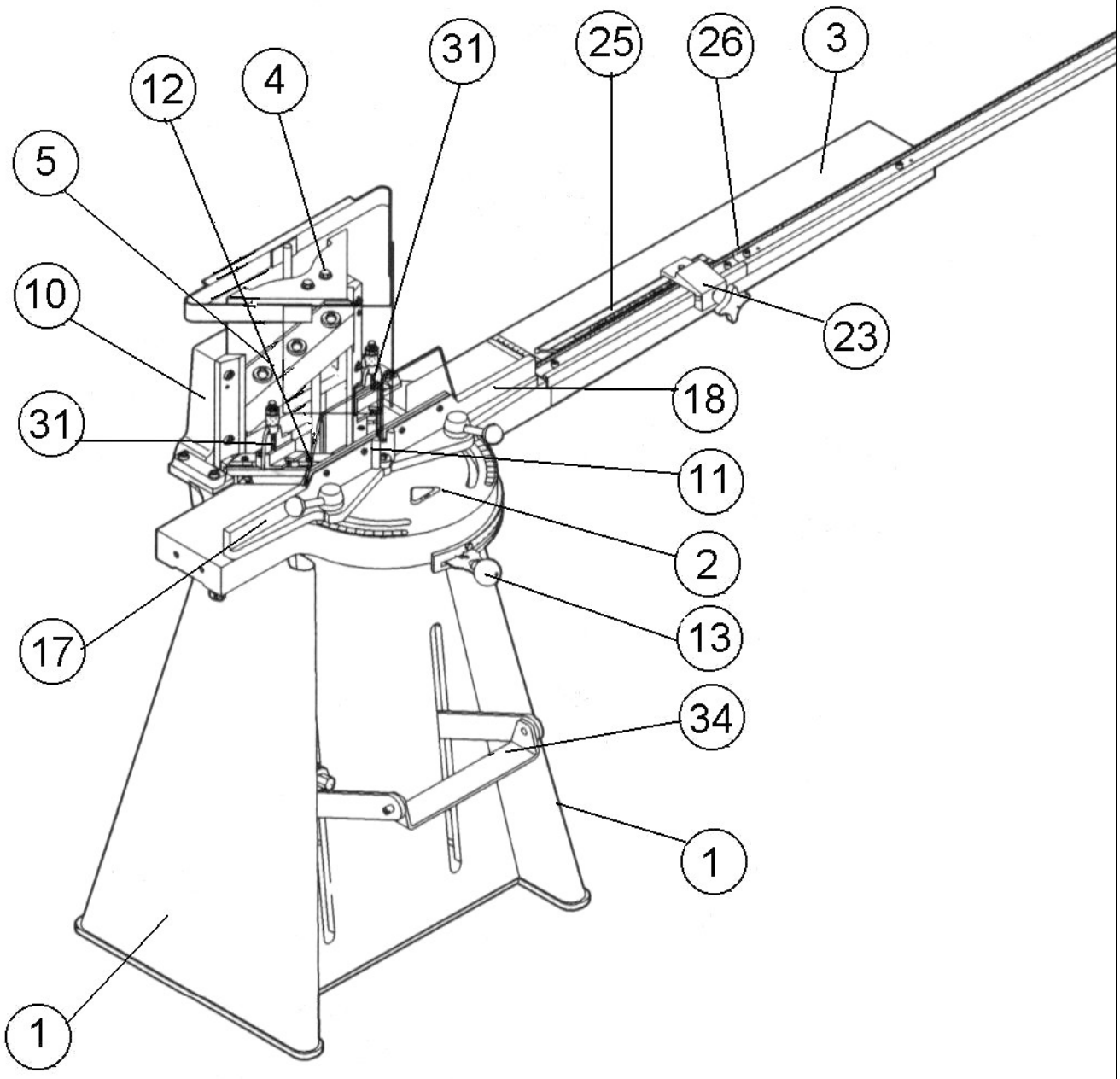

B-3

dan-list A/S
MASKINFABRIK
Haraldsvej 21 - DK-8960 Randers - Denmark
Tel.: +45 8643 5155 - Fax: +45 8643 5100
e-mail: danlist@danlist.dk
www.danlist.dk - www.danlistvideos.com

Machine Description

The **MORSØ-F** is constructed as a compact machine with a sturdy frame (1) and built in lever system (46) (not shown).

The cutting assembly is situated on top of the machine.

The knife block (4) slides up and down in the slide frame (10) fitted at the cross (11), and forwards and rearwards in the guides (12) and a cross guide in the table (2).

The razor sharp knives (5) bolted onto the knife block (4) effectively cut the mouldings.

The forward and rearward movement of the knife block assembly is operated manually by the lever (13) at the front of the table (2).

The vertical movement of the knife block is achieved by pressing the foot pedal (34) downwards. The built in lever system makes this operation effortless. Double heavy duty return springs (42) (not shown) return the knife block to the start position.

The moulding is placed on the table (2) against the fences (17) + (18) which has been adjusted to the required angle (usually 45 degrees), and the rebate supports (31) are adjusted to the height and depth of the moulding rebate.

The required length of the moulding is selected by movement of the moulding stop block (23) and the stop beam (25). Measurement of the work piece length can be read off the measurement facility (26) located on the table extension (3).



Beware of the extremely sharp knives

dan-list A/S
MASKINFABRIK
Haraldsvej 21 - DK-8960 Randers - Denmark
Tel.: +45 8643 5155 - Fax: +45 8643 5100
e-mail: danlist@danlist.dk
www.danlist.dk - www.danlistvideos.com

Description of the Lever System

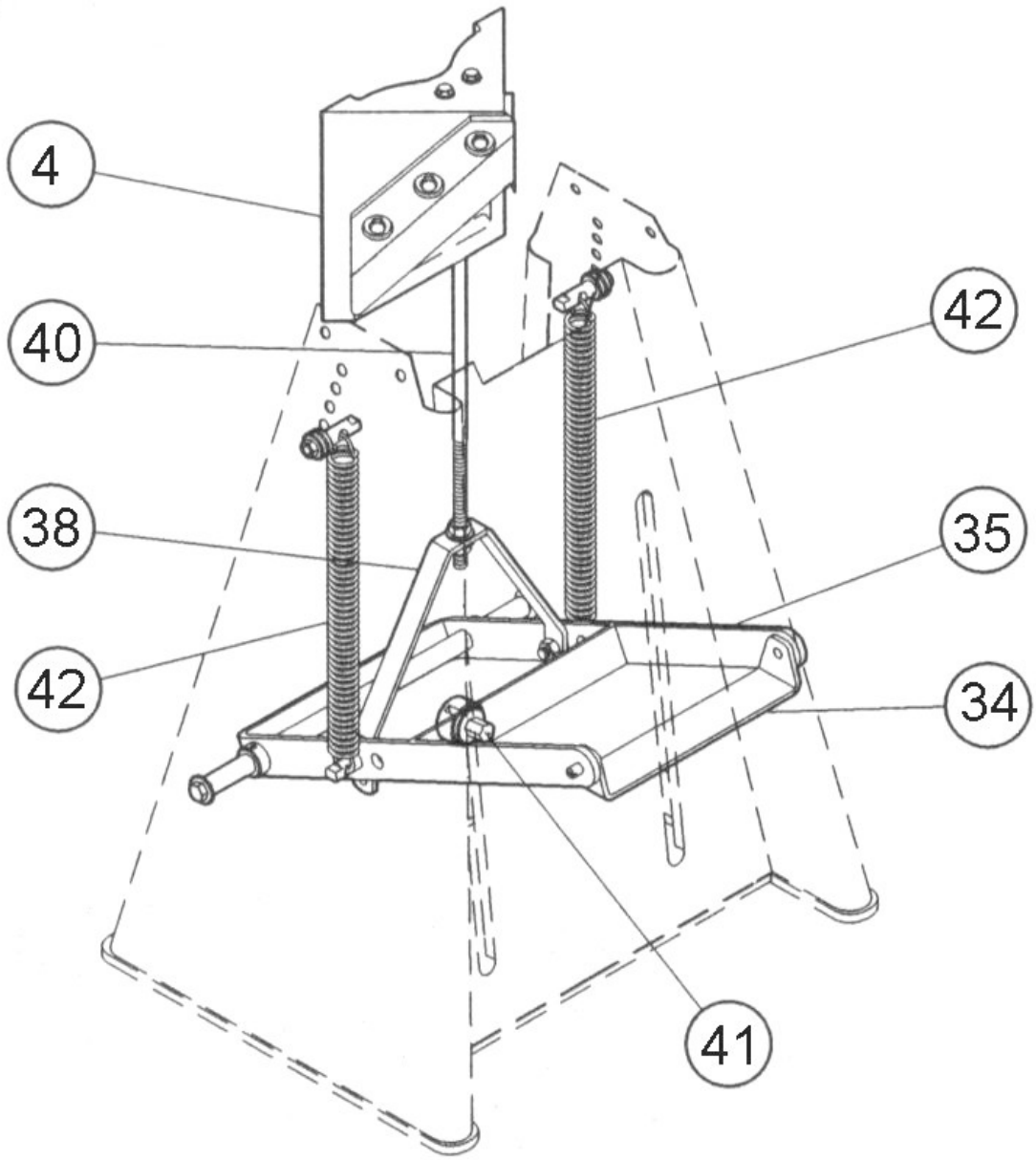

B-4

dan-list A/S
MASKINFABRIK
Haraldsvej 21 - DK-8960 Randers - Denmark
Tel.: +45 8643 5155 - Fax: +45 8643 5100
e-mail: danlist@danlist.dk
www.danlist.dk - www.danlistvideos.com

Description of the Lever System

The cutting movement is achieved manually.

The vertical length of the stroke of the knives is adjusted at the factory to 165 mm, but this can be re-adjusted to max. 200 mm, if necessary, (see chapter F-6).

The cutting action is achieved by a foot operated lever mechanism.

The pedal (34) is pressed down.

The foot pedal tipper (35) pulls the draw bow (38), draw bar (40), and the knife block (4) down.

Double return springs (42) ensure the pedal (34) and knife block (4) are returned to the start position when the foot pressure is relieved from the foot pedal.

There is an adjustable pedal height stop facility (41), which can also be used as a safety feature to lock the knife block and knives in the down position.



Beware of the extremely sharp knives

dan-list A/S
MASKINFABRIK
Haraldsvej 21 - DK-8960 Randers - Denmark
Tel.: +45 8643 5155 - Fax: +45 8643 5100
e-mail: danlist@danlist.dk
www.danlist.dk - www.danlistvideos.com

Cutting Method

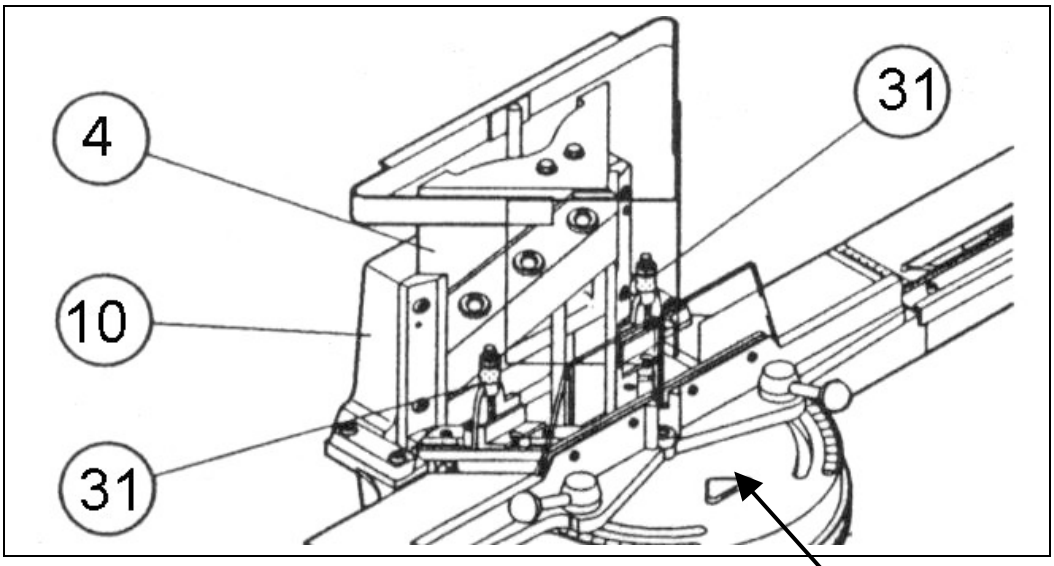

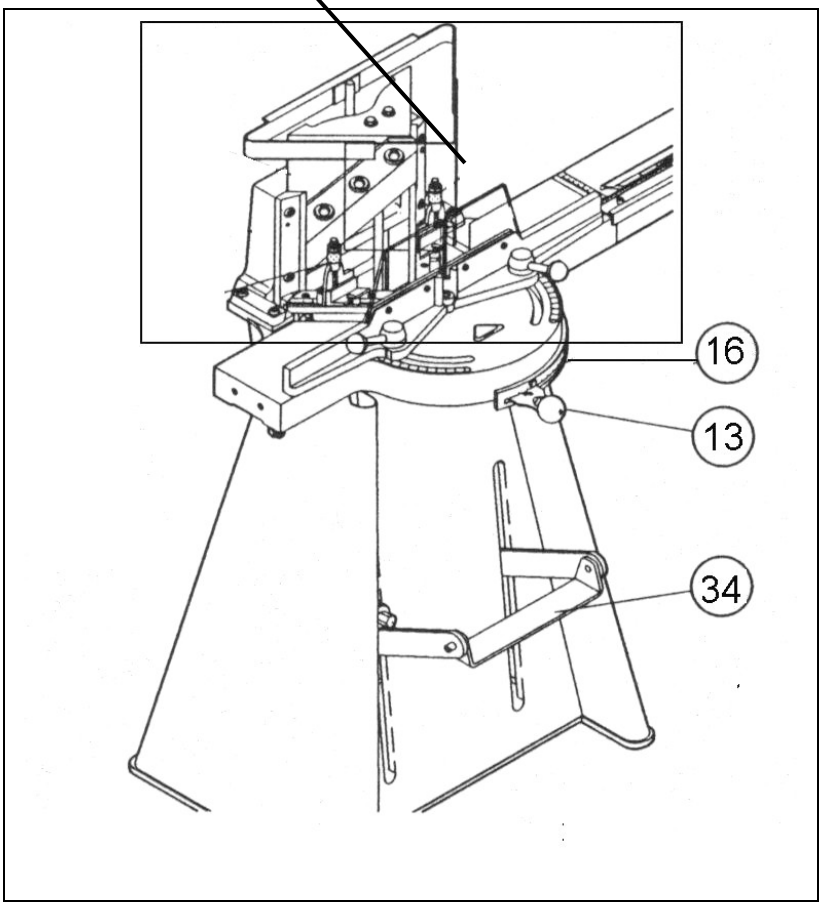

B-5

dan-list A/S
MASKINFABRIK
Haraldsvej 21 - DK-8960 Randers - Denmark
Tel.: +45 8643 5155 - Fax: +45 8643 5100
e-mail: danlist@danlist.dk
www.danlist.dk - www.danlistvideos.com

Cutting Method

Prior to operation, the knife block (4) is in its topmost position and the sliding frame (10) in its rearmost position.

If the moulding to be cut has a rebate, the rebate supports (31) are adjusted to the required height.

The forward and rearward movement of the knife block (nibbling facility) is achieved manually by moving the lever (13) into one of the notches available in the tooth arc (16), which is suitable for the first cut.

To prolong the life of the knife blades, and achieve a perfect finish, three or four 'nibbles' of the moulding should be made, remembering that the final notch is half the distance of the remainder of the notches, and should always be used, as it is the 'trim' cut.

The pedal (34) is pressed downwards, and the cut is made. Relieving the foot pressure allows the double return springs to return the knife block (4) back to the start position ready for the next cut.

The lever (13) is now moved a couple of notches further to the right, depending on the hardness of the wood, and the next cut is made. The penultimate cut should ALWAYS be made on the next to last notch, allowing the final cut to be the 'trim' cut.

Even with small mouldings it is recommended to adopt this procedure, because even though the machine is capable of cutting through quite large mouldings in one cut, the drawbacks are many, including bruising the moulding, shattering synthetic mouldings, reduced knife blade life, poor finish and excessive foot pressure required.



Beware of the extremely sharp knives

dan-list A/S
MASKINFABRIK
Haraldsvej 21 - DK-8960 Randers - Denmark
Tel.: +45 8643 5155 - Fax: +45 8643 5100
e-mail: danlist@danlist.dk
www.danlist.dk - www.danlistvideos.com

Technical Data

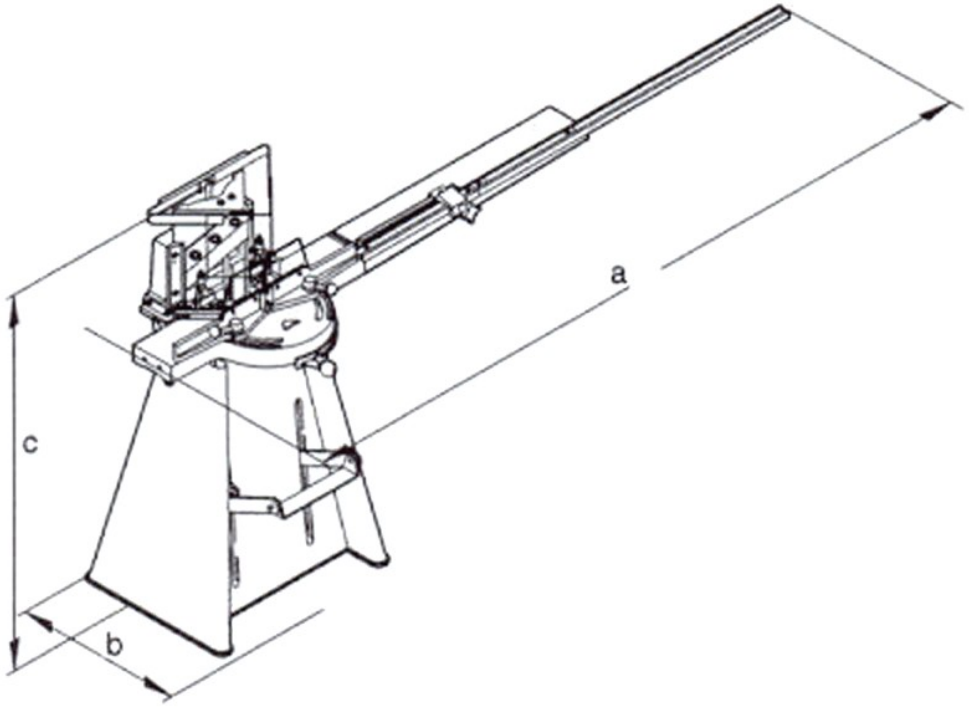

Technical Data			
Machine Dimensions (max.):		**Working Capacity:**	
Length (a)	2.200 mm	Double Mitre	45°
Width (b)	510 mm	Single Mitre (left-right) up to	90°
Height (c)	1150 mm	Length of Moulding from 100 mm to max	1,500 mm
Weight	90 kg		
Siting Considerations		Working Width (max.) *	100 mm
Distance to Wall	min.1000 mm	Working Height (max.)*	145 mm
Noise/Pollution:		Square Cutting (max.)	65/65 mm
Noise Level	silent	Measuring Scale (up to)	1,500 mm
Pollution	nil/no dust		

*see diagram, page C-2 and service F-6

Dimensions of Work Piece

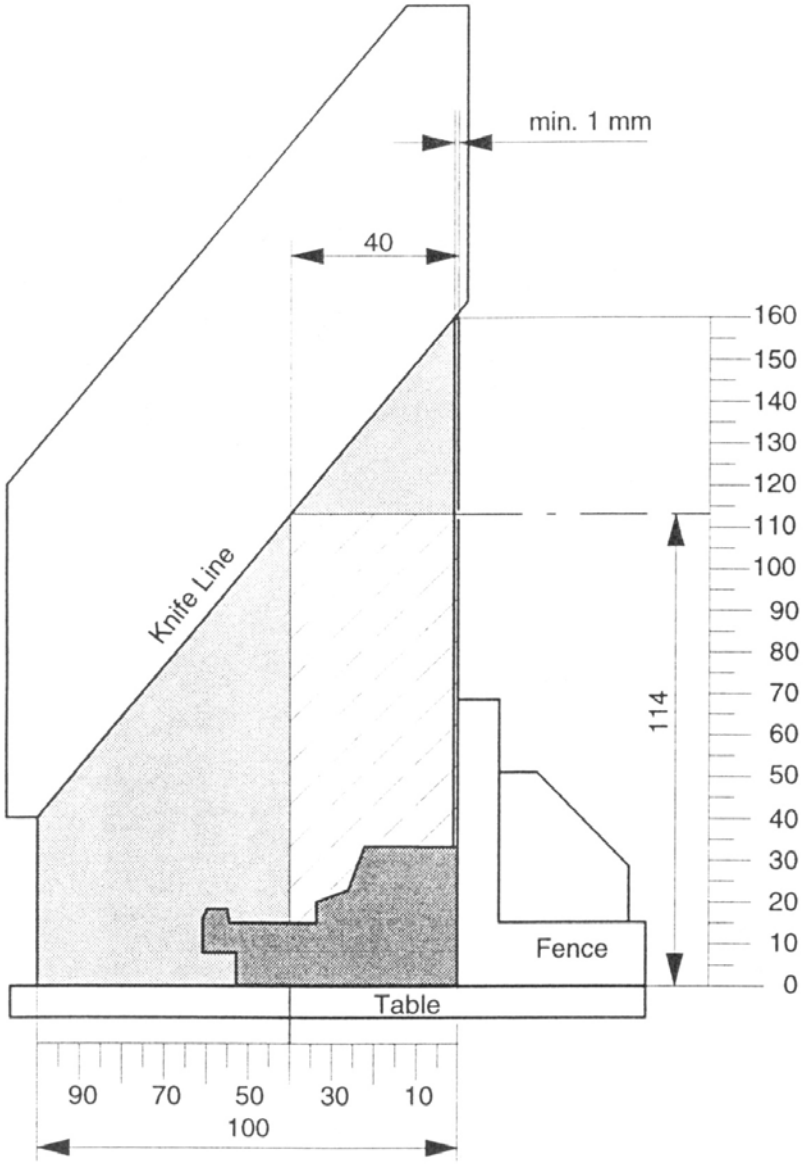

Using the diagram both the width and height of the cross section of the work piece can be determined.

The knife line determines the max. height.
On the right (vertical) measuring scale the height can be read, and on the horizontal measuring scale the width can be read.

Please Note:
The factory preset the cutting height to 145 mm as standard.
Should you require a max. cutting height of 185 mm.
Please see Service, page F-6.



Beware of the extremely sharp knives

dan-list A/S
MASKINFABRIK
Haraldsvej 21 - DK-8960 Randers - Denmark
Tel.: +45 8643 5155 - Fax: +45 8643 5100
e-mail: danlist@danlist.dk
www.danlist.dk - www.danlistvideos.com

In General

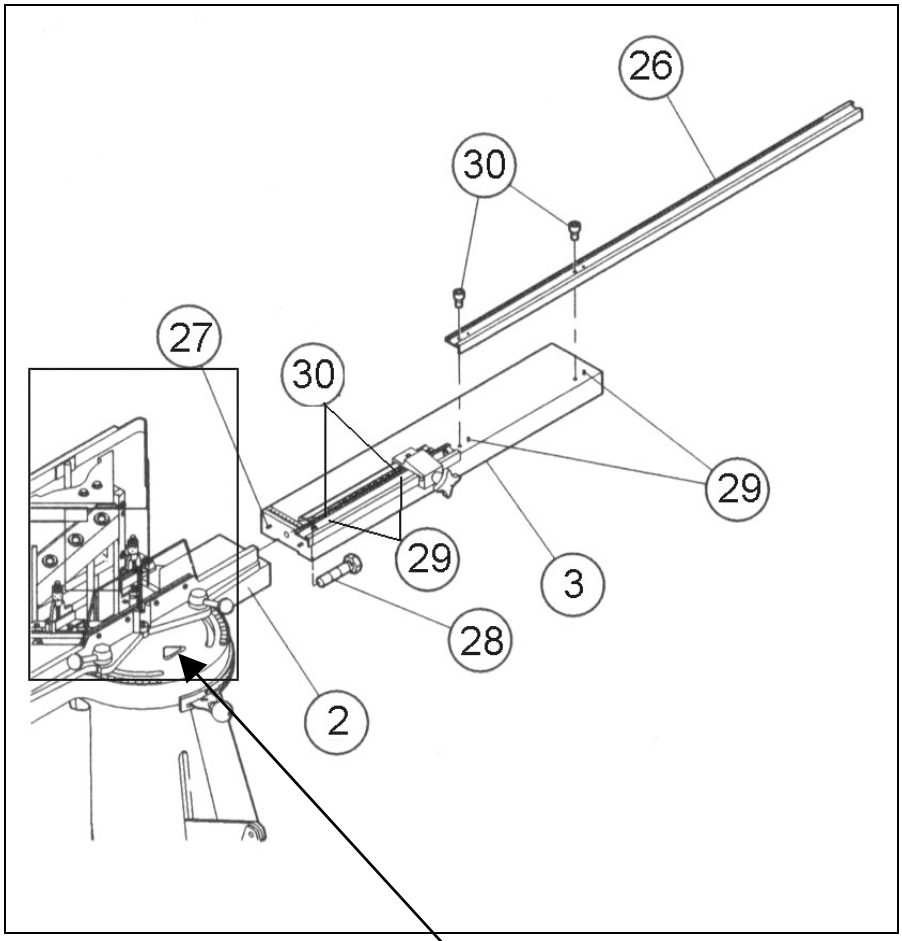

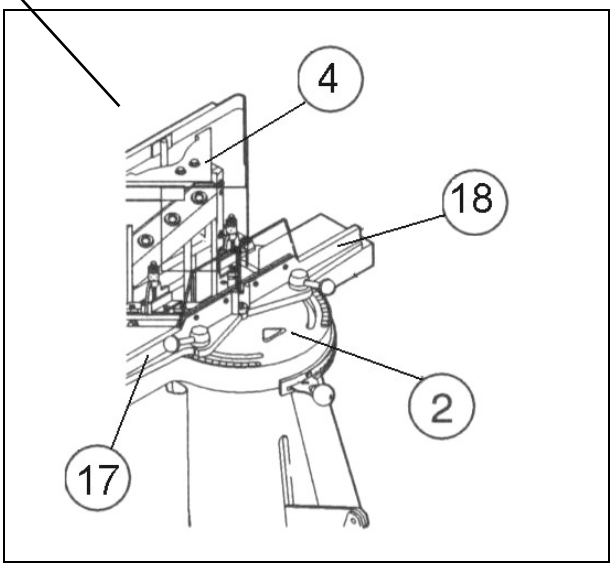

D-1

dan-list A/S
MASKINFABRIK
Haraldsvej 21 - DK-8960 Randers - Denmark
Tel.: +45 8643 5155 - Fax: +45 8643 5100
e-mail: danlist@danlist.dk
www.danlist.dk - www.danlistvideos.com

In General

The machine is delivered assembled ready for use, except for the table extension (3) and divided beam (26) which are disassembled during transit. The machine comes complete with all standard equipment.

NOTE:
a. After unpacking, and prior to initial operation, *REMOVE THE TRANSIT LOCKING PIN* located in centre of the machine table (2), and coloured black/yellow.
b. The knife block (4) is moved midway between the fences (17-18) and maximum rearwards travel, and the waste chute is fitted.

The distance between the location of the machine and any wall or obstruction should be as per C-1. The machine may be secured to the floor with suitable screws through the two holes in the base frame of the machine. Although the machine can be operated without being secured to the floor, we do recommend as a safety measure that you secure it in its location as soon as practicable.

CAUTION:
Before each and every operation, ensure that ***all safety protection devices are in place and correctly fitted.***

Fitting of the Table Extension and Divided Beams

Before fitting the table extension (3) both the table extension ends and the table end (2) where they abut must be scrupulously cleaned, including screw holes and pins. The tiniest amount of grit may prevent correct alignment.

After cleaning, the table extension (3) is offered up to the table so that the pins (27) align with the pin holes. A second pair of hands is extremely useful here, and the bolt (28), which is supplied, can be inserted into its hole and tightened with a 19 mm socket wrench.

The divided beam (26) can now be attached to the table extension (3). Located with the pins (29) which are part of the table extension, and secured with the fixings provided (30).

(An extra table extension, complete with supporting leg is available as an accessory).



Beware of the extremely sharp knives

dan-list A/S
MASKINFABRIK
Haraldsvej 21 - DK-8960 Randers - Denmark
Tel.: +45 8643 5155 - Fax: +45 8643 5100
e-mail: danlist@danlist.dk
www.danlist.dk - www.danlistvideos.com

Operating Devices

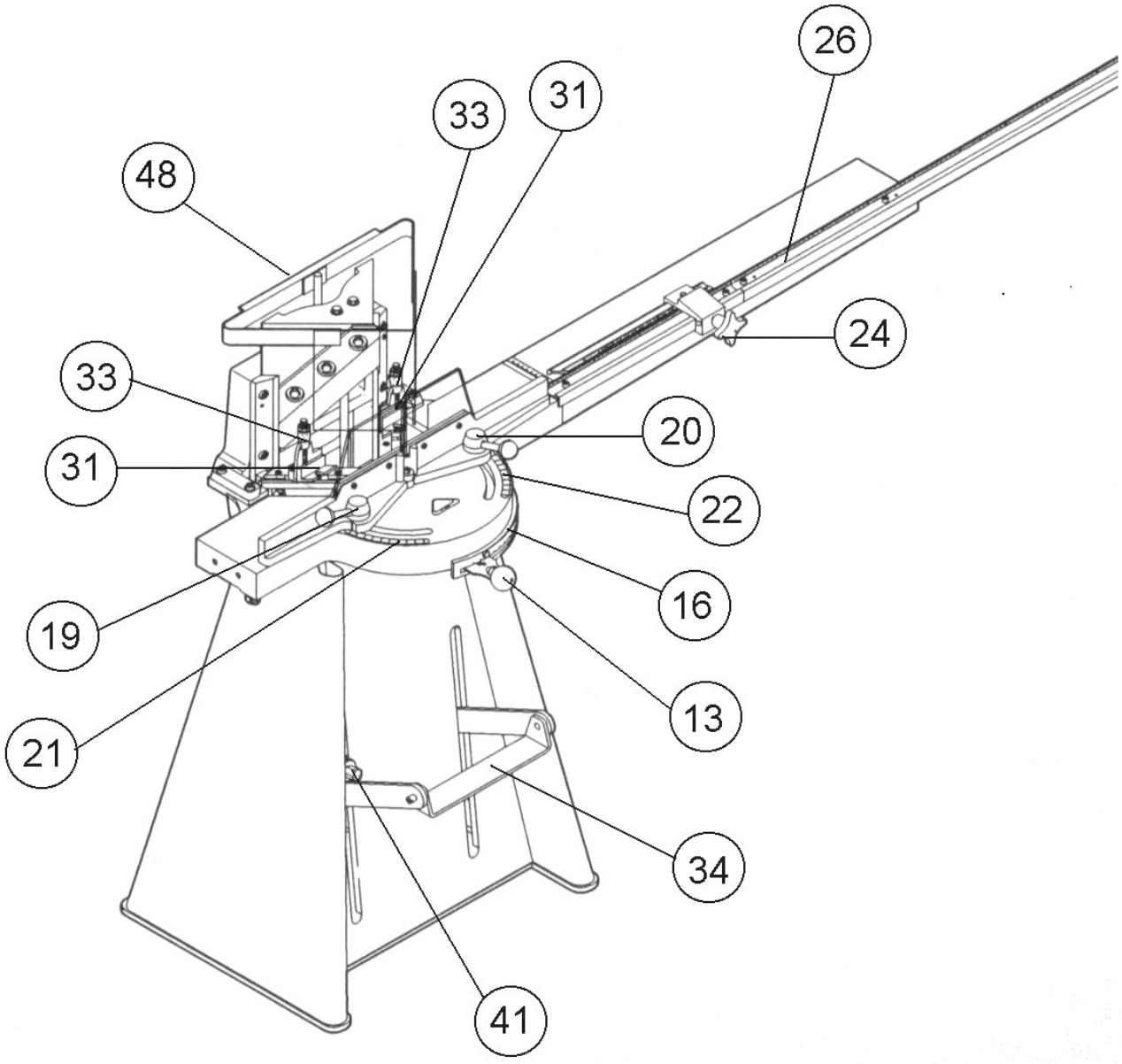

E-1

danlist A/S
MASKINFABRIK
Haraldsvej 21 - DK-8960 Randers - Denmark
Tel.: +45 8643 5155 - Fax: +45 8643 5100
e-mail: danlist@danlist.dk
www.danlist.dk - www.danlistvideos.com

Operating Devices	
19 = Handle - secures the left hand fence	**24** = Star Wheel – tightens, to secure the measurements stop.
21 = Scale – in degrees for adjustment of left hand fence	**26** = Scale (Rule) – in inches or mm, facilitates measurement of work piece to be cut.
20 = Handle - secures the right hand fence	**34** = Foot pedal - cutting function of the knife block when pressed down.
22 = Scale – in degrees for adjustment of right hand fence	**41** = Travel lock bolt – adjustment lock determines the height stop for the pedal/knife block. (Can also be used to lock the pedal/knife block in the down position as a safety feature at cessation of work).
31 = Rebate Support	**48** = Star wheel – secures the safety guard in place
33 = Knurled Nut - height adjustment of rebate supports	
13 = (Hand) Lever - movement from left to right - moves knife block forward or back. (Should ALWAYS be pressed down during movement to stop the tooth wearing in the tooth arc as it travels over the notches.)	
16 = Tooth Arc – regulates the left and right movement of the lever (13). Remember, the last tooth spacing is half that of the other teeth, because it is the 'trim cut'.	

.



Beware of the extremely sharp knives

dan-list A/S
MASKINFABRIK
Haraldsvej 21 - DK-8960 Randers - Denmark
Tel.: +45 8643 5155 - Fax: +45 8643 5100
e-mail: danlist@danlist.dk
www.danlist.dk - www.danlistvideos.com

Before Operating

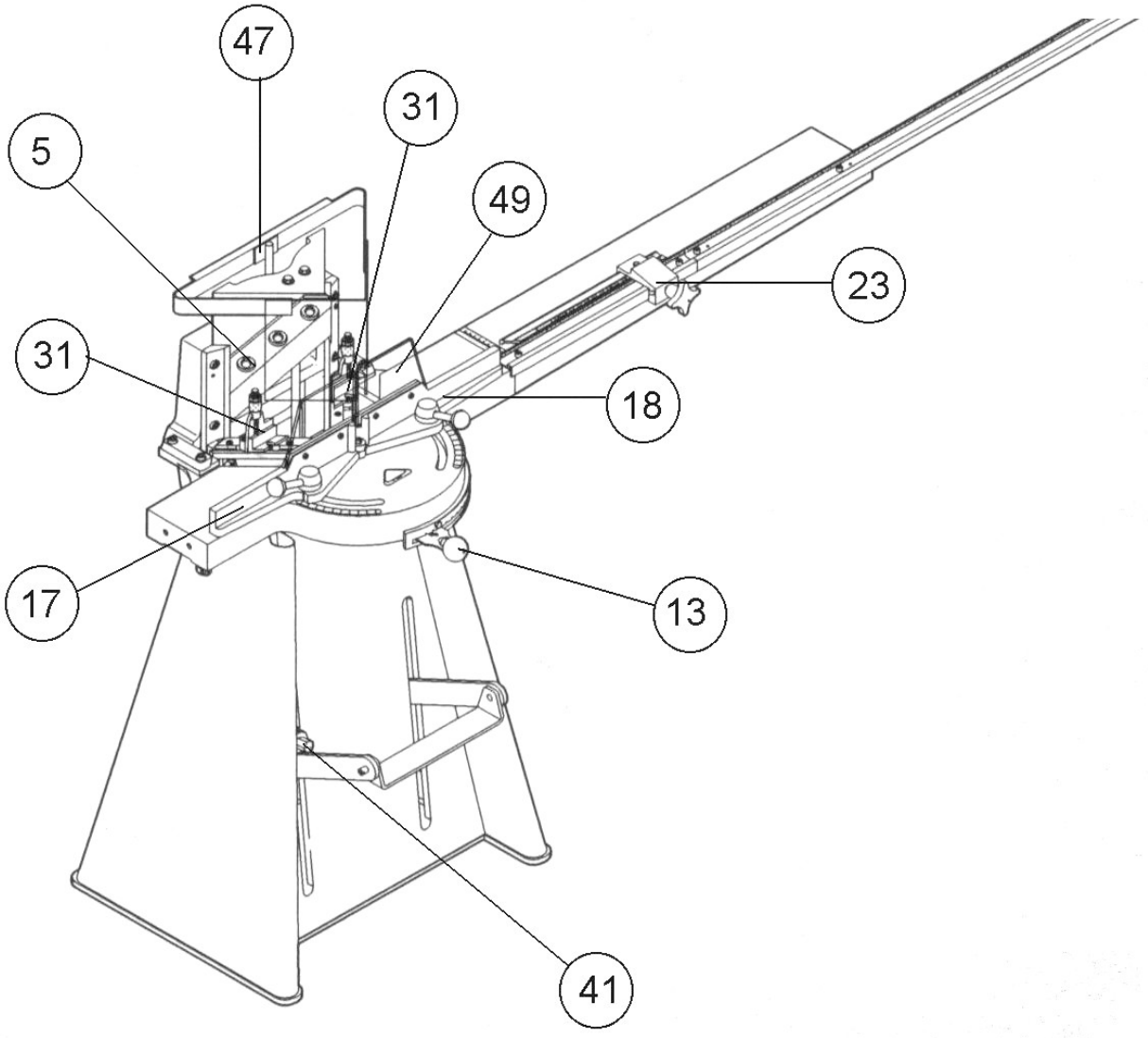

E-2

dan-list A/S
MASKINFABRIK
Haraldsvej 21 - DK-8960 Randers - Denmark
Tel.: +45 8643 5155 - Fax: +45 8643 5100
e-mail: danlist@danlist.dk
www.danlist.dk - www.danlistvideos.com

Before Operating

Before operating the machine the following must be checked and adjusted:

1. Check

a) Knives (5)
General condition
Sharpness

b) Waste
Room for waste cuttings

c) Safety devices
Fitting of all safety devices:
Safety guard for knives (47)
Safety guards on fences (49)

d) Table and table extension
Cleanliness and undamaged surface

2. Adjustments

a) The angle of the fences (17+18)
(adjustment instructions page E-3)

b) Length of moulding (23)
(adjustment instructions page E-4)

c) Rebate supports (31)
(adjustment instructions page E-5)

d) Forward movement (13)
(adjustment instructions page E-5)

e) Height stop (41)
(adjustment instructions page E-6)



Beware of the extremely sharp knives

dan-list A/S
MASKINFABRIK
Haraldsvej 21 - DK-8960 Randers - Denmark
Tel.: +45 8643 5155 - Fax: +45 8643 5100
e-mail: danlist@danlist.dk
www.danlist.dk - www.danlistvideos.com

Degree Adjustment of Fences - Exact Adjustment of the Fences

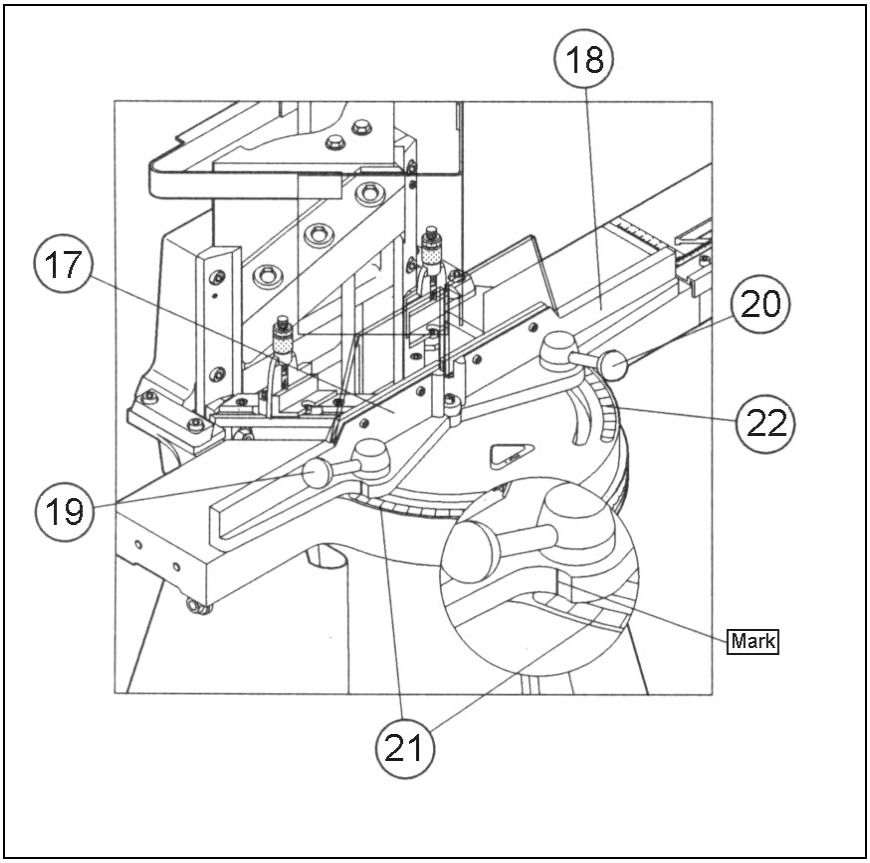

E-3-1

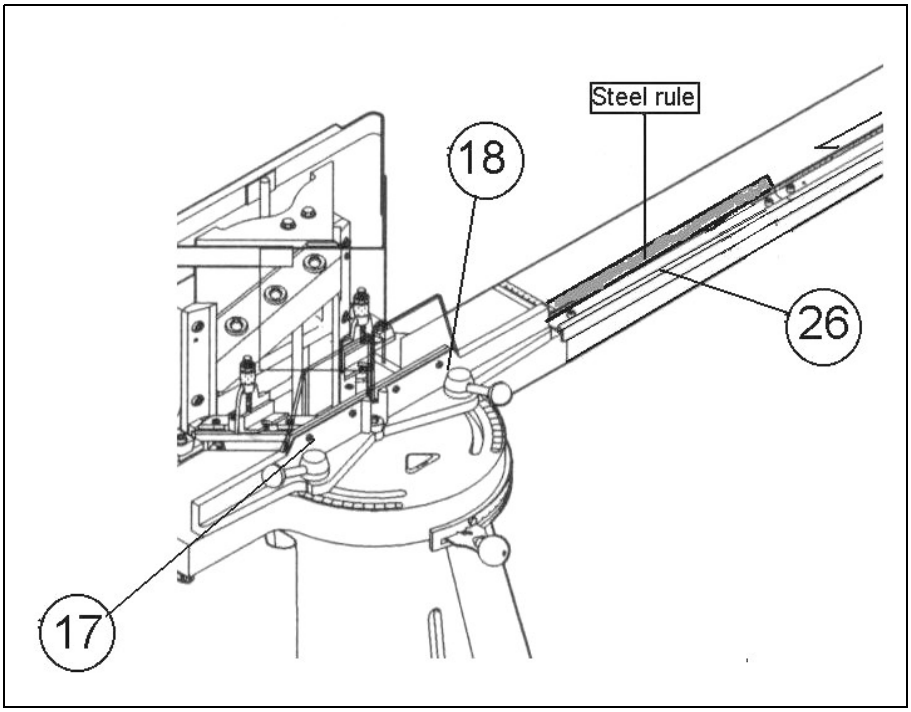

E-3-2

Degree Adjustment of Fences (Fig. E-3-1)

The fences (17) + (18) can be adjusted as required (from the factory they are adjusted to 45° for a double mitre).

If, for instance, you want to make a 6-sided (hexagonal) frame the following procedure is used:

6 pieces of moulding are cut in the normal way at 45° so that the inside measurement of each piece of moulding is equal to the finished inside measure of the frame plus approx. the width of the rebate.

Hand levers (19) and (20) are loosened and the fences are turned according to the scales (21) + (22) to 60°.

The degree adjustment is read by means of the mark.

After the adjustment the hand levers (19) and (20) are fastened again, and all moulding ends are cut separately at 60° - single mitre.

Exact Adjustment of the Fences (Fig. E-3-2)

When the fences have been adjusted to degrees other than 45°, the correct re-adjustment to 45° is made as follows:

Place a straight steel rule against the measuring scale (26) so that it overlaps the whole of the right fence (18). Now, adjust the right fence (18) according to the steel rule, and the right fence (18) will be adjusted to exactly 45°.

Place the steel rule against the right fence (18) (now exactly adjusted at 45°), so that it overlaps the whole of the left hand fence and proceed as mentioned above with the adjustment of the left fence (17).



Beware of the extremely sharp knives

dan-list A/S
MASKINFABRIK
Haraldsvej 21 - DK-8960 Randers - Denmark
Tel.: +45 8643 5155 - Fax: +45 8643 5100
e-mail: danlist@danlist.dk
www.danlist.dk - www.danlistvideos.com

Adjustment of Length of Moulding

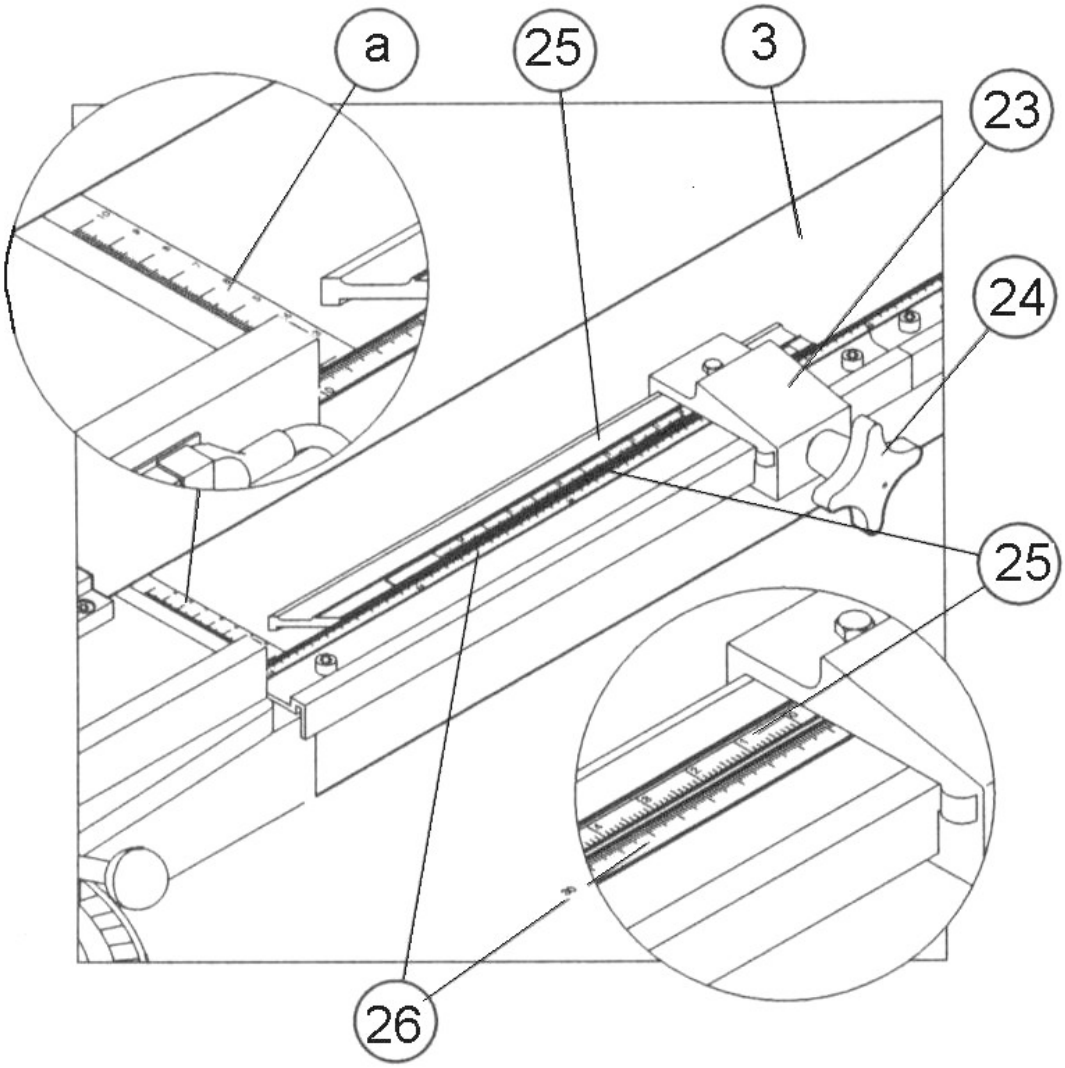

E-4

dan-list A/S
MASKINFABRIK
Haraldsvej 21 - DK-8960 Randers - Denmark
Tel.: +45 8643 5155 - Fax: +45 8643 5100
e-mail: danlist@danlist.dk
www.danlist.dk - www.danlistvideos.com

Adjustment of Length of Moulding

Principle:
The inside measurement of a frame = outside measurement less 2 times the width of the moulding – excluding the width of the rebate (if both ends are cut at 45°.)
The width of the moulding is measured by means of the measuring scale (a) on the table extension (3).

The length of the moulding is measured by means of the measuring scale (26) on the table extension (3) and the measuring scale on the stop beam (25). The measuring scale on the stop beam (25) is carried out in double measures.

Outside measurement of the frame:

1. Star wheel (24) on stop block (23) is loosened.

2. The required length of moulding is, say, 29 cm.
   The mark "0" on scale on stop beam (25) is adjusted exactly opposite the 29 cm mark on the measuring scale (26) on the table extension. The out-side measures of the frame will be 29 cm.

3. Star wheel (24) is tightened.

Inside measurement of the frame:

1. Star wheel (24) on the stop block (23) is loosened.

2. The width of the moulding, excluding the rebate (e.g. 3.5 cm) is read off the scale (a) on the table extension (3).

3. The required length of moulding is 27 cm.
   The 3.5 cm mark on scale on the stop beam (25) is adjusted exactly opposite the 27 cm mark on the measuring scale (26) on the table extension (3). The inside measures of the frame will be 27 cm.

4. Star wheel (24) is tightened.



Beware of the extremely sharp knives

dan-list A/S
MASKINFABRIK
Haraldsvej 21 - DK-8960 Randers - Denmark
Tel.: +45 8643 5155 - Fax: +45 8643 5100
e-mail: danlist@danlist.dk
www.danlist.dk - www.danlistvideos.com

Measuring Scale De-Luxe

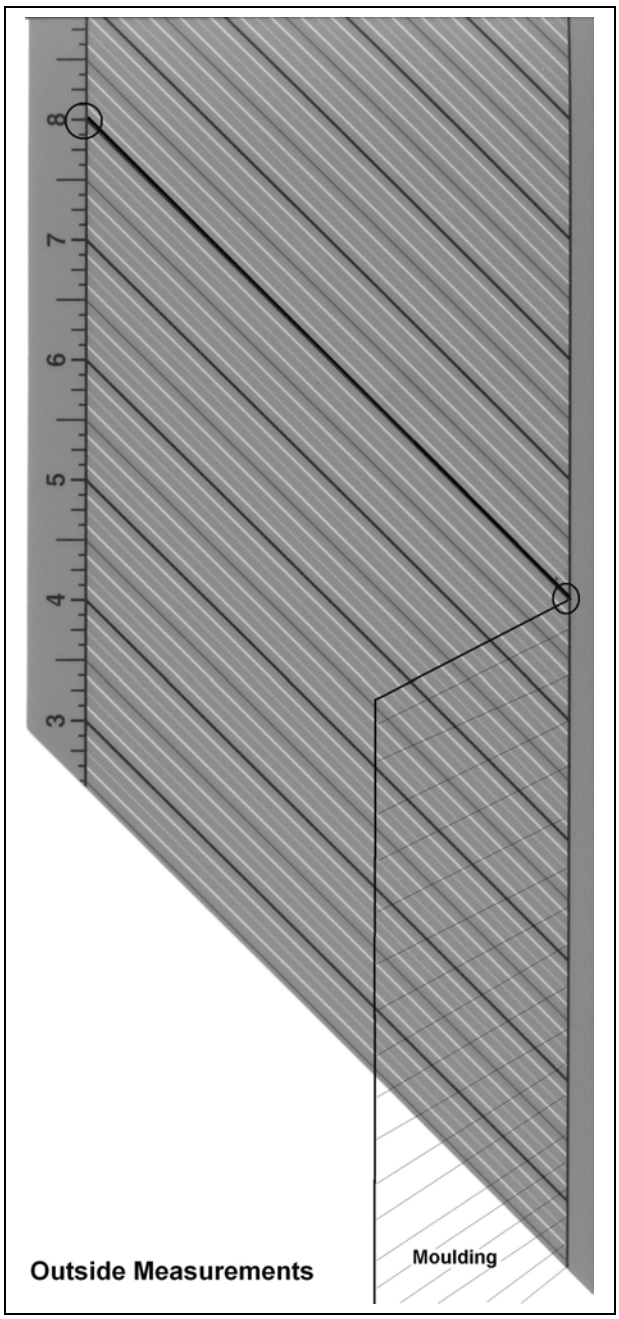

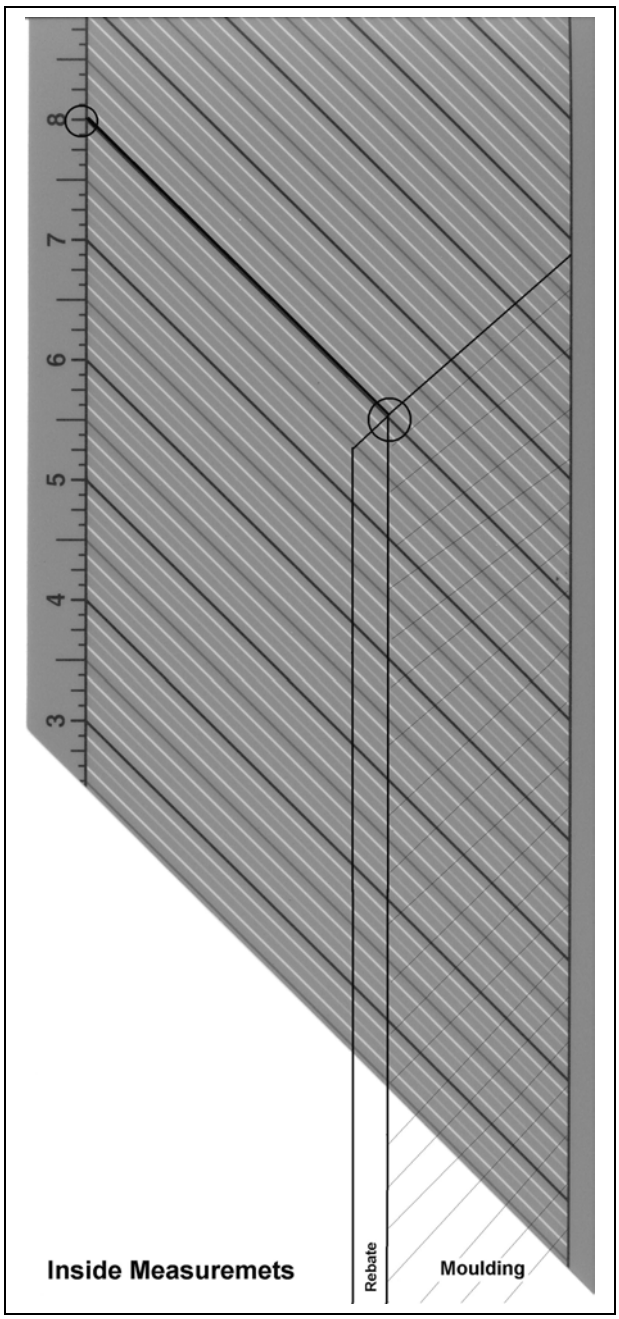

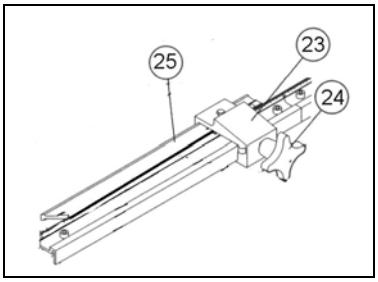

E-4-1

dan-list A/S
MASKINFABRIK
Haraldsvej 21 - DK-8960 Randers - Denmark
Tel.: +45 8643 5155 - Fax: +45 8643 5100
e-mail: danlist@danlist.dk
www.danlist.dk - www.danlistvideos.com

Measuring Scale De-Luxe

Principle:

The measuring scale engraved in the table indicates the distance from the right knife in inches. E.G. the line marked 8 has a distance of 8 inches from the right knife.

Outside measurement:
To make a frame of 8 x 6 inches outside measurement proceed as follows:

Cut the right hand side of the moulding to 45°. Place the moulding on the table so that the end of the moulding is exactly at the line marked 8.

Push the movable stop beam (25) against the end of the moulding, and tighten it by means of the stop block (23) and star wheel (24).

Cut two pieces of moulding.

Repeat the procedure as described above, but use the line marked 6 instead of 8.

Inside measurement:
To make a frame of 8 x 6 inches inside measurement proceed as follows:

Cut the right hand side of the moulding to 45°. Place the moulding on the table so that the corner between the start of the rebate and the end of the moulding is exactly at the line marked 8.

Push the movable stop beam (25) against the end of the moulding, and tighten it by means of the stop block (23) and star wheel (24).

Cut two pieces of moulding.

Repeat the procedure as described above, but use the line marked 6 instead of 8.

You can now make a frame which fits a picture of 8 x 6 inches.

The same procedure is adopted for machines engraved in metric.



Beware of the extremely sharp knives

dan-list A/S
MASKINFABRIK
Haraldsvej 21 - DK-8960 Randers - Denmark
Tel.: +45 8643 5155 - Fax: +45 8643 5100
e-mail: danlist@danlist.dk
www.danlist.dk - www.danlistvideos.com

Adjustment of Rebate Supports - Adjustment of the Forward Movement

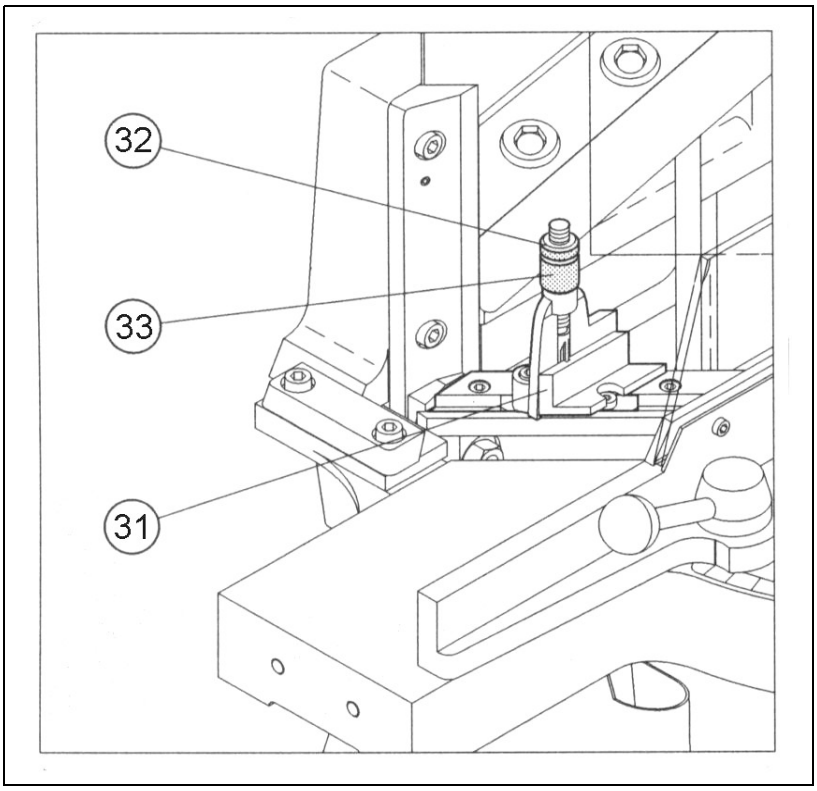

E-5-1

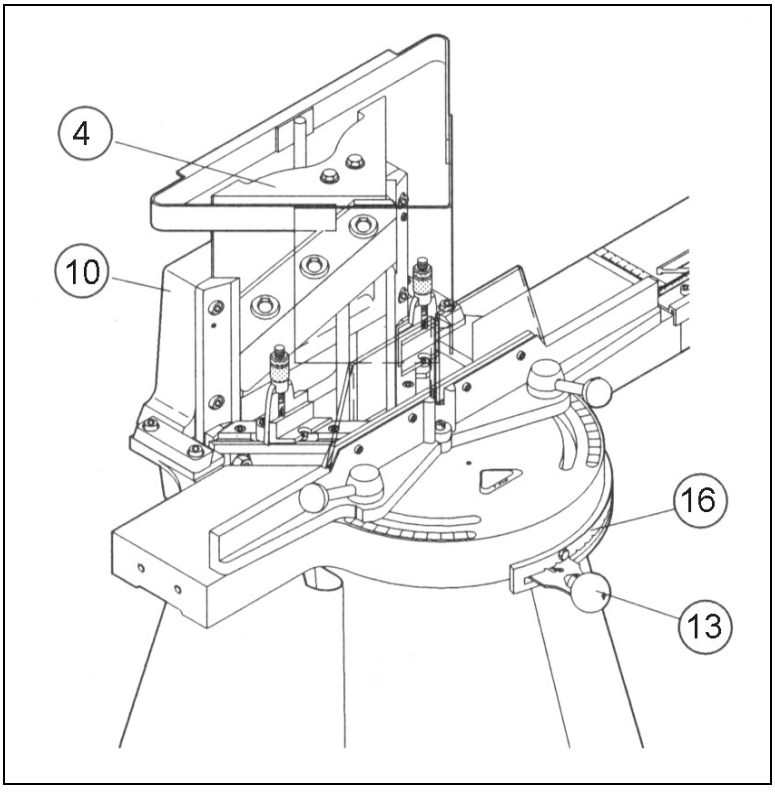

E-5-2

dan-list A/S
MASKINFABRIK
Haraldsvej 21 - DK-8960 Randers - Denmark
Tel.: +45 8643 5155 - Fax: +45 8643 5100
e-mail: danlist@danlist.dk
www.danlist.dk - www.danlistvideos.com

Adjustment of Rebate Supports (Fig. E-5-1)

The knife block must be in the topmost position during the adjustment.

The rebate supports are only used when cutting mouldings with rebates.

To adjust the rebate supports knurled lock-nut (32) is loosened.

Place the moulding to be cut in the machine. Push the rebate supports (31) into the rebate of the moulding.

Press the moulding down on the machine table.

The height of the rebate supports is adjusted by means of the knurled nut (33). The rebate supports must be adjusted so that they are approx. 0.5 mm under the rebate of the moulding

After the adjustment the knurled lock-nut (32) is tightened.

The rebate supports can only be removed from the machine when the knife block is in the rearmost position.

Adjustment of the Forward Movement (Fig. E-5-2)

The slide frame (10) and the knife block (4) are moved forward to a suitable starting position on the moulding to be cut (depending on the hardness of the wood) in the following way:

The lever (13) is pressed down so that it does not touch the teeth of the tooth arc (16) (to avoid wear of the teeth) and moved to the right to the position required, but no further than the second to last tooth. The last tooth is for the trim-cut only.

The teeth of the tooth arc (16) have the same travel, apart from the last tooth which has half travel for the trim cut which must always be used to ensure that a perfectly smooth finish is obtained.



Beware of the extremely sharp knives

dan-list A/S
MASKINFABRIK
Haraldsvej 21 - DK-8960 Randers - Denmark
Tel.: +45 8643 5155 - Fax: +45 8643 5100
e-mail: danlist@danlist.dk
www.danlist.dk - www.danlistvideos.com

Adjustment of Height Stop

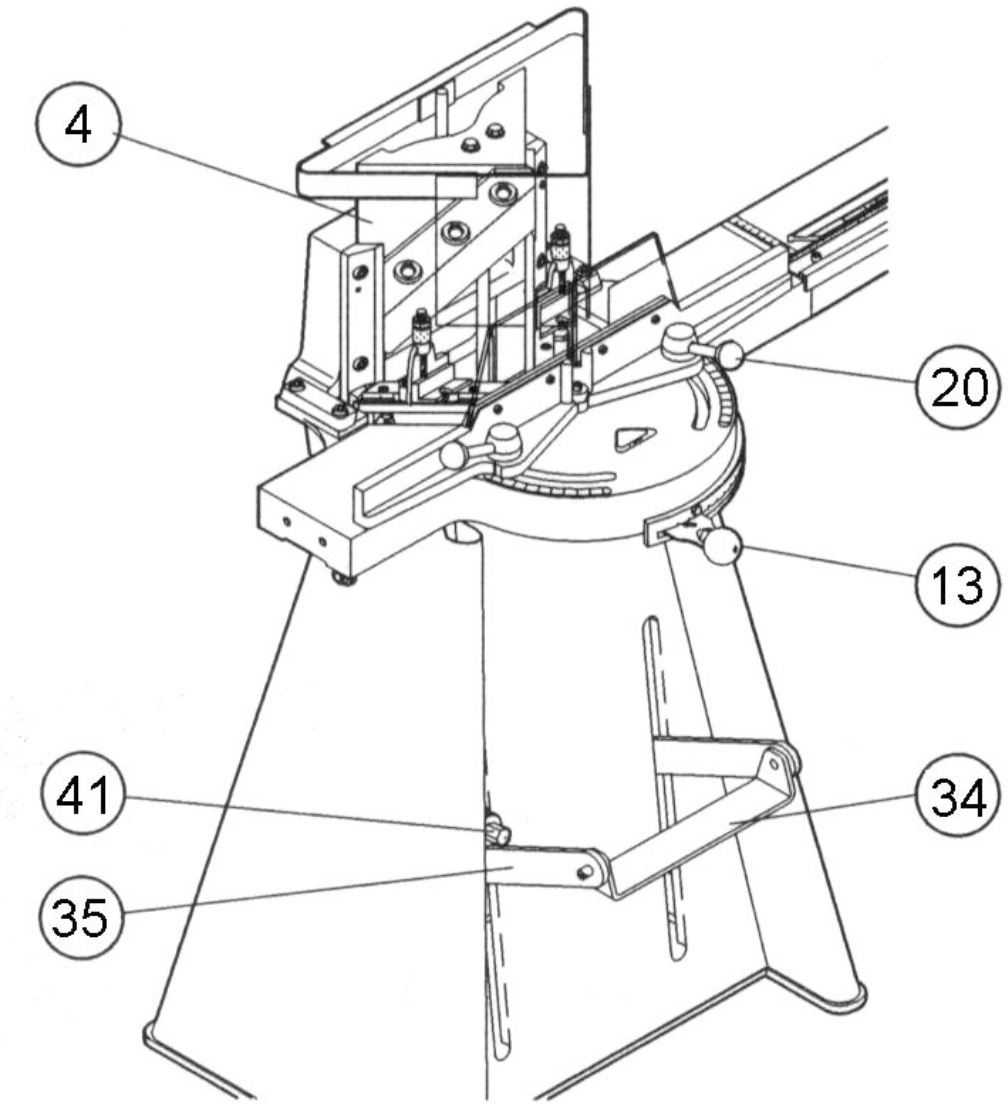

E-6

dan-list A/S
MASKINFABRIK
Haraldsvej 21 - DK-8960 Randers - Denmark
Tel.: +45 8643 5155 - Fax: +45 8643 5100
e-mail: danlist@danlist.dk
www.danlist.dk - www.danlistvideos.com

Adjustment of Height Stop

The height stop (41) is used for adjustment of the knife block (4) to a suitable height comparable with the moulding to be cut.

This avoids unnecessarily high foot movements.

The moulding is placed on the table (the knife block must be in the rearmost position, as shown on the picture). The knife block (4) is moved forward to the front position by means of lever (13)……(don't wear the teeth).

With the foot pedal (34) the knife block (4) is moved down to the height required, min. 20 mm short of the moulding.

The height stop (41) is loosened with handle (20), which acts as a spanner and can be removed from the fence. Fasten the height stop against the foot pedal tipper (35).

The height stop (41) is also used as a safety feature for locking the knife block in the bottom position when the machine is not used. Recommended safety procedure.



Beware of the extremely sharp knives

dan-list A/S
MASKINFABRIK
Haraldsvej 21 - DK-8960 Randers - Denmark
Tel.: +45 8643 5155 - Fax: +45 8643 5100
e-mail: danlist@danlist.dk
www.danlist.dk - www.danlistvideos.com

Working Procedure

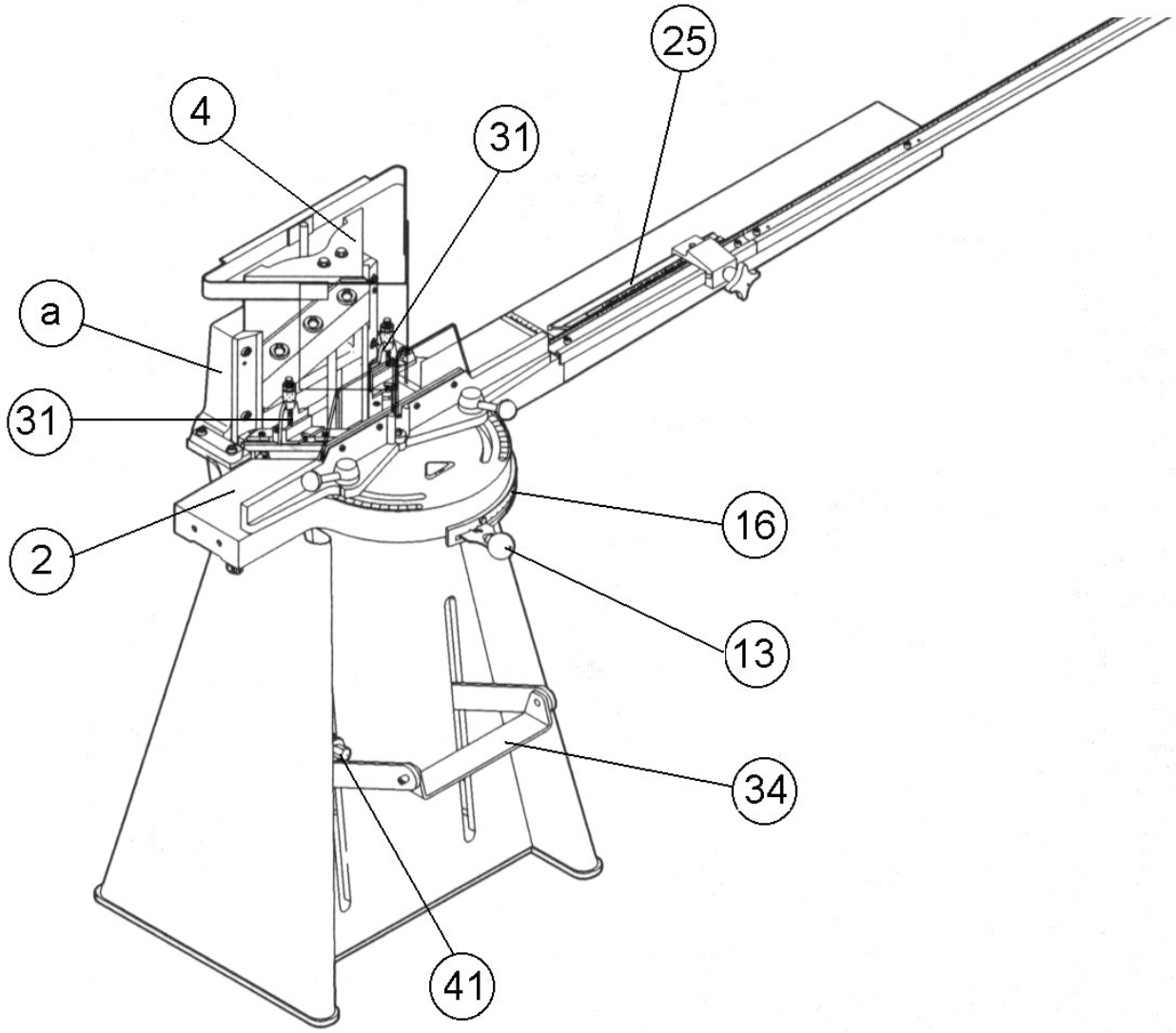

E-7

dan-list A/S
MASKINFABRIK
Haraldsvej 21 - DK-8960 Randers - Denmark
Tel.: +45 8643 5155 - Fax: +45 8643 5100
e-mail: danlist@danlist.dk
www.danlist.dk - www.danlistvideos.com

Working Procedure

The right hand side of the moulding is trimmed to 45°.

Place the knife unit (a) must in the rearmost position and the knife block (4) in the topmost position.

Place the moulding on the machine table (2) and push it up to the adjusted stop beam (25) (see E-4).

Working with mouldings with a rebate the rebate supports (31) are adjusted as described under E-5.

With the lever (13) the knife unit (a) is moved to a suitable starting position on the moulding. E.g. working with a 60 mm wide moulding the knife unit (a) is moved about 40 mm forward.

The foot pedal (34) is pressed home, then the foot pressure is relieved so that the springs can return the knife block (4) back to start position.

The lever (13) is moved a couple of notches further to the right in the tooth arc (16) and the next cut is made.

Proceed in this manner until the moulding is cut through.

The last cut must always be a small cut (trim-cut). Even with small mouldings that could easily be cut in one cut you must make the last small cut in order to achieve a good result. The tooth arc (16) is constructed so that the last tooth only has half the travel compared to the other teeth.

After Working Procedure

Clean the machine.

Remove the waste.

Check the whole machine.

The knife block should be locked in the bottom position using the height stop, as a safety precaution (41).



Beware of the extremely sharp knives

dan-list A/S
MASKINFABRIK
Haraldsvej 21 - DK-8960 Randers - Denmark
Tel.: +45 8643 5155 - Fax: +45 8643 5100
e-mail: danlist@danlist.dk
www.danlist.dk - www.danlistvideos.com

Lubrication Instructions

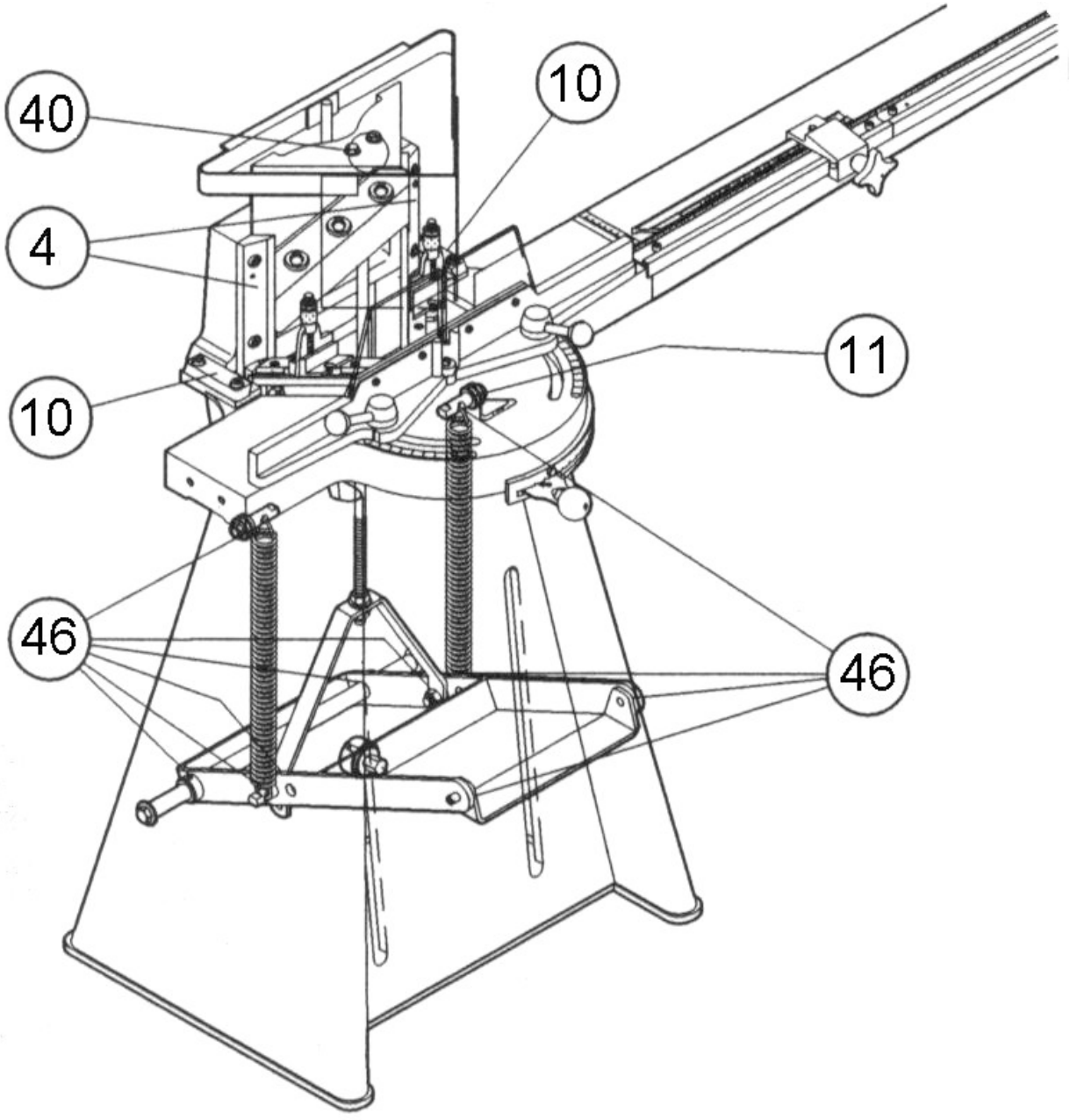

F-1

dan-list A/S
MASKINFABRIK
Haraldsvej 21 - DK-8960 Randers - Denmark
Tel.: +45 8643 5155 - Fax: +45 8643 5100
e-mail: danlist@danlist.dk
www.danlist.dk - www.danlistvideos.com

Lubrication Instructions

Approximately every two weeks lubricate:

The guides for

1. Knife block (4)
2. Slide Frame (10)
3. Cross (11) (lubricates simultaneously the forward movement of the knife block).
4. Linkage for the draw bar (40) of the knife block.
5. All the linkages in the lever system (46), incl. spring suspension.

Lubricant: Any acid-free oil.

Cleaning

MORSØ-F must be cleaned thoroughly after use.

Remove any waste wood from all the guides. (a ½" paint brush is ideal for this)

Remove the waste from the rebate support guides.

Remove the waste wood from behind the machine.

Resin from the mouldings can sometimes cause the knife blades to drag on the upward action of the knife block. To remove this resin, use WD 40, sprayed onto a cloth made in the shape of a ball (so that your fingers never go near the knives). Wipe in a downward action only so that neither the cloth nor your fingers can come into contact with the cutting edge of the knives.



Beware of the extremely sharp knives

dan-list A/S
MASKINFABRIK
Haraldsvej 21 - DK-8960 Randers - Denmark
Tel.: +45 8643 5155 - Fax: +45 8643 5100
e-mail: danlist@danlist.dk
www.danlist.dk - www.danlistvideos.com

Changing Knives

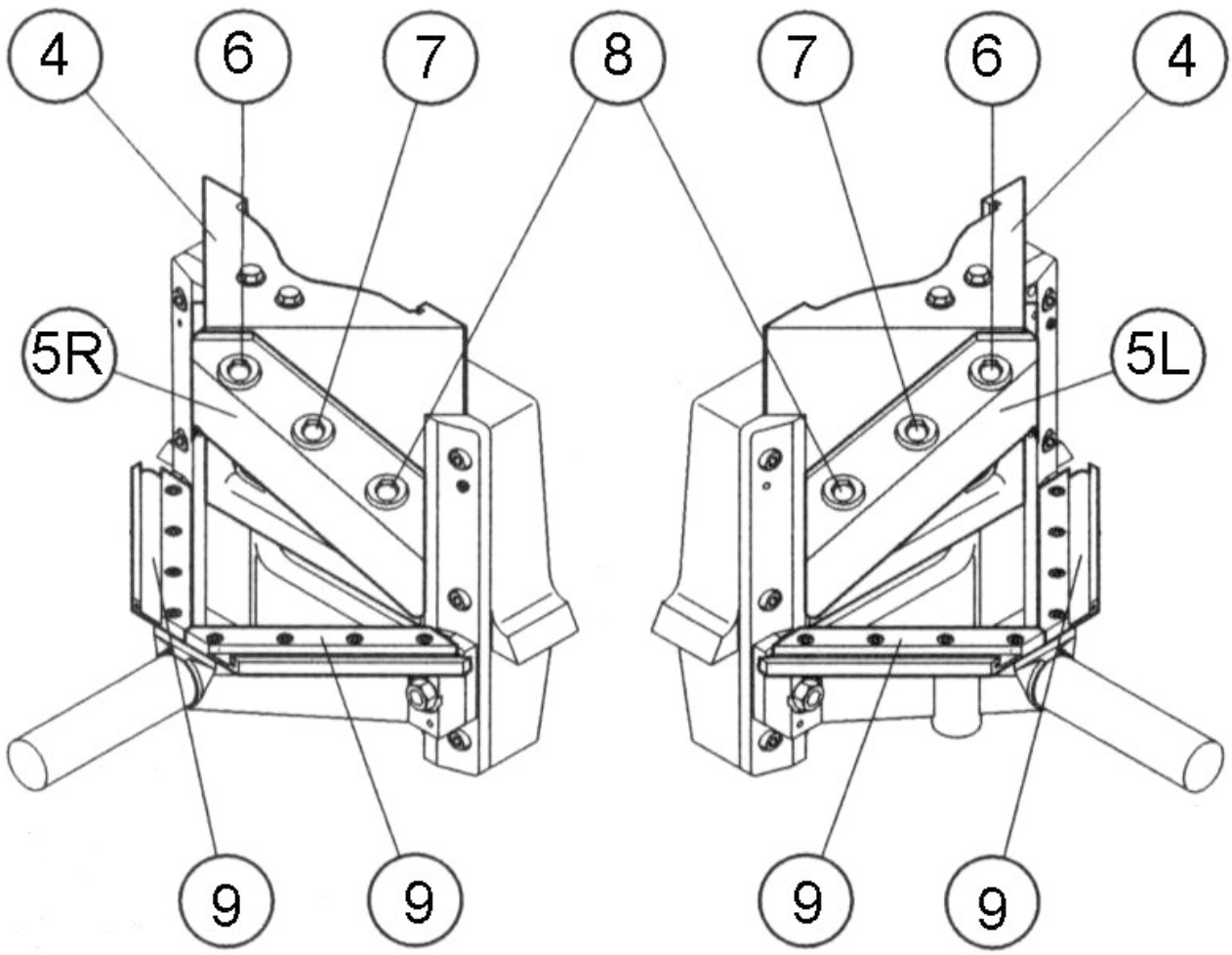

F-2

dan-list A/S
MASKINFABRIK
Haraldsvej 21 - DK-8960 Randers - Denmark
Tel.: +45 8643 5155 - Fax: +45 8643 5100
e-mail: danlist@danlist.dk
www.danlist.dk - www.danlistvideos.com

Changing Knives

When the cutting is no longer satisfactory, e.g. unclean cut surfaces with grooves, the knives must be changed or sharpened.

Precautions recommended:
Place a block of wood 2 mm below the knives so they cannot drop.
TESA type tape can be used to cover the cutting edge of the knives to safeguard both the blades and your fingers during removal and refitting.

1. Bolts (6), (7) + (8) are loosened with spanner (17mm.).
2. Remove bolts (6) + (8).
3. Remove bolt (7) from knife (5L) while pressing the knife against the knife block (4) with you hand so that the knife does not fall down.
4. Remove the knife.
   TAKE CARE OF YOUR FINGERS.
5. The same procedure is adopted with the opposite knife (5R).
6. Clean the surfaces of the knife block (4) and the new knives very carefully as even the smallest impurity between knife and knife block (4) will cause the knives to impinge too hard against the bottom knives (9).
7. Both new knives (5L) + (5R) are fitted on the knife block (4) with the bolts (6) + (8). Do not tighten the bolts.
8. The knives are pressed together at the front point. The knives must meet precisely at the front point and neither front edge must be further ahead than the other.
9. Check if the cutting edges of the knives are exactly the same height. If not, the knives can be adjusted up or down separately until the correct position is reached.
10. Tighten the bolts (6) (in both knives).
11. Insert the bolts (7) and tighten them.
12. Tighten bolts (8).
13. Press the foot pedal down very slowly and gently, to check that the new knives do not bind against the bottom knives.
14. Make a trial cut.
15. If in the slightest doubt about this repair, then call a qualified engineer.



Beware of the extremely sharp knives

dan-list A/S
MASKINFABRIK
Haraldsvej 21 - DK-8960 Randers - Denmark
Tel.: +45 8643 5155 - Fax: +45 8643 5100
e-mail: danlist@danlist.dk
www.danlist.dk - www.danlistvideos.com

Grinding of Knives

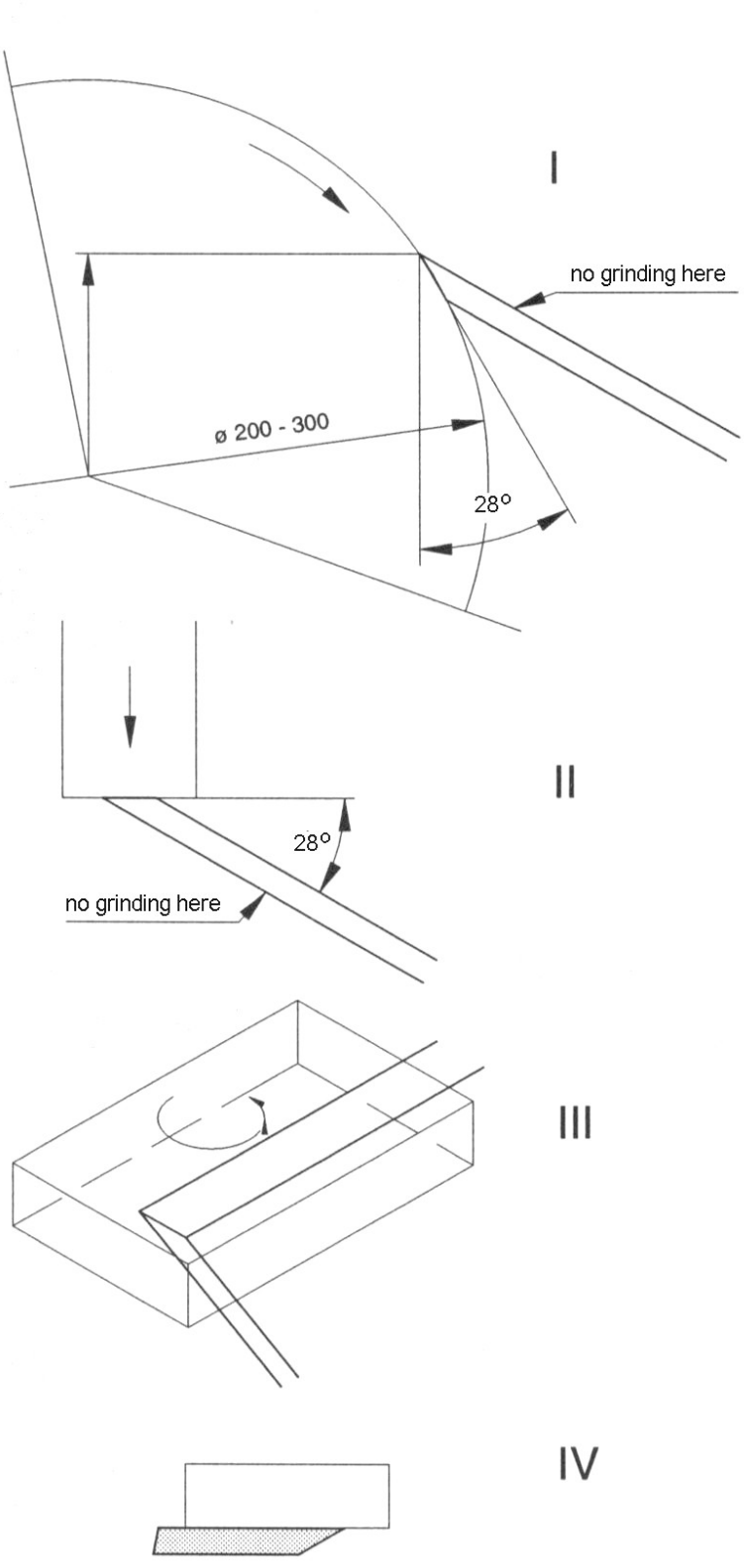

F-3

dan-list A/S
MASKINFABRIK
Haraldsvej 21 - DK-8960 Randers - Denmark
Tel.: +45 8643 5155 - Fax: +45 8643 5100
e-mail: danlist@danlist.dk
www.danlist.dk - www.danlistvideos.com

Grinding of Knives

When grinding the knives you must **only** grind on the reverse of the cutting edge. You must under **no circumstances** grind on the front or ends of the knives, because the knives will then be destroyed. The angle of the cutting edge compared to the front of the knife must be 28°.

Hollow grinding (recommended), figure I.
Using a grinding wheel the diameter must be between 200 - 300 mm. Using a cup wheel the diameter must be 150 mm.

Surface grinding figure II

Honing figure III

By setting the cutting edge you must use a soft fine-grained silicon carbide hand flat stone that must be kept soaked in oil or kerosene.
By setting the cutting edge you must under **no circumstances** sharpen lengthwise of the cutting edge, always crosswise.
First sharpen on the reverse side of the knife. The flat stone is to be kept in an angle of 29° compared to the front of the knife.

Take off burrs, figure IV
After the honing the burrs on the front of the knife are taken off with a slate flat stone that must be quite straight.
The flat stone must here be completely in line with the knife, because otherwise the outer cutting edge will get an incorrect angle.
Even the slightest error here will cause the knife to press too hard against the wood during the cutting, causing damage or bruising to the moulding.

Please also see page F-4: Regulation of Draw Bar



Beware of the extremely sharp knives

dan-list A/S
MASKINFABRIK
Haraldsvej 21 - DK-8960 Randers - Denmark
Tel.: +45 8643 5155 - Fax: +45 8643 5100
e-mail: danlist@danlist.dk
www.danlist.dk - www.danlistvideos.com

Regulation of Draw Bar / Adjustment of Forward Movement

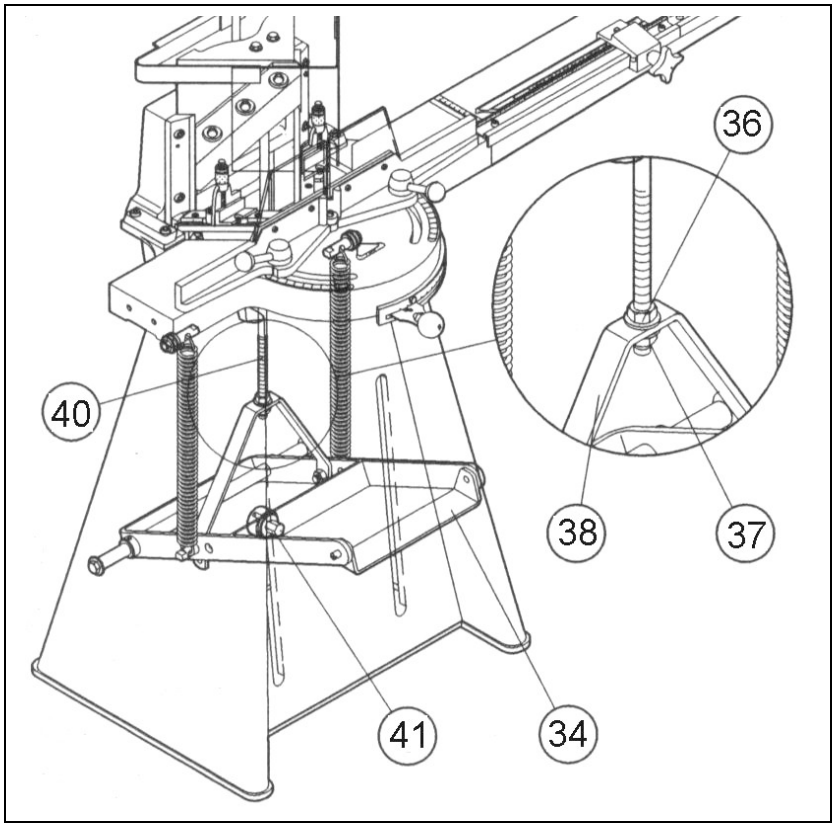

F-4-1

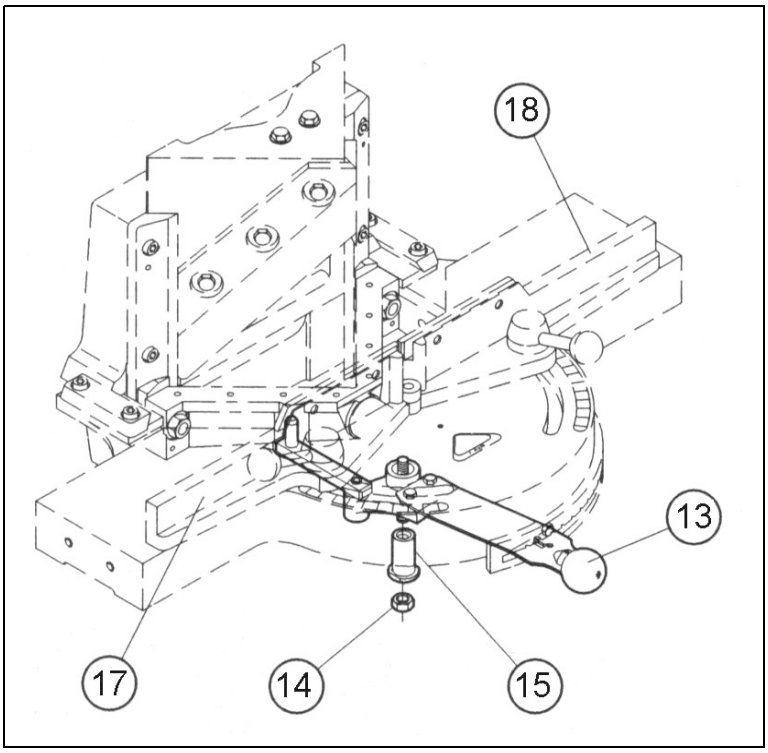

F-4-2

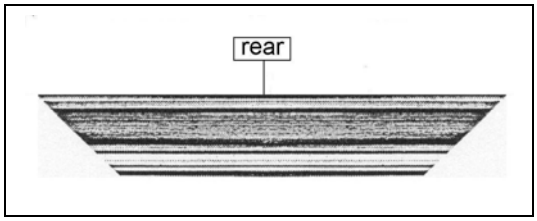

F-4-3

dan-list A/S
MASKINFABRIK
Haraldsvej 21 - DK-8960 Randers - Denmark
Tel.: +45 8643 5155 - Fax: +45 8643 5100
e-mail: danlist@danlist.dk
www.danlist.dk - www.danlistvideos.com

Regulation of Draw Bar (Fig. F-4-1)

As the knives become worn it will be necessary to adjust the height of the draw bar (40).

The following procedure is adopted:

1. The foot pedal (34) is pressed down and locked by means of the height stop lock (41).
2. Loosen lock-nut (36).
3. The nut (37) is screwed upwards so that the edges of the knives go about 4 - 6 mm below the upper side of the bottom knives.
4. Fasten lock-nut (36) against the draw bow (38).

Adjustment of Forward Travel (Fig. F-4-2)

When you have replaced the knives it might be necessary to adjust the forward travel to ensure that the rear of the moulding is cut through (picture F-4-3).

1. The knife block unit is placed in the front most position with lever (13) (in the picture it is shown in the rear position).
   The fences (17) + (18) must be adjusted on standard (45°) position and be fastened.
2. Loosen lock-nut (14).
3. The offset bush (15) is turned with a spanner until the front point of the knives travels a little bit beyond the fences (17) + (18), **but the knives must not touch the fences**.
4. Fasten nut (14) **while holding the offset bush (15) in the adjusted position by means of a spanner.**

Moving the knife block down slowly check the position of the knives. If the fences (17) + (18) are not touched, put a moulding in the machine and cut it. If the moulding does not split on the foremost edge (i.e. the rear of the moulding) the adjustment is correct.



Beware of the extremely sharp knives

dan-list A/S
MASKINFABRIK
Haraldsvej 21 - DK-8960 Randers - Denmark
Tel.: +45 8643 5155 - Fax: +45 8643 5100
e-mail: danlist@danlist.dk
www.danlist.dk - www.danlistvideos.com

Adjustment of the Return Springs

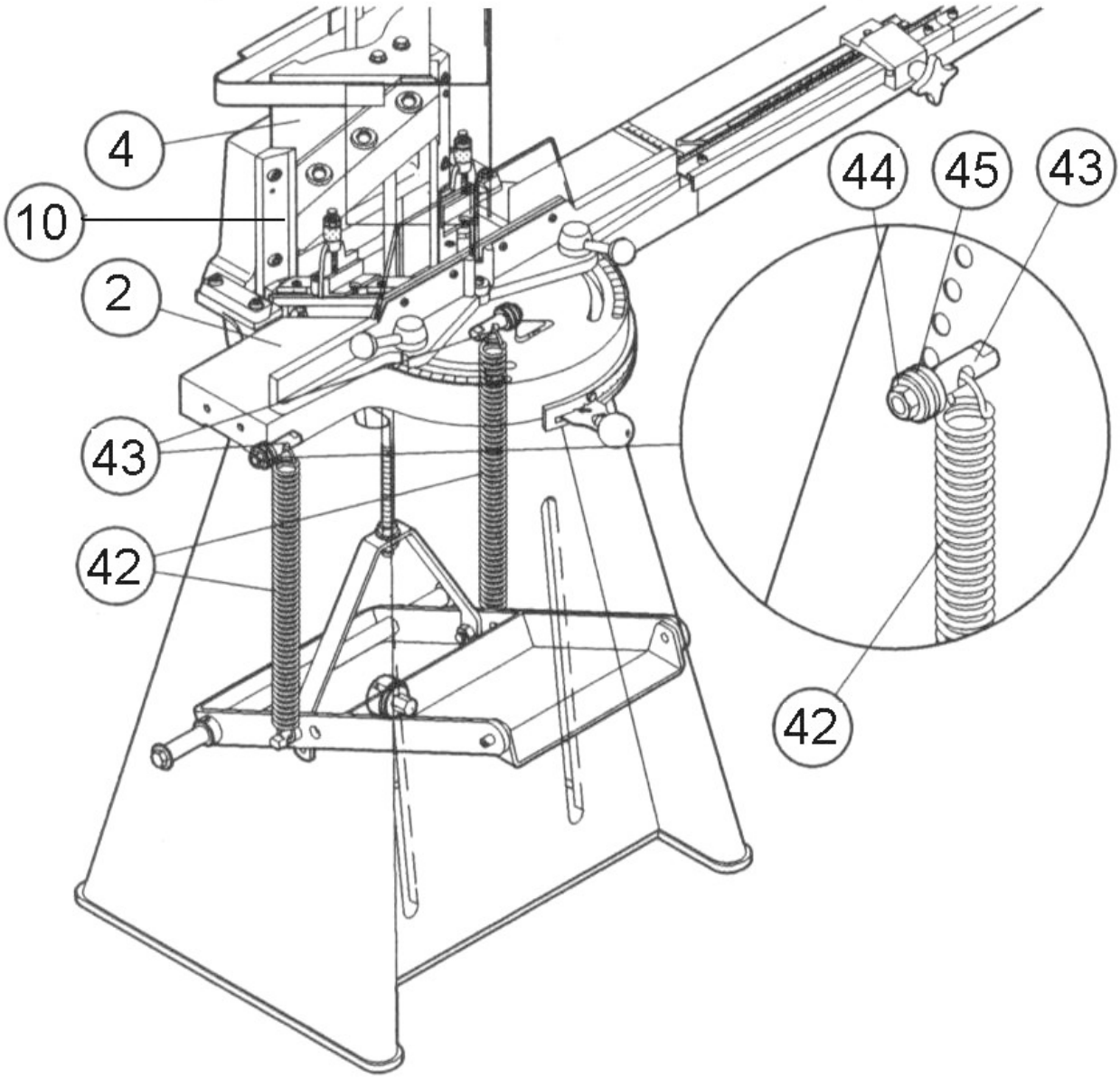

F-5

dan-list A/S
MASKINFABRIK
Haraldsvej 21 - DK-8960 Randers - Denmark
Tel.: +45 8643 5155 - Fax: +45 8643 5100
e-mail: danlist@danlist.dk
www.danlist.dk - www.danlistvideos.com

Adjustment of the Return Springs

The return springs (42) which return the knife block (4) to the topmost position are attached to the spring anchors (43) located in the bottom holes in the sides of the main frame.

If the return action is not quick enough or if the springs loose some of their tension after a while, the spring anchors (43) can be relocated up to the next hole in the frame.
(N.B. Do not confuse this effect with the lack of lubrication of the vertical knife block slides (10).)

1. A piece of wood should be placed under the knives on the table (2) in order to keep the knife block (4) in the up position.

2. Loosen nut (44)
   Only on the side which you are adjusting.

3. Remove the outer washer (45).

4. By means of a suitable tool the spring (42) is stretched upwards so that the spring anchor (43) can be moved to the next hole.

5. Replace the washer (45) and nut (44) and tighten.

6. Adopt the same procedure on the other side.



Beware of the extremely sharp knives

dan-list A/S
MASKINFABRIK
Haraldsvej 21 - DK-8960 Randers - Denmark
Tel.: +45 8643 5155 - Fax: +45 8643 5100
e-mail: danlist@danlist.dk
www.danlist.dk - www.danlistvideos.com

Adjustment of Height Movement

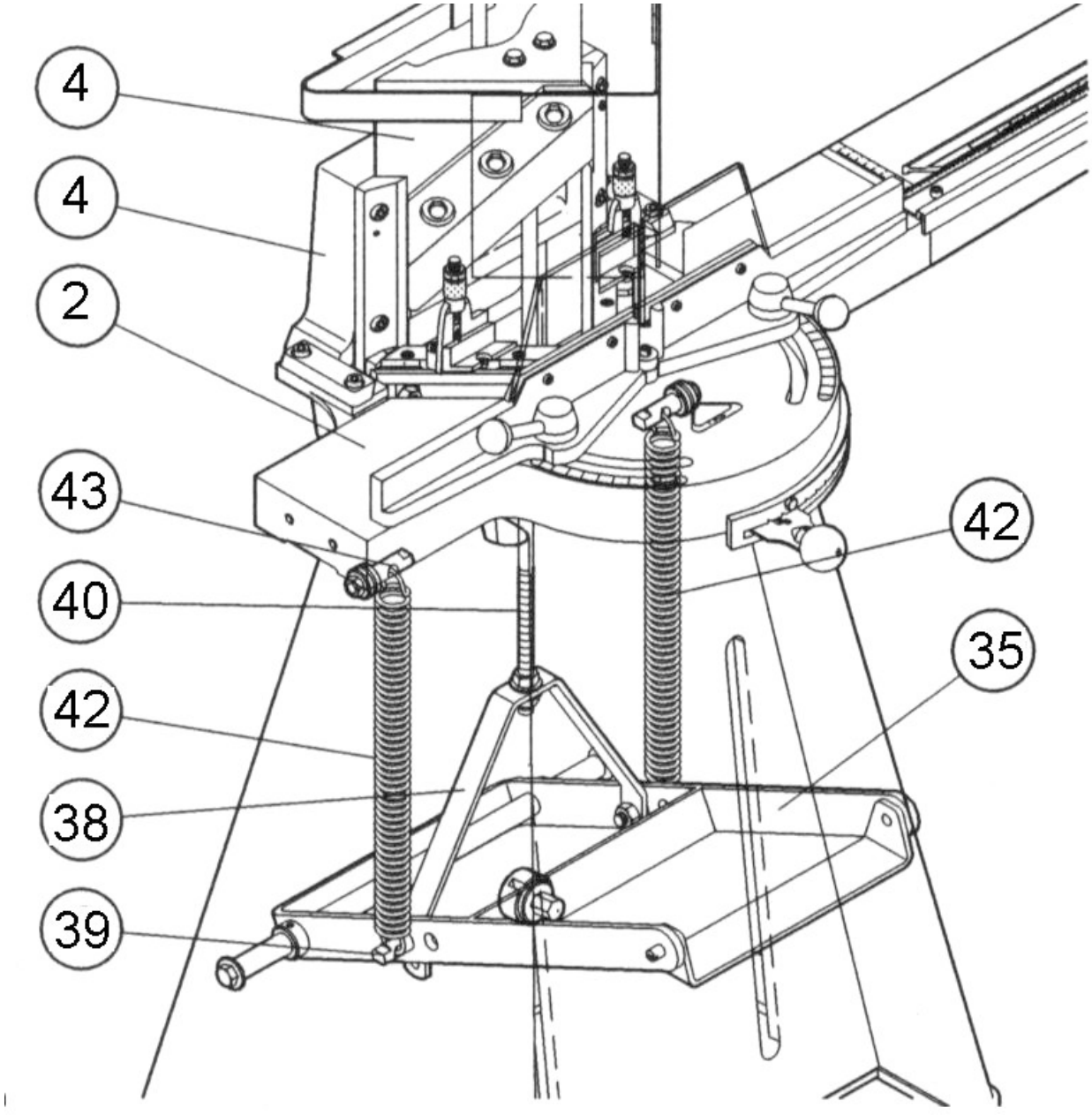

F-6

dan-list A/S
MASKINFABRIK
Haraldsvej 21 - DK-8960 Randers - Denmark
Tel.: +45 8643 5155 - Fax: +45 8643 5100
e-mail: danlist@danlist.dk
www.danlist.dk - www.danlistvideos.com

Adjustment of Height Movement

The height movement of the knife block (4) is adjusted to 145 mm at the factory.

In the following manner the machine can be adjusted to a height movement of max. 185 mm:

1. The knife block unit (4) is placed in the rearmost position.
2. A piece of wood is put on the table (2) under the knives in order to prevent the knife block (4) falling down during the adjustment.
3. The springs (42) are removed from the spring anchors (43) and draw bow holders (39).
4. The draw bow holders (39) which are located in the rearmost holes in the foot pedal tipper (35) are relocated to the foremost holes in the foot pedal tipper (35).
5. Fasten the draw bow holders (39) in the draw bow (38) again.
6. Place the springs (42) in the spring anchors (43) and the draw bow holders (39).
7. The draw bar (40) is adjusted as described under F-4.



Beware of the extremly sharp knives

dan-list A/S
MASKINFABRIK
Haraldsvej 21 - DK-8960 Randers - Denmark
Tel.: +45 8643 5155 - Fax: +45 8643 5100
e-mail: danlist@danlist.dk
www.danlist.dk - www.danlistvideos.com

Changing of Spare Parts

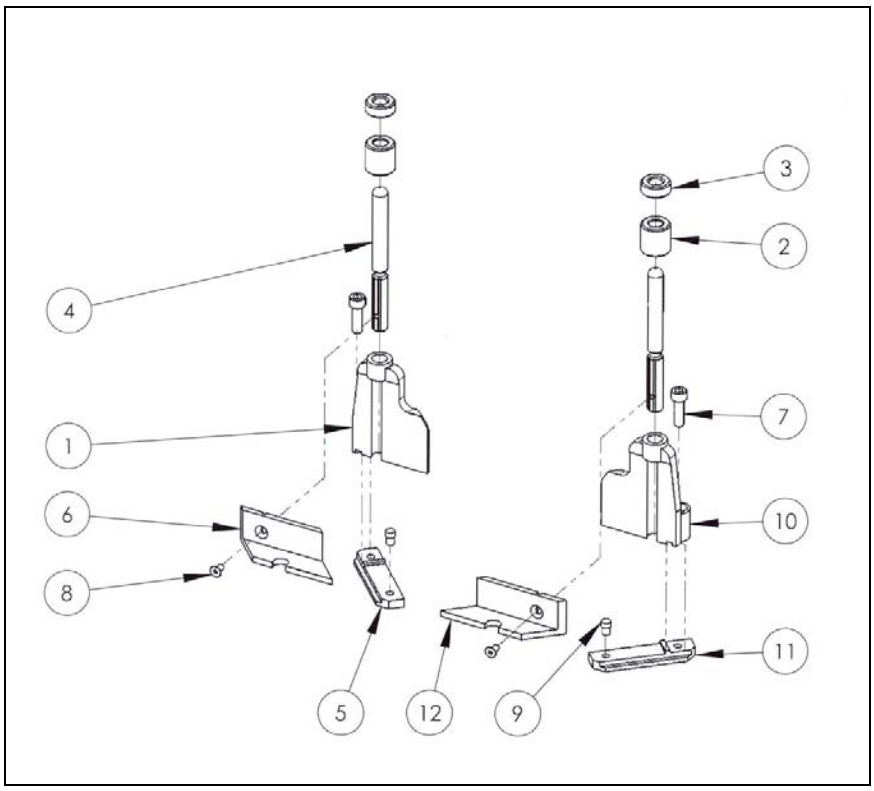

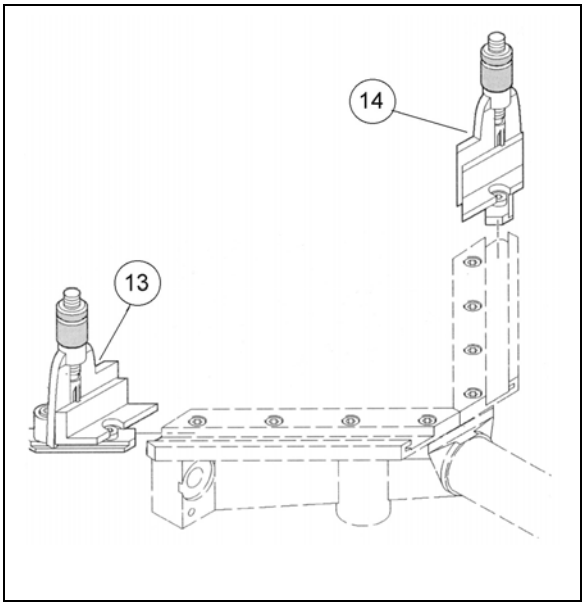

F-7

dan-list A/S
MASKINFABRIK
Haraldsvej 21 - DK-8960 Randers - Denmark
Tel.: +45 8643 5155 - Fax: +45 8643 5100
e-mail: danlist@danlist.dk
www.danlist.dk - www.danlistvideos.com

Changing of Spare Parts

If it is necessary to change worn out or damaged parts we recommend that you proceed in the following manner:

1. The index of the spare parts list (see page I-1) refers to which specific list the spare part can be located.

2. The list in question is then used when ordering spare parts, as there are part numbers, disassembly and assembly diagrams of the part in question.

3. Example:
   Parts in the rebate support must be renewed:
   Figure I-1 shows that the parts are located in figure I-6. Under index. 1, 2, and 4, the parts necessary for the replacement, the disassembly and assembly procedure is illustrated.
   In the text part of the illustration the order, number and spare part designator are stated.

   If in doubt, you should call a qualified engineer.



Beware of the extremly sharp knives

dan-list A/S
MASKINFABRIK
Haraldsvej 21 - DK-8960 Randers - Denmark
Tel.: +45 8643 5155 - Fax: +45 8643 5100
e-mail: danlist@danlist.dk
www.danlist.dk - www.danlistvideos.com

Faults	Cause	Repair
Incorrect cuttings	Blunt knives	Replace knives / Resharpen See page F-2
	Knives incorrectly installed	Check the installation See page F-2
Moulding with rebate burrs	Rebate supports incorrectly adjusted	Correct the adjustment See page E-5
The moulding is not firm on the table during cutting	Fences loose	Fasten fences See page E-3
Incorrect length measurements	The length measure incorrectly set	Correct the length measure See page E-4
	Stop beam loose	Fasten stop beam
The basic position of the knife block is changed	The height stop is displaced	Correct the adjustment see page E-7
The moulding is not cut quite through	The forward movement is not correct adjusted	Correct the adjustment see page F-4

Safety Devices

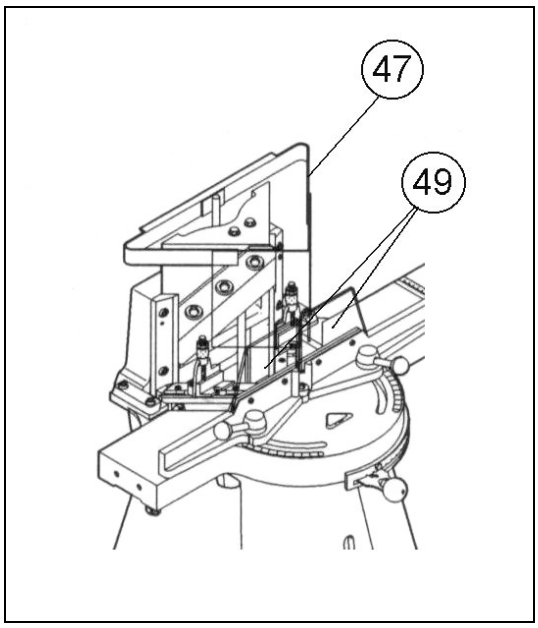

CE

I M P O R T A N T

According to current safety regulations **MORSØ-F** must not be used without the following safety devices:

1. Safety Guard (47) for knife block

2. Safety Guards (49) in the fences

Safety Regulations

On delivery of the machine to the consumer

dan-list A/S MASKINFABRIK
Haraldsvej 21 - DK-8960 Randers - Denmark
Tel.: +45 8643 5155 - Fax: +45 8643 5100
e-mail: danlist@danlist.dk
www.danlist.dk - www.danlistvideos.com

guarantees that MORSØ-F mitring machine complies with the CEN/TC 142 (Safety Regulations for wood working machinery).

Before using the mitring machine MORSØ-F, the operator must be familiar with current national and international safety regulations.

If the operator does not comply with the above mentioned regulations the factory is not liable for damages to either the machine or the operator.

dan-list A/S
MASKINFABRIK
Haraldsvej 21 - DK-8960 Randers - Denmark
Tel.: +45 8643 5155 - Fax: +45 8643 5100
e-mail: danlist@danlist.dk
www.danlist.dk - www.danlistvideos.com

NOTES

dan-list A/S
MASKINFABRIK
Haraldsvej 21 - DK-8960 Randers - Denmark
Tel.: +45 8643 5155 - Fax: +45 8643 5100
e-mail: danlist@danlist.dk
www.danlist.dk - www.danlistvideos.com

Oversigt - Index – Übersicht

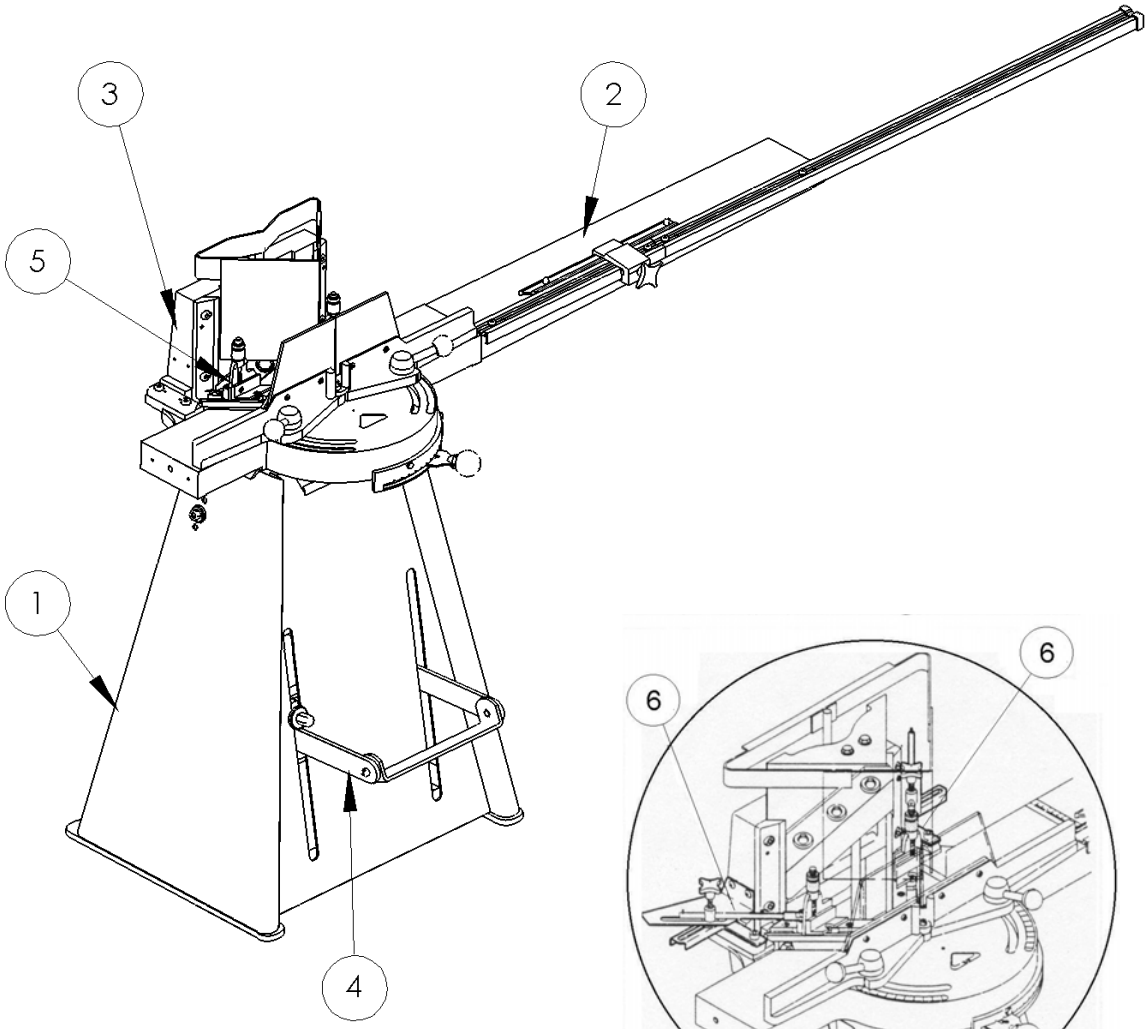

Pos.	Betegnelse	Designation	Bezeichnung	Side/Page/Seite
1	Grundmaskine	Basic Machine	Grundmaschine	I-2
2	Bord, komplet	Table, complete	Tisch, komplett	!-3
3	Knivhovedenhed	Knife Block Unit	Messerkopf-Einheit	I-4
4	Drivmekanisme	Drive equipment	Antriebsmechanik	I-5
5	Falsstøtter	Rebate Supports	Falzauflagen	I-6
	Ekstraudstyr	Accessories	Zusatzausrüstung	
6	Falsstøtter, autom.	Rebate Support, autom.	Falzauflage, automatisch	L-2

dan-list A/S
MASKINFABRIK
Haraldsvej 21 - DK-8960 Randers - Denmark
Tel.: +45 8643 5155 - Fax: +45 8643 5100
e-mail: danlist@danlist.dk
www.danlist.dk - www.danlistvideos.com

Grundmaskine - Basic machine – Grundmaschine

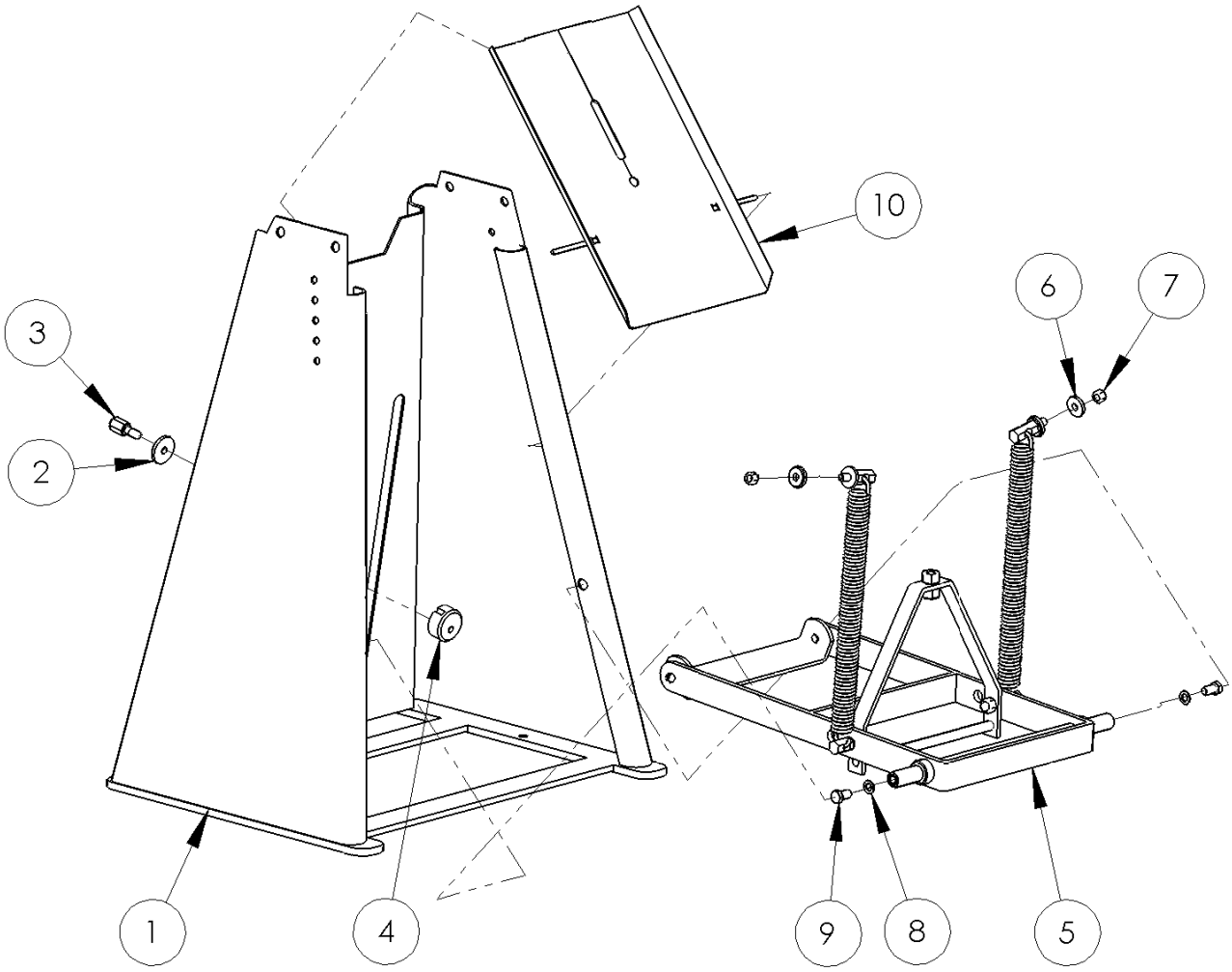

dan-list A/S
MASKINFABRIK
Haraldsvej 21 - DK-8960 Randers - Denmark
Tel.: +45 8643 5155 - Fax: +45 8643 5100
e-mail: danlist@danlist.dk
www.danlist.dk - www.danlistvideos.com

Grundmaskine - Basic Machine - Grundmaschine

Pos.	Art. No.	Betegnelse	Designation	Bezeichnung
1	30000326	Stativ	Frame	Gestell
2	80372224	Skive	Washer	Scheibe
3	80382223	Skrue	Screw	Schraube
4	01602222	Højdestop	Height stop	Höhenbegrenzung
5	99990217	Drivmekanisme, komplet	Drive equipment, complete	Antriebsmechanik, komplett
6	80281415	Skive	Washer	Scheibe
7	43007008	Møtrik	Hexagon nut	Sechskantmutter
8	40000010	Skive FZ	Washer	Scheibe
9	53010016	Stålbolt	Hexagon screw	Sechskantschraube
10	11050001	Slidske	Waste chute	Rutsche

dan-list A/S
MASKINFABRIK
Haraldsvej 21 - DK-8960 Randers - Denmark
Tel.: +45 8643 5155 - Fax: +45 8643 5100
e-mail: danlist@danlist.dk
www.danlist.dk - www.danlistvideos.com

Bord, komplet – Table, complete – Tisch, komplett

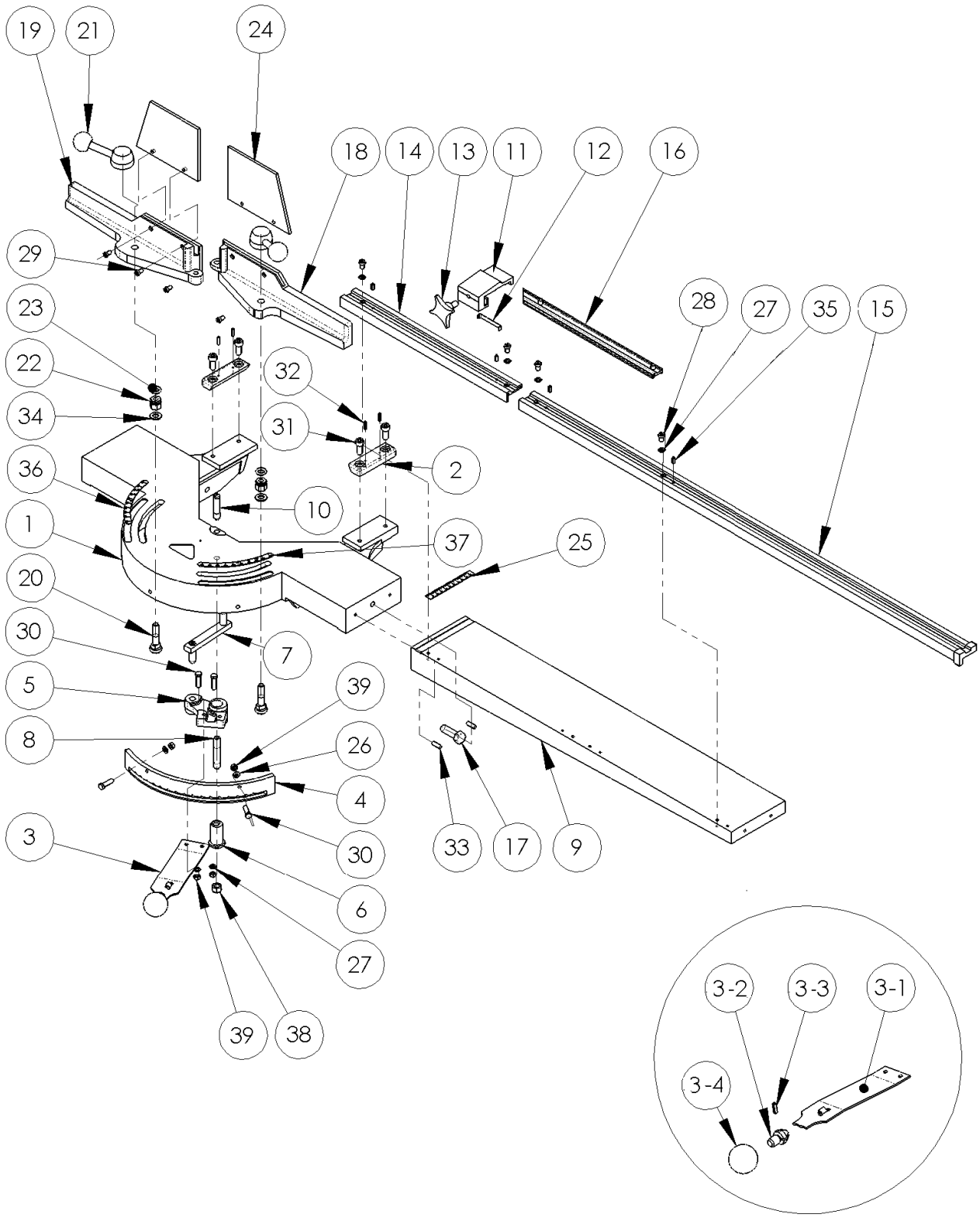

dan-list A/S
MASKINFABRIK
Haraldsvej 21 - DK-8960 Randers - Denmark
Tel.: +45 8643 5155 - Fax: +45 8643 5100
e-mail: danlist@danlist.dk
www.danlist.dk - www.danlistvideos.com

Bord komplet – Table, complete – Tisch, komplett

Pos	Art. Nr.	Betegnelse	Designation	Bezeichnung
1	20000120	Bord	Table	Tisch
2	20000064	Styreliste	Short Guide Rail	Steuerleiste
3	13504004	Håndtag, komplet	Hand Lever, complete	Stellhebel, komplett
3-1	10350035	Håndtag	Hand Lever	Handgriff
3-2	08394003	Kugleholder	Ball Holder	Kugelhalter
3-3	47002008	Spændestift	Clamping Pin	Spannstift
3-4	65304003	Kugle	Ball	Kugelknopf
4	19504005	Tandbue	Tooth Arc	Zahnbogen
5	20000407	Vinkelarm	Bell Crank Lever	Exzenterhebel
6	81110408	Bøsning	Bushing	Buchse
7	30000406	Trækstroppe	Tie Rod	Zughebel
8	81124001	Støttebolt	Pivot	Stützbolzen
9	20000061	Bordforlænger	Table extension	Tischverlängerung
10	30000177	Styretap	Steering Pivot	Steuerzapfen
11	60785009	Stopklods	Stop block	Endanschlag
12	67785007	Fjeder	Spring	Feder
13	60785008	Håndhjul	Star wheel	Sterngriff
14	74501012	Målskinne	Divided beam	Meβschiene
15	74801010	Målskinne	Divided beam	Meβschiene
16	74001011	Stopskinne	Stop beam	Anschlagschiene
17	55716015	Stålbolt	Hexagon screw	Sechskantschraube
18	20000170H	Anslagsliste	Fence	Anschlagleiste
19	20000170V	Anslagsliste	Fence	Anschlagleiste
20	80570071	Bolt	Bolt	Bolzen
21	30000172	Håndtag komplet	Handle (spanner), complete.	Handgriff komplett
22	80600073	Møtrik	Hexagon nut	Sechskantmutter
23	69131262	O-ring	O-ring	O-Ring
24	17600076	Plastikskærm	Safety guard	Unfallschutz
25	64610110	Målebånd 12x110 mm	Measuring Tape	Meβband
26	41000106	Fjederskive FZ	Spring Washer	Federscheibe
27	40000006	Skive FZ	Washer	Scheibe
28	50006010	Cylinderskrue LH	Socket Head Screw	Zylinderschraube
29	50005010	Cylinderskrue LH	Socket Head Screw	Zylinderschraube
30	53006025	Sætskrue FZ	Hexagon Bolt	Sechkantschraube
31	50008020	Cylnderskrue	Socket Head Screw	Zylinderschraube
32	47003016	Spændestift	Clamping Pin	Spannstift
33	48005020	Konisk Kærvstift	Notched pin	Kerbstift
34	40000010	Skive	Washer	Scheibe
35	47004012	Spændestift	Clamping Pin	Spannstift
36	64013160V	Målebånd	Measuring Tape	Meβband
37	64013160H	Målebånd	Measuring Tape	Meβband
38	43007008	Møtrik	Hexagon Nut	Sechskantmutter
39	43000006	Møtrik FZ	Hexagon Nut	Sechskantmutter

dan-list A/S
MASKINFABRIK
Haraldsvej 21 - DK-8960 Randers - Denmark
Tel.: +45 8643 5155 - Fax: +45 8643 5100
e-mail: danlist@danlist.dk
www.danlist.dk - www.danlistvideos.com

Knivhovedenhed - Knife Block Unit - Messerkopf-Einheit

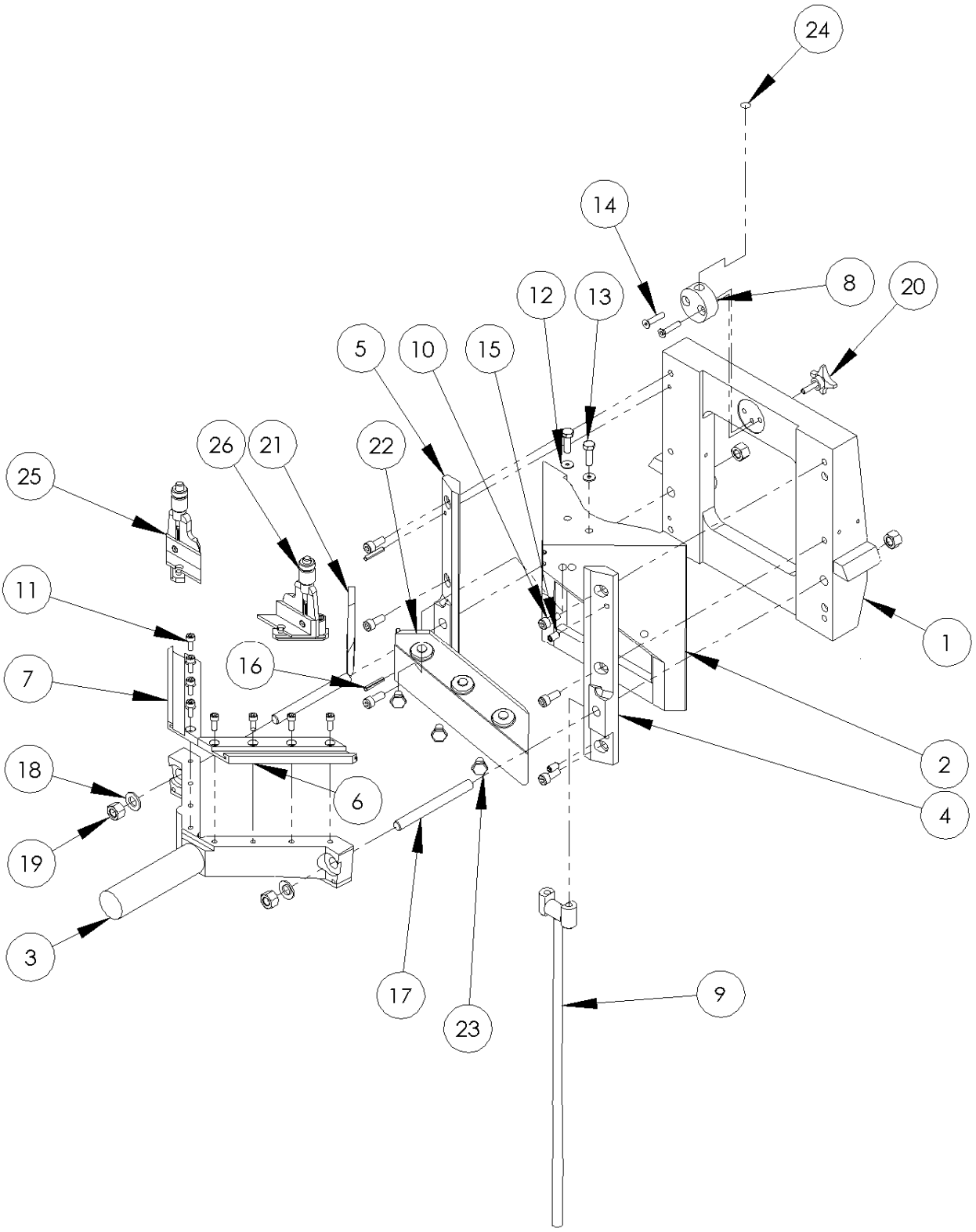

dan-list A/S
MASKINFABRIK
Haraldsvej 21 - DK-8960 Randers - Denmark
Tel.: +45 8643 5155 - Fax: +45 8643 5100
e-mail: danlist@danlist.dk
www.danlist.dk - www.danlistvideos.com

Knivhovedenhed - Knife Block Unit - Messerkopf-Einheit

Pos	Art. No.	Betegnelse	Designation	Bezeichnung
1	00000130	Slæderamme	Slide Frame	Schlittenrahmen
2	20000140	Knivhoved	Knife Block	Messerkopf
3	20000160	Kryds	Cross	Kreuzstück
4	26500050H	Styreliste	Long Guide Rail	Steuerleiste
5	26500050V	Styreliste	Long Guide Rail	Steuerleiste
6	14700302H	Underkniv	Bottom Knife	Untermesser
7	14700302V	Underkniv	Bottom Knife	Untermesser
8	17700077	Spændestykke	Clamping Device	Spannstück
9	01000101	Trækstang	Draw Bar	Verbindungsstange
10	50008020	Undersænket skrue	Countersunk Screw	Schraube, versenkt
11	50160304	Cylinderskrue	Cylinder Screw	Zylinderschraube
12	40000008	Skive FZ	Washer	Scheibe
13	53008025	Sætskrue FZ	Hexagon Screw	Sechkantschraube
14	49006025	Undersænkskrue	Countersunk Screw	Senkschraube
15	52008016	Spændestift	Clamping Pin	Spannstift
16	47005030	Spændestift	Clamping Pin	Spannstift
17	80820052	Pindbolt	Stud	Stiftschraube
18	41000216	Skive	Washer	Scheibe
19	43000012	Møtrik	Hexagon Nut	Sechskantmutter
20	60785007	Håndhjul	Star Wheel	Sterngriff
21	30000301V	Kniv	Knife	Messer
22	30000301H	Kniv	Knife	Messer
23	80870303	Skrue	Hexagon Screw	Sechskantschraube
24	17701078	Skærm, komplet	Safety Guard, complete	Schutzschirm, kompl.
25	01400345V	Falsstøtte, komplet	Rebate Support, compl.	Falzauflage, kompl.
26	01400345H	Falsstøtte, komplet	Rebate Support, compl.	Falzauflage, kompl.

dan-list A/S
MASKINFABRIK
Haraldsvej 21 - DK-8960 Randers - Denmark
Tel.: +45 8643 5155 - Fax: +45 8643 5100
e-mail: danlist@danlist.dk
www.danlist.dk - www.danlistvideos.com

Drivmekanisme - Drive Equipment - Antriebsmechanik

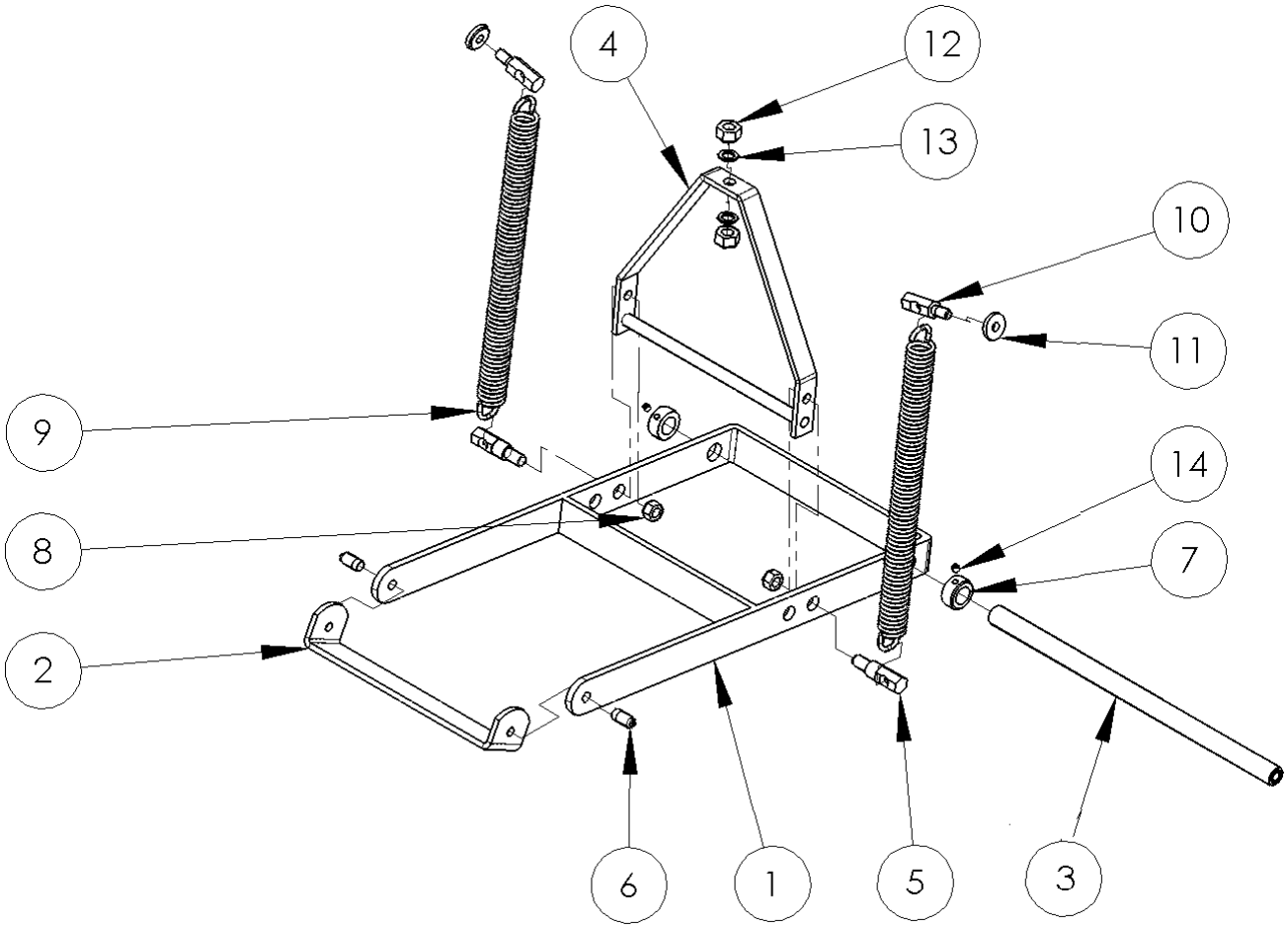

dan-list A/S
MASKINFABRIK
Haraldsvej 21 - DK-8960 Randers - Denmark
Tel.: +45 8643 5155 - Fax: +45 8643 5100
e-mail: danlist@danlist.dk
www.danlist.dk - www.danlistvideos.com

Drivmekanisme - Drive Equipment - Antriebsmechanik

Pos	Art. No.	Betegnelse	Designation	Bezeichnung
1	00000217	Fodvipper	Foot pedal tipper	Fußhebel
2	01000070	Pedal	Pedal	Pedal
3	01102121	Aksel	Shaft	Achse
4	00000219	Trækbøjle komplet	Draw bow, complete	Zugbügel, komplett
5	80971915	Trækbøjleholder	Draw bow holder	Zugbügelhalter
6	01101716	Tap	Pivot	Zapfenschraube
7	80022124	Stopring	Set collar	Stellring
8	43007016	Møtrik	Hexagon nut	Sechskantmutter
9	67600214	Trækfjeder	Extension spring	Zugfeder
10	80271420	Fjederholder	Spring holder	Federhalter
11	80281415	Skive	Washer	Scheibe
12	43007020	Møtrik	Hexagon nut	Sechskantmutter
13	40000012	Skive	Washer	Scheibe
14	51006008	Pinolskrue	Grub screw	Gewindestift

dan-list A/S
MASKINFABRIK
Haraldsvej 21 - DK-8960 Randers - Denmark
Tel.: +45 8643 5155 - Fax: +45 8643 5100
e-mail: danlist@danlist.dk
www.danlist.dk - www.danlistvideos.com

Falsstøtter - Rebate Support - Falzauflagen

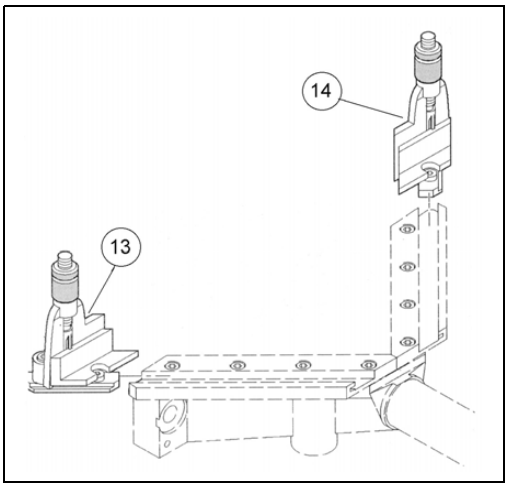

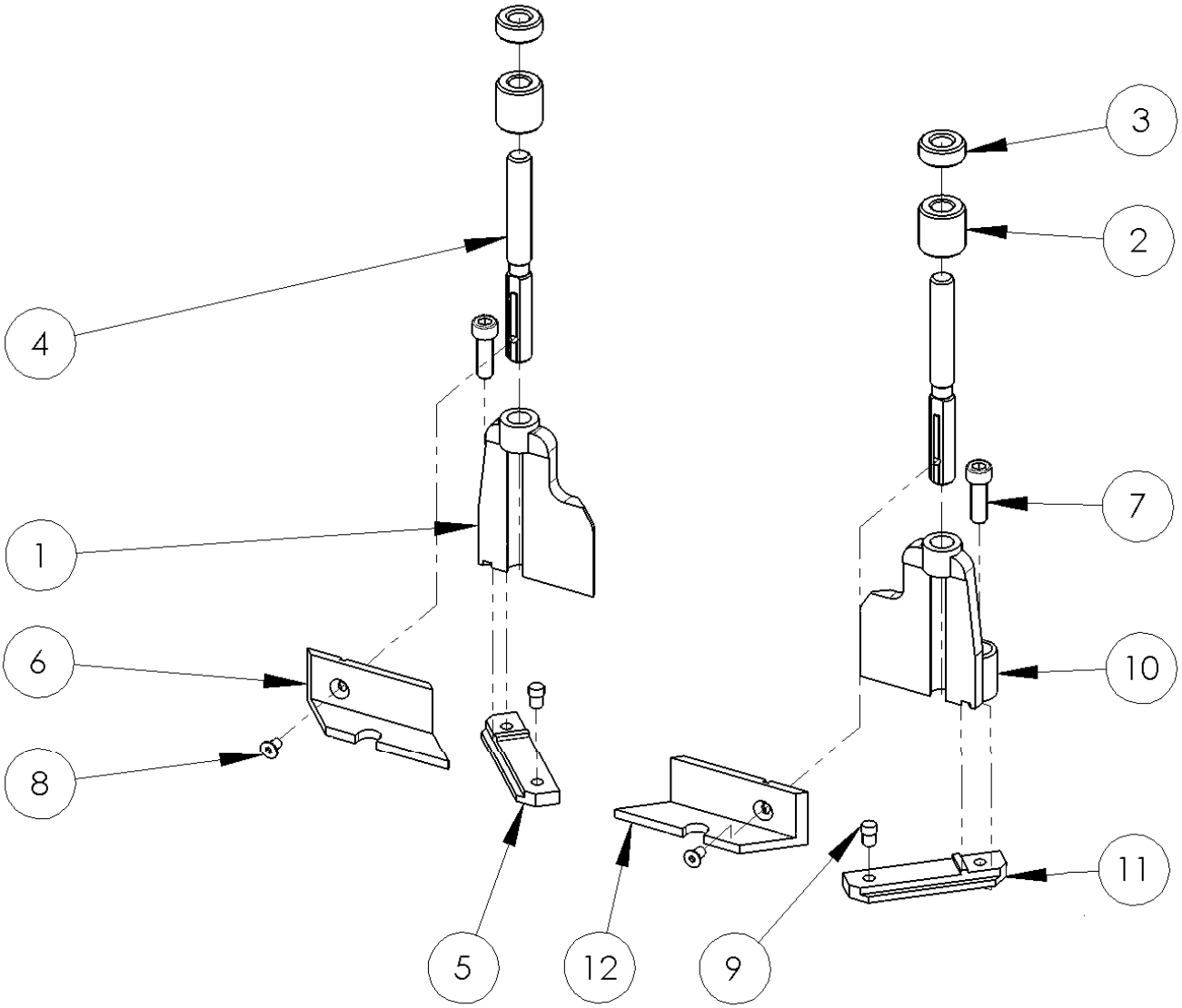

dan-list A/S
MASKINFABRIK
Haraldsvej 21 - DK-8960 Randers - Denmark
Tel.: +45 8643 5155 - Fax: +45 8643 5100
e-mail: danlist@danlist.dk
www.danlist.dk - www.danlistvideos.com

Falsstøtter - Rebate Support - Falzauflagen

Pos.	Art. No.	Betegnelse	Designation	Bezeichnung
1	21403403V	Holder	Holder	Halter
2	80233603	Rouletteret møtrik	Knurled Nut	Rändelmutter
3	80243703	Rouletteret møtrik	Knurled Lock-nut	Rändelmutter
4	12503903	Tap f. falsstøtte	Pin f. rebate support	Zapfen f. Falzauflagen
5	12203003V	Underpart	Bottom Part	Unterteil
6	12203203V	Vinkeljern	Angle Iron	Winkelstahl
7	50006020	Cylinderskrue	Cylinder Screw	Zylinderschraube
8	49004010	Undersænket skrue	Countersunk Screw	Schraube, versenkt
9	12300010	Tap	Pin	Zapfen
10	21403403H	Holder	Holder	Halter
11	12203003H	Underpart	Bottom Part	Unterteil
12	12203203H	Vinkeljern	Angle Iron	Winkelstahl
13	01400345V	Falsstøtte komplet	Rebate Support compl.	Falzauflage kompl.
14	01400345H	Falsstøtte komplet	Rebate Support compl.	Falzauflage kompl.

dan-list A/S
MASKINFABRIK
Haraldsvej 21 - DK-8960 Randers - Denmark
Tel.: +45 8643 5155 - Fax: +45 8643 5100
e-mail: danlist@danlist.dk
www.danlist.dk - www.danlistvideos.com

Automatic Rebate Support Attachment.

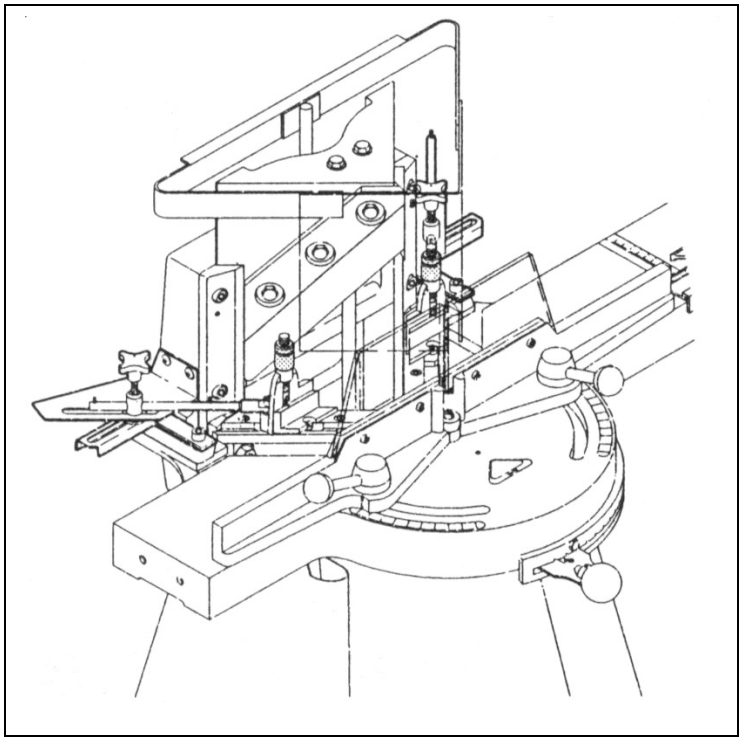

The automatic rebate support attachment is available as an accessory.

The automatic rebate support attachment is ideal for series production of frames.

With this accessory, the rebate supports automatically return to the adjusted width after each cutting cycle. Manual resetting is therefore eliminated.

The rebate supports are adjusted both to the width of the moulding and the height of the rebate.

During the cutting cycle when the knives are manually moved forward the rebate supports will automatically move in sequence.

When the cutting cycle is finished, and the knives are returned to the rearmost position, the automatic rebate supports also return in unison, ready to accept the next work piece.



Beware of the extremely sharp knives

dan-list A/S
MASKINFABRIK
Haraldsvej 21 - DK-8960 Randers - Denmark
Tel.: +45 8643 5155 - Fax: +45 8643 5100
e-mail: danlist@danlist.dk
www.danlist.dk - www.danlistvideos.com

Installation Instructions

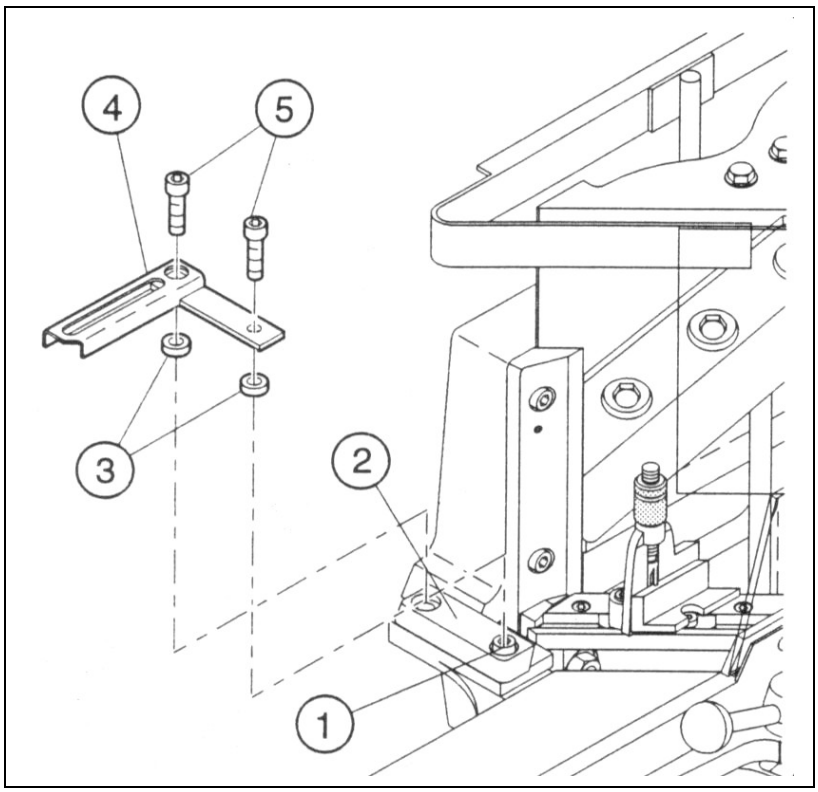

L-1-2

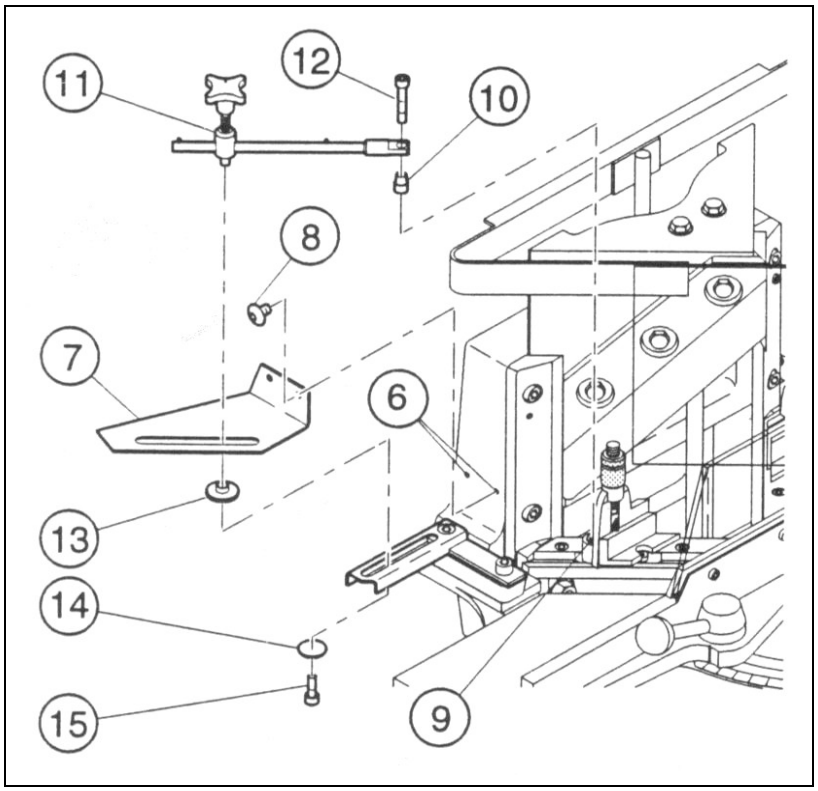

L-1-2-1

dan-list A/S
MASKINFABRIK
Haraldsvej 21 - DK-8960 Randers - Denmark
Tel.: +45 8643 5155 - Fax: +45 8643 5100
e-mail: danlist@danlist.dk
www.danlist.dk - www.danlistvideos.com

Installation Instructions

Install the attachment on the left side first.

1. The knife block unit must be in the rearmost position and locked in the bottom position. **Under no circumstances must the knife block be moved during the installation of the automatic rebate support system.**

2. Remove the screws (1) from the short guide rail (2). The screws (1) are replaced by screws (5).

3. Locate bushes (3) in the borings on the short guide rail (2). If the bushes (3) do not protrude above the borings put one of the included four washers (not shown on the drawing) under each bush.

4. Install the bottom part (4) on the short guide rail (2) with the screws (5).

5. The screws (5) are screwed in so that there is a distance of about 0.1 mm between the slide frame and the short guide rail (2).

6. Repeat this process for the right hand side of the attachment.

7. Place the included distance piece (PVC) on top of the bottom part (4), (covering the slider hole) Place the top plate (7) on top of the distance piece, and locate the front edge of the vertical side of the top plate, so that it is in line with the gap between the slide frame and the long guide. Mark and drill the two holes (6) 4.2 mm (drill bit included) in the slide frame according to the holes in the top plate (7) (depth of holes approximately 15 mm).
   NOTE: On machines delivered after 1995.02.01 the holes are already pre-drilled.

8. Secure the top plate (7) to the slide frame with the two self tapping screws (8).

9. Remove screw (9) in the rebate support and put in the spacer bush (10).

10. Install the draw bar (11) with the screw (12) - the draw bar holder must slide in the slot on both the top plate (7) and the bottom part (4).

11. Place the slide bar (13) between the top plate (7) and the bottom part (4).

12. Locate the washer (14) with the screw (15).



Beware of the extremely sharp knives

dan-list A/S
MASKINFABRIK
Haraldsvej 21 - DK-8960 Randers - Denmark
Tel.: +45 8643 5155 - Fax: +45 8643 5100
e-mail: danlist@danlist.dk
www.danlist.dk - www.danlistvideos.com

Adjustment of Rebate Supports

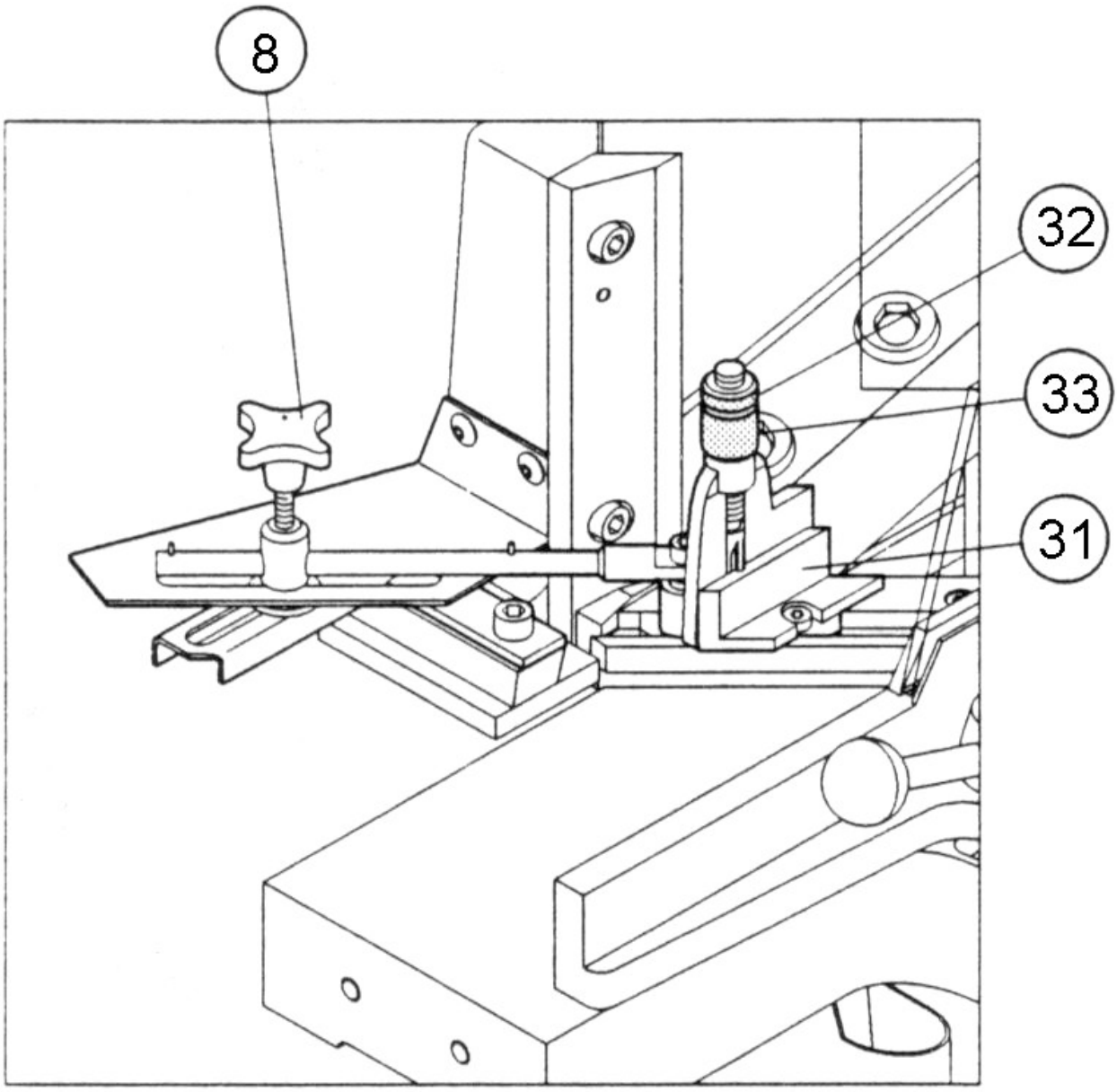

L-1-3

dan-list A/S
MASKINFABRIK
Haraldsvej 21 - DK-8960 Randers - Denmark
Tel.: +45 8643 5155 - Fax: +45 8643 5100
e-mail: danlist@danlist.dk
www.danlist.dk - www.danlistvideos.com

Adjustment of Rebate Supports

The knife block must be in the topmost position during the adjustment.

The rebate supports are only used when cutting mouldings which have a rebate.

To adjust the rebate support to the current work piece, the star wheel (8) and knurled lock nuts (32) are loosened.

Place the moulding in the machine. Slide the rebate supports (31) into the rebate of the moulding.

Press the moulding down on the machine table.

The height of the rebate supports is adjusted by means of the knurled nut (33). The rebate supports must be adjusted so that there is approx. 0.5 mm clearance between the rebate of the moulding and the support.

After the adjustment the knurled lock-nuts (32) are tightened.
The rebate support draw bars are locked in position with star wheel (8) so that they have a clearance of about 0.5 mm from the moulding.

If desired, the rebate supports can be removed from the machine when the knife block is in the rearmost position.



Beware of the extremely sharp knives

dan-list A/S
MASKINFABRIK
Haraldsvej 21 - DK-8960 Randers - Denmark
Tel.: +45 8643 5155 - Fax: +45 8643 5100
e-mail: danlist@danlist.dk
www.danlist.dk - www.danlistvideos.com

Ekstraudstyr Falsstøtter, autom. – Accessories- Automatic Rebate Supports.
Zusatzausrüstung Falzauflagen, autom.

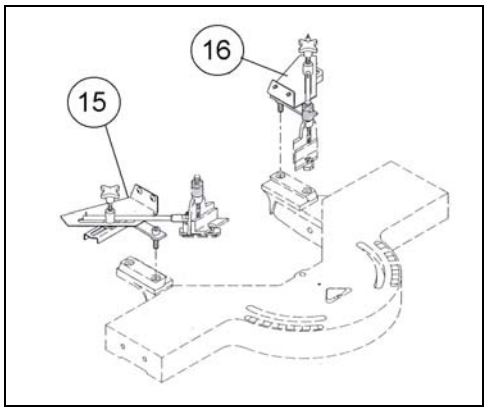

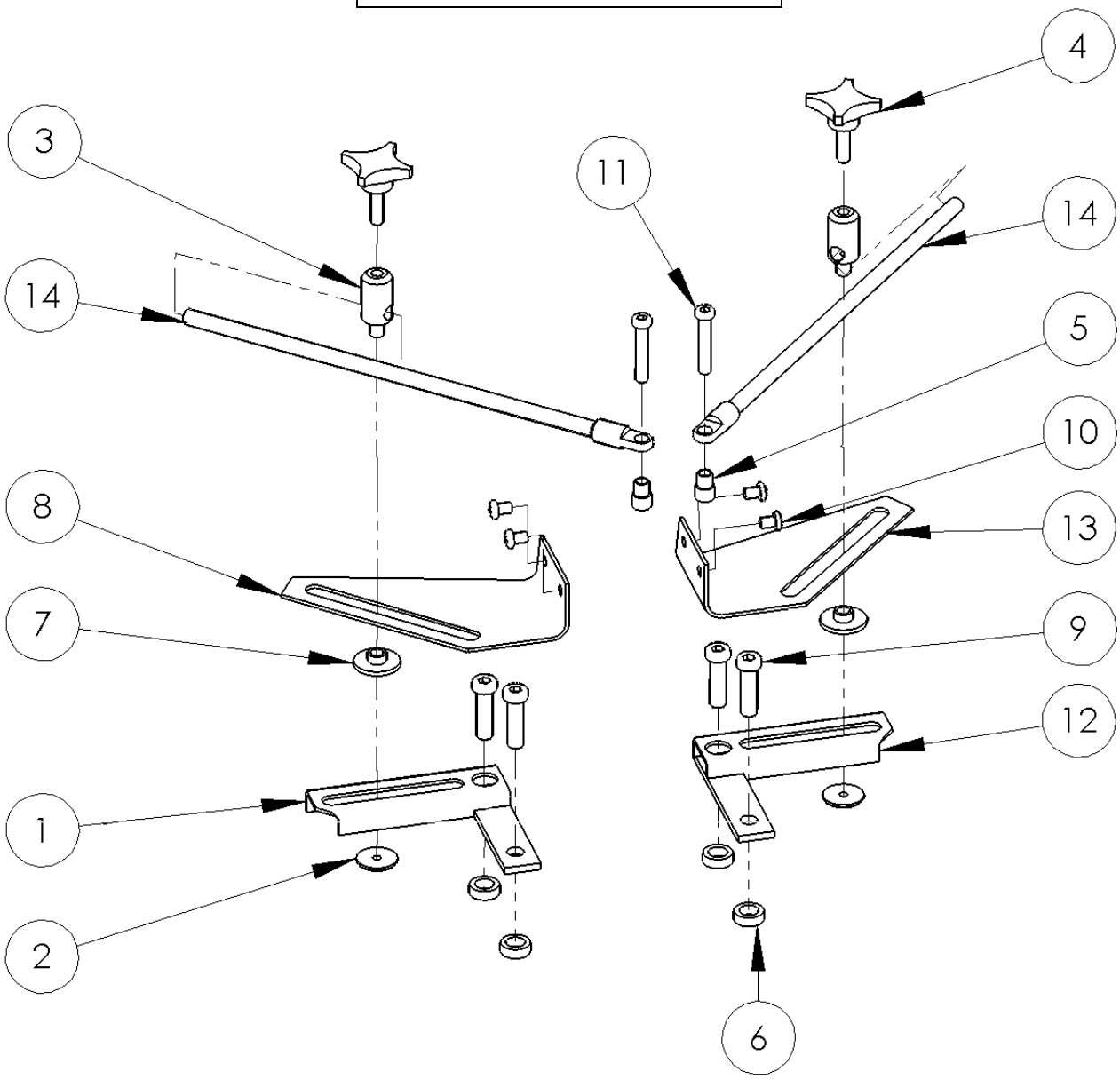

dan-list A/S
MASKINFABRIK
Haraldsvej 21 - DK-8960 Randers - Denmark
Tel.: +45 8643 5155 - Fax: +45 8643 5100
e-mail: danlist@danlist.dk
www.danlist.dk - www.danlistvideos.com

Ekstraudstyr Falsstøtter, autom. – Accessories- Automatic Rebate Supports. Zusatzausrüstung Falzauflagen, autom.

Pos.	Art. No.	Betegnelse	Designation	Bezeichnung
1	05000121V	Underpart	Bottom Part	Unterteil
2	05000125	Underlagsskive	Washer	Unterlegscheibe
3	05000123	Holder	Holder	Halter
4	60785007	Stjernehjul	Star Wheel	Sterngriff
5	05000127	Bøsning	Spacing bush	Buchse
6	05000126	Bøsning	Bushes	Buchse
7	05000124	Glider	Slide Bush	Gleitstück
8	05000120V	Overplade	Top Plate	Oberplatte
9	50008030	Cylinderskrue FZ	Cylinder Screw	Zylinderschraube
10	49005008	Rundhovedet skrue	Screw	Schraube
11	50006035	Cylinderskrue FZ	Cylinder Screw	Zylinderschraube
12	05000121H	Underpart	Bottom Part	Unterteil
13	05000120H	Overplade	Top Plate	Oberplatte
14	05000122	Trækstang	Draw Bar	Verbindungsstange
15	0900 V	Falsstøtte, automatik Komplet, venstre	Automatic Rebate Support, complete, left hand	Falzauflage, Automatik Komplett, links
16	0900 H	Falsstøtte, automatik Komplet, højre	Automatic Rebate Support, complete, right hand	Falzauflage, Automatik Komplett, rechts