## The Best Choice for the Most Benefit!

LSIS always tries its best to bring the greatest benefit to its customers.

# AC SERVO DRIVE

**XGT Servo**

XDL-L7SB Series(400V) User Manual



### Safety Precautions

- Read all safety precautions before using this product.
- After reading this manual, store it in a readily accessible location for future reference.

LS IS

www.lsis.com

# Introduction

Hello. Thank you for choosing LSIS XDL-L7 Series.

This user manual describes how to use this product safely and efficiently.

Failure to comply with the guidelines outlined in this manual may cause personal injury or damage to the product. Be sure to read this manual carefully before using this product and follow all guidelines contained therein.

- The contents of this manual are subject to change without notice.
- The reproduction of part or all of the contents of this manual in any form, by any means or for any purpose is strictly prohibited without the explicit written consent of LSIS.
- LSIS retains all patents, trademarks, copyrights and other intellectual property rights to the material in this manual. The information contained in this manual is only intended for use with LSIS products.

**Safety precautions are categorized as either Warnings or Cautions, depending on the severity of the precaution.**

| Precautions | Definition |
|---|---|
| **Danger** | Failure to comply with these guidelines may cause serious injury or death. |
| **Caution** | Failure to comply with these guidelines may cause personal injury or property damage. |

- Precautions listed as Cautions may also result in serious injury .

## ■ Electric Safety Precautions

| Danger |
|---|
| ▪ Before wiring or inspection tasks, turn off the power. Wait 15 minutes until the charge lamp goes off, and then check the voltage.<br>▪ Ground both the servo drive and the servo motor.<br>▪ Only specially trained technicians may perform wiring on this product.<br>▪ Install both the servo drive and servo motor before performing any wiring.<br>▪ Do not operate the device with wet hands.<br>▪ Do not open the servo drive cover during operation.<br>▪ Do not operate the device with the servo drive cover removed.<br>▪ Even if the power is off, do not remove the servo drive cover. |

## ■ Fire Safety Precautions

| Caution |
|---|
| ▪ Install the servo drive, the servo motor, and the regenerative resistor on non-combustible materials.<br>▪ Disconnect the input power if the servo drive malfunctions. |

## ■ Installation Precautions

Store and operate this product under the following environmental conditions.

| Environment | Conditions | |
|---|---|---|
| | Servo drive | Servo motor |
| Operating temp. | 0 ~ 50 ℃ | 0 ~ 40 ℃ |
| Storage temp. | -20 ~ 65 ℃ | -10 ~ 60 ℃ |
| Operating humidity | Below 90% RH (no condensation) | 20~80% RH(no condensation) |
| Storage humidity | | 20~80% RH(no condensation) |
| Altitude | 1000 m or lower | |
| Spacing | ▪ When installing 1 unit:<br>• More than 40 mm at the top and bottom of the control panel<br>• More than 10 mm on the left and right sides of the control panel<br>▪ When installing 2 or more units:<br>• More than 100 mm at the top of the control panel<br>• More than 40 mm at the bottom of the control panel<br>• More than 30 mm on the left and right sides of the control panel<br>• More than 2 mm between units<br>• Refer to Section 2.2.2, "Wiring the Control Panel." | |
| Other | ▪ Ensure the installation location is free from dust, iron, corrosive gas, and combustible gas.<br>▪ Ensure the installation location is free from vibrations or the potential for hard impacts. | |

**⚠ Caution**

- Install the product with the correct orientation.
- Do not drop the product or expose it to hard impact.
- Install this product in a location that is free from water, corrosive gas, combustible gas, or flammable materials.
- Install this product in a location capable of supporting the weight of this product.
- Do not stand on the product or place heavy objects on top of it.
- Always maintain the specified spacing when installing the servo drive.
- Ensure that there are no conductive or flammable debris inside the servo drive or the servo motor.
- Firmly attach the servo motor to the machine.
- Install the servo motor with a correctly oriented decelerator.
- Do not touch the rotating unit of the servo motor during operation.
- Do not apply excessive force when connecting the couplings to the servo motor shaft.
- Do not place loads on the servo motor shaft that exceed the specified amount.

## ■ Wiring Precautions

| ⚠ Caution |
| --- |
| ▪ Always use an AC 380-480 V power input for the servo drive.<br>▪ Always connect the servo drive to a ground terminal.<br>▪ Do not connect commercial power directly to the servo motor.<br>▪ Do not connect commercial power directly to the U, V, W output terminals of the servo drive.<br>▪ Connect the U, V, W output terminals of the servo drive directly to the U, V, W input terminals of the servo motor, but do not install magnetic contactors between the wires.<br>▪ Always use pressurized terminals with insulation tubes when connecting the servo drive power terminal.<br>▪ When wiring, be sure to separate the U, V, and W cables for the servo motor power and encoder cable.<br>▪ Always use the robot cable if the motor moves.<br>▪ Before you perform power line wiring, turn off the input power of the servo drive, and then wait until the charge lamp goes off completely.<br>▪ Be sure to use shielded twisted-pair wire for the pulse command signal (PF+, PF-, PR+, PR-), speed command signal (SPDCOM), and torque command signal (TRQCOM). |

## ■ Startup Precautions

| ⚠ Caution |
| --- |
| ▪ Check the input voltage (AC 380-480 V) and power unit wiring before supplying power to the device.<br>▪ The servo must be in the OFF mode when you turn on the power.<br>▪ Before you turn on the power, check the motor's ID and the encoder pulse for XDL-L7 □B □□□□.<br>▪ Set the motor ID ([P0-00]) and the encoder pulse ([P0-02]) for XDL-L7 □B □□□A first after you turn on the power.<br>▪ After you complete the above settings, set the drive mode for the servo drive that is connected to the upper level controller in [P0-03].<br>▪ Refer to Chapter 1.2 "System Configuration" to perform CN1 wiring for the servo drive according to each drive mode.<br>▪ You can check the ON/OFF state for each input terminal of CN1 at [St-14]. |

## ■ Handling and Operating Precautions

| ⚠ Caution |
| --- |
| ▪ Check and adjust each parameter before operation.<br>▪ Do not touch the rotating unit of the motor during operation.<br>▪ Do not touch the heat sink during operation.<br>▪ Be sure to attach or remove the CN1 and CN2 connectors when the power is off.<br>▪ Extreme change of parameters may cause system instability. |

## ■ Usage Precautions

| ⚠ Caution |
| --- |
| ▪ Install an emergency cut-off switch which immediately stops operation in an emergency.<br>▪ Reset the alarm when the servo is off. Be warned that the system restarts immediately if the alarm is reset while the servo is on.<br>▪ Use a noise filter or DC reactor to minimize electromagnetic interference. This prevents nearby electrical devices from malfunctioning due to interference.<br>▪ Only use approved servo drive and servo motor combinations.<br>▪ The electric brake on the servo motor stops operation. Do not use it for ordinary braking.<br>▪ The electric brake may malfunction if the brake degrades or if the mechanical structure is improper (for example, if the ball screw and servo motor are combined via the timing belt). Install an emergency stop device to ensure mechanical safety. |

## ■ Malfunction Precautions

| ⚠ Caution |
| --- |
| ▪ Install a servo motor with an electric brake or separate the brake system for use during emergencies or device malfunctions.<br>▪ If an alarm occurs, solve the underlying cause of the problem. After solving the problem and ensuring safe operation, deactivate the alarm and resume operation.<br>▪ Do not approach the machine until the problem is solved. |

## ■ Repair/Inspection Precautions

| ⚠ Caution |
| --- |
| ▪ Before performing servicing tasks, turn off the power. Wait 15 minutes until the charge lamp goes off, and then check the voltage. Enough voltage may remain in the condenser after the power is off to cause an electric shock.<br>▪ Only authorized personnel may repair and inspect the device or replace its parts.<br>▪ Do not modify this device in any way. |

## ■ General Precautions

| ⚠ Caution |
| --- |
| ▪ This user manual is subject to change due to product modification or changes in standards. If such changes occur, we issue a new user manual with a new product number. |

## ■ Product Application

| ⚠ Caution |
| --- |
| ▪ This product is not designed or manufactured for machines or systems intended to sustain human life.<br>▪ This product is manufactured under strict quality control conditions. Nevertheless, install safety devices if installing the device in a facility where product malfunctions may result in a major accident or a significant loss. |

## ■ EEPROM Lifespan

| ⚠ Caution |
| --- |
| ▪ The EEPROM is rewritable up to 1 million times for the purpose of recording parameter settings and other information. The servo drive may malfunction if the total number of the following tasks exceeds 1 million, depending on the lifespan of the EEPROM.<br>• EEPROM recording as a result of parameter changes<br>• EEPROM recording as a result of an alarm |

# Table of Contents

**Introduction** ..... iii

**Table of Contents** ..... viii

**1. Product Components and Signals** ..... 1-1

**1.1** Product Components ..... 1-1
**1.1.1** Product Verification ..... 1-1
**1.1.2** Part Names ..... 1-3

**1.2** System Configuration ..... 1-9
**1.2.1** Overview ..... 1-9
**1.2.2** Wiring Diagram of the Entire CN1 Connector ..... 1-11
**1.2.3** Example of Location Drive Mode Wiring ..... 1-12
**1.2.4** Example of Speed Drive Mode Wiring ..... 1-13
**1.2.5** Example of Torque Drive Mode Wiring ..... 1-14
**1.2.6** Example of Speed/Location Drive Mode Wiring ..... 1-15
**1.2.7** Example of Speed/Torque Drive Mode Wiring ..... 1-16
**1.2.8** Example of Location/Torque Drive Mode Wiring ..... 1-17

**1.3** Signals ..... 1-18
**1.3.1** Digital Input Contact Signal ..... 1-18
**1.3.2** Analog Input Contact Signal ..... 1-19
**1.3.3** Digital Output Contact Signal ..... 1-19
**1.3.4** Monitor Output Signal and Output Power ..... 1-20
**1.3.5** Pulse Train Input Signal ..... 1-20
**1.3.6** Encoder Output Signal ..... 1-21

**2. Installation** ..... 2-1

**2.1** Servo motor ..... 2-1
**2.1.1** Operating Environment ..... 2-1
**2.1.2** Preventing Impact ..... 2-1
**2.1.3** Motor Connection ..... 2-1
**2.1.4** The Load Device Connection ..... 2-2
**2.1.5** Cable Installation ..... 2-2

**2.2** Servo drive ..... 2-3
**2.2.1** Operating Environment ..... 2-3
**2.2.2** Wiring the Control Panel ..... 2-4
**2.2.3** Power Supply Wiring ..... 2-5

**3. Wiring** ..... 3-1

**3.1** Internal Diagram ..... 3-1
**3.1.1** XDL-L7 Drive Block Diagram [XDL-L7SB010□ - XDL-L7SB035□] ..... 3-1
**3.1.2** XDL-L7 Drive Block Diagram [XDL-L7SB050□ - XDL-L7SB075□] ..... 3-2
**3.1.3** XDL-L7 Drive Block Diagram [XDL-L7SB150□] ..... 3-3

**3.2** Power Supply Wiring ..... 3-4
**3.2.1** XDL-L7 Drive Wiring Diagram [XDL-L7SB010□ - XDL-L7SB035□] ..... 3-4
**3.2.2** XDL-L7 Drive Wiring Diagram [XDL-L7SB050□ - XDL-L7SB075□] ..... 3-5
**3.2.3** XDL-L7 Drive Wiring Diagram [XDL-L7SB150□] ..... 3-5

**3.2.4** Power Circuit Electrical Components ..... 3-7
**3.3** Example of wiring with PLC ..... 3-13
**3.3.1** XGT PLC ..... 3-13
**3.4** Timing Diagram ..... 3-20
**3.4.1** Timing Diagram During Power Input ..... 3-20
**3.4.2** Timing Diagram During an Alarm Trigger ..... 3-21
**3.5** Wiring the Control Signals ..... 3-22
**3.5.1** The Contact Input Signal ..... 3-22
**3.5.2** The Contact Output Signal ..... 3-23
**3.5.3** Analog Input/Output Signals ..... 3-24
**3.5.4** Pulse Train Input Signal ..... 3-25
**3.5.5** Encoder Output Signal ..... 3-26
**3.6** Quadrature Encoder Signaling Unit (CN2) Wiring ..... 3-27
**3.6.1** XLCS-E□AS Cable ..... 3-27
**3.6.2** XLCS-E□BS Cable ..... 3-27
**3.7** Connecting the Serial Encoder Signals (CN2) ..... 3-28
**3.7.1** XLCS-E□CS Cable ..... 3-28
**3.7.2** XLCS-E□DS Cable ..... 3-29
**3.7.3** XLCS-E□ES Cable ..... 3-29
**3.8** Multi-turn Encoder Signaling Unit (CN2) Wiring ..... 3-30
**3.8.1** XLCS-E□CS1 Cable ..... 3-30
**3.8.2** XLCS-E□DS1 Cable ..... 3-31
**3.8.3** XLCS-E□ES1 Cable ..... 3-31
**3.9** Transmission of Absolute Value Encoder Data ..... 3-32
**3.9.1** Transmission of Absolute Value Encoder Data ..... 3-32

**4. Parameters ..... 4-1**

**4.1** How to Use the Loader ..... 4-1
**4.1.1** Name and Function of Each Part ..... 4-1
**4.1.2** Status Summary Display ..... 4-2
**4.1.3** Parameter Handling ..... 4-4
**4.1.4** Data Display ..... 4-8
**4.1.5** External Input Contact Signal Display [St-14] ..... 4-10
**4.1.6** External Input Signal and Logic Definition ..... 4-11
**4.1.7** External Output Contact Signal Display [St-15] ..... 4-21
**4.1.8** External Output Signal and Logic Definition ..... 4-22
**4.2** Parameters ..... 4-28
**4.2.1** Parameter System ..... 4-28
**4.2.2** Operation Status Display Parameter ..... 4-29
**4.2.3** System Parameters ..... 4-32
**4.2.4** Control Setting Parameter ..... 4-36
**4.2.5** Input/Output Setting Parameter ..... 4-39
**4.2.6** Speed Operation Setting Parameter ..... 4-42
**4.2.7** Position Operation Setting Parameter ..... 4-44
**4.2.8** Operation Handling Parameter ..... 4-47
**4.3** Operation Status Display ..... 4-51
**4.3.1** Status Display [St-00] ..... 4-51

**4.3.2** Speed Display ..... 4-51
**4.3.3** Position Display ..... 4-51
**4.3.4** Torque and Load Display ..... 4-51
**4.3.5** I/O Status Display ..... 4-52
**4.3.6** Miscellaneous Status and Data Display ..... 4-52
**4.3.7** Version Display ..... 4-53

**4.4** Parameter Setting ..... 4-54
**4.4.1** Setting System Parameters ..... 4-54
**4.4.2** Control Parameters ..... 4-57
**4.4.3** Analog Input/Output Parameter Setting ..... 4-62
**4.4.4** Setting the Input/Output Contact Point Parameters ..... 4-63
**4.4.5** Setting Speed Operation Parameters ..... 4-65
**4.4.6** Position Operation Parameter Setting ..... 4-66

**4.5** Alarms and Warnings ..... 4-68
**4.5.1** Servo Alarm Status Summary Display List ..... 4-68
**4.5.2** Servo Warning Status Summary Display List ..... 4-70

**4.6** Motor Types and IDs ..... 4-71

**5. Handling and Operation ..... 5-1**

**5.1** Operation Checklist ..... 5-1
**5.1.1** Wiring Checklist ..... 5-1
**5.1.2** the Drive Signal (CN1) Wiring Checklist ..... 5-1
**5.1.3** Surrounding Environment Checklist ..... 5-1
**5.1.4** Machine Status Checklist ..... 5-1
**5.1.5** System Parameter Checklist ..... 5-2

**5.2** Handling ..... 5-3
**5.2.1** Manual JOG Operation [Cn-00] ..... 5-3
**5.2.2** Program JOG Operation [Cn-01] ..... 5-4
**5.2.3** Alarm Reset [Cn-02] ..... 5-5
**5.2.4** Reading Alarm History [Cn-03] ..... 5-6
**5.2.5** Alarm History Reset [Cn-04] ..... 5-7
**5.2.6** Auto Gain Tuning [Cn-05] ..... 5-8
**5.2.7** Phase Z Search Operation [Cn-06] ..... 5-9
**5.2.8** Input Contact Forced ON/OFF [Cn-07] ..... 5-10
**5.2.9** Output Contact Forced ON/OFF [Cn-08] ..... 5-12
**5.2.10** Parameter Reset [Cn-09] ..... 5-13
**5.2.11** Automatic Speed Command Offset Correction [Cn-10] ..... 5-14
**5.2.12** Automatic Torque Command Offset Correction [Cn-11] ..... 5-15
**5.2.13** Manual Speed Command Offset Correction [Cn-12] ..... 5-16
**5.2.14** Manual Torque Command Offset Correction [Cn-13] ..... 5-17
**5.2.15** Absolute Encoder Value Reset [Cn-14] ..... 5-18
**5.2.16** Instantaneous Maximum Load Factor Initialization [Cn-15] ..... 5-19
**5.2.17** Parameter Lock [Cn-16] ..... 5-20
**5.2.18** Current Offset [Cn-17] ..... 5-21

**6. Communication Protocol ..... 6-1**

**6.1** Overview and Communication Specifications ..... 6-1
**6.1.1** Overview ..... 6-1
**6.1.2** Communication Specifications and Cable Access Rate ..... 6-2

**6.2** Communication Protocol Base Structure....6-3
**6.2.1** Sending/Receiving Packet Structure....6-3
**6.2.2** Protocol Command Codes....6-5
**6.3** XDL-L7 Servo Drive Communication Address Table....6-10
**6.3.1** Operation Status Parameter Communication Address Table....6-10
**6.3.2** System Parameter Communication Address Table....6-12
**6.3.3** Control Parameter Communication Address Table....6-14
**6.3.4** Input/Output Parameter Communication Address Table....6-16
**6.3.5** Speed Operation Parameter Communication Address Table....6-17
**6.3.6** Position Operation Parameter Communication Address Table....6-18
**7. Product Specifications....7-1**
**7.1** Servo motor....7-1
**7.1.1** Product Features....7-1
**7.1.2** Outline Diagram....7-22
**7.2** Servo drive....7-29
**7.2.1** Product Features....7-29
7.2.2 Outline Diagram....7-31
**7.3** Options and Peripheral Devices....7-34
**8. Maintenance and Inspection....8-1**
**8.1** Maintenance and Inspection....8-1
**8.1.1** Precautions....8-1
**8.1.2** What to Inspect....8-1
**8.1.3** Replacing Parts....8-3
**8.2** Diagnosing and Troubleshooting Abnormalities....8-3
**8.2.1** Servo motor....8-4
**8.2.2** Servo Drive....8-5
**9. Appendix....9-1**
**9.1** Motor Types and IDs....9-1
**9.2** Test Drive Procedure....9-3
**User Manual Revision History....A**

# 1. Product Components and Signals

## 1.1 Product Components

### 1.1.1 Product Verification

1. Check the name tag to verify that the product received matches the model ordered
   - Does the servo drive's name plate match?
   - Does the servo motor's name plate match?
2. Check the product components and options.
   - Are the type and length of cables correct?
   - Does the regenerative resistor conform to the required standard?
     - Is the shape of the shaft correct?
     - Are there any abnormalities after mounting the oil seal or brake?
     - Are the gearbox and the gear ratios correct?
     - Is the encoder format correct?
3. Check the exterior of the device.
   - Are there any foreign substances or humidity in the device?
   - Is there any discoloration, contaminant, damage or disconnected wire?
   - Are the bolts tightly fastened to the joints?
   - Is there any abnormal sound or excessive friction during operation?

#### ■ The Servo Drive Product Format

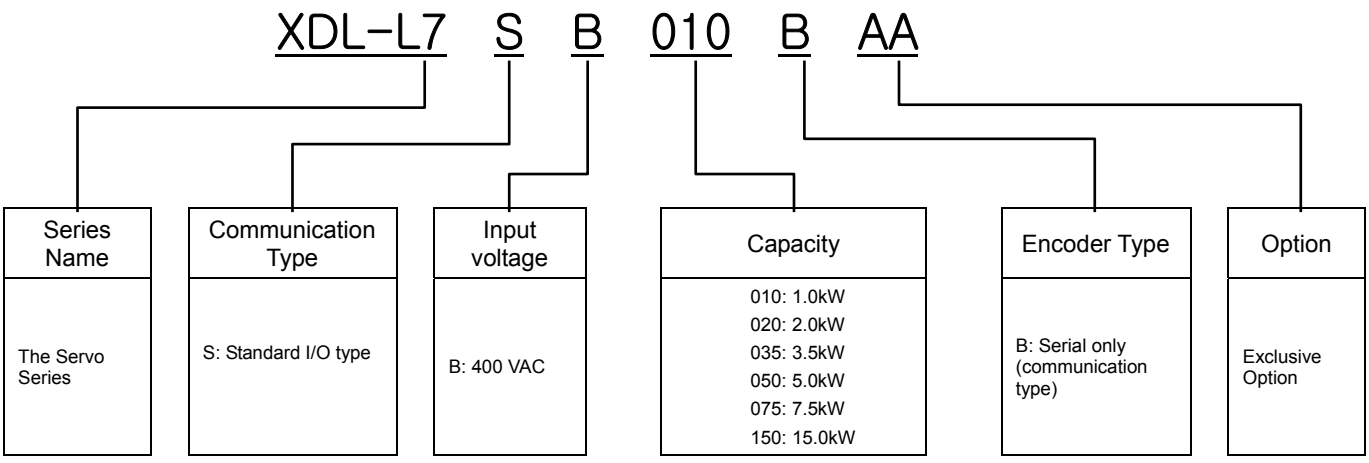

## ■ Servo Motor Product Format

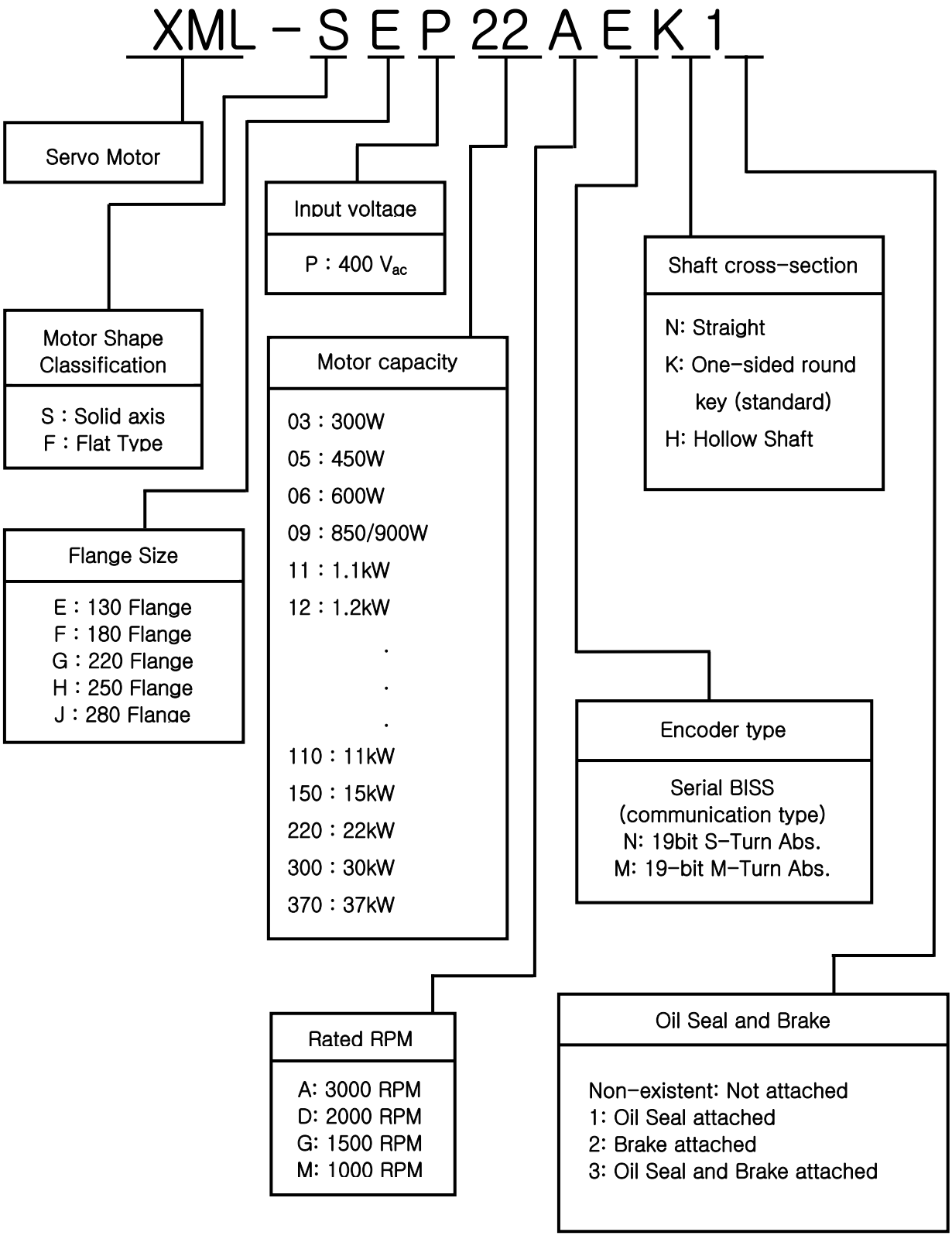

## 1.1.2 Part Names

### ■ Servo motor

- 80 Flange or below

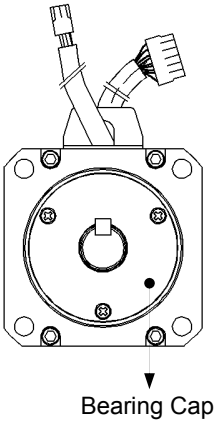


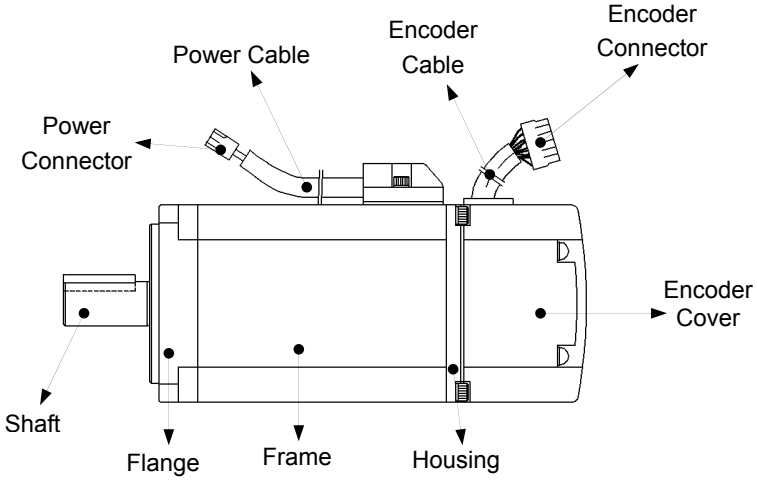


- 80 Flange or below (Flat type)

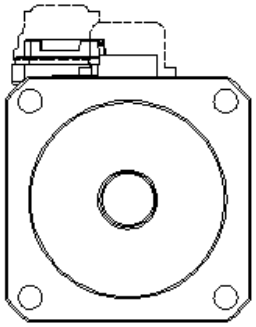

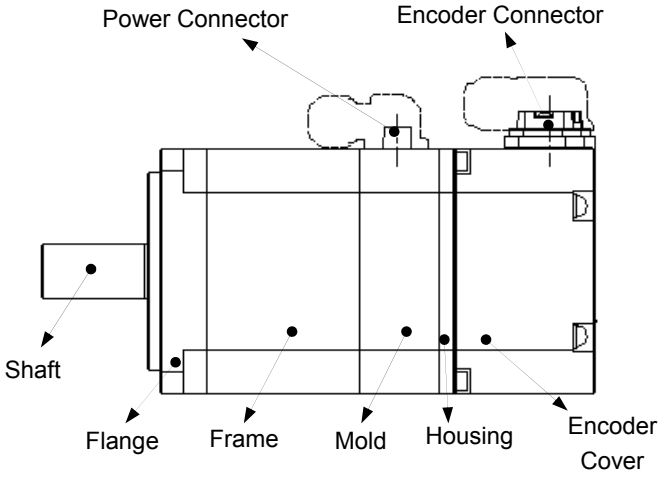


- 130 Flange or higher

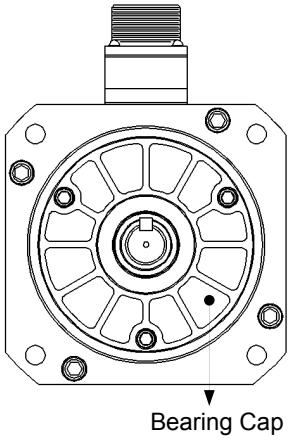


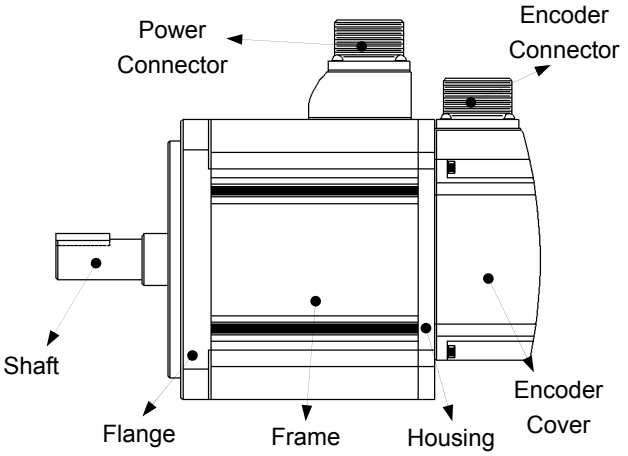

## ■ Servo drive

- XDL-L7SB 010□

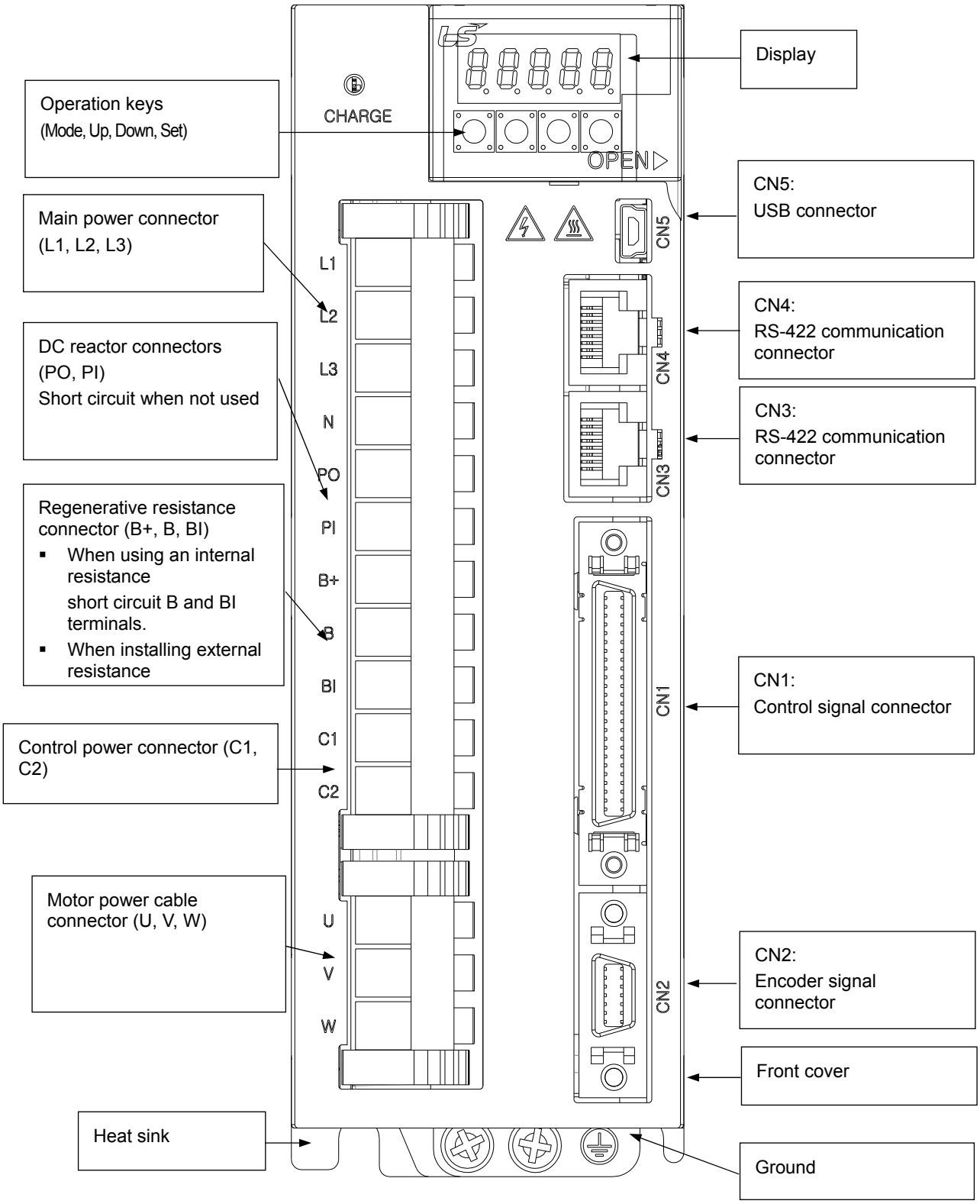

- XDL-L7SB 020□ / XDL-L7SB 035□

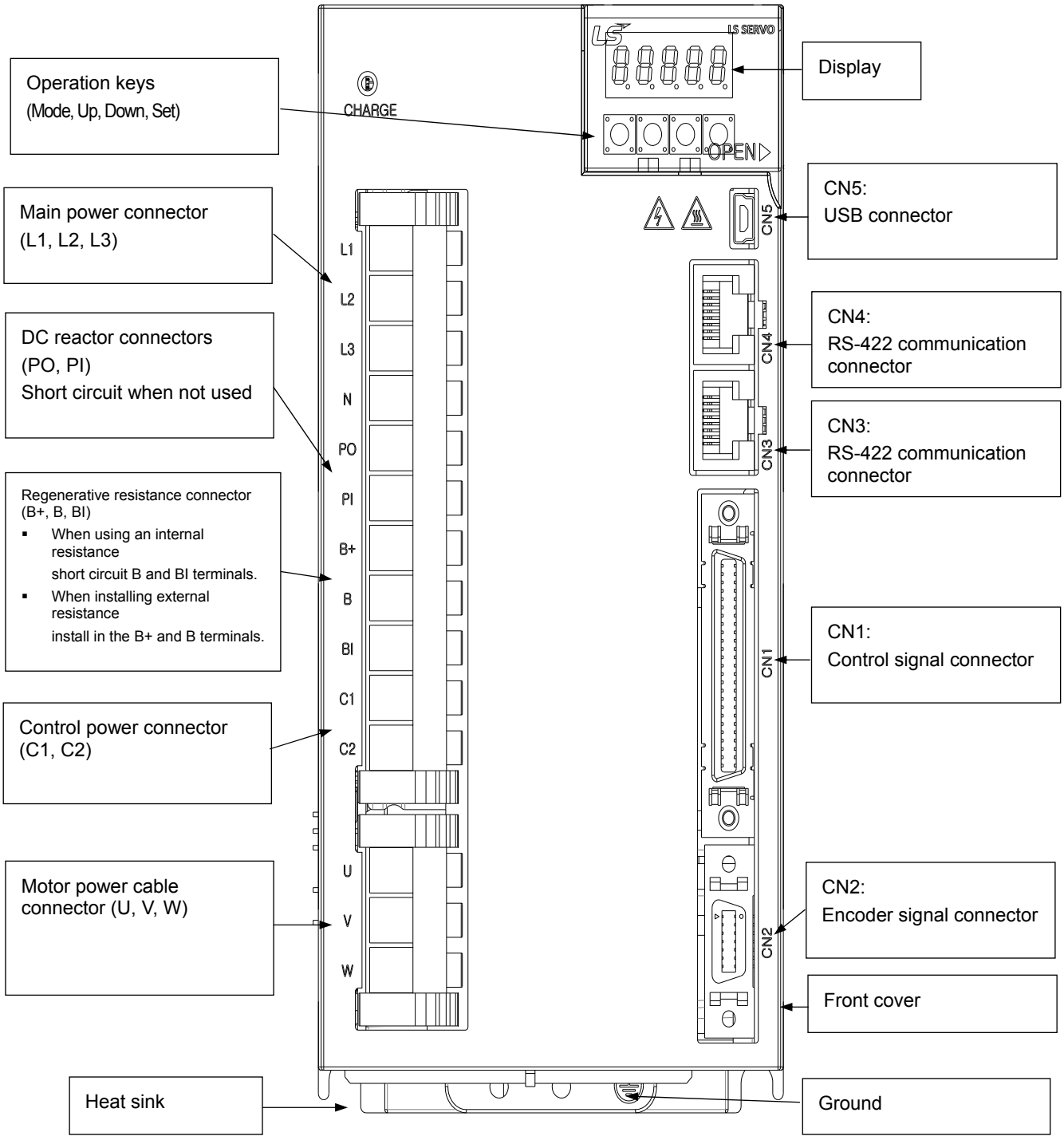

- XDL-L7SB 050□

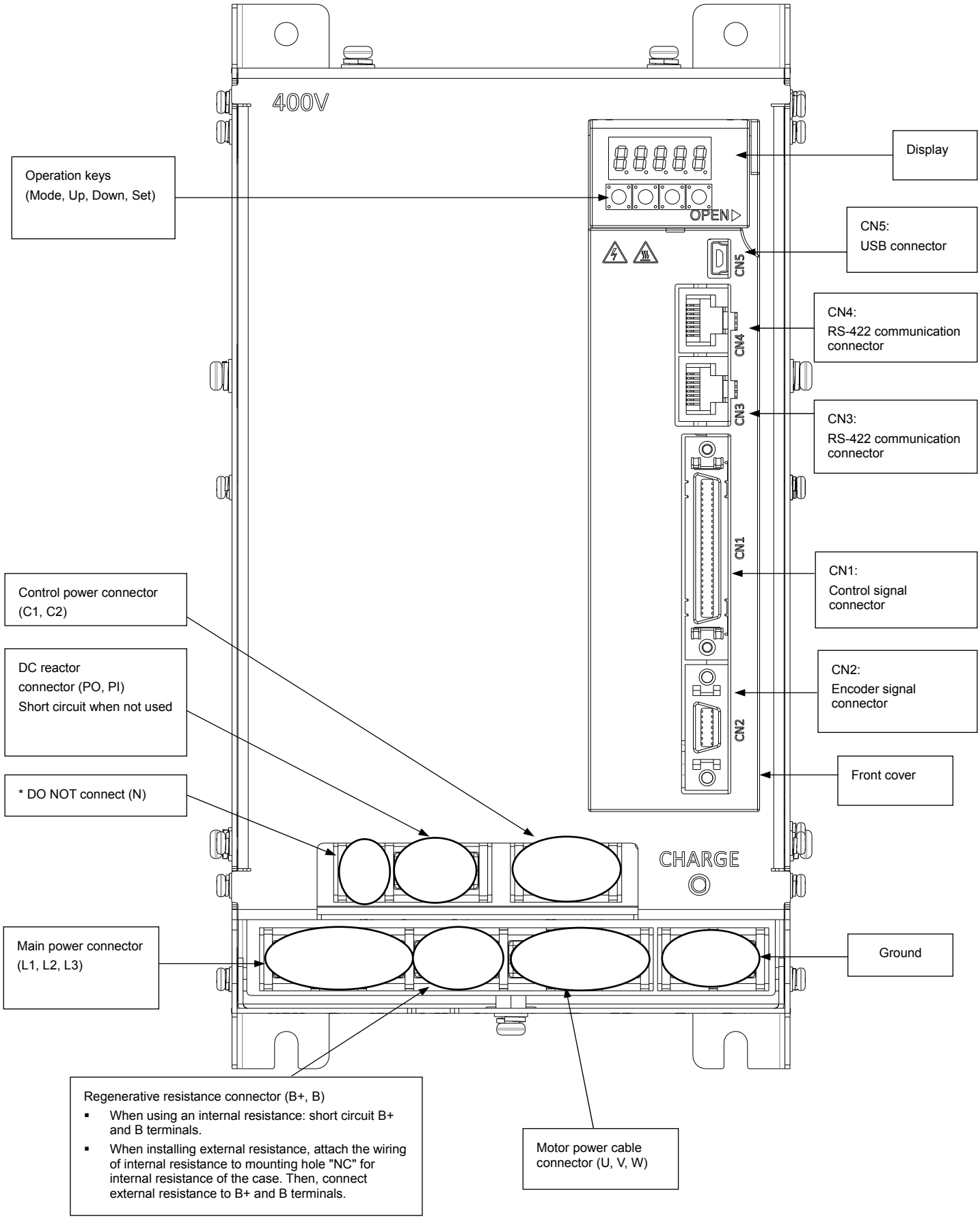
400V
Operation keys
(Mode, Up, Down, Set)
Display
OPEN
CN5:
USB connector
CN5
CN4:
RS-422 communication connector
CN4
CN3:
RS-422 communication connector
CN3
CN1
CN1:
Control signal connector
CN2:
Encoder signal connector
CN2
Front cover
Control power connector
(C1, C2)
DC reactor
connector (PO, PI)
Short circuit when not used
* DO NOT connect (N)
CHARGE
Main power connector
(L1, L2, L3)
Ground
Regenerative resistance connector (B+, B)
When using an internal resistance: short circuit B+ and B terminals.
When installing external resistance, attach the wiring of internal resistance to mounting hole "NC" for internal resistance of the case. Then, connect external resistance to B+ and B terminals.
Motor power cable connector (U, V, W)

- XDL-L7SB 075□

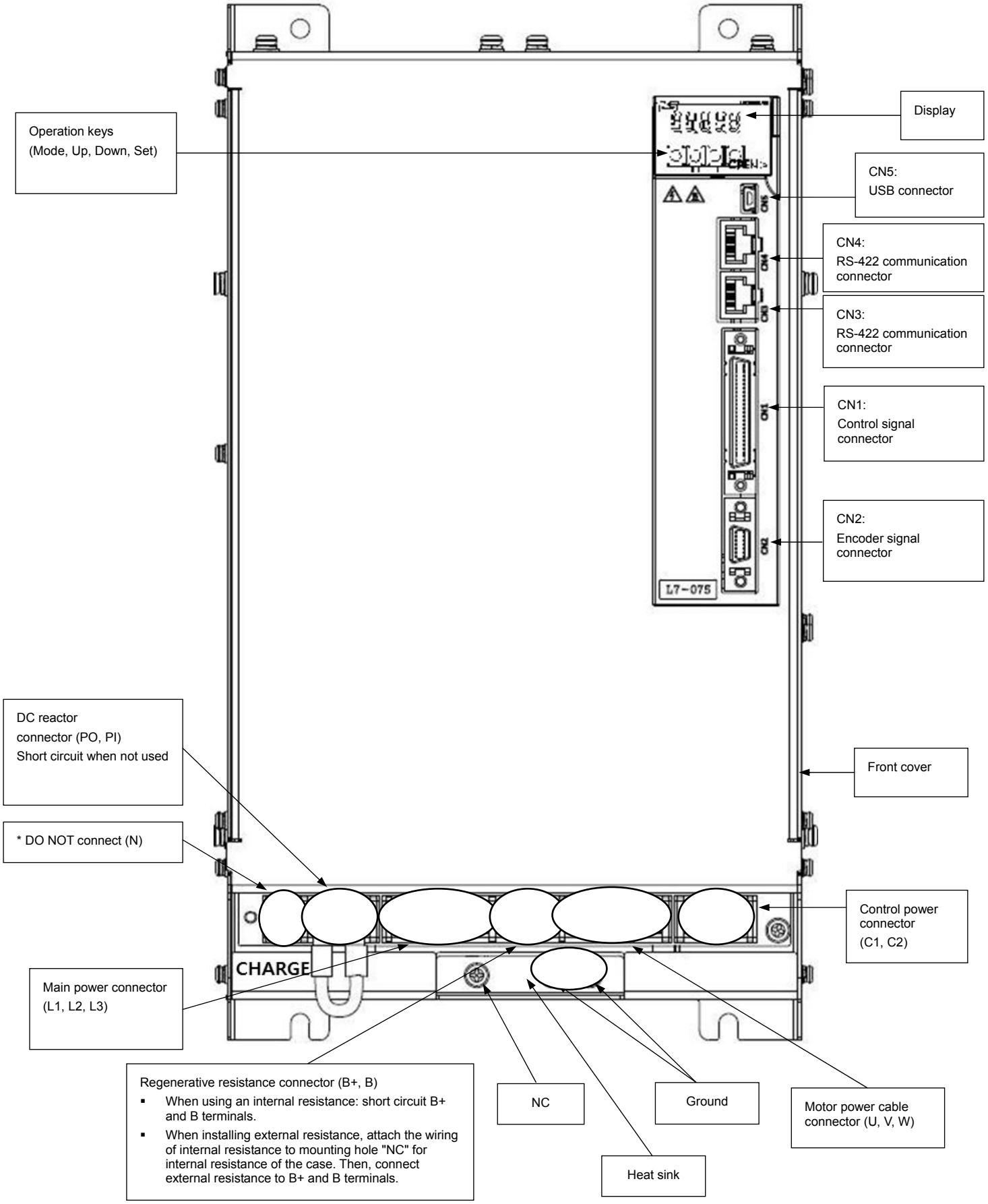
Operation keys
(Mode, Up, Down, Set)
Display
CN5:
USB connector
CN4:
RS-422 communication connector
CN3:
RS-422 communication connector
CN1:
Control signal connector
CN2:
Encoder signal connector
L7-075
DC reactor
connector (PO, PI)
Short circuit when not used
* DO NOT connect (N)
Front cover
Control power connector
(C1, C2)
CHARGE
Main power connector
(L1, L2, L3)
Regenerative resistance connector (B+, B)
When using an internal resistance: short circuit B+ and B terminals.
When installing external resistance, attach the wiring of internal resistance to mounting hole "NC" for internal resistance of the case. Then, connect external resistance to B+ and B terminals.
NC
Ground
Motor power cable connector (U, V, W)
Heat sink

- XDL-L7SB 150□

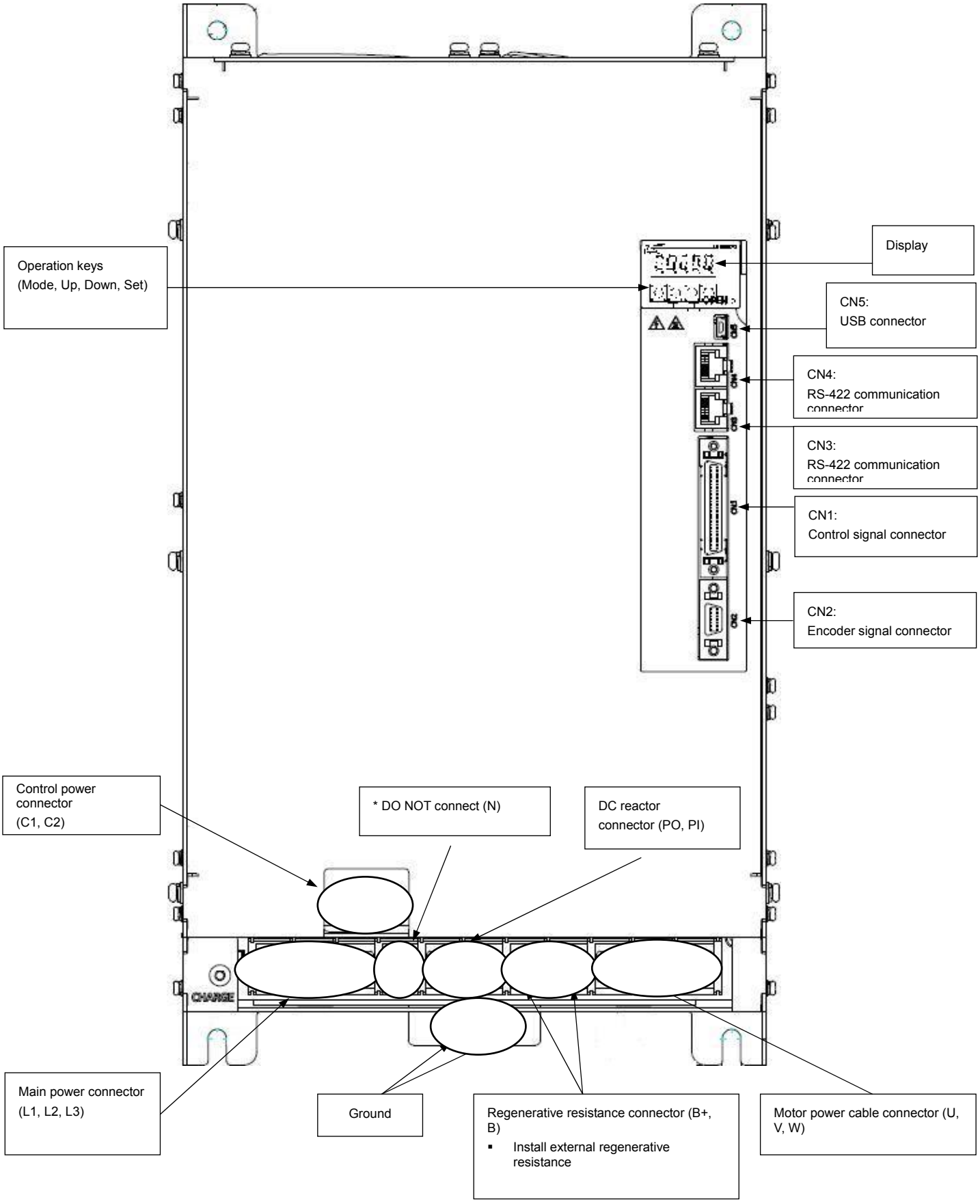
Operation keys
(Mode, Up, Down, Set)
Display
CN5:
USB connector
CN4:
RS-422 communication connector
CN3:
RS-422 communication connector
CN1:
Control signal connector
CN2:
Encoder signal connector
Control power connector
(C1, C2)
* DO NOT connect (N)
DC reactor
connector (PO, PI)
CHARGE
Main power connector
(L1, L2, L3)
Ground
Regenerative resistance connector (B+, B)
Install external regenerative resistance
Motor power cable connector (U, V, W)

# 1.2 System Configuration

## 1.2.1 Overview

The XDL-L7 servo system can be configured in various ways depending on its interface with the upper level controller.

### (1) Position Operation System

The servo is run by pulse commands. You can change the location of the servo motor by changing command pulses based on a certain transfer unit.

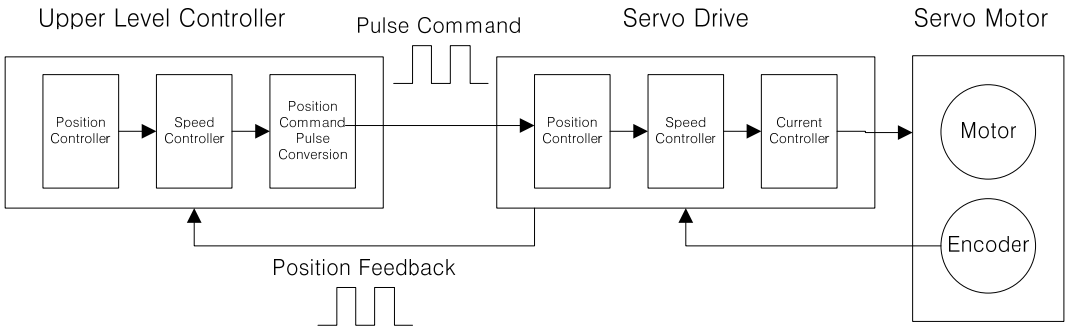


- Advantages: The structure of the upper level controller is simple because pulse input is linked to transfer units.
- Disadvantage:
  - Fast rotation is compromised when a precise transfer unit is used.
  - Response is low because multiple levels of controllers are used.

### (2) Speed Operation System

The servo is run by speed commands. There are two types of speed commands: analog voltage command and digital speed command.

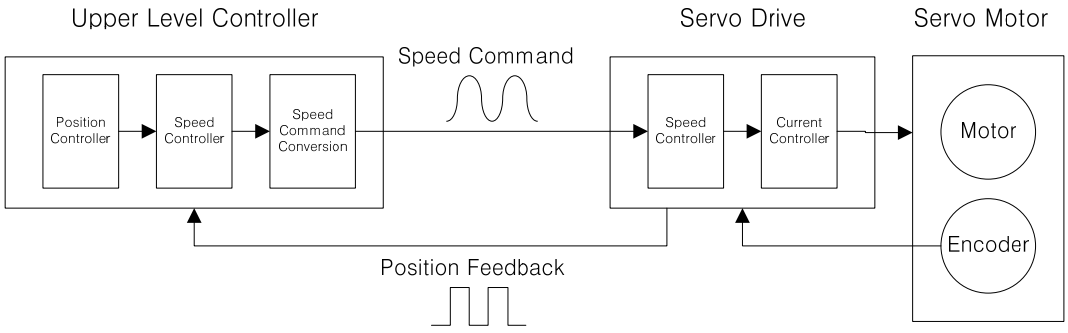


- Advantages:
  - The servo responds quickly.
  - Precision control is easy.
- Disadvantage: The upper level controller is complex.

## (3) Torque Operation System

The servo is run by torque commands. Analog voltage-based commands are used.

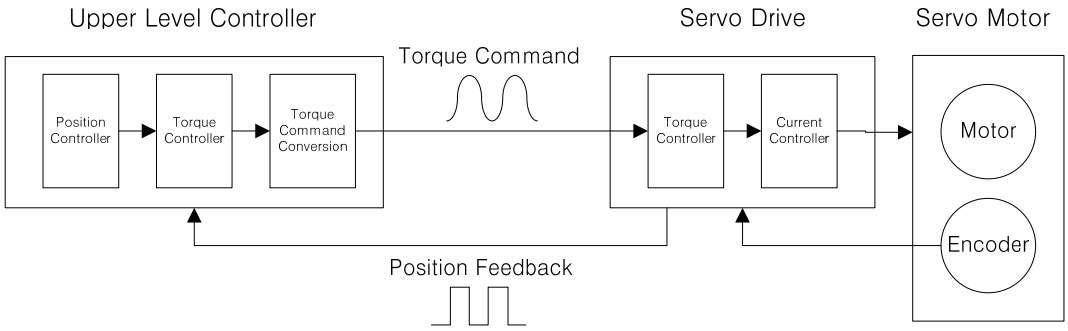


- Advantages:
  - The servo responds quickly.
  - Precision control is easy.
- Disadvantage: The upper level controller is complex.

## (4) Modes of Operation

The XDL-L7 servo drive can be run in torque, speed, and location modes, depending on its interface with the upper level controller. The operation modes can be switched by parameters or digital input contact point.

| Modes of Operation | System Configuration |
|---|---|
| 0 | The servo is run on the torque operation system. |
| 1 | The servo is run on the speed operation system. |
| 2 | The servo is run on the position operation system. |
| 3 | The servo is run with the speed and position operation systems as points of contact. |
| 4 | The servo is run with the speed and torque operation systems as points of contact. |
| 5 | The servo is run with the location and torque operation systems as points of contact. |

## 1.2.2 Wiring Diagram of the Entire CN1 Connector

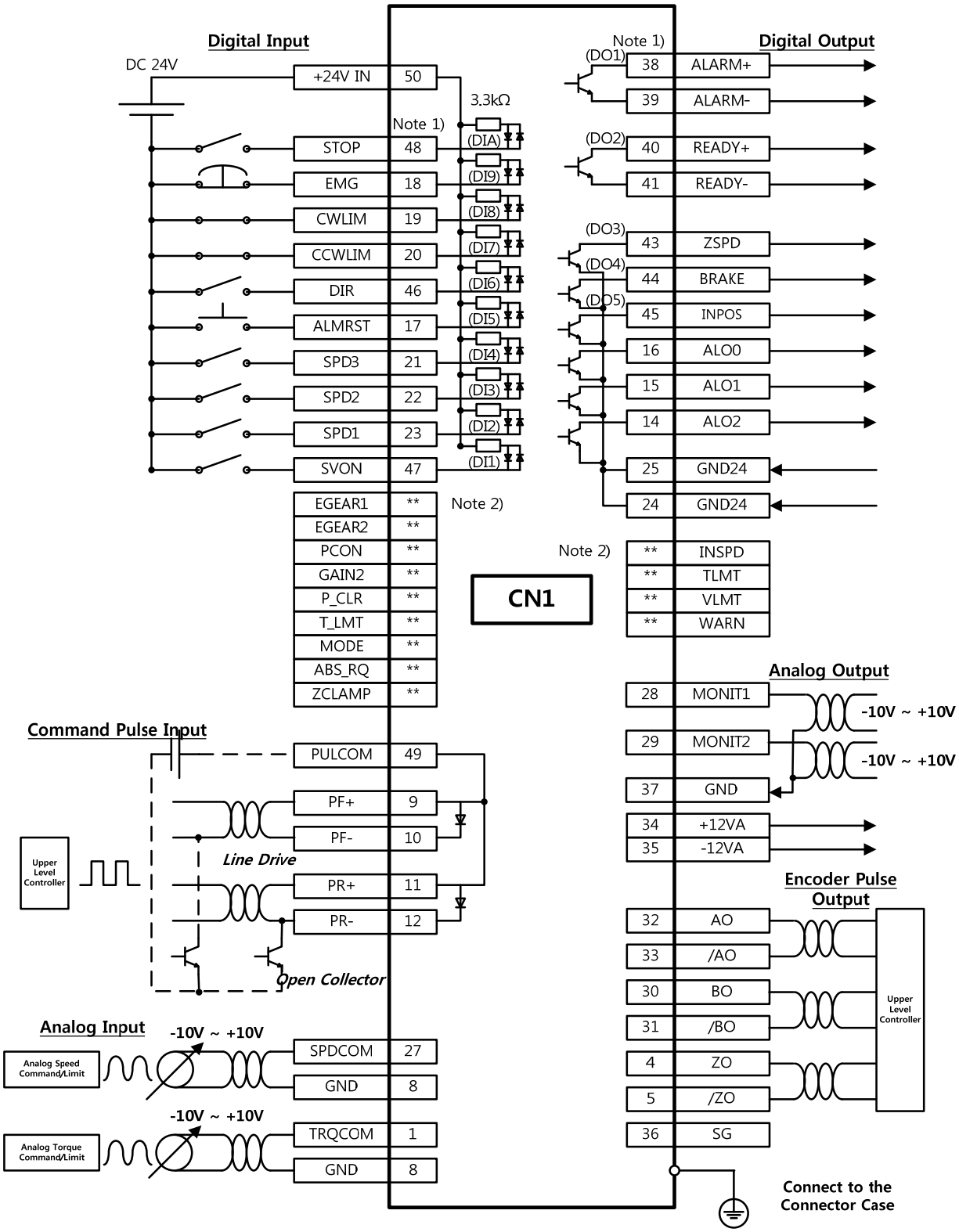


Note 1) The input signals (DI1 - DIA) and output signals (DO1 - DO5) are the factory default signals.
Note 2) ** You can change the allocations for unallocated signals with the parameter settings.
Refer to sections 4.1.6, "External Input Signals and Logic Definitions," and 4.1.8, "External Output Signals and Logic Definitions," for more information.

# 1.2.3 Example of Location Drive Mode Wiring

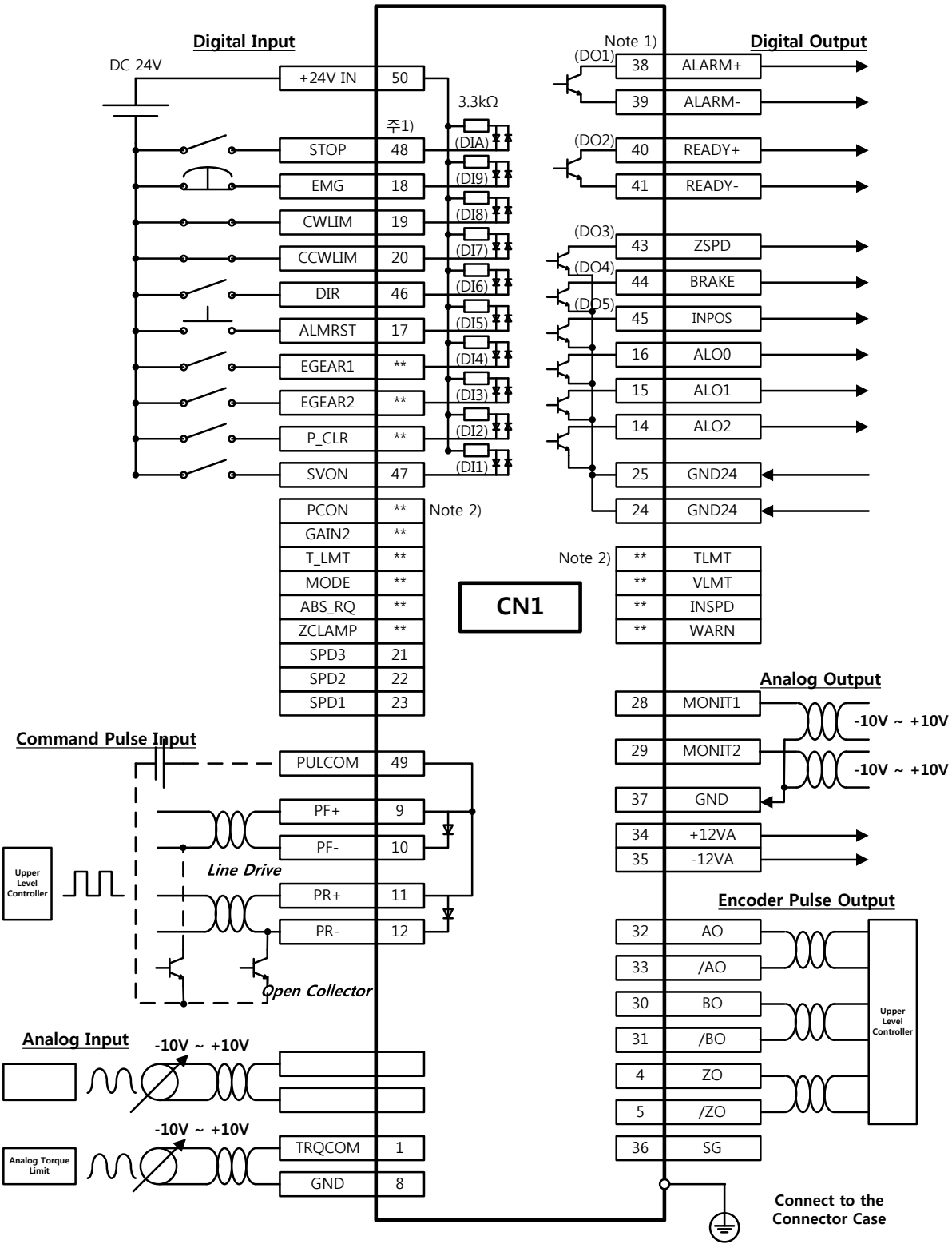


Note 1) The input signals (DI1 - DIA) and output signals (DO1 - DO5) are the factory default signals.
Note 2) ** You can change the allocations for unallocated signals with the parameter settings.
Refer to sections 4.1.6, "External Input Signals and Logic Definitions," and 4.1.8, "External Output Signals and Logic Definitions," for more information.

# 1.2.4 Example of Speed Drive Mode Wiring

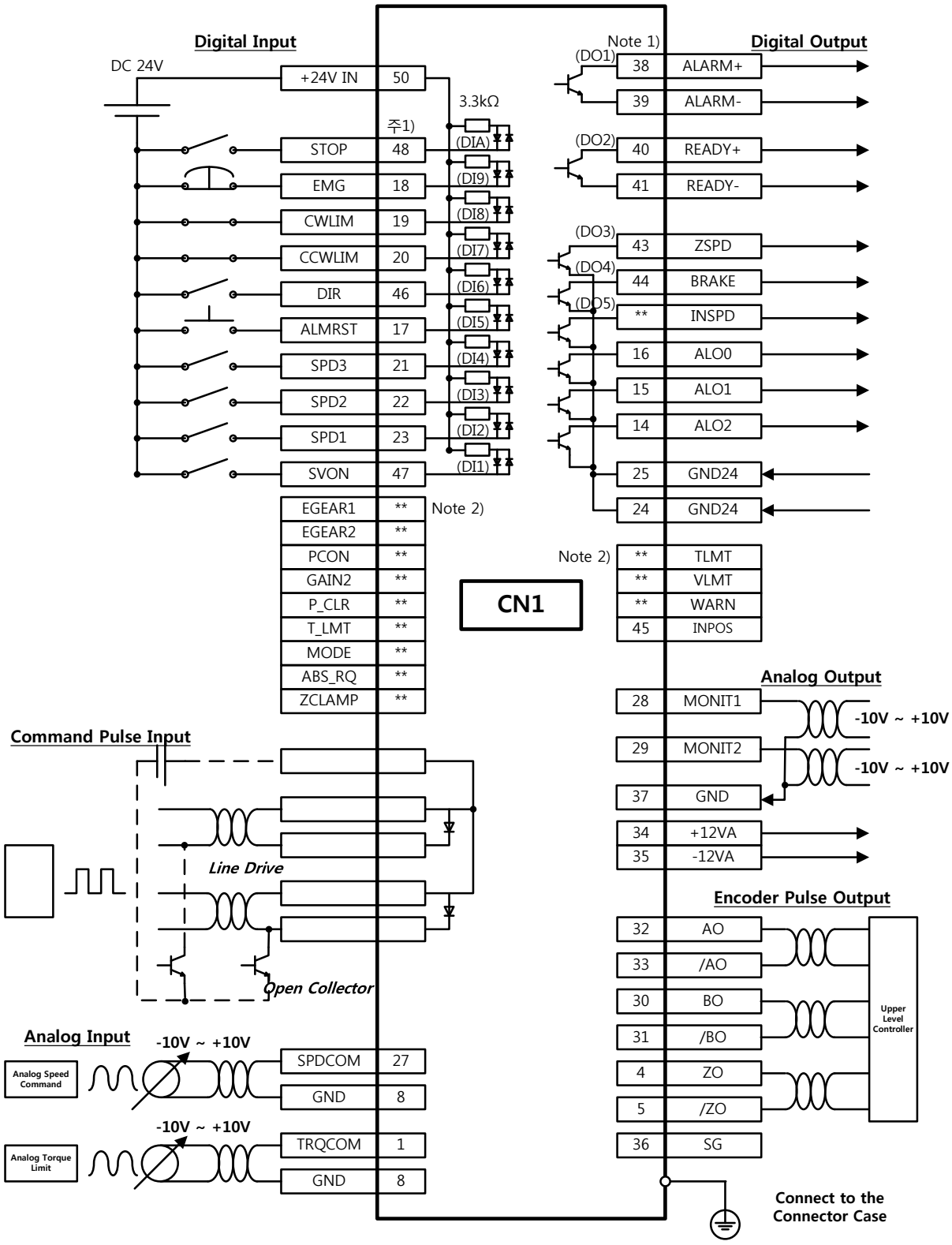


Note 1) The input signals (DI1 - DIA) and output signals (DO1 - DO5) are the factory default signals.
Note 2) ** You can change the allocations for unallocated signals with the parameter settings.
Refer to sections 4.1.6, "External Input Signals and Logic Definitions," and 4.1.8, "External Output Signals and Logic Definitions," for more information.

# 1.2.5 Example of Torque Drive Mode Wiring

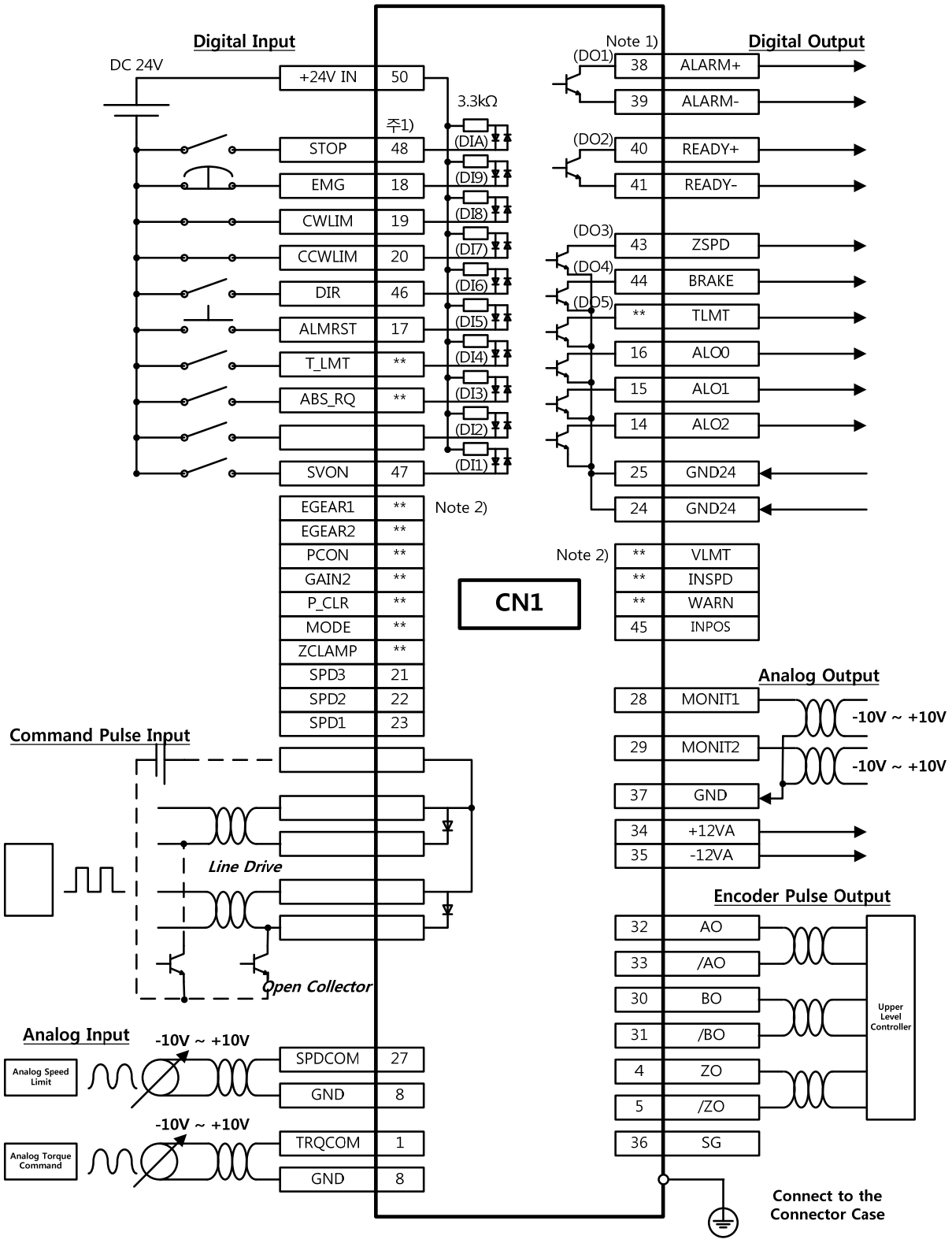


Note 1) The input signals (DI1 - DIA) and output signals (DO1 - DO5) are the factory default signals.
Note 2) ** You can change the allocations for unallocated signals with the parameter settings.
Refer to sections 4.1.6, "External Input Signals and Logic Definitions," and 4.1.8, "External Output Signals and Logic Definitions," for more information.

# 1.2.6 Example of Speed/Location Drive Mode Wiring

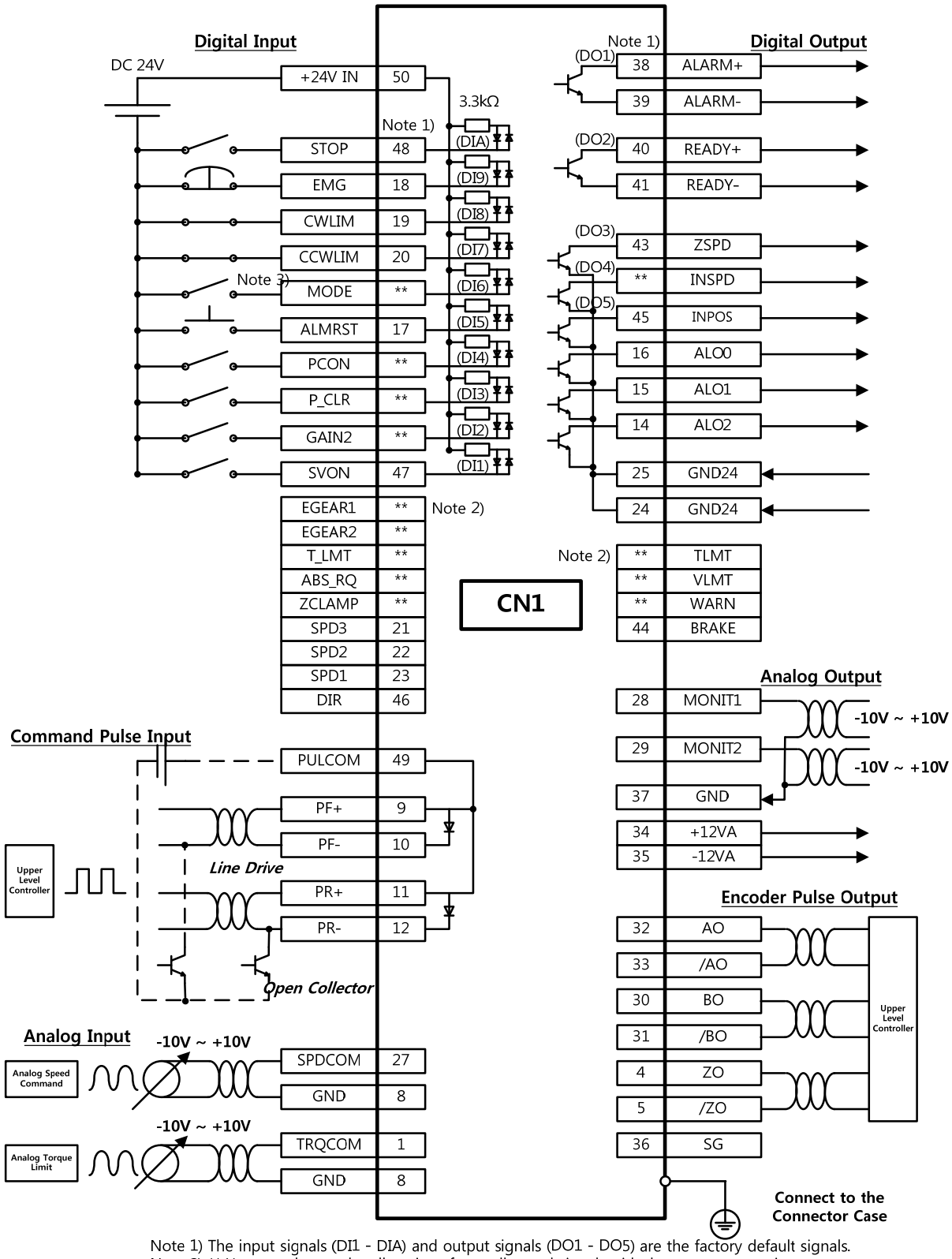


Note 1) The input signals (DI1 - DIA) and output signals (DO1 - DO5) are the factory default signals.
Note 2) ** You can change the allocations for unallocated signals with the parameter settings.
Refer to sections 4.1.6, "External Input Signals and Logic Definitions," and 4.1.8, "External Output Signals and Logic Definitions," for more information.
Note 3) Input Contact Mode = ON: Speed Control Mode, Mode = OFF: Position Operation Mode

# 1.2.7 Example of Speed/Torque Drive Mode Wiring

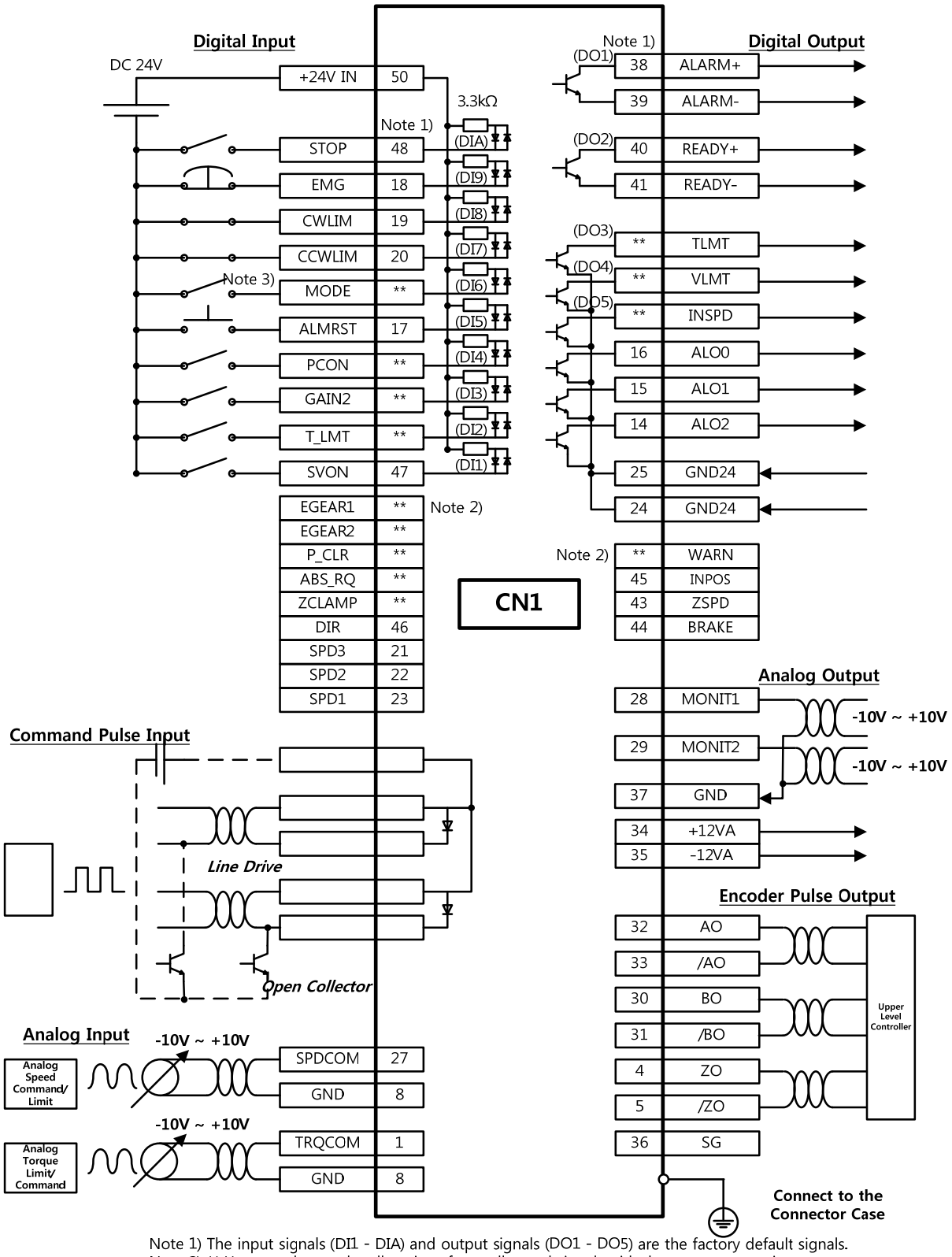


Note 1) The input signals (DI1 - DIA) and output signals (DO1 - DO5) are the factory default signals.
Note 2) ** You can change the allocations for unallocated signals with the parameter settings.
Refer to sections 4.1.6, "External Input Signals and Logic Definitions," and 4.1.8, "External Output Signals and Logic Definitions," for more information.
Note 3) Input Contact Mode = ON: Speed Control Mode, Mode = OFF: Torque Operation Mode

# 1.2.8 Example of Location/Torque Drive Mode Wiring

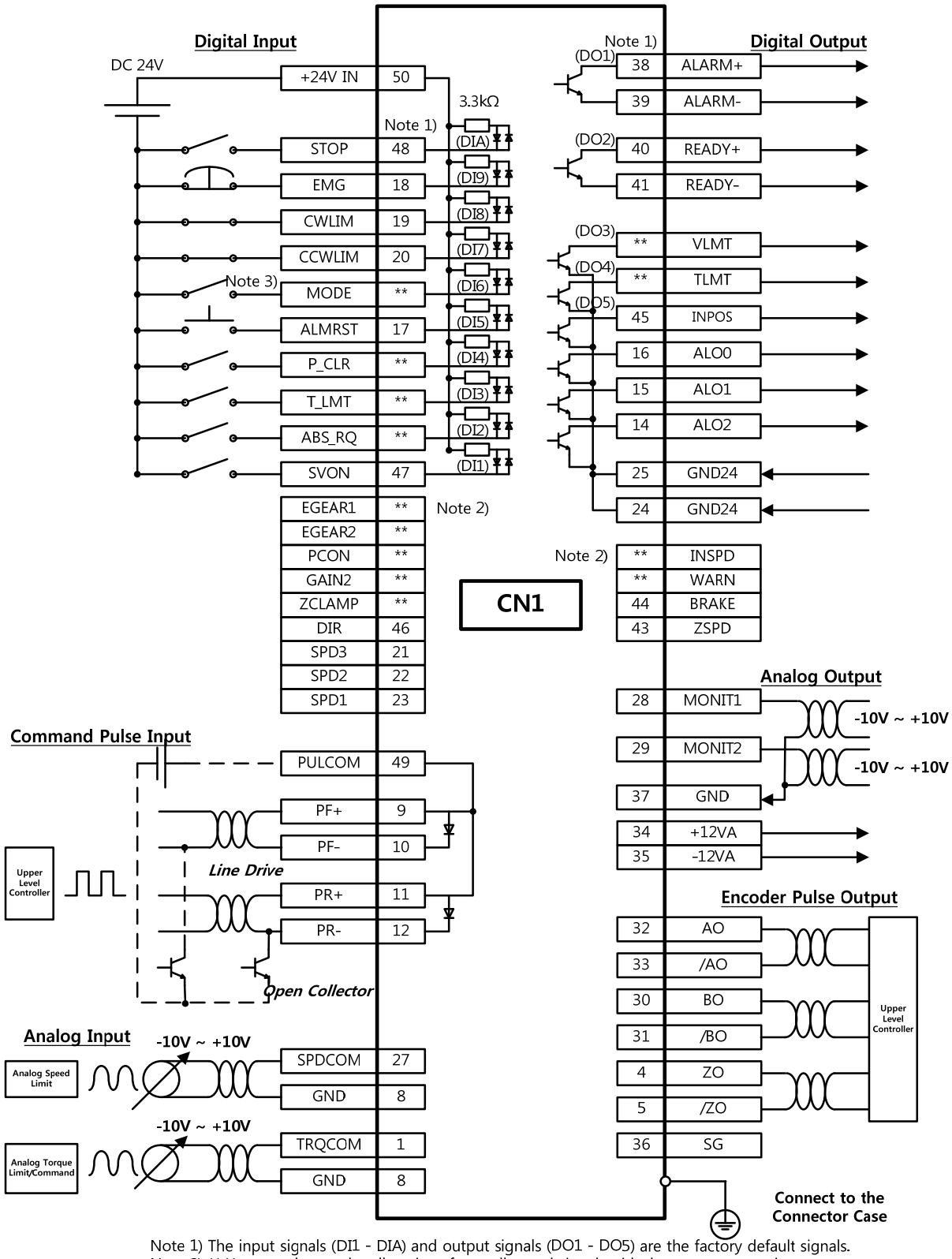


Note 1) The input signals (DI1 - DIA) and output signals (DO1 - DO5) are the factory default signals.
Note 2) ** You can change the allocations for unallocated signals with the parameter settings.
Refer to sections 4.1.6, "External Input Signals and Logic Definitions," and 4.1.8, "External Output Signals and Logic Definitions," for more information.
Note 3) Input Contact Mode = ON: Position Control Mode, Mode = OFF: Torque Operation Mode

# 1.3 Signals

## 1.3.1 Digital Input Contact Signal

| Default pin number | name | Details | Applicable Modes | | | | | |
|---|---|---|---|---|---|---|---|---|
| | | | Position | Speed | Torque | Speed /Location | Speed /Torque | Position /Torque |
| 50 | +24 V IN | Input contact +24 V power | O | O | O | O | O | O |
| 47 | SVON | Servo ON | O | O | O | O | O | O |
| 23 | SPD1 | Multi-speed 1 | X | O | X | O/X | O/X | X |
| 22 | SPD2 | Multi-speed 2 | X | O | X | O/X | O/X | X |
| 21 | SPD3 | Multi-speed 3 | X | O | X | O/X | O/X | X |
| 17 | ALMRST | Reset upon alarm | O | O | O | O | O | O |
| 46 | DIR | Select rotation direction | O | O | O | O | O | O |
| 20 | CCWLMT | Counter-clockwise limit | O | O | O | O | O | O |
| 19 | CWLMT | Clockwise limit | O | O | O | O | O | O |
| 18 | EMG | Emergency stop | O | O | O | O | O | O |
| 48 | STOP | Stop | O | O | O | O | O | O |
| assignment | EGEAR1 | Electronic gear ratio 1 | O | X | X | X/O | X | O/X |
| assignment | EGEAR2 | Electronic gear ratio 2 | O | X | X | X/O | X | O/X |
| assignment | PCON | P control action | O | O | X | O | O/X | O/X |
| assignment | GAIN2 | Select gain 2 | O | O | X | O | O/X | O/X |
| assignment | P_CLR | Input pulse clear | O | X | X | X/O | X | O/X |
| assignment | T_LMT | Control torque with TRQCOM | O | O | O | O | O | O |
| assignment | MODE | Change operation modes | X | X | X | O | O | O |
| assignment | ABS_RQ | Request absolute location data | O | O | O | O | O | O |
| assignment | ZCLAMP | Zero clamp | X | O | X | O/X | O/X | O |

## 1.3.2 Analog Input Contact Signal

| Pin Number | name | Details | Applicable Modes | | | | | |
|---|---|---|---|---|---|---|---|---|
| | | | Position | Speed | Torque | Speed /Location | Speed /Torque | Position /Torque |
| 27 | SPDCOM | Analog speed command (-10-+10 V) | X | O | X | O/X | O/X | X |
| | | Analog Speed Limit (-10-+10 V) | X | X | O | X | X/O | X/O |
| 1 | TRQCOM | Analog Torque Command (-10-+10 V) | X | X | O | X | X/O | X/O |
| | | Analog torque limit (-10-+10 V) | O | O | X | O | O/X | O/X |
| 8<br>37 | GND | Ground for analog signals | O | O | O | O | O | O |

## 1.3.3 Digital Output Contact Signal

| Default pin number | name | Details | Applicable Modes | | | | | |
|---|---|---|---|---|---|---|---|---|
| | | | Position | Speed | Torque | Speed /Location | Speed /Torque | Position /Torque |
| 16 | ALO0 | Alarm group contact output 1 | O | O | O | O | O | O |
| 15 | ALO1 | Alarm group contact output 2 | O | O | O | O | O | O |
| 14 | ALO2 | Alarm group contact output 3 | O | O | O | O | O | O |
| 38 / 39 | ALARM +/- | Alarm | O | O | O | O | O | O |
| 40 / 41 | READY +/- | Ready for operation | O | O | O | O | O | O |
| 43 | ZSPD | Zero speed reached | O | O | O | O | O | O |
| 44 | BRAKE | Brake | O | O | O | O | O | O |
| 45 | INPOS | Location reached | O | X | X | X/O | X | O/X |
| assignment | TLMT | Torque limit | O | O | O | O | O | O |
| assignment | VLMT | Speed limit | O | O | O | O | O | O |
| assignment | INSPD | Speed reached | X | O | X | O/X | O/X | X |
| assignment | WARN | Warning | O | O | O | O | O | O |
| 24<br>25 | GND24 | Input/output contact<br>Ground of drive power (24 V) | O | O | O | O | O | O |

## 1.3.4 Monitor Output Signal and Output Power

| Pin Number | name | Details | Applicable Modes | | | | | |
|---|---|---|---|---|---|---|---|---|
| | | | Position | Speed | Torque | Speed /Location | Speed /Torque | Position /Torque |
| 28 | MONIT1 | Analog monitor output 1 (-10-+10 V) | O | O | O | O | O | O |
| 29 | MONIT2 | Analog monitor output 2 (-10-+10 V) | O | O | O | O | O | O |
| 8<br>37 | GND | Ground for analog signals | O | O | O | O | O | O |
| 34 | +12V | Terminal for +12 V power output | O | O | O | O | O | O |
| 35 | -12V | Terminal for -12 V power output | O | O | O | O | O | O |

## 1.3.5 Pulse Train Input Signal

### ■ Line Drive (5 V)

| Pin Number | name | Details | Applicable Modes | | | | | |
|---|---|---|---|---|---|---|---|---|
| | | | Position | Speed | Torque | Speed /Location | Speed /Torque | Position /Torque |
| 9 | PF+ | F+ pulse input | O | X | X | X/O | X | O/X |
| 10 | PF- | F- pulse input | O | X | X | X/O | X | O/X |
| 11 | PR+ | R+ pulse input | O | X | X | X/O | X | O/X |
| 12 | PR- | R- pulse input | O | X | X | X/O | X | O/X |
| 49 | PULCOM | Not for use | X | X | X | X | X | X |

### ■ Open Collector (24 V)

| Pin Number | name | Details | Applicable Modes | | | | | |
|---|---|---|---|---|---|---|---|---|
| | | | Position | Speed | Torque | Speed /Location | Speed /Torque | Position /Torque |
| 9 | PF+ | Not for use | X | X | X | X | X | X |
| 10 | PF- | F pulse input | O | X | X | X/O | X | O/X |
| 11 | PR+ | Not for use | X | X | X | X | X | X |
| 12 | PR- | R pulse input | O | X | X | X/O | X | O/X |
| 49 | PULCOM | +24 V power input | O | X | X | X/O | X | O/X |

## 1.3.6 Encoder Output Signal

| Pin Number | name | Details | Applicable Modes | | | | | |
|---|---|---|---|---|---|---|---|---|
| | | | Position | Speed | Torque | Speed /Location | Speed /Torque | Position /Torque |
| 32<br>33<br>30<br>31 | AO<br>/AO<br>BO<br>/BO | Outputs encoder signals received from the motor as signals pre-scaled according to the ratio defined by [P0-14]/[P0-15]. (5 V line drive method) | O | O | O | O | O | O |
| 4<br>5 | ZO<br>/ZO | Outputs encoder Z signals received from the motor.<br>(5 V line drive method) | O | O | O | O | O | O |

# 2. Installation

## 2.1 Servo motor

### 2.1.1 Operating Environment

| Item | Requirements | Notes |
|---|---|---|
| Ambient temperature | 0 ~ 40[℃] | Consult with our technical support team to customize the product if temperatures in the installation environment are outside this range. |
| Ambient humidity | 80% RH or lower | Do not operate this device in an environment with steam. |
| External vibration | Vibration acceleration 19.6 ㎨ or below on both the X and Y axis. | Excessive vibrations reduce the lifespan of the bearings. |

*** Products in this manual have been passed the standards(EN 60034-1) for Industrial purpose(Class A), so they are eligible to use in industrial environment.**

### 2.1.2 Preventing Impact

Impact to the motor during installation or handling may damage the encoder.

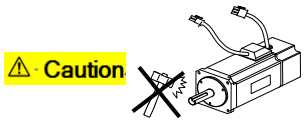


### 2.1.3 Motor Connection

- The motor might burn out if it is connected directly to commercial power.
  Always connect the motor via the specified drive.
- Connect the ground terminals of the motor to either of the two ground terminals inside the drive, and attach the remaining terminal to the type-3 ground.

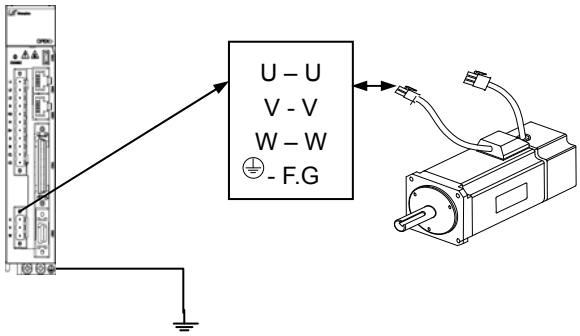


- Connect the U, V, and W terminals of the motor in the same way as the U, V, and W terminals of the drive.

- Ensure that the pins on the motor connector are securely attached.
- In order to protect against moisture or condensation in the motor, make sure that insulation resistance is 10 ㏁ (500 V) or higher before installation.

## 2.1.4 The Load Device Connection

For coupling connections: Ensure that the motor shaft and load shaft are aligned within the tolerance range.

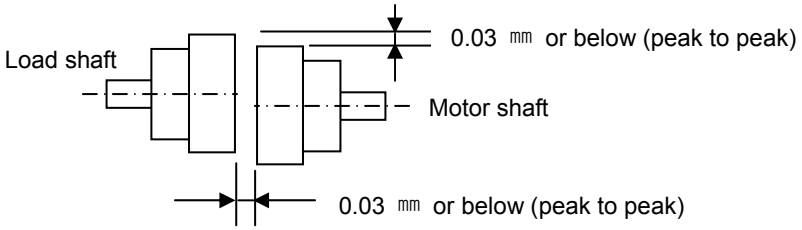


### ■ For pulley connections:

| Flange | Lateral Load | | Axial Load | | Notes |
|---|---|---|---|---|---|
| | N | kgf | N | kgf | |
| 40 | 148 | 15 | 39 | 4 | 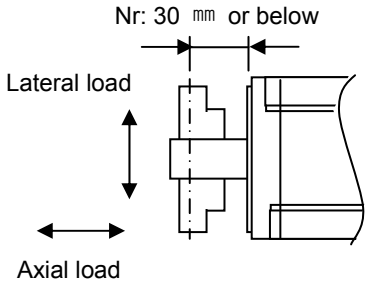 |
| 60 | 206 | 21 | 69 | 7 | |
| 80 | 255 | 26 | 98 | 10 | |
| 130 | 725 | 74 | 362 | 37 | |
| 180 | 1548 | 158 | 519 | 53 | |
| 220 | 1850 | 189 | 781 | 90 | |



## 2.1.5 Cable Installation

- For vertical installations, make sure that no oil or water flows into the connecting parts.

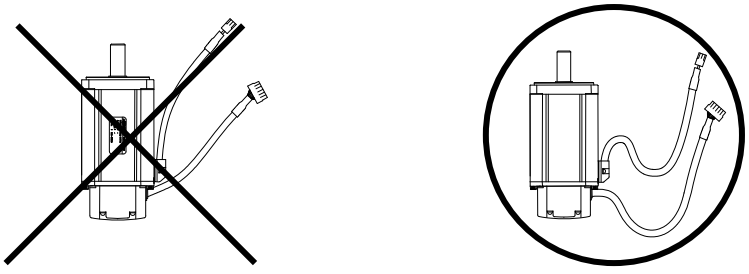

- Do not apply pressure to or damage the cables.

  Use robot cables to prevent swaying when the motor moves.

# 2.2 Servo drive

## 2.2.1 Operating Environment

| Item | Environmental conditions | Notes |
|---|---|---|
| Ambient temperature | 0～50[℃] | ⚠ **Caution**<br>Install a cooling fan on the control panel to maintain an appropriate temperature. |
| Ambient humidity | 90% RH or lower | ⚠ **Caution**<br>Condensation or moisture may develop inside the drive during prolonged periods of inactivity and damage it.<br>Remove all moisture before operating the drive after a prolonged period of inactivity. |
| External vibration | Vibration acceleration 4.9 ㎨ or lower | Excessive vibration reduces the lifespan of the machine and may cause malfunctions. |
| Ambient conditions | ▪ Do not expose the device to direct sunlight.<br>▪ Do not expose the device to corrosive or combustible gases.<br>▪ Do not expose the device to oil or dust.<br>▪ Ensure that the device receives sufficient ventilation. | |

## 2.2.2 Wiring the Control Panel

Comply with the spacing specified in the following figures when installing the control panel.

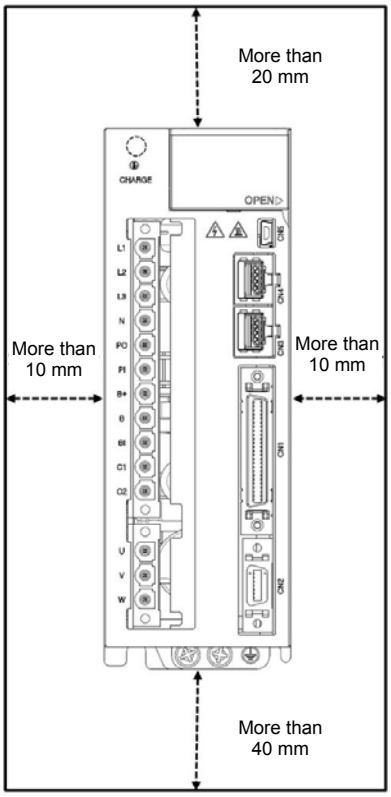


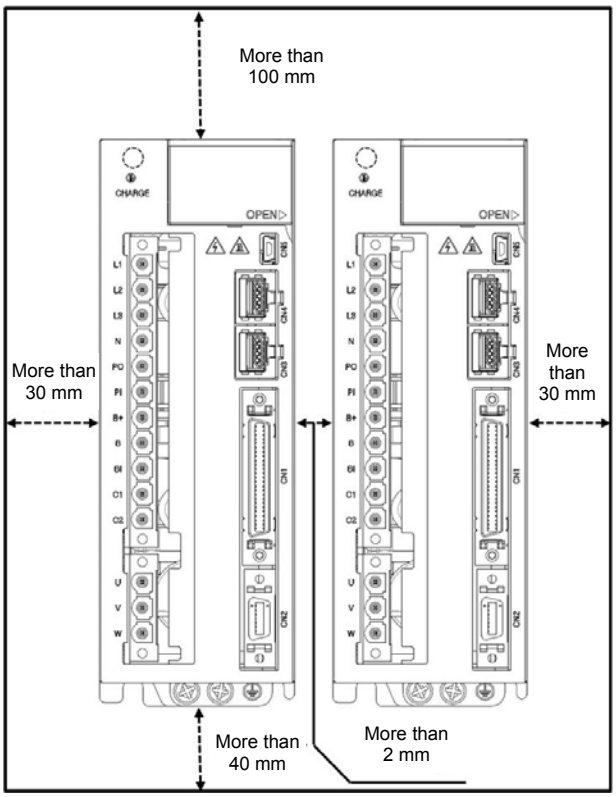


**⚠ Caution**

- Ensure that during installation the heat from the external regenerative resistor does not affect the drive.
- Ensure that the servo drive control panel is flat against the wall during installation.
- Ensure that the metal powder from drilling does not enter the drive when assembling the control panel.
- Ensure that oil, water, and metal dust do not enter the drive through gaps in the casing.
- Protect the control panel by spraying compressed air in areas which accumulate harmful gases or dust.

## 2.2.3 Power Supply Wiring

- Ensure that the input power voltage is within the acceptable range.

| ⚠ Caution |
| --- |
| Overvoltages can damage the drive. |

- Connecting commercial power to the U, V and W terminals of the drive may damage the drive. Always supply power via the L1, L2 and L3 terminals.
- When using an internal regenerative resistor, connect short-circuit pins to the B and BI terminals. For external regenerative resistors, remove the short-circuit pins and use standard resistors for the B+ and B terminals.

| Model | Resistance value | Standard Capacity | * Notes |
| --- | --- | --- | --- |
| XDL-L7SB010□ | 100 Ω | Built-in 100 W | ⚠ **Caution**<br>For information about resistance during regenerative capacity expansion, refer to Section 7.3, "Optional and Peripheral Devices." |
| XDL-L7SB020□ | 40 Ω | Built-in 150 W | |
| XDL-L7SB035□ | 40 Ω | Built-in 150 W | |
| XDL-L7SB050□ | 27Ω | Built-in 120 W | |
| XDL-L7SB075□ | 27 Ω | Built-in 240 W | |
| XDL-L7SB150□ | 13.4 Ω | External 2000 W | |

- Configure the system so that the main power (L1, L2, L3) is supplied after the control power (C1, C2). (Refer to Chapter 3, "Wiring.")
- High voltages may remain in the device for sometime even after the main power is disconnected.

| ⚠ Warning |
| --- |
| After disconnecting the main power, ensure that the charge lamp is off before you start wiring. Failure to do so may result in electric shock. |

- Always ground the device over the shortest possible distance.
  Long ground wires are susceptible to noise which may cause the device to malfunction.

# 3. Wiring

## 3.1 Internal Diagram

### 3.1.1 XDL-L7 Drive Block Diagram [XDL-L7SB010□ - XDL-L7SB035□]

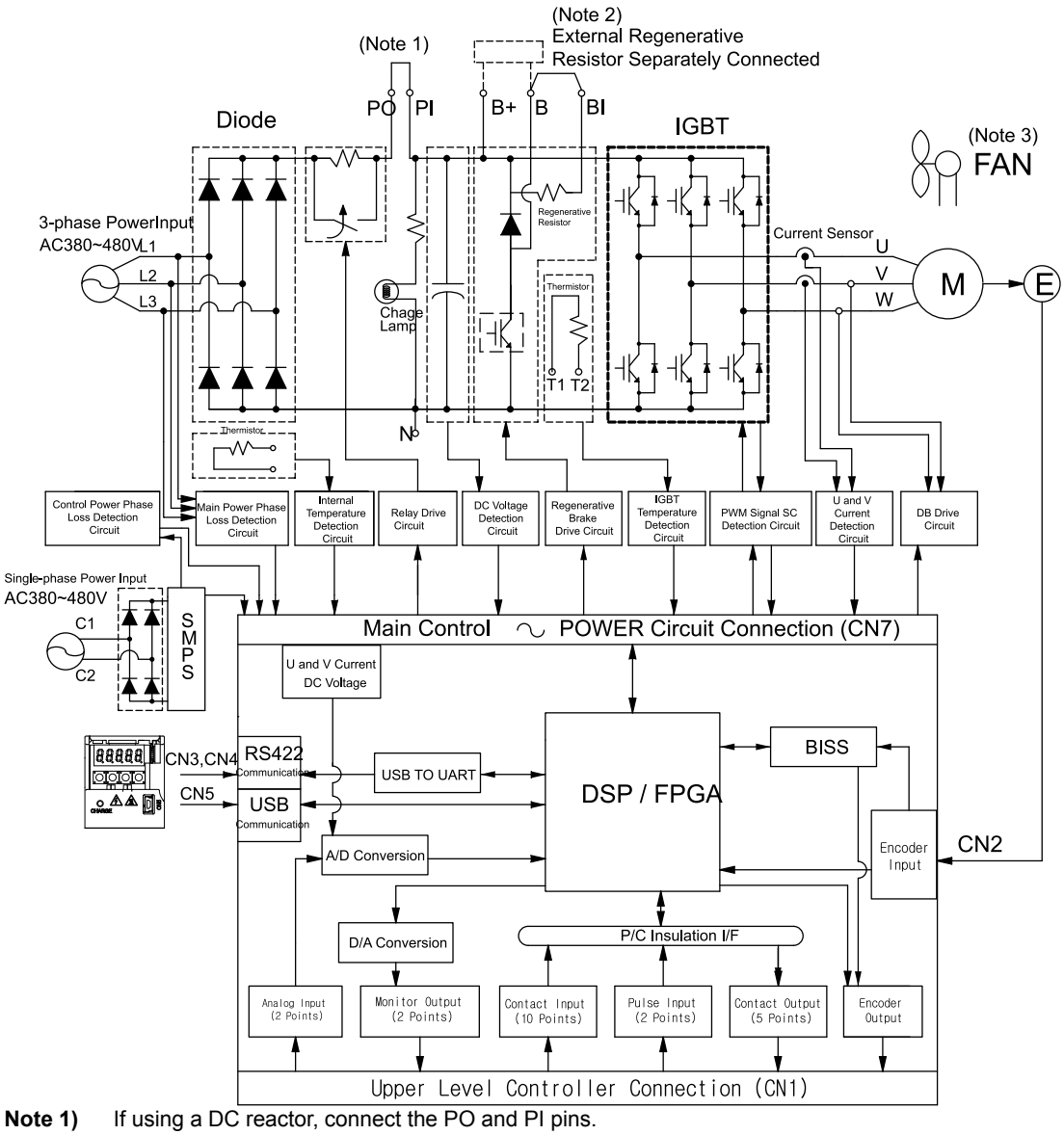


**Note 1)** If using a DC reactor, connect the PO and PI pins.
**Note 2)** If using an external regenerative resistor, remove the B and BI short-circuit pins and connect the B+ and B pins.
**Note 3)** Models ranging from XDL-L7SB010□ to XDL-L7SB035□ are cooled by a DC 24 V cooling fan.

## 3.1.2 XDL-L7 Drive Block Diagram [XDL-L7SB050□ - XDL-L7SB075□]

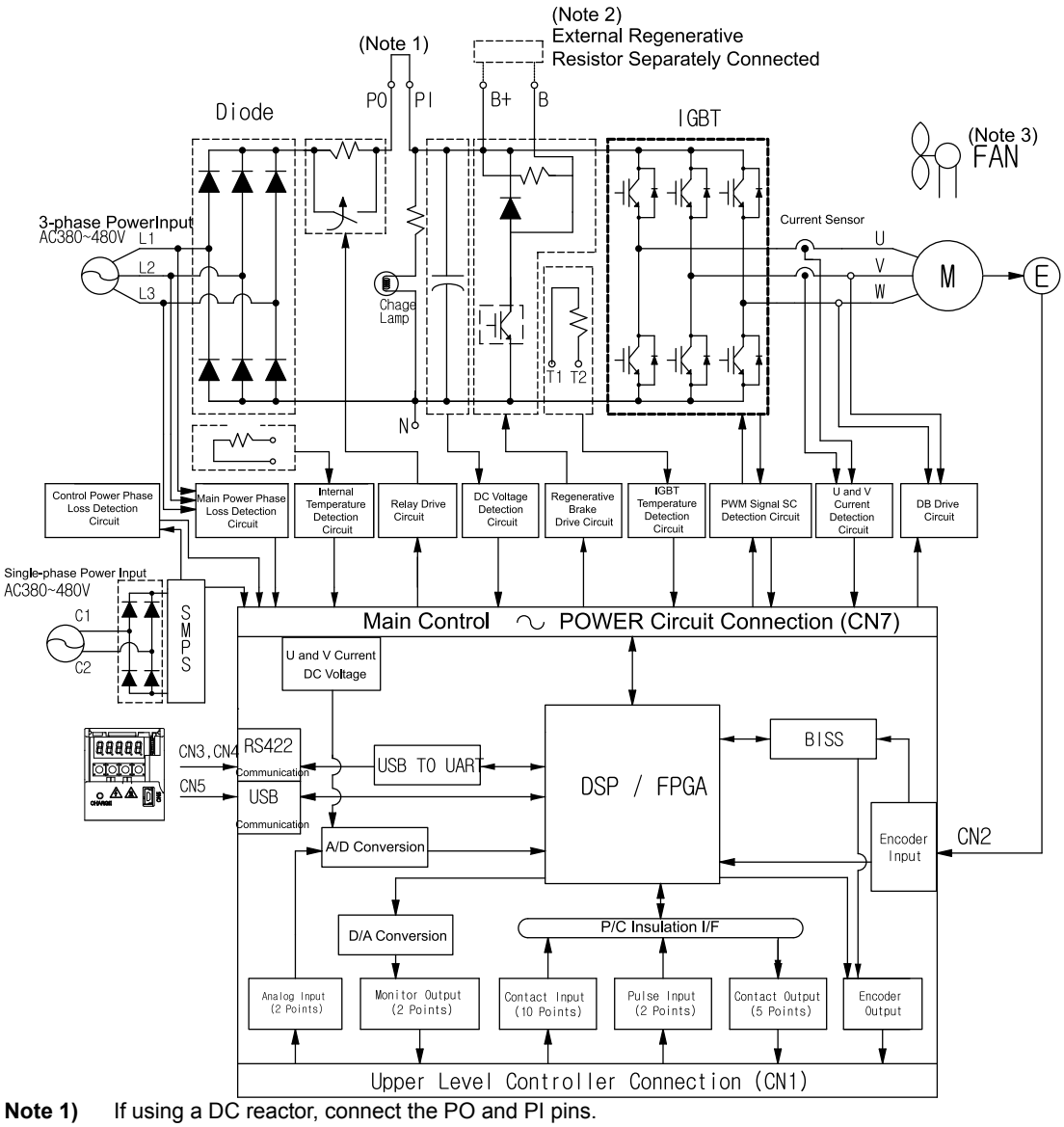


**Note 1)** If using a DC reactor, connect the PO and PI pins.

**Note 2)** If using an external regenerative resistor, attach the wiring of internal resistance to mounting hole "NC" for internal resistance of the case. Then, connect external regenerative resistance to B+ and B terminals.

**Note 3)** Models ranging from XDL-L7SB050□ to XDL-L7SB075□ are cooled by a DC 24 V cooling fan.

# 3.1.3 XDL-L7 Drive Block Diagram [XDL-L7SB150□]

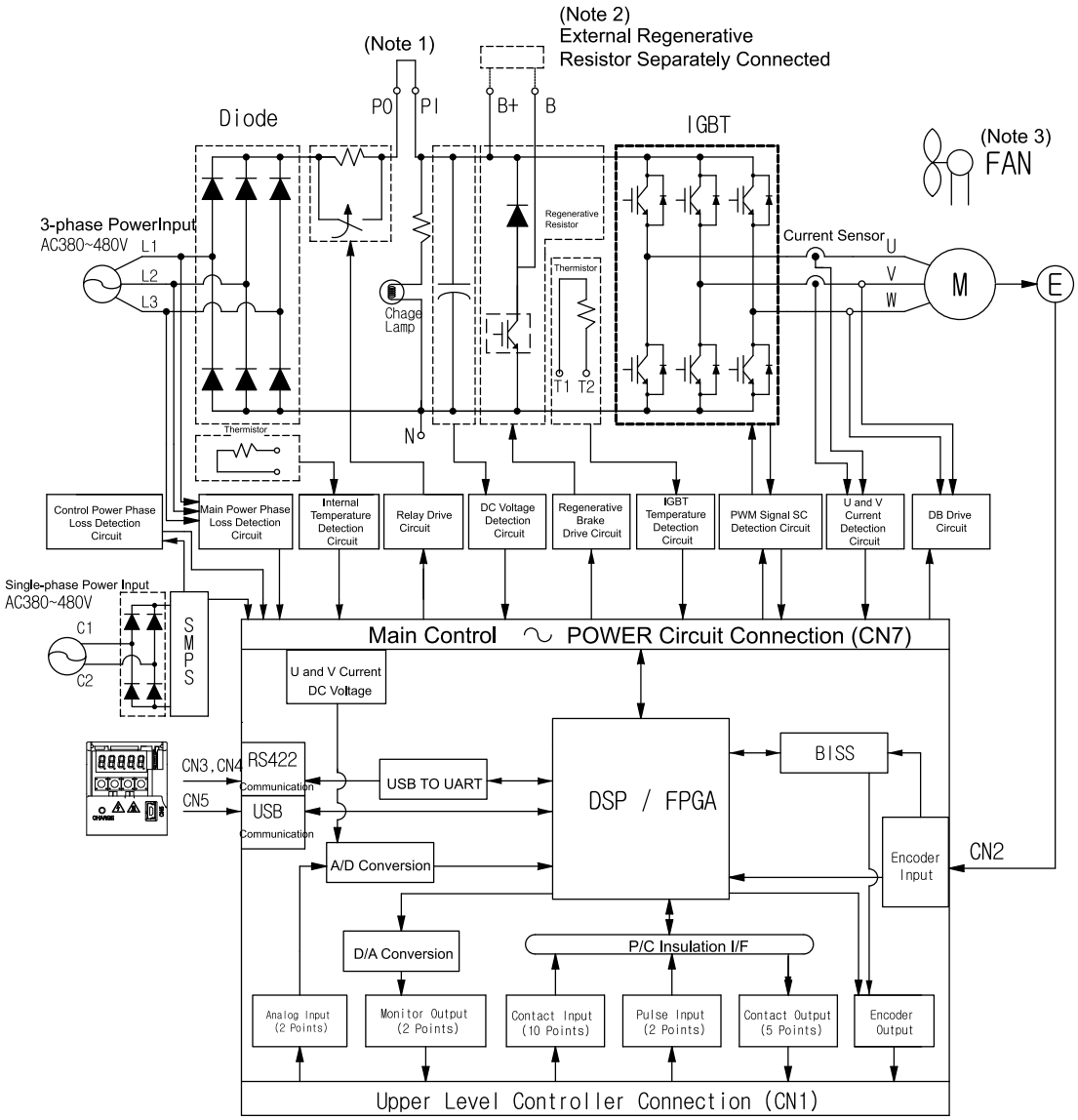


**Note 1)** If using a DC reactor, connect the PO and PI pins.

**Note 2)** XDL-L7SB150□ model has no internal regenerative resistance. By default, use external regenerative resistance. When attaching the resistance, connect it to B+, and B terminals.

**Note 3)** XDL-L7SB150□ Model is cooled by a DC 24 V cooling fan.

# 3.2 Power Supply Wiring

## 3.2.1 XDL-L7 Drive Wiring Diagram [XDL-L7SB010□ - XDL-L7SB035□]

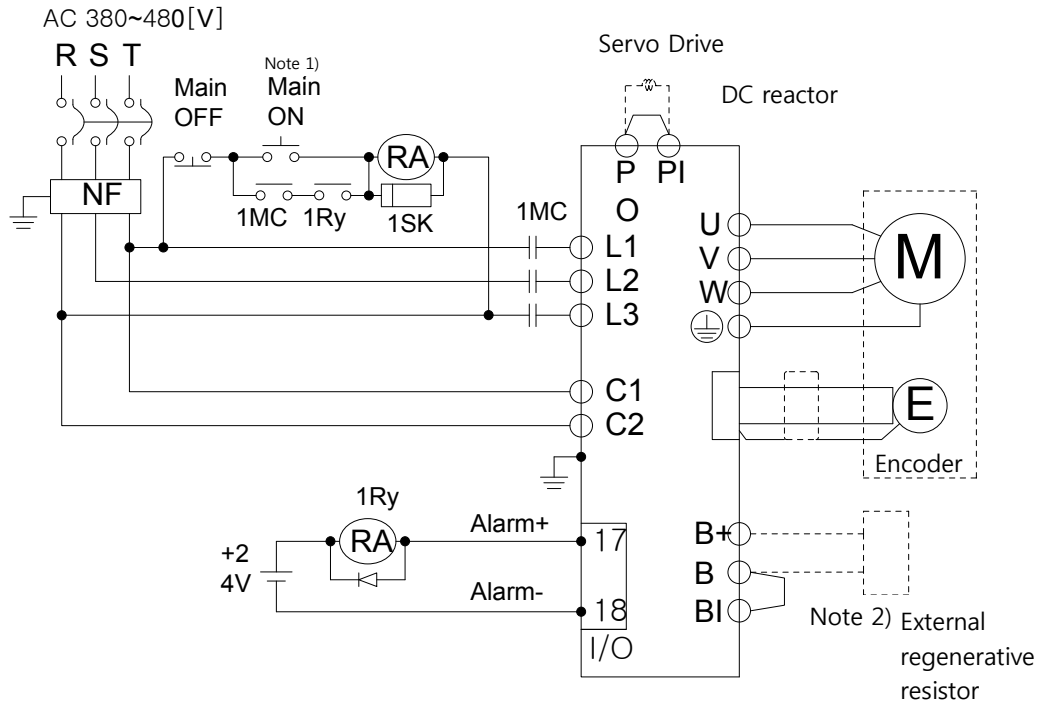


**Note 1)** It takes approximately one to two seconds until alarm signal is output after you turn on the main power. Accordingly, push and hold the main power ON switch for at least two seconds.

**Note 2)** Short-circuit B and BI terminals before use, because XDL-L7SB010□ (100 W, 100 Ω) and XDL-L7SB035□ (150 W, 40 Ω) have internal regenerative resistance. If the regenerative capacity is high because of frequent acceleration and deceleration, open the short-circuit pins (B , BI) and connect an external regenerative resistor to B and B+.

**Note 3)** Remove approximately 7-10 ㎜ of the sheathing from the cables for the main circuit power and attach crimp terminals. (Refer to Section 3.2.2, "Power Circuit Electrical Components.")

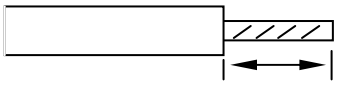

**Note 4)** Use a (-) flathead screwdriver to connect or remove the main circuit power unit wiring.

## 3.2.2 XDL-L7 Drive Wiring Diagram [XDL-L7SB050□ - XDL-L7SB075□]

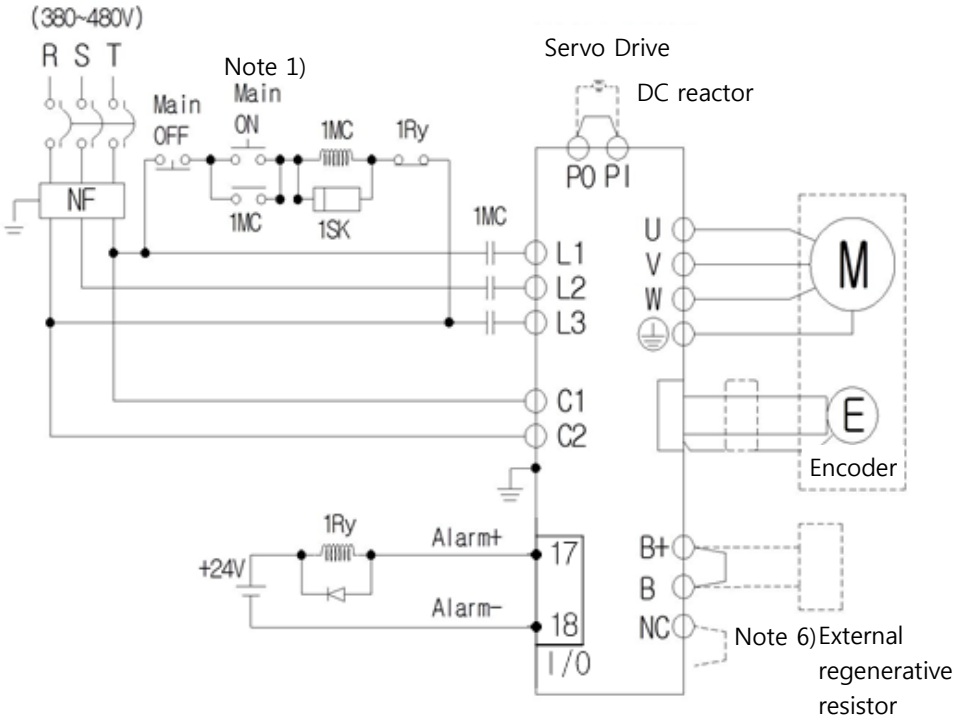


## 3.2.3 XDL-L7 Drive Wiring Diagram [XDL-L7SB150□]

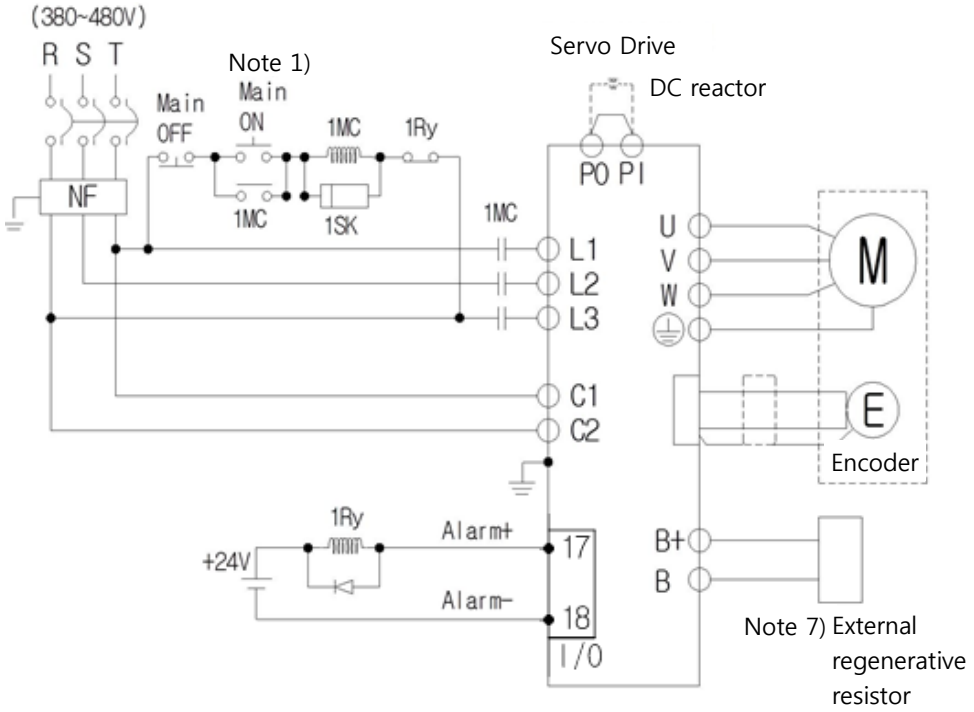

**Note 1)** It takes approximately one to two seconds until alarm signal is output after you turn on the main power. Accordingly, push and hold the main power ON switch for at least two seconds.

**Note 2)** Short-circuit B and BI terminals before use, because XDL-L7SB075□ (120 W, 27 Ω) has internal regenerative resistance. If the regenerative capacity is high because of frequent acceleration and deceleration, attach the short-circuit pins (B+, B) to NC terminal and connect an external regenerative resistor to B+ and B before use.

**Note 3)** By default, use external regenerative resistance for XDL-L7SB150□ (2000 W, 13.4 Ω), and short-circuit B+ and B terminals before use.

**Note 4)** For the cables for the main circuit and control power unit, you must use crimp terminals compliant with electrical component standards (XDL-L7-075 : GP110028_KET, XDL-L7-150 : GP110732_KET).
(Refer to Section 3.2.3, "Power Circuit Electrical Components.")

**Note 5)** Both XDL-L7-075 and XDL-L7-150 use terminal block, so use (+) and (-) screwdriver to connect or remove the terminals.

# 3.2.4 Power Circuit Electrical Components

| Name | | XDL-L7SB010□ | XDL-L7SB020□ | XDL-L7SB035□ | XDL-L7SB050□ | XDL-L7SB075□ | XDL-L7SB150□ |
|---|---|---|---|---|---|---|---|
| MCCB | | 30A Frame 10A (ABE33b/10) | 30A Frame 20A (ABE33b/20) | | 30A Frame 30A (ABE33b/30) | 30A Frame 30A (ABE33b/30) | 50A Frame 50A (ABE53b/50) |
| Noise Filter (NF) | | TB6-B010LBEI (10A) | TB6-B020NBDC (20A) | | TB6-B030NBDC (30A) | TB6-B040A (40A) | TB6-B060LA (60A) |
| DC reactor | | 10 A | 20 A | | 30A | 30 A | 50 A |
| MC | | 9A / 550V (GM□-12) | 18A / 550V (GM□-22) | | 26A / 550V (GM□-40) | 26A / 550V (GM□-40) | 38A / 550V (GM□-50) |
| Wire Note 1) | L1, L2 ,L3 PO, PI, N B+, B U, V, W | AWG14 (2.08 ㎟) | | | AWG10 (5.5 ㎟) | | AWG8 (8.0 ㎟) |
| | C1, C2 | AWG14 (2.08 ㎟) | | | | | |
| Crimp terminal | | UA-F4010, SEOIL (10 mm Strip & Twist) | | | GP110028 KET | GP110028 KET | GP110732 KET |
| Regenerative resistor (Default) | | 100 W 100 Ω | 150 W 40 Ω | | 120 W 27 Ω | 240 W 27 Ω | |
| Connector (Default) | | BLZ 7.62HP/3/180LR SN OR BX SO<br>BLZ 7.62HP/11/180LR SN OR BX SO | | | | | |

Note 1)

- When you select a wire, please use 600V, PVC-insulated wire.
- To comply with UL(CSA) standards, use UL-certified wire (heat resistant temperature 75℃ or above).
- To comply with other standards, use proper wires that meet applicable standards.
- For other special specifications, use wires equivalent or superior to those in this section.

- **XDL-L7□B010□**

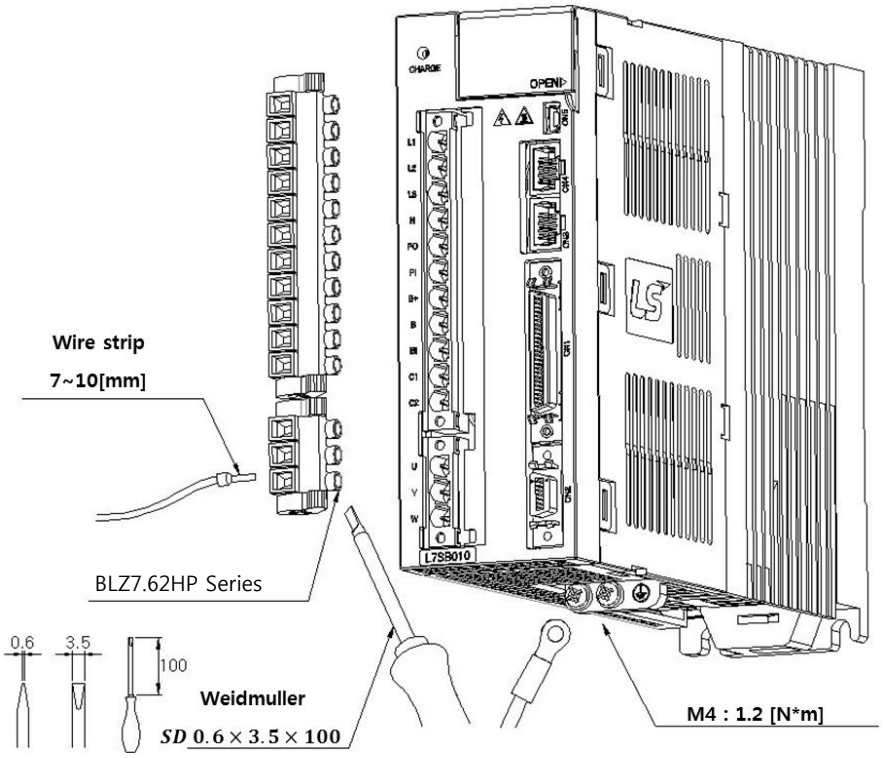


- **XDL-L7SB020□ / XDL-L7SB035□**

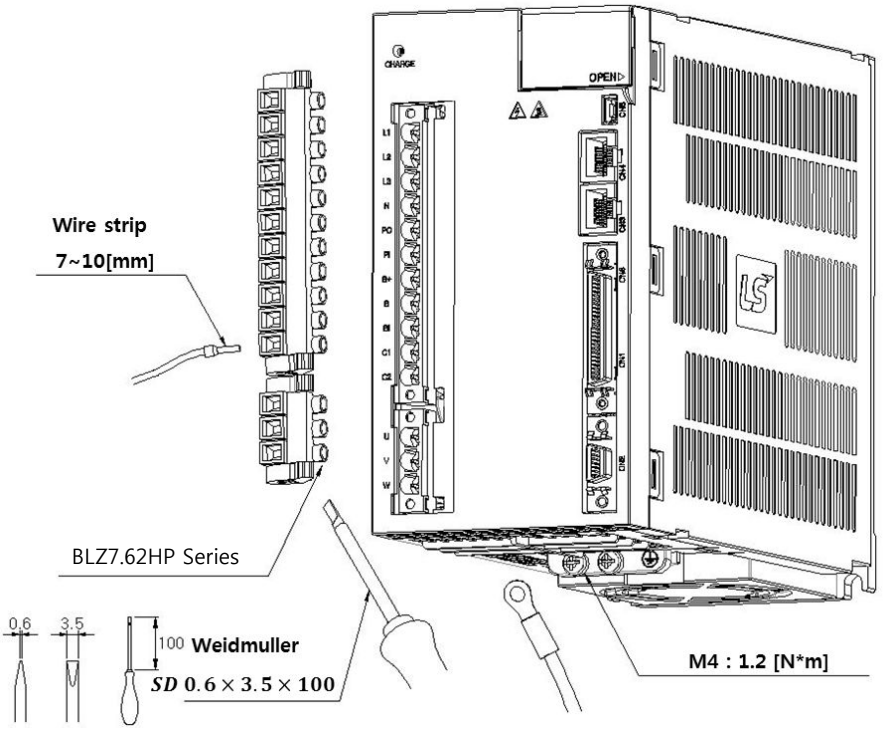

For information on wiring to BLZ7.62HP Series connector, refer to the above procedures.

1. Insert electric wire into insert hole with upper locking screw loosened, and use applicable flathead (-) driver for each model to fully tighten screw to 0.4-0.5 N·m.
2. Otherwise, insufficient torque of locking screw may cause vibration-induced disconnection, system malfunction and contact-induced fire accident.
3. After you connect a wire to connector, place the connector as closely to servo drive as possible and use both locking hooks to fully lock it.
4. Use FG locking screw of M4 size (shown in bottom of product) to tighten it to 1.2 N·m.
5. Insufficient torque of locking screw may cause FG contact failure and even malfunctioning drive.
6. Recommended (-) driver: Use Weidmuller flathead driver (SD 0.6×3.5×100).

Weidmuller

SD 0.6×3.5×100

M4: 1.2 N·m

- **XDL-L7□B050**

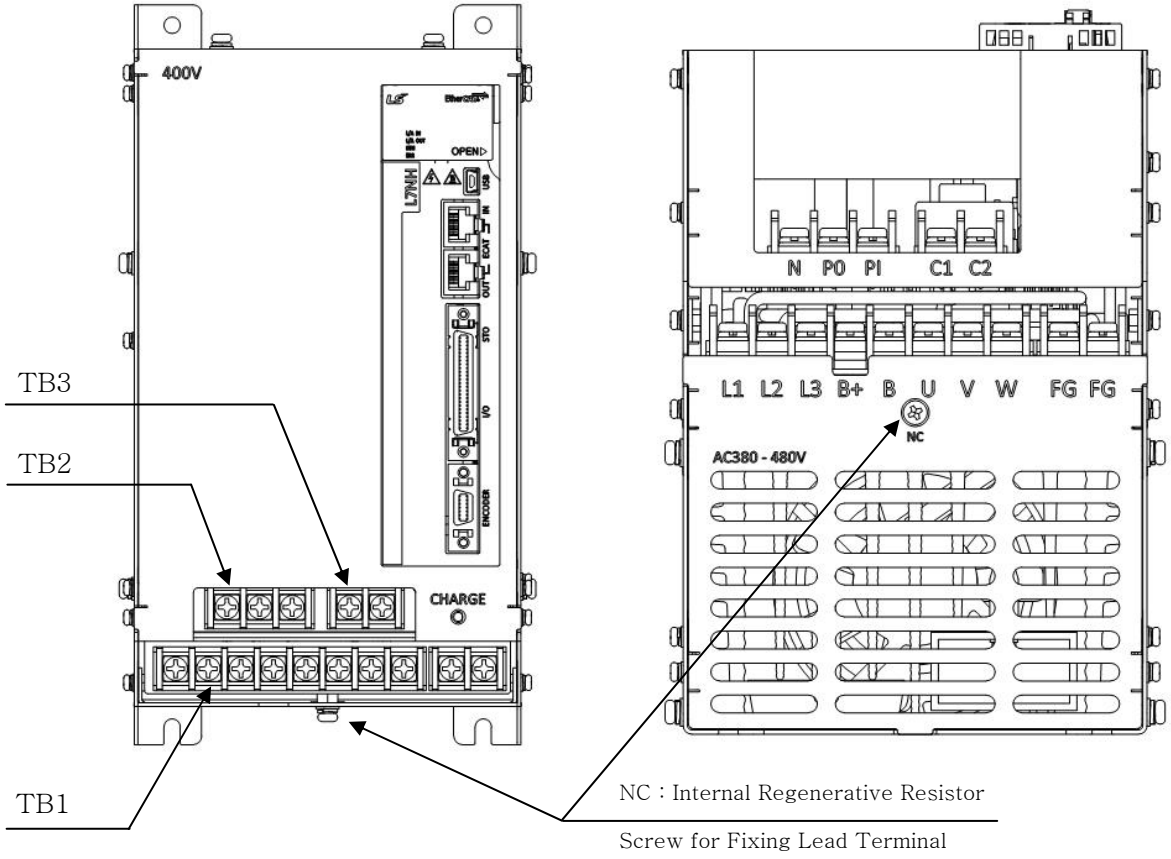


## Terminal signal

TB1

| L1 | L2 | L3 | B+ | B | U | V | W | FG | FG |
|---|---|---|---|---|---|---|---|---|---|

Terminal screw: M4
Tightening torque: 1.2 N·m

TB2

| N | PO | P1 |
|---|---|---|

Terminal screw: M4
Tightening torque: 1.2 N·m

TB3

| C1 | C2 |
|---|---|

Terminal screw: M4
Tightening torque: 1.2 N·m

- **XDL-L7□B075□**

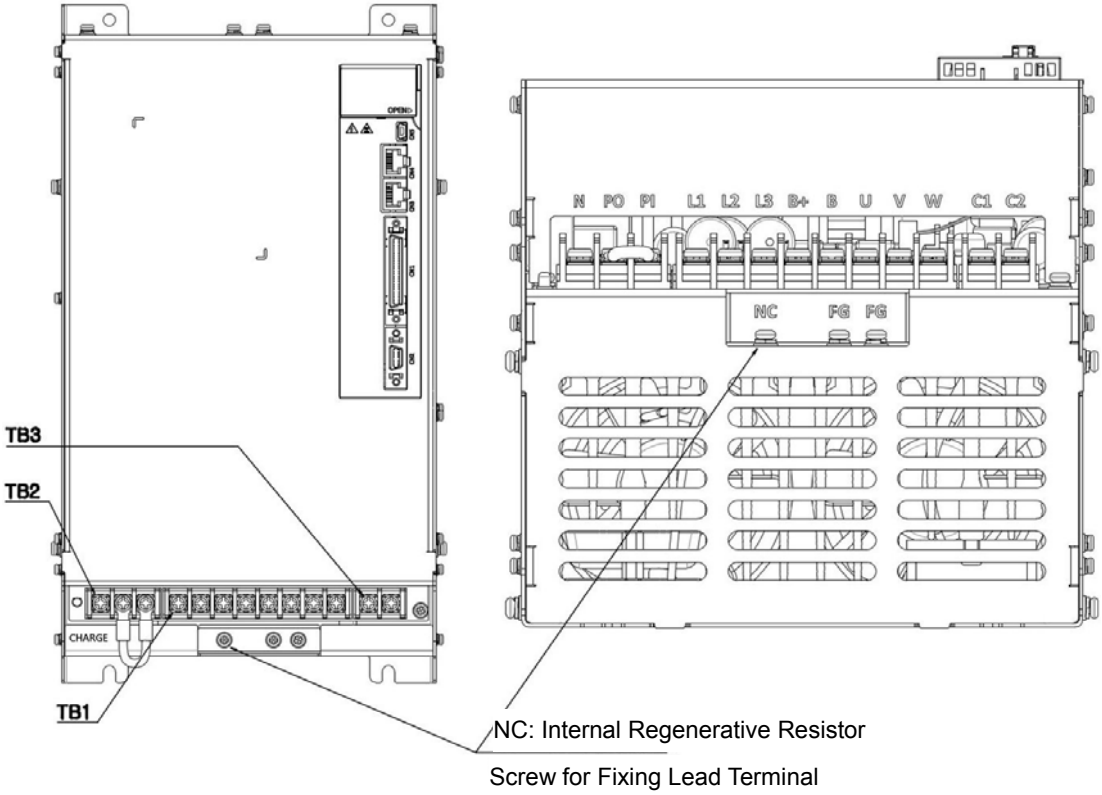


**Layout of the Terminal Signals**

TB1

| L1 | L2 | L3 | B+ | B | U | V | W |
|---|---|---|---|---|---|---|---|

Terminal screw: M4
Tightening torque: 1.2 N•m

TB2

| N | PO | PI |
|---|---|---|

Terminal screw: M4
Tightening torque: 1.2 N•m

TB3

| C1 | C2 |
|---|---|

Terminal screw: M4
Tightening torque: 1.2 N•m

**Note 1)** Otherwise, insufficient torque of locking screw may cause vibration-induced disconnection, system malfunction and contact-induced fire accident.
**Note 2)** Use FG locking screw of M4 size (shown in bottom of product) to tighten it to 1.2 N·m.

- **XDL-L7□B150□**

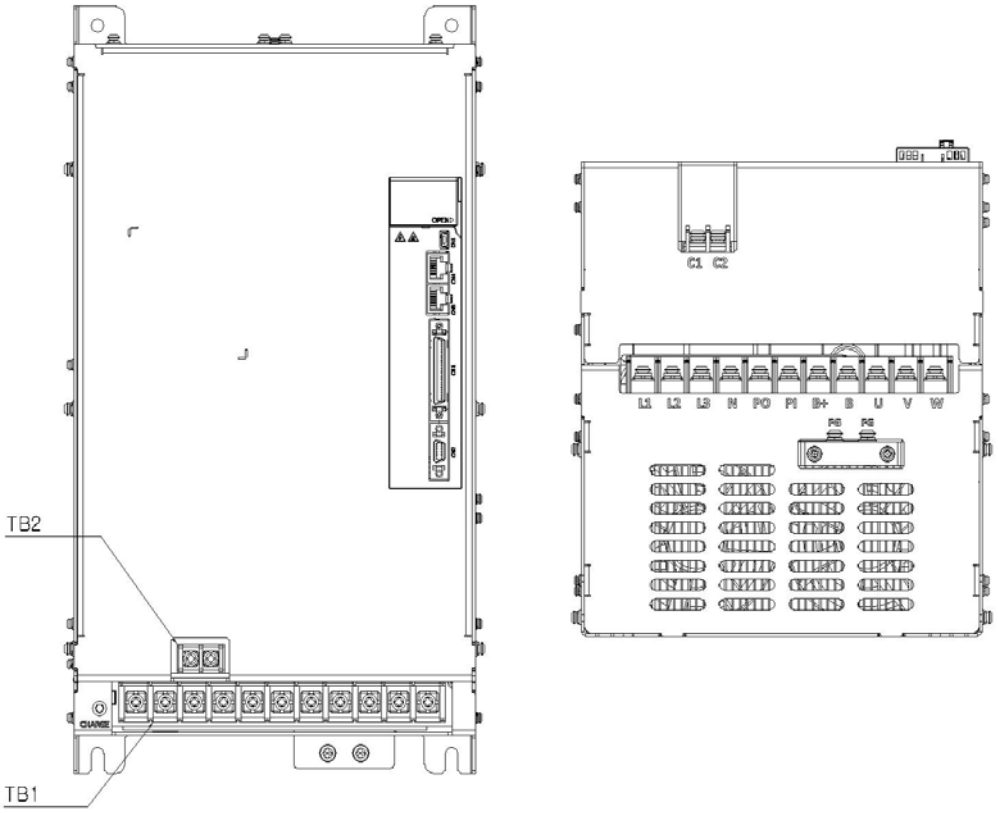


TB1

| L1 | L2 | L3 | N | PO | PI | B+ | B | U | V | W |
|---|---|---|---|---|---|---|---|---|---|---|

Terminal screw: M5
Tightening torque: 3.24 N·m

TB2

| C1 | C2 |
|---|---|

Terminal screw: M4
Tightening torque: 1.2 N·m

Terminal screw: M5
Tightening torque: 3.24 N·m

FG

**Note 1)** Otherwise, insufficient torque of locking screw may cause vibration-induced disconnection, system malfunction and contact-induced fire accident.
**Note 2)** Use FG locking screw of M4 size (shown in bottom of product) to tighten it to 1.2 N·m.

# 3.3 Example of wiring with PLC

## 3.3.1 XGT PLC

1. XGF-PO1/2/3A (Open Collector)

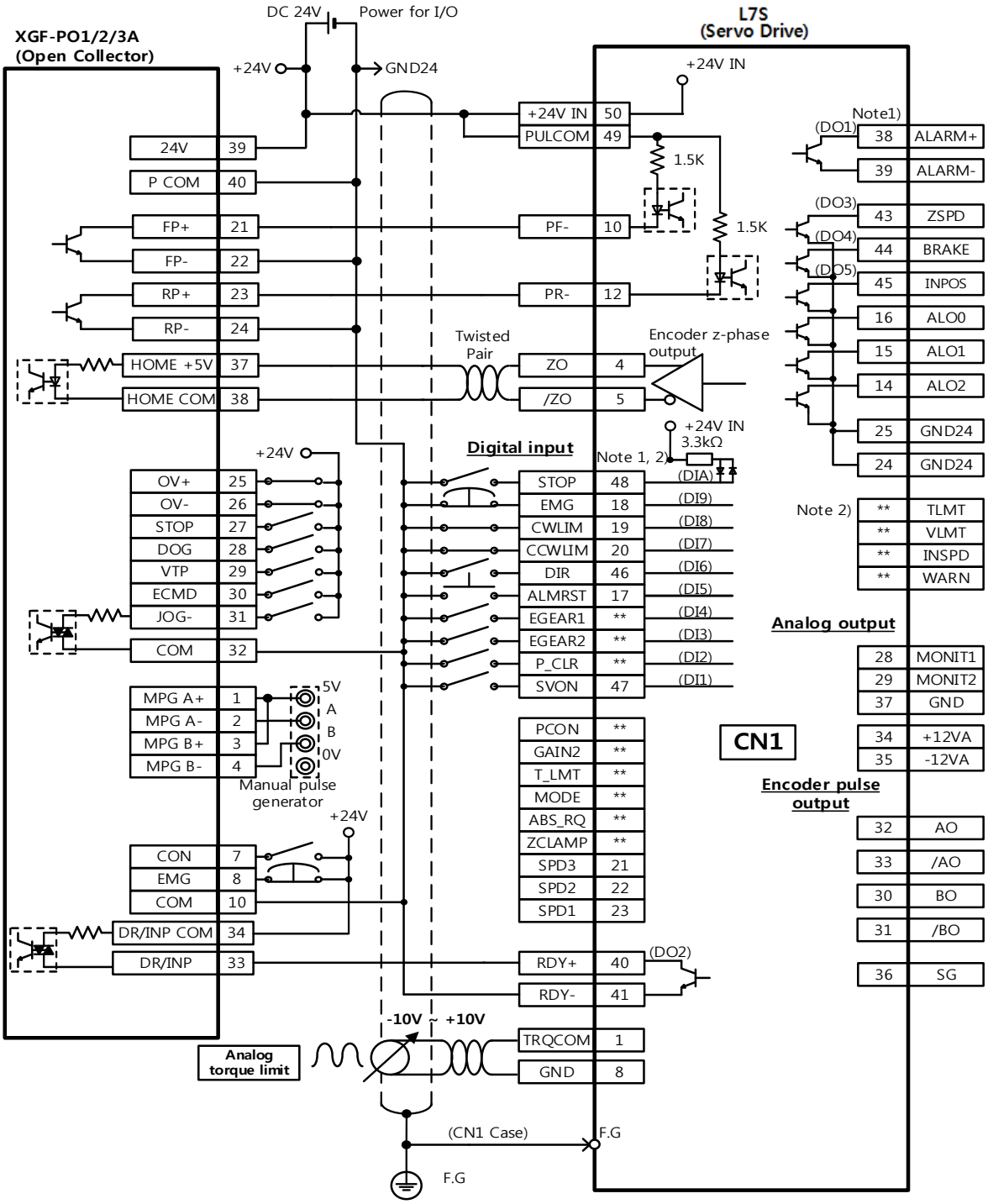


※ This is the example of wiring for 1 axis. In case of 2,3 and 4 axes, refer to pin map of position module on PLC.

## 2. XGF-PD1/2/3A (Line Driver)

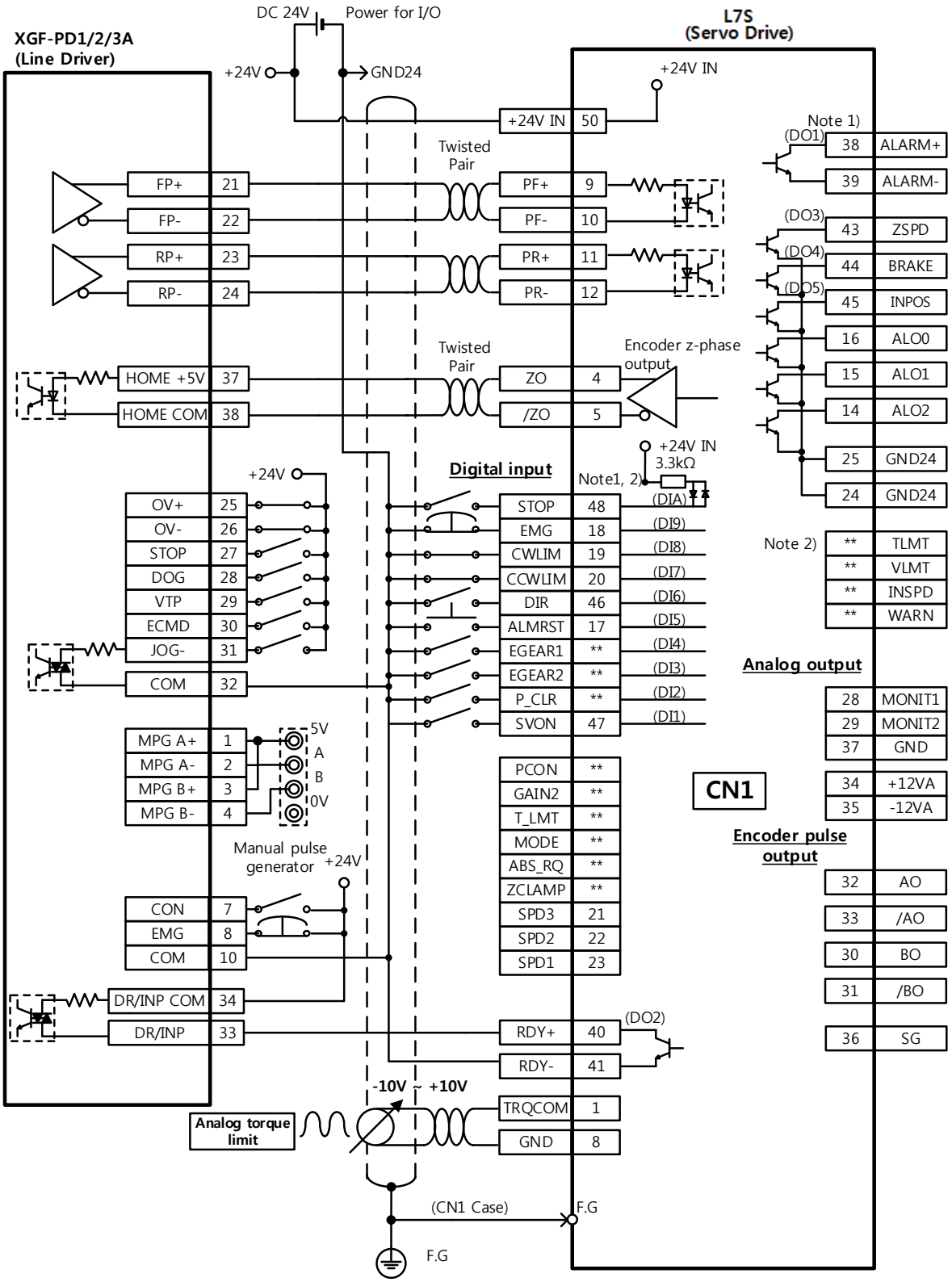


※ This is the example of wiring for 1 axis. In case of 2,3 and 4 axes, refer to pin map of position module on PLC.

## 3. XGF-PO1/2/3/4H (Open Collector)

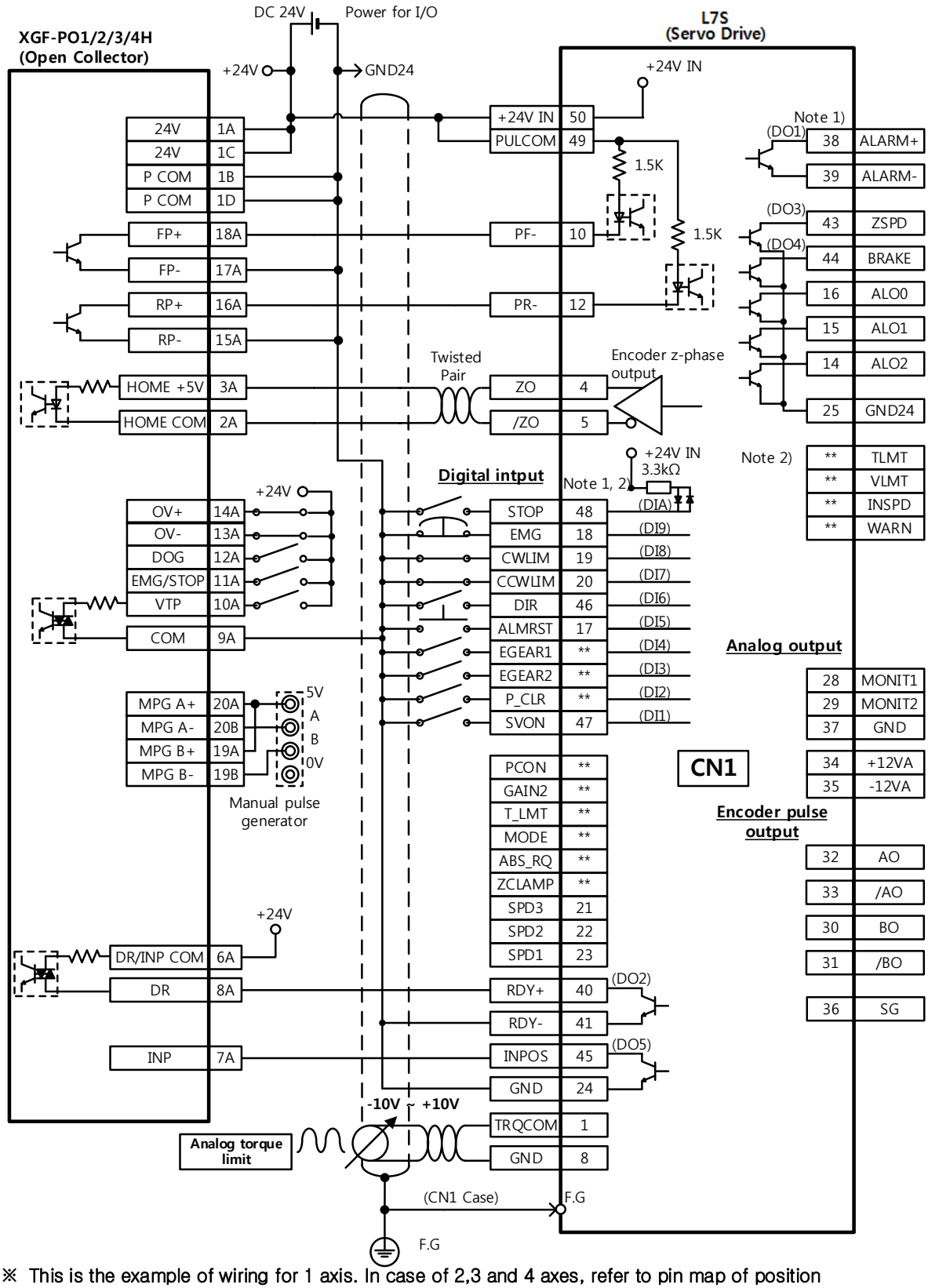


※ This is the example of wiring for 1 axis. In case of 2,3 and 4 axes, refer to pin map of position module on PLC.

## 4. XGF-PD1/2/3/4H (Line Driver)

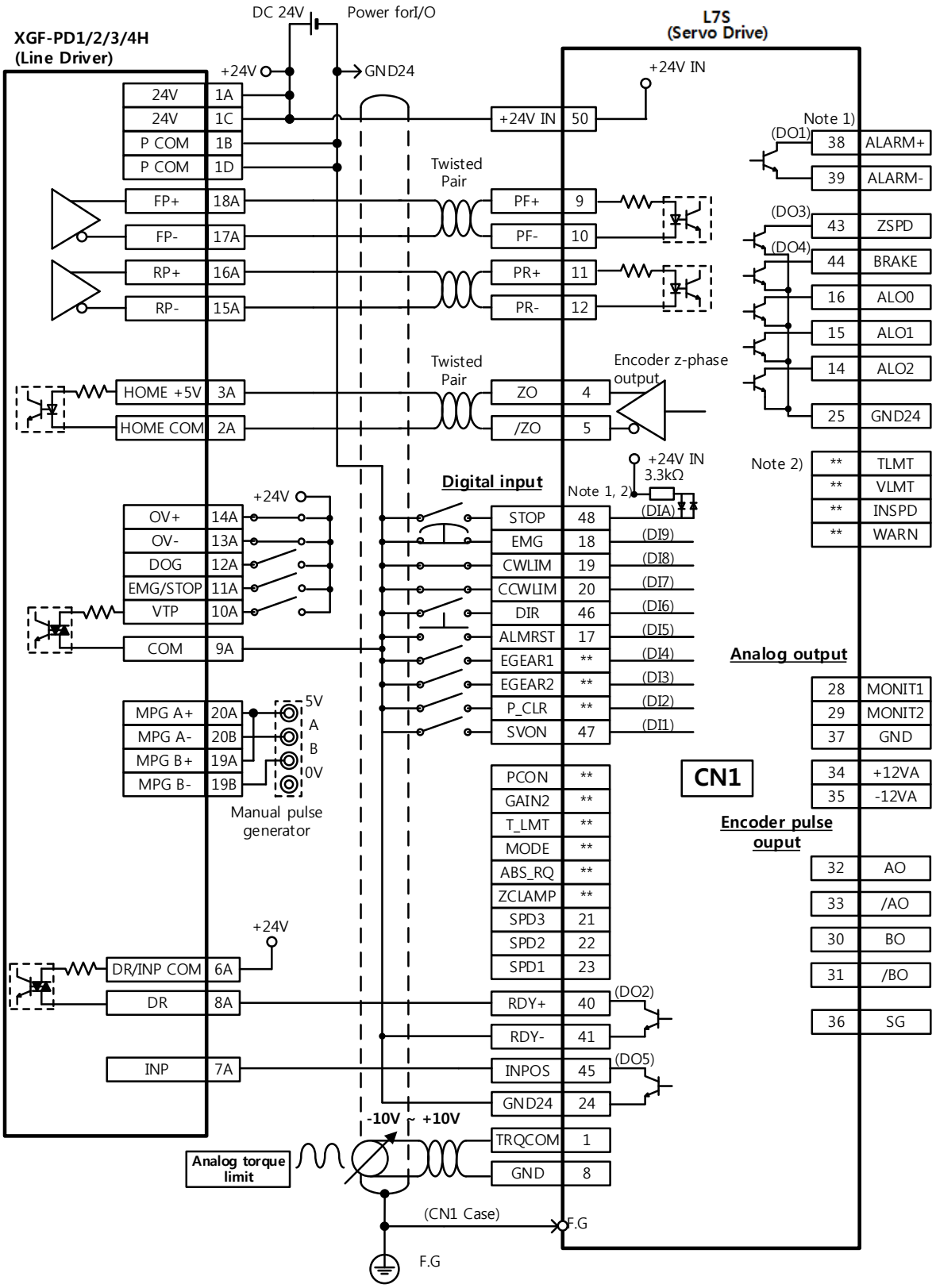


※ This is the example of wiring for 1 axis. In case of 2,3 and 4 axes, refer to pin map of position module on PLC.

## 5. XBF-PD02A (Line Driver)

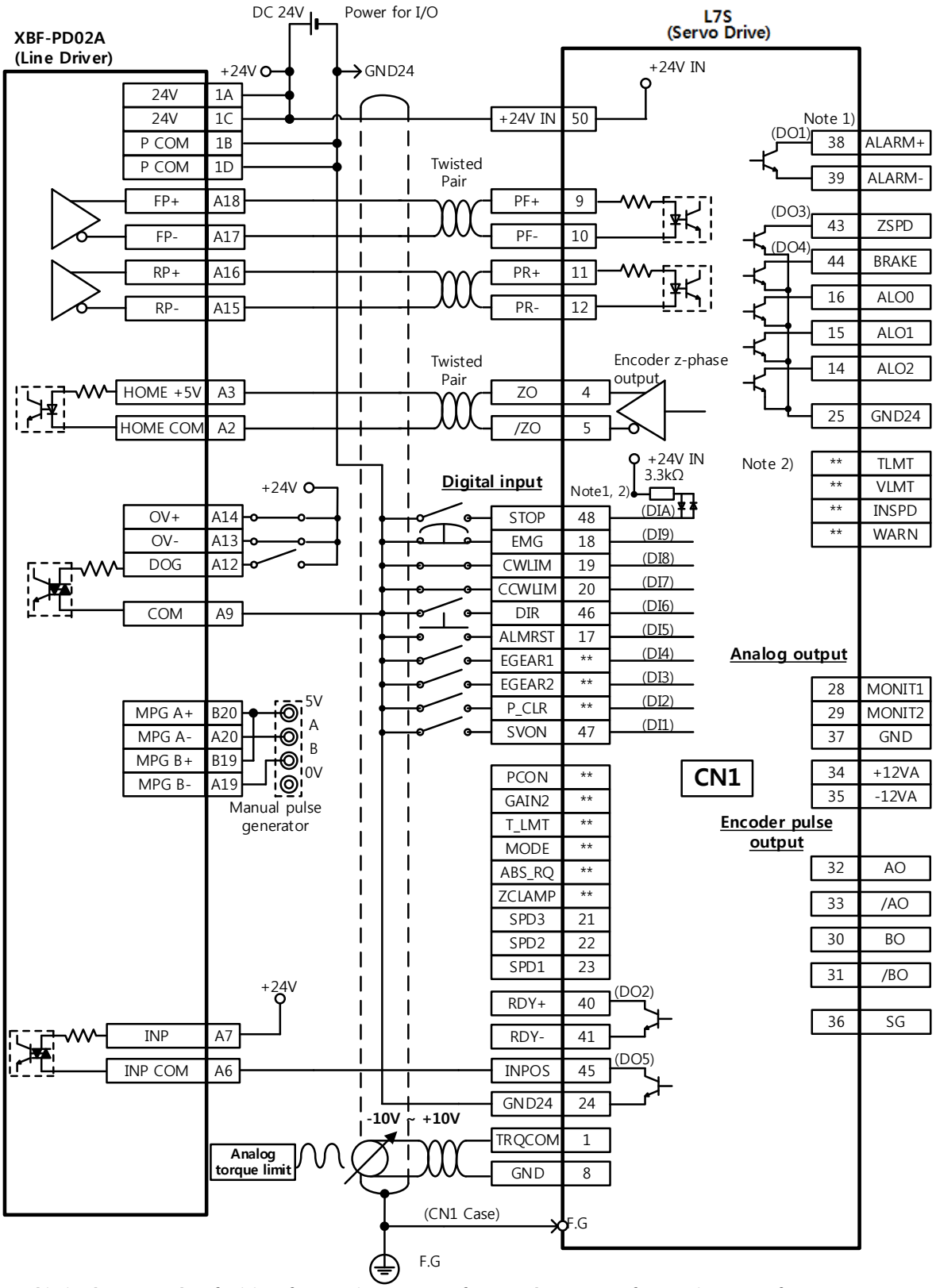


**※ This is the example of wiring for 1 axis. In case of 2,3 and 4 axes, refer to pin map of position module on PLC.**

## 6. XBM-DN**S (Open Collector)

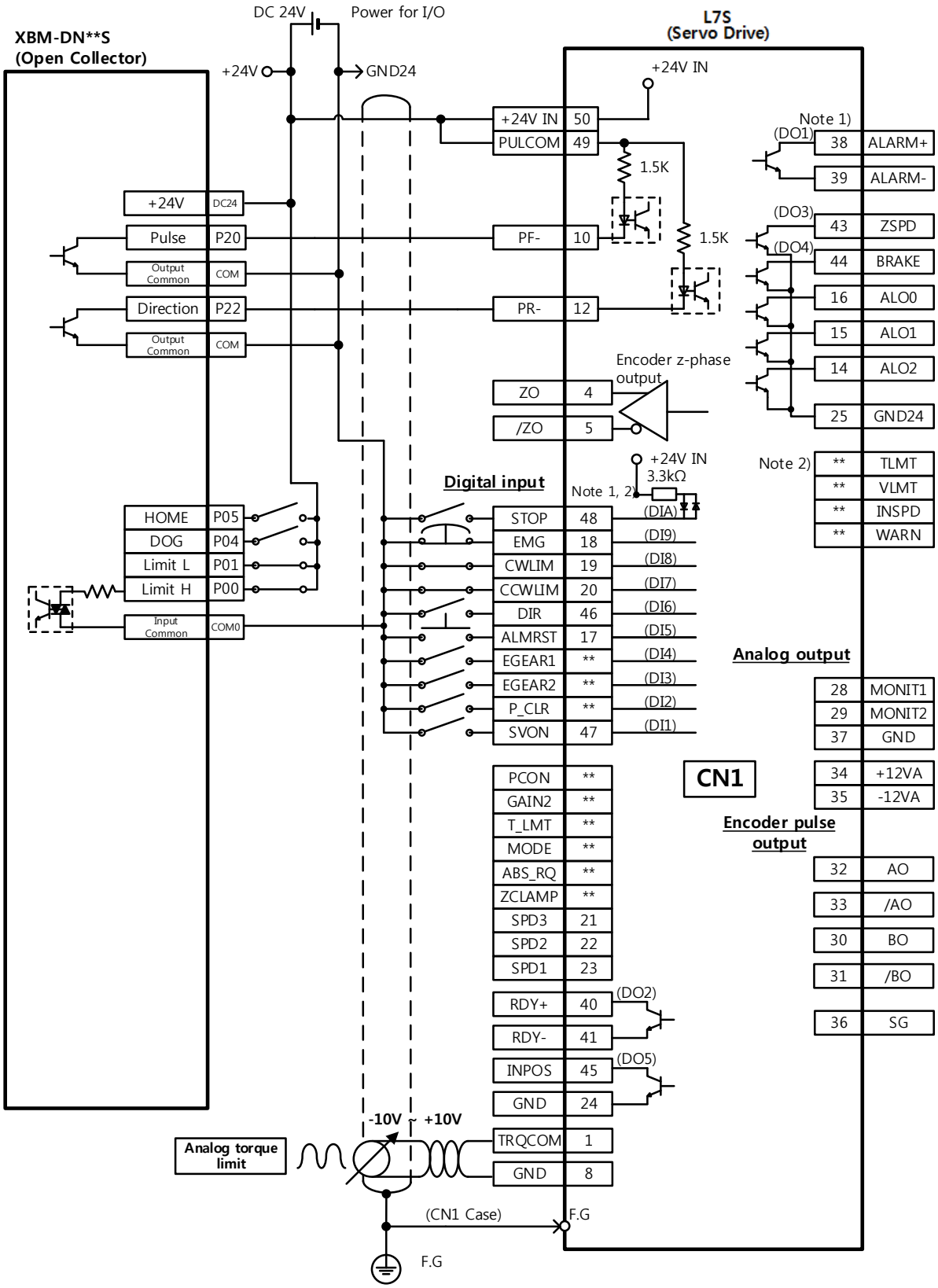


※ This is the example of wiring for 1 axis. In case of 2,3 and 4 axes, refer to pin map of position module on PLC.

## 7. XBC/XEC-DNxxH (Open Collector)

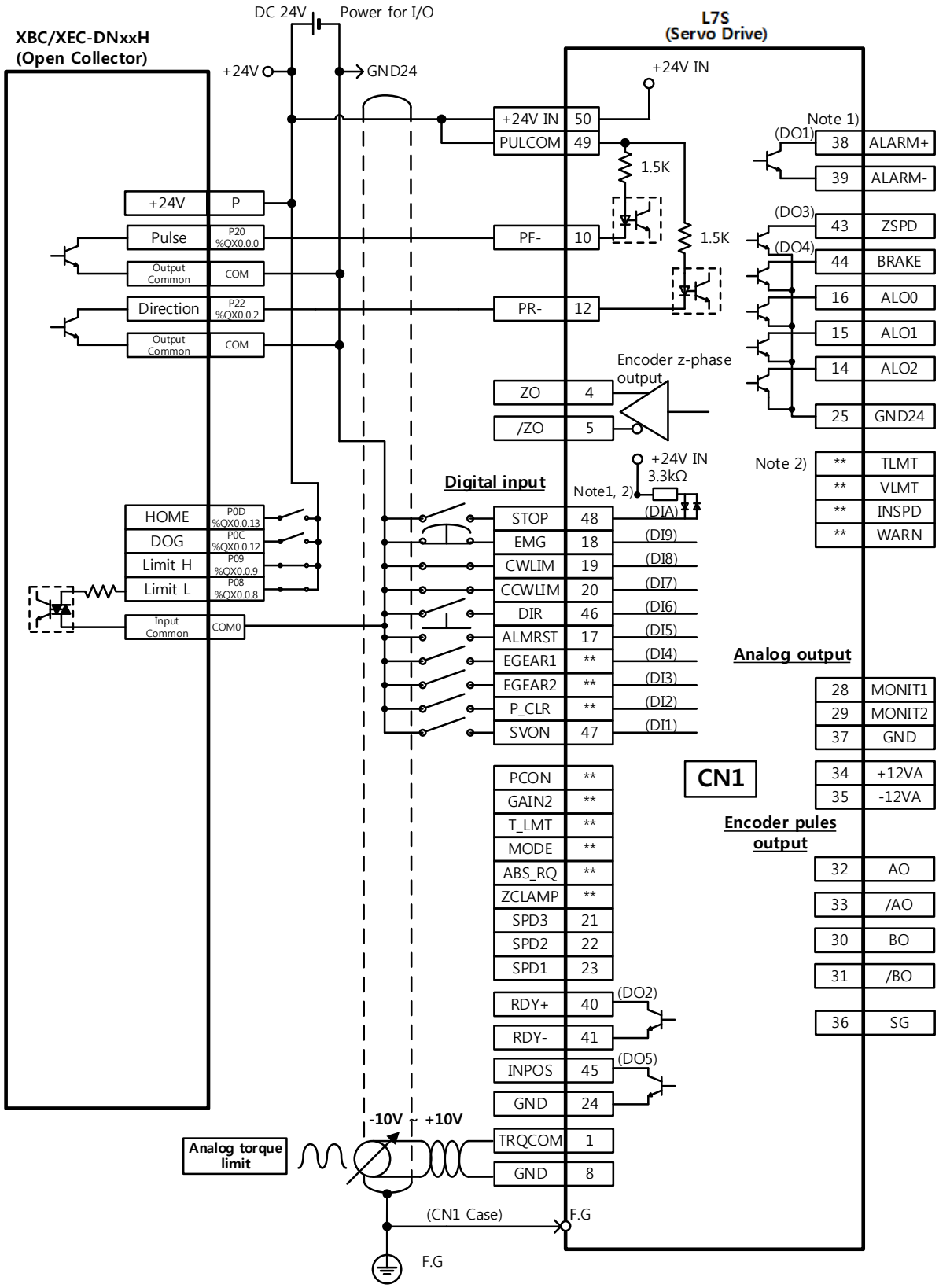


※ This is the example of wiring for 1 axis. In case of 2,3 and 4 axes, refer to pin map of position module on PLC.

# 3.4 Timing Diagram

## 3.4.1 Timing Diagram During Power Input

For XDL-L7 Series, connect single-phase power to the C1 and C2 terminals to supply power to the control circuit, and three-phase power to L1, L2, and L3 to supply power to the main circuit.

The servo signal becomes Ready after the maximum time of 120 ms that is required to reset the inside of the device. If you change the signal to ON, the servo starts operation in 40 ms.

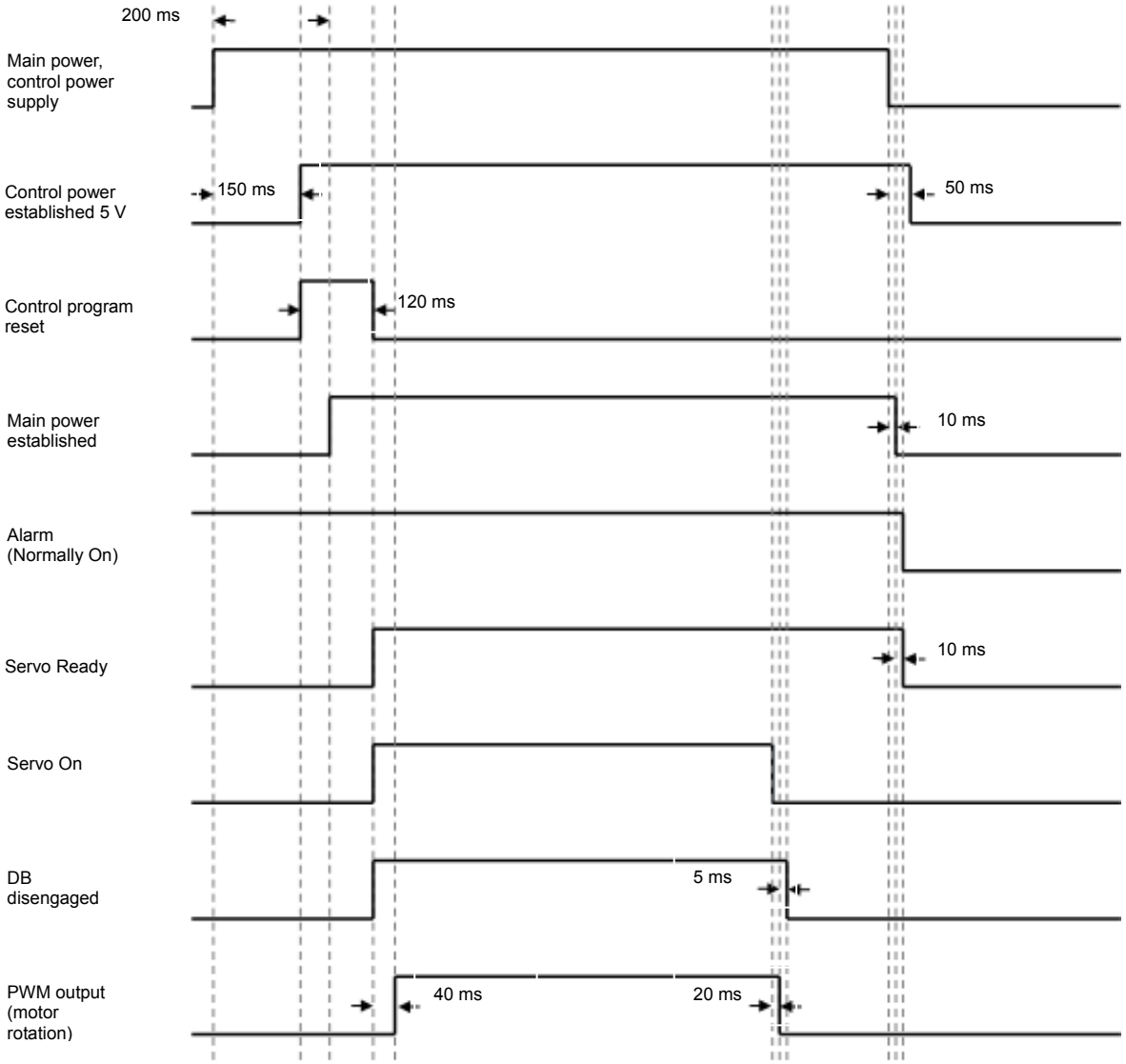

## 3.4.2 Timing Diagram During an Alarm Trigger

When an alarm is triggered in the servo drive, it blocks the PWM and stops the motor.

| ⚠ Caution |
| --- |
| ▪ Never reset the alarm before you solve the problem that triggered the alarm and change the command signal (Servo ON) to OFF. |

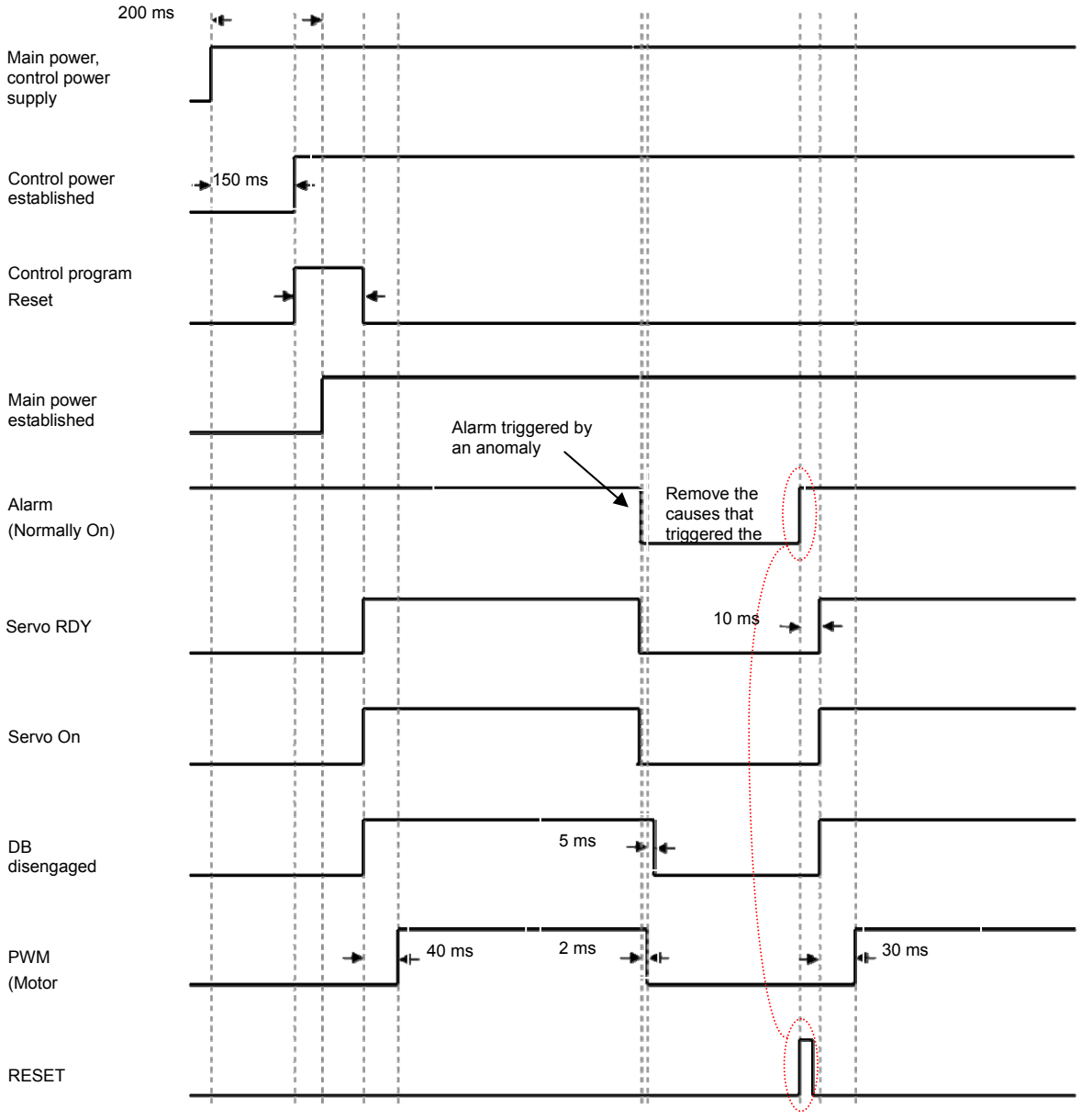

# 3.5 Wiring the Control Signals

## 3.5.1 The Contact Input Signal

**⚠ Caution**

1. There are two input contacts based on the characteristics of individual signals: contact A and contact B. They can be set by [P2-08] and [P2-09].
2. It is possible to turn each contact on or off forcibly with [Cn-07]. Take extra caution, however, because each contact is automatically turned off when power is off.
3. The signal definition of each contact can be modified by [P2-00], [P2-01], [P2-02], [P2-03], and [P2-04].

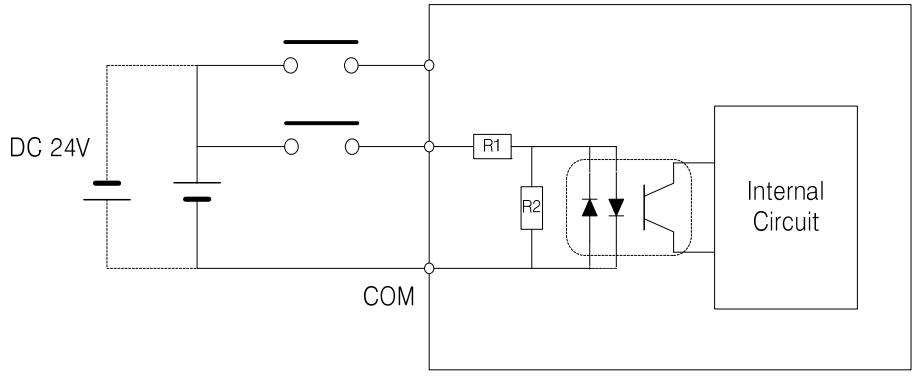


R1: 3.3 KΩ, R2: 680 Ω

## 3.5.2 The Contact Output Signal

**⚠ Caution**

4. There are two output contacts based on the characteristics of individual signals: contact A and contact B. They can be set by [P2-10].
5. It is possible to turn each contact on or off forcibly with [Cn-08]. Take extra caution, however, because each contact is automatically turned off when power is off.
6. The signal definition of each contact point can be modified by [P2-05], [P2-06], and [P2-07].
7. Overvoltages or overcurrents may damage the device because it uses an internal transistor switch.
   - Rated voltage and current: DC 24 V ±10%, 120 mA

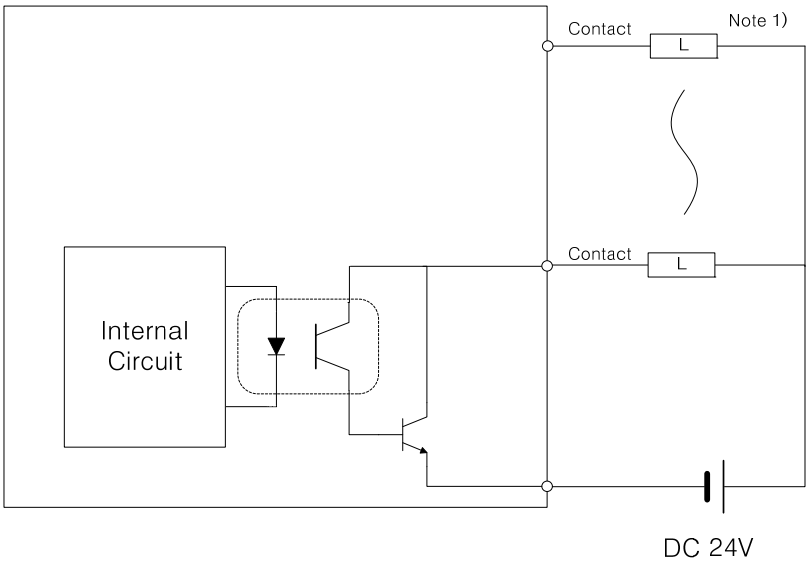


**Note 1)** For alarm and ready output signals, the GND24 terminal is separated.

## 3.5.3 Analog Input/Output Signals

1. Keep GND as 0 V of control power.
2. Keep the input signal command voltage within ±10 V, and input impedance at 22 kΩ.
3. Output signal voltage for Monitor 1 (No. 28) and Monitor 2 (No. 29) is ±10 V.

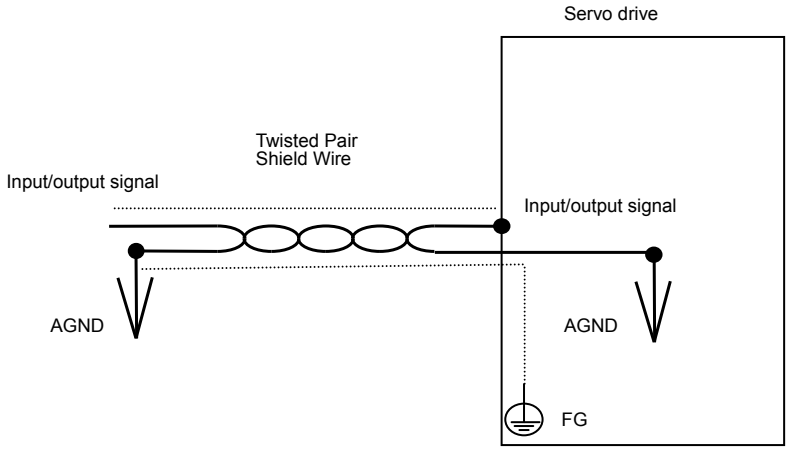


Configure wiring as shown in the following image when you adjust analog input with variable resistance by using power supplied by the drive.

Do not exceed the maximum output capacity of 30 mA.

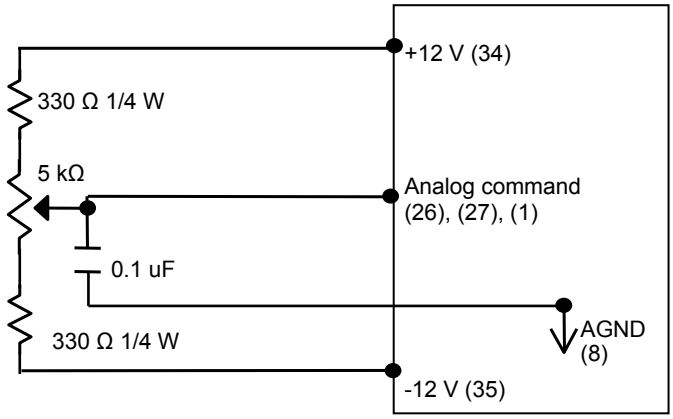

## 3.5.4 Pulse Train Input Signal

### (1) Line Drive (5 V) Pulse Input

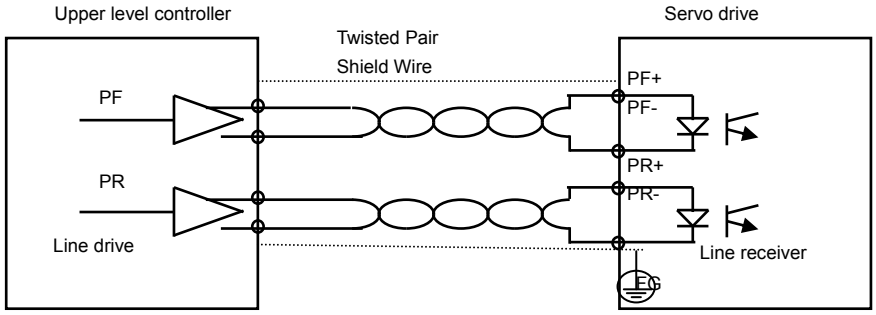


### (2) Open Collector (24 V) Pulse Input

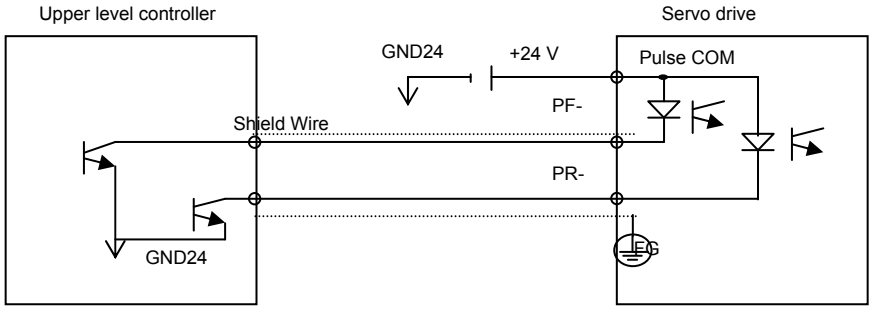


### (3) 12 V or 5 V NPN Open Collector Pulse Command

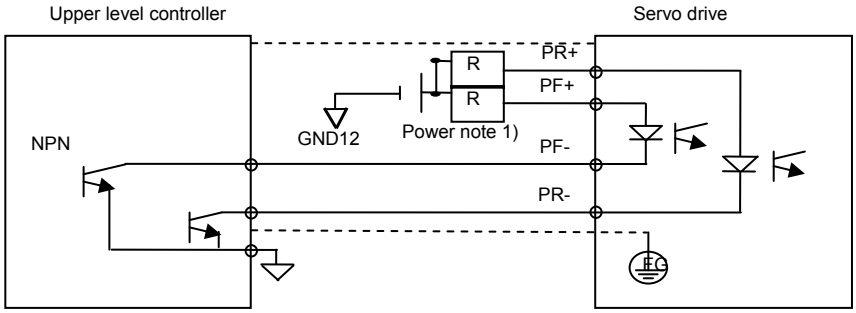


**Note 1)** When using 5 V power: Resistance R = 100-150 Ω, 1/2 W
When using 12 V power: Resistance R = 560-680 Ω, 1/2 W
When using 24 V power: Resistance R = 1.5 kΩ, 1/2 W

### (4) PNP Open Collector Pulse Command

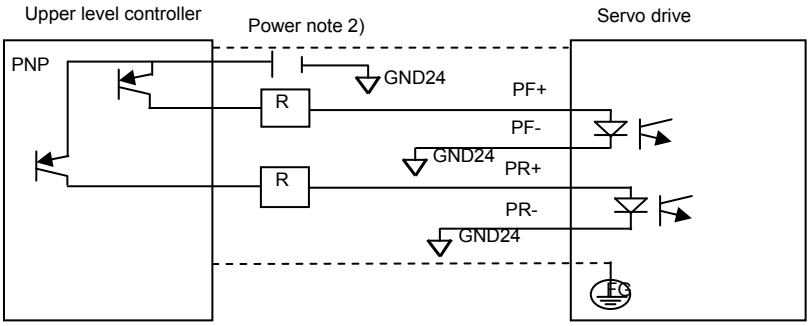


**Note 2)** When using 24 V power: Resistance R = 1.5 kΩ, 1/2 W
When using 12 V power: Resistance R = 560-680 Ω, 1/2 W
When using 5 V power: Resistance R = 100-150 Ω, 1/2 W

## 3.5.5 Encoder Output Signal

Connect the GND terminal of the upper level controller and the GND terminal of CN1 because encoder signals are output based on the GND of control power.

Encoder signals for the servo motor received from CN2 are pre-scaled according to the ratio defined by [P0-14] and output in line drive mode.

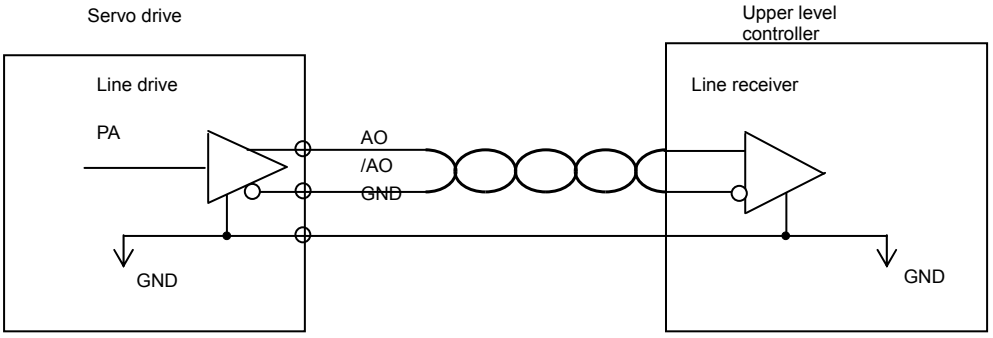


When you set Bit #3 of 'P0-17 Function Select Bit' to '1', Open Collector Phase A, B and Z are output with existing AL0, AL1 and AL2 contact output.

(Output current less than 40 mA, max. frequency = 100 Khz)

# 3.6 Quadrature Encoder Signaling Unit (CN2) Wiring

## 3.6.1 XLCS-E□AS Cable

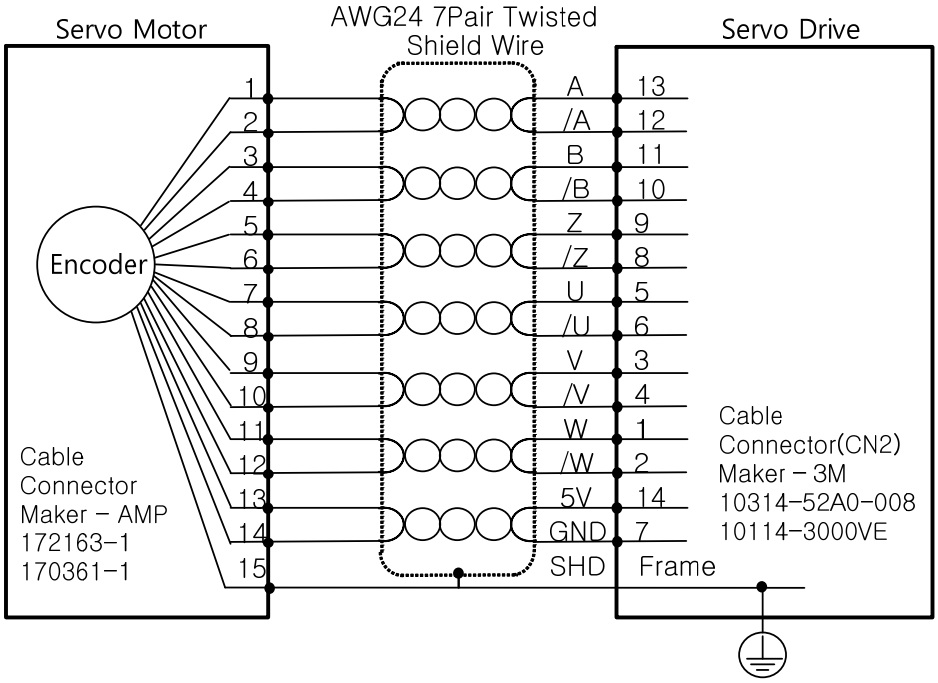


## 3.6.2 XLCS-E□BS Cable

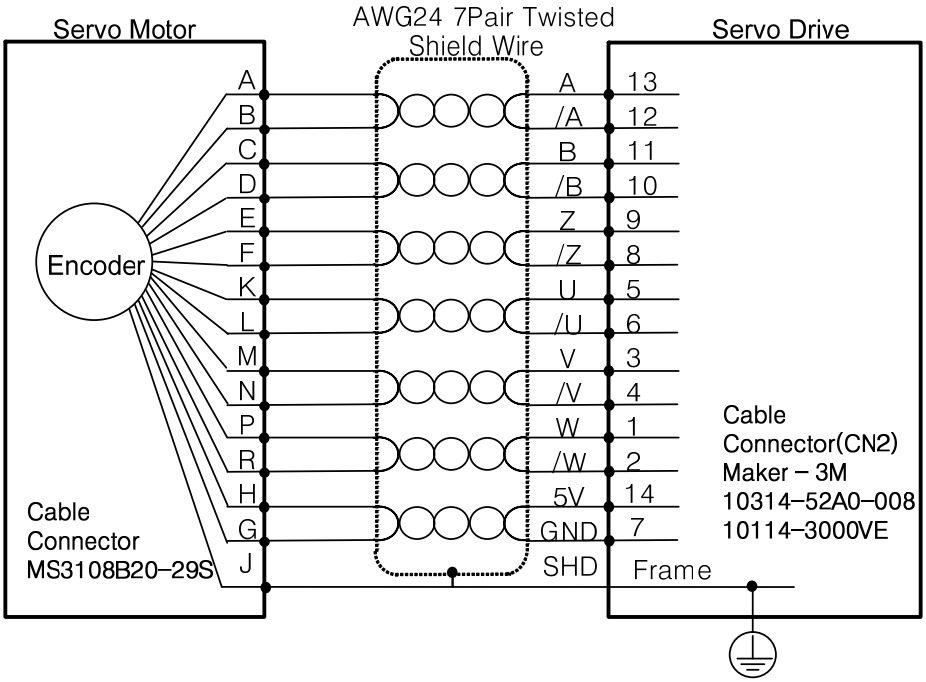

# 3.7 Connecting the Serial Encoder Signals (CN2)

## 3.7.1 XLCS-E□CS Cable

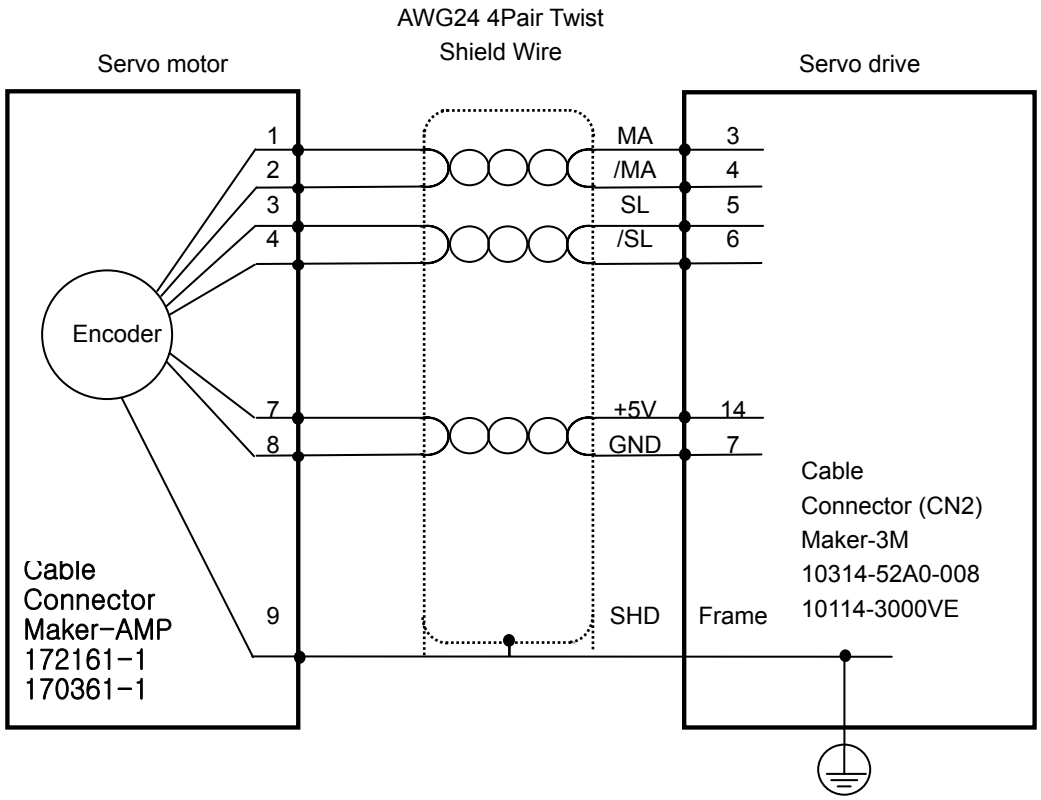

## 3.7.2 XLCS-E□DS Cable

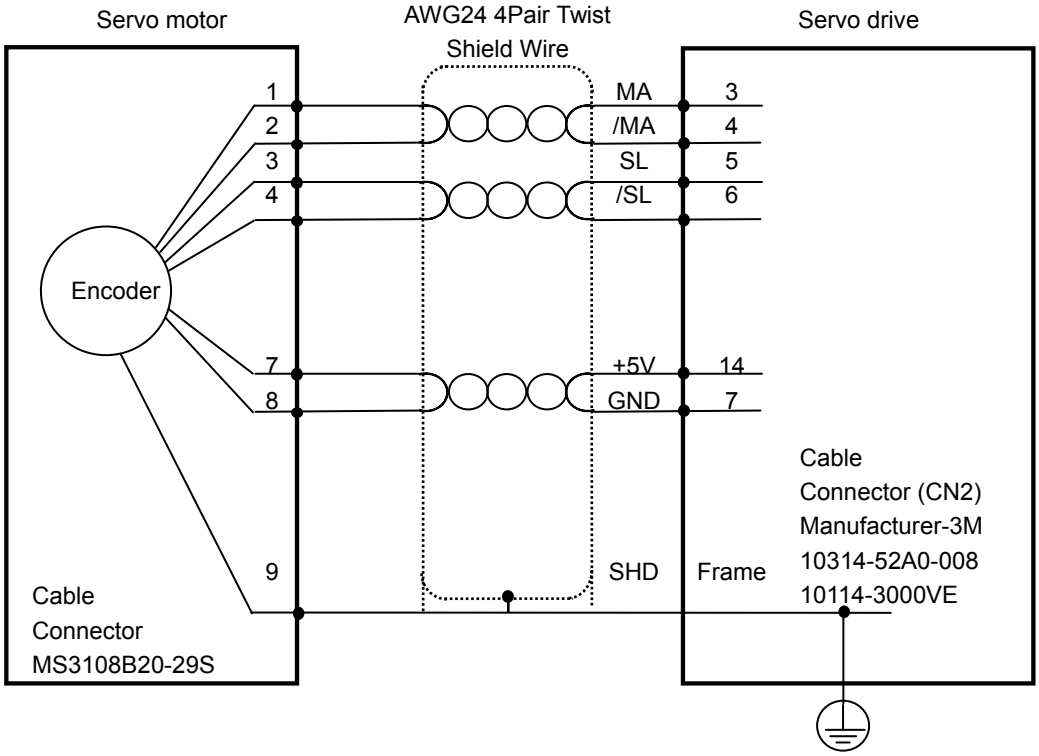


## 3.7.3 XLCS-E□ES Cable

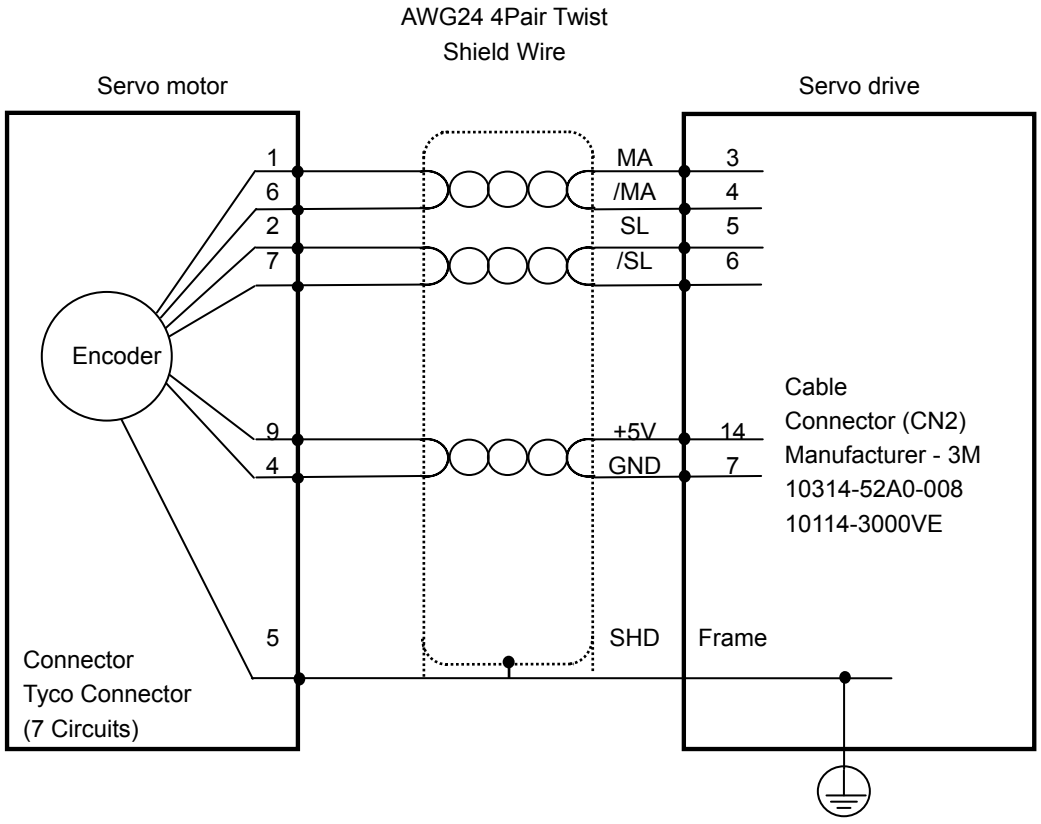

# 3.8 Multi-turn Encoder Signaling Unit (CN2) Wiring

## 3.8.1 XLCS-E□CS1 Cable

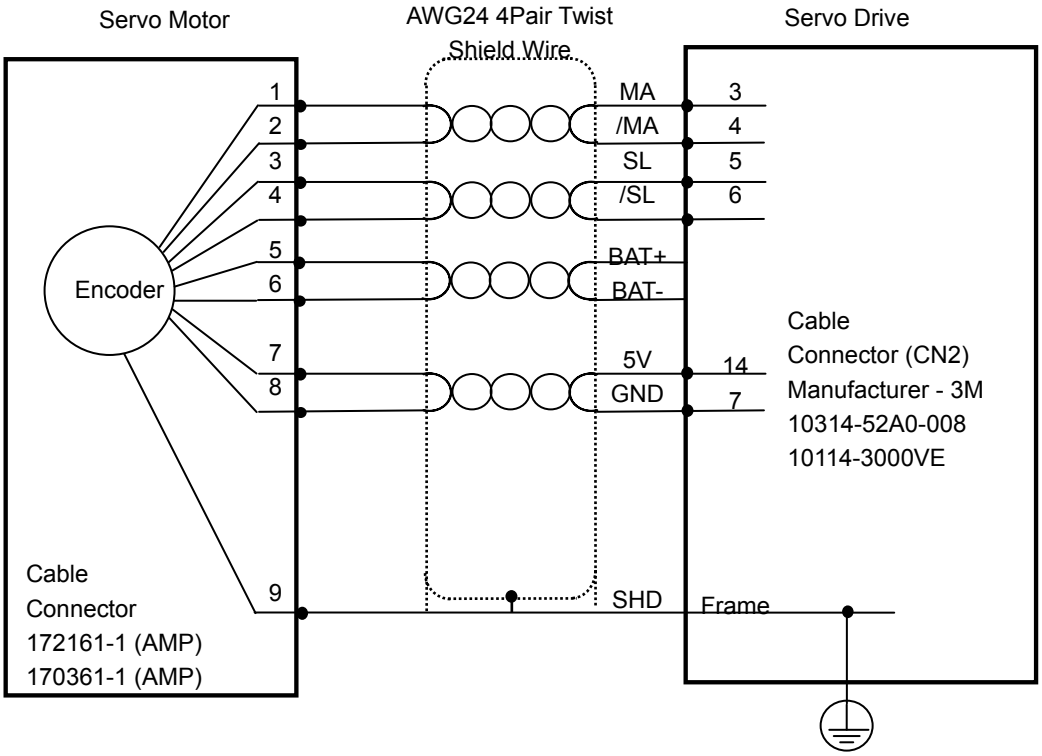

## 3.8.2 XLCS-E□DS1 Cable

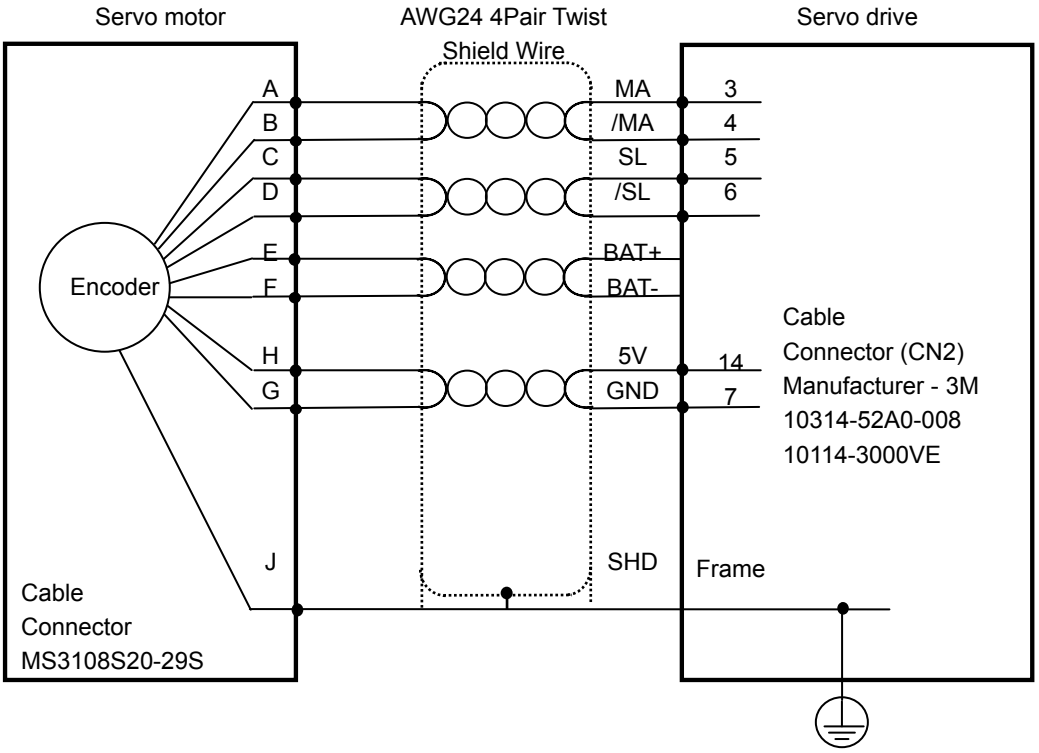


## 3.8.3 XLCS-E□ES1 Cable

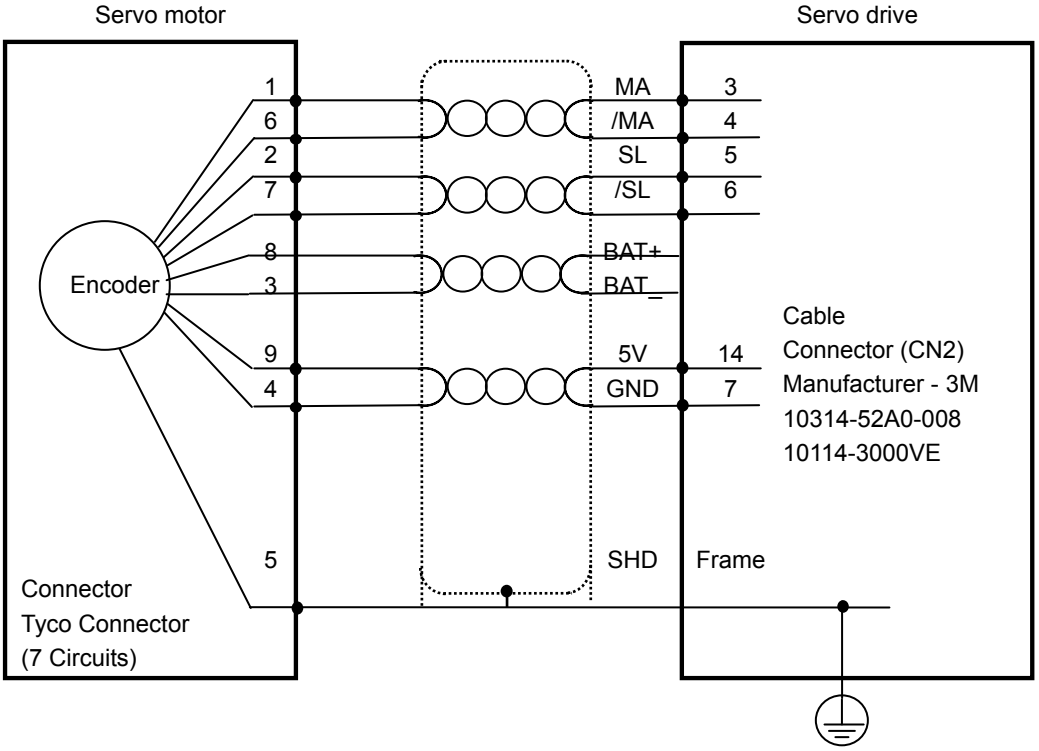

# 3.9 Transmission of Absolute Value Encoder Data

## 3.9.1 Transmission of Absolute Value Encoder Data

Upon the absolute value encoder's request for absolute value data, the data of the absolute value encoder are transmitted to the upper level controller in the form of quadrature pulses through the output of the encoder output signals, AO and BO.

In this case, pulses are output at the speed of 500 Kbps.

Among absolute value data, multi-turn data are transmitted first, followed by single-turn data. (Refer to “4.1.6 External Input Signal and Logic Definition" for information on the allocation of the sequence input signal and ABS-RQ signal.)

### ■ Transmission Sequence of Absolute Value Data

1. When the servo is off, change the ABS_RQ signal on the upper level controller to ON.
2. The servo drive checks the ABS_RQ signal for 10 ms.
3. The servo drive prepares the transmission of multi-turn data for 100 ms.
4. The servo drive transmits multi-turn data for up to 140 ms (based on 16-bit multi-turn data).
5. The servo drive prepares the transmission of single-turn data for 100 ms.
6. The servo drive transmits single-turn data with the pre-scale ratio applied for up to 1100 ms (based on 19-bit single-turn data).
7. The servo drive operates with normal encoder output signals 100 ms after the single-turn data are completely transmitted.

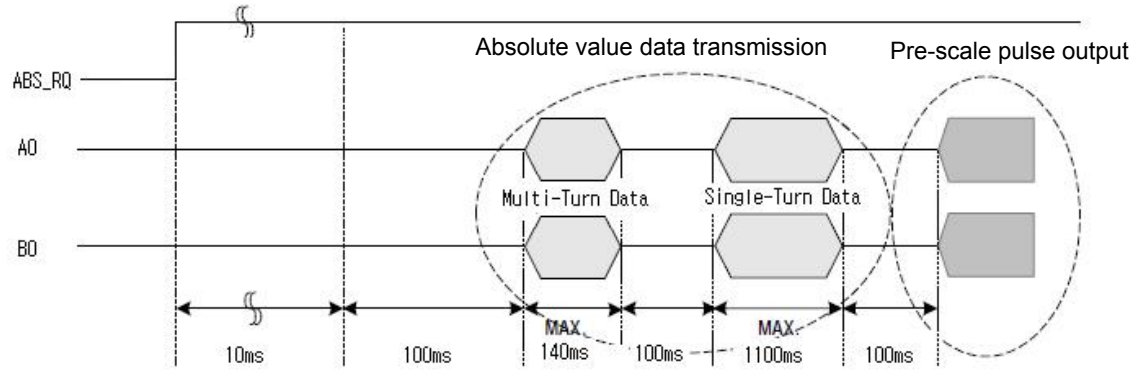

# 4. Parameters

## 4.1 How to Use the Loader

### 4.1.1 Name and Function of Each Part

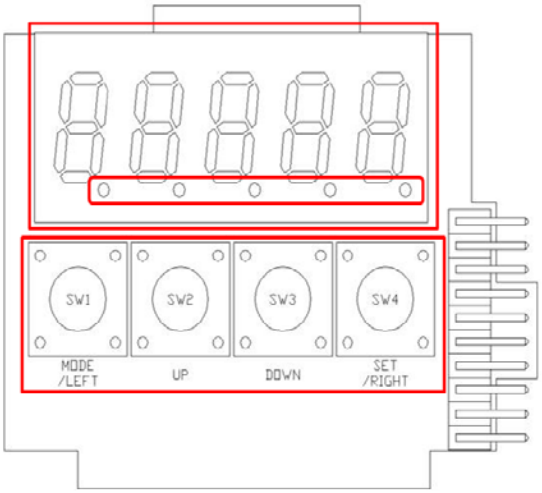


Display 5-digit FND data.

DIGIT5 DIGIT4 DIGIT3 DIGIT2 DIGIT1

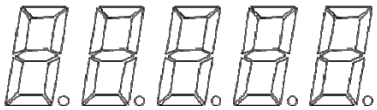

[MODE]: Change display mode.
[/LEFT]: Move to another data digit.
[UP]: Increase displayed data.
[DOWN]: Decrease displayed data.
[SET]: Confirm displayed data.
[/RIGHT]: Move to another data digit.

Displays the decimal point.


E.g.) 123.4

In the case of 16 bits, the minus symbol is used.

In the case of 32 bits, a dot is used.


E.g.) -123.4

## 4.1.2 Status Summary Display

### (1) Status Summary Display in Speed Mode

① Example of the OFF status of the servo in speed control mode

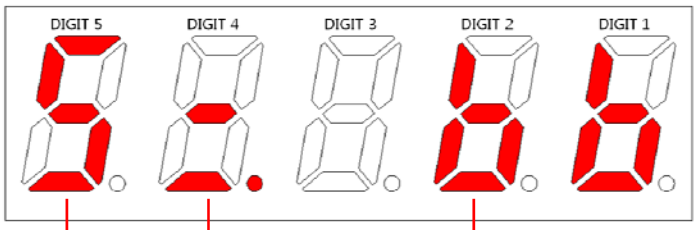


DIGIT 3-1: Displays the current status of the servo.

- bb - Servo OFF
- run - Servo ON
- Pot - CCW Limit
- not - CW Limit

DIGIT 4_High: ZSPD

DIGIT 4_Medium: INSPD or INPOS

DIGIT 4_Low: Command (speed or torque)

DIGIT 4_DOT: Ready

DIGIT 5: Displays the current control mode.

- P - Position control
- S - Speed control
- T - Torque control

DIGIT 5_DOT: Servo ON

② Example of the ON status of the servo in speed control mode

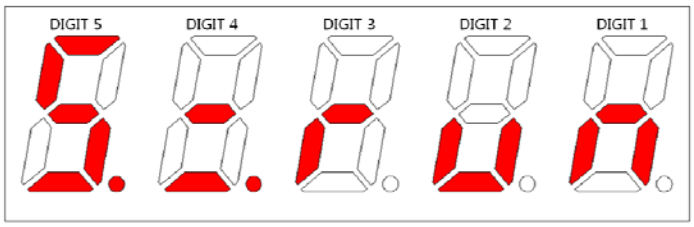

## (2) Servo Operation Status Summary Display List

The following list explains the operation status summary display of different modes of the servo.

| Operation Status Screen | Function | Notes |
|---|---|---|
|  | Displays the servo's OFF status when in the position mode. | |
|  | Displays the servo's ON status when in position mode. | |
|  | Displays CCW status when in position mode. | |
|  | Displays CW status when in position mode. | |
|  | Displays the servo's OFF status when in speed mode. | |
|  | Displays the servo's ON status when in speed mode. | |
|  | Displays CCW status when in speed mode. | |
|  | Displays CW status when in speed mode. | |
|  | Displays the servo's OFF status when in torque mode. | |
|  | Displays the servo's ON status when in torque mode. | |
|  | Displays CCW status when in torque mode. | |
|  | Displays CW status when in torque mode. | |

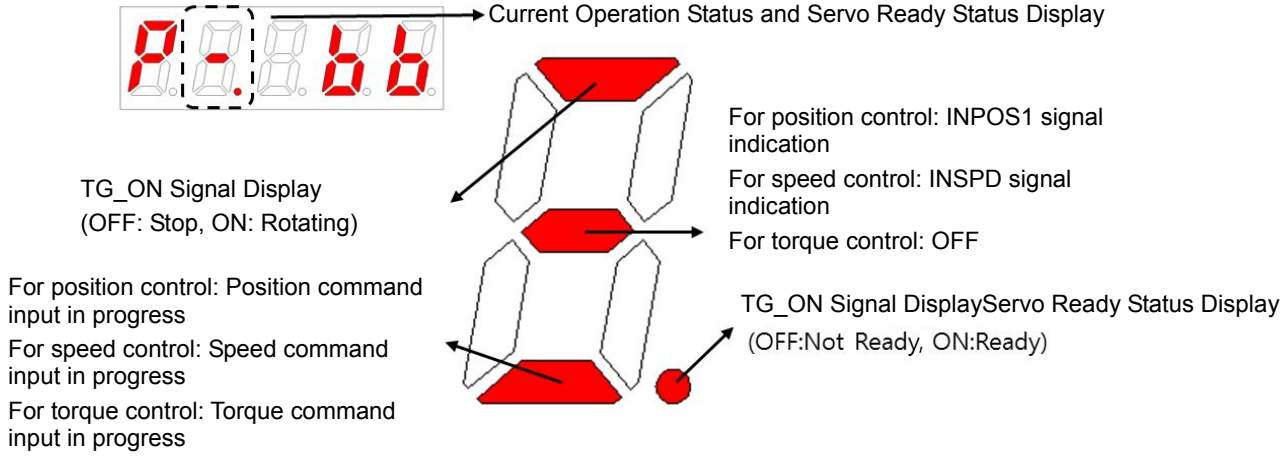

# 4.1.3 Parameter Handling

## (1) Parameter Movement

Example of changing speed control mode to position control mode ([P0-03]: 00001 → 00002)

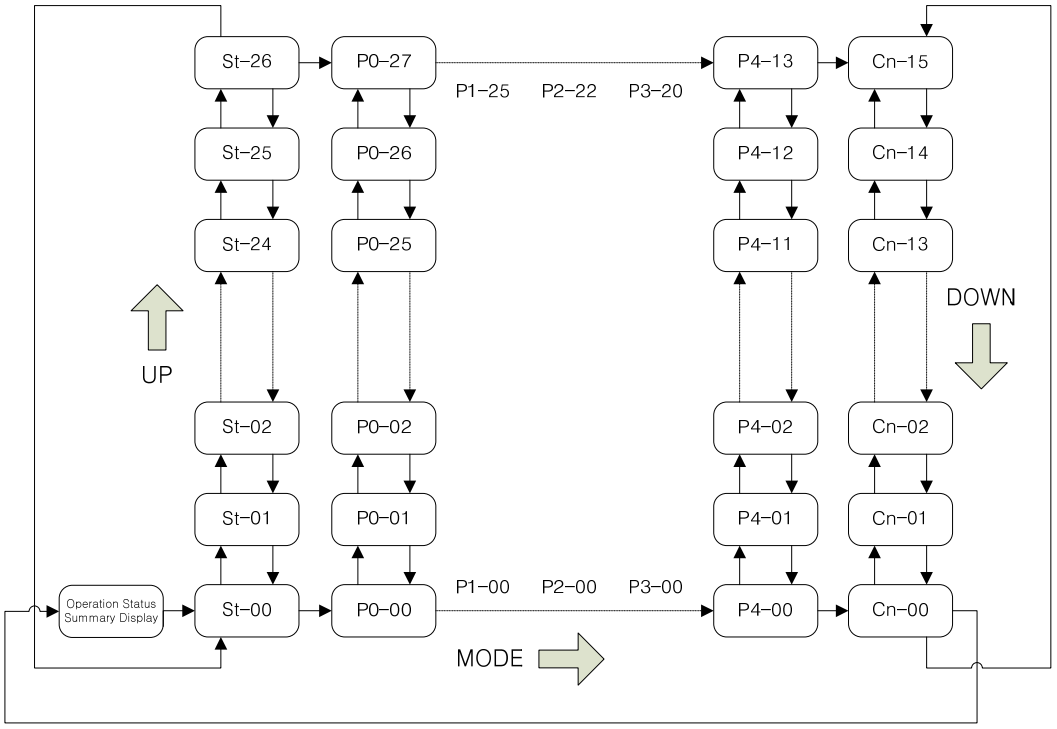


- If the alarm does not go off at the start of operation, the speed operation mode [S=bb] indicating operation status is displayed.
- Editable parameters are from [P0-00] to [Cn-15]. Press SET when a parameter number is displayed and you can see and edit the parameter data.
- In the initial parameter edit status, the number on the far right flickers (ON and OFF for 0.5 seconds respectively) and becomes editable.

## (2) Example of changing speed control mode to position control mode ( [P0-03]: 00001 -> 00002 )

| Order | Loader Displays | Keys to Use | What to Do |
|---|---|---|---|
| 1 |  | 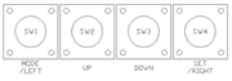 | Displays the speed control mode with main power and control power permitted. |
| 2 |  |  | Press MODE to move to [P0-00]. |
| 3 |  |  | Press UP or DOWN to move to [P0-03]. |
| 4 |  |  | Press SET to go to the parameter edit window. The parameter is displayed as 00001. |
| 5 |  |  | Press UP or DOWN at the blinking cursor to change the number to 00002. |
| 6 |  |  | Press and hold SET for approximately one second. After two flickers, the number will be saved as 00002 in the parameter. |
| 7 | 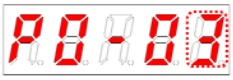 |  | Press and hold MODE for approximately one second to return to the P0-03 parameter. |
| 8 |  | 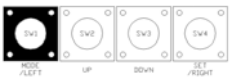 | Press MODE to change status to position operation [P= bb] status which is the summary display of the current status. |

**Note 1)** "▯" indicates flickering.
**Note 2)** If you hold down UP / DOWN at the current cursor in the parameter window, the number continues to increase/decrease.

## (3) Example of changing speed proportional gain 2 ([P1-07]: 200 rad/s -> 500 rad/s)

| Order | Loader Displays | Keys to Use | What to Do |
|---|---|---|---|
| 1 |  | 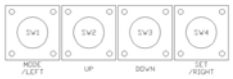 | Displays the speed control mode with main power and control power permitted. |
| 2 |  |  | Press MODE to move to [P1-00]. |
| 3 |  | 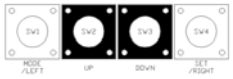 | Press UP or DOWN to move to [P1-07]. |
| 4 |  | 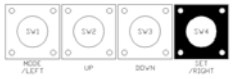 | Press SET to enter parameter edit mode. The parameter is displayed as 00200. |
| 5 |  |  | Press /LEFT or /RIGHT at the blinking cursor to move to the desired digit, DIGIT 3. |
| 6 |  | 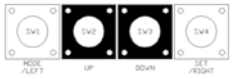 | Press UP or DOWN at the blinking DIGIT 3 position to change the number to 00500. |
| 7 |  |  | Press and hold SET for approximately one second. After two flickers, the number will be saved as 00500 in the parameter. |
| 8 | 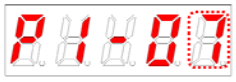 |  | Press and hold MODE for approximately one second to return to [P1-07]. |

**Note 1)** "▯" indicates flickering.
**Note 2)** If you hold down UP / DOWN at the current cursor in the parameter window, the number continues to increase/decrease.

## (4) Example of changing DAC output offset 1 ([P0-19]: 0 Unit/V -> -500 Unit/V)

| Order | Loader Displays | Keys to Use | What to Do |
|---|---|---|---|
| 1 |  | 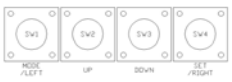 | Displays the speed control mode with main power and control power permitted. |
| 2 |  |  | Press MODE to move to [P0-00]. |
| 3 |  | 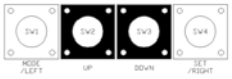 | Press UP or DOWN to move to [P0-19]. |
| 4 |  |  | Press SET to enter parameter edit mode. The parameter is displayed as 00000. |
| 5 |  | 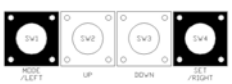 | Press /LEFT or /RIGHT at the blinking cursor to move to the desired digit, DIGIT 3. |
| 6 |  | 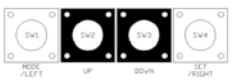 | Press UP or DOWN at the blinking DIGIT 3 position to change the number to -0500. |
| 7 |  | 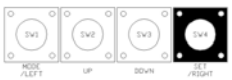 | Press and hold SET for approximately one second. After two flickers, the number will be saved as -0500 in the parameter. |
| 8 |  | 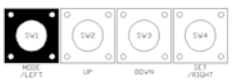 | Press and hold MODE for approximately one second to return to [P0-19]. |

**Note 1)** "▯" indicates flickering.
**Note 2)** If you hold down UP / DOWN at the current cursor in the parameter window, the number continues to increase/decrease.

## 4.1.4 Data Display

### (1) Binary

655 Minimum (0b00000)

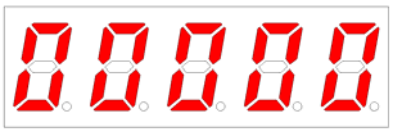

655 Maximum (0b11111)

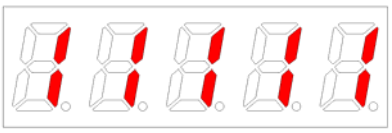

### (2) Hex

655 Minimum (0x0000)



655 Maximum (0xFFFF)

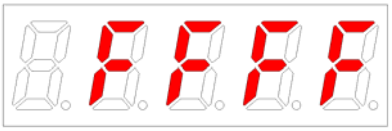

### (3) 16-bit Unsigned Integer

655 E.g.) 0



655 E.g.) +1234



### (4) 16-bit Signed Integer

655 ex) -1234

655 E.g.) -1234



② ex) +5678

655 E.g.) +5678



### (5) 16-bit Decimal Point Display

655 ex) -123.4

655 E.g.) -123.4



② ex) +123.4

655 E.g.) +123.4



## (6) 32-bit Signed Integer Data Display

- Minimum (-2147483648)

| Display upper two digits | Display middle four digits | Display lower four digits |
|---|---|---|
|  | 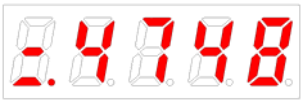 |  |

- Maximum (2147483647)

| Display upper two digits | Display middle four digits | Display lower four digits |
|---|---|---|
|  | 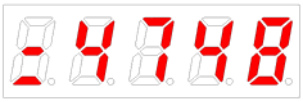 |  |

## ■ Example

[St-16]: Displayed as Upper = 0, Middle = 0012, and Lower = 2071

| Order | Loader Displays | Keys to Use | What to Do |
|---|---|---|---|
| 1 |  | 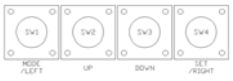 | Displays the speed control mode with main power and control power permitted. |
| 2 |  | 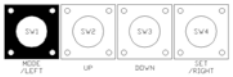 | Press MODE to move to [St-00]. |
| 3 | 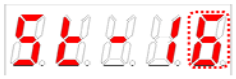 |  | Press UP or DOWN to move to [St-16]. |
| 4 |  |  | Press SET to display lower digit data. |
| 5 |  | 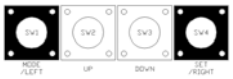 | Each time you press /LEFT or /RIGHT lower, middle, and upper data is displayed. |
| 6 |  |  | Each time you press /LEFT or /RIGHT lower, middle, and upper data is displayed. |
| 7 | 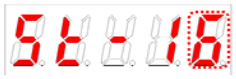 | 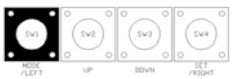 | Press and hold MODE for approximately one second to return to [St-16]. |

**Note 1)** " □ " indicates flickering.

## 4.1.5 External Input Contact Signal Display [St-14]

You can check whether the ON/OFF status of digital input/output signals that access the servo drive are on or off.

### (1) External Input Signal Display

The positions of the seven segment LEDs and CN1 connector pins correspond as follows.

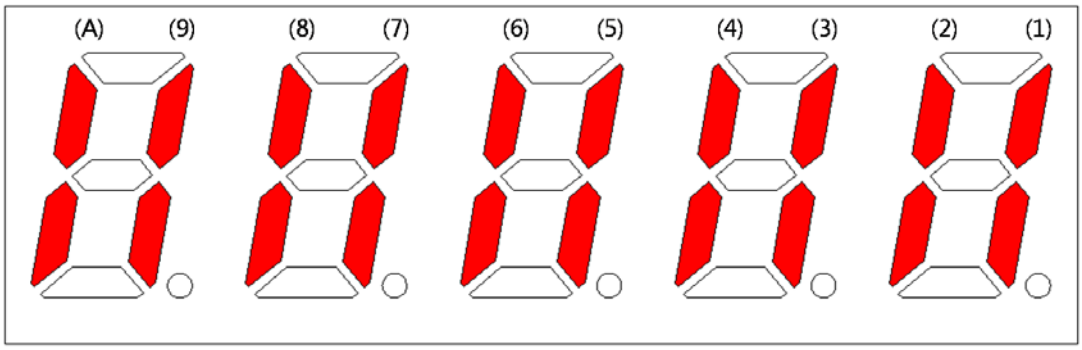


If an LED that corresponds to a pin is turned on/off, it indicates ON/OFF accordingly.

- Input Contact Display

| Number | (A) | (9) | (8) | (7) | (6) | (5) | (4) | (3) | (2) | (1) |
|---|---|---|---|---|---|---|---|---|---|---|
| **Contact sign** | **DIA** | **DI9** | **DI8** | **DI7** | **DI6** | **DI5** | **DI4** | **DI3** | **DI2** | **DI1** |
| CN1 Pin Number | 48 | 18 | 19 | 20 | 46 | 17 | 21 | 22 | 23 | 47 |
| Initial Allocation Signal Name | STOP | EMG | CWLIM | CCW LIM | DIR | ALM RST | SPD3 | SPD2 | SPD1 | SVON |

## 4.1.6 External Input Signal and Logic Definition

The following describes how to allocate input signals and how to view them.

### (1) Input Signal Allocation

In XDL-L7 drive, you can allocate a total of 19 input contact functions to 10 hardware-like contacts.

Each input contact function is positioned at certain DIGIT of parameter [P2-00], [P2-01], [P2-02], [P2-03] and [P2-04], and you can change the value of each DIGIT and allocate it to pin of DI1-DIA.

The default input signal allocation is shown in the figure below:

One number can be allocated to two input signals such as N (input signal): 1 (input allocation number).

E.g.) If SVON and SPD1 are allocated to DI #01, you can use both SVON and SPD1 signals when entering DI #01.

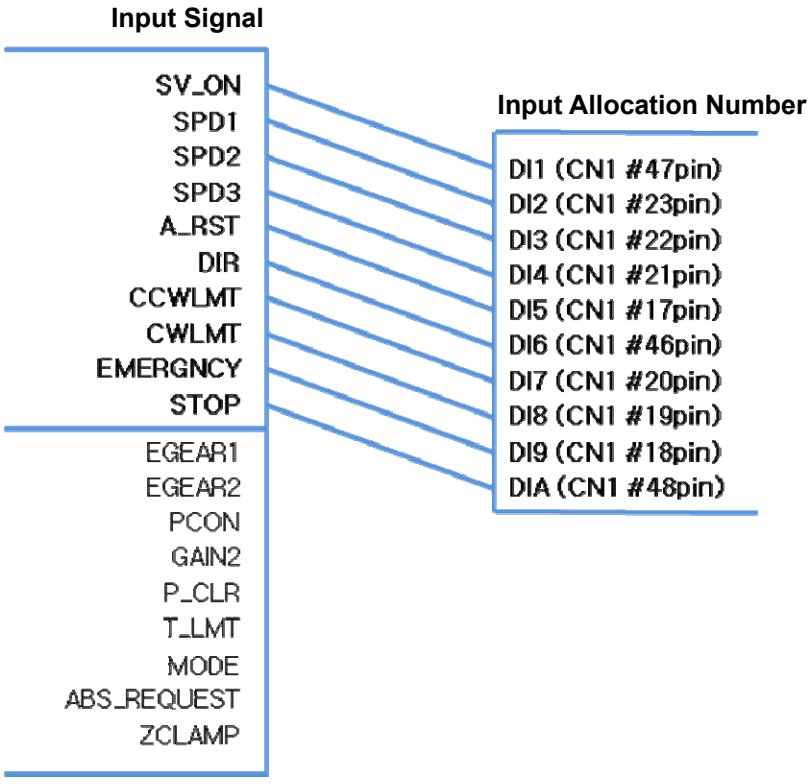


| ⚠ Caution |
| --- |
| If you change the input contact function, Since it is an immediate effect on the drive, you need to be careful for the operation.<br>Before change, recommended to be set 'EEPROM save no use' in DIGIT 5 of [P0-17] parameter<br>.. |

| Signal Name / Parameter Allocation | Input signal | Always Allocated | CN1 Pin Default Allocation Number | | | | | | | | | | No Allocation | Input Signal Definition | Default Value |
|---|---|---|---|---|---|---|---|---|---|---|---|---|---|---|---|
| | | | 48 | 18 | 19 | 20 | 46 | 17 | 21 | 22 | 23 | 47 | | | |
| Servo ON [P2-00].DIGIT1 setting | SVON | F | A | 9 | 8 | 7 | 6 | 5 | 4 | 3 | 2 | 1 | 0 | [P2-00] | 0x4321 |
| Multi-speed 1 [P2-00].DIGIT2 setting | SPD1 | F | A | 9 | 8 | 7 | 6 | 5 | 4 | 3 | 2 | 1 | 0 | | |
| Multi-speed 2 [P2-00].DIGIT3 setting | SPD2 | F | A | 9 | 8 | 7 | 6 | 5 | 4 | 3 | 2 | 1 | 0 | | |
| Multi-speed 3 [P2-00].DIGIT4 setting | SPD3 | F | A | 9 | 8 | 7 | 6 | 5 | 4 | 3 | 2 | 1 | 0 | | |
| Alarm reset [P2-01].DIGIT1 setting | ALMRST | F | A | 9 | 8 | 7 | 6 | 5 | 4 | 3 | 2 | 1 | 0 | [P2-01] | 0x8765 |
| Select rotation direction [P2-01].DIGIT2 setting | DIR | F | A | 9 | 8 | 7 | 6 | 5 | 4 | 3 | 2 | 1 | 0 | | |
| Forward rotation prohibited [P2-01].DIGIT3 setting | CCWLIM | F | A | 9 | 8 | 7 | 6 | 5 | 4 | 3 | 2 | 1 | 0 | | |
| Reverse rotation prohibited [P2-01].DIGIT4 setting | CWLIM | F | A | 9 | 8 | 7 | 6 | 5 | 4 | 3 | 2 | 1 | 0 | | |
| Emergency stop [P2-02].DIGIT1 setting | EMG | F | A | 9 | 8 | 7 | 6 | 5 | 4 | 3 | 2 | 1 | 0 | [P2-02] | 0x00A9 |
| Stop [P2-02].DIGIT2 setting | STOP | F | A | 9 | 8 | 7 | 6 | 5 | 4 | 3 | 2 | 1 | 0 | | |
| Electronic gear ratio 1 [P2-02].DIGIT3 setting | EGEAR1 | F | A | 9 | 8 | 7 | 6 | 5 | 4 | 3 | 2 | 1 | 0 | | |
| Electronic gear ratio 2 [P2-02].DIGIT4 setting | EGEAR2 | F | A | 9 | 8 | 7 | 6 | 5 | 4 | 3 | 2 | 1 | 0 | | |
| P control action [P2-03].DIGIT1 setting | PCON | F | A | 9 | 8 | 7 | 6 | 5 | 4 | 3 | 2 | 1 | 0 | [P2-03] | 0x0000 |
| Select gain 2 [P2-03].DIGIT2 setting | GAIN2 | F | A | 9 | 8 | 7 | 6 | 5 | 4 | 3 | 2 | 1 | 0 | | |
| Input pulse clear [P2-03].DIGIT3 setting | P_CLR | F | A | 9 | 8 | 7 | 6 | 5 | 4 | 3 | 2 | 1 | 0 | | |
| Torque limit [P2-03].DIGIT4 setting | T_LMT | F | A | 9 | 8 | 7 | 6 | 5 | 4 | 3 | 2 | 1 | 0 | | |
| Change operation modes [P2-04].DIGIT1 setting | MODE | F | A | 9 | 8 | 7 | 6 | 5 | 4 | 3 | 2 | 1 | 0 | [P2-04] | 0x0000 |
| Absolute encoder data request [P2-04].DIGIT2 setting | ABS_RQ | F | A | 9 | 8 | 7 | 6 | 5 | 4 | 3 | 2 | 1 | 0 | | |
| Zero clamp [P2-04].DIGIT3 setting | ZCLAMP | F | A | 9 | 8 | 7 | 6 | 5 | 4 | 3 | 2 | 1 | 0 | | |

**Note 1)** No CN1 connector pin is allocated when the default value is "0".

## (2) Example of Changing Input Signal Allocation

The input signal definition can be changed in [P2-00], [P2-01], [P2-02], [P2-03], and [P2-04].

The input signal logic definition can be changed in [P2-08] and [P2-09].

Allocate input signals as shown in the following table:

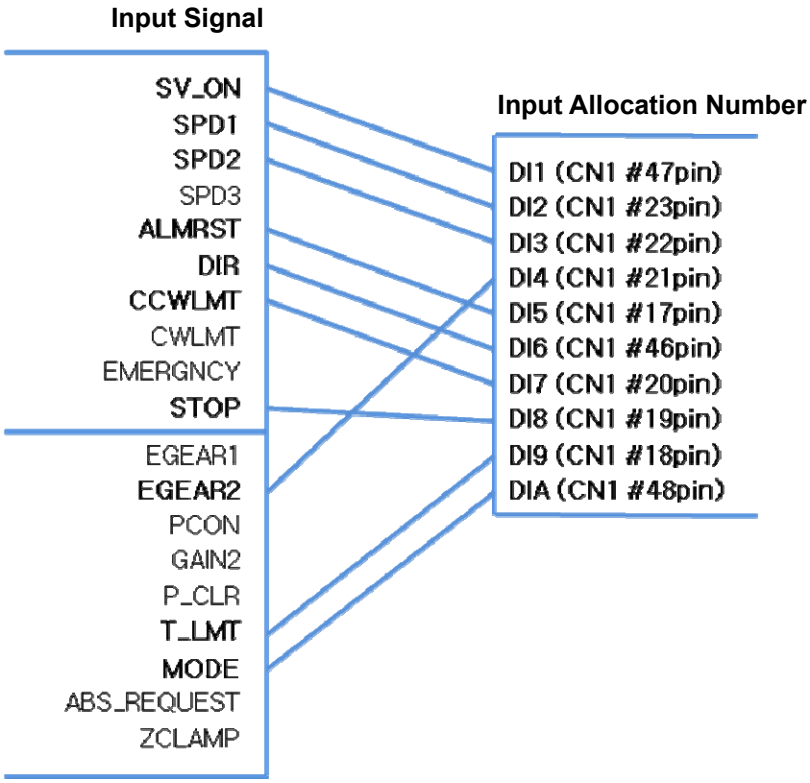

| Signal Name / Parameter Allocation | Input Signal | Always Allocated | CN1 Pin Default Allocation Number | | | | | | | | | | No Allocation | Input Signal Definition | Value After Changing |
|---|---|---|---|---|---|---|---|---|---|---|---|---|---|---|---|
| | | | 48 | 18 | 19 | 20 | 46 | 17 | 21 | 22 | 23 | 47 | | | |
| Servo ON [P2-00].DIGIT1 setting | SVON | F | A | 9 | 8 | 7 | 6 | 5 | 4 | 3 | 2 | **1** | 0 | [P2-00] | 0x0321 |
| Multi-speed 1 [P2-00].DIGIT2 setting | SPD1 | F | A | 9 | 8 | 7 | 6 | 5 | 4 | 3 | **2** | 1 | 0 | | |
| Multi-speed 2 [P2-00].DIGIT3 setting | SPD2 | F | A | 9 | 8 | 7 | 6 | 5 | 4 | **3** | 2 | 1 | 0 | | |
| Multi-speed 3 [P2-00].DIGIT4 setting | SPD3 | F | A | 9 | 8 | 7 | 6 | 5 | 4 | 3 | 2 | 1 | **0** | | |
| Alarm reset [P2-01].DIGIT1 setting | ALMRST | F | A | 9 | 8 | 7 | 6 | **5** | 4 | 3 | 2 | 1 | 0 | [P2-01] | 0x0765 |
| Select rotation direction [P2-01].DIGIT2 setting | DIR | F | A | 9 | 8 | 7 | **6** | 5 | 4 | 3 | 2 | 1 | 0 | | |
| Forward rotation prohibited [P2-01].DIGIT3 setting | CCWLIM | F | A | 9 | 8 | **7** | 6 | 5 | 4 | 3 | 2 | 1 | 0 | | |
| Reverse rotation prohibited [P2-01].DIGIT4 setting | CWLIM | F | A | 9 | 8 | 7 | 6 | 5 | 4 | 3 | 2 | 1 | **0** | | |
| Emergency stop [P2-02].DIGIT1 setting | EMG | F | A | 9 | 8 | 7 | 6 | 5 | 4 | 3 | 2 | 1 | **0** | [P2-02] | 0x0080 |
| Stop [P2-02].DIGIT2 setting | STOP | F | A | 9 | **8** | 7 | 6 | 5 | 4 | 3 | 2 | 1 | 0 | | |
| Electronic gear ratio 1 [P2-02].DIGIT3 setting | EGEAR1 | F | A | 9 | 8 | 7 | 6 | 5 | 4 | 3 | 2 | 1 | **0** | | |
| Electronic gear ratio 2 [P2-02].DIGIT4 setting | EGEAR2 | F | A | 9 | 8 | 7 | 6 | 5 | 4 | 3 | 2 | 1 | **0** | | |
| P control action [P2-03].DIGIT1 setting | PCON | F | A | 9 | 8 | 7 | 6 | 5 | 4 | 3 | 2 | 1 | **0** | [P2-03] | 0x9000 |
| Select gain 2 [P2-03].DIGIT2 setting | GAIN2 | F | A | 9 | 8 | 7 | 6 | 5 | 4 | 3 | 2 | 1 | **0** | | |
| Input pulse clear [P2-03].DIGIT3 setting | P_CLR | F | A | 9 | 8 | 7 | 6 | 5 | 4 | 3 | 2 | 1 | **0** | | |
| torque limit [P2-03].DIGIT4 setting | T_LMT | F | A | **9** | 8 | 7 | 6 | 5 | 4 | 3 | 2 | 1 | 0 | | |
| Change operation modes [P2-04].DIGIT1 setting | MODE | F | **A** | 9 | 8 | 7 | 6 | 5 | 4 | 3 | 2 | 1 | 0 | [P2-04] | 0x000A |
| Absolute encoder data request [P2-04].DIGIT2 setting | ABS_RQ | F | A | 9 | 8 | 7 | 6 | 5 | 4 | 3 | 2 | 1 | **0** | | |
| Zero clamp [P2-04].DIGIT3 setting | ZCLAMP | F | A | 9 | 8 | 7 | 6 | 5 | 4 | 3 | 2 | 1 | **0** | | |

**Note 1)** No CN1 connector pin is allocated when the default value is "0".

## ■ Example of Changing Input Signal Allocation

The following is an example of changing input signal allocation.

The allocation signals of SVON (CN1-47) and STOP (CN1-48) can be switched in the following sequence:

| | Before Changing | After Changing |
|---|---|---|
| [P2-00]: | 04321 | 0432A |
| [P2-02]: | 000A9 | 00019 |

| Order | Loader Displays | Keys to Use | What to Do |
|---|---|---|---|
| 1 | P2-00 |  | Press MODE to move to [P2-00]. |
| 2 | 04321 |  | Press SET to enter parameter edit mode. The parameter is displayed as 04321. |
| 3 | 0432A |  | Press UP or DOWN at the blinking cursor to change the number to 0432A. |
| 4 | 0432A |  | Hold down SET for approximately one second. After two flickers, the number is saved as 0432A for the parameter. |
| 5 | P2-00 |  | Hold down MODE for approximately one second to return to [P2-00]. |
| 6 | P2-02 | 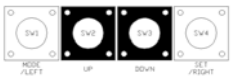 | Press UP or DOWN at the blinking cursor to change the number to P2-02. |
| 7 | 000A9 |  | Press SET to enter parameter edit mode. The parameter is displayed as 000A9. |
| 8 | 000A9 | 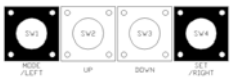 | Press /LEFT or /RIGHT at the blinking cursor to move to the desired digit, DIGIT 2. |
| 9 | 00019 | 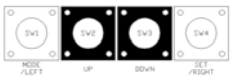 | Press UP or DOWN at the blinking cursor to change the number to 00019. |
| 10 | 00019 | 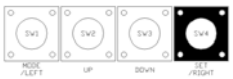 | Hold down SET for approximately one second. After two flickers, the number is saved as 00019 for the parameter. |
| 11 | P2-02 | 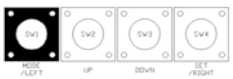 | Hold down MODE for approximately one second to return to [P2-02]. |
| 12 | ** Modification is not possible with the servo on. Reset the parameter. | | |
| ※ | In case of exiting without saving the set value |  | Hold down MODE for approximately one second to return to the parameter. |

**Note 1)** " □ " indicates flickering.

## (3) Input Signal Logic Definition

In XDL-L7 drive, you can define the logic of input signal through parameter [P2-08] and [P2-09], in terms of 10 hardware contacts ranging from DI1 to DIA.

The default logic state of input signal is as follows:

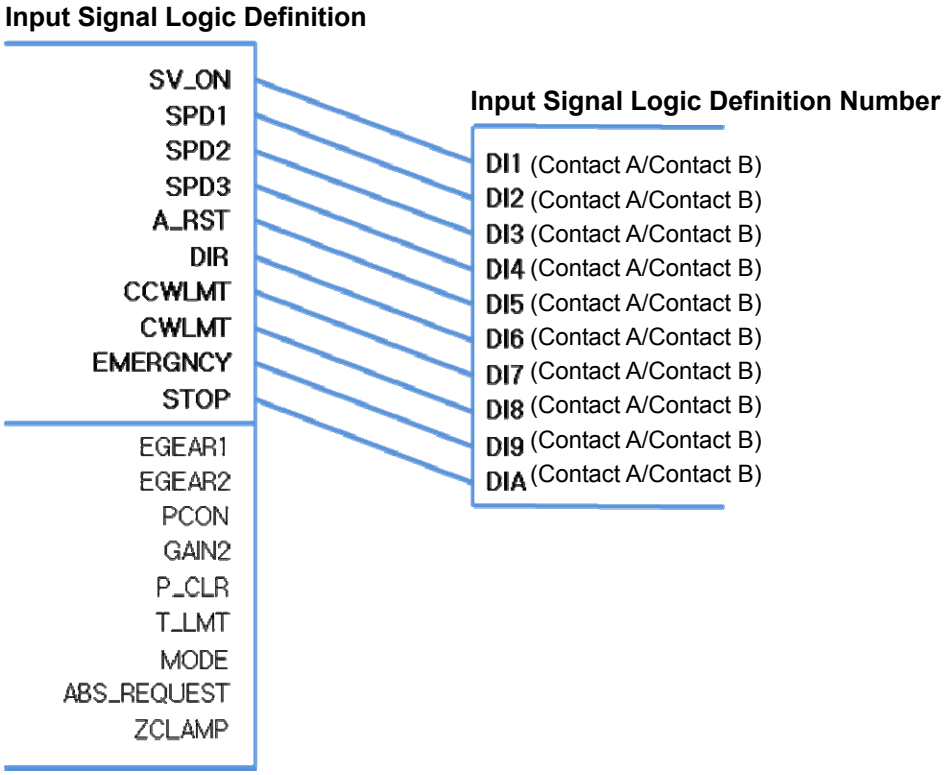

| Signal Name / Parameter Allocation | Input Signal (Initial Name) | CN1 Pin Default Allocation Number | | | | | | | | | | Contact B | Input Signal Logic Definition | Default Value |
|---|---|---|---|---|---|---|---|---|---|---|---|---|---|---|
| | | 48 | 18 | 19 | 20 | 46 | 17 | 21 | 22 | 23 | 47 | | | |
| Servo ON [P2-08].DIGIT1 setting | SVON | | | | | | | | | | 1 | 0 | [P2-08] | 0x11111 |
| Multi-speed 1 [P2-08].DIGIT2 setting | SPD1 | | | | | | | | | 1 | | 0 | | |
| Multi-speed 2 [P2-08].DIGIT3 setting | SPD2 | | | | | | | | 1 | | | 0 | | |
| Multi-speed 3 [P2-08].DIGIT4 setting | SPD3 | | | | | | | 1 | | | | 0 | | |
| Alarm reset [P2-08].DIGIT5 setting | ALMRST | | | | | | 1 | | | | | 0 | | |
| Select rotation direction [P2-09].DIGIT1 setting | DIR | | | | | 1 | | | | | | 0 | [P2-09] | 0x10001 |
| Forward rotation prohibited [P2-09].DIGIT2 setting | CCWLIM | | | | | | | | | | | 0 | | |
| Reverse rotation prohibited [P2-09].DIGIT3 setting | CWLIM | | | | | | | | | | | 0 | | |
| Emergency stop [P2-09].DIGIT4 setting | EMG | | | | | | | | | | | 0 | | |
| Stop [P2-09].DIGIT5 setting | STOP | 1 | | | | | | | | | | 0 | | |

**Note 1)** According to the input signal logic definition, contact A is 1 and contact B is 0.

## (4) Example of Changing Input Signal Logic Definition

The input signal logic definition can be changed in [P2-08] and [P2-09].

Allocate input signals as shown in the following table:

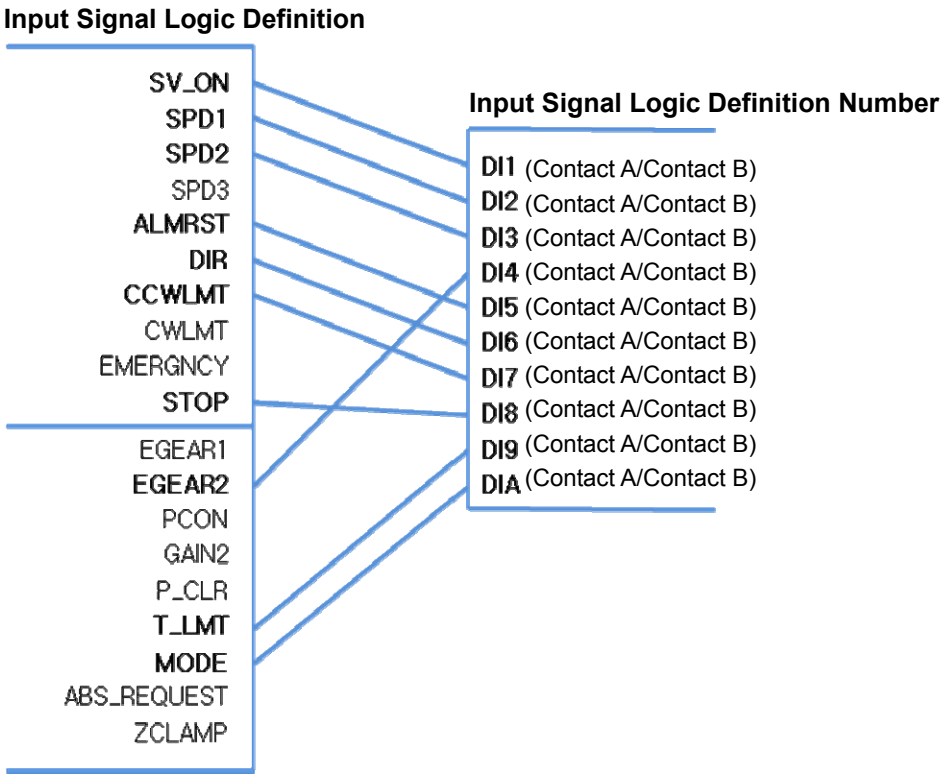

| Signal Name / Parameter Allocation | Input Signal | CN1 Pin Default Allocation Number | | | | | | | | | | Contact B | Input Signal Logic Definition | Default Value |
|---|---|---|---|---|---|---|---|---|---|---|---|---|---|---|
| | | 48 | 18 | 19 | 20 | 46 | 17 | 21 | 22 | 23 | 47 | | | |
| Servo ON [P2-08].DIGIT 1 setting | SVON | | | | | | | | | | 1 | 0 | [P2-08] | 0x11111 |
| Multi-speed 1 [P2-08].DIGIT 2 setting | SPD1 | | | | | | | | | 1 | | 0 | | |
| Multi-speed 2 [P2-08].DIGIT 3 setting | SPD2 | | | | | | | | 1 | | | 0 | | |
| Multi-speed 3 [P2-08].DIGIT 4 setting | EGEAR2 | | | | | | | 1 | | | | 0 | | |
| Alarm reset [P2-08].DIGIT 5 setting | ALMRST | | | | | | 1 | | | | | 0 | | |
| Select rotation direction [P2-09].DIGIT 1 setting | DIR | | | | | 1 | | | | | | 0 | [P2-09] | 0x11101 |
| Forward rotation prohibited [P2-09].DIGIT 2 setting | CCWLIM | | | | | | | | | | | 0 | | |
| Reverse rotation prohibited [P2-09].DIGIT 3 setting | STOP | | | 1 | | | | | | | | 0 | | |
| Emergency stop [P2-09].DIGIT 4 setting | T_LMT | | 1 | | | | | | | | | 0 | | |
| Stop [P2-09].DIGIT 5 setting | MODE | 1 | | | | | | | | | | 0 | | |

**Note 1)** According to the input signal logic definition, contact A is 1 and contact B is 0.

## ■ Example of Changing Input Signal Logic Definition

The following is an example of changing input signal logic.

You can change logic signal contact A of SVON (CN1-47) to contact B, and

change logic signal contact B of CCWLIM (CN1-20) to contact A in the following sequence:

| | Before Changing | After Changing |
|---|---|---|
| [P2-08]: | 11111 | 11110 |
| [P2-09]: | 10001 | 10011 |

| Order | Loader Displays | Keys to Use | What to Do |
|---|---|---|---|
| 1 | P2-08 | 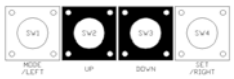 | Press UP or DOWN key at the blinking cursor to move to [P2-08]. |
| 2 | 1111 |  | Press SET to enter parameter edit mode. The parameter is displayed as 11111. |
| 3 | 1110 | 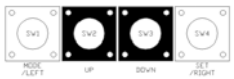 | Press UP or DOWN key at the blinking cursor to change the number to 11110. |
| 4 | 1110 |  | Hold down SET key for approximately one second. After two flickers, the number will be saved as 11110 for the parameter. |
| 5 | P2-08 | 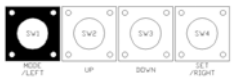 | Hold down MODE key for approximately one second to return to [P2-08]. |
| 6 | P2-09 |  | Press UP or DOWN key at the blinking cursor to change the number to P2-09. |
| 7 | 1001 | 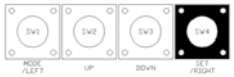 | Press SET to enter parameter edit mode. The parameter is displayed as 10001. |
| 8 | 1001 |  | Press /LEFT or /RIGHT at the blinking cursor to move to the desired digit, DIGIT 2. |
| 9 | 1001 |  | Press UP or DOWN key at the blinking cursor to change the number to 10011. |
| 10 | 1001 | 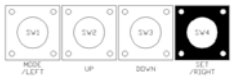 | Press and hold the SET key for approximately one second. After two flickers, the number will be saved as 10011 in the parameter. |
| 11 | P2-09 |  | Hold down MODE key for approximately one second to return to [P2-09]. |
| 12 | ** Modification is not possible with the servo on. Reset the parameter. | | |
| ※ | In case of exiting without saving the set value | 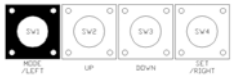 | Hold down MODE for approximately one second to return to the parameter. |

**Note 1)** " " indicates flickering.

# 4.1.7 External Output Contact Signal Display [St-15]

You can check whether the ON/OFF status of digital input/output signals that access the servo drive are on or off.

## (1) External Output Signal Display

The positions of the seven segment LEDs and CN1 connector pins correspond as follows.

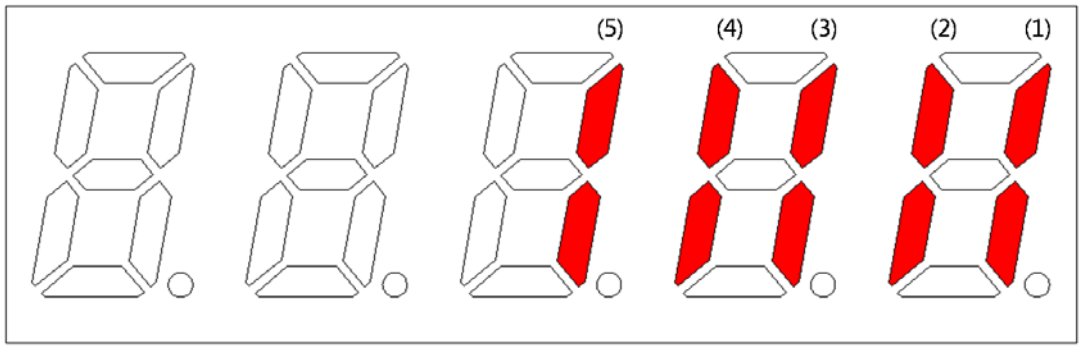


If an LED that corresponds to a pin is turned on/off, it indicates ON/OFF accordingly.

**Output Contact Display**

| Number | | | | | | (5) | (4) | (3) | (2) | (1) |
|---|---|---|---|---|---|---|---|---|---|---|
| Contact sign | | | | | | DO5 | DO4 | DO3 | DO2 | DO1 |
| CN1 pin number | | | | | | 45 | 44 | 43 | 40/41 | 38/39 |
| Initial allocation signal name | | | | | | INPOS | BRAKE | ZSPD | READY | ALARM |

# 4.1.8 External Output Signal and Logic Definition

The following explains output signal allocation and the method of checking allocation status.

## (1) Output Signal Allocation

- Output signal definition: [P2-05], [P2-06], [P2-07]
- Output signal logic definition: [P2-10]
- The default output signal allocation is as follows:

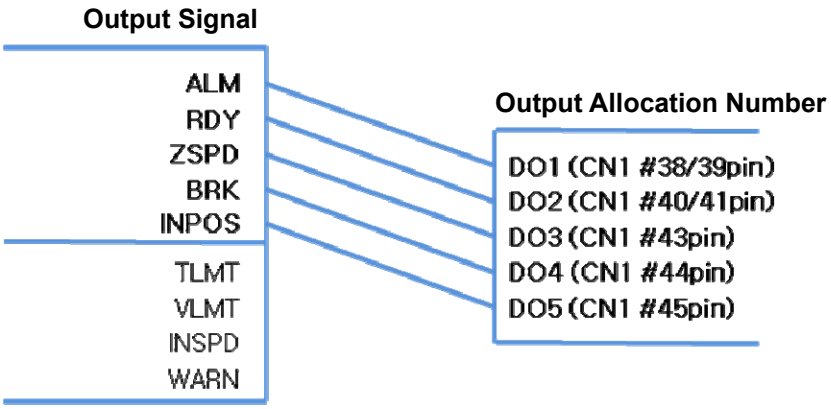


| Signal Name / Parameter Allocation | output signal | Always Allocated | CN1 Pin Default Allocation Number 45 | 44 | 43 | 40/41 | 38/39 | Not Allocated | Internal Parameter | Default Value |
|---|---|---|---|---|---|---|---|---|---|---|
| Alarm [P2-05].DIGIT1 setting | ALARM | F | 5 | 4 | 3 | 2 | 1 | 0 | [P2-05] | 0x4321 |
| Servo ready [P2-05].DIGIT2 setting | READY | F | 5 | 4 | 3 | 2 | 1 | 0 | | |
| Zero speed achieved [P2-05].DIGIT3 setting | ZSPD | F | 5 | 4 | 3 | 2 | 1 | 0 | | |
| Brake [P2-05].DIGIT4 setting | BRAKE | F | 5 | 4 | 3 | 2 | 1 | 0 | | |
| Position reached [P2-06].DIGIT1 setting | INPOS | F | 5 | 4 | 3 | 2 | 1 | 0 | [P2-06] | 0x0005 |
| Torque limit reached [P2-06].DIGIT2 setting | TLMT | F | 5 | 4 | 3 | 2 | 1 | 0 | | |
| Speed limit reached [P2-06].DIGIT3 setting | VLMT | F | 5 | 4 | 3 | 2 | 1 | 0 | | |
| Speed reached [P2-06].DIGIT4 setting | INSPD | F | 5 | 4 | 3 | 2 | 1 | 0 | | |
| Warning [P2-07].DIGIT1 setting | WARN | F | 5 | 4 | 3 | 2 | 1 | 0 | [P2-07] | 0x0000 |

**Note 1)** No CN1 connector pin is allocated when the default value is "0".

## (2) Example of Changing Output Signal Allocation

- The output signal definition can be changed in [P2-05], [P2-06], and [P2-07].
- The output signal logic definition can be changed in [P2-10].
- Allocate output signals as in the following table:

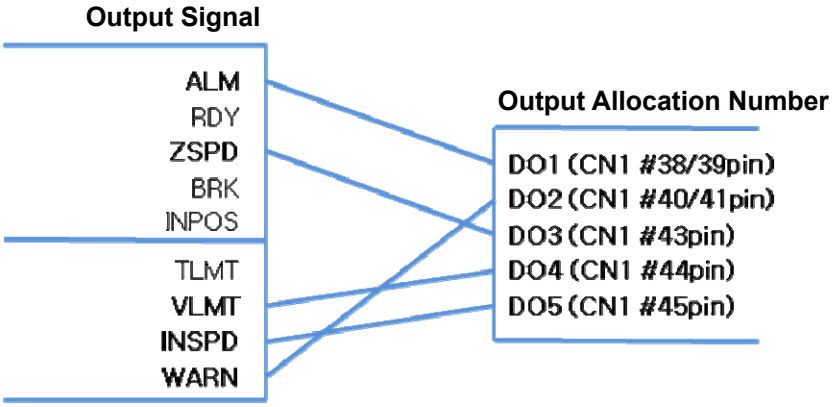


| Signal Name / Parameter Allocation | output signal | Always assignment | CN1 Pin Default Allocation Number 45 | 44 | 43 | 40/41 | 38/39 | Not Allocated | Internal Parameter | Value After Changing |
|---|---|---|---|---|---|---|---|---|---|---|
| Alarm [P2-05].DIGIT1 setting | ALARM | F | 5 | 4 | 3 | 2 | **1** | 0 | [P2-05] | 0x0301 |
| Servo ready [P2-05].DIGIT2 setting | READY | F | 5 | 4 | 3 | 2 | 1 | **0** | | |
| Zero speed achieved [P2-05].DIGIT3 setting | ZSPD | F | 5 | 4 | **3** | 2 | 1 | 0 | | |
| Brake [P2-05].DIGIT4 setting | BRAKE | F | 5 | 4 | 3 | 2 | 1 | **0** | | |
| Position reached [P2-06].DIGIT1 setting | INPOS | F | 5 | 4 | 3 | 2 | 1 | **0** | [P2-06] | 0x5400 |
| Torque limit reached [P2-06].DIGIT2 setting | TLMT | F | 5 | 4 | 3 | 2 | 1 | **0** | | |
| Speed limit reached [P2-06].DIGIT3 setting | VLMT | F | 5 | **4** | 3 | 2 | 1 | 0 | | |
| Speed reached [P2-06].DIGIT4 setting | INSPD | F | **5** | 4 | 3 | 2 | 1 | 0 | | |
| Warning [P2-07].DIGIT1 setting | WARN | F | 5 | 4 | 3 | **2** | 1 | 0 | [P2-07] | 0x0002 |

**Note 1)** No CN1 connector pin is allocated when the default value is "0".

## ■ Example of Changing Output Signal Allocation

The following is an example of output signal allocation change.

The allocation signals of ALARM (CN1-38/39) and ZSPD (CN1-43) can be switched in the following sequence:

Before Changing After Changing

[P2-05]: 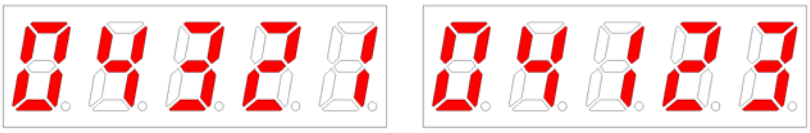

| Order | Loader Window Display Result | Keys to Use | What to Do |
|---|---|---|---|
| 1 |  | 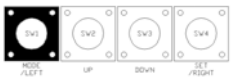 | Press MODE to move to [P2-05]. |
| 2 |  | 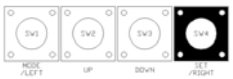 | Press SET to enter parameter edit mode. The parameter is displayed as 04321. |
| 3 |  | 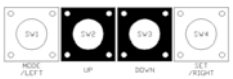 | Press UP or DOWN at the blinking cursor to change the number to 04323. |
| 4 |  | 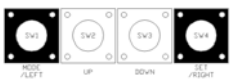 | Press /LEFT or /RIGHT at the blinking cursor to move to the desired digit, DIGIT 3. |
| 5 |  | 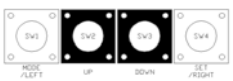 | Press UP or DOWN at the blinking cursor to change the number to 04123. |
| 6 |  | 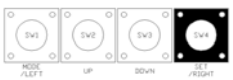 | Hold down SET for approximately one second. After two flickers, the number will be saved as 04123 for the parameter. |
| 7 | 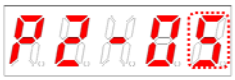 | 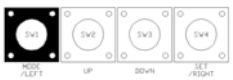 | Hold down MODE for approximately one second to return to [P2-05]. |
| 8 | ** Modification is not possible with the servo on. Reset the parameter. | | |
| ※ | In case of exiting without saving the set value |  | Hold down MODE for approximately one second to return to the parameter. |

**Note 1)** " " indicates flickering.

When two output signals are allocated to one number, the output contact setting error [AL-72] alarm triggers.

## (3) Output Signal Logic Definition

- Output signal logic definition: [P2-10]
- The default logic state of output signal is as follows:

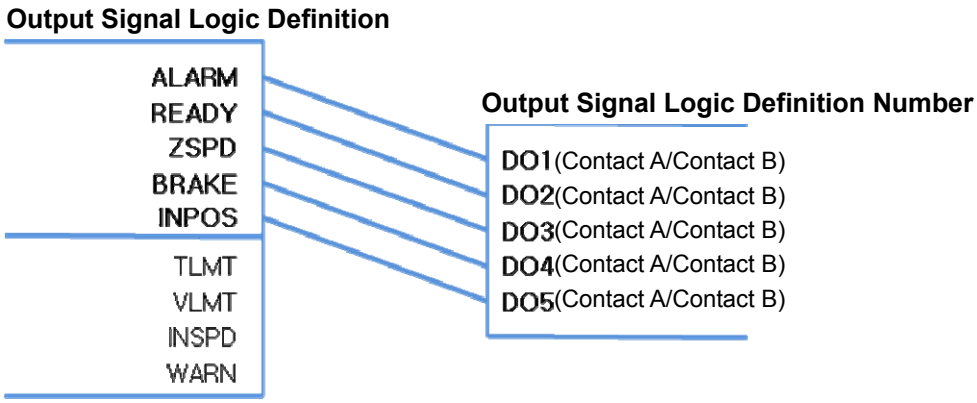


| Signal Name<br>Parameter Allocation | Input Signal (Initial Name) | CN1 Pin Default Allocation Number | | | | | Contact B | Output Signal Logic Definition | Default Value |
|---|---|---|---|---|---|---|---|---|---|
| | | 45 | 44 | 43 | 40 /41 | 38 /39 | | | |
| Alarm<br>[P2-10]. DIGIT1 setting | ALARM | | | | | | 0 | [P2-10] | 0x10110 |
| Servo ready<br>[P2-10]. DIGIT2 setting | READY | | | | 1 | | 0 | | |
| Zero speed achieved<br>[P2-10]. DIGIT3 setting | ZSPD | | | 1 | | | 0 | | |
| Brake<br>[P2-10]. DIGIT4 setting | BRAKE | | | | | | 0 | | |
| Position reached<br>[P2-10]. DIGIT5 setting | INPOS | 1 | | | | | 0 | | |

**Note 1)** According to the input signal logic definition, contact A is 1 and contact B is 0.

## (4) Example of Changing Output Signal Logic Definition

- The output signal logic definition can be changed in [P2-10].
- Allocate output signals as in the following table:

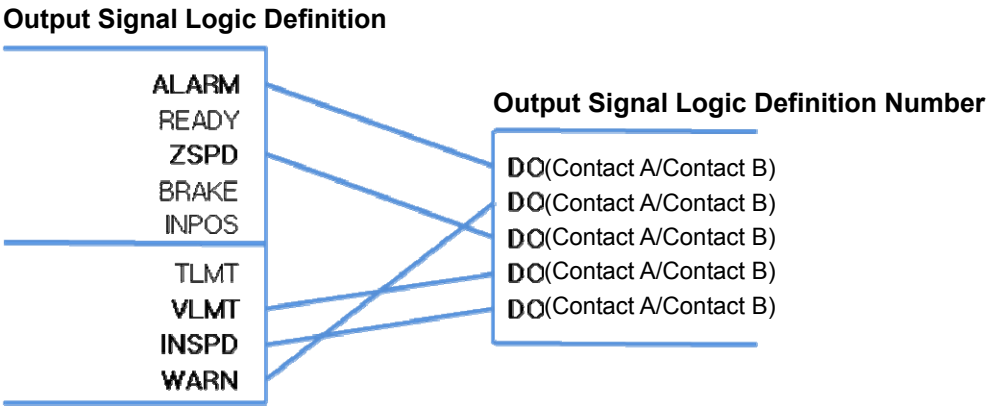


| Signal Name / Parameter Allocation | Input Signal (Initial Name) | CN1 Pin Default Allocation Number | | | | | Contact B | Output Signal Logic Definition | Default Value |
|---|---|---|---|---|---|---|---|---|---|
| | | 45 | 44 | 43 | 40 /41 | 38 /39 | | | |
| Alarm [P2-10]. DIGIT1 setting | ALARM | | | | | | 0 | [P2-10] | 0x11110 |
| Servo ready [P2-10]. DIGIT2 setting | READY | | | | 1 | | 0 | | |
| Zero speed achieved [P2-10]. DIGIT3 setting | ZSPD | | | 1 | | | 0 | | |
| Brake [P2-10]. DIGIT4 setting | BRAKE | | 1 | | | | 0 | | |
| Position reached [P2-10]. DIGIT5 setting | INPOS | 1 | | | | | 0 | | |

**Note 1)** According to the input signal logic definition, contact A is 1 and contact B is 0.

## ■ Example of Changing Output Signal Logic Definition

The following is an example of output signal allocation change.

The allocation signals of ALARM (CN1-38/39) and ZSPD (CN1-43) can be switched in the following sequence:

| | Before Changing | After Changing |
|---|---|---|
| [P2-05]: |  |  |

| Order | Loader Window Display Result | Keys to Use | What to Do |
|---|---|---|---|
| 1 | 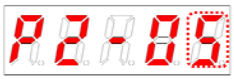 | 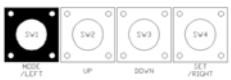 | Press MODE to move to [P2-05]. |
| 2 |  | 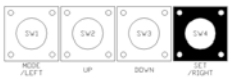 | Press SET to enter parameter edit mode. The parameter is displayed as 04321. |
| 3 |  | 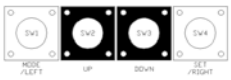 | Press UP or DOWN at the blinking cursor to change the number to 04323. |
| 4 |  | 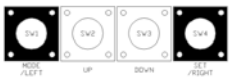 | Press /LEFT or /RIGHT at the blinking cursor to move to the desired digit, DIGIT 3. |
| 5 |  | 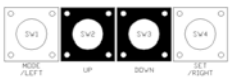 | Press UP or DOWN at the blinking cursor to change the number to 04123. |
| 6 |  | 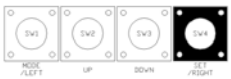 | Hold down SET for approximately one second. After two flickers, the number will be saved as 04123 for the parameter. |
| 7 |  | 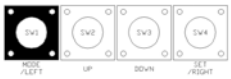 | Hold down MODE for approximately one second to return to [P2-05]. |
| 8 | ** Modification is not possible with the servo on. Reset the parameter. | | |
| ※ | In case of exiting without saving the set value | 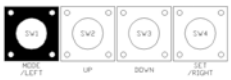 | Hold down MODE for approximately one second to return to the parameter. |

**Note 1)** " " indicates flickering.

When two output signals are allocated to one number, the output contact setting error [AL-72] alarm triggers.

# 4.2 Parameters

## 4.2.1 Parameter System

There are a total of eight groups of parameters. Each group is explained in the following table:

| Parameter Movement | Parameter Number | Initial Screen | Parameter group name | Details |
|---|---|---|---|---|
| MODE key | - | E.g.) In speed mode  | Status Summary Display | Displays the status summary of the servo. |
| | St-00 - St-27 |  | Status | Displays the operation status of the servo. |
| | P0-00 - P0-29 |  | System | Saves system configuration information. |
| | P1-00 - P1-27 |  | Control | Saves control-related parameters. |
| | P2-00 - P2-22 |  | IN / OUT | Saves parameters related to analog and digital input/output. |
| | P3-00 - P3-20 |  | Speed Operation | Saves speed operation parameters. |
| | P4-00 - P4-14 | 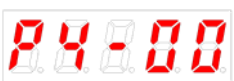 | Position Operation | Saves position pulse operation parameters. |
| | Cn-00 - Cn-17 | 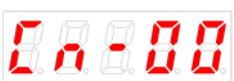 | Command | Performs operation handling. |

The following explains the acronyms related to application mode in the parameter:

- P: Use in position control mode.
- S: Use in speed control mode.
- T: Use in torque control mode.

Press MODE once to move to the next display mode.

## 4.2.2 Operation Status Display Parameter

For detailed information, refer to "4.3 Operation Status Display

"**" Parameter that cannot be modified with the servo ON but can reset power

."*" Parameter that cannot be modified with the servo ON

| Parameter | | Unit | Initial | Details | Applicable Mode |
|---|---|---|---|---|---|
| Code | Name | Minimum | Maximum | | |
| St-00 | Current Operation Status | - | - | Displays the current operation status.<br>DIGIT 5:<br>DIGIT 4: ZSPD, INPOS/INSPD, Command, READY<br>DIGIT 3-1: Run Status<br>(Details: Refer to "4.1.2 Status Summary Display.") | PST |
| | | 0 | 0 | | |
| St-01 | Current Operation Speed | RPM | 0 | Displays the current operation speed.<br>(Details: Refer to "4.3.2 Speed Display.") | PST |
| | | -10000 | 10000 | | |
| St-02 | Current Command Speed | RPM | 0 | Displays the current command speed.<br>(Details: Refer to "4.3.2 Speed Display.") | ST |
| | | -10000 | 10000 | | |
| St-03 | Following Position Pulse | Pulse | 0 | Displays the accumulated number of tracked position command pulses.<br>▪ Displays the accumulated number of position command pulses that followed as a result of rotation of the servo motor because the servo was turned on.<br>▪ If a number is lower than the minimum or higher than the maximum, it is displayed as the minimum or maximum.<br>(Details: Refer to "4.3.3 Position Display.") | P |
| | | -2^30 | 2^30 | | |
| St-04 | Position Command Pulse | Pulse | 0 | Displays the accumulated number of position command pulses.<br>▪ Displays the accumulated number of position command pulses that have been entered since the servo turned on.<br>(Details: Refer to "4.3.3 Position Display.") | P |
| | | -2^30 | 2^30 | | |
| St-05 | Remaining Position Pulse | Pulse | 0 | Displays the remaining position pulses that the servo has to operate.<br>▪ This displays the difference between command pulses and tracking pulses and the remaining position pulses for the servo to run.<br>▪ The remaining position pulses, which are displayed when the servo is off, are ignored when the servo turns on.<br>(Details: Refer to "4.3.3 Position Display.") | P |
| | | -2^30 | 2^30 | | |
| St-06 | Input Pulse Frequency | Kpps | 0.0 | Displays input pulse frequency. | P |
| | | -1000.0 | 1000.0 | | |
| St-07 | Current Operation Torque | [%] | 0.0 | Displays the current load factor against the rated load factor.<br>▪ Displays the load currently output by the servo motor as a percentage against the rated output. | T |
| | | -300.0 | 300.0 | | |
| St-08 | Current Command Torque | [%] | 0.0 | Displays the command load factor against the rated load factor.<br>▪ Displays the load currently output by the servo motor as a percentage against the rated output.<br>(Details: Refer to "4.3.4 Torque and Load Display.") | T |
| | | -300.0 | 300.0 | | |

| Parameter | | Unit | Initial | Details | Applicable Mode |
|---|---|---|---|---|---|
| Code | Name | Minimum | Maximum | | |
| St-09 | Accumulated Overload Rate | [%] | 0.0 | Displays the currently accumulated load factor against the maximum accumulated load factor as a percentage.<br>(Details: Refer to “4.3.4 Torque and Load Display.”) | PST |
| | | -300.0 | 300.0 | | |
| St-10 | Instantaneous Maximum Load Factor | [%] | 0.0 | Displays the instantaneous maximum load factor against the rated load factor.<br>▪ Displays, as a percentage, the maximum overload between the current time and the start of control set off when the servo turned on.<br>(Details: Refer to “4.3.4 Torque and Load Display.”) | PST |
| | | -300.0 | 300.0 | | |
| St-11 | Torque Limit | [%] | - | Displays the torque limit value.<br>▪ Displays, as a percentage, the maximum torque that the servo motor can output, against the rated torque.<br>(T_LMT contact ON: Analog torque input. T_LMT contact OFF: [P1-13] and [P1-14] values) | PST |
| | | -300.0 | 300.0 | | |
| St-12 | DC Link Voltage | V | 0.0 | Displays the current DC link voltage of the main power.<br>▪ The DC link voltage of the standard drive that uses 380 V is approximately 537 V.<br>▪ The maximum DC link voltage allowed for the standard drive that uses 380 V is 800 V.<br>▪ The excessive voltage alarm [AL-41] triggers when the DC link voltage threshold is exceeded because there is either too much or too little regenerative resistance.<br>▪ The normal DC link voltage in the regenerative section is 747 V or below.<br>(Details: Refer to “4.3.4 Torque and Load Display.”) | PST |
| | | 0.0 | 900.0 | | |
| St-13 | Regenerative Overload | [%] | 0.0 | Displays the regenerative overload rate. | PST |
| | | 0.0 | 20.0 | | |
| St-14 | Input Contact Status | - | - | Displays the input contact status that the servo recognizes.<br>(Details: Refer to “4.1.5 External Input Contact Signal Display.”) | PST |
| | | - | - | | |
| St-15 | Output Contact Status | - | - | Displays the output contact status that the servo outputs.<br>(Details: Refer to “4.1.6 External Input Contact Signal Display.”) | PST |
| | | - | - | | |
| St-16 | SingleTurn Data (Single Turn Data) | Pulse | 0 | Displays the single-turn data of the encoder in pulses. | PST |
| | | 0 | 2^30 | | |
| St-17 | Single-turn data (Degrees) | [°] | 0.0 | This displays the single-turn data of the encoder in degrees. | PST |
| | | 0.0 | 360.0 | | |
| St-18 | Multi-Turn Data | rev | 0 | This displays the multi-turn data for the encoder. | PST |
| | | -32768 | 32767 | | |

| Parameter | | Unit | Initial | Details | Applicable Mode |
|---|---|---|---|---|---|
| Code | Name | Minimum | Maximum | | |
| St-19 | Internal Temperature | [℃] | 0 | Displays the internal temperature sensor value. | PST |
| | Room temperature | 0 | 200 | | |
| St-20 | Rated Motor Speed | RPM | 0 | Displays the rated speed of the currently installed motor. | PST |
| | | 0 | 10000 | | |
| St-21 | Peak Motor Speed | RPM | 0 | Displays the maximum speed of the currently installed motor. | PST |
| | | 0 | 10000 | | |
| St-22 | Rated Motor Current | A | 0.00 | Displays the rated current of the currently installed motor. | PST |
| | | 0.00 | 655.35 | | |
| St-23 | Phase U Current Offset | mA | 0 | Displays the phase U current offset. | PST |
| | | -200 | 200 | | |
| St-24 | Phase V Current Offset | mA | 0 | Displays the phase V current offset. | PST |
| | | -200 | 200 | | |
| St-25 | Program Version | - | - | Displays the version of the currently installed program. (Details: Refer to “4.3.7 Software Version Display.”) | PST |
| | | - | - | | |
| St-26 | FPGA Version | - | - | This displays the version of the FPGA. | PST |
| | | - | - | | |
| St-27 | Analog Command Torque | % | 0 | Displays current analog command torque. | T |
| | | -3000 | 3000 | | |

## 4.2.3 System Parameters

For detailed information, refer to "4.4.1 System Parameter Setting."

"**" Parameter that cannot be modified with the servo ON but can reset power.

"*" Parameter that cannot be modified with the servo ON

| Parameter | | Unit | Initial | Details | Applicable Mode |
|---|---|---|---|---|---|
| Code | Name | Minimum | Maximum | | |
| **P0-00 | Motor ID | - | 999 | ▪ Serial Type Encoder: Reads the motor ID from the encoder and displays it.<br>▪ Quadrature Type Encoder: Sets motor ID directly.<br>▪ If the attempt to read motor data fails, the initial value is set to 999.<br>(Details: Refer to "4.4.1 System Parameter Setting.") | PST |
| | | 0 | 999 | | |
| **P0-01 | Encoder Type | - | 0 | ▪ Serial Type Encoder: Reads and displays from the encoder.<br>▪ Quadrature Type Encoder: Sets the value directly.<br>• 0: Quadrature type encoder<br>• 1: Serial encoder (-)<br>• 2: Serial encoder (12 bit)<br>• 3: Serial encoder (16 bit)<br>• 4: Serial encoder (20 bit)<br>• 5: Serial encoder (24 bit)<br>(Details: Refer to "4.4.1 System Parameter Setting.") | PST |
| | | 0 | 5 | | |
| **P0-02 | Encoder Pulse | ppr | 3000 | ▪ Serial Type Encoder: Reads the number of bits per turn from the encoder and displays it.<br>▪ Quadrature Type Encoder: Sets the number of encoder pulses directly.<br>(Details: Refer to "4.4.1 System Parameter Setting.") | PST |
| | | 1 | 30000 | | |
| *P0-03 | Select operation mode | - | 1 | Sets operation mode.<br>(0: Torque operation. 1: Speed operation. 2: Position operation. 3: Speed/position operation. 4: Torque/speed operation. 5: Torque/position operation.)<br>(Details: Refer to "4.4.1 System Parameter Setting.") | PST |
| | | 0 | 5 | | |
| **P0-04 | RS422 Communication Speed | bps | 0 | Sets communication speed for RS-422 communication.<br>▪ 0 : 9600 bps<br>▪ 1 : 19200 bps<br>▪ 2 : 38400 bps<br>▪ 3 : 57600 bps<br>(Details: Refer to "4.4.1 System Parameter Setting.") | PST |
| | | 0 | 3 | | |
| **P0-05 | System ID | - | 0 | Sets drive ID for communication.<br>▪ An ID can be given to the servo if USB communication, RS422 communication and BUS communication are used for communication with the servo.<br>▪ A unique ID can be given to the servo and used for individual communication with it.<br>(Details: Refer to "4.4.1 System Parameter Setting.") | PST |
| | | 0 | 99 | | |

| Parameter | | Unit | Initial | Details | Applicable Mode |
|---|---|---|---|---|---|
| Code | Name | Minimum | Maximum | | |
| P0-06 | Main Power Input Mode | - | 0b00 | Sets main power input.<br>DIGIT 1-> 0: Single-phase power<br>1: 3-phase power input<br>⚠ Caution: Using single-phase power may lower motor output.<br>⚠ DIGIT2 -> 0: Error in case of phase loss<br>1: Warning in case of phase loss | PST |
| | | 0b00 | 0b11 | | |
| P0-07 | RST checking time | ms | 20 | Sets the time to check main power phase loss. | PST |
| | | 0 | 5000 | | |
| P0-08 | Start-up Parameter | - | 0 | Sets the number for the operation status parameter that is displayed at the start.<br>(Details: Refer to “4.4.1 System Parameter Setting.") | PST |
| | | 0 | 25 | | |
| *P0-09 | Regenerative Overload Derating | [%] | 100 | This specifies the derating factor which checks for regenerative resistance overloads. The overload alarm triggers quickly when the derating value is set to 100% or below. | PST |
| | | 1 | 200 | | |
| **P0-10 | Regenerative Resistance Value | Ω | 0 | This specifies the resistance value for regenerative braking resistance. If set to 0, the default resistance value of the drive is used. | PST |
| | | 0 | 1000 | | |
| **P0-11 | Regenerative Resistance Capacity | W | 0 | This specifies the current capacity for regenerative resistance. If set to 0, a default resistance capacity embedded in the drive is used. | PST |
| | | 0 | 30000 | | |
| *P0-12 | Overload Check Base Load Factor | [%] | 100 | This indicates the load factor which triggers a continuous overload check. If it is set to 100 or less, then the overload check starts early and the overload alarm triggers early. | PST |
| | | 10 | 100 | | |
| P0-13 | Continuous Overload Warning Level | [%] | 50 | Indicates the level of continuous overload warning signal output. Outputs the warning signal when the percentage value against alarm trigger load factor is reached. | PST |
| | | 10 | 100 | | |
| *P0-14 | Encoder Output Pre-scale | - | 12000 | Sets the prescale for encoder output when the servo outputs an encoder signal to the outside.<br>(Details: Refer to “4.4.1 System Parameter Setting.") | PST |
| | | -2^21 | 2^21 | | |
| *P0-15 | PWM OFF Delay Time | ms | 10 | Sets the time to delay until the PWM signal actually goes off after the servo is turned off.<br>(Details: Refer to “4.4.1 System Parameter Setting.") | PST |
| | | 0 | 1000 | | |

| Parameter | | Unit | Initial | Details | Applicable Mode |
|---|---|---|---|---|---|
| Code | Name | Minimum | Maximum | | |
| *P0-16 | DB Control Mode | - | 0x0 | Specifies the DB control mode.<br>▪ 0: Hold after a DB stop<br>▪ 1: Release after a DB stop<br>▪ 2: Release after free run stop<br>▪ 3: Hold after a free run stop<br>(Details: Refer to “4.4.1 System Parameter Setting.") | PST |
| | | 0x0 | 0x3 | | |
| *P0-17 | Function Setting Bit | - | 0b00000 | Sets drive function per digit.<br>DIGIT 1 -> Sets the operation direction of the servo.<br>• 0: Foward (CCW), Reverse (CW)<br>• 1: Forward (CW), Reverse (CCW)<br>DIGIT 2 -> Sets the Servo Lock.<br>• 0: Do not use<br>• 1: Interpolation<br>DIGIT 3 -> Sets Open Collector Output.<br>• 0: Do not use<br>• 1: Interpolation<br>DIGIT 4 -> Sets Monitor Output Voltage.<br>• 0: -10V - +10V<br>• 1: 0-10V<br>DIGIT 5 -> Sets saving EEPROM communication.<br>• 0: Do not use<br>• 1: Interpolation<br>(Details: Refer to “4.4.1 System Parameter Setting.") | PST |
| | | 0b00000 | 0b11111 | | |
| P0-18 | DAC Output Mode | - | 0x3210 | Sets output mode for 1-2 analog output channels.<br>Sets CH0-CH1 from the bottom, HEX Code, in order.<br>▪ Output CH0 and CH1 as MONIT1 and MONIT2.<br>• 0 : Speed feedback [RPM]<br>• 1 : Speed command [RPM]<br>• 2 : Torque feedback [%]<br>• 3 : Torque command [%]<br>• 4 : Position command frequency [0.1 Kpps]<br>• 5 : Following error [pulse]<br>• 6 : DC link voltage [V]<br>• D: Speed command (user) [RPM]<br>• E: Torque command (user) [%]<br>(Details: Refer to “4.4.1 System Parameter Setting.") | PST |
| | | 0x0000 | 0xFFFF | | |
| P0-19 | DAC Output Offset 1 | Unit/V | 0 | Sets offset for 1-2 analog output channels.<br>• Speed: RPM<br>• Torque: [%]<br>• Position command frequency: 0.1 Kpps<br>• Position: Pulse<br>• DC Link: V<br>• Offset<br>(Details: Refer to “4.4.1 System Parameter Setting.") | PST |
| | | -1000 | 1000 | | |
| P0-20 | DAC Output Offset 2 | Unit/V | 0 | | |
| | | -1000 | 1000 | | |

| Parameter | | Unit | Initial | Details | Applicable Mode |
|---|---|---|---|---|---|
| Code | Name | Minimum | Maximum | | |
| P0-21 | Reserved | - | - | | |
| | | - | - | | |
| P0-22 | Reserved | Unit/V | 0 | | |
| | | -1000 | 1000 | | |
| P0-23 | DAC Output Scale 1 | Unit/V | 500 | Sets magnification for 1-2 analog output channels.<br>Sets magnification as setting Unit/V.<br>E.g.) Channel 1 scale 100 RPM: Output 100 RPM as 1 V.<br><br>(Details: Refer to “4.4.1 System Parameter Setting.") | PST |
| | | 1 | 10000 | | |
| P0-24 | DAC Output Scale 2 | Unit/V | 500 | | |
| | | 1 | 10000 | | |
| P0-25 | Reserved | | | | |
| | | | | | |
| P0-26 | Encoder Function Bit | | 0 | Multi turn encoder function setting<br>*0: Using as Multi turn mode with multi turn encoder.<br>*1: Using as Single turn mode with multi turn encoder. | PST |
| | | 0 | 1 | | |
| P0-27 | Phase U Current Offset Value | mA | 0 | Saves phase U current offset value. | PST |
| | | -9999 | 9999 | | |
| P0-28 | Phase V Current Offset Value | mA | 0 | Saves phase V current offset value. | PST |
| | | -9999 | 9999 | | |
| P0-29 | Phase W Current Offset Value | mA | 0 | Saves phase W current offset value. | |
| | | -9999 | 9999 | | |

# 4.2.4 Control Setting Parameter

For detailed information, refer to "4.4.2 Control Parameter Setting."

"**" Parameter that cannot be modified with the servo ON but can reset power.

"*" Parameter that cannot be modified with the servo ON

| Parameter | | Unit | Initial | Details | Applicable Mode |
|---|---|---|---|---|---|
| Code | Name | Minimum | Maximum | | |
| P1-00 | Inertia Ratio | [%] | 100 | Sets inertia ratio for load.<br>▪ Inertia ratio is considered 100 percent when there is no load from the motor. Because setting inertia ratio against load is an important control parameter for the operation of the servo, inertia ratio shall be set by calculating load inertia by the machine system and rotor inertia from the motor specification table.<br>▪ Setting an accurate inertia ratio is crucial for optimal servo operation.<br>(Details: Refer to "4.4.2 Control Parameter Setting.") | PST |
| | | 0 | 20000 | | |
| P1-01 | Position proportional gain 1 | Hz | 50 | Sets position control proportional gain 1.<br>(Details: Refer to "4.4.2 Control Parameter Setting.") | P |
| | | 0 | 500 | | |
| P1-02 | Position proportional gain 2 | Hz | 70 | Sets position control proportional gain 2.<br>(Details: Refer to "4.4.2 Control Parameter Setting.") | P |
| | | 0 | 500 | | |
| P1-03 | Position Command Filter Time Constant | ms | 0 | Sets the filter time constant for internal position command that reflects electronic gear ratio.<br>(Details: Refer to "4.4.2 Control Parameter Setting.") | P |
| | | 0 | 1000 | | |
| P1-04 | Position Feedforward Gain | [%] | 0 | Sets position feedforward control ratio.<br>(Details: Refer to "4.4.2 Control Parameter Setting.") | P |
| | | 0 | 100 | | |
| P1-05 | Position Feedforward Filter Time Constant | ms | 0 | Sets position feedforward control filter time constant.<br>(Details: Refer to "4.4.2 Control Parameter Setting.") | P |
| | | 0 | 1000 | | |
| P1-06 | Speed proportional gain 1 | rad/s | 400 | Sets speed control proportional gain 1.<br>(Details: Refer to "4.4.2 Control Parameter Setting.") | PS |
| | | 0 | 5000 | | |
| P1-07 | Speed proportional gain 2 | rad/s | 700 | Sets speed control proportional gain 2.<br>(Details: Refer to "4.4.2 Control Parameter Setting.") | PS |
| | | 0 | 5000 | | |
| P1-08 | Speed Integral Time Constant 1 | ms | 50 | Sets speed control integral time constant 1.<br>(Details: Refer to "4.4.2 Control Parameter Setting.") | PS |
| | | 1 | 1000 | | |
| P1-09 | Speed Integral Time Constant 2 | ms | 15 | Sets speed control integral time constant 2. | PS |
| | | 1 | 1000 | | |
| P1-10 | Speed Command Filter Time Constant | ms | 10 | Sets filter time constant for speed command values. | PS |
| | | 0 | 1000 | | |

| Parameter | | Unit | Initial | Details | Applicable Mode |
|---|---|---|---|---|---|
| Code | Name | Minimum | Maximum | | |
| P1-11 | Speed Feedback Filter Time Constant | 0.1ms | 5 | Sets filter time constant for speed search values.<br>(Details: Refer to “4.4.2 Control Parameter Setting.”) | PS |
| | | 0 | 1000 | | |
| P1-12 | Torque Command Filter Time Constant | ms | 10 | Sets filter time constant for torque command values.<br>(Details: Refer to “4.4.2 Control Parameter Setting.”) | PST |
| | | 0 | 1000 | | |
| P1-13 | Positive Torque Limit | [%] | 300 | Sets positive torque limit.<br>(Details: Refer to “4.4.2 Control Parameter Setting.”) | PST |
| | | 0 | 300 | | |
| P1-14 | Negative Torque Limit | [%] | 300 | Sets negative torque limit.<br>(Details: Refer to “4.4.2 Control Parameter Setting.”) | PST |
| | | 0 | 300 | | |
| P1-15 | Switching Mode | - | 0x00 | Sets gain switching mode. [0x0F (DIGIT 1)]<br>▪ 0: Only uses gain 1.<br>▪ 1: ZSPD automatic gain switching<br>In case of zero speed, switch from gain 1 to gain 2.<br>In the opposite case, switch from gain 2 to gain 1.<br>▪ 2: INPOS automatic gain switching<br>In case of IN position, switch from gain 1 to gain 2.<br>In the opposite case, switch from gain 2 to gain 1.<br>▪ 3: Manual gain switching<br>When the gain 2 contact is on, switch from gain 1 to gain 2.<br>In the opposite case, switch from gain 2 to gain 1. | PS |
| | | 0x00 | 0x43 | Sets P and PI control switching modes. [0xF0 (DIGIT 2)]<br>0: Only control PI.<br>▪ 1: Control P if the command torque is higher than the set torque [P1-24].<br>▪ 2: Control P if the command speed is higher than the set speed [P1-25].<br>▪ 3: Control P if the current acceleration is higher than the set torque [P1-26].<br>▪ 4: Control P if the current position error is higher than the set position error [P1-27].<br>▪ Control P if the PCON contact is on (highest priority).<br>(Details: Refer to “4.4.2 Control Parameter Setting.”)<br>(Details: Refer to “4.4.4 Input/Output Contact Parameter Setting.”) | |
| P1-16 | Gain Switching Time | ms | 1 | Sets gain switching time during operation.<br>When switching from gain 1 to gain 2 and from gain 2 to gain 1, switching is scheduled according to the set time. | PS |
| | | 1 | 100 | | |
| P1-17 | Resonance Aoidance Operation | - | 0 | Select whether to use the notch filter or not.<br>0: Do not use. 1: Interpolation<br>(Details: Refer to “4.4.2 Control Parameter Setting.”) | PST |
| | | 0 | 1 | | |

| Parameter | | Unit | Initial | Details | Applicable Mode |
|---|---|---|---|---|---|
| Code | Name | Minimum | Maximum | | |
| P1-18 | Resonance Avoidance Frequency | Hz | 300 | Sets resonance avoidance frequency.<br>(Details: Refer to “4.4.2 Control Parameter Setting.”) | PST |
| | | 0 | 1000 | | |
| P1-19 | Resonance Avoidance Range | Hz | 100 | Sets the scope of resonance avoidance frequency.<br>(Details: Refer to “4.4.2 Control Parameter Setting.”) | PST |
| | | 0 | 1000 | | |
| P1-20 | Auto Gain Tuning Speed | 100 RPM | 8 | Sets speed for automatic gain tuning run. | PST |
| | | 1 | 10 | | |
| P1-21 | Auto Gain Tuning Distance | - | 3 | Sets round-trip distance for automatic gain tuning run. | PST |
| | | 1 | 5 | | |
| P1-22 | Torque Control Speed Limiting Mode | - | 0 | Sets speed limit mode during torque control.<br>▪ 0: Limit to [P1-23]. 1: Motor Maximum Speed<br>▪ 2: Analog speed command<br>▪ 3: Limited to the smaller value between the value of [P1-23] and the analog speed command. | T |
| | | 0 | 3 | | |
| P1-23 | Speed Limit | RPM | 2000 | Sets speed limit when speed limit mode [P1-22] is 0 during torque control. | T |
| | | 0 | 10000 | | |
| P1-24 | P Control Switching Torque | % | 200 | When setting P and PI control switching mode [P1-15],<br>sets [0x10 (DIGIT 2)] P control switching torque. | PS |
| | | 0 | 300 | | |
| P1-25 | P Control Switching Speed | rpm | 50 | When setting P and PI control switching mode [P1-15],<br>sets [0x20 (DIGIT 2)] P control switching speed. | PS |
| | | 0 | 6000 | | |
| P1-26 | P Control Switching Acceleration | rpm/s | 1000 | When setting P and PI control switching mode [P1-15],<br>sets [0x30 (DIGIT 2)] P control switching acceleration. | PS |
| | | 0 | 5000 | | |
| P1-27 | P Control Switching Position Error | pulse | 2000 | When setting P and PI control switching mode [P1-15],<br>sets [0x40 (DIGIT 2)] P control switching position error. | PS |
| | | 0 | 10000 | | |

# 4.2.5 Input/Output Setting Parameter

For detailed information, refer to "4.4.3 Analog Input/Output Parameter Setting" and "4.4.4 Input/Output Contact Parameter Setting."

"**" Parameter that cannot be modified with the servo ON but can reset power.
"*" Parameter that cannot be modified with the servo ON

| Parameter | | Unit | Initial | Details | Applicable Mode |
|---|---|---|---|---|---|
| Code | Name | Minimum | Maximum | | |
| **P2-00 | Input signal definition 1 | - | 0x4321 | Allocates a CN1 connector pin for a digital input signal.<br>▪ State of initial input signal allocation<br>• [P2-00]DIGIT1 = SVON (DI1)<br>• [P2-00]DIGIT2 = SPD1 (DI2)<br>• [P2-00]DIGIT3 = SPD2 (DI3)<br>• [P2-00]DIGIT4 = SPD3 (DI4)<br>• [P2-01]DIGIT1 = ALMRST(DI5)<br>• [P2-01]DIGIT2 = DIR (DI6)<br>• [P2-01]DIGIT3 = CCWLIM (DI7)<br>• [P2-01]DIGIT4 = CWLIM (DI8)<br>• [P2-02]DIGIT1 = EMG (DI9)<br>• [P2-02]DIGIT2 = STOP (DIA)<br>• [P2-02]DIGIT3 = EGEAR1(**)<br>• [P2-02]DIGIT4 = EGEAR2(**)<br>• [P2-03]DIGIT1 = PCON(**)<br>• [P2-03]DIGIT2 = GAIN2(**)<br>• [P2-03]DIGIT3 = P_CLR(**)<br>• [P2-03]DIGIT4 = T_LMT(**)<br>• [P2-04]DIGIT1 = MODE(**)<br>• [P2-04]DIGIT2 = ABS_RQ(**)<br>• [P2-04]DIGIT3 = ZCLAMP(**)<br>(**) Unallocated signals<br>(Details: Refer to "4.1.6 External Input Signal and Logic Definition.") | PST |
| | | 0 | 0xFFFF | | |
| **P2-01 | Input signal definition 2 | - | 0x8765 | | |
| | | 0 | 0xFFFF | | |
| **P2-02 | Input signal definition 3 | - | 0x00A9 | | |
| | | 0 | 0xFFFF | | |
| **P2-03 | Input signal definition 4 | - | 0x0000 | | |
| | | 0 | 0xFFFF | | |
| **P2-04 | Input signal definition 5 | - | 0x0F00 | | |
| | | 0 | 0xFFFF | | |
| **P2-05 | Output signal definition 1 | - | 0x4321 | Allocate a CN1 connector pin for a digital output signal.<br>▪ State of initial output signal allocation<br>• [P2-05]DIGIT1 = ALARM (DO1)<br>• [P2-05]DIGIT2 = READY(DO2)<br>• [P2-05]DIGIT3 = ZSPD(DO3)<br>• [P2-05]DIGIT4 = BRAKE(DO4)<br>• [P2-06]DIGIT1 = INPOS(DO5)<br>• [P2-06]DIGIT2 = TLMT(**)<br>• [P2-06]DIGIT3 = VLMT(**)<br>• [P2-06]DIGIT4 = INSPD(**)<br>• [P2-07]DIGIT1 = WARN(**)<br>(**) Unallocated signals<br>(Details: Refer to "4.1.8 External Output Signal and Logic Definition.")<br>In case of dual allocation, the output contact setting error [AL-72] occurs. | PST |
| | | 0 | 0xFFFF | | |
| **P2-06 | Output signal definition 2 | - | 0x0005 | | |
| | | 0 | 0xFFFF | | |
| **P2-07 | Output signal definition 3 | - | 0x0000 | | |
| | | 0 | 0xFFFF | | |

| Parameter | | Unit | Initial | Details | Applicable Mode |
|---|---|---|---|---|---|
| Code | Name | Minimum | Maximum | | |
| **P2-08 | Input signal logic definition 1 | - | 0b11111 | Define CN1 connector logic for a digital input signal. ( 0: Contact B. 1: Contact A)<br>▪ Definition of initial input logic<br>• [P2-08]DIGIT1 = DI1(CN1 #47) (Contact A)<br>• [P2-08]DIGIT2 = DI2(CN1 #23) (Contact A)<br>• [P2-08]DIGIT3 = DI3(CN1 #22) (Contact A)<br>• [P2-08]DIGIT4 = DI4(CN1 #21) (Contact A)<br>• [P2-08]DIGIT5 = DI5(CN1 #17) (Contact A)<br>(Details: Refer to “4.1.6 External Input Signal and Logic Definition.”) | PST |
| | | 0 | 0b11111 | | |
| **P2-09 | Input signal logic definition 2 | - | 0b10001 | Define CN1 connector logic for a digital input signal. ( 0: Contact B. 1: Contact A)<br>▪ Definition of initial input logic<br>• [P2-09]DIGIT1 = DI6(CN1 #46) (Contact A)<br>• [P2-09]DIGIT2 = DI7(CN1 #20) (Contact A)<br>• [P2-09]DIGIT3 = DI8(CN1 #19) (Contact A)<br>• [P2-09]DIGIT4 = DI9(CN1 #18) (Contact A)<br>• [P2-09]DIGIT5 = DIA(CN1 #48) (Contact A)<br>(Details: Refer to “4.1.6 External Input Signal and Logic Definition.”) | PST |
| | | 0 | 0b11111 | | |
| **P2-10 | Output Signal Logic Definition | - | 0b10110 | Define CN1 connector logic for a digital output signal. ( 0 : Contact B. 1: Contact A)<br>• [P2-10]DIGIT1 = DO1(CN1 #38/39) (Contact B)<br>• [P2-10]DIGIT2 = DO2(CN1 #40/41) (Contact A)<br>• [P2-10]DIGIT3 = DO3(CN1 #43) (Contact A)<br>• [P2-10]DIGIT4 = DO4(CN1 #44) (Contact B)<br>• [P2-10]DIGIT5 = DO5(CN1 #45) (Contact A)<br>(Details: Refer to “4.1.8 External Output Signal and Logic Definition.”)<br>(Details: Refer to “4.4.4 Input/Output Parameter Setting.”) | PST |
| | | 0 | 0b11111 | | |
| P2-11 | Range of Output for Position Reached | Pulse | 10 | Sets remaining pulse range for position reached output in position operation mode.<br>(Details: Refer to “4.4.4 Input/Output Parameter Setting.”) | P |
| | | 1 | 65535 | | |
| P2-12 | Zero Speed Output Range | RPM | 10 | Sets speed range for zero speed output during a stop.<br>(Details: Refer to “4.4.4 Input/Output Parameter Setting.”) | PST |
| | | 1 | 500 | | |
| P2-13 | Range of Output for Speed Reached | RPM | 10 | Sets speed range for command speed reached output.<br>(Details: Refer to “4.4.4 Input/Output Parameter Setting.”) | S |
| | | 1 | 500 | | |
| P2-14 | Brake Output Action Speed | RPM | 100 | Sets speed for turning on the brake output contact.<br>(Details: Refer to “4.4.4 Input/Output Parameter Setting.”) | PST |
| | | 0 | 6000 | | |

| Parameter | | Unit | Initial | Details | Applicable Mode |
|---|---|---|---|---|---|
| Code | Name | Minimum | Maximum | | |
| P2-15 | Brake Output Delay Time | ms | 500 | Sets how much time to delay until the brake output contact turns on when the servo is off or stops.<br>(Details: Refer to “4.4.4 Input/Output Parameter Setting.”) | PST |
| | | 0 | 1000 | | |
| P2-16 | Position Pulse Clear Mode | - | 1 | Select operation type for position pulse clear (PCLR) mode.<br>• 0: Operate in edge mode.<br>• 1: Operate in level mode.<br>(Details: Refer to “4.4.4 Input/Output Parameter Setting.”) | P |
| | | 0 | 1 | | |
| *P2-17 | Analog Speed Scale | RPM | 2000 | Sets speed scale when the analog speed command is 10 V.<br>(Details: Refer to “4.4.3 Analog Input/Output Parameter Setting.”) | S |
| | | 1 | 6000 | | |
| P2-18 | Analog Speed Offset | mV | 0 | Sets offset for analog speed commands.<br>(Details: Refer to “4.4.3 Analog Input/Output Parameter Setting.”) | S |
| | | -1000 | 1000 | | |
| P2-19 | Zero Speed Clamp Speed | RPM | 0 | Sets speed range for the clamp operation of the analog zero speed command.<br>(Details: Refer to “4.4.3 Analog Input/Output Parameter Setting.”) | S |
| | Zero speed | 0 | 1000 | | |
| *P2-20 | Analog Torque Scale | [%] | 100 | Sets torque scale when the analog torque command is 10 V.<br>(Details: Refer to “4.4.3 Analog Input/Output Parameter Setting.”) | T |
| | | 1 | 350 | | |
| P2-21 | Analog Torque Command Offset | mV | 0 | Sets offset for analog torque commands.<br>(Details: Refer to “4.4.3 Analog Input/Output Parameter Setting.”) | T |
| | | -1000 | 1000 | | |
| P2-22 | Zero Torque Clamp Voltage | mV | 75 | Sets voltage range for the clamp operation of the analog zero torque command.<br>(Details: Refer to “4.4.3 Analog Input/Output Parameter Setting.”) | T |
| | | 0 | 1000 | | |

# 4.2.6 Speed Operation Setting Parameter

For detailed information, refer to "4.4.5 Speed Operation Parameter Setting."

"**" Parameter that cannot be modified with the servo ON but can reset power.
"*" Parameter that cannot be modified with the servo ON

<table>
<tr><th colspan="2">Parameter</th><th>Unit</th><th>Initial</th><th rowspan="2">Details</th></tr>
<tr><th>Code</th><th>Name</th><th>Minimum</th><th>Maximum</th></tr>
<tr><td rowspan="2">P3-00</td><td>Speed Command 1</td><td>RPM</td><td>10</td><td rowspan="16">Sets 1-6 speed commands based on the speed command input contact.<br><table><tr><th>SPD</th><th>SD2</th><th>SPD3</th><th>Speed Control</th></tr><tr><td>OFF</td><td>OFF</td><td>OFF</td><td>Analog speed command</td></tr><tr><td>ON</td><td>OFF</td><td>OFF</td><td>Digital speed command 1</td></tr><tr><td>OFF</td><td>ON</td><td>OFF</td><td>Digital speed command 2</td></tr><tr><td>ON</td><td>ON</td><td>OFF</td><td>Digital speed command 3</td></tr><tr><td>OFF</td><td>OFF</td><td>ON</td><td>Digital speed command 4</td></tr><tr><td>ON</td><td>OFF</td><td>ON</td><td>Digital speed command 5</td></tr><tr><td>OFF</td><td>ON</td><td>ON</td><td>Digital speed command 6</td></tr><tr><td>ON</td><td>ON</td><td>ON</td><td>Digital speed command 7</td></tr></table>(Details: Refer to "4.4.5 Speed Operation Parameter Setting.")</td></tr>
<tr><td></td><td>-6000</td><td>6000</td></tr>
<tr><td rowspan="2">P3-01</td><td>Speed Command 2</td><td>RPM</td><td>100</td></tr>
<tr><td></td><td>-6000</td><td>6000</td></tr>
<tr><td rowspan="2">P3-02</td><td>Speed Command 3</td><td>RPM</td><td>500</td></tr>
<tr><td></td><td>-6000</td><td>6000</td></tr>
<tr><td rowspan="2">P3-03</td><td>Speed Command 4</td><td>RPM</td><td>1000</td></tr>
<tr><td></td><td>-6000</td><td>6000</td></tr>
<tr><td rowspan="2">P3-04</td><td>Speed Command 5</td><td>RPM</td><td>1500</td></tr>
<tr><td></td><td>-6000</td><td>6000</td></tr>
<tr><td rowspan="2">P3-05</td><td>Speed Command 6</td><td>RPM</td><td>2000</td></tr>
<tr><td></td><td>-6000</td><td>6000</td></tr>
<tr><td rowspan="2">P3-06</td><td>Speed Command 7</td><td>RPM</td><td>3000</td></tr>
<tr><td></td><td>-6000</td><td>6000</td></tr>
<tr><td rowspan="2">P3-07</td><td>Phase Z Detection Operation Speed</td><td>RPM</td><td>10</td><td rowspan="2">Sets phase Z detection operation speed.</td></tr>
<tr><td></td><td>1</td><td>300</td></tr>
<tr><td rowspan="2">P3-08</td><td>Speed Command Acceleration Time</td><td>ms</td><td>0</td><td rowspan="2">Sets acceleration time for speed commands.<br>(Details: Refer to "4.4.5 Speed Operation Parameter Setting.")</td></tr>
<tr><td></td><td>0</td><td>10000</td></tr>
<tr><td rowspan="2">P3-09</td><td>Speed Command Deceleration Time</td><td>ms</td><td>0</td><td rowspan="2">Sets deceleration time for speed commands.<br>(Details: Refer to "4.4.5 Speed Operation Parameter Setting.")</td></tr>
<tr><td></td><td>0</td><td>10000</td></tr>
<tr><td rowspan="2">P3-10</td><td>Speed Command S-Curve Time</td><td>ms</td><td>10</td><td rowspan="2">Sets S-Curve time for speed commands.</td></tr>
<tr><td></td><td>1</td><td>100</td></tr>
<tr><td rowspan="2">*P3-11</td><td>Speed Operation Pattern</td><td>-</td><td>0</td><td rowspan="2">Sets acceleration/deceleration type for speed commands.<br>(0;Trapezoidal, 1;Sinusoidal)<br>(Details: Refer to "4.4.5 Speed Operation Parameter Setting.")</td></tr>
<tr><td></td><td>0</td><td>1</td></tr>
<tr><td rowspan="2">P3-12</td><td>Manual JOG operation speed</td><td>RPM</td><td>500</td><td rowspan="2">Sets operation speed for manual JOG operation [Cn-00].</td></tr>
<tr><td></td><td>-6000</td><td>6000</td></tr>
</table>

| Parameter | | Unit | Initial | Details |
|---|---|---|---|---|
| Code | Name | Minimum | Maximum | |
| P3-13 | Program JOG operation speed 1 | RPM | 0 | Sets operation speed/operation time for programs 1 to 4 during program JOG operation [Cn-01].<br>A test drive repeats step 1 to 4.<br>Sets operation speed ([P3-13]-[P3-16]) and operation time ([P3-17]-[P3-20]) for each step.<br><br>E.g.) Step 1 operation<br>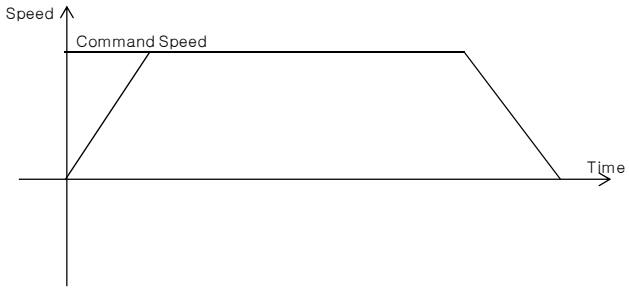<br> |
| | | -6000 | 6000 | |
| P3-14 | Program JOG operation speed 2 | RPM | 3000 | |
| | | -6000 | 6000 | |
| P3-15 | Program JOG operation speed 3 | RPM | 0 | |
| | | -6000 | 6000 | |
| P3-16 | Program JOG operation speed 4 | RPM | -3000 | |
| | | -6000 | 6000 | |
| P3-17 | Program JOG operation time 1 | ms | 500 | |
| | | 0 | 65535 | |
| P3-18 | Program JOG operation time 2 | ms | 5000 | |
| | | 0 | 65535 | |
| P3-19 | Program JOG operation time 3 | ms | 500 | |
| | | 0 | 65535 | |
| P3-20 | Program JOG operation time 4 | ms | 5000 | |
| | | 0 | 65535 | |

# 4.2.7 Position Operation Setting Parameter

For detailed information, refer to "4.4.6 Position Operation Parameter Setting."

"**" Parameter that cannot be modified with the servo ON but can reset power.
"*" Parameter that cannot be modified with the servo ON

| Parameter | | Unit | Initial | Details |
|---|---|---|---|---|
| Code | Name | Minimum | Maximum | |
| **P4-00 | Position Input Pulse Logic | - | 0 | Sets logic for position operation input pulses.<br>- The type of position command input pulses and rotation direction per logic are as follows:<br>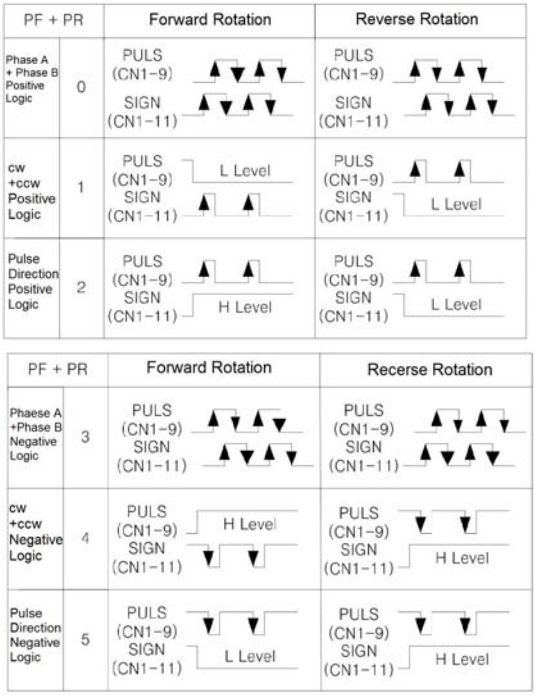<br><br>E.g.) Relation between direction signals and rotation directions when the position pulse input logic is set to 2.<br>When the direction signal is low: Reverse rotation (CW/clockwise)<br>When the direction signal is high: Forward rotation (CCW/counterclockwise)<br>(Details: Refer to "4.4.6 Position Operation Parameter Setting.") |
| | | 0 | 5 | |

<table>
<tr><th colspan="2">Parameter</th><th>Unit</th><th>Initial</th><th rowspan="2">Details</th></tr>
<tr><th>Code</th><th>Name</th><th>Minimum</th><th>Maximum</th></tr>
<tr><td rowspan="2">*P4-01</td><td>Electronic Gear Ratio Numerator 1</td><td>-</td><td>1000</td><td rowspan="16">Sets electronic gear ratio numerator/denominator 0, 1, 2, and 3.<br><table><tr><th>EGEAR1</th><th>EGEAR 2</th><th>Electric Gear Ratio Numerator / Denominator</th><th>Electric Gear Ratio</th></tr><tr><td rowspan="2">OFF</td><td rowspan="2">OFF</td><td>Electronic gear ratio numerator 0</td><td rowspan="2">Electronic gear ratio 1</td></tr><tr><td>Electronic Gear Ratio Denominator 0</td></tr><tr><td rowspan="2">ON</td><td rowspan="2">OFF</td><td>Electronic gear ratio numerator 1</td><td rowspan="2">Electronic gear ratio 2</td></tr><tr><td>Electronic gear ratio denominator 1</td></tr><tr><td rowspan="2">OFF</td><td rowspan="2">ON</td><td>Electronic gear ratio numerator 2</td><td rowspan="2">Electronic gear ratio 3</td></tr><tr><td>Electronic gear ratio denominator 2</td></tr><tr><td rowspan="2">ON</td><td rowspan="2">ON</td><td>Electronic gear ratio numerator 3</td><td rowspan="2">Electronic gear ratio 4</td></tr><tr><td>Electronic gear ratio denominator 3</td></tr></table>▪ The electronic gear ratio is the numerator/denominator form of the relation between the position command input pulse and the motor encoder pulse. It is important to set the ratio so that there is no error during position operation.<br>(Details: Refer to “4.4.6 Position Operation Parameter Setting.”)</td></tr>
<tr><td></td><td>1</td><td>2^21</td></tr>
<tr><td rowspan="2">*P4-02</td><td>Electronic Gear Ratio Numerator 2</td><td>-</td><td>1000</td></tr>
<tr><td></td><td>1</td><td>2^21</td></tr>
<tr><td rowspan="2">*P4-03</td><td>Electronic Gear Ratio Numerator 3</td><td>-</td><td>1000</td></tr>
<tr><td></td><td>1</td><td>2^21</td></tr>
<tr><td rowspan="2">*P4-04</td><td>Electronic gear ratio numerator 4</td><td>-</td><td>1000</td></tr>
<tr><td></td><td>1</td><td>2^21</td></tr>
<tr><td rowspan="2">*P4-05</td><td>Electronic Gear Ratio Denominator 1</td><td>-</td><td>1000</td></tr>
<tr><td></td><td>1</td><td>32767</td></tr>
<tr><td rowspan="2">*P4-06</td><td>Electronic Gear Ratio Denominator 2</td><td>-</td><td>2000</td></tr>
<tr><td></td><td>1</td><td>32767</td></tr>
<tr><td rowspan="2">*P4-07</td><td>Electronic Gear Ratio Denominator 3</td><td></td><td>3000</td></tr>
<tr><td></td><td>1</td><td>32767</td></tr>
<tr><td rowspan="2">*P4-08</td><td>Electronic Gear Ratio Denominator 4</td><td>-</td><td>4000</td></tr>
<tr><td></td><td>1</td><td>32767</td></tr>
<tr><td rowspan="2">P4-09</td><td>Electronic Gear Ratio Mode</td><td>-</td><td>0</td><td rowspan="2">Select an electronic gear ratio mode.<br>▪ 0: Select electronic gear ratio 1-4.<br>▪ 1: Override offset [P4-10] on the electronic gear ratio numerator 0.<br>(Details: Refer to “4.4.6 Position Operation Parameter Setting.”)</td></tr>
<tr><td></td><td>0</td><td>1</td></tr>
<tr><td rowspan="2">P4-10</td><td>Electric Gear Ratio Numerator Offset</td><td>-</td><td>0</td><td rowspan="2">Sets the offset of the electronic gear ratio numerator 0.<br>The offset will be set on the electronic gear ratio numerator 0.<br>▪ EGEAR1 contact LOW -> HIGH<br>: Increase the electronic gear ratio numerator by 1.<br>▪ EGEAR2 contact LOW -> HIGH<br>: Decrease the electronic gear ratio numerator by 1)<br>(Details: Refer to “4.4.6 Position Operation Parameter Setting.”)</td></tr>
<tr><td></td><td>-32767</td><td>32767</td></tr>
<tr><td rowspan="2">P4-11</td><td>Position Error</td><td>Pulse</td><td>90000</td><td rowspan="2">Sets range for triggering the position error alarm.<br>(Details: Refer to “4.4.4 Input/Output Contact Parameter Setting.”)</td></tr>
<tr><td></td><td>1</td><td>2^30</td></tr>
<tr><td rowspan="2">P4-12</td><td>Limit Contact Function</td><td>-</td><td>0</td><td rowspan="2">Select the operation type of position command pulse clear for CWLIM and CCWLIM contacts.<br>▪ 0: When the CCWLIM / CWLIM contact is on, receive an input pulse and save it to buffer.<br>▪ 1: Ignore any input pulse when the CCWLIM / CWLIM contact is on.</td></tr>
<tr><td>Function</td><td>0</td><td>1</td></tr>
</table>

| Parameter | | Unit | Initial | Details |
|---|---|---|---|---|
| Code | Name | Minimum | Maximum | |
| P4-13 | Backlash Compensation | - | 0 | Sets backlash compensation in position operation.<br>Sets backlash compensation by converting the amount of backlashes to number of pulses if the position changes because of backlashes caused by position operation.<br>Sets in the opposite direction according to the amount of backlashes.<br>(Details: Refer to “4.4.6 Position Operation Parameter Setting.”) |
| | | 0 | 10000 | |
| P4-14 | Pulse Input Filter | - | 3 | Sets filter frequency according to pulse input.<br>▪ 0: Do not use any filter.<br>▪ 1 : 500Khz (Min)<br>▪ 2 : 750Khz<br>▪ 3 : 1Mhz (Default)<br>▪ 4 : 1.25Mhz<br>Determination of the above frequency bands is based on input pulse width in terms of digital filter's characteristics. |
| | | 0 | 4 | |

# 4.2.8 Operation Handling Parameter

"**" Parameter that cannot be modified with the servo ON but can reset power.
"*" Parameter that cannot be modified with the servo ON

| Parameter | | Unit | Initial | Details |
|---|---|---|---|---|
| Code | Name | Minimum | Maximum | |
| Cn-00 | Manual JOG Operation | - | - | The drive performs manual JOG operation by itself.<br>(Refer to "Chapter 5 Handling and Operation.")<br>▪ [MODE]: Finish<br>▪ [UP]: Forward rotation (CCW)<br>▪ [DOWN]: Reverse rotation (CW)<br>▪ [SET]: Servo ON/OFF<br><br>Related parameters are as follows.<br>▪ [P3-08]: Speed command acceleration time<br>▪ [P3-09]: Speed command deceleration time<br>▪ [P3-10]: Speed command S-curve<br>▪ [P3-11]: Speed operation pattern<br>▪ [P3-12]: JOG operation speed<br><br>Operate regardless of the contact input status of CN1.<br>(Details: Refer to "4.4.5 Speed Operation Parameter Setting.")<br>(Details: Refer to "5.2 Handling.") |
| | | - | - | |
| Cn-01 | Program JOG Operation | - | - | Continuously operates according to the program already set.<br>▪ [SET]: Program JOG run or stop<br><br>Related parameters are as follows:<br>▪ [P3-08]: Speed command acceleration time<br>▪ [P3-09]: Speed command deceleration time<br>▪ [P3-10]: Speed command S-curve<br>▪ [P3-11]: Speed operation pattern<br>▪ [P3-13~16]: Program operation speed 1 to 4<br>▪ [P3-17~20]: Program operation time 1 to 4<br><br>Operate regardless of the contact input status of CN1.<br>(Details: Refer to "4.4.5 Speed Operation Parameter Setting.")<br>(Details: Refer to "5.2 Handling.") |
| | | - | - | |
| Cn-02 | Alarm Reset | - | - | Reset the alarm that went off.<br>(Details: Refer to "5.2 Handling.") |
| | | - | - | |

| Parameter | | Unit | Initial | Details |
|---|---|---|---|---|
| Code | Name | Minimum | Maximum | |
| Cn-03 | Get Alarm History | - | - | Check the saved alarm code history.<br>[UP] or [DOWN]: Reads alarm codes.<br><br>▪ E.g.) Recent first history [AL-42]: RST_PFAIL occurs.<br>• 01: Latest alarm<br>• 20: 20th previous alarm<br><br>(Details: Refer to "5.2 Handling.") |
| | | - | - | |
| Cn-04 | Alarm History Reset | - | - | Deletes the entire saved alarm code history.<br>(Details: Refer to "5.2 Handling.") |
| | | - | - | |
| Cn-05 | Auto Gain Tuning | - | - | Performs automatic gain tuning operation.<br><br>Related parameters are as follows.<br>▪ [P1-22]: Auto gain tuning speed<br>▪ [P1-23]: Auto gain tuning distance<br><br>(Details: Refer to "5.2 Handling.") |
| | | - | - | |
| Cn-06 | Phase Z Detection Operation | - | - | Perform phase Z detection.<br><br>▪ [SET]: Mode entering and servo ON status<br>▪ [UP]: Phase Z forward search<br>▪ [DOWN]: Phase Z reverse search<br><br>Related parameters are as follows.<br>▪ [P3-07]: Sets Z-phase detection operation speed [RPM].<br><br>(Details: Refer to "5.2 Handling.") |
| | | - | - | |
| Cn-07 | Input Contact Forced ON/OFF | - | - | Forcibly turns on/off the input contact temporarily.<br>▪ [UP]: (A),(8),(6),(4), and (2) signals forced ON/OFF<br>▪ [DOWN]: (9),(7),(5),(3), and (1) signals forced ON/OFF<br>▪ [MODE]: Move to another digit.<br>(Details: Refer to "5.2 Handling.") |
| | | - | - | |
| Cn-08 | Output Contact Forced ON/OFF | - | - | Forcibly turns on/off the output contact temporarily.<br>▪ [UP]: (4) and (2) signals forced ON/OFF<br>▪ [DOWN]: (5),(3), and (1) signals forced ON/OFF<br>▪ [MODE]: Move to another digit.<br>(Details: Refer to "5.2 Handling.") |
| | | - | - | |
| Cn-09 | Parameter Initialization | - | - | Reset parameter data.<br>(Details: Refer to "5.2 Handling.") |
| | | - | - | |

| Parameter | | Unit | Initial | Details |
|---|---|---|---|---|
| Code | Name | Minimum | Maximum | |
| Cn-10 | Auto Speed Command Offset Correction | - | - | Calibrates the offset of analog speed commands automatically.<br><br>The possible voltage setting ranges from -1V to 1V.<br>If offset voltage exceeds this range, oVrnG is displayed and there is no correction.<br><br>You can check the calibrated offset in the analog speed command offset [P2-18].<br><br>(Details: Refer to "5.2 Handling.") |
| | | - | - | |
| Cn-11 | Auto Torque Command Offset Correction | - | - | Calibrates the offset of analog torque commands automatically.<br><br>The possible voltage setting ranges from -1V to 1V.<br>If offset voltage exceeds this range, oVrnG is displayed and there is no correction.<br><br>You can check the calibrated offset in the analog torque command offset [P2-21].<br><br>(Details: Refer to "5.2 Handling.") |
| | | - | - | |
| Cn-12 | Manual Speed Command Offset Correction | - | - | Calibrates the offset of analog speed commands manually.<br><br>The possible voltage setting ranges from -1V to 1V.<br>If offset voltage exceeds this range, oVrnG is displayed and there is no correction.<br><br>You can check the calibrated offset in the analog speed command offset [P2-18].<br><br>(Details: Refer to "5.2 Handling.") |
| | | - | - | |
| Cn-13 | Manual Torque Command Offset Correction | - | - | Calibrate the offset of analog torque commands manually.<br><br>The possible voltage range is from +1 V to -1 V.<br>If offset voltage exceeds this range, oVrnG is displayed and there is no correction.<br><br>You can check the corrected offset in the analog torque command offset [P2-21].<br><br>(Details: Refer to "5.2 Handling.") |
| | | - | - | |

| Parameter | | Unit | Initial | Details |
|---|---|---|---|---|
| Code | Name | Minimum | Maximum | |
| Cn-14 | Absolute Encoder Reset | - | - | Resets the absolute encoder.<br>(Details: Refer to "5.2 Handling.") |
| | | - | - | |
| Cn-15 | Instantaneous Maximum Load Factor Reset | - | - | Reset the instantaneous maximum load factor to 0.<br>▪ [UP]: Displays the + forward maximum load factor.<br>▪ [DOWN]: Displays the - direction maximum load factor.<br>▪ [SET]: Initializes the maximum load factor.<br>(Details: Refer to "5.2 Handling.") |
| | | - | - | |
| Cn-16 | Parameter Lock | - | - | Sets parameter lock.<br>[UP]: UnLock<br>[DOWN]: Lock<br>(Details: Refer to "5.2 Handling.") |
| | | - | - | |
| Cn-17 | Current Offset | - | - | Saves current offset value to parameter P0-27 - P0-28.<br>(Details: Refer to "5.2 Handling.") |
| | | - | - | |

# 4.3 Operation Status Display

## 4.3.1 Status Display [St-00]

Refer to "4.1.2 Status Summary Display."

## 4.3.2 Speed Display

1. Current operation speed [St-01]

   This displays the current operation speed in RPM.

2. Current command speed [St-02]

   Displays the current command speed in RPM.

## 4.3.3 Position Display

1. Tracking position pulse [St-03]

   Displays the accumulated number of position command pulses that followed as a result of rotation of the servo motor because the servo was turned on.

2. Position command pulse [St-04]

   Displays the accumulated number of position command pulses that have been entered since the servo turned on.

3. Remaining position pulse [St-05]

   - This displays the difference between command pulses and tracking pulses and the remaining position pulses for the servo to run.
   - The remaining position pulses delayed while the servo is off are ignored when it is turned on.

4. Input pulse frequency [St-06]

   This displays the input pulse frequency.

## 4.3.4 Torque and Load Display

1. Current operation torque [St-07]

   This displays the energy (load) output by the servo motor as a percentage of the rated output.

2. Current command torque [St-08]

   This uses the servo's control algorithm to calculate the internal torque command and display it as a percentage of the rated torque.

3. Accumulated overload rate [St –09]

   This displays the current energy (load) as a percentage of the rated energy (load) of the servo motor.

4. Instantaneous maximum load factor [St–10]

   Displays the maximum (peak) load between the current time and the start of control after the servo is turned on as a percentage of the rated output.

5. Torque limit [St –11]

   This displays the maximum torque that the servo motor can output as a percentage of the rated torque.

6. DC link voltage [St–12]

   - The DC link voltage of the standard drive that uses 380 V is approximately 537 V.
   - The maximum DC link voltage allowed for the standard drive that uses 380 V is 800 V.
   - The overvoltage alarm [AL-41] triggers when the DC link voltage threshold is exceeded because there is either too much or too little regenerative resistance.
   - The normal DC link voltage in the regenerative section is 747 V or below.

7. Regenerative overload [St–13]

   This displays the overload rate relative to the regenerative capacity of the servo drive.

## 4.3.5 I/O Status Display

1. CN1 I/O input contact point status [St-14]

   Refer to "4.1.4 External Input Contact Point Signal Display [St-14]."

2. CN1 I/O output contact status [St-15]

   Refer to "4.1.6 External Output Contact Signal Display [St-15]."

## 4.3.6 Miscellaneous Status and Data Display

1. Single-turn data (pulse) display [St-16]

   Displays the single-turn data of the encoder in pulses.

2. Single-turn data (degree) display [St-17]

   Displays the single-turn data of the encoder in degrees.

3. Multi-turn data display [St-18]

   This displays the multi-turn data for the encoder.

4. Inside temperature display [St-19]

   This displays the temperature sensor value of the servo drive in ℃.

5. Rated motor speed display [St-20]

   This displays the rated speed of the motor in RPM.

6. Peak motor speed display [St-21]

   This displays the peak speed of the motor in RPM.

7. Rated motor current display [St-22]

   This displays the rated current of the motor in A.

8. U phase current offset display [St-23]

   This displays the U phase current offset in mA.

9. V phase current offset display [St-24]

   This displays the V phase current offset in mA.

## 4.3.7 Version Display

1. Software version display [St-25]

   Displays the version of the currently installed software.

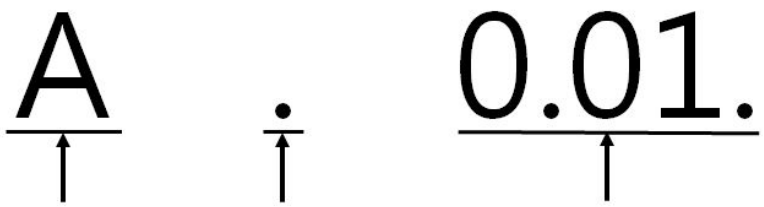


Encoder Type | Rated Voltage | Version Number | Drive Capacity

| Character | Encoder Type |
|---|---|
| A | Quad |
| B | Serial |

| Display | Rated Voltage Type |
|---|---|
| Dot | 400V |
| None | 200V |

| Number | Drive Capacity |
|---|---|
| 0 | Default |
| 1 | 100 [W] |
| 2 | 200 [W] |
| 3 | 400 [W] |
| 4 | 750 [W] |
| 5 | 1 [kW] |
| 6 | 2 [kW] |
| 7 | 3.5 [kW] |
| 8 | 5 [kW] |
| 9 | 7.5 [kW] |
| A | 15 [kW] |

# 4.4 Parameter Setting

## 4.4.1 Setting System Parameters

**1.** Motor ID setting [P0-00]

- Serial encoder: Reads the motor ID from the encoder and displays it.
- Incremental encoder: Sets motor ID directly.

**2.** Encoder settings

- Encoder type [P0-01]

| Number | Encoder Type | | Encoder Type |
|---|---|---|---|
| 0 | Quadrature type incremental encoder | 1 | Serial type encoder (-) |
| 2 | Serial type abs encoder (12 bit) | 3 | Serial type abs encoder (16 bit) |
| 4 | Serial type abs encoder (20 bit) | 5 | Serial type abs encoder (24 bit) |

※ The bits in parentheses in the previous table indicate peak multi-turn data.

- Encoder pulse [P0-02]

  Set this pulse when using an incremental encoder. Set the number of pulses per turn for a signal. For a serial encoder, encoder data are set directly.

**3.** Operation mode setting [P0-03]: Sets operation mode of the servo.

| Operation Modes | Operation Method |
|---|---|
| 0 | Torque control operation |
| 1 | Speed control operation |
| 2 | Position control operation |
| 3 | Mode contact ON: Position control operation<br>Mode contact OFF: Speed control operation |
| 4 | Mode contact ON: Speed control operation<br>Mode contact OFF: Torque control operation |
| 5 | Mode contact ON: Position control operation<br>Mode contact OFF: Torque control operation |

**4.** System ID setting

An ID can be given to the servo if RS422 communication and BUS communication are used for communication with the servo. Communication-related options are required in this case.

- Communication speed setting [P0-04]

  You can select the baud rate, the communication speed of RS422.

  - 0: 9600 bps
  - 1: 19200 bps
  - 2: 38400 bps
  - 3: 57600 bps

- System ID [P0-05]

  A unique ID can be given to the servo and used for individual communication with it.

**5.** Main power input mode setting [P0-06]

Specifies the main power input mode and the processing mode if phase loss occurs.

- DIGIT 1: Sets the main power input type.

  (0: Single-phase power input. 1: Three-phase power input.)

- DIGIT 2: Sets how to handle errors and warnings in case of main power phase loss.

  (0: Error in case of main power phase loss. 1: Warning in case of main power phase loss.)

**6.** RST checking time setting [P0-07]

Specifies the monitoring interval for main power phase losses.

**7.** Start-up display parameter setting [P0-08]

- You can set the parameter applicable initially when the servo is turned on.
- There are 26 values available for setting, from [St-00] to [St-25]. Choose one for a specific parameter.

**8.** Regenerative overload derating factor setting [P0-09]

This specifies the derating factor which checks for regenerative resistance overloads. If the derating value is 100% or less, then the overload alarm trigger time is proportional to the set value.

**9.** Regenerative resistance value setting [P0-10]

This specifies the resistance value for regenerative braking resistance. If it is set to 0, then it uses the default resistance capacity embedded in the drive.

**10.** Regenerative resistance capacity setting [P0-11]

This specifies the current capacity for regenerative resistance. If it is set to 0, then it uses the default resistance capacity embedded in the drive.

**11.** Overload check default load factor setting [P0-12]

This indicates the load factor which triggers a continuous overload check. If it is set to 100 or less, then the overload check starts early and the overload alarm triggers early.

**12.** Overload warning level setting [P0-13]

This specifies the level for the continuous overload warning signal output. The warning signal is issued when it reaches the setting of the percentage value relative to the alarm trigger value.

**13.** Encoder pulse pre-scale output (Encoder output pre-scale [P0-14])

When an encoder signal is output from the servo to the outside, its output pulse is pre-scaled as a pre-defined value

(encoder output prescale [P0-14]) before output.

- E.g.) In a motor with encoder 3,000 ppr

  Set pre-scale value (pulse output pre-scale [P0-14] = 12000)

  => Encoder pulse output: 3,000 ppr × 4 = 12,000 ppr

**14.** PWM OFF delay time setting [P0-15]

Sets the time span between servo OFF command and actual PWM OFF. This is to prevent the motor from slipping down the vertical axis until the motor brake comes into effect after receiving the

servo off command and then the brake signal. Set a PWM off delay when operating the motor brake with the output contact point brake signal. (range: 0-1000 ms, initial value: 10).

**15.** DB control mode [P0-16]: Specifies the DB control mode.

- 0: Hold after DB stop
- 1: Release after a DB stop
- 2: Release after free run stop
- 3: Hold after a free run stop

**16.** Servo function setting bit [P0-17]

Sets drive function per digit.

- DIGIT 1 -> Sets the operation direction of the servo.
  - 0: CCW (Clockwise), CW (Counterclockwise)
  - 1: CW (Clockwise), CCW (Counterclockwise)
- DIGIT 2 -> Sets servo lock.
  - 0: Do not use
  - 1: Use (When analog speed command is 0 in speed operation mode, the operation mode switches to position operation mode temporarily to ensure that motor remains stopped firmly.)
- DIGIT 3 -> Sets Open Collector Output
  - 0: Do not use
  - 1: Use (AL0, AL1, AL2 output contact -> Open Collector A, B, Z output)
- DIGIT 4 -> Sets Monitor Output Voltage. (Applicable to both Monitor 1 and 2)
  - 0 : -10-+10V
  - 1: 0-+10V
- DIGIT 5 -> Sets saving EEPROM communication.
  - 0 : Do not use
  - 1: Use (No parameter is saved to EEPROM when you write the parameter via communication.)

**17.** DAC Output Setting

There are four kinds of DAC output, each of which is made every 200 usec according to the condition of used data.

- DAC output type [P0-18 DIGIT 1, DIGIT 2]

| Type | Data Content | Type | Data Content |
|---|---|---|---|
| 0 | Speed feedback [RPM] | 5 | Following error [pulse] |
| 1 | Speed command [RPM] | 6 | DC link voltage [V] |
| 2 | Torque feedback [%] | D | Speed command (user) [RPM] |
| 3 | Torque command [%] | E | Torque command (user) [%] |
| 4 | Position command frequency [0.1 Kpps] | | |

- DAC output scale [P0-23], [P0-24]

  If the output value is too low or too high, output ratio can be adjusted.

  Sets magnification [Unit/V] for analog output channels 1 to 2.

  (Speed [RPM], torque [%], position command frequency [0.1 Kpps], position [pulse], DC link [V])

  Example: Channel 1 scale 100 =>100 RPM is output as 1 V.

- DAC output offset [P0-19], [P0-20]

  Sets offset [Unit/V] for 1-2 analog output channels.

  (Speed [RPM], torque [%], position command frequency [0.1 Kpps], position [pulse], DC_Link [V])

## 4.4.2 Control Parameters

The control parameter setting sequence is as follows:

- Load inertia ratio [P1-00] setting: Refer to “5.2.6 Auto Gain Tuning [Cn-05].”
- Position proportional gain [P1-01] and [P1-02] adjustment:

  Increase the gain so that the servo motor does not overshoot or lose control (do not use during speed operations or torque operations).

- Speed proportional gain [P1-06] and [P1-07] adjustment:

  Increase the gain so that the servo motor does not vibrate.

- Speed integral time constant [P1-08] and [P1-09] adjustment:

  Refer to the following table and set it according to the speed proportional gain.

### (1) Inertia Ratio Setting [P1-00]

This sets the inertia ratio by calculating the load inertia from the machine system and rotor inertia listed on the motor specification table.

The inertia/load ratio is an important control parameter for the operation of the servo. It is crucial to set the correct inertia ratio for optimal servo operation.

- The following table outlines the recommended control gain for different inertia ratios:

| Motor Flange | Inertia Ratio | | Gain Range | | |
|---|---|---|---|---|---|
| | Category | Inertia (Multiple) | Position Proportional Gain | Speed Proportional Gain | Speed Integral Gain |
| 40 ~ 80 | Low inertia | 1 ~ 5 | 40 ~ 90 | 400 ~ 1000 | 10 ~ 40 |
| | Medium inertia | 5 ~ 20 | 20 ~ 70 | 200 ~ 500 | 20 ~ 60 |
| | High inertia | 20 ~ 50 | 10 ~ 40 | 100 ~ 300 | 50 ~ 100 |

* You can tune the inertia ratio during a test drive if it is too hard to calculate the inertia ratio before operation.

## (2) Position Control Gain

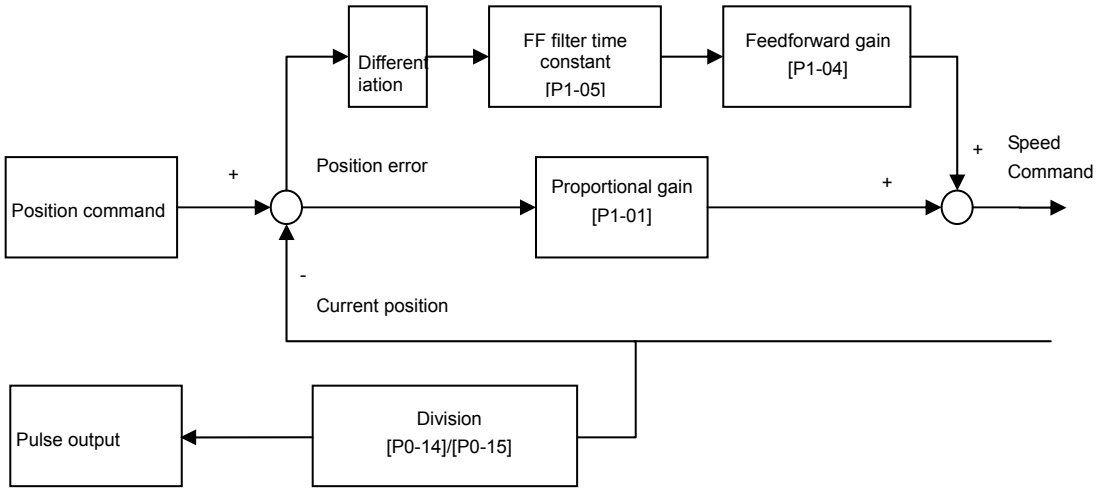


- Position command: Counts the position command pulses entering from outside and converts them into position command values. Next, it applies electronic gear ratio to those values and uses them as internal position commands by way of [P1-03] position command filter. In case the electronic gear ratio has a large numerator, change of external input position command pulse has increasing effects on change of internal position command, so you need to adjust [P1-03] position command filter time constant to reduce the effects.
- Current position: Counts the pulse signals received from the encoder and uses the electronic gear ratio settings to convert them to the current position.
- Position proportional gain [P1-01] and [P1-02]: Converts the difference between the position command and the current position into a speed command by multiplying it by the position proportional gain.

  * Recommended value = Speed proportional gain [P1-06] / 10
- Feedforward gain [P1-04]: Uses the differences in value to the position command to calculate the gradient. Adds the speed command to the gradient to reduce the time needed to reach the target position. If the value which results is too large, then the position controller may overshoot or become unstable. It is important to gradually increase the value from a small value while monitoring the test drive.
- Feedforward filter [P1-05]: The feed-forward control filter vibrates if the position command changes too drastically. If this occurs, configure the filter value until the vibrations disappear.

## (3) The Speed Control Gain

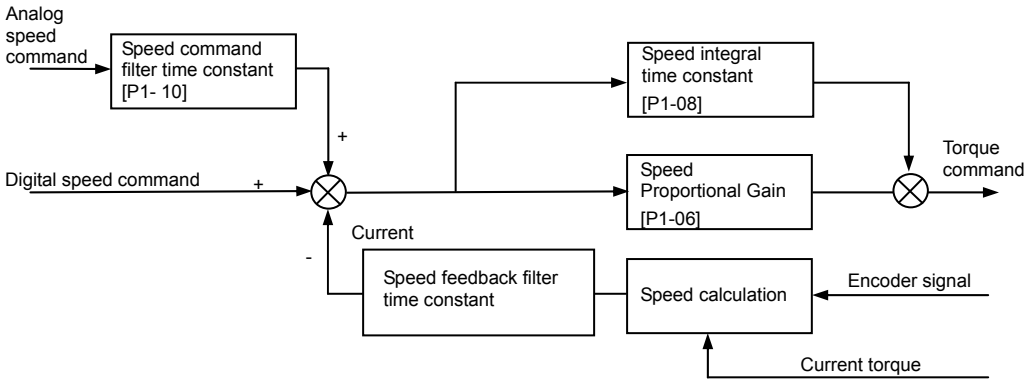


- Speed command: Use an analog speed signal entering from outside as a speed command after running it through the speed command filter [P1-10], or use a digital speed command and [RPM] set in the internal parameter.
- Current speed: Calculates the speed by counting the number of encoder signals as time progresses. Filters the speed to calculate the current speed. The algorithm uses the current torque and inertia to project the speed and compensate for errors which occur when calculating the speed at very low speeds. Therefore, an accurate motor constant and inertia ratio are closely related to the stability of the motor speed control.
- Speed integral time constant [P1-08]: Calculates the integral value of the speed error. The speed error is the difference between the command speed and the current speed. The speed integral time constant converts the speed error into a torque command by multiplying it by the integral time constant.

  A decreased integral time constant solves transient response issues and improves speed tracking. If the integral time constant is too small, however, an overshoot occurs. On the other hand, if the integral time constant is too large, an excessive response drop occurs and proportional control takes over.

  *** Recommended value = 10000 / speed proportional gain [P1-06]**

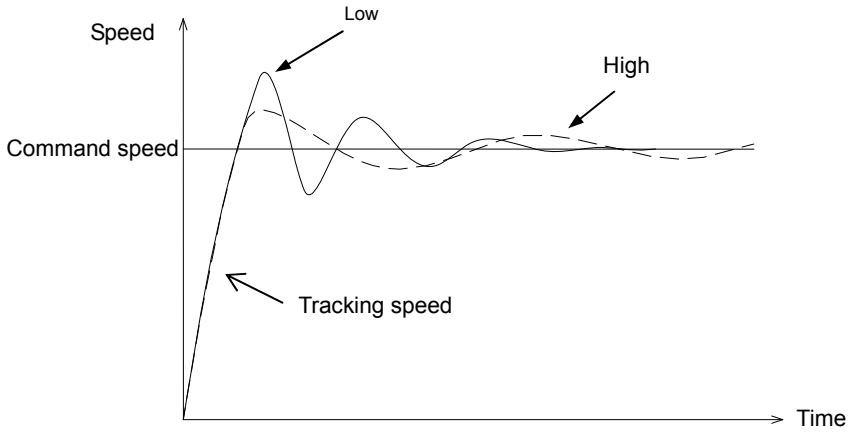


- Speed proportional gain [P1-06]: Converts the speed error into a torque command by multiplying it by the proportional gain.

  If the resulting value is large, then the speed response accelerates and speed tracking increases. However, vibrations occur if the value is too large. If the value is too small, then speed response slows down and speed tracking decreases. This may cause the servo to lose power.

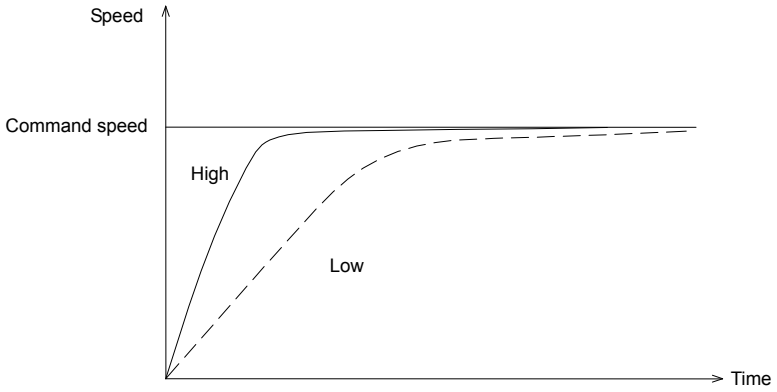


- Speed feedback filter time constant [P1-11]: Filters the speed feedback to control vibrations when the speed of the motor changes due to drive system vibrations or vibrations due to gain and too much load inertia. If the value is too high, it reduces speed responsiveness and control power may be compromised.

  *** Recommended value = 0 - Speed integral time constant [P1-08]/10**

## (4) Torque Command Filter Time Constant Setting [P1-12]

Use a digital filter for the analog torque command voltage to improve the stability of command signals. If the filter value is set too high, responsiveness to torque commands will be reduced. It is important to set a value that is appropriate for your system.

## (5) Torque Limit Setting [P1-13], [P1-14]

You can set maximum torque limits for forward rotation [P1-13] and for reverse rotation [P1-14] separately. The setting is displayed as a percentage of the rated torque and the standard is 300 %.

## (6) Gain 1<->Gain 2 Switching Mode Setting [P1-15] 0x0F (DIGIT 1)

Set speed gain switching mode. [0x0F (DIGIT 1)]

- 0: Only uses gain 1.
- 1: ZSPD auto gain switching

  In case of zero speed, switch from gain 1 to gain 2.

  In the opposite case, switch from gain 2 to gain 1.
- 2: INPOS auto gain switching

  In case of IN position, switch from gain 1 to gain 2.

  In the opposite case, switch from gain 2 to gain 1.
- 3: Manual gain switching

  When the gain 2 contact is on, switch from gain 1 to gain 2.

  In the opposite case, switch from gain 2 to gain 1.

## (7) Gain 1<->Gain 2 Switching Time Setting [P1-16]

- Configure the gain switching time during operation.
- When switching from gain 1 to gain 2 or gain 2 to gain 1, the switching occurs according to the set time.

## (8) P / PI Switching Mode Setting [P1-15 DIGIT 2]

Set P and PI control switching modes. [0xF0 (DIGIT 2)]

- 0: Only control PI.
- 1: Control P if the command torque is higher than the set torque [P1-24].
- 2: Control P if the command speed is higher than the set speed [P1-25].
- 3: Control P if the current acceleration is higher than the set torque [P1-26].
- 4: Control P if the current position error is higher than the set position error [P1-27].
- Control P if the PCON contact is on (highest priority).

These functions allow you to improve position operations by applying the P control operation stop function after PI control operation.

## (9) Resonance Avoidance Operation Setting [P1-17], [P1-18], [P1-19]

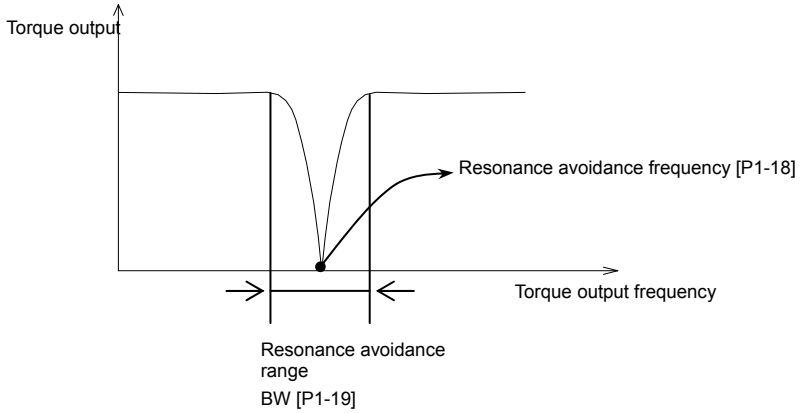


Mechanical resonance causes vibrations to occur at certain frequencies in certain systems. You can control the vibrations by controlling the torque output for specific frequencies.

- Resonance avoidance operation [P1-17]
  - 0: Do not use
  - 1: Interpolation

# 4.4.3 Analog Input/Output Parameter Setting

## (1) Analog Speed Scale Setting

- Analog speed scale [P2-17]: Set the analog speed command of 10 [V] in the unit of [RPM]. The maximum value is the maximum motor speed.
- Analog speed command offset [P2-18]: There are cases where a certain level of voltage remains on the analog signal access circuit, even at the 0 speed command. In this case, you can compensate it by setting the voltage as offset. The unit is ㎷.
- Zero speed command clamp setting

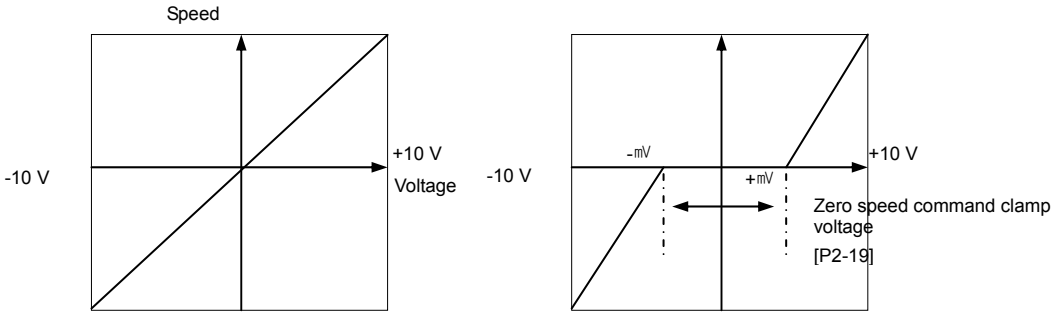


Zero speed command clamp voltage
[P2-19] = 0

Zero speed command clamp voltage
[P2-19] = Not 0 mV

## (2) Analog Torque Scale Setting

- Analog torque command scale [P2-20]: Set the analog torque command of 10 [V] as a percentage of the rated torque. The setting should be within the torque limit [P1-13] and [P-14] of system parameter setting.
- Torque command offset [P2-21]: There are cases in which a certain level of voltage remains on the analog circuit, even at the 0 torque command, because of problems with the circuit. You can compensate this by setting the voltage as offset. The unit is ㎷.
- Zero torque command clamp

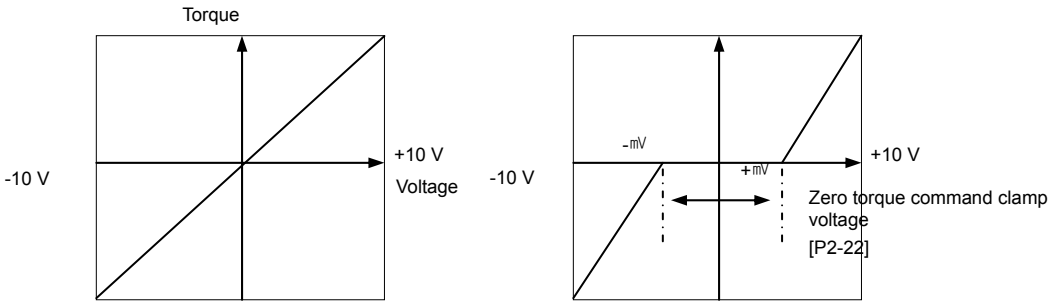


Zero torque command clamp voltage
[P2-22] = 0

Zero torque command clamp voltage
[P2-22] = Not 0 mV

# 4.4.4 Setting the Input/Output Contact Point Parameters

## (1) Position Operation Parameter Setting

- Position reached output range [P2-11]: If the error pulse, which is the difference between the command position pulse and the follow position pulse, reaches this range, a signal is output to indicate that the position has been decided.

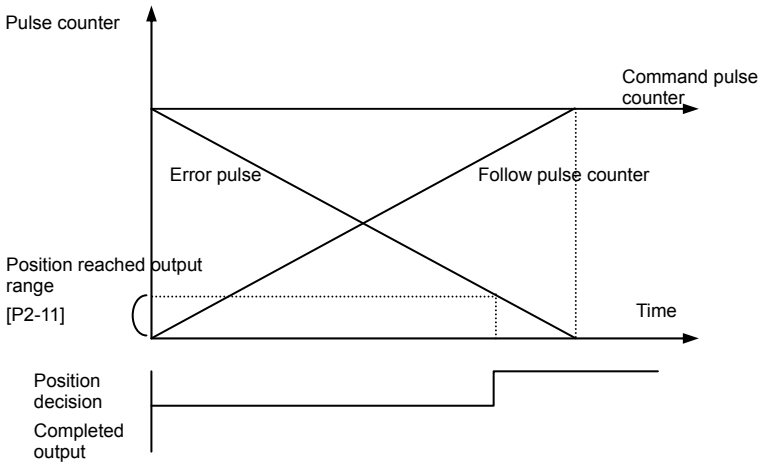


If you set too great a value, the target position complete output signal might occur during operation depending on the position command pulse. Therefore, It is important to set an appropriate value.

- Position operation follow error range [P4-11]

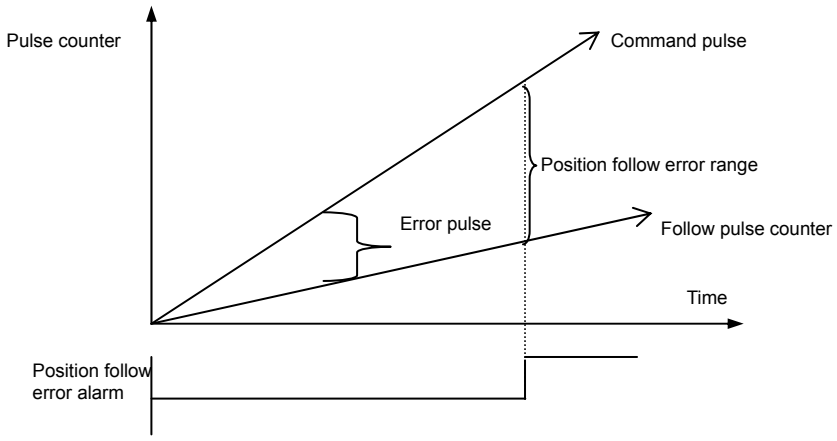


If the error pulse is greater than the position operation tracking error range, the position tracking error alarm [AL-51] triggers.

## (2) Speed Operation Parameter Setting

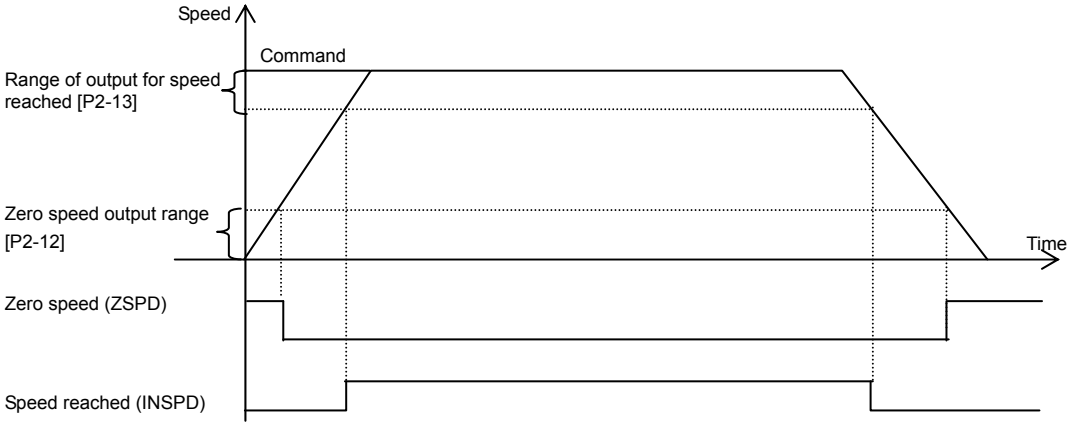


- Zero speed output range [P2-12]: A zero speed signal is output if the current speed drops below the set speed.
- Speed-reached output range [P2-13]: The speed-reached signal is output.

## (3) Brake Signal Output Parameter Setting

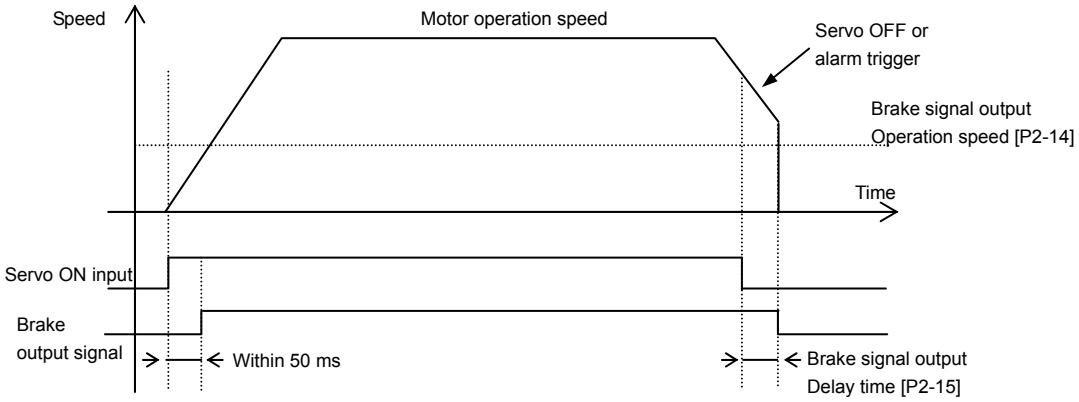


- Brake signal output operation speed [P2-14], brake signal output delay time [P2-15]

  In the event that an alarm triggers when the servo's built-in brake is applied to the vertical axis for the operation of the motor by the servo, this feature is activated to prevent the vertical axis from falling to the motor brake. This may occur as a result of the brake signal's turning off, which is triggered by first of either the brake signal output operation speed [P2-14] or the brake signal output delay time [P2-15].

## (4) Position Pulse Clear Mode [P2-16]

Set the operation of position pulse clear mode in position operation mode.

| Setting | Operation |
|---|---|
| 0 | Operate only on the edge where the contact point turns on. (Do not operate when it is off or on.) 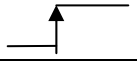 |
| 1 | Operate immediately at contact point on_ Level. |

### (5) Output Signal Logic Definition Setting [P2-10]

You can change the output condition of the current output contact point to initial status ON or initial status OFF.

## 4.4.5 Setting Speed Operation Parameters

### (1) Speed Command [P3-00]-[P3-06]

You can adjust operation speed in [RPM]. Operation speed is determined by speed command input contact points.

| SPD1 | SPD2 | SPD3 | Speed Control |
|---|---|---|---|
| OFF | OFF | OFF | Analog speed command |
| ON | OFF | OFF | Digital speed command 1 |
| OFF | ON | OFF | Digital speed command 2 |
| ON | ON | OFF | Digital speed command 3 |
| OFF | OFF | ON | Digital speed command 4 |
| ON | OFF | ON | Digital speed command 5 |
| OFF | ON | ON | Digital speed command 6 |
| ON | ON | ON | Digital speed command 7 |

### (2) Acceleration/Deceleration Time

- Acceleration time [P3-08]: Specifies the time required, in ms, for the motor to reach the rated motor speed from zero speed.
- Deceleration time [P3-09]: Specifies the time, in ms, required for the motor to stop after running at the rated motor speed.

### (3) S-Curve Operation [P3-11]

You can configure the acceleration/deceleration operation in an S-curve pattern for smooth acceleration/deceleration.

- 0: Trapezoidal -> Set acceleration/deceleration time [P3-08] and [P3-09].
- 1: Sinusoidal -> Set acceleration/deceleration time [P3-08] and [P3-09] + S-curve time [P3-10].

### (4) Manual JOG Operation [Cn-00]

Press RIGHT for forward rotation at JOG operation speed [P3-12]. Press LEFT for reverse rotation at JOG operation speed [P3-12]. This ignores the CN1 contact point input status.

### (5) Program JOG Operation [Cn-01]

A test drive repeats step 1 to 4.
Set operation speed [P3-13]-[P3-16]) and operation time ([P3-17]-[P3-20]) for each step.

# 4.4.6 Position Operation Parameter Setting

## (1) Input Pulse Logic [P4-00]

Set type of the position command input pulse and rotation method per logic.

- 0: A+B
- 1: CW+CCW, positive logic
- 2: Pulse + sign, positive logic
- 3: A+B
- 4: CW + CCW, negative logic
- 5: Pulse + sign, negative logic

| PF + PR | | Forward Rotation | Reverse Rotation |
|---|---|---|---|
| Phase A +Phase B Positive Logic | 0 | 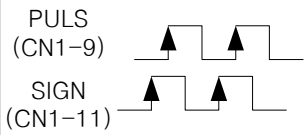 | 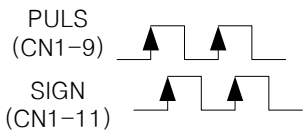 |
| CW +CCW Positive Logic | 1 | 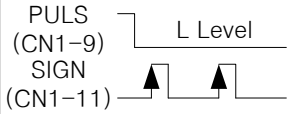 | 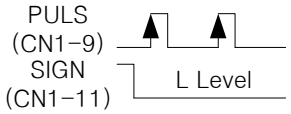 |
| Pulse +Direction Positive Logic | 2 | 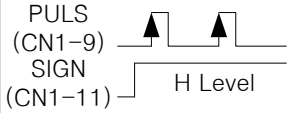 | 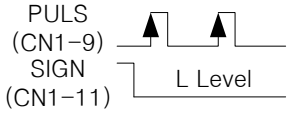 |

| PF + PR | | Forward Rotation | Reverse Rotation |
|---|---|---|---|
| Phase A +Phase B Negative Logic | 3 | 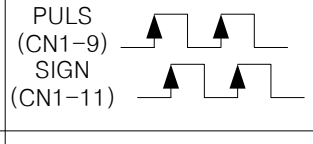 | 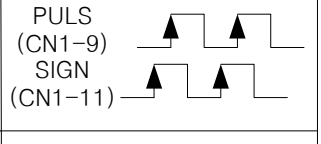 |
| CW +CCW Negative Logic | 4 | 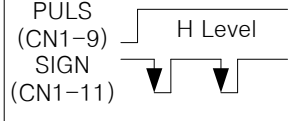 | 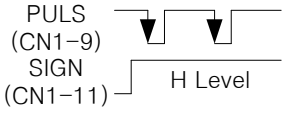 |
| Pulse +Direction Negative Logic | 5 | 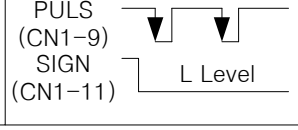 | 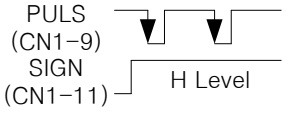 |

## (2) Electronic Gear Ratio [P4-01]-[P4-08]

The electronic gear ratio is the numerator/denominator form of the relation between the position command input pulse and the motor encoder pulse. It is important to set the ratio so that there is no error during position operation. The following describes how to set it:

*** Electronic gear ratio = transmission per input pulse x number of pulses per motor rotation / transmission per motor rotation**

e.g.) If deceleration ratio is 1/2, ball screw lead is 10 ㎜, and encoder pulse is 3000 in the unit of commands that control each pulse in 1 ㎛.

1. Transmission per input pulse = 1 × 10 - 3 = 0.001 ㎜
2. Number of pulses per motor rotation = number of encoder pulses × 4 = 3000 × 4 = 12000
3. Transmission per motor rotation = 10 × 1/2 = 5 ㎜
4. Electronic gear ratio = 12000×0.001/5 = 12/5

Therefore, the numerator and denominator of electronic gear ratio are 12 and 5 respectively.

**Note 1)** There are 12,000 pulses per rotation for a 3,000-pulse encoder because the servo drive controls pulses by multiplying them by four in quadrature type encoder signals.

**Note 2)** Here, motor speed can be calculated in the following equation:
Motor speed = 60 × electronic gear ratio × input pulse frequency / number of pulses per motor rotation

**Note 3)** Also, you can calculate error pulse [St-05], that is, the difference between command pulse and following pulse during operation, in the following equation:
Error pulse = command pulse frequency × electronic gear ratio × {1 - (0.01 × [P1-05])} / [P1-01]

**Note 4)** Series type encoder signal system applies 524288 pulses per revolution without a multiple of 4.

## (3) Backlash Compensation [P4-13]

If the position operation causes backlashes which change the position, then this setting converts backlash amount into a number of pulses to compensate for the backlash.

## (4) Electronic Gear Ratio Offset Adjustment [P4-09]

If the operation distance per rotation changes due to wear and tear on the machine during position pulse command operation, you can adjust the change caused by wear and tear with offset.

- Electronic gear ratio setting mode [P4-09]
  - 0: Use electronic gear ratio 0-3.
  - 1: Use electronic gear ratio 0. Override the value on the electronic gear ratio numerator.
- Electronic gear ratio numerator offset setting

  In the above example, if you enter 12,000 for the numerator and 5,000 for the denominator and turn on the EGEAR1 contact point, the numerator increases by one. If you turn on the EGEAR2 contact, the numerator decreases by one. The change is saved in the [P4-10] parameter.

  If the offset is two, the electronic gear ratio for operation changes from 12000/5000 to 12002/5000. Also, if the offset is -2, the electronic gear ratio for operation changes from 12000/5000 to 11998/5000.

# 4.5 Alarms and Warnings

## 4.5.1 Servo Alarm Status Summary Display List

If an alarm triggers, the malfunction signal output contact point (ALARM) turns off and the dynamic brake stops the motor.

| Alarm code | Name | Details | What to check |
|---|---|---|---|
| AL-10 | IPM Fault | Overcurrent (H/W) | Check for incorrect wiring in the drive output and encoder.<br>Check the motor ID, drive ID, and encoder settings.<br>Determine whether there is a conflict or binding in the equipment. |
| AL-11 | IPM temperature | IPM overheat | Check for incorrect wiring in the drive output and encoder.<br>Check the motor ID, drive ID, and encoder settings.<br>Determine whether there is a conflict or binding in the equipment. |
| AL-14 | Over current | Overcurrent (S/W) | Check for incorrect wiring in the drive output and encoder.<br>Check the motor ID, drive ID, and encoder settings.<br>Determine whether there is a conflict or binding in the equipment. |
| AL-15 | Current offset | Abnormal current offset | Replace the drive if [St-23] and [St-24] are 10% or higher of the rated current. |
| AL-16 | Overcurrent (/CL) | Overcurrent (H/W) | Check for incorrect wiring in the drive output and encoder.<br>Check the motor ID, drive ID, and encoder settings.<br>Determine whether there is a conflict or binding in the equipment. |
| AL-21 | Continuous overload | Continuous overload | Determine whether there is a conflict or binding in the equipment.<br>Check the load and the condition of the brake.<br>Check for incorrect wiring in the drive output and encoder.<br>Check the motor ID, drive ID, and encoder settings. |
| AL-22 | Room temperature | Drive overheat | Check the temperature inside the drive [St-19].<br>the cooling fan installation, and the load condition. |
| AL-23 | Regen. Overload | Regenerative overload | Check the input voltage, regenerative braking resistance, and wiring.<br>Replace the drive. |
| AL-24 | Motor cable open | Motor disconnection | Check the wiring of the motor. |
| AL-30 | Encoder comm. | Serial encoder communication error | Check for incorrect wiring of the serial encoder. |
| AL-31 | Encoder cable open | Encoder cable disconnection | Check whether the encoder cable is disconnected. |

| Alarm code | Name | Details | What to check |
|---|---|---|---|
| AL-32 | Encoder data error | Encoder data error | Check the [P0-02] setting and encoder wiring. |
| AL-33 | Motor setting error | Motor ID setting error | Check the [P0-00] setting. |
| AL-34 | Encoder Z PHASE Open | Encoder Z phase disconnected | Check whether the encoder cable is disconnected. |
| AL-35 | Low Battery Error | Low voltage error | BackUp battery has not enough voltage, Change battery.<br>※After replacing battery, Power “ON” and Homing operation are absolutely needed<br>(apply from S/W Ver 1.28) |
| AL-40 | Under voltage | Low voltage | Check input voltage and power unit wiring. |
| AL-41 | Overvoltage | Overvoltage | Check the input voltage and wiring. Check the braking resistance for damage.<br>Check for excessive regenerative operation. Check the regenerative resistance. |
| AL-42 | RST power fail | Main power failure | Check the power unit wiring and power supply. |
| AL-43 | Control power fail | Control power failure | Check the power unit wiring and power supply. |
| AL-50 | Over speed limit | Overspeed | Check the encoder, encoder settings, encoder wiring, gain settings, motor wiring, motor ID, electric gear ratio, and speed command scale. |
| AL-51 | Position following | Excessive positional error | Check the excessive position command pulse setting [P4-11], wiring, limit contact point, gain setting, encoder setting, and electric gear ratio.<br>Check the load on the equipment and whether there is binding on the equipment. |
| AL-53 | Over pulse CMD | Pulse command frequency error | Check the pulse command frequency on the upper level controller, and check the command pulse type. |
| AL-54 | Speed deviation | Excessive speed error | Check for incorrect wiring in the drive output and encoder. Also, check the connection and load status of the equipment. |
| AL-55 | Motor overrun | Motor overrun | Check for incorrect wiring in the drive output and encoder. Also, check the connection and load status of the equipment. |
| AL-63 | Parameter checksum | Parameter error | Factory reset [Cn-21]. |
| AL-64 | Parameter range | Parameter range error | Factory reset [Cn-21]. |
| AL-71 | Invalid factory setting | Factory setting error | Factory reset [Cn-21]. |
| AL-72 | GPIO setting | Output contact point setting error | Factory reset [Cn-21]. |

## 4.5.2 Servo Warning Status Summary Display List

If a warning code is displayed as the current operation status [St-00], the servo drive is operating abnormally. Check what needs to be inspected for the issue.

| Warning State (CODE) | Name | Details and causes | What to check |
|---|---|---|---|
| W-01 | RST_PFAIL | Main power phase loss | If the [P0-06] DIGIT 2 is set to 1, the main power fails. |
| W-02 | LOW_BATT | Battery low | BackUp battery has not enough voltage |
| W-04 | OV_TCMD | Excessive Torque Command | You have entered a command that exceeds the maximum set torque. |
| W-08 | OV_VCMD | Excessive speed command | You have entered a command that exceeds the maximum set speed. |
| W-10 | OV_LOAD | Overload warning | The maximum overload [P0-13] has been reached. |
| W-20 | SETUP | Capacity settings | The electric current capacity of the motor is larger than that of the drive. |
| W-40 | UD_VTG | Low voltage warning | When [P0-06] DIGIT 2 is set to 1, the DC link voltage is 190 V or below. |
| W-80 | EMG | EMG contact | Check I/O wiring and [P2-09] value |

Warning code is displayed in hexadecimal, but it is displayed as the sum of respective warning codes when two or more warnings occur at once. For example, warning code is displayed as [W-0C] when both [W-04] Excessive Torque Command and [W-08] Excessive Speed Command occur at once.

If [W-80] occurs, SVON turns from ON to OFF. And when you turn on I/O power or change contact logic, [W-80] code is automatically deactivated.

# 4.6 Motor Types and IDs

| Model Name | ID | Watt | Notes |
|---|---|---|---|
| SEP09A | 461 | 900 | |
| SEP15A | 462 | 1500 | |
| SEP22A | 463 | 2200 | |
| SEP30A | 464 | 3000 | |
| SEP06D | 465 | 600 | |
| SEP11D | 466 | 1100 | |
| SEP16D | 467 | 1600 | |
| SEP22D | 468 | 2200 | |
| SEP03M | 469 | 300 | |
| | | | |
| SEP06M | 470 | 600 | |
| SEP09M | 471 | 900 | |
| SEP12M | 472 | 1200 | |
| SEP05G | 473 | 450 | |
| SEP09G | 474 | 850 | |
| SEP13G | 475 | 1300 | |
| SEP17G | 476 | 1700 | |
| | | | |
| SFP30A | 481 | 3000 | |
| SFP50A | 482 | 5000 | |
| SFP22D | 485 | 2200 | |
| SFP35D | 486 | 3500 | |
| SFP55D | 487 | 5500 | |
| SFP75D | 488 | 7500 | |
| SFP12M | 489 | 1200 | |
| | | | |
| SFP20M | 490 | 2000 | |
| SFP30M | 491 | 3000 | |
| SFP44M | 492 | 4400 | |
| SFP20G | 493 | 1800 | |
| SFP30G | 494 | 2900 | |
| SFP44G | 495 | 4400 | |
| SFP60G | 496 | 6000 | |
| SFP75G | 497 | 7500 | |
| | | | |
| SGP22D | 511 | 2200 | |

| Model Name | ID | Watt | Notes |
|---|---|---|---|
| SGP35D | 512 | 3500 | |
| SGP55D | 513 | 5500 | |
| SGP75D | 514 | 7500 | |
| SGP110D | 515 | 11000 | |
| | | | |
| SGP12M | 521 | 1200 | |
| SGP20M | 522 | 2000 | |
| SGP30M | 523 | 3000 | |
| SGP44M | 524 | 4400 | |
| SGP60M | 525 | 6000 | |
| | | | |
| SGP20G | 531 | 1800 | |
| SGP30G | 532 | 2900 | |
| SGP44G | 533 | 4400 | |
| SGP60G | 534 | 6000 | |
| SGP85G | 535 | 8500 | |
| SGP150G | 537 | 15000 | |
| | | | |
| | | | |
| | | | |
| | | | |
| | | | |
| | | | |
| | | | |
| | | | |
| | | | |
| | | | |
| | | | |
| | | | |
| | | | |
| | | | |
| | | | |
| | | | |
| | | | |
| | | | |
| | | | |
| | | | |
| | | | |
| | | | |
| | | | |
| | | | |
| | | | |

| Model Name | ID | Watt | Notes |
|---|---|---|---|
| FEP09A | 261 | 900 | |
| FEP15A | 262 | 1500 | |
| FEP22A | 263 | 2200 | |
| FEP30A | 264 | 3000 | |
| | | | |
| FEP06D | 265 | 600 | |
| FEP11D | 266 | 1100 | |
| FEP16D | 267 | 1600 | |
| FEP22D | 268 | 2200 | |
| | | | |
| FEP03M | 269 | 300 | |
| FEP06M | 270 | 600 | |
| FEP09M | 271 | 900 | |
| FEP12M | 272 | 1200 | |
| | | | |
| FEP05G | 273 | 450 | |
| FEP09G | 274 | 850 | |
| FEP13G | 275 | 1300 | |
| FEP17G | 276 | 1700 | |
| | | | |
| FFP30A | 281 | 3000 | |
| FFP50A | 282 | 5000 | |
| | | | |
| FFP22D | 285 | 2200 | |
| FFP35D | 286 | 3500 | |
| FFP55D | 287 | 5500 | |
| FFP75D | 288 | 7500 | |
| | | | |
| FFP12M | 289 | 1200 | |
| FFP20M | 290 | 2000 | |
| FFP30M | 291 | 3000 | |
| FFP44M | 292 | 4400 | |
| | | | |
| FFP20G | 293 | 1800 | |
| FFP30G | 294 | 2900 | |
| FFP44G | 295 | 4400 | |

| Model Name | ID | Watt | Notes |
|---|---|---|---|
| FFP60G | 296 | 6000 | |
| FFP75G | 297 | 7500 | |
| | | | |
| FGP22D | 311 | 2200 | |
| FGP35D | 312 | 3500 | |
| FGP55D | 313 | 5500 | |
| FGP75D | 314 | 7500 | |
| | | | |
| FGP12M | 321 | 1200 | |
| FGP20M | 322 | 2000 | |
| FGP30M | 323 | 3000 | |
| FGP44M | 324 | 4400 | |
| | | | |
| FGP20G | 331 | 1800 | |
| FGP30G | 332 | 2900 | |
| FGP44G | 333 | 4400 | |
| FGP60G | 334 | 6000 | |

# 5. Handling and Operation

## 5.1 Operation Checklist

Thoroughly check the following items during the test drive to prevent injuries or damage to the servo motor.

### 5.1.1 Wiring Checklist

1. Is the voltage (AC 200 V) appropriate for the power input terminals?
2. Are the power cables (U, V, W, and FG) between the drive and the motor connected correctly?
3. Is the voltage (24 V) connected to the control signal correctly?
4. Is the regenerative resistance appropriate for the capacity and correctly connected?
5. Are the wiring cables free from bends or kinks?
6. Is the ground and wire insulation free from defects?

### 5.1.2 the Drive Signal (CN1) Wiring Checklist

Confirm that the wire and contacts for the drive signals are in the state listed on the following table.

| Pin Number | Pin Name | State of Contact | Pin Number | Pin Name | State of Contact |
|---|---|---|---|---|---|
| 18 | EMG | ON | 19 | CWLIM | ON |
| 47 | SVON | OFF | 20 | CCWLIM | ON |
| 48 | STOP | OFF | 17 | ALMRST | OFF |

The above is factory-initialized status. Different functions may be allocated according to input signal allocations ([P2-00], [P2-01], [P2-02], [P2-03], and [P2-04]).

### 5.1.3 Surrounding Environment Checklist

Are there any metal filings or water around the wires?

### 5.1.4 Machine Status Checklist

1. Is the servo motor coupling in good condition?
2. Are the locking bolts fastened tightly?
3. Are there any obstacles that may prohibit operation of the machine?

## 5.1.5 System Parameter Checklist

1. Is the motor ID setting [P0-00] in good condition?
2. Are the encoder type [P0-01] and the encoder pulse [P0-02] in good condition?
3. Is control gain set to an appropriate value?

*Note: Refer to "Appendix 2 Test Drive Procedure."

# 5.2 Handling

## 5.2.1 Manual JOG Operation [Cn-00]

The drive performs manual JOG operation by itself.

1. Press SET in [Cn-00] and [JoG] is displayed.
2. Press SET and [SV-on] is displayed and the servo turns on for operation.

   If an alarm triggers, check wiring and other possible causes before restarting.
3. Press and hold UP and the motor turns forward (CCW) at the JOG operation speed [P3-12].
4. Press and hold DOWN and the motor turns counterclockwise at the JOG operation speed [P3-12].
5. Press SET again and the manual JOG operation finishes and the servo turns off.
6. Press down [MODE] to return to the parameter screen [Cn-00].

| Related Parameters | Speed | Initial |
|---|---|---|
| [P3-08] | Speed command acceleration time ms | 0 |
| [P3-09] | Speed command deceleration time ms | 0 |
| [P3-10] | Speed command S-curve time ms | 10 |
| *[P3-11] | Speed operation pattern | 0 |
| [P3-12] | JOG operation speed [RPM] | 500 |

The parameter marked with "*" cannot be modified when the servo is on.

**[Example of handling manual JOG operation]**

| Order | Loader Displays | Keys to Use | What to Do |
|---|---|---|---|
| 1 |  | 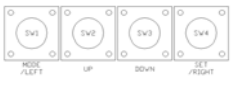 | Displays the speed control mode with main power and control power permitted. |
| 2 | 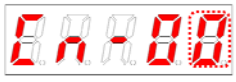 |  | Press MODE to move to [Cn-00]. |
| 3 |  |  | Press SET to enter manual JOG operation. |
| 4 |  |  | Press SET to turn on the servo. |
| 5 |  | 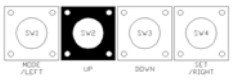 | Press and hold UP when the servo is on and the motor turns forward (CCW). Lift your hand off the key and the motor stops. |
| 6 |  | 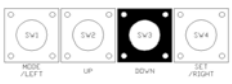 | Press and hold DOWN when the servo is on and the motor turns counterclockwise. Lift your hand off the key and the motor stops. |

| Order | Loader Displays | Keys to Use | What to Do |
|---|---|---|---|
| 7 |  |  | Press DOWN and the servo changes to OFF. |
| 8 | 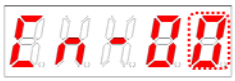 |  | Press MODE for a second and you return to the menu screen [Cn-00]. |

※ " " indicates flickering.

## 5.2.2 Program JOG Operation [Cn-01]

Continuously operates according to the program already set.

1. Press the SET key in [Cn-01] parameter. Then, [P-JoG] is displayed.
2. Press SET and [run] is displayed. The program JOG operation starts after the servo is turned on.

   (If an alarm triggers at this moment, check the wiring of the servo and other possible causes before restarting.)
3. Press SET again and the program JOG operation finishes and the servo is turned off.
4. Press down [MODE] to return to the parameter screen [Cn-00].
5. Four operation steps repeat continuously from 0 to 3. Operation speed and time can be set in the following parameters:

| Related Parameters | Speed | Initial |
|---|---|---|
| [P3-08] | Speed command acceleration time [ms] | 100 |
| [P3-09] | Speed command deceleration time [ms] | 100 |
| [P3-10] | Speed command S-curve time [ms] | 10 |
| [P3-11] | Speed operation pattern | 0 |

| Step | Program Operation Speed | Program Operation Time |
|---|---|---|
| 0 | [P3-13] | [P3-17] |
| 1 | [P3-14] | [P3-18] |
| 2 | [P3-15] | [P3-19] |
| 3 | [P3-16] | [P3-20] |

**[Example of handling program JOG operation]**

| Order | Loader Displays | Keys to Use | What to Do |
|---|---|---|---|
| 1 |  | 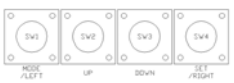 | Displays the speed control mode with main power and control power permitted. |
| 2 |  |  | Press MODE to move to [Cn-00]. |

| Order | Loader Displays | Keys to Use | What to Do |
|---|---|---|---|
| 3 |  |  | Press UP or DOWN to move to [Cn-01]. |
| 4 |  |  | Press SET to enter program Jog operation. |
| 5 |  |  | Press SET and the motor starts operating according to the predefined program. |
| 6 |  |  | Press the SET key again and the operation ends. [done] is displayed. |
| 7 |  | 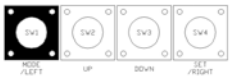 | Hold down MODE for approximately one second to return to [Cn-01]. |

※ " " indicates flickering.

## 5.2.3 Alarm Reset [Cn-02]

Reset the alarm that went off.

1. Contact alarm reset: If you turn on ALMRST among input contacts, the alarm is reset and becomes normal.
2. Operation alarm reset: If you press SET in the alarm reset [Cn-02] parameter among operation handling parameters, [ALrst] is displayed. If you press SET again, the alarm is reset and becomes normal.

   ※ If the alarm keeps ringing after the reset, check and remove possible causes and then repeat the process.

**[Example of alarm reset]**

| Order | Loader Displays | Keys to Use | What to Do |
|---|---|---|---|
| 1 |  | 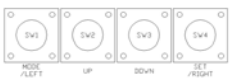 | Displays the speed control mode with main power and control power permitted. |
| 2 |  |  | Press MODE to move to [Cn-00]. |
| 3 |  |  | Press UP or [DOWN] to move to [Cn-02]. |
| 4 |  | 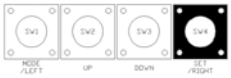 | Press SET to enter alarm reset mode. |
| 5 |  |  | Press SET to reset the alarm. [done] is displayed. |
| 6 |  | 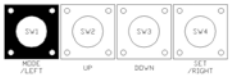 | Press MODE for a second to return to [Cn-02]. |

※ " " indicates flickering.

## 5.2.4 Reading Alarm History [Cn-03]

Check the saved alarm history.

**[Example of getting alarm history]**

| Order | Loader Displays | Keys to Use | What to Do |
|---|---|---|---|
| 1 |  |  | Displays the speed control mode with main power and control power permitted. |
| 2 |  | 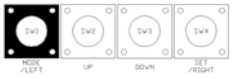 | Press MODE to move to [Cn-00]. |
| 3 | 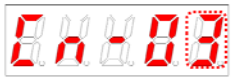 |  | Press UP or DOWN to move to [Cn-03]. |
| 4 |  | 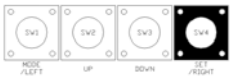 | Press SET to start reading alarm history. |
| 5 |  | 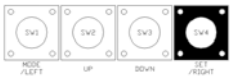 | Press SET and the most recent alarm code is displayed.<br>Example: Recent first history [AL-42]: Main power failure occurred.<br>01: Latest alarm<br>20: 20th previous alarm |
| 6 |  |  | Press UP or DOWN to read alarm history.<br>Example: The second previous history [AL-10]: Overcurrent (HW) occurred.<br>01: Latest alarm<br>20: 20th previous alarm |
| 7 |  | 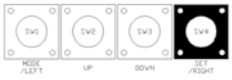 | Press SET to finish reading alarm history.<br>[done] is displayed. |
| 8 | 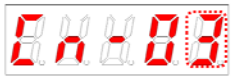 | 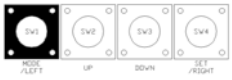 | Press MODE for a second to return to [Cn-03]. |

※ “ ” indicates flickering.

## 5.2.5 Alarm History Reset [Cn-04]

Delete all currently stored alarm history.

**[Example of alarm history reset]**

| Order | Loader Displays | Keys to Use | What to Do |
|---|---|---|---|
| 1 |  |  | Displays the speed control mode with main power and control power permitted. |
| 2 |  |  | Press MODE to move to [Cn-00]. |
| 3 | 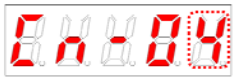 | 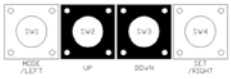 | Press UP or DOWN to move to [Cn-04]. |
| 4 |  | 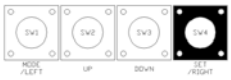 | Press SET to enter alarm history reset. |
| 5 |  |  | Press SET to delete alarm history. [done] is displayed. |
| 6 | 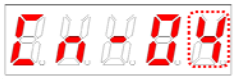 | 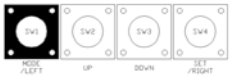 | Press MODE for a second to return to [Cn-04]. |

※ "▯" indicates flickering.

## 5.2.6 Auto Gain Tuning [Cn-05]

Perform automatic tuning operation.

1. Press SET from the [Cn-05] parameter and [Auto] is displayed.
2. Press SET and [run] is displayed and automatic gain tuning starts.

   If an alarm triggers at this moment, check the wiring of the servo and other possible causes before restarting.
3. When gain adjustment is completed, inertia ratio [%] is displayed, and [P1-00], [P1-06] and [P1-08] are automatically changed and saved.

| Related Parameters | name | Initial |
|---|---|---|
| [P1-20] | Auto gain tuning speed [100 RPM] | 8 |
| [P1-21] | Auto gain tuning distance | 3 |

**[Example of handling auto gain tuning]**

| Order | Loader Displays | Keys to Use | What to Do |
|---|---|---|---|
| 1 |  | 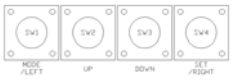 | Displays the speed control mode with main power and control power permitted. |
| 2 | 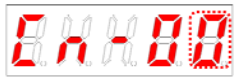 | 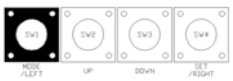 | Press MODE to move to [Cn-00]. |
| 3 |  | 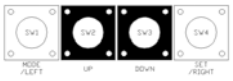 | Press UP or DOWN to move to [Cn-05]. |
| 4 |  | 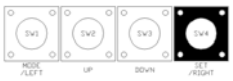 | Press SET to enter automatic gain tuning. |
| 5 |  |  | Press SET to start three cycles of forward rotation and reverse rotation. |
| 6 |  | - | Upon completion of automatic tuning, the tuning result will be displayed on the loader.<br>Press SET for retuning. |
| 7 |  |  | Press MODE for a second to return to [Cn-05]. |

※ "▯" indicates flickering.

## 5.2.7 Phase Z Search Operation [Cn-06]

Perform phase Z search operation.

1. Press SET in [Cn-06] and [Z-rtn] is displayed.
2. Press SET and [run] is displayed and the servo turns on.
3. While you hold down UP, the motor keeps turning forward (CCW) until it finds the phase Z position of the encoder.
4. While you hold down DOWN, the motor keeps turning counterclockwise until it finds the phase Z position of the encoder.
5. Press SET and [done] is played and the phase Z search ends.

※ This function is useful for finding the Z position and assembling it by a specific standard.

| Related Parameters | name | Initial |
|---|---|---|
| [P3-07] | Phase Z search operation speed setting [RPM] | 10 |

**[Example of handling phase Z search operation]**

| Order | Loader Displays | Keys to Use | What to Do |
|---|---|---|---|
| 1 |  | 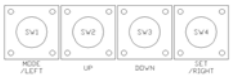 | Displays the speed control mode with main power and control power permitted. |
| 2 |  |  | Press MODE to move to [Cn-00]. |
| 3 |  |  | Press UP or DOWN to move to [Cn-06]. |
| 4 |  |  | Press SET to enter phase Z search operation. |
| 5 |  | 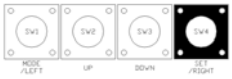 | Press SET to turn on the servo. |
| 6 |  |  | Press UP and the motor turns forward (CCW) until it finds phase Z.<br>Press DOWN and the motor turns reverse (CW) until it finds phase Z. |
| 7 |  |  | Press SET to end the phase Z search operation mode.<br>The servo turns off and [done] is displayed. |
| 8 |  | 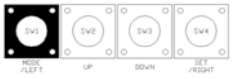 | Press MODE for a second to return to the menu screen [Cn-06]. |

※ "▯" indicates flickering.

# 5.2.8 Input Contact Forced ON/OFF [Cn-07]

The drive forcibly turns on/off the input contact without an upper level controller or I/O jig.

## (1) Input Contact Forced ON/OFF Setting

The positions of the seven segment LEDs and CN1 contacts correspond as follows.

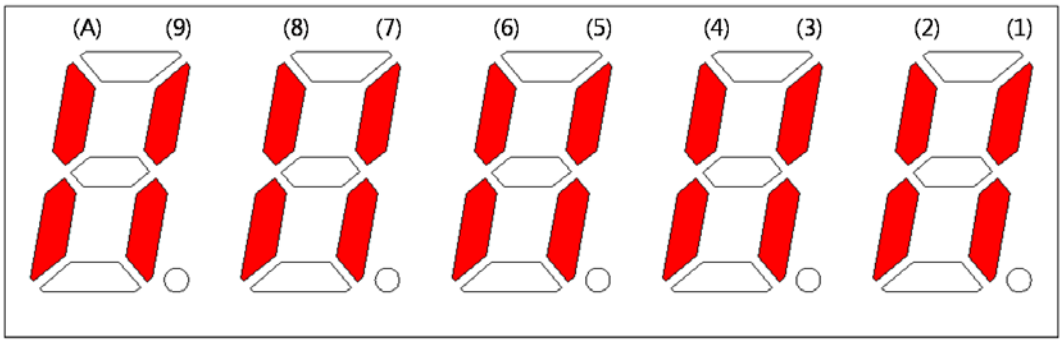


If an LED that corresponds to a contact is turned on/off, it indicates ON/OFF accordingly.

**[Input Contact Setting]**

| Number | (A) | (9) | (8) | (7) | (6) | (5) | (4) | (3) | (2) | (1) |
|---|---|---|---|---|---|---|---|---|---|---|
| CN1 pin number | 48 | 18 | 19 | 20 | 46 | 17 | 21 | 22 | 23 | 47 |
| Allocated default signal name | STOP | EMG | CWLIM | CCWLIM | DIR | ALMRST | SPD3 | SPD2 | SPD1 | SVON |

Press UP on each digit and the (A), (8), (6), (4), and (2) signals turn on or off forcibly.

Press DOWN on each digit and the (9), (7), (5), (3), and (1) signals turn on or off forcibly.

Press MODE to move to another digit.

## (2) Example of Input Contact Forced ON/OFF

(SVON ON → EMG ON → EMG OFF → SVON OFF)

**[Example of handling input contact forced ON/OFF]**

| Order | Loader Displays | Keys to Use | What to Do |
|---|---|---|---|
| 1 |  | 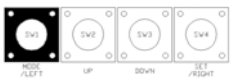 | Press MODE to move to [Cn-00]. |
| 2 | 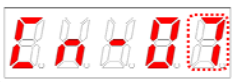 | 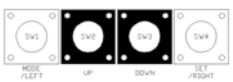 | Press UP or DOWN to move to [Cn-07]. |
| 3 |  | 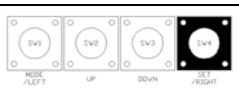 | Press SET to enter input forced ON/OFF mode. |
| 4 | 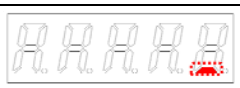 | 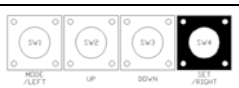 | Press SET to enter forced input bit setting. |

| Order | Loader Displays | Keys to Use | What to Do |
|---|---|---|---|
| 5 |  |  | Press DOWN to turn on the servo forcibly. |
| 6 |  |  | Press MODE at the blinking cursor to move to the desired digit, DIGIT 5. |
| 7 |  | 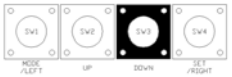 | Press DOWN to turn on EMG forcibly. |
| 8 |  | 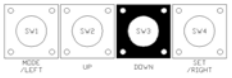 | Press DOWN to turn off EMG forcibly. |
| 9 |  |  | Press MODE at the cursor to move to the desired digit, DIGIT 1. |
| 10 |  | 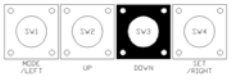 | Press DOWN to turn off the servo forcibly. |
| 11 |  |  | Press SET to end input forced ON/OFF mode.<br>[done] is displayed. |
| 12 |  |  | Press MODE for a second to return to [Cn-07]. |

※ "▯" indicates flickering.

# 5.2.9 Output Contact Forced ON/OFF [Cn-08]

Without an upper level controller or I/O jig, the drive forcibly turns on/off the output contact.

## (1) Output Contact Forced ON/OFF Setting

The positions of the seven segment LEDs and CN1 contacts correspond as follows.

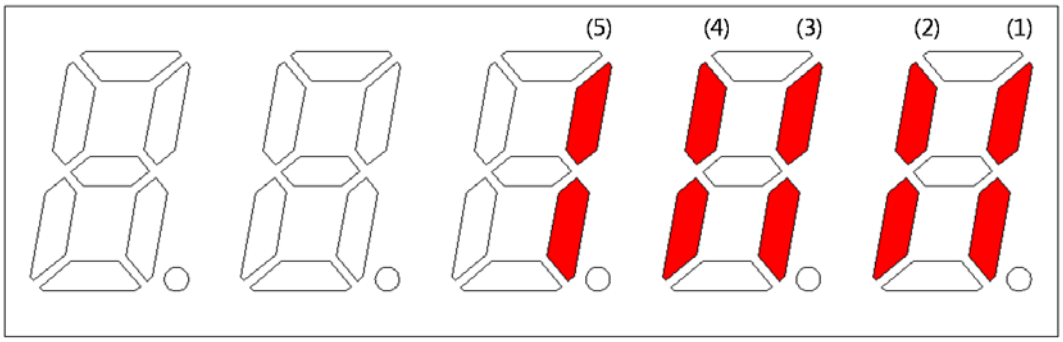


If an LED that corresponds to a contact is turned on/off, it indicates ON/OFF accordingly.

**[Output Contact Setting]**

| Number | (5) | (4) | (3) | (2) | (1) |
|---|---|---|---|---|---|
| CN1 - pin number | 45 | 44 | 43 | 40 /41 | 38 / 39 |
| Allocated default signal name | INPOS | BRAKE | ZSPD | READY | ALARM |

Press UP on each digit and the (4) and (2) signals are turned on or off for forced output.

Press DOWN on each digit and the (5), (3) and (1) signals are turned on or off for forced output.

Press MODE to move to another digit.

## (2) Example of Output Contact Forced ON/OFF

(BRAKE OFF)

**[Example of handling output contact forced ON/OFF]**

| Order | Loader Displays | Keys to Use | What to Do |
|---|---|---|---|
| 1 | 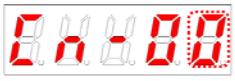 |  | Press MODE to move to [Cn-00]. |
| 2 |  | 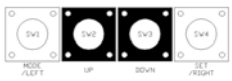 | Press UP or DOWN to move to [Cn-08]. |
| 3 |  | 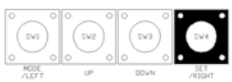 | Press SET to enter input forced ON/OFF setting. |
| 4 |  | 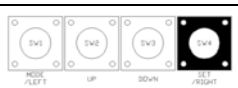 | Press SET to enter forced output bit setting. |

| Order | Loader Displays | Keys to Use | What to Do |
|---|---|---|---|
| 5 |  | 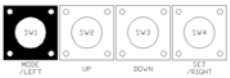 | Press MODE at the blinking cursor to move to the desired digit, DIGIT 2, and it rotates. |
| 6 |  | 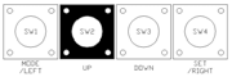 | Press UP to turn off the brake signal. |
| 7 |  | 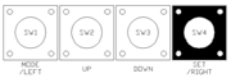 | Press SET to end input forced ON/OFF mode.<br>[done] is displayed. |
| 8 |  |  | Press MODE for a second to return to [Cn-08]. |

※ "▯" indicates flickering.

## 5.2.10 Parameter Reset [Cn-09]

Reset parameter data.

**[Example of initializing parameters]**

| Order | Loader Displays | Keys to Use | What to Do |
|---|---|---|---|
| 1 |  |  | Displays the speed control mode with main power and control power permitted. |
| |  |  | Press MODE to move to [Cn-00]. |
| 2 | 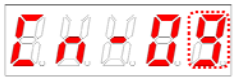 |  | Press UP or DOWN to move to [Cn-09]. |
| 3 |  | 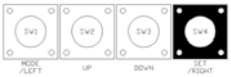 | Press SET to enter parameter reset. |
| 4 |  | 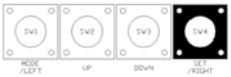 | Press SET to reset data.<br>[done] is displayed. |
| 5 | 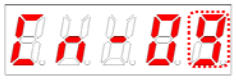 | 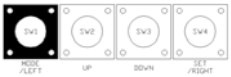 | Press MODE for a second to return to [Cn-09]. |

※ "▯" indicates flickering.

## 5.2.11 Automatic Speed Command Offset Correction [Cn-10]

Correct the offset of analog speed commands automatically.

The range of adjustable speed command analog voltage is from +1 V to -1 V. If offset voltage exceeds this range, oVrnG is displayed and there is no correction.

You can check the corrected offset value in the analog speed offset [P2-18].

**[Example of handling automatic speed command offset calibration]**

| Order | Loader Displays | Keys to Use | What to Do |
|---|---|---|---|
| 1 |  |  | Press MODE to display [Cn-00]. |
| 2 |  |  | Press UP or DOWN to move to [Cn-10]. |
| 3 |  |  | Press SET to enter offset correction. |
| 4 | <br>or<br> |  | Press SET to compensate offset.<br>[done] is displayed.<br>If the value exceeds the allowed range, oVrnG is displayed. |
| 5 | 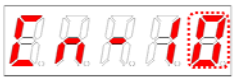 |  | Press MODE for a second to return to [Cn-10]. |

※ "▯" indicates flickering.

# 5.2.12 Automatic Torque Command Offset Correction [Cn-11]

Corrects the offset of analog torque commands automatically.

The range of adjustable torque command analog voltage is from +1 V to -1 V. If offset voltage exceeds this range, oVrnG is displayed and there is no correction.

You can check the corrected offset value in the analog torque offset [P2-21].

**[Example of handling automatic torque command offset correction]**

| Order | Loader Displays | Keys to Use | What to Do |
|---|---|---|---|
| 1 |  |  | Press MODE to display [Cn-00]. |
| 2 | 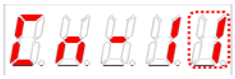 |  | Press UP or DOWN to move to [Cn-11]. |
| 3 |  |  | Press SET to enter offset correction. |
| 4 | <br>or<br> |  | Press SET to compensate offset.<br>[done] is displayed.<br>If the value exceeds the allowed range, oVrnG is displayed. |
| 5 | 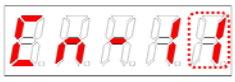 |  | Press MODE for a second to return to [Cn-11]. |

※ "▯" indicates flickering.

## 5.2.13 Manual Speed Command Offset Correction [Cn-12]

Calibrates the offset value of analog speed commands manually. Example: -10

The range of adjustable speed command analog voltage is from +1 V to -1 V. If offset voltage exceeds this range, [oVrnG] Over Range is displayed and there is no compensation.

You can check the corrected offset value in the analog speed offset [P2-18].

**[Example of handling manual speed command offset correction]**

| Order | Loader Displays | Keys to Use | What to Do |
|---|---|---|---|
| 1 |  |  | Press MODE to display [Cn-00]. |
| 2 |  |  | Press UP or DOWN to move to [Cn-12]. |
| 3 |  |  | Press SET to enter offset correction. |
| 4 |  | 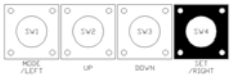 | Press SET to enter offset correction setting.<br>The current offset value displayed. |
| 5 |  |  | Press UP or DOWN to adjust the value. |
| 6 |  | 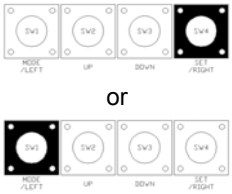 or | Press SET to save the adjusted offset value.<br>[done] is displayed.<br>Press MODE and it will not be saved. |
| 7 |  |  | Press MODE for a second to return to [Cn-12]. |

※ "▯" indicates flickering.

# 5.2.14 Manual Torque Command Offset Correction [Cn-13]

Correct the offset value of analog torque commands manually.

The range of adjustable torque command analog voltage is from +1 V to -1 V. If offset voltage exceeds this range, oVrnG is displayed and there is no correction.

You can check the corrected offset value in the analog torque command offset [P2-21].

[Example of handling manual torque command offset correction]

| Order | Loader Displays | Keys to Use | What to Do |
|---|---|---|---|
| 1 |  |  | Press MODE to display [Cn-00]. |
| 2 | 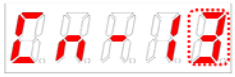 |  | Press UP or DOWN to move to [Cn-13]. |
| 3 |  |  | Press SET to enter offset correction. |
| 4 |  | 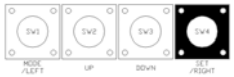 | Press SET to enter offset correction setting.<br>The current offset value displayed. |
| 5 |  |  | Press UP or DOWN to adjust the value. |
| 6 |  | <br>or<br>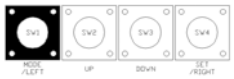 | Press SET to save the adjusted offset value.<br>[done] is displayed.<br>Press MODE and it will not be saved. |
| 7 | 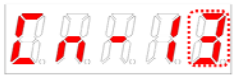 |  | Press MODE for a second to return to the menu screen [Cn-13]. |

※ "▯" indicates flickering.

# 5.2.15 Absolute Encoder Value Reset [Cn-14]

Resets encoder multi-turn data to zero (0).

[Example of absolute encoder reset]

| Order | Loader Displays | Keys to Use | What to Do |
|---|---|---|---|
| 1 |  | 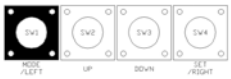 | Press MODE to display [Cn-00]. |
| 2 |  |  | Press UP or DOWN to move to [Cn-14]. |
| 3 |  |  | Press the SET key to enter the state of encoder reset. |
| 4 |  | 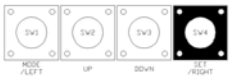<br>or<br>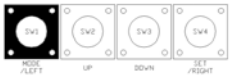 | Press the SET key to reset the data value for absolute encoder multi-turn.<br>[done] is displayed.<br>Press MODE and it is not reset. |
| 7 |  |  | Press MODE for a second to return to the menu screen [Cn-14]. |

※ "▯" indicates flickering.

※ After you reset absolute encoder value, you can see the reset value in [st-18].

# 5.2.16 Instantaneous Maximum Load Factor Initialization [Cn-15]

Reset the instantaneous maximum load factor to 0.

**[Example of initializing the instantaneous maximum load factor]**

| Order | Loader Displays | Keys to Use | What to Do |
|---|---|---|---|
| 1 |  |  | Press MODE to display [Cn-00]. |
| 2 |  | 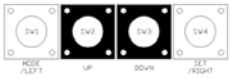 | Press UP or DOWN to move to [Cn-15]. |
| 3 |  | 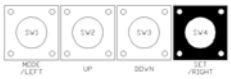 | Press SET to enter instantaneous maximum load factor initialization. |
| 4 |  | 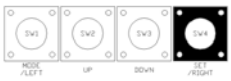 | Press SET and the current maximum load factor is displayed. |
| 5 | <br>or<br> |  | Press UP and the clockwise maximum load factor is displayed.<br>Press DOWN and the counterclockwise maximum load factor is displayed. |
| 6 |  | 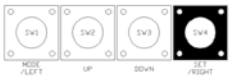<br>or<br>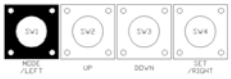 | Press SET and the instantaneous maximum load factor is reset.<br>[done] is displayed.<br>Press MODE and it is not reset. |
| 7 | 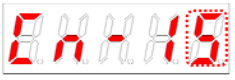 |  | Press MODE for a second to return to [Cn-15]. |

※ "▯" indicates flickering.

# 5.2.17 Parameter Lock [Cn-16]

Sets parameter lock.

**[Example of parameter lock setting]**

| Order | Loader Displays | Keys to Use | What to Do |
|---|---|---|---|
| 1 |  | 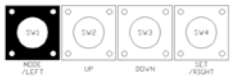 | Press MODE to display [Cn-00]. |
| 2 |  |  | Press UP or DOWN to move to [Cn-16]. |
| 3 |  |  | Press the SET key to enter the state of parameter lock. |
| 4 | <br>or<br> |  | Press the UP key. Then, parameter lock is disabled.<br><br>Press the DOWN key. Then, parameter lock is enabled. |
| 5 |  |  | Press MODE for a second to return to [Cn-16]. |

※ "" indicates flickering.

# 5.2.18 Current Offset [Cn-17]

Saves current offset value to parameter [P0-28]-[P0-29].

**[Example of handling current offset value]**

| Order | Loader Displays | Keys to Use | What to Do |
|---|---|---|---|
| 1 |  | 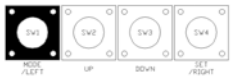 | Press MODE to display [Cn-00]. |
| 2 |  | 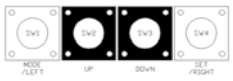 | Press UP or DOWN to move to [Cn-17]. |
| 3 |  |  | Press the SET key to enter the state of current offset setting. |
| 6 |  | 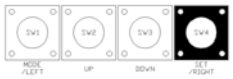 | Press the SET key. Then, phase U current offset value is saved to [P0-28] and phase V current offset value is saved to [P0-29]. |
| 7 |  |  | Press MODE for a second to return to [Cn-17]. |

※ "▯" indicates flickering.

# 6. Communication Protocol

## 6.1 Overview and Communication Specifications

### 6.1.1 Overview

The XDL-L7 servo drive is RS-422 serial communication. By connecting it to a PC or an upper level controller, you can test drive it or change gain tuning parameters.

You can also operate or handle communication of up to 32 axes by connecting multiple XDL-L7 servo drives via a multi-drop method.

#### (1) Serial Communication Access through RS422

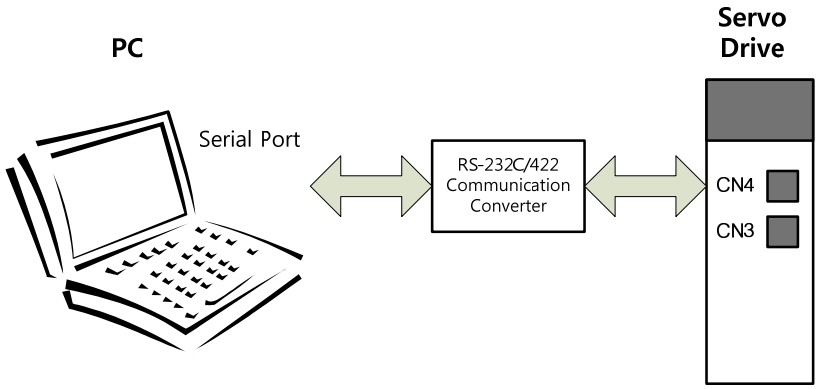


#### (2) Multi-Drop Access through RS422 (up to 32 machines)

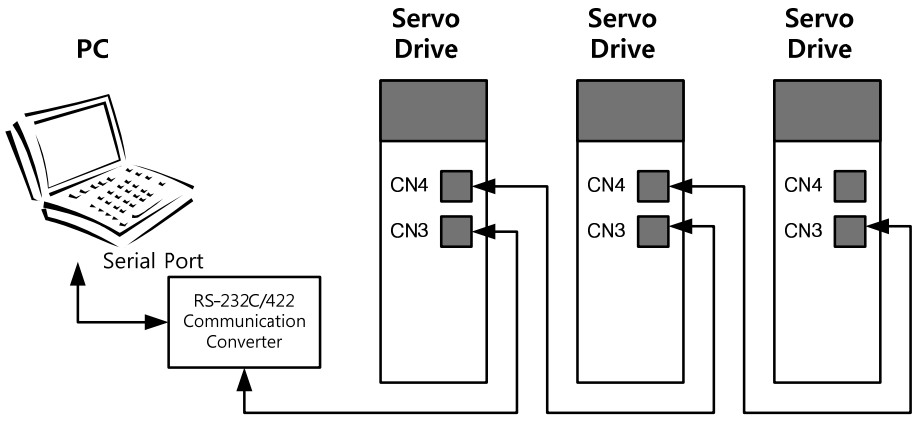


**Note 1)** When using a PC as the upper level controller, you have to use the RS232/RS485 communication converter.

**Note 2)** The CN3 and the CN4 connector pins of the servo drive are connected on an one-to-one basis internally, making multi-drop wiring easy.

## 6.1.2 Communication Specifications and Cable Access Rate

### (1) Communication Specifications

| Item | | Specifications |
|---|---|---|
| Communication standard | | ANSI/TIA/EIA-422 standard |
| Communication protocol | | MODBUS-RTU |
| Data Type | Data bit | 8 bits |
| | Stop bit | 1 bits |
| | Parity | None |
| Synchronous method | | Asynchronous |
| Transmission speed | | 9600 /19200/38400/57600 [bps]<br>[P0-04] can be selected. |
| Transmission distance | | Up to 200 m |
| Current consumption | | 100 ㎃ or below |

### (2) Connection of CN3 and CN4 Connector Pins

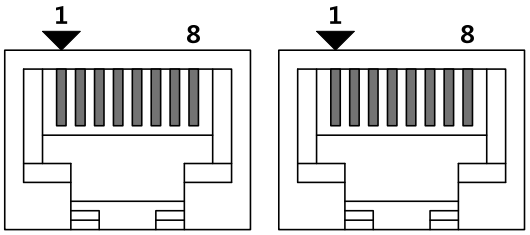


| Pin Number | Pin Function |
|---|---|
| 1 | Not for use. |
| 2 | Terminating resistance connection note 1) |
| 3 | RXD+ |
| 4 | TXD- |
| 5 | TXD+ |
| 6 | RXD- |
| 7 | Not for use. |
| 8 | GND |

**Note 1)** In case of multi access connection, apply terminating resistance by connecting Pin 2 of the last drive to Pin 6 (RXD-).
**Note 2)** Connect TXD+ and TXD-, and RXD+ and RXD- in twisted pairs.
**Note 3)** The TXD and RXD in the above table are based on the servo drive.

# 6.2 Communication Protocol Base Structure

The communication of the XDL-L7 servo drive complies with the international standard MODBUS-RTU protocol. For information about items not covered in this manual, refer to the following standard. (Related standard: Modbus application protocol specification 1.1b, 2006.12.28)

Also, the concept of sending and receiving in this manual is based on the host.

## 6.2.1 Sending/Receiving Packet Structure

The maximum sending/receiving packet length of the MODBUS-RTU protocol is 256 bytes. Make sure that the total length of the sending/receiving packet does not exceed 256 bytes.

The MODBUS-RTU communication mode requires space of at least 3.5 char between the end of the previous packet and the beginning of the next packet as show in the following image to distinguish packets.

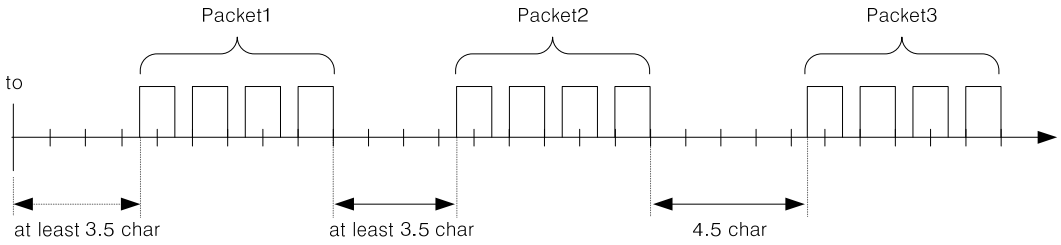


### (1) Sending Packet Structure

| | Additional Address | Function Code | Data | | | Error Check | |
|---|---|---|---|---|---|---|---|
| **Bytes** | **0** | **1** | **2** | **.** | **.** | **n-1** | **n** |
| Details | | Function | Data | . | . | CRC (MSB) | CRC (LSB) |

### (2) Receiving Packet Structure

**[Normal Response]**

| | Additional Address | Function Code | Data | | | Error Check | |
|---|---|---|---|---|---|---|---|
| **Bytes** | **0** | **1** | **2** | **.** | **.** | **n-1** | **n** |
| Details | | Function | Data | . | . | CRC (MSB) | CRC (LSB) |

**[Abnormal Response]**

| | Additional Address | Function Code | Data | Error Check | |
|---|---|---|---|---|---|
| **Bytes** | **0** | **1** | **2** | **3** | **4** |
| Details | | Function+0x80 | Exception code | CRC (MSB) | CRC (LSB) |

## (3) Protocol Packet Code

- Node ID

  Indicates the exchange number of the servo drive to send.

  Set the exchange number of the servo drive to [P0-05].

- Function Code

  The following are the Modbus-RTU standard function codes supported by the XDL-L7 servo drive.

| Category | Command code | Details | Purpose | |
|---|---|---|---|---|
| | | | Read | Write |
| Public function code | 0x03 | Read single register | ○ | |
| | 0x03 | Read multi register | ○ | |
| | 0x06 | Write single register | | ○ |
| | 0x10 | Write multi register | | ○ |
| User defined function code | 0x6A | Read each block register | ○ | |

- Data

  [Sending]: For read register commands, the Modbus address, the number of registers, and the number of bytes will be set. For write register commands, the Modbus address, the number of bytes, and other necessary values will be set.

  [Receiving]: In the case of read register commands, normal responses are received with the same node ID and function code as they are sent. In terms of data, registers are received according to the order of sent registers.

  In the case of write single register commands, the same data as those sent are received. In the case of write multi registers, the start address of the register, whose data were to be used with the write multi register command, and the number of registers are received.

  Abnormal responses consist of node ID, error code, and exception code. The packet structure is the same for all abnormal responses regardless of their function codes.

## (4) CRC

Enter the 16-bit CRC check sum. Send 1 byte of MSB and LSB each.

## (5) Exception Code

The followings are the exception codes for all abnormal responses of all function codes supported in the XDL-L7 servo drive.

| Exception Code | Description |
|---|---|
| 0x01 | Unsupported function codes |
| 0x02 | Invalid register address |
| 0x03 | Non-matching node IDs or CRC check errors |
| 0x04 | Command handling failure |
| 0x05 | Waiting (Preparing data) |
| 0x06 | State of parameter lock |

## 6.2.2 Protocol Command Codes

### (1) Read Single Register (0x03)

Read the single register (16-bit data) value.

| Sending Packet | | |
|---|---|---|
| **Byte** | **Content** | **Value** |
| 0 | | 0x00 |
| 1 | Function | 0x03 |
| 2 | Starting Address Hi | 0x00 |
| 3 | Starting Address Lo | 0x6B |
| 4 | Quantity of Register Hi | 0x00 |
| 5 | Quantity of Register Lo | 0x01 |
| 6 | CRC Hi | |
| 7 | CRC Lo | |

| Normal Receiving Packet | | |
|---|---|---|
| **Byte** | **Content** | **Value** |
| 0 | | 0x00 |
| 1 | Function | 0x03 |
| 2 | Byte Count | 0x02 |
| 3 | Register Value Hi | 0x02 |
| 4 | Register Value Lo | 0x2B |
| 5 | CRC Hi | |
| 6 | CRC Lo | |

| Error Receiving Packet | | |
|---|---|---|
| **Byte** | **Content** | **Value** |
| 0 | | 0x00 |
| 1 | | 0x03 + 0x80 |
| 2 | Exception Code | 0x01 - 0x04 |
| 3 | CRC Hi | |
| 4 | CRC Lo | |

Ex)

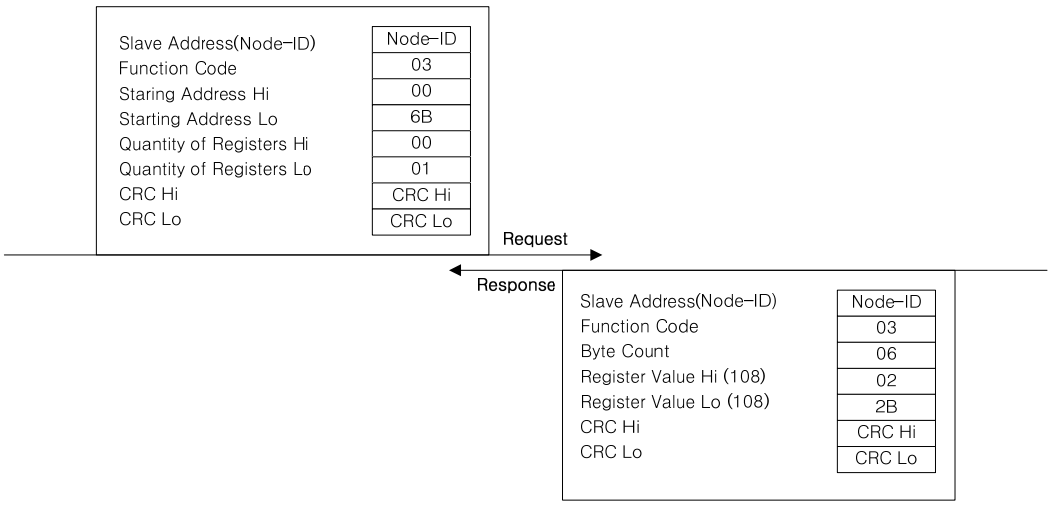

## (2) Read Multi Register (0x03)

Read the continuous register block (16-bit data) value.

| Sending Packet | | |
|---|---|---|
| **Byte** | **Content** | **Value** |
| 0 | | 0x00 |
| 1 | Function | 0x03 |
| 2 | Starting Address Hi | 0x00 |
| 3 | Starting Address Lo | 0x6B |
| 4 | Quantity of Register Hi | 0x00 |
| 5 | Quantity of Register Lo | 0x03 |
| 6 | CRC Hi | |
| 7 | CRC Lo | |

| Normal Receiving Packet | | |
|---|---|---|
| **Byte** | **Content** | **Value** |
| 0 | | 0x00 |
| 1 | Function | 0x03 |
| 2 | Byte Count | 0x06 |
| 3 | Register Value Hi | 0x02 |
| 4 | Register Value Lo | 0x2B |
| 5 | Register Value Hi | 0x00 |
| 6 | Register Value Lo | 0x00 |
| 7 | Register Value Hi | 0x00 |
| 8 | Register Value Lo | 0x64 |
| 9 | CRC Hi | . |
| 10 | CRC Lo | |

| Error Receiving Packet | | |
|---|---|---|
| **Byte** | **Content** | **Value** |
| 0 | | 0x00 |
| 1 | | 0x03 + 0x80 |
| 2 | Exception Code | 0x01 - 0x04 |
| 3 | CRC Hi | |
| 4 | CRC Lo | |

Ex)

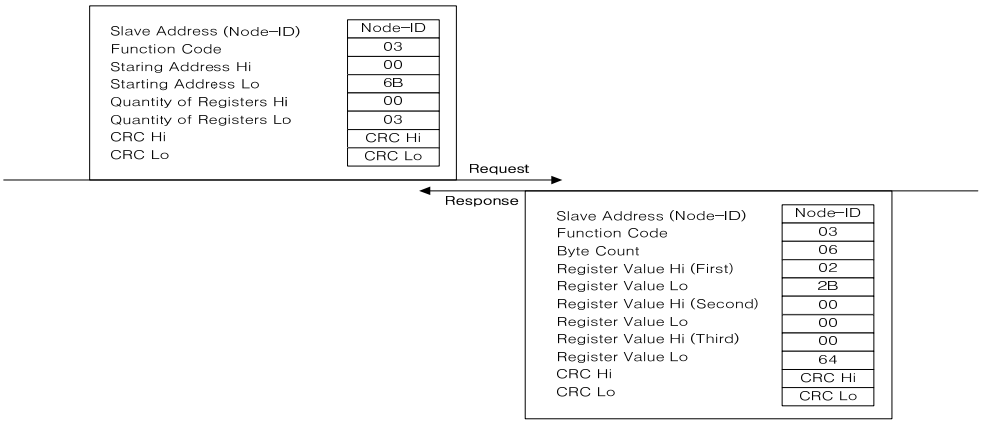

## (3) Write Single Register (0x06)

Write values on the single register (16-bit data).

| Sending Packet | | |
|---|---|---|
| **Byte** | **Content** | **Value** |
| 0 | | 0x00 |
| 1 | Function | 0x06 |
| 2 | Register Address Hi | 0x00 |
| 3 | Register Address Lo | 0x01 |
| 4 | Register Value Hi | 0x00 |
| 5 | Register Value Lo | 0x03 |
| 6 | CRC Hi | |
| 7 | CRC Lo | |

| Normal Receiving Packet | | |
|---|---|---|
| **Byte** | **Content** | **Value** |
| 0 | | 0x00 |
| 1 | Function | 0x06 |
| 2 | Register Address Hi | 0x00 |
| 3 | Register Address Lo | 0x01 |
| 4 | Register Value Hi | 0x00 |
| 5 | Register Value Lo | 0x03 |
| 6 | CRC Hi | |
| 7 | CRC Lo | |

| Error Receiving Packet | | |
|---|---|---|
| **Byte** | **Content** | **Value** |
| 0 | | 0x00 |
| 1 | | 0x06 + 0x80 |
| 2 | Exception Code | 0x01 - 0x06 |
| 3 | CRC Hi | |
| 4 | CRC Lo | |

Ex)

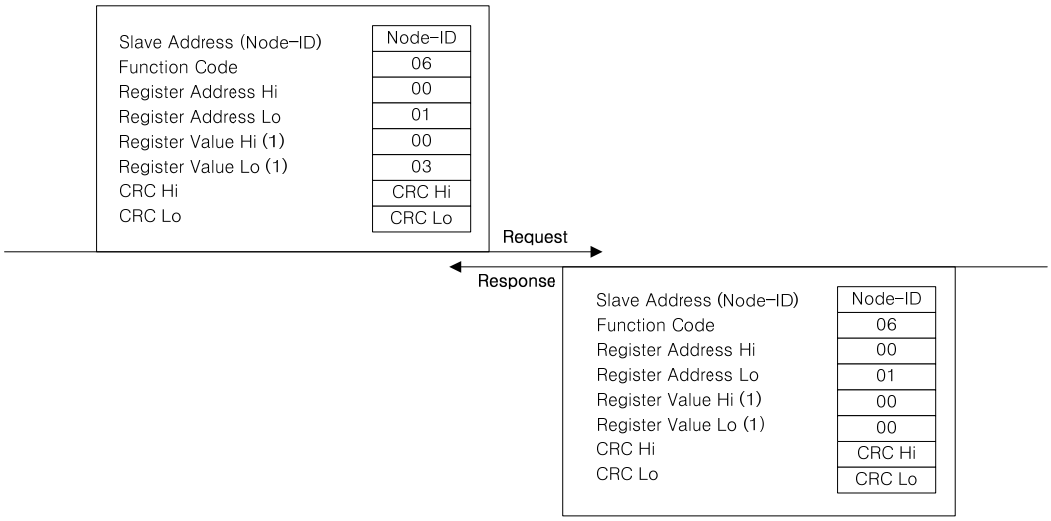

## (4) Write Multi Register (0x10)

Writes values on the continuous register block (16-bit data).

| Sending Packet | | |
|---|---|---|
| **Byte** | **Content** | **Value** |
| 0 | | 0x00 |
| 1 | Function | 0x10 |
| 2 | Starting Address Hi | 0x00 |
| 3 | Starting Address Lo | 0x01 |
| 4 | Quantity of Registers Hi | 0x00 |
| 5 | Quantity of Registers Lo | 0x02 |
| 6 | Byte Count | 0x04 |
| 7 | Register Value Hi | 0x00 |
| 8 | Register Value Lo | 0x0A |
| 9 | Register Value Hi | 0x01 |
| 10 | Register Value Lo | 0x02 |
| 11 | CRC Hi | |
| 12 | CRC Lo | |

| Normal Receiving Packet | | |
|---|---|---|
| **Byte** | **Content** | **Value** |
| 0 | | 0x00 |
| 1 | Function | 0x10 |
| 2 | Starting Address Hi | 0x00 |
| 3 | Starting Address Lo | 0x01 |
| 4 | Quantity of Registers Hi | 0x00 |
| 5 | Quantity of Registers Lo | 0x02 |
| 6 | CRC Hi | |
| 7 | CRC Lo | |

| Error Receiving Packet | | |
|---|---|---|
| **Byte** | **Content** | **Value** |
| 0 | | 0x00 |
| 1 | | 0x10 + 0x80 |
| 2 | Exception Code | 0x01 - 0x04 |
| 3 | CRC Hi | |
| 4 | CRC Lo | |

Ex)

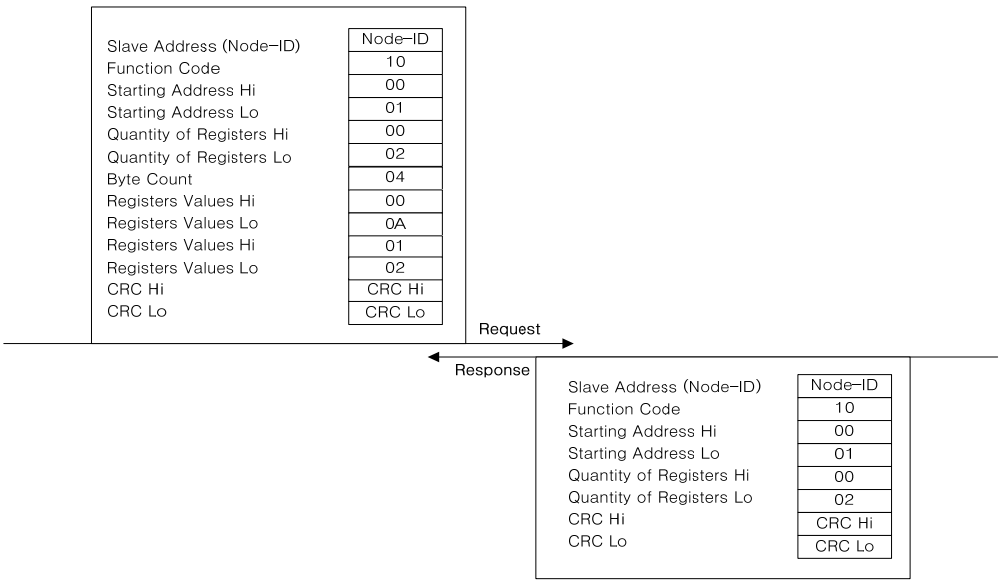

## (5) Read Each Block Register (0x6A)

Read values on the discontinuous register block (16-bit data).

| Sending Packet | | |
|---|---|---|
| **Byte** | **Content** | **Value** |
| 0 | | 0x00 |
| 1 | Function | 0x6A |
| 2 | Byte Count | 0x06 |
| 3 | Address Hi | 0x00 |
| 4 | Address Lo | 0x01 |
| 5 | Address Hi | 0x00 |
| 6 | Address Lo | 0x04 |
| 7 | Address Hi | 0x00 |
| 8 | Address Lo | 0x08 |
| 9 | CRC Hi | |
| 10 | CRC Lo | |

| Normal Receiving Packet | | |
|---|---|---|
| **Byte** | **Content** | **Value** |
| 0 | | 0x00 |
| 1 | Function | 0x6A |
| 2 | Byte Count | 0x06 |
| 3 | Register Value Hi | 0x02 |
| 4 | Register Value Lo | 0x2B |
| 5 | Register Value Hi | 0x00 |
| 6 | Register Value Lo | 0x00 |
| 7 | Register Value Hi | 0x00 |
| 8 | Register Value Lo | 0x64 |
| 9 | CRC Hi | . |
| 10 | CRC Lo | |

| Error Receiving Packet | | |
|---|---|---|
| **Byte** | **Content** | **Value** |
| 0 | | 0x00 |
| 1 | | 0x6A + 0x80 |
| 2 | Exception Code | 0x01 - 0x04 |
| 3 | CRC Hi | |
| 4 | CRC Lo | |

Ex)

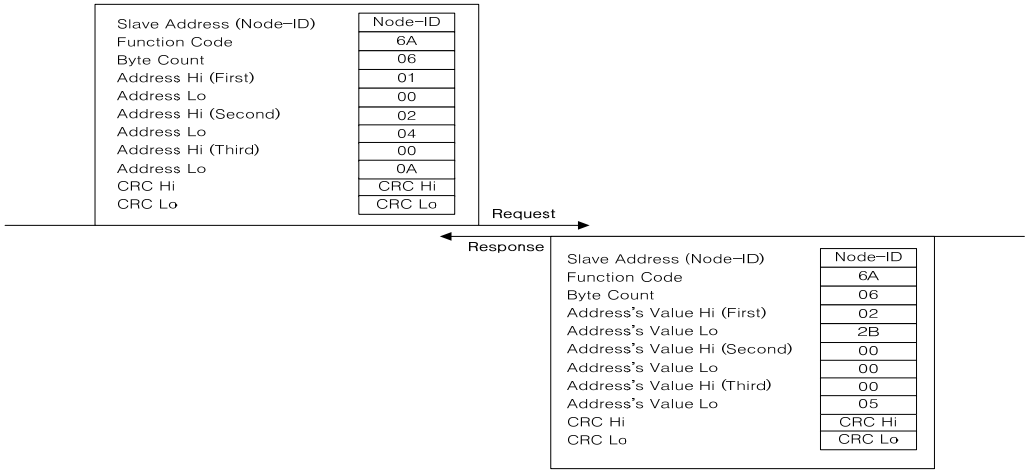

# 6.3 XDL-L7 Servo Drive Communication Address Table

## 6.3.1 Operation Status Parameter Communication Address Table

| Communication Address | Parameter Name | Parameter Number | Material Type |
|---|---|---|---|
| (Decimal Number) | Operation Status Display Parameter | | |
| 0 | Current operation status | St - 00 | INT16<br>BIT0: Alarm<br>BIT1: Servo on<br>BIT2: Warning<br>BIT3: CCW limit<br>BIT4: CW limit<br>BIT5: Zero speed<br>BIT6: In speed<br>BIT7: In position<br>BIT8: Power ready<br>BIT9: Analog command active<br>BIT10 - BIT13: Control mode<br>(0: Trq, 1: Spd, 2: Pos, 3: Spd/Pos, 4: Trq/Spd, 5: Trq/Pos) |
| 2 | Current operation speed | St - 01 | INT16 |
| 4 | Current command speed | St - 02 | INT16 |
| 6 | Tracking position pulse - L | St - 03 | INT32 |
| 8 | Tracking position pulse - H | | |
| 10 | Position command pulse - L | St - 04 | INT32 |
| 12 | Position command pulse - H | | |
| 14 | Remaining position pulse - L | St - 05 | INT32 |
| 16 | Remaining position pulse - H | | |
| 18 | Input pulse frequency – L | St - 06 | INT32 |
| 20 | Input pulse frequency - H | | |
| 22 | Current operation torque | St - 07 | INT16 |
| 24 | Current command torque | St - 08 | INT16 |
| 26 | Accumulated overload rate | St - 09 | INT16 |
| 28 | Instantaneous maximum load factor | St - 10 | INT16 |
| 30 | Torque limit value | St - 11 | INT16 |
| 32 | DC link voltage | St - 12 | UINT16 |
| 34 | Regenerative overload | St - 13 | UINT16 |
| 36 | Input contact status | St - 14 | UINT16 |

| Communication Address | Parameter Name | Parameter Number | Material Type |
|---|---|---|---|
| **(Decimal Number)** | **Operation Status Display Parameter** | | |
| 38 | Output contact status | St - 15 | UINT16 |
| 40 | Single-turn data - L | St - 16 | INT32 |
| 42 | Single-turn data - H | | |
| 44 | Single-turn data (degrees) | St - 17 | UINT16 |
| 46 | Multi-turn data - L | St - 18 | INT32 |
| 48 | Multi-turn data - H | | |
| 50 | Temperature in the servo drive | St - 19 | INT16 |
| 52 | Rated motor speed | St - 20 | UINT16 |
| 54 | Maximum motor speed | St - 21 | UINT16 |
| 56 | Rated motor current | St - 22 | UINT16 |
| 58 | Phase U current offset | St - 23 | INT16 |
| 60 | Phase V current offset | St - 24 | INT16 |
| 62 | Software Version | St - 25 | UINT16<br>BIT0 - BIT4: Drive capacity<br>(1: 100w, 2: 200w, 3: 400w,<br>4: 750w, 5: 1Kw, 6: 3.5Kw)<br>BIT5 - BIT14: Version number<br>BIT15: Encoder type<br>(0: Quadrature, 1: Serial) |
| 64 | FPGA Version | St - 26 | UINT16 |
| 66 | Analog torque command value | St - 27 | INT16 |
| 68 | Reserved | | |
| | | | |
| | | | |
| | | | |

## 6.3.2 System Parameter Communication Address Table

The following table lists Modbus communication addresses for the system parameter group [P0-xx]:

| Communication Address | Parameter Name | Parameter Number | Material Type |
|---|---|---|---|
| (Decimal Number) | System Parameter | | |
| 70 | Motor ID | P0 - 00 | UINT16 |
| 72 | Encoder Type | P0 - 01 | UINT16 |
| 74 | Encoder pulse | P0 - 02 | UINT16 |
| 76 | Select operation mode | P0 - 03 | UINT16 |
| 78 | RS-422 communication speed | P0 - 04 | UINT16 |
| 80 | System ID | P0 - 05 | UINT16 |
| 82 | Main power input mode | P0 - 06 | UINT16 |
| 84 | RST checking time | P0 - 07 | UINT16 |
| 86 | Start-up display parameter | P0 - 08 | UINT16 |
| 88 | Regenerative overload derating | P0 - 09 | UINT16 |
| 90 | Regenerative resistance value | P0 - 10 | UINT16 |
| 92 | Regenerative resistance capacity | P0 - 11 | UINT16 |
| 94 | Overload detection base load factor | P0 - 12 | UINT16 |
| 96 | Continuous overload warning level | P0 - 13 | UINT16 |
| 98 | Encoder output pre-scale - L | P0 - 14 | INT32 |
| 100 | Encoder output pre-scale - H | | |
| 102 | PWM OFF delay time | P0 - 15 | UINT16 |
| 104 | Dynamic brake control mode | P0 - 16 | UINT16 |
| 106 | Function setting bit | P0 - 17 | UINT16 |
| 108 | DAC output mode | P0 - 18 | UINT16 |
| 110 | DAC output offset 1 | P0 - 19 | INT16 |
| 112 | DAC output offset 2 | P0 - 20 | INT16 |
| 114 | Reserved | P0 - 21 | INT16 |
| 116 | Reserved | P0 - 22 | INT16 |
| 118 | DAC output scale 1 | P0 - 23 | UINT16 |
| 120 | DAC output scale 2 | P0 - 24 | UINT16 |
| 122 | Reserved | P0 - 25 | UINT16 |
| 124 | Reserved | P0 - 26 | UINT16 |

| Communication Address | Parameter Name | Parameter Number | Material Type |
|---|---|---|---|
| (Decimal Number) | System Parameter | | |
| 126 | | P0 - 27 | INT16 |
| 128 | | P0 - 28 | INT16 |
| 130 | | P0 - 29 | INT16 |
| 132 | Reserved | | |
| 134 | Reserved | | |
| 136 | Reserved | | |
| 138 | Reserved | | |
| | | | |
| | | | |

### 6.3.3 Control Parameter Communication Address Table

The following table lists Modbus communication addresses for the control parameter group [P1-xx]:

| Communication Address | Parameter Name | Parameter Number | Material Type |
|---|---|---|---|
| (Decimal Number) | Control parameter | | |
| 140 | Inertia ratio | P1 - 00 | UINT16 |
| 142 | Position proportional gain 1 | P1 - 01 | UINT16 |
| 144 | Position proportional gain 2 | P1 - 02 | UINT16 |
| 146 | Position command filter time constant | P1 - 03 | UINT16 |
| 148 | Position feedforward gain | P1 - 04 | UINT16 |
| 150 | Position feedforward filter time constant | P1 - 05 | UINT16 |
| 152 | Speed proportional gain 1 | P1 - 06 | UINT16 |
| 154 | Speed proportional gain 2 | P1 - 07 | UINT16 |
| 156 | Speed integral time constant 1 | P1 - 08 | UINT16 |
| 158 | Speed integral time constant 2 | P1 - 09 | UINT16 |
| 160 | Speed command filter time constant | P1 - 10 | UINT16 |
| 162 | Speed feedback filter time constant | P1 - 11 | UINT16 |
| 164 | Torque command filter time constant | P1 - 12 | UINT16 |
| 166 | Forward rotation torque limit | P1 - 13 | UINT16 |
| 168 | Counterclockwise rotation torque limit | P1 - 14 | UINT16 |
| 170 | Gain switching mode | P1 - 15 | UINT16 |
| 172 | Gain switching time | P1 - 16 | UINT16 |
| 174 | Resonance avoidance operation | P1 - 17 | UINT16 |
| 176 | Resonance avoidance frequency | P1 - 18 | UINT16 |
| 178 | Resonance avoidance range | P1 - 19 | UINT16 |
| 180 | Auto gain tuning speed | P1 - 20 | UINT16 |
| 182 | Auto gain tuning distance | P1 - 21 | UINT16 |
| 184 | Torque control speed limiting mode | P1 - 22 | UINT16 |
| 186 | Speed limit | P1 - 23 | UINT16 |
| 188 | Control P switching torque | P1 - 24 | UINT16 |

| Communication Address | Parameter Name | Parameter Number | Material Type |
|---|---|---|---|
| (Decimal Number) | Control parameter | | |
| 190 | Control P switching speed | P1 - 25 | UINT16 |
| 192 | Control P switching acceleration | P1 - 26 | UINT16 |
| 194 | Control P switching position error | P1 - 27 | UINT16 |
| 196 | Reserved | | |
| 198 | Reserved | | |
| 200 | Reserved | | |
| 202 | Reserved | | |
| 204 | Reserved | | |
| 206 | Reserved | | |
| 208 | Reserved | | |
| 210 | Reserved | | |
| 212 | Reserved | | |
| 214 | Reserved | | |
| 216 | Reserved | | |
| 218 | Reserved | | |
| | | | |
| | | | |

## 6.3.4 Input/Output Parameter Communication Address Table

The following table lists Modbus communication addresses for the input/output (analog and digital) parameter group [P2-xx]:

| Communication Address | Parameter Name | Parameter Number | Material Type |
|---|---|---|---|
| (Decimal Number) | Input/Output Parameter | | |
| 220 | Input signal definition 1 | P2 - 00 | UINT16 |
| 222 | Input signal definition 2 | P2 - 01 | UINT16 |
| 224 | Input signal definition 3 | P2 - 02 | UINT16 |
| 226 | Input signal definition 4 | P2 - 03 | UINT16 |
| 228 | Input signal definition 5 | P2 - 04 | UINT16 |
| 230 | Output signal definition 1 | P2 - 05 | UINT16 |
| 232 | Output signal definition 2 | P2 - 06 | UINT16 |
| 234 | Output signal definition 3 | P2 - 07 | UINT16 |
| 236 | Input signal logic definition 1 | P2 - 08 | UINT16 |
| 238 | Input signal logic definition 2 | P2 - 09 | UINT16 |
| 240 | Output signal logic definition | P2 - 10 | UINT16 |
| 242 | Range of output for position reached | P2 - 11 | UINT16 |
| 244 | Zero speed output range | P2 - 12 | UINT16 |
| 246 | Range of output for speed reached | P2 - 13 | UINT16 |
| 248 | Brake output operation speed | P2 - 14 | UINT16 |
| 250 | Brake output delay time | P2 - 15 | UINT16 |
| 252 | Position pulse clear mode | P2 - 16 | UINT16 |
| 254 | Analog speed command scale | P2 - 17 | UINT16 |
| 256 | Analog speed command offset | P2 - 18 | INT16 |
| 258 | Zero speed clamp speed | P2 - 19 | UINT16 |
| 260 | Analog torque command scale | P2 - 20 | UINT16 |
| 262 | Analog torque command offset | P2 - 21 | INT16 |
| 264 | Zero speed clamp voltage | P2 - 22 | UINT16 |
| 266 | Reserved | | |
| 268 | Reserved | | |
| 270 | Reserved | | |
| 272 | Reserved | | |
| 274 | Reserved | | |
| 276 | Reserved | | |
| 278 | Reserved | | |

### 6.3.5 Speed Operation Parameter Communication Address Table

The following table lists Modbus communication addresses for the speed operation parameter group [P3-xx]:

| Communication Address | Parameter Name | Parameter Number | Material Type |
|---|---|---|---|
| (Decimal Number) | Speed operation parameter | | |
| 280 | Digital speed command 1 | P3 - 00 | INT16 |
| 282 | Digital speed command 2 | P3 - 01 | INT16 |
| 284 | Digital speed command 3 | P3 - 02 | INT16 |
| 286 | Digital speed command 4 | P3 - 03 | INT16 |
| 288 | Digital speed command 5 | P3 - 04 | INT16 |
| 290 | Digital speed command 6 | P3 - 05 | INT16 |
| 292 | Digital speed command 7 | P3 - 06 | INT16 |
| 294 | Z search operation speed setting | P3 - 07 | UINT16 |
| 296 | Speed command acceleration time | P3 - 08 | UINT16 |
| 298 | Speed command deceleration time | P3 - 09 | UINT16 |
| 300 | Speed command S-Curve time | P3 - 10 | UINT16 |
| 302 | Speed operation pattern | P3 - 11 | UINT16 |
| 304 | Manual JOG operation speed | P3 - 12 | INT16 |
| 306 | Program JOG operation speed 1 | P3 - 13 | INT16 |
| 308 | Program JOG operation speed 2 | P3 - 14 | INT16 |
| 310 | Program JOG operation speed 3 | P3 - 15 | INT16 |
| 312 | Program JOG operation speed 4 | P3 - 16 | INT16 |
| 314 | Program JOG operation time 1 | P3 - 17 | UINT16 |
| 316 | Program JOG operation time 2 | P3 - 18 | UINT16 |
| 318 | Program JOG operation time 3 | P3 - 19 | UINT16 |
| 320 | Program JOG operation time 4 | P3 - 20 | UINT16 |
| 322 | Reserved | | |
| 324 | Reserved | | |
| 326 | Reserved | | |
| 328 | Reserved | | |
| | | | |
| | | | |

## 6.3.6 Position Operation Parameter Communication Address Table

The following table lists Modbus communication addresses for the position operation parameter group [P4-xx]:

| Communication Address | Parameter Name | Parameter Number | Material Type |
|---|---|---|---|
| (Decimal Number) | Position operation parameter | | |
| 330 | Position input pulse logic | P4 - 00 | UINT16 |
| 332 | Electronic gear ratio numerator 1 - L | P4 - 01 | INT32 |
| 334 | Electronic gear ratio numerator 1 - H | | |
| 336 | Electronic gear ratio numerator 2 - L | P4 - 02 | INT32 |
| 338 | Electronic gear ratio numerator 2 - H | | |
| 340 | Electronic gear ratio denominator 3 - L | P4 - 03 | INT32 |
| 342 | Electronic gear ratio denominator 3 - H | | |
| 344 | Electronic gear ratio denominator 4 - H | P4 - 04 | INT32 |
| 346 | Electronic gear ratio denominator 4 - L | | |
| 348 | Electronic gear ratio numerator 1 | P4 - 05 | UINT16 |
| 350 | Electronic gear ratio numerator 2 | P4 - 06 | UINT16 |
| 352 | Electronic gear ratio numerator 3 | P4 – 07 | UINT16 |
| 354 | Electronic gear ratio numerator 4 | P4 - 08 | UINT16 |
| 356 | Electronic gear ratio mode | P4 – 09 | UINT16 |
| 358 | Electronic gear ratio numerator offset | P4 - 10 | UINT16 |
| 360 | Position error range - L | P4 - 11 | INT32 |
| 362 | Position error range - H | | |
| 364 | Limit contact function | P4 – 12 | UINT16 |
| 366 | Backlash compensation | P4 - 13 | UINT16 |
| 368 | Pulse input filter | P4 – 14 | UINT16 |
| | | | |
| | | | |

# 7. Product Specifications

## 7.1 Servo motor

### 7.1.1 Product Features

| Servo Motor Type (XML-□) | | SEP09A | SEP15A | SEP22A | SEP30A | | |
|---|---|---|---|---|---|---|---|
| Applicable Drive (XDL-L7□B□) | | XDL-L7□B010□ | XDL-L7□B020□ | XDL-L7□B020□ | XDL-L7□B035□ | | |
| Rated Output | kW | 0.9 | 1.5 | 2.2 | 3.0 | | |
| Rated torque | N·m | 2.86 | 4.77 | 7.0 | 9.55 | | |
| | kgf·cm | 29.23 | 48.72 | 71.46 | 97.44 | | |
| Maximum instantaneous torque | N·m | 8.59 | 14.32 | 21.01 | 28.65 | | |
| | kgf·cm | 87.7 | 146.16 | 214.37 | 292.33 | | |
| Rated rotation speed | r/min | 3000 | | | | | |
| Maximum rotation speed | r/min | 5000 | | | | | |
| Inertia moment | $kg·m^2x10^{-4}$ | 6.659 | 11.999 | 17.339 | 22.679 | | |
| | $gf·cm·s^2$ | 6.795 | 12.244 | 17.693 | 23.142 | | |
| Permitted load inertia | | Motor inertia x10 | | | | | |
| Rated power | kW/s | 12.32 | 19.00 | 28.28 | 40.21 | | |
| Speed and position detector | Standard | Serial Type 19 bits M-turn | | | | | |
| | Option | Serial Type 19 bits S-turn(to be supported) | | | | | |
| Specifications and features | Protection method | Fully enclosed·self-cooling IP65 (excluding axis penetration) | | | | | |
| | Time rating | Continuous | | | | | |
| | Ambient temperature | Operate : 0~40℃, Storage : -10~60℃ | | | | | |
| | Ambient humidity | 20-80% RH (no condensation) | | | | | |
| | Atmosphere | No direct sunlight, corrosive gas, or combustible gas | | | | | |
| | Anti-vibration | Vibration acceleration of 49 $m/s^2$ (5G) | | | | | |

♦Speed-Torque characteristics♦

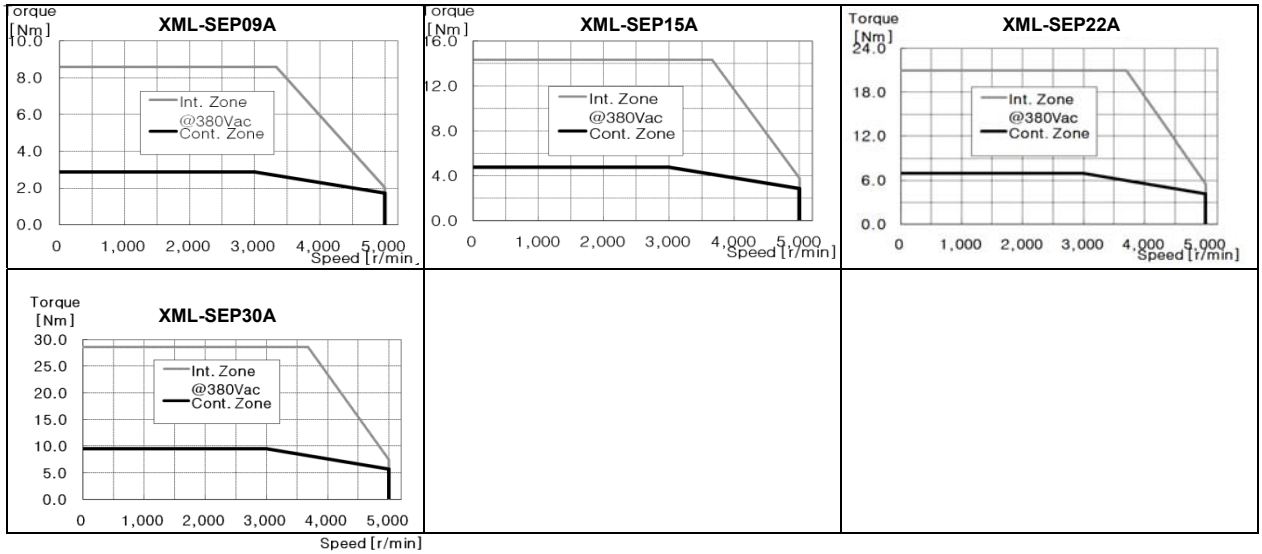

| Servo Motor Type (XML-□) | | SEP06D | SEP11D | SEP16D | SEP22D | | |
|---|---|---|---|---|---|---|---|
| Applicable Drive (XDL-L7□B□) | | XDL-L7□B010□ | XDL-L7□B010□ | XDL-L7□B020□ | XDL-L7□B020□ | | |
| Rated Output | kW | 0.6 | 1.1 | 1.6 | 2.2 | | |
| Rated torque | N·m | 2.86 | 5.25 | 7.64 | 10.5 | | |
| | kgf·cm | 29.23 | 53.59 | 77.95 | 107.19 | | |
| Maximum instantaneous torque | N·m | 8.59 | 15.76 | 22.92 | 31.51 | | |
| | kgf·cm | 87.7 | 160.78 | 233.86 | 321.56 | | |
| Rated rotation speed | r/min | 2000 | | | | | |
| Maximum rotation speed | r/min | 3000 | | | | | |
| Inertia moment | $kg·m^2x10^{-4}$ | 6.659 | 11.999 | 17.339 | 22.679 | | |
| | $gf·cm·s^2$ | 6.795 | 12.244 | 17.693 | 23.142 | | |
| Permitted load inertia | | Motor inertia x10 | | | | | |
| Rated power rate | kW/s | 12.32 | 22.99 | 48.64 | 91.96 | | |
| Speed and position detector | Standard | Serial Type 19 bits M-turn | | | | | |
| | Option | Serial Type 19 bits S-turn(to be supported) | | | | | |
| Specifications and features | Protection method | Fully enclosed·self-cooling IP65 (excluding axis penetration) | | | | | |
| | Time rating | Continuous | | | | | |
| | Ambient temperature | Operate : 0~40℃, Storage : -10~60℃ | | | | | |
| | Ambient humidity | 20-80% RH (no condensation) | | | | | |
| | Atmosphere | No direct sunlight, corrosive gas, or combustible gas | | | | | |
| | Anti-vibration | Vibration acceleration of 49 $m/s^2$ (5G) | | | | | |

♦Speed-Torque characteristics♦

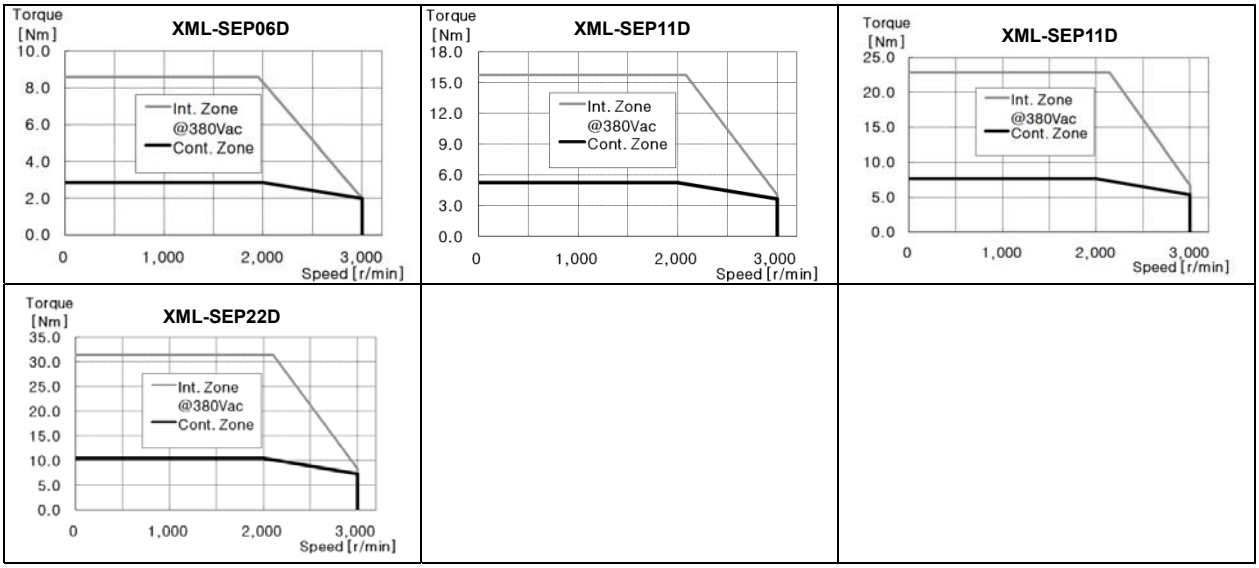

| Servo Motor Type (XML-□) | | SEP05G | SEP09G | SEP13G | SEP17G | | |
|---|---|---|---|---|---|---|---|
| Applicable Drive (XDL-L7□B□) | | XDL-L7□B010□ | XDL-L7□B010□ | XDL-L7□B020□ | XDL-L7□B020□ | | |
| Rated Output | kW | 0.45 | 0.85 | 1.3 | 1.7 | | |
| Rated torque | N·m | 2.86 | 5.41 | 8.28 | 10.82 | | |
| | kgf·cm | 29.23 | 55.22 | 84.45 | 110.43 | | |
| Maximum instantaneous torque | N·m | 8.59 | 16.23 | 24.83 | 32.47 | | |
| | kgf·cm | 87.70 | 165.65 | 253.35 | 331.30 | | |
| Rated rotation speed | r/min | 1500 | | | | | |
| Maximum rotation speed | r/min | 3000 | | | | | |
| Inertia moment | $kg·m^2x10^{-4}$ | 6.659 | 11.999 | 17.339 | 22.679 | | |
| | $gf·cm·s^2$ | 6.795 | 12.244 | 17.693 | 23.142 | | |
| Permitted load inertia | | Motor inertia x10 | | | | | |
| Rated power rate | kW/s | 12.32 | 24.4 | 57.08 | 97.61 | | |
| Speed and position detector | Standard | Serial Type 19 bits M-turn | | | | | |
| | Option | Serial Type 19 bits S-turn(to be supported) | | | | | |
| Specifications and features | Protection method | Fully enclosed·self-cooling IP65 (excluding axis penetration) | | | | | |
| | Time rating | Continuous | | | | | |
| | Ambient temperature | Operate : 0~40℃, Storage : -10~60℃ | | | | | |
| | Ambient humidity | 20-80% RH (no condensation) | | | | | |
| | Atmosphere | No direct sunlight, corrosive gas, or combustible gas | | | | | |
| | Anti-vibration | Vibration acceleration of 49 $m/s^2$ (5G) | | | | | |

♦Speed-Torque characteristics♦

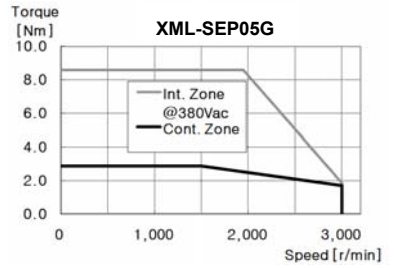


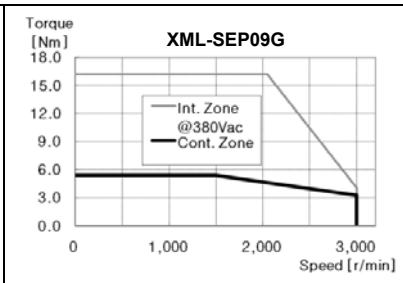


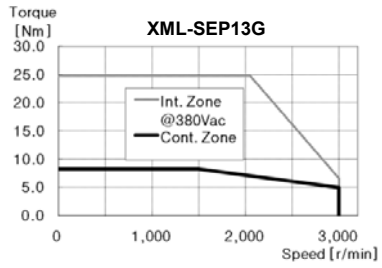


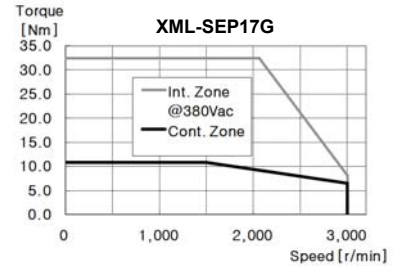

| Servo Motor Type (XML-□) | | SEP03M | SEP06M | SEP09M | SEP12M | | |
|---|---|---|---|---|---|---|---|
| Applicable Drive (XDL-L7□B□) | | XDL-L7□B010□ | XDL-L7□B010□ | XDL-L7□B010□ | XDL-L7□B020□ | | |
| Rated Output | kW | 0.3 | 0.6 | 0.9 | 1.2 | | |
| Rated torque | N·m | 2.86 | 5.73 | 8.59 | 11.46 | | |
| | kgf·cm | 29.23 | 58.47 | 87.70 | 116.93 | | |
| Maximum instantaneous torque | N·m | 8.59 | 17.19 | 25.78 | 34.38 | | |
| | kgf·cm | 87.70 | 175.40 | 263.09 | 350.79 | | |
| Rated rotation speed | r/min | 1000 | | | | | |
| Maximum rotation speed | r/min | 2000 | | | | | |
| Inertia moment | $kg \cdot m^2 x10^{-4}$ | 6.659 | 11.999 | 17.339 | 22.679 | | |
| | $gf \cdot cm \cdot s^2$ | 6.795 | 12.244 | 17.693 | 23.142 | | |
| Permitted load inertia | | Motor inertia x10 | | | | | |
| Rated power rate | kW/s | 12.32 | 27.36 | 42.60 | 57.90 | | |
| Speed and position detector | Standard | Serial Type 19 bits M-turn | | | | | |
| | Option | Serial Type 19 bits S-turn(to be supported) | | | | | |
| Specifications and features | Protection method | Fully enclosed·self-cooling IP65 (excluding axis penetration) | | | | | |
| | Time rating | Continuous | | | | | |
| | Ambient temperature | Operate : 0~40℃, Storage : -10~60℃ | | | | | |
| | Ambient humidity | 20-80% RH (no condensation) | | | | | |
| | Atmosphere | No direct sunlight, corrosive gas, or combustible gas | | | | | |
| | Anti-vibration | Vibration acceleration of 49 $m/s^2$ (5G) | | | | | |

♦Speed-Torque characteristics♦

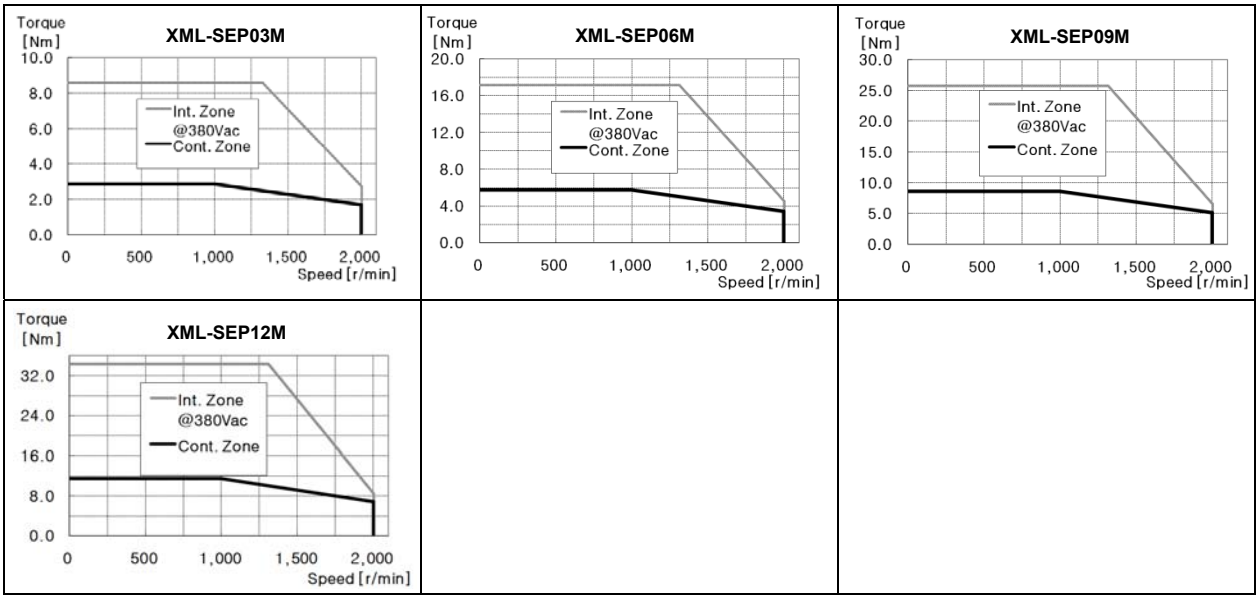

| Servo Motor Type (XML-□) | | SFP30A | SFP50A | SFP22D | SFP35D | SFP55D | SFP75D |
|---|---|---|---|---|---|---|---|
| Applicable Drive (XDL-L7□B□) | | XDL-L7□B035□ | XDL-L7□B075□ | XDL-L7□B020□ | XDL-L7□B035□ | XDL-L7□B075□ | XDL-L7□B075□ |
| Rated Output | kW | 3.0 | 5.0 | 2.2 | 3.5 | 5.5 | 7.5 |
| Rated torque | N·m | 9.55 | 15.92 | 10.50 | 16.71 | 26.26 | 35.81 |
| | kgf·cm | 97.44 | 162.40 | 107.19 | 170.52 | 267.96 | 365.41 |
| Maximum instantaneous torque | N·m | 28.65 | 39.79 | 31.51 | 50.13 | 65.65 | 89.52 |
| | kgf·cm | 292.33 | 406.01 | 321.56 | 511.57 | 669.91 | 913.52 |
| Rated rotation speed | r/min | 3000 | | 2000 | | | |
| Maximum rotation speed | r/min | 5000 | | 3000 | | | |
| Inertia moment | $kg \cdot m^2 x10^{-4}$ | 30.740 | 52.130 | 30.740 | 52.130 | 83.600 | 121.350 |
| | $gf \cdot cm \cdot s^2$ | 31.367 | 53.194 | 31.367 | 53.194 | 85.306 | 123.827 |
| Permitted load inertia | | Motor inertia x5 | | | | | |
| Rated power rate | kW/s | 29.66 | 48.59 | 35.89 | 53.57 | 82.49 | 105.67 |
| Speed and position detector | Standard | Serial Type 19 bits M-turn | | | | | |
| | Option | Serial Type 19 bits S-turn(to be supported) | | | | | |
| Specifications and features | Protection method | Fully enclosed·self-cooling IP65 (excluding axis penetration) | | | | | |
| | Time rating | Continuous | | | | | |
| | Ambient temperature | Operate : 0~40℃, Storage : -10~60℃ | | | | | |
| | Ambient humidity | 20-80% RH (no condensation) | | | | | |
| | Atmosphere | No direct sunlight, corrosive gas, or combustible gas | | | | | |
| | Anti-vibration | Vibration acceleration of 49 $m/s^2$ (5G) | | | | | |

♦Speed-Torque characteristics♦

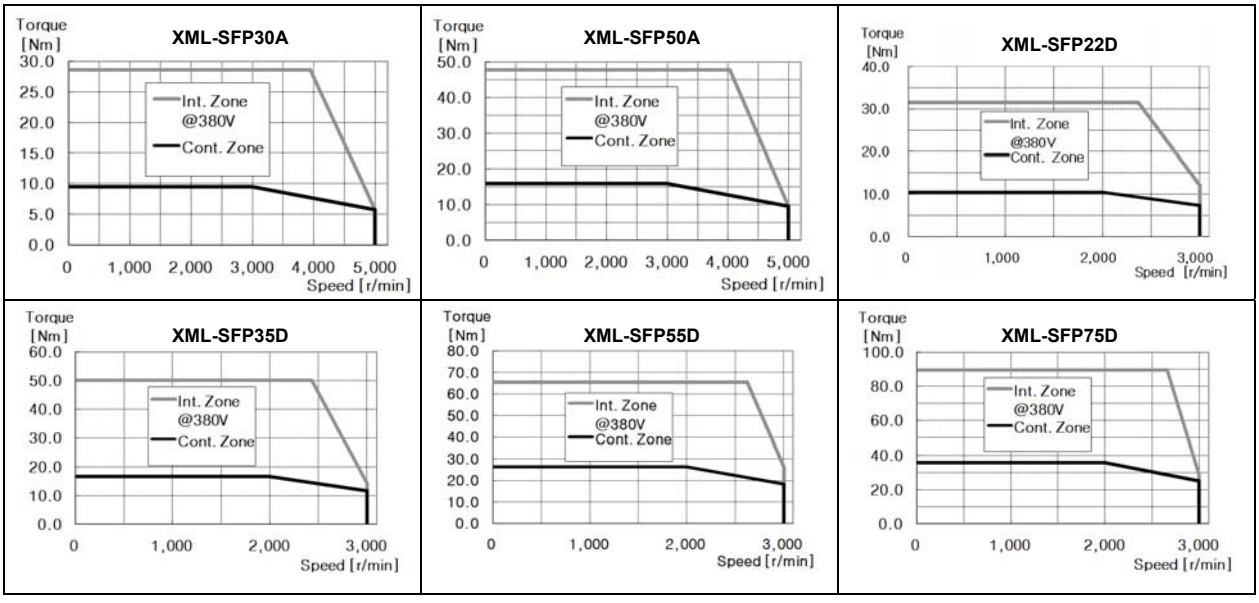

| Servo Motor Type (XML-□) | | SFP20G | SFP30G | SFP44G | SFP60G | SFP75G | |
|---|---|---|---|---|---|---|---|
| Applicable Drive (XDL-L7□B□) | | XDL-L7□B020□ | XDL-L7□B075□ | XDL-L7□B075□ | XDL-L7□B075□ | XDL-L7□B0150□ | |
| Rated Output | kW | 1.8 | 2.9 | 4.4 | 6.0 | 7.5 | |
| Rated torque | N·m | 11.46 | 18.46 | 28.01 | 38.20 | 47.75 | |
| | kgf·cm | 116.93 | 188.39 | 285.83 | 389.77 | 487.21 | |
| Maximum instantaneous torque | N·m | 34.38 | 55.39 | 70.03 | 95.49 | 119.37 | |
| | kgf·cm | 350.79 | 565.16 | 714.57 | 974.42 | 1,218.02 | |
| Rated rotation speed | r/min | 1500 | | | | | |
| Maximum rotation speed | r/min | 3000 | | | | 2500 | |
| Inertia moment | $kg·m^2x10^{-4}$ | 30.740 | 52.130 | 83.600 | 121.350 | 143.820 | |
| | $gf·cm·s^2$ | 31.367 | 53.194 | 85.306 | 123.827 | 146.755 | |
| Permitted load inertia | | Motor inertia x5 | | | | | |
| Rated power rate | kW/s | 42.72 | 65.38 | 93.86 | 120.23 | 158.51 | |
| Speed and position detector | Standard | Serial Type 19 bits M-turn | | | | | |
| | Option | Serial Type 19 bits S-turn(to be supported) | | | | | |
| Specifications and features | Protection method | Fully enclosed·self-cooling IP65 (excluding axis penetration) | | | | | |
| | Time rating | Continuous | | | | | |
| | Ambient temperature | Operate : 0~40℃, Storage : -10~60℃ | | | | | |
| | Ambient humidity | 20-80% RH (no condensation) | | | | | |
| | Atmosphere | No direct sunlight, corrosive gas, or combustible gas | | | | | |
| | Anti-vibration | Vibration acceleration of 49 $m/s^2$ (5G) | | | | | |

♦Speed-Torque characteristics♦

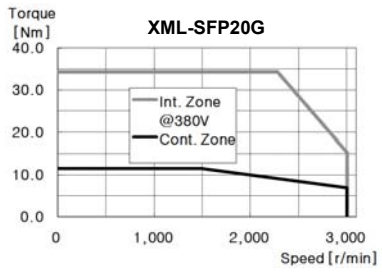


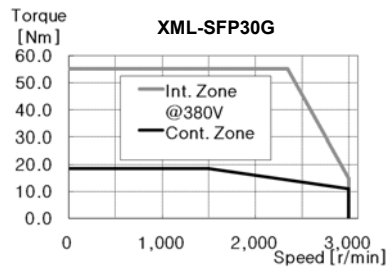


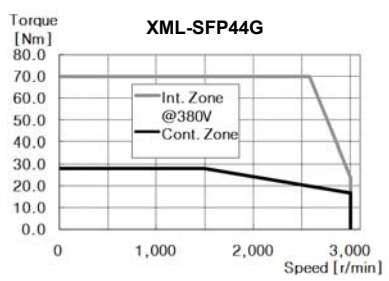


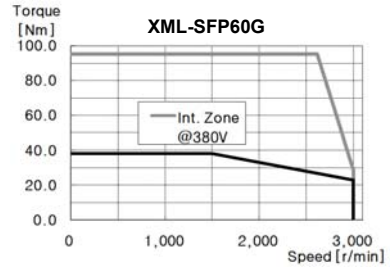


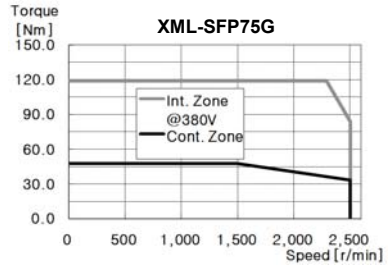

| Servo Motor Type (XML-□) | | SFP12M | SFP20M | SFP30M | SF44M | | |
|---|---|---|---|---|---|---|---|
| Applicable Drive (XDL-L7□B□) | | XDL-L7□B020□ | XDL-L7□B020□ | XDL-L7□B075□ | XDL-L7□B075□ | | |
| Rated Output | kW | 1.2 | 2.0 | 3.0 | 4.4 | | |
| Rated torque | N·m | 11.46 | 19.10 | 28.65 | 42.02 | | |
| | kgf·cm | 116.93 | 194.88 | 292.33 | 428.74 | | |
| Maximum instantaneous torque | N·m | 34.38 | 57.30 | 71.62 | 105.04 | | |
| | kgf·cm | 350.79 | 584.65 | 730.81 | 1,071.86 | | |
| Rated rotation speed | r/min | 1000 | | | | | |
| Maximum rotation speed | r/min | 2000 | | | | | |
| Inertia moment | $kg·m^2x10^{-4}$ | 30.740 | 52.130 | 83.600 | 121.350 | | |
| | $gf·cm·s^2$ | 31.367 | 53.194 | 85.306 | 123.827 | | |
| Permitted load inertia | | Motor inertia x5 | | | | | |
| Rated power rate | kW/s | 42.72 | 69.97 | 98.17 | 145.48 | | |
| Speed and position detector | Standard | Serial Type 19 bits M-turn | | | | | |
| | Option | Serial Type 19 bits S-turn(to be supported) | | | | | |
| Specifications and features | Protection method | Fully enclosed·self-cooling IP65 (excluding axis penetration) | | | | | |
| | Time rating | Continuous | | | | | |
| | Ambient temperature | Operate : 0~40℃, Storage : -10~60℃ | | | | | |
| | Ambient humidity | 20-80% RH (no condensation) | | | | | |
| | Atmosphere | No direct sunlight, corrosive gas, or combustible gas | | | | | |
| | Anti-vibration | Vibration acceleration of 49 $m/s^2$ (5G) | | | | | |

♦Speed-Torque characteristics♦

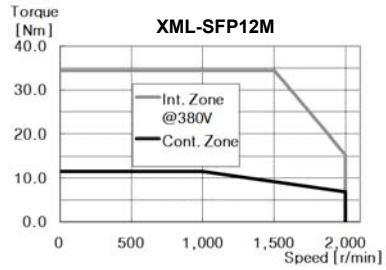


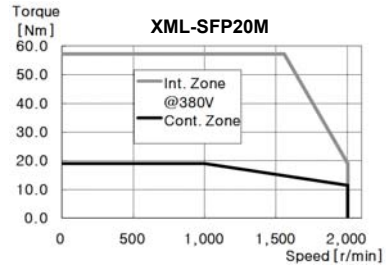


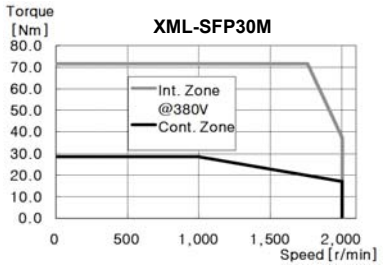


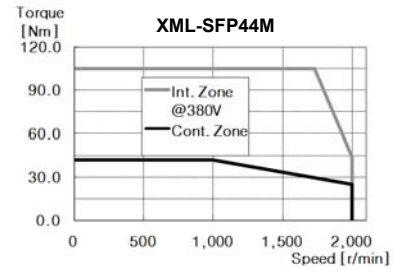

| Servo Motor Type (XML-□) | | SGP22D | SGP35D | SGP55D | SGP75D | SGP110D | |
|---|---|---|---|---|---|---|---|
| Applicable Drive (XDL-L7□B□) | | XDL-L7□B020□ | XDL-L7□B035□ | XDL-L7□B075□ | XDL-L7□B075□ | XDL-L7□B0150□ | |
| Rated Output | kW | 2.2 | 3.5 | 5.5 | 7.5 | 11.0 | |
| Rated torque | N·m | 16.71 | 26.26 | 35.81 | 52.52 | 16.71 | |
| | kgf·cm | 170.52 | 267.96 | 365.41 | 535.93 | 170.52 | |
| Maximum instantaneous torque | N·m | 50.13 | 78.78 | 89.52 | 131.30 | 50.13 | |
| | kgf·cm | 511.57 | 803.89 | 913.52 | 1,339.82 | 511.57 | |
| Rated rotation speed | r/min | 2000 | | | | | |
| Maximum rotation speed | r/min | 3000 | | | 2500 | | |
| Inertia moment | $kg \cdot m^2 x10^{-4}$ | 51.42 | 80.35 | 132.41 | 172.91 | 291.36 | |
| | $gf \cdot cm \cdot s^2$ | 52.47 | 81.99 | 135.11 | 176.44 | 297.31 | |
| Permitted load inertia | | Motor inertia x5 | | | | | |
| Rated power rate | kW/s | 21.46 | 34.76 | 52.08 | 74.16 | 94.65 | |
| Speed and position detector | Standard | Serial Type 19 bits M-turn | | | | | |
| | Option | Serial Type 19 bits S-turn(to be supported) | | | | | |
| Specifications and features | Protection method | Fully enclosed·self-cooling IP65 (excluding axis penetration) | | | | | |
| | Time rating | Continuous | | | | | |
| | Ambient temperature | Operate : 0~40℃, Storage : -10~60℃ | | | | | |
| | Ambient humidity | 20-80% RH (no condensation) | | | | | |
| | Atmosphere | No direct sunlight, corrosive gas, or combustible gas | | | | | |
| | Anti-vibration | Vibration acceleration of 49 $m/s^2$ (5G) | | | | | |

♦Speed-Torque characteristics♦

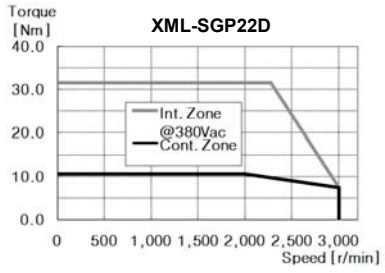


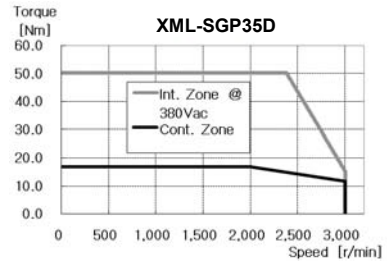


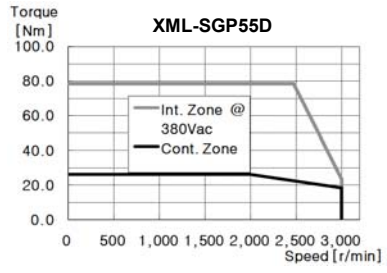


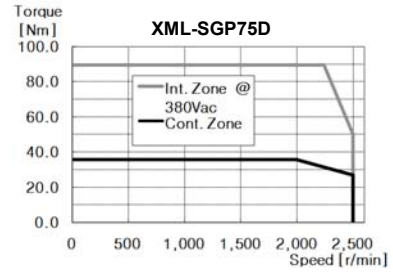


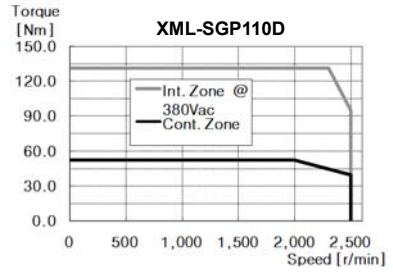

| Servo Motor Type (XML-□) | | SGP20G | SGP30G | SGP44G | SGP60G | SGP85G | SGP110G |
|---|---|---|---|---|---|---|---|
| Applicable Drive (XDL-L7□B□) | | XDL-L7□B020□ | XDL-L7□B075□ | XDL-L7□B075□ | XDL-L7□B075□ | XDL-L7□B150□ | XDL-L7□B150□ |
| Rated Output | kW | 1.8 | 2.9 | 4.4 | 6.0 | 8.5 | 11.0 |
| Rated torque | N·m | 11.46 | 18.46 | 28.01 | 38.20 | 54.11 | 70.03 |
| | kgf·cm | 116.93 | 188.39 | 285.83 | 389.77 | 552.17 | 714.57 |
| Maximum instantaneous torque | N·m | 34.38 | 55.39 | 70.03 | 95.49 | 135.28 | 175.07 |
| | kgf·cm | 350.79 | 565.16 | 714.57 | 974.42 | 1,380.43 | 1,786.43 |
| Rated rotation speed | r/min | 1500 | | | | | |
| Maximum rotation speed | r/min | 3000 | | | 2500 | | 2000 |
| Inertia moment | $kg \cdot m^2 x10^{-4}$ | 51.42 | 80.35 | 132.41 | 172.91 | 291.36 | 51.42 |
| | $gf \cdot cm \cdot s^2$ | 52.47 | 81.99 | 135.11 | 176.44 | 297.31 | 52.47 |
| Permitted load inertia | | Motor inertia x5 | | | | | |
| Rated power rate | kW/s | 25.531 | 42.41 | 59.25 | 84.36 | 100.5 | 168.3 |
| Speed and position detector | Standard | Serial Type 19 bits M-turn | | | | | |
| | Option | Serial Type 19 bits S-turn(to be supported) | | | | | |
| Specifications and features | Protection method | Fully enclosed·self-cooling IP65 (excluding axis penetration) | | | | | |
| | Time rating | Continuous | | | | | |
| | Ambient temperature | Operate : 0~40℃, Storage : -10~60℃ | | | | | |
| | Ambient humidity | 20-80% RH (no condensation) | | | | | |
| | Atmosphere | No direct sunlight, corrosive gas, or combustible gas | | | | | |
| | Anti-vibration | Vibration acceleration of 49 $m/s^2$ (5G) | | | | | |

♦Speed-Torque characteristics♦

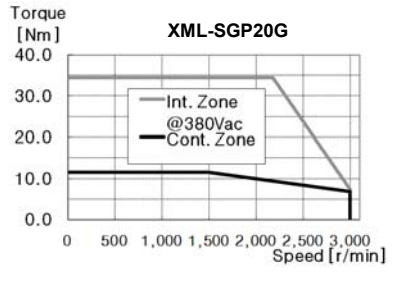


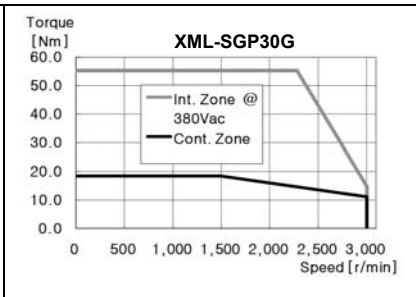


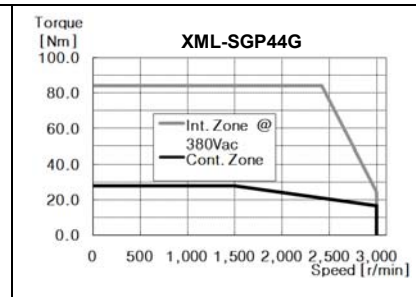


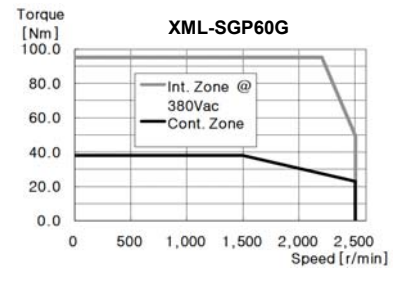


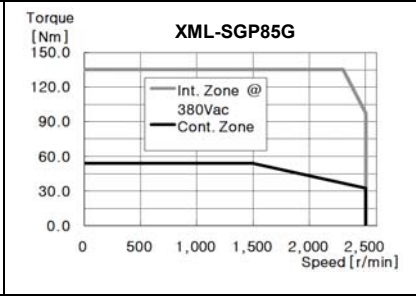


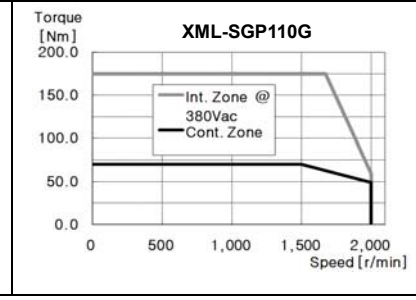

| Servo Motor Type (XML-□) | | SGP150G | SGP12M | SGP20M | SGP30M | SGP44M | SGP60M |
|---|---|---|---|---|---|---|---|
| Applicable Drive (XDL-L7□B□) | | XDL-L7□B150□ | XDL-L7□B020□ | XDL-L7□B020□ | XDL-L7□B075□ | XDL-L7□B075□ | XDL-L7□B150□ |
| Rated Output | kW | 15.0 | 1.2 | 2.0 | 3.0 | 4.4 | 6.0 |
| Rated torque | N·m | 95.49 | 11.46 | 19.10 | 28.65 | 42.02 | 57.30 |
| | kgf·cm | 974.42 | 116.93 | 194.88 | 292.33 | 428.74 | 584.65 |
| Maximum instantaneous torque | N·m | 238.73 | 34.38 | 57.30 | 85.94 | 105.04 | 143.24 |
| | kgf·cm | 2,436.05 | 350.79 | 584.65 | 876.98 | 1,071.86 | 1,461.63 |
| Rated rotation speed | r/min | 1500 | 1000 | | | | |
| Maximum rotation speed | r/min | 2000 | 2000 | | | | |
| Inertia moment | $kg·m^2x10^{-4}$ | 424.5 | 51.42 | 80.35 | 132.41 | 172.91 | 291.36 |
| | $gf·cm·s^2$ | 433.2 | 52.47 | 81.99 | 135.11 | 176.44 | 297.31 |
| Permitted load inertia | | Motor inertia x5 | | | | | |
| Rated power rate | kW/s | 214.8 | 25.53 | 45.39 | 61.97 | 102.08 | 112.64 |
| Speed and position detector | Standard | Serial Type 19 bits M-turn | | | | | |
| | Option | Serial Type 19 bits S-turn(to be supported) | | | | | |
| Specifications and features | Protection method | Fully enclosed·self-cooling IP65 (excluding axis penetration) | | | | | |
| | Time rating | Continuous | | | | | |
| | Ambient temperature | Operate : 0~40℃, Storage : -10~60℃ | | | | | |
| | Ambient humidity | 20-80% RH (no condensation) | | | | | |
| | Atmosphere | No direct sunlight, corrosive gas, or combustible gas | | | | | |
| | Anti-vibration | Vibration acceleration of 49 $m/s^2$ (5G) | | | | | |

♦Speed-Torque characteristics♦

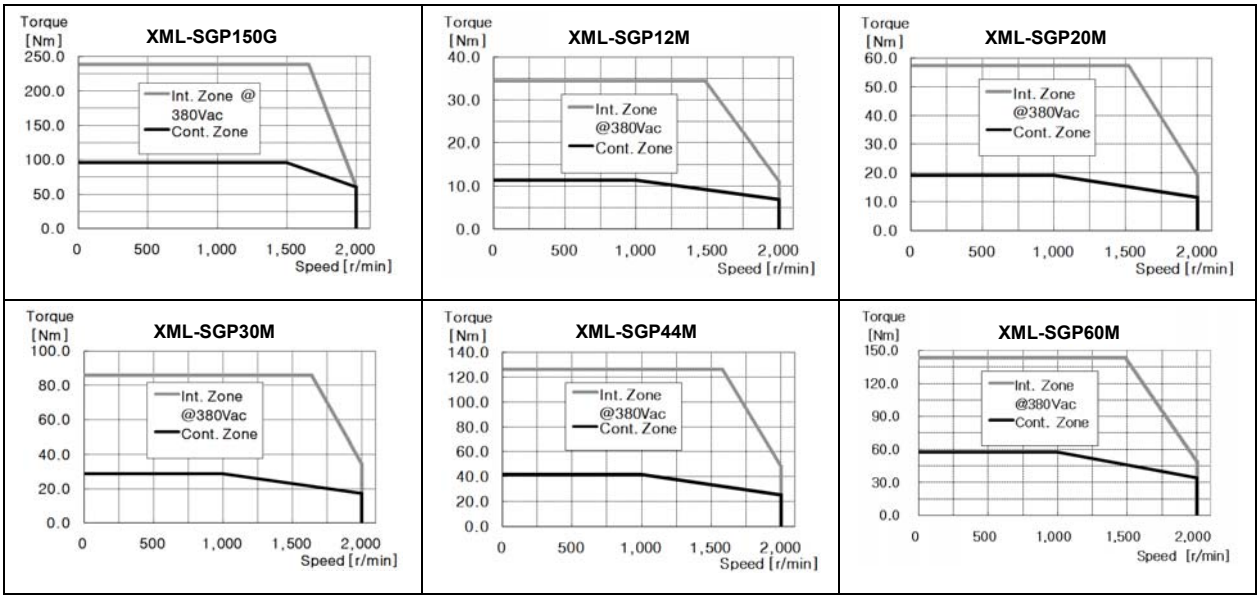

| Servo Motor Type (XML-□) | | FEP09A | FEP15A | FEP22A | FEP30A | | |
|---|---|---|---|---|---|---|---|
| Applicable Drive (XDL-L7□B□) | | XDL-L7□B010□ | XDL-L7□B020□ | XDL-L7□B030□ | XDL-L7□B030□ | | |
| Rated Output | kW | 0.9 | 1.5 | 2.2 | 3.0 | | |
| Rated torque | N·m | 2.86 | 4.77 | 7.0 | 9.55 | | |
| | kgf·cm | 29.23 | 48.72 | 71.46 | 97.44 | | |
| Maximum instantaneous torque | N·m | 8.59 | 14.32 | 21.01 | 28.65 | | |
| | kgf·cm | 87.7 | 146.16 | 214.37 | 292.33 | | |
| Rated rotation speed | r/min | 3000 | | | | | |
| Maximum rotation speed | r/min | 5000 | | | | | |
| Inertia moment | $kg·m^2x10^{-4}$ | 5.659 | 10.179 | 14.619 | 19.040 | | |
| | $gf·cm·s^2$ | 5.774 | 10.387 | 14.917 | 19.429 | | |
| Permitted load inertia | | Motor inertia x10 | | | | | |
| Rated power rate | kW/s | 14.50 | 22.40 | 33.55 | 47.89 | | |
| Speed and position detector | Standard | Serial Type 19 bits M-turn | | | | | |
| | Option | Serial Type 19 bits S-turn(to be supported) | | | | | |
| Specifications and features | Protection method | Fully enclosed·self-cooling IP65 (excluding axis penetration) | | | | | |
| | Time rating | Continuous | | | | | |
| | Ambient temperature | Operate : 0~40℃, Storage : -10~60℃ | | | | | |
| | Ambient humidity | 20-80% RH (no condensation) | | | | | |
| | Atmosphere | No direct sunlight, corrosive gas, or combustible gas | | | | | |
| | Anti-vibration | Vibration acceleration of 49 $m/s^2$ (5G) | | | | | |

♦Speed-Torque characteristics♦

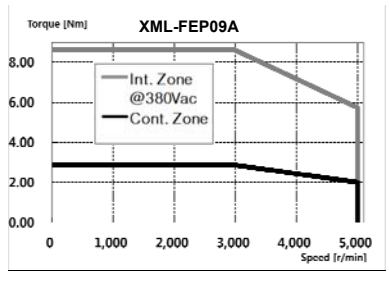


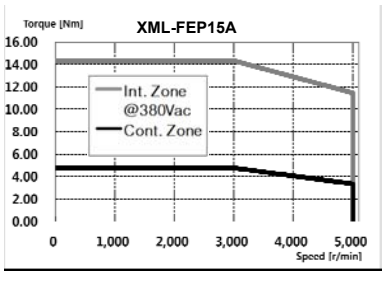


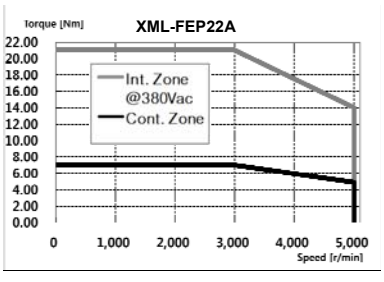


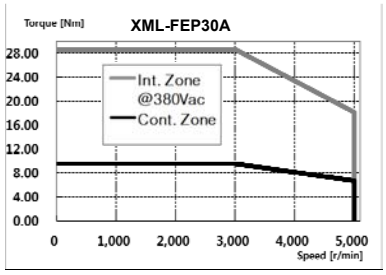

| Servo Motor Type (XML-□) | | FEP06D | FEP11D | FEP16D | FEP22D | | |
|---|---|---|---|---|---|---|---|
| Applicable Drive (XDL-L7□B□) | | XDL-L7□B010□ | XDL-L7□B010□ | XDL-L7□B020□ | XDL-L7□B020□ | | |
| Rated Output | kW | 0.6 | 1.1 | 1.6 | 2.2 | | |
| Rated torque | N·m | 2.86 | 5.25 | 7.64 | 10.5 | | |
| | kgf·cm | 29.23 | 53.59 | 77.95 | 107.19 | | |
| Maximum instantaneous torque | N·m | 8.59 | 15.76 | 22.92 | 31.51 | | |
| | kgf·cm | 87.7 | 160.78 | 233.86 | 321.56 | | |
| Rated rotation speed | r/min | 2000 | | | | | |
| Maximum rotation speed | r/min | 3000 | | | | | |
| Inertia moment | $kg·m^2x10^{-4}$ | 5.659 | 10.179 | 14.619 | 19.040 | | |
| | $gf·cm·s^2$ | 5.774 | 10.387 | 14.917 | 19.429 | | |
| Permitted load inertia | | Motor inertia x10 | | | | | |
| Rated power rate | kW/s | 14.50 | 27.10 | 39.92 | 57.95 | | |
| Speed and position detector | Standard | Serial Type 19 bits M-turn | | | | | |
| | Option | Serial Type 19 bits S-turn(to be supported) | | | | | |
| Specifications and features | Protection method | Fully enclosed·self-cooling IP65 (excluding axis penetration) | | | | | |
| | Time rating | Continuous | | | | | |
| | Ambient temperature | Operate : 0~40℃, Storage : -10~60℃ | | | | | |
| | Ambient humidity | 20-80% RH (no condensation) | | | | | |
| | Atmosphere | No direct sunlight, corrosive gas, or combustible gas | | | | | |
| | Anti-vibration | Vibration acceleration of 49 $m/s^2$ (5G) | | | | | |

♦Speed-Torque characteristics♦

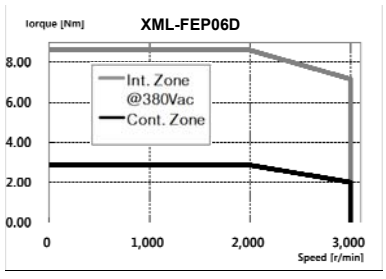


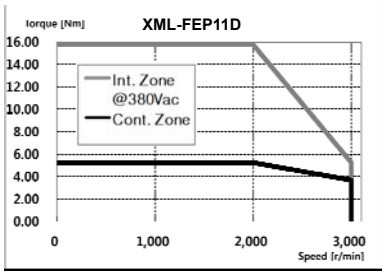


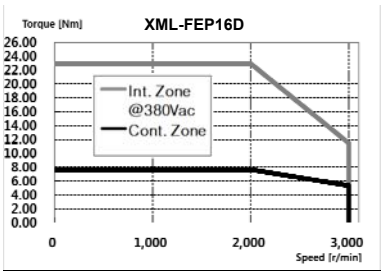


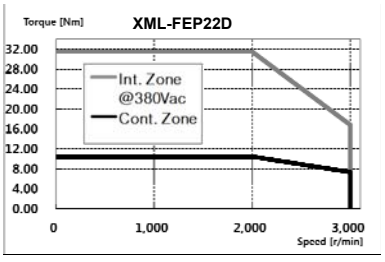

| Servo Motor Type (XML-□) | | FEP05G | FEP09G | FEP13G | FEP17G | | |
|---|---|---|---|---|---|---|---|
| Applicable Drive (XDL-L7□B□) | | XDL-L7□B010□ | XDL-L7□B010□ | XDL-L7□B020□ | XDL-L7□B020□ | | |
| Rated Output | kW | 0.45 | 0.85 | 1.3 | 1.7 | | |
| Rated torque | N·m | 2.86 | 5.41 | 8.28 | 10.82 | | |
| | kgf·cm | 29.23 | 55.22 | 84.45 | 110.43 | | |
| Maximum instantaneous torque | N·m | 8.59 | 16.23 | 24.83 | 32.47 | | |
| | kgf·cm | 87.70 | 165.65 | 253.35 | 331.30 | | |
| Rated rotation speed | r/min | 1500 | | | | | |
| Maximum rotation speed | r/min | 3000 | | | | | |
| Inertia moment | $kg·m^2x10^{-4}$ | 5.659 | 10.179 | 14.619 | 19.040 | | |
| | $gf·cm·s^2$ | 5.774 | 10.387 | 14.917 | 19.429 | | |
| Permitted load inertia | | Motor inertia x10 | | | | | |
| Rated power rate | kW/s | 14.50 | 28.77 | 46.85 | 61.52 | | |
| Speed and position detector | Standard | Serial Type 19 bits M-turn | | | | | |
| | Option | Serial Type 19 bits S-turn(to be supported) | | | | | |
| Specifications and features | Protection method | Fully enclosed·self-cooling IP65 (excluding axis penetration) | | | | | |
| | Time rating | Continuous | | | | | |
| | Ambient temperature | Operate : 0~40℃, Storage : -10~60℃ | | | | | |
| | Ambient humidity | 20-80% RH (no condensation) | | | | | |
| | Atmosphere | No direct sunlight, corrosive gas, or combustible gas | | | | | |
| | Anti-vibration | Vibration acceleration of 49 $m/s^2$ (5G) | | | | | |

♦Speed-Torque characteristics♦

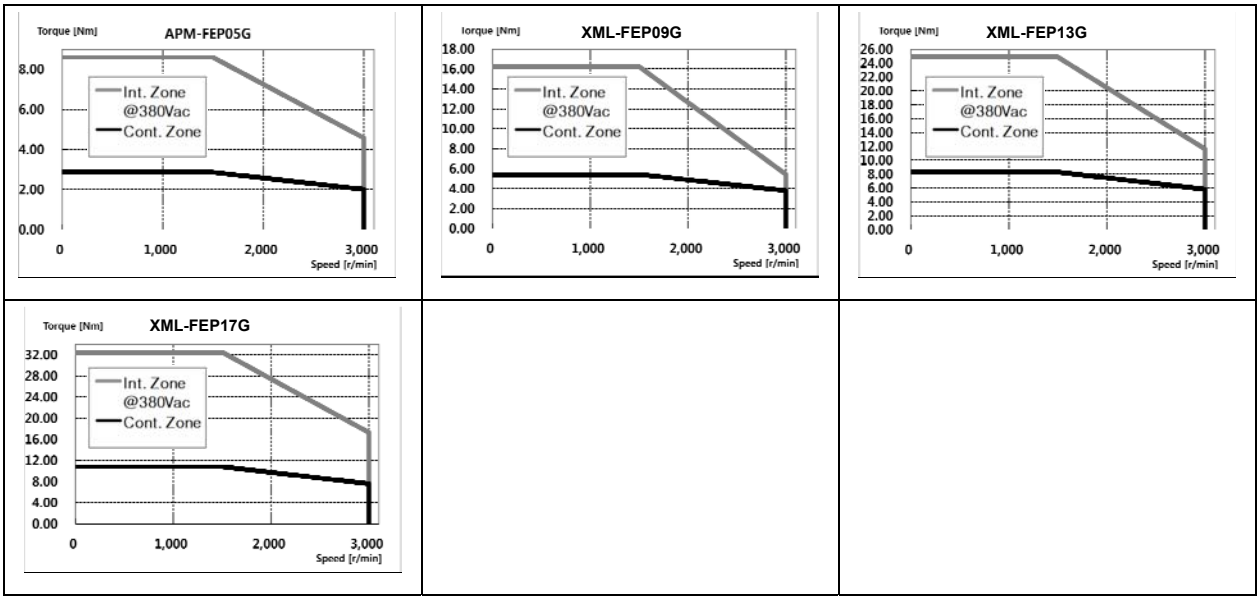

| Servo Motor Type (XML-□) | | FEP03M | FEP06M | FEP09M | FEP12M | | |
|---|---|---|---|---|---|---|---|
| Applicable Drive (XDL-L7□B□) | | XDL-L7□B010□ | XDL-L7□B010□ | XDL-L7□B010□ | XDL-L7□B020□ | | |
| Rated Output | kW | 0.3 | 0.6 | 0.9 | 1.2 | | |
| Rated torque | N·m | 2.86 | 5.73 | 8.59 | 11.46 | | |
| | kgf·cm | 29.23 | 58.47 | 87.70 | 116.93 | | |
| Maximum instantaneous torque | N·m | 8.59 | 17.19 | 25.78 | 34.38 | | |
| | kgf·cm | 87.70 | 175.40 | 263.09 | 350.79 | | |
| Rated rotation speed | r/min | 1000 | | | | | |
| Maximum rotation speed | r/min | 2000 | | | | | |
| Inertia moment | $kg·m^2x10^{-4}$ | 5.659 | 10.179 | 14.619 | 19.040 | | |
| | $gf·cm·s^2$ | 5.774 | 10.387 | 14.917 | 19.429 | | |
| Permitted load inertia | | Motor inertia x10 | | | | | |
| Rated power rate | kW/s | 14.50 | 32.25 | 50.53 | 68.97 | | |
| Speed and position detector | Standard | Serial Type 19 bits M-turn | | | | | |
| | Option | Serial Type 19 bits S-turn(to be supported) | | | | | |
| Specifications and features | Protection method | Fully enclosed·self-cooling IP65 (excluding axis penetration) | | | | | |
| | Time rating | Continuous | | | | | |
| | Ambient temperature | Operate : 0~40℃, Storage : -10~60℃ | | | | | |
| | Ambient humidity | 20-80% RH (no condensation) | | | | | |
| | Atmosphere | No direct sunlight, corrosive gas, or combustible gas | | | | | |
| | Anti-vibration | Vibration acceleration of 49 $m/s^2$ (5G) | | | | | |

♦Speed-Torque characteristics♦

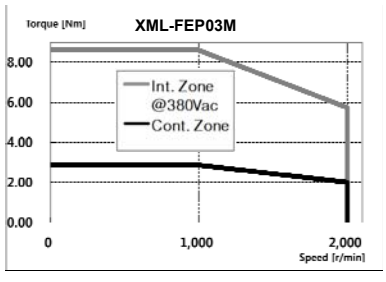


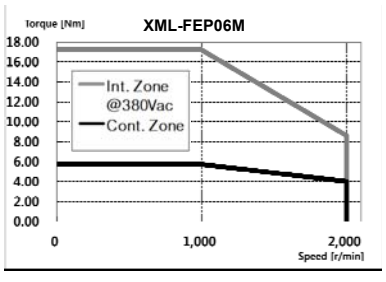


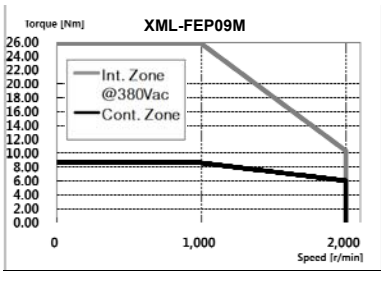


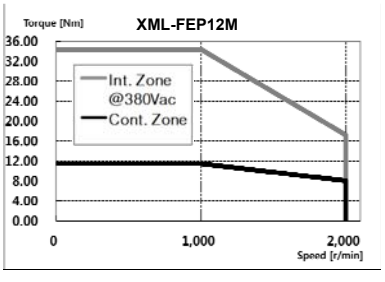

| Servo Motor Type (XML-□) | | FFP30A | FFP50A | FFP22D | FFP35D | FFP55D | FFP75D |
|---|---|---|---|---|---|---|---|
| Applicable Drive (XDL-L7□B□) | | XDL-L7□B035□ | XDL-L7□B075□ | XDL-L7□B020□ | XDL-L7□B035□ | XDL-L7□B075□ | XDL-L7□B075□ |
| Rated Output | kW | 3.0 | 5.0 | 2.2 | 3.5 | 5.5 | 7.5 |
| Rated torque | N·m | 9.55 | 15.92 | 10.50 | 16.71 | 26.26 | 35.81 |
| | kgf·cm | 97.44 | 162.40 | 107.19 | 170.52 | 267.96 | 365.41 |
| Maximum instantaneous torque | N·m | 28.65 | 39.79 | 31.51 | 50.13 | 65.65 | 89.52 |
| | kgf·cm | 292.33 | 406.01 | 321.56 | 511.57 | 669.91 | 913.52 |
| Rated rotation speed | r/min | 3000 | | 2000 | | | |
| Maximum rotation speed | r/min | 5000 | | 3000 | | | 2500 |
| Inertia moment | $kg \cdot m^2 x10^{-4}$ | 27.960 | 46.560 | 27.960 | 46.560 | 73.850 | 106.730 |
| | $gf \cdot cm \cdot s^2$ | 28.531 | 47.510 | 28.531 | 47.510 | 75.357 | 108.908 |
| Permitted load inertia | | Motor inertia x5 | | | | | |
| Rated power rate | kW/s | 32.61 | 54.40 | 39.46 | 59.98 | 93.38 | 120.15 |
| Speed and position detector | Standard | Serial Type 19 bits M-turn | | | | | |
| | Option | Serial Type 19 bits S-turn(to be supported) | | | | | |
| Specifications and features | Protection method | Fully enclosed·self-cooling IP65 (excluding axis penetration) | | | | | |
| | Time rating | Continuous | | | | | |
| | Ambient temperature | Operate : 0~40℃, Storage : -10~60℃ | | | | | |
| | Ambient humidity | 20-80% RH (no condensation) | | | | | |
| | Atmosphere | No direct sunlight, corrosive gas, or combustible gas | | | | | |
| | Anti-vibration | Vibration acceleration of 49 $m/s^2$ (5G) | | | | | |

♦Speed-Torque characteristics♦

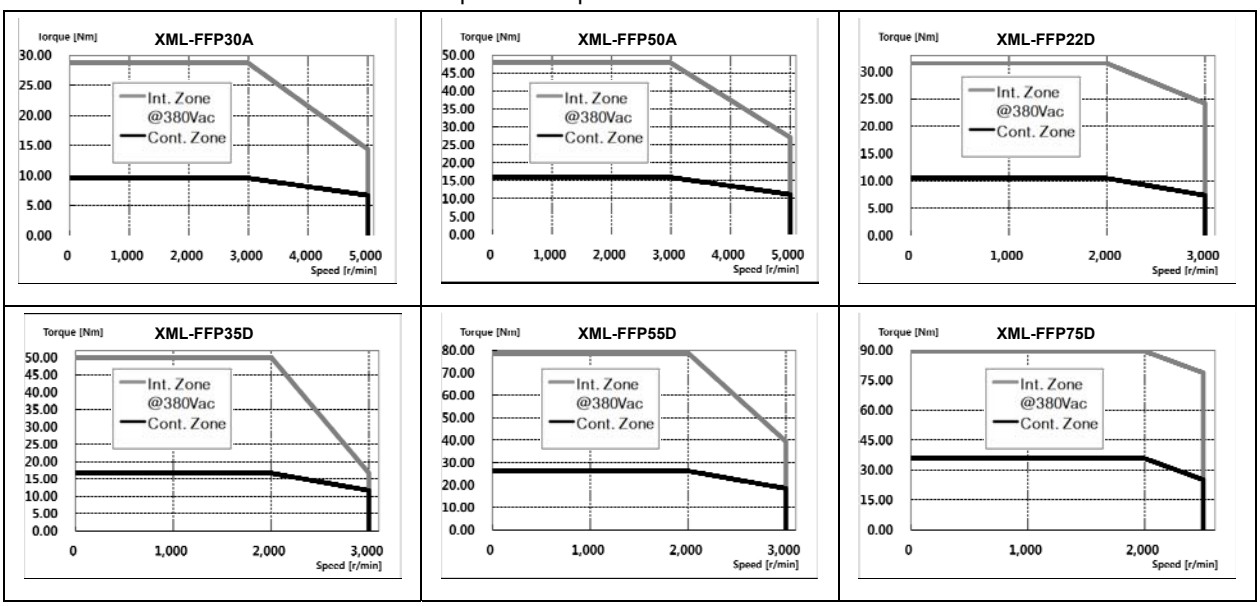

| Servo Motor Type (XML-□) | | FFP20G | FFP30G | FFP44G | FFP60G | FFP75G | |
|---|---|---|---|---|---|---|---|
| Applicable Drive (XDL-L7□B□) | | XDL-L7□B020□ | XDL-L7□B035□ | XDL-L7□B075□ | XDL-L7□B075□ | XDL-L7□B075□ | |
| Rated Output | kW | 1.8 | 2.9 | 4.4 | 6.0 | 7.5 | |
| Rated torque | N·m | 11.46 | 18.46 | 28.01 | 38.20 | 47.75 | |
| | kgf·cm | 116.93 | 188.39 | 285.83 | 389.77 | 487.21 | |
| Maximum instantaneous torque | N·m | 34.38 | 55.39 | 84.03 | 95.49 | 119.37 | |
| | kgf·cm | 350.79 | 565.16 | 857.49 | 974.42 | 1,218.02 | |
| Rated rotation speed | r/min | 1500 | | | | | |
| Maximum rotation speed | r/min | 3000 | 2700 | 3000 | 2500 | 2200 | |
| Inertia moment | $kg·m^2x10^{-4}$ | 27.960 | 46.560 | 73.850 | 106.730 | 131.290 | |
| | $gf·cm·s^2$ | 28.531 | 47.510 | 75.357 | 108.908 | 133.969 | |
| Permitted load inertia | | Motor inertia x5 | | | | | |
| Rated power rate | kW/s | 46.96 | 73.21 | 106.25 | 136.70 | 173.64 | |
| Speed and position detector | Standard | Serial Type 19 bits M-turn | | | | | |
| | Option | Serial Type 19 bits S-turn(to be supported) | | | | | |
| Specifications and features | Protection method | Fully enclosed·self-cooling IP65 (excluding axis penetration) | | | | | |
| | Time rating | Continuous | | | | | |
| | Ambient temperature | Operate : 0~40℃, Storage : -10~60℃ | | | | | |
| | Ambient humidity | 20-80% RH (no condensation) | | | | | |
| | Atmosphere | No direct sunlight, corrosive gas, or combustible gas | | | | | |
| | Anti-vibration | Vibration acceleration of 49 $m/s^2$ (5G) | | | | | |

♦Speed-Torque characteristics♦

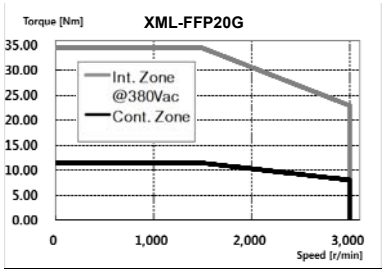


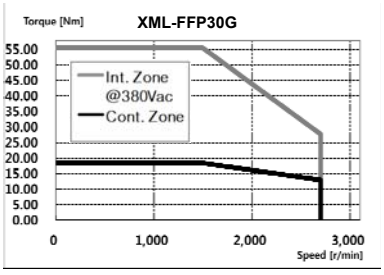


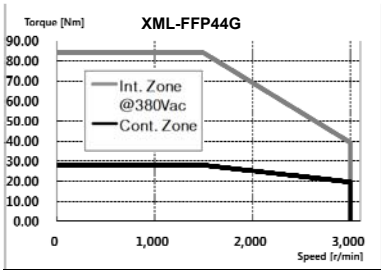


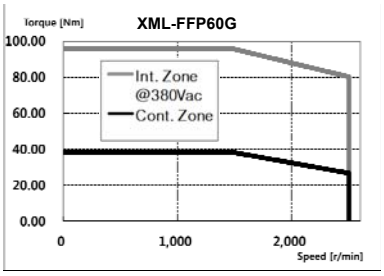


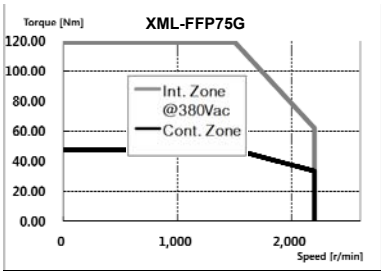

| Servo Motor Type (XML-□) | | FFP12M | FFP20M | FFP30M | FFP44M | | |
|---|---|---|---|---|---|---|---|
| Applicable Drive (XDL-L7□B□) | | XDL-L7□B020□ | XDL-L7□B020□ | XDL-L7□B075□ | XDL-L7□B075□ | | |
| Rated Output | kW | 1.2 | 2.0 | 3.0 | 4.4 | | |
| Rated torque | N·m | 11.46 | 19.10 | 28.65 | 42.02 | | |
| | kgf·cm | 116.93 | 194.88 | 292.33 | 428.74 | | |
| Maximum instantaneous torque | N·m | 34.38 | 57.30 | 85.94 | 126.05 | | |
| | kgf·cm | 350.79 | 584.65 | 876.98 | 1286.23 | | |
| Rated rotation speed | r/min | 1000 | | | | | |
| Maximum rotation speed | r/min | 2000 | | 1700 | 2000 | | |
| Inertia moment | $kg·m^2x10^{-4}$ | 27.960 | 46.560 | 73.850 | 106.730 | | |
| | $gf·cm·s^2$ | 28.531 | 47.510 | 75.357 | 108.908 | | |
| Permitted load inertia | | Motor inertia x5 | | | | | |
| Rated power rate | kW/s | 46.96 | 78.38 | 111.13 | 165.41 | | |
| Speed and position detector | Standard | Serial Type 19 bits M-turn | | | | | |
| | Option | Serial Type 19 bits S-turn(to be supported) | | | | | |
| Specifications and features | Protection method | Fully enclosed·self-cooling IP65 (excluding axis penetration) | | | | | |
| | Time rating | Continuous | | | | | |
| | Ambient temperature | Operate : 0~40℃, Storage : -10~60℃ | | | | | |
| | Ambient humidity | 20-80% RH (no condensation) | | | | | |
| | Atmosphere | No direct sunlight, corrosive gas, or combustible gas | | | | | |
| | Anti-vibration | Vibration acceleration of 49 $m/s^2$ (5G) | | | | | |

♦Speed-Torque characteristics♦

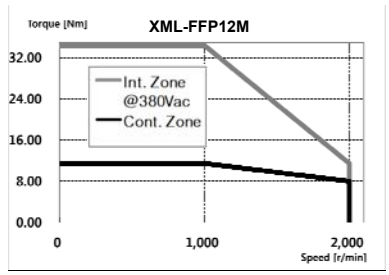


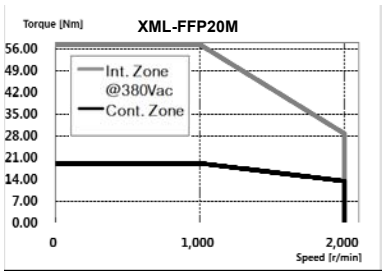


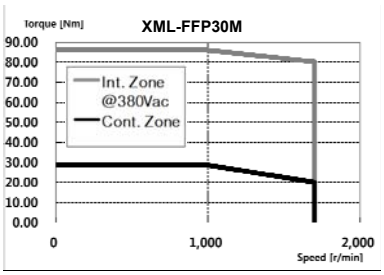


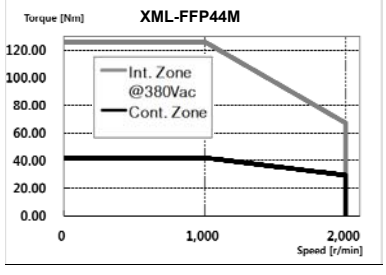

| Servo Motor Type (XML-□) | | FGP22D | FGP35D | FGP55D | FGP75D | | |
|---|---|---|---|---|---|---|---|
| Applicable Drive (XDL-L7□B□) | | XDL-L7□B020□ | XDL-L7□B035□ | XDL-L7□B075□ | XDL-L7□B075□ | | |
| Rated Output | kW | 2.2 | 3.5 | 5.5 | 7.5 | | |
| Rated torque | N·m | 10.50 | 16.71 | 26.26 | 35.81 | | |
| | kgf·cm | 107.19 | 170.52 | 267.96 | 365.41 | | |
| Maximum instantaneous torque | N·m | 31.51 | 50.13 | 78.78 | 89.52 | | |
| | kgf·cm | 321.56 | 511.57 | 803.89 | 913.52 | | |
| Rated rotation speed | r/min | 2000 | | | | | |
| Maximum rotation speed | r/min | 3000 | 2700 | 3000 | 2500 | | |
| Inertia moment | $kg·m^2x10^{-4}$ | 41.13 | 71.53 | 117.72 | 149.40 | | |
| | $gf·cm·s^2$ | 41.67 | 72.99 | 120.12 | 152.45 | | |
| Permitted load inertia | | Motor inertia x5 | | | | | |
| Rated power rate | kW/s | 26.83 | 39.04 | 58.58 | 85.83 | | |
| Speed and position detector | Standard | Serial Type 19 bits M-turn | | | | | |
| | Option | Serial Type 19 bits S-turn(to be supported) | | | | | |
| Specifications and features | Protection method | Fully enclosed·self-cooling IP65 (excluding axis penetration) | | | | | |
| | Time rating | Continuous | | | | | |
| | Ambient temperature | Operate : 0~40℃, Storage : -10~60℃ | | | | | |
| | Ambient humidity | 20-80% RH (no condensation) | | | | | |
| | Atmosphere | No direct sunlight, corrosive gas, or combustible gas | | | | | |
| | Anti-vibration | Vibration acceleration of 49 $m/s^2$ (5G) | | | | | |

♦Speed-Torque characteristics♦

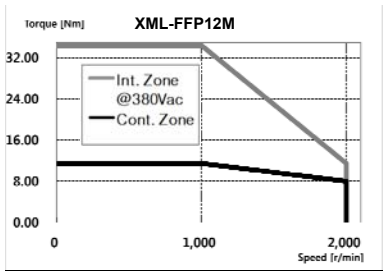


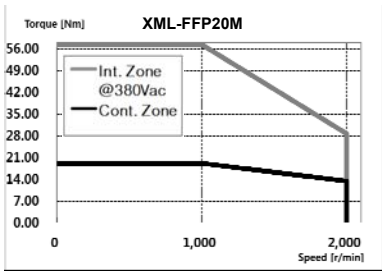


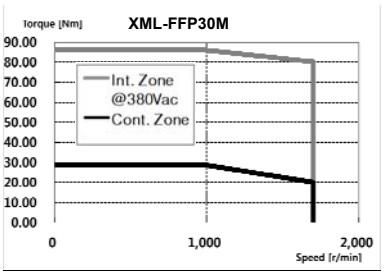


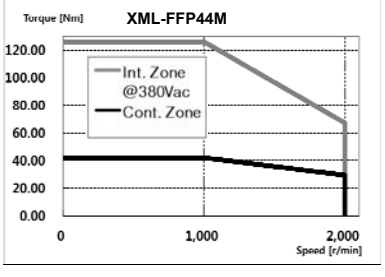

| Servo Motor Type (XML-□) | | FGP20G | FGP30G | FGP44G | FGP60G | | |
|---|---|---|---|---|---|---|---|
| Applicable Drive (XDL-L7□B□) | | XDL-L7□B020□ | XDL-L7□B035□ | XDL-L7□B075□ | XDL-L7□B075□ | | |
| Rated Output | kW | 1.8 | 2.9 | 4.4 | 6.0 | | |
| Rated torque | N·m | 11.46 | 18.46 | 28.01 | 38.20 | | |
| | kgf·cm | 116.93 | 188.39 | 285.83 | 389.77 | | |
| Maximum instantaneous torque | N·m | 34.38 | 55.39 | 84.03 | 95.49 | | |
| | kgf·cm | 350.79 | 565.16 | 857.49 | 974.42 | | |
| Rated rotation speed | r/min | 1500 | | | | | |
| Maximum rotation speed | r/min | 3000 | 2700 | 3000 | 2500 | | |
| Inertia moment | $kg·m^2x10^{-4}$ | 51.42 | 80.35 | 132.41 | 172.91 | | |
| | $gf·cm·s^2$ | 52.47 | 81.99 | 135.11 | 176.44 | | |
| Permitted load inertia | | Motor inertia x5 | | | | | |
| Rated power rate | kW/s | 25.53 | 45.39 | 61.97 | 102.08 | | |
| Speed and position detector | Standard | Serial Type 19 bits M-turn | | | | | |
| | Option | Serial Type 19 bits S-turn(to be supported) | | | | | |
| Specifications and features | Protection method | Fully enclosed·self-cooling IP65 (excluding axis penetration) | | | | | |
| | Time rating | Continuous | | | | | |
| | Ambient temperature | Operate : 0~40℃, Storage : -10~60℃ | | | | | |
| | Ambient humidity | 20-80% RH (no condensation) | | | | | |
| | Atmosphere | No direct sunlight, corrosive gas, or combustible gas | | | | | |
| | Anti-vibration | Vibration acceleration of 49 $m/s^2$ (5G) | | | | | |

♦Speed-Torque characteristics♦

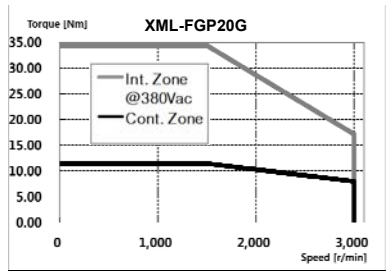


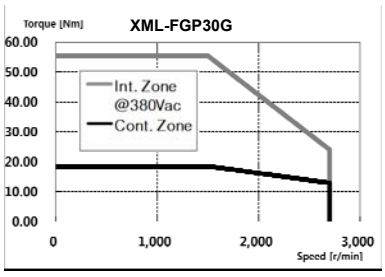


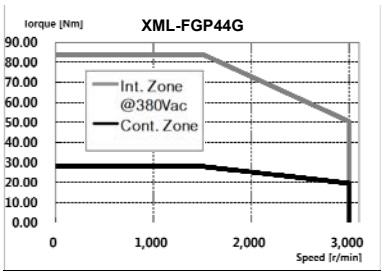


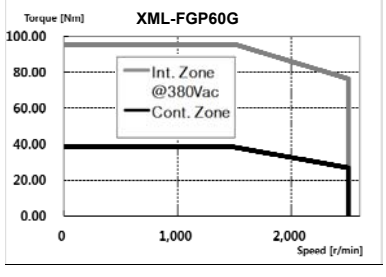

| Servo Motor Type (XML-□) | | FGP12M | FGP20M | FGP30M | FGP44M | | |
|---|---|---|---|---|---|---|---|
| Applicable Drive (XDL-L7□B□) | | XDL-L7□B020□ | XDL-L7□B020□ | XDL-L7□B075□ | XDL-L7□B075□ | | |
| Rated Output | kW | 1.2 | 2.0 | 3.0 | 4.4 | | |
| Rated torque | N·m | 11.46 | 19.10 | 28.65 | 42.02 | | |
| | kgf·cm | 116.93 | 194.88 | 292.33 | 428.74 | | |
| Maximum instantaneous torque | N·m | 34.38 | 57.30 | 85.94 | 126.05 | | |
| | kgf·cm | 350.79 | 584.65 | 876.98 | 1,071.86 | | |
| Rated rotation speed | r/min | 1000 | | | | | |
| Maximum rotation speed | r/min | 2000 | | | | | |
| Inertia moment | $kg·m^2x10^{-4}$ | 51.42 | 80.35 | 132.41 | 172.91 | | |
| | $gf·cm·s^2$ | 52.47 | 81.99 | 135.11 | 176.44 | | |
| Permitted load inertia | | Motor inertia x5 | | | | | |
| Rated power rate | kW/s | 25.53 | 45.39 | 61.97 | 102.08 | | |
| Speed and position detector | Standard | Serial Type 19 bits M-turn | | | | | |
| | Option | Serial Type 19 bits S-turn(to be supported) | | | | | |
| Specifications and features | Protection method | Fully enclosed·self-cooling IP65 (excluding axis penetration) | | | | | |
| | Time rating | Continuous | | | | | |
| | Ambient temperature | Operate : 0~40℃, Storage : -10~60℃ | | | | | |
| | Ambient humidity | 20-80% RH (no condensation) | | | | | |
| | Atmosphere | No direct sunlight, corrosive gas, or combustible gas | | | | | |
| | Anti-vibration | Vibration acceleration of 49 $m/s^2$ (5G) | | | | | |

♦Speed-Torque characteristics♦

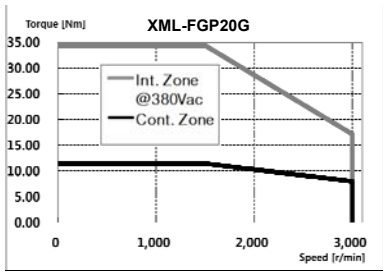


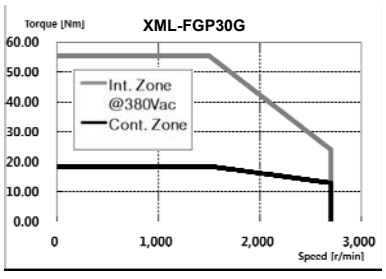


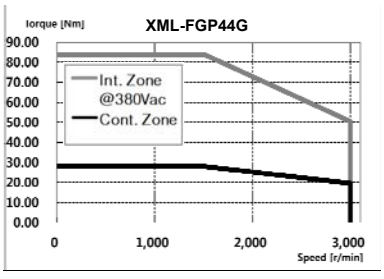


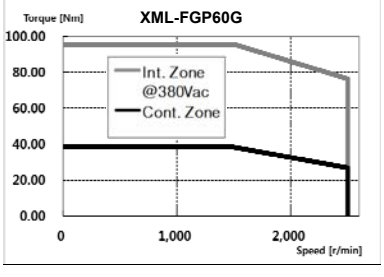

## ■ Heat Sink Specifications

| Category | Dimension (mm) | Category |
|---|---|---|
| AP13 | 350x350x20 | Aluminum |
| AP18 | 550x550x30 | |
| AP22 | 650x650x35 | |

**Note 1)** Product specifications are the measurement data after Heat Sink is mounted.

## ■ Electronic Brake Specifications





| Applicable Motor Series | XML-SEP/FEP | XML-SFP/FFP | XML-SGP/FGP |
|---|---|---|---|
| Purpose | Holding after stop. | Holding after stop. | Holding after stop. |
| Input voltage [V] | DC 24V | DC 24V | DC 90 V |
| Static friction torque (N•m) | 10.4 | 40 | 74 |
| Capacity [W] | 19.4 | 25 | 32 |
| Coil resistance [Ω] | 29.6 | 23 | 327 |
| Rated current [A] | 0.81 | 1.04 | 0.28 |
| Braking method | Spring brake | Spring brake | Spring brake |
| Insulation grade | Grade F | Grade F | Grade F |

**Note 1)** DO NOT apply DC24V power (for interface only) to electronic brake. You MUST use power source only for electronic brake.
**Note 2)** Electronic brake installed in our servo motor applies same specifications for each series.
**Note 3)** Electric brakes are designed to maintain a stop. Never use them for absolute braking.
**Note 4)** The characteristics of the electric brakes were measured at 20°C.
**Note 5)** These brake specifications are subject to change. Check the voltage specifications on your specific motor.

## 7.1.2 Outline Diagram

■ **SEP Series | XML-SEP09A, SEP06D, SEP05G, SEP03M**
**XML-SEP15A, SEP11D, SEP09G, SEP06M**
**XML-SEP22A, SEP16D, SEP13G, SEP09M**
**XML-SEP30A, SEP22D, SEP17G, SEP12M**

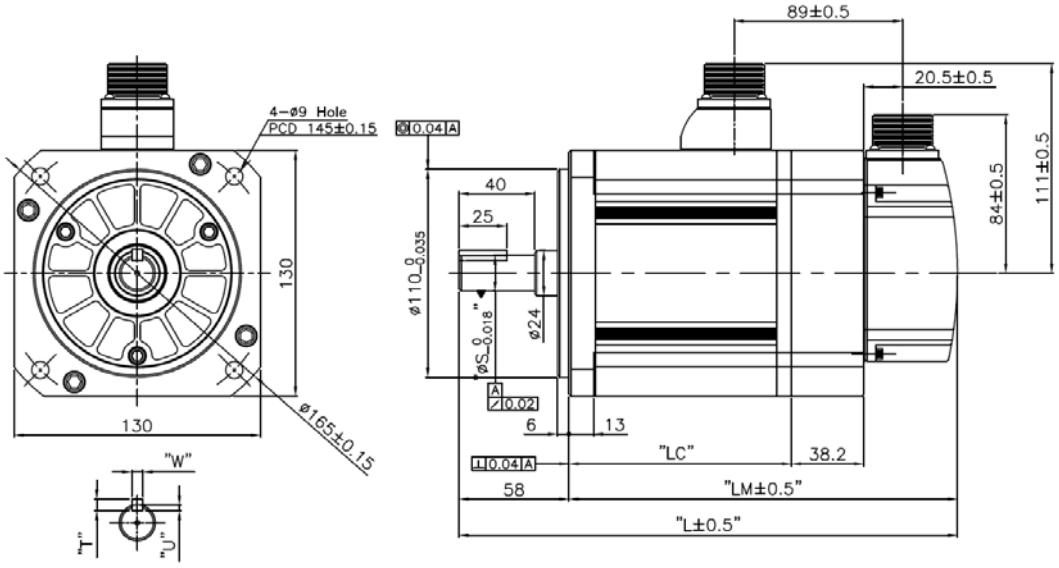


<Power Connector>



| Pin No. | Color | Phase |
|---|---|---|
| A | Red | U |
| B | White | V |
| C | Black | W |
| D | Green | FG |

Plug : MS3102A20-4P

<Brake Connector>



| Pin No. | Phase | Pin No. | Phase |
|---|---|---|---|
| A | U | D | F/G |
| B | V | E | BK+ |
| C | W | F | BK- |

Plug : MS3102A20-15P

<S-turn Encoder Connector>

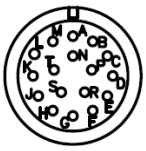

| Pin No. | Phase | Pin No. | Phase |
|---|---|---|---|
| A | MA | M | - |
| B | $\overline{MA}$ | N | - |
| C | SL | P | - |
| D | $\overline{SL}$ | R | - |
| E | - | H | +5V |
| F | - | G | 0V |
| K | - | J | SHIELD |
| L | - | | |

Plug : MS3102A20-29P

<M-turn Encoder Connector>

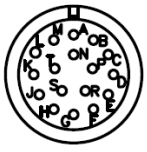

| Pin No. | Phase | Pin No. | Phase |
|---|---|---|---|
| A | MA | M | - |
| B | $\overline{MA}$ | N | - |
| C | SL | P | - |
| D | $\overline{SL}$ | R | - |
| E | VOD_B | H | +5V |
| F | GND_B | G | 0V |
| K | - | J | SHIELD |
| L | - | | |

Plug : MS3102A20-29P

| Model | External Dimensions | | | Shaft, Key Dimensions | | | |
|---|---|---|---|---|---|---|---|
| | L | LM | LC | S | T | W | U |
| SE09A,SE06D,SE05G,SE03M | 201.3(239.3) | 143.3(181.3) | 93.8(93.6) | 19 | 5 | 5 | 3 |
| SE15A,SE11D,SE09G,SE06M | 225.3(263.3) | 167.3(205.3) | 117.8(117.6) | 19 | 5 | 5 | 3 |
| SE22A,SE16D,SE13G,SE09M | 249.3(287.3) | 191.3(229.3) | 141.8(141.6) | 22 | 6 | 6 | 3.5 |
| SE30A,SE22D,SE17G,SE12M | 273.3(311.3) | 215.3(253.3) | 165.8(165.6) | 22 | 6 | 6 | 3.5 |

**Note 1)** Use DC power (24 V) to operate the brake.
**Note 2)** The sizes in parentheses apply when attached to the brakes.

## ■ SFP Series | XML-SFP30A, SFP22D, SFP20G, SFP12M
## XML-SFP50A, SFP35D, SFP30G, SFP20M
## XML-SFP55D, SFP44G, SFP30M
## XML-SFP75D, SFP60G, SFP44M
## XML-SFP75G

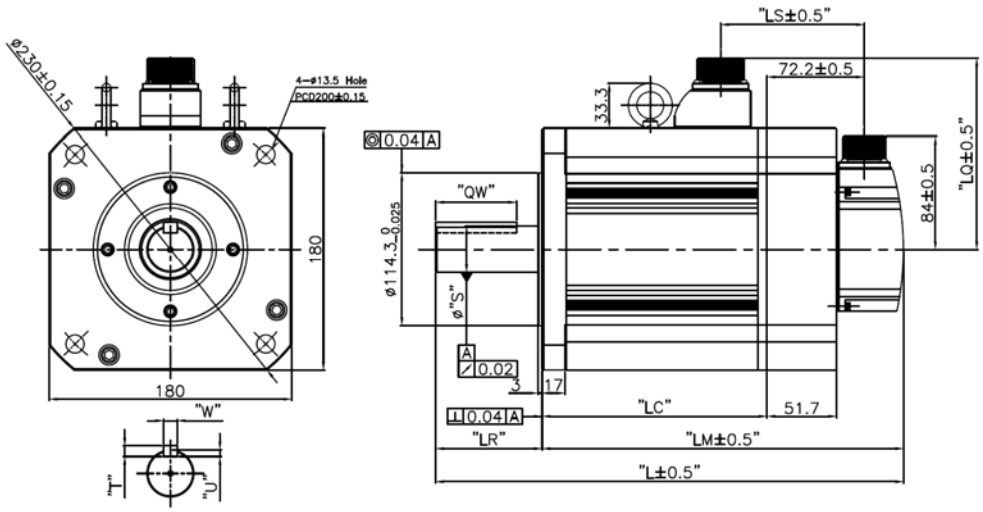


<Power Connector>



| Pin No. | Color | Phase |
|---|---|---|
| A | Red | U |
| B | White | V |
| C | Black | W |
| D | Green | FG |

Plug : MS3102A22-22P
MS3102A32-17P

<Brake Type Connector>



| Pin No. | Phase | Pin No. | Phase |
|---|---|---|---|
| A | U | D | F/G |
| B | V | E | BK+ |
| C | W | F | BK- |

Plug : MS3102A24-10P

<S-turn Encoder Connector>



| Pin No. | Phase | Pin No. | Phase |
|---|---|---|---|
| A | MA | M | - |
| B | MA | N | - |
| C | SL | P | - |
| D | SL | R | - |
| E | - | H | +5V |
| F | - | G | 0V |
| K | - | J | SHIELD |
| L | - | | |

Plug : MS3102A20-29P

<M-turn Encoder Connector>



| Pin No. | Phase | Pin No. | Phase |
|---|---|---|---|
| A | MA | M | - |
| B | MA | N | - |
| C | SL | P | - |
| D | SL | R | - |
| E | VOD_B | H | +5V |
| F | GND_B | G | 0V |
| K | - | J | SHIELD |
| L | - | | |

Plug : MS3102A20-29P

| Name | External Dimensions | | | | | | Shaft, Key Dimensions | | | | | Power Connector |
|---|---|---|---|---|---|---|---|---|---|---|---|---|
| | L | LM | LC | LR | LQ | LS | S | QK | T | W | U | |
| SFP30A, SFP22D, SFP20G, SFP12M | 261.5 (312.9) | 182.5 (233.9) | 133 (132.7) | 79 | 142 | 53.8 (106.5) | Φ35 [0~+0.01] | 60 | 8 | 10 | 5 | MS3102A 22-22P |
| SFP50A, SFP35D, SFP30G, SFP20M | 295.5 (346.9) | 216.5 (267.9) | 167 (166.7) | | | | | | | | | |
| SFP55D, SFP44G, SFP30M | 345.5 (396.9) | 266.5 (317.9) | 217 (216.7) | | | | | | | | | |
| SFP75D, SFP60G, SFP44M | 405.5 (456.9) | 326.5 (377.9) | 277 (276.7) | | | | | | | | | |
| SF75G | 457.5 | 344.5 | 295 | 113 | 152 | 60.2 | Φ42 [-0.016~0] | 96 | 8 | 12 | 5 | MS3102A 32-17P |

**Note 1)** SFP30M or higher-end models have eye bolts.
**Note 2)** Use DC power (24 V) to operate the brake.
**Note 3)** The sizes in parentheses apply when attached to the brakes.

## ■ SGP Series | XML-SGP22D, SGP20G, SGP12M
## XML-SGP35D, SGP30G, SGP20M
## XML-SGP55D, SGP44G, SGP30M
## XML-SGP75D, SGP60G, SGP44M
## XML-SGP110D, SGP85G, SGP60M

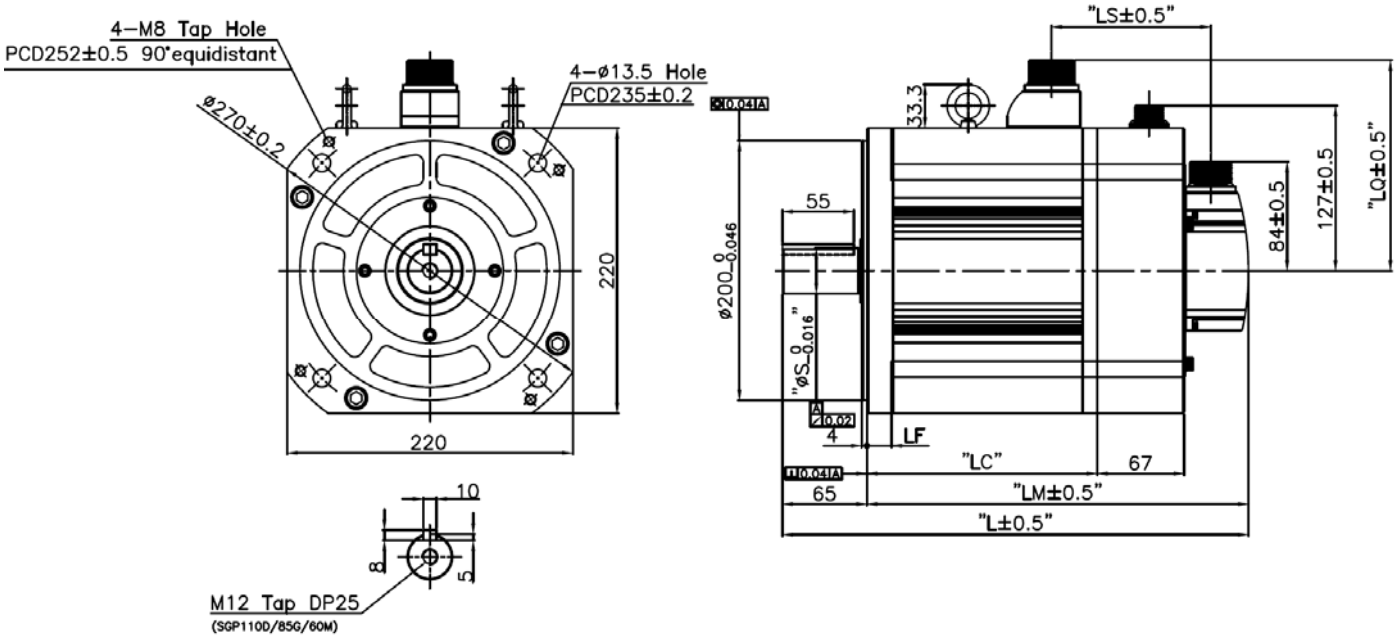


<Power Connector>




| Pin No. | Color | Phase |
|---|---|---|
| A | Red | U |
| B | White | V |
| C | Black | W |
| D | Green | FG |

Plug : MS3102A22-22P
MS3102A32-17P

<Brake Connector>

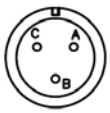


| Pin No. | Phase |
|---|---|
| A | BK+ |
| B | BK- |
| C | - |

Plug : MS3102A14S-7P

<S-turn Encoder Connector>



| Pin No. | Phase | Pin No. | Phase |
|---|---|---|---|
| A | MA | M | - |
| B | MA | N | - |
| C | SL | P | - |
| D | SL | R | - |
| E | - | H | +5V |
| F | - | G | 0V |
| K | - | J | SHIELD |
| L | - | | |

Plug : MS3102A20-29P

<M-turn Encoder Connector>



| Pin No. | Phase | Pin No. | Phase |
|---|---|---|---|
| A | MA | M | - |
| B | MA | N | - |
| C | SL | P | - |
| D | SL | R | - |
| E | VOD_B | H | +5V |
| F | GND_B | G | 0V |
| K | - | J | SHIELD |
| L | - | | |

Plug : MS3102A20-29P

| Name | External Dimensions | | | | | | | Power Connector |
|---|---|---|---|---|---|---|---|---|
| | L | LM | LC | LF | LQ | LS | S | |
| SGP22D, SGP20G, SGP12M | 236.5(302.7) | 171.5(237.7) | 122(121.2) | 19 | 162 | 56.4(122.6) | 35 | MS3102A 22-22P |
| SGP35D, SGP30G, SGP20M | 256.5(322.7) | 191.5(257.7) | 142(141.2) | | | | | |
| SGP55D, SGP44G, SGP30M | 292.5(358.7) | 227.5(293.7) | 178(177.2) | | | | | |
| SGP75D, SGP60G, SGP44M | 320.5(386.7) | 255.5(321.7) | 206(205.2) | | | | | |
| SGP110D, SGP85G, SGP60M | 418.5(484.7) | 353.5(419.7) | 304(303.2) | 21 | 172 | 66(132.2) | 45 | MS3102A 32-17P |

**Note 1)** Use DC power (90 V) to operate the brake.
**Note 2)** The sizes in parentheses apply when attached to the brakes.

## ■ SG Series | XML-SGP110G, SGP150G

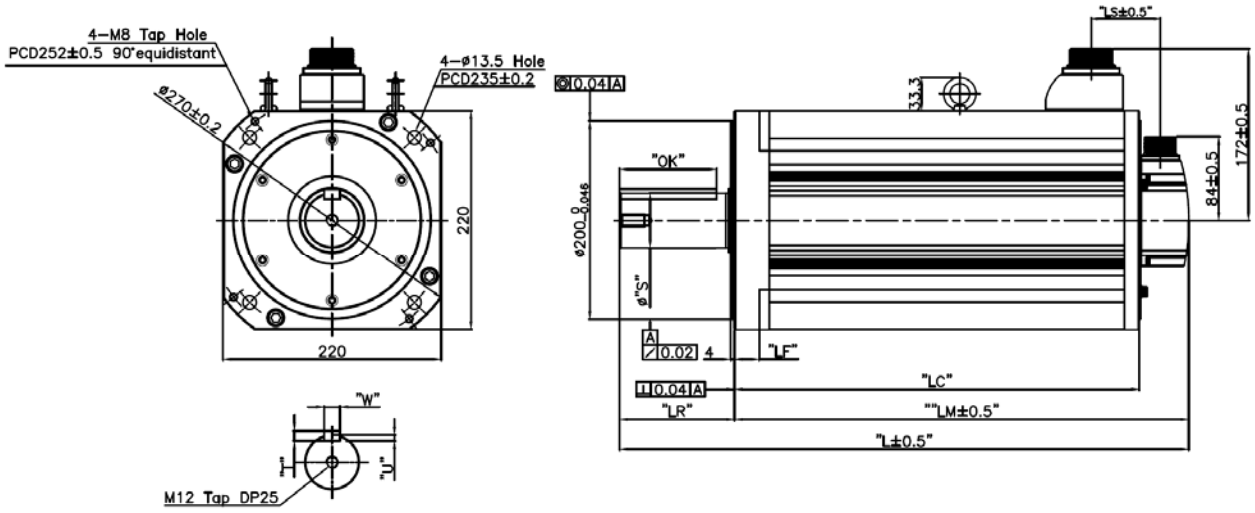


<Power Connector>



| Pin No. | Color | Phase |
|---|---|---|
| A | Red | U |
| B | White | V |
| C | Black | W |
| D | Green | FG |

Plug : MS3102A32-17P

<S-turn Encoder Connector>



| Pin No. | Phase | Pin No. | Phase |
|---|---|---|---|
| A | MA | M | - |
| B | $\overline{MA}$ | N | - |
| C | SL | P | - |
| D | $\overline{SL}$ | R | - |
| E | - | H | +5V |
| F | - | G | 0V |
| K | - | J | SHIELD |
| L | - | | |

Plug : MS3102A20-29P

<M-turn Encoder Connector>



| Pin No. | Phase | Pin No. | Phase |
|---|---|---|---|
| A | MA | M | - |
| B | $\overline{MA}$ | N | - |
| C | SL | P | - |
| D | $\overline{SL}$ | R | - |
| E | VOD_B | H | +5V |
| F | GND_B | G | 0V |
| K | - | J | SHIELD |
| L | - | | |

Plug : MS3102A20-29P

| Name | External Dimensions | | | | | | | Shaft, Key Dimensions | | | |
|---|---|---|---|---|---|---|---|---|---|---|---|
| | L | LM | LC | QK | LR | LF | LS | S | T | W | U |
| SG110G | 468.5 | 353.5 | 304 | 96 | 115 | 21 | 66 | 42 (-0.016~0) | 8 | 12 | 5 |
| SG150G | 574.5 | 458.5 | 409 | 98 | 116 | 25 | 70 | 55 (+0.011~+0.030) | 10 | 16 | 6 |

## ■ FEP Series | XML-FEP09A, FEP06D, FEP05G, FEP03M
## XML-FEP15A, FEP11D, FEP09G, FEP06M
## XML-FEP22A, FEP16D, FEP13G, FEP09M
## XML-FEP30A, FEP22D, FEP17G, FEP12M

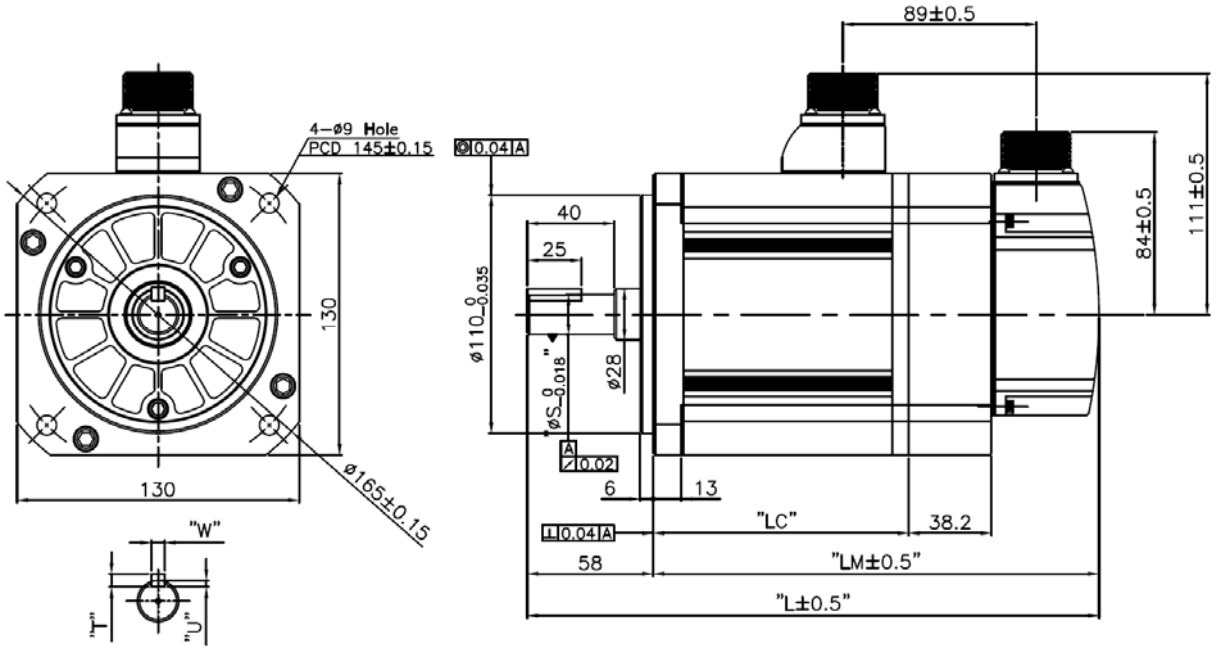


<Power Connector>




| Pin No. | Color | Phase |
|---|---|---|
| A | Red | U |
| B | White | V |
| C | Black | W |
| D | Green | FG |

Plug : MS3102A20-4P

<Brake Connector>




| Pin No. | Phase | Pin No. | Phase |
|---|---|---|---|
| A | U | D | F/G |
| B | V | E | BK+ |
| C | W | F | BK- |

Plug : MS3102A20-15P

<S-turn Encoder Connector>

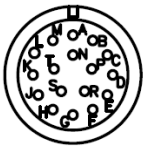

| Pin No. | Phase | Pin No. | Phase |
|---|---|---|---|
| A | MA | M | - |
| B | MA | N | - |
| C | SL | P | - |
| D | SL | R | - |
| E | - | H | +5V |
| F | - | G | 0V |
| K | - | J | SHIELD |
| L | - | | |

Plug : MS3102A20-29P

<M-turn Encoder Connector>

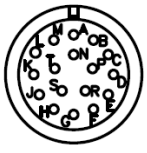

| Pin No. | Phase | Pin No. | Phase |
|---|---|---|---|
| A | MA | M | - |
| B | MA | N | - |
| C | SL | P | - |
| D | SL | R | - |
| E | VOD_B | H | +5V |
| F | GND_B | G | 0V |
| K | - | J | SHIELD |
| L | - | | |

Plug : MS3102A20-29P

| Model | External Dimensions | | | Shaft, Key Dimensions | | | |
|---|---|---|---|---|---|---|---|
| | L | LM | LC | S | T | W | U |
| FE09A,FE06D,FE05G,FE03M | 197.3(235.3) | 139.3(177.3) | 89.8(89.6) | 19 | 5 | 5 | 3 |
| FE15A,FE11D,FE09G,FE06M | 217.3(255.3) | 159.3(197.3) | 109.8(109.6) | 19 | 5 | 5 | 3 |
| FE22A,FE16D,FE13G,FE09M | 237.3(275.3) | 179.3(217.3) | 129.8(129.6) | 22 | 6 | 6 | 3.5 |
| FE30A,FE22D,FE17G,FE12M | 255.3(293.3) | 197.3(235.3) | 147.8(147.6) | 24 | 7 | 8 | 4 |

**Note 1)** Use DC power (24 V) to operate the brake.
**Note 2)** The sizes in parentheses apply when attached to the brakes.

## ■ FFP Series | XML-FFP30A, FFP22D, FFP20G, FFP12M
## XML-FFP50A, FFP35D, FFP30G, FFP20M
## XML-FFP55D, FFP44G, FFP30M
## XML-FFP75D, FFP60G, FFP44M
## XML-FFP75G

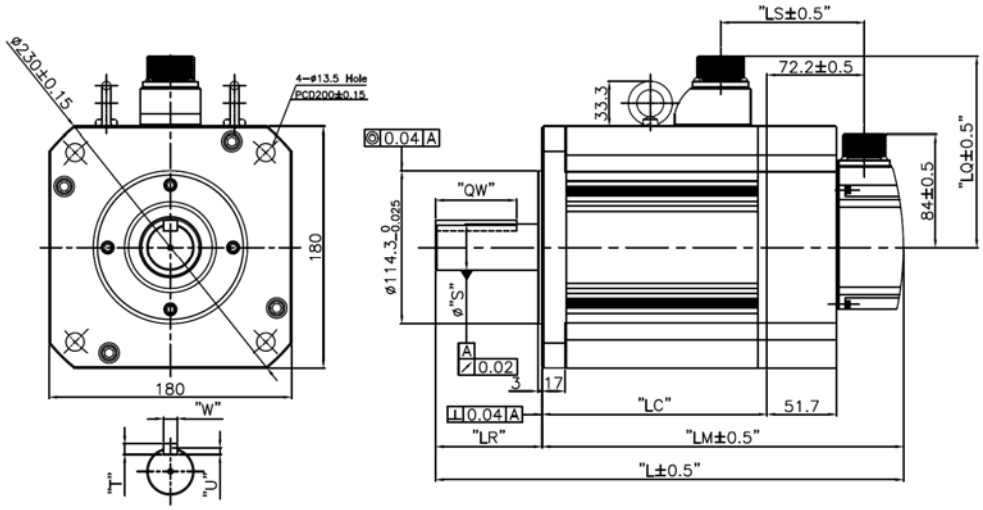


<Power Connector>



| Pin No. | Color | Phase |
|---|---|---|
| A | Red | U |
| B | White | V |
| C | Black | W |
| D | Green | FG |

Plug : MS3102A22-22P
MS3102A32-17P

<Brake Type Connector>



| Pin No. | Phase | Pin No. | Phase |
|---|---|---|---|
| A | U | D | F/G |
| B | V | E | BK+ |
| C | W | F | BK- |

Plug : MS3102A24-10P

<S-turn Encoder Connector>



| Pin No. | Phase | Pin No. | Phase |
|---|---|---|---|
| A | MA | M | - |
| B | MA | N | - |
| C | SL | P | - |
| D | SL | R | - |
| E | - | H | +5V |
| F | - | G | 0V |
| K | - | J | SHIELD |
| L | - | | |

Plug : MS3102A20-29P

<M-turn Encoder Connector>



| Pin No. | Phase | Pin No. | Phase |
|---|---|---|---|
| A | MA | M | - |
| B | MA | N | - |
| C | SL | P | - |
| D | SL | R | - |
| E | VOD_B | H | +5V |
| F | GND_B | G | 0V |
| K | - | J | SHIELD |
| L | - | | |

Plug : MS3102A20-29P

| Name | External Dimensions | | | | | | Shaft, Key Dimensions | | | | | Power Connector |
|---|---|---|---|---|---|---|---|---|---|---|---|---|
| | L | LM | LC | LR | LQ | LS | S | QK | T | W | U | |
| FFP30A,FFP22D, FFP20G,FFP12M | 257.5 (308.9) | 178.5 (229.9) | 129 (128.7) | 79 | 142 | 53.8 (106.5) | Φ35 [0~+0.01] | 60 | 8 | 10 | 5 | MS3102A 22-22P |
| FFP50A,FFP35D, FFP30G,FFP20M | 287.5 (338.9) | 208.5 (259.9) | 159 (158.7) | | | | | | | | | |
| FFP55D,FFP44G, FFP30M | 331.5 (382.9) | 252.5 (303.9) | 203 (202.7) | | | | | | | | | |
| FFP75D, FFP60G, FFP44M | 384.5 (435.9) | 305.5 (356.9) | 256 (255.7) | | | | Φ42 [-0.016~0] | | | 12 | | |
| FFP75G | 439.5 | 326.5 | 277 | 113 | 152 | 60.2 | | 96 | | | | MS3102A 32-17P |

**Note 1)** SFP30M or higher-end models have eye bolts.
**Note 2)** Use DC power (24 V) to operate the brake.
**Note 3)** The sizes in parentheses apply when attached to the brakes.

## ■ FGP Series | XML-FGP22D, FGP20G, FGP12M
## XML-FGP35D, FGP30G, FGP20M
## XML-FGP55D, FGP44G, FGP30M
## XML-FGP75D, FGP60G, FGP44M

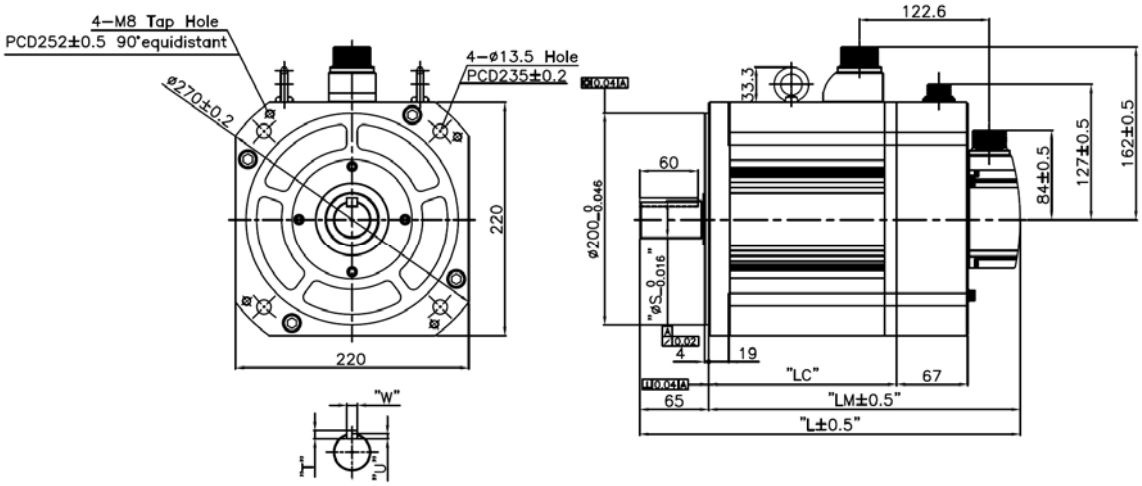


<Power Connector>




| Pin No. | Color | Phase |
|---|---|---|
| A | Red | U |
| B | White | V |
| C | Black | W |
| D | Green | FG |

Plug : MS3102A22-22P

<Brake Connector>

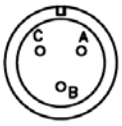


| Pin No. | Phase |
|---|---|
| A | BK+ |
| B | BK- |
| C | - |

Plug : MS3102A14S-7P



| Pin No. | Phase | Pin No. | Phase |
|---|---|---|---|
| A | MA | M | - |
| B | MA | N | - |
| C | SL | P | - |
| D | SL | R | - |
| E | - | H | +5V |
| F | - | G | 0V |
| K | - | J | SHIELD |
| L | - | | |

Plug : MS3102A20-29P



| Pin No. | Phase | Pin No. | Phase |
|---|---|---|---|
| A | MA | M | - |
| B | MA | N | - |
| C | SL | P | - |
| D | SL | R | - |
| E | VOD_B | H | +5V |
| F | GND_B | G | 0V |
| K | - | J | SHIELD |
| L | - | | |

Plug : MS3102A20-29P

| Name | External Dimensions | | | | | | |
|---|---|---|---|---|---|---|---|
| | L | LM | LC | S | T | W | U |
| FGP22D, FGP20G, FGP12M | 229.5(295.7) | 164.5(230.7) | 115(114.2) | 35 (0~+0.01) | 8 | 10 | 5 |
| FGP35D, FGP30G, FGP20M | 250.5(316.7) | 185.5(251.7) | 136(135.2) | | | | |
| FGP55D, FGP44G, FGP30M | 282.5(348.7) | 217.5(283.7) | 168(167.2) | | | | |
| FGP75D, FGP60G, FGP44M | 304.5(370.7) | 239.5(305.7) | 190(189.2) | 42 (-0.016~0) | 8 | 12 | 5 |

**Note 1)** Use DC power (90 V) to operate the brake.
**Note 2)** The sizes in parentheses apply when attached to the brakes.

# 7.2 Servo drive

## 7.2.1 Product Features

| Item \ Name | | | XDL-L7SB010 | XDL-L7SB020 | XDL-L7SB035 | XDL-L7SB050 | XDL-L7SB075 | XDL-L7SB150 |
|---|---|---|---|---|---|---|---|---|
| Input power | Main power | | 3-phase AC 380-480 V (-15-10%), 50-60 Hz | | | | | |
| | Control power | | Single-phase AC 380-480 V (-15-10%), 50-60 Hz | | | | | |
| Rated current (A) | | | 3.7 | 8 | 10.1 | 17.5 | 22.8 | 39 |
| Peak current (A) | | | 11.1 | 24 | 30.3 | 52.5 | 57 | 97.5 |
| Encoder Type | | | Quad. Type incremental line drive 2000-10000 [P/R]<br>Serial 17 / 19 bit / 21 bit | | | | | |
| Control performance | Speed Control | Speed control range | Maximum 1: 5000 | | | | | |
| | | Frequency response | Maximum 1 kHz or above (when the 19-bit serial encoder is applied). | | | | | |
| | | Speed command | DC –10 V-+10 V (Reverse rotation in case of negative voltage) | | | | | |
| | | Acceleration/deceleration time | Straight or S-curve acceleration/deceleration (0-10,000 ms, possible to be set by one ms unit) | | | | | |
| | | Speed variation | ±0.01% or lower (when the load changes between 0 and 100%)<br>±0.1% or less (temperature of 25℃ (±10)) | | | | | |
| | Position Control | Input frequency | 1 Mpps, line drive / 200 kbps, open collector | | | | | |
| | | Input pulse Method | Symbol + pulse series, CW+CCW, A/B phase | | | | | |
| | | Electric Gear Ratio | Four digital gear ratios can be set, selected and tuned. | | | | | |
| | Torque Control | Torque command | DC –10-+10 V (Reverse direction torque in case of negative voltage) | | | | | |
| | | Speed limit | DC 0-10 V, internal speed command within ±1% | | | | | |
| | | repetition accuracy | Within ±1% | | | | | |
| Input/output signal | Analog Input | Input range | DC 0-10 V | | | | | |
| | | Angular resolution | 12 bits* | | | | | |
| | Analog Output | Output range | DC 0-10 V | | | | | |
| | | Angular resolution | 12 bits | | | | | |

| Item \ Name | | XDL-L7SB010 | XDL-L7SB020 | XDL-L7SB035 | XDL-L7SB050 | XDL-L7SB075 | XDL-L7SB150 |
|---|---|---|---|---|---|---|---|
| | Digital input | A total of 10 input channels (allocable)<br>SVON, SPD1, SPD2, SPD3, ALMRST, DIR, CCWLIM, CWLIM, EMG, STOP, EGEAR1, EGEAR2, PCON, GAIN2, P_CLR, T_LMT, MODE, ABS_RQ, ZCLAMP<br>You can selectively allocate a total of 19 functions.<br>You can set the positive/negative logic of the selected signal. | | | | | |
| | Digital output | A total of 5 channels (allocable), 3 channels (fixed with alarm codes)<br>ALARM, READY, ZSPD, BRAKE, INPOS, TLMT, VLMT, INSPD, WARN<br>You can selectively allocate a total of 9 output types.<br>You can set the positive/negative logic of the selected signal. | | | | | |
| communication | RS422 | Accessible to PC software and the RS422 server | | | | | |
| | USB | Status monitoring through PC software, JOG operation, and parameter uploading/downloading are possible. | | | | | |
| Encoder | | Serial BiSS encoder and quadrature encoder supported | | | | | |
| Encoder output method | | Random pre-scale output through FPGA (maximum 6.4 Mpps) | | | | | |
| Built-in functions | Dynamic braking | Standard built-in (activated when the servo alarm goes off or when the servo is off) | | | | | |
| | Regenerative braking | Both the default built-in brake and an externally installed brake are possible. | | | | | |
| | Displaying | Seven segments (5 DIGIT) | | | | | |
| | Self-setting | Loader (SET, MODE, UP, and DOWN keys) | | | | | |
| | Add-on functions | Auto gain tuning, phase Z detection, manual JOG operation,<br>program JOG operation, automatic analog input calibration | | | | | |
| | Protection functions | Overcurrent, overload, overvoltage, low voltage, main power input error, control power input error, overspeed, motor cable, heating error (power module heating, drive temperature error), encoder error, excessive regeneration, sensor error, communication error | | | | | |
| Environment | Temperature | 0 ~ 50[℃] | | | | | |
| | Humidity | 90% RH or less (no condensation) | | | | | |
| | Environment | Indoors in an area free from corrosive or combustible gases, liquids, or dust. | | | | | |

# 7.2.2 Outline Diagram

## ■ XDL-L7□B010□

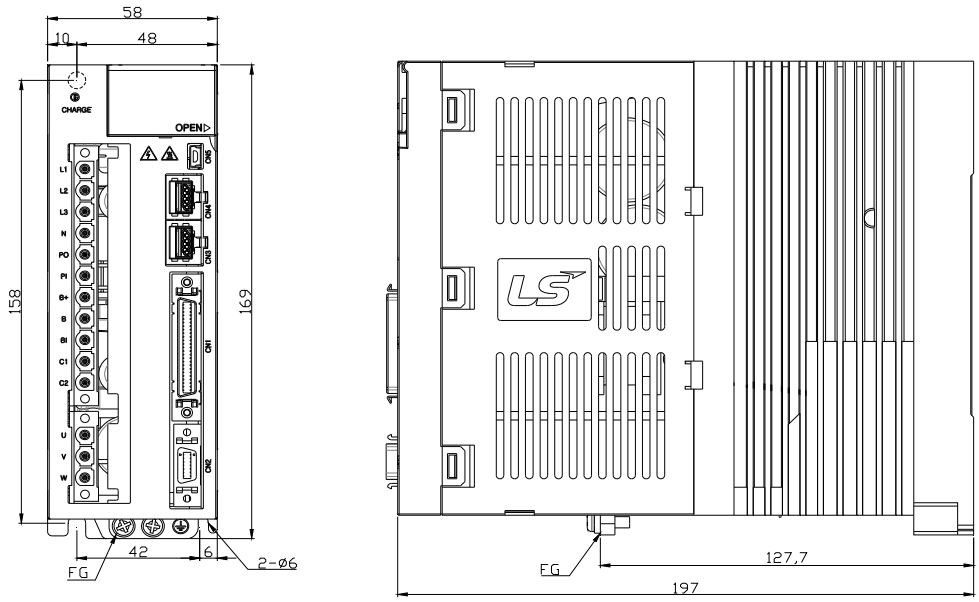


★ Weight: 1.5 kg (including the cooling fan)

## ■ XDL-L7□B020□ / XDL-L7□B035□

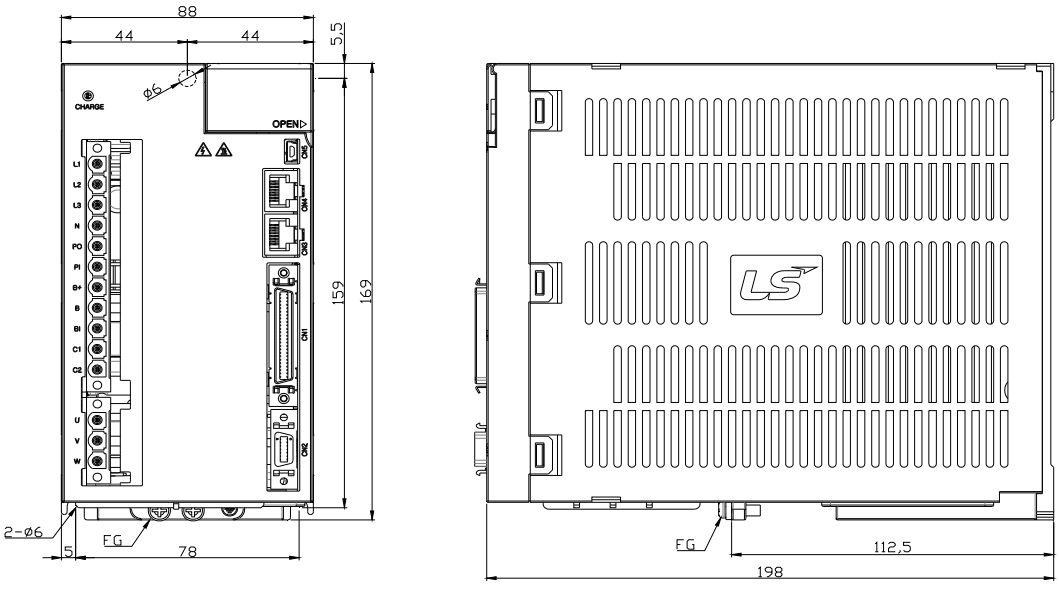


★ Weight: 2.5 kg (including the cooling fan)

## ■ XDL-L7□B050□

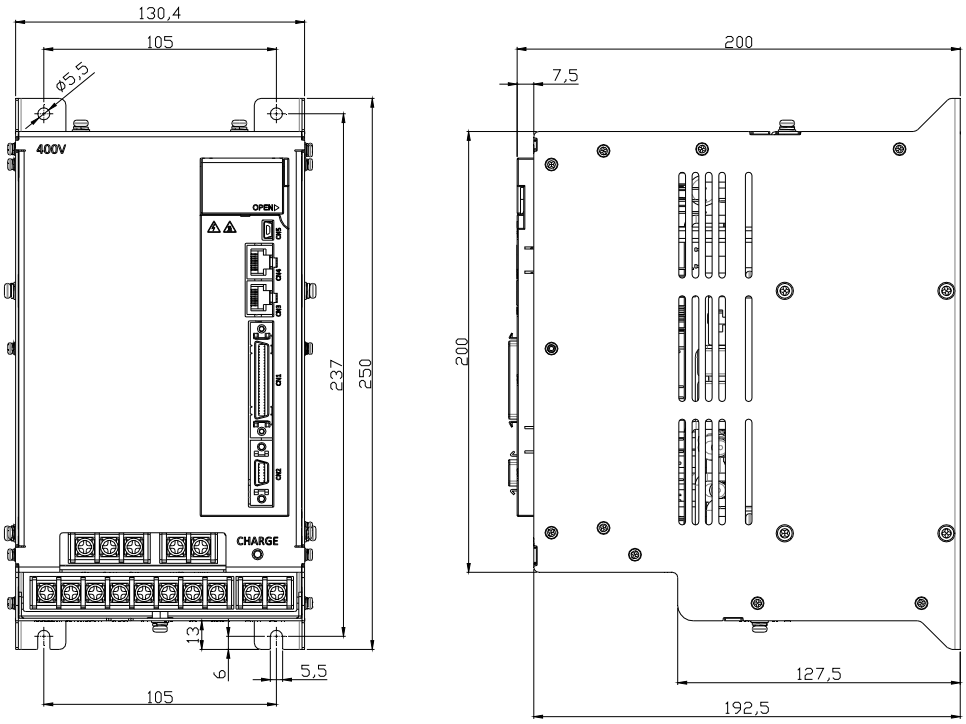


★ Weight: **5.5 kg (including the cooling fan)**

## ■ XDL-L7□B075□

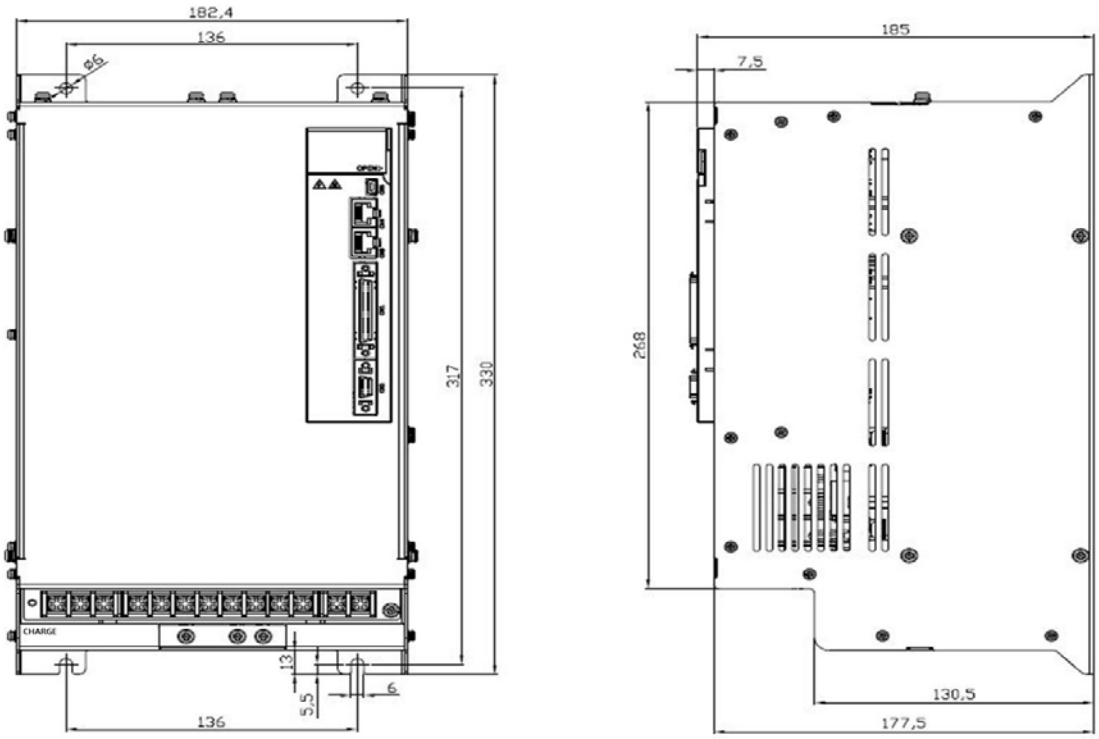


★ **Weight: 8.5 kg (including the cooling fan)**

## ■ XDL-L7□B150□

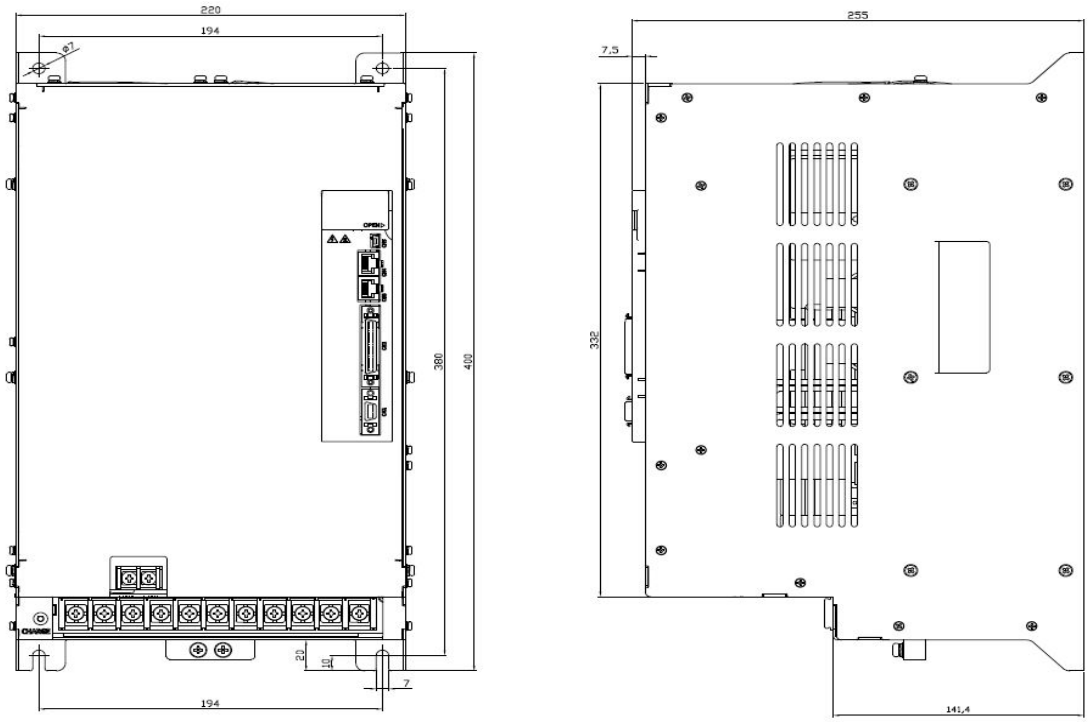


★ **Weight: 15.5 kg (including the cooling fan)**

# 7.3 Options and Peripheral Devices

■ **Option (Incremental/serial encoder cable)**

| Category | Product Name | Name (Note 1) | Applicable Motors | Specifications |
|---|---|---|---|---|
| For signaling | Medium capacity Serial type encoder cable (Single turn) | XLCS-E□□□DS | All models of FEP/ FFP/ FGP SERIES | Motor Side Connector / Drive Side Connection<br>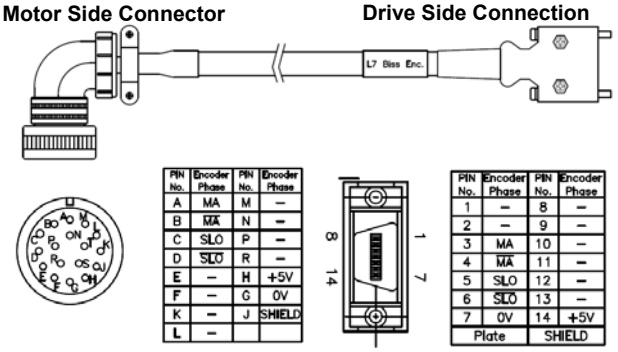<br>**1. Motor connection (MS: Military Standard)**<br>a. Plug specifications : MS3108A 20-29S<br>**2. Drive connection (CN2)**<br>a. Case : 10314-52A0-008 (3M) or SM-14J(Suntone)<br>b. Connector : 10114-3000VE(3M) or SM-14J(Suntone)<br>**3. Cable specifications : 3Px0.2SQ or 3PxAWG24** |
| For signaling | Medium capacity Serial type encoder cable (Multi turn) | XLCS-E□□□DS1 | All models of FEP/ FFP/ FGP SERIES | Motor Side Connector / Drive Side Connection<br>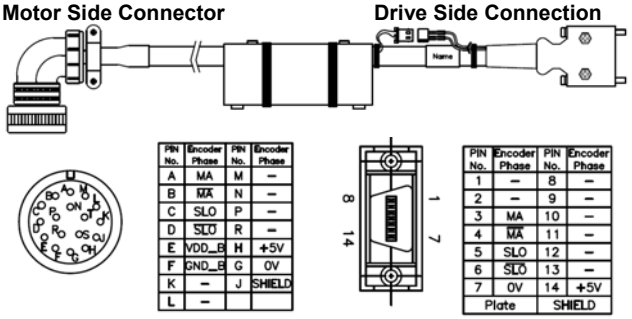<br>**1. Motor connection (MS: Military Standard)**<br>a. Plug specifications : MS3108A 20-29S<br>**2. Drive connection (CN2)**<br>a. Case : 10314-52A0-008 (3M) or SM-14J(Suntone)<br>b. Connector : 10114-3000VE(3M) or SM-14J(Suntone)<br>**3. Cable specifications : 4Px0.2SQ or 4Px AWG24**<br>**4. Battery connection.**<br>a. Connector specifications : 5267-02A(Molex)<br>b. Battery specification : ER6V<br>(TOSHIBA, AA, 3.6V, 2000mAh) |

**Note 3)** The □□□ in the name indicates the type and length of each cable. Refer to the following table for this information.

| Cable length (m) | 3 | 5 | 10 | 20 |
|---|---|---|---|---|
| Robot cable | F03 | F05 | F10 | F20 |
| Regular cable | N03 | N05 | N10 | N20 |

■ **Optional power cable**

| Category | Product Name | Name (Note 1) | Applicable Motors | Specifications |
|---|---|---|---|---|
| For power | Middle capacity MS Type Power cable (For 400V 130 Flange) | XLCS-P□□□HS | All models of SEP/ FEP SERIES | **Motor Side Connector** **Drive Side Connection**<br>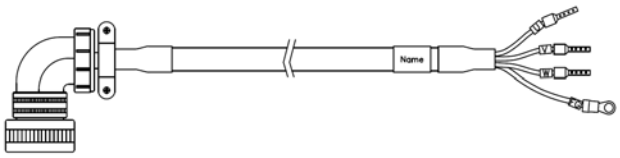<br><br>Phase / PIN No.: LEAD WIRE U A; V B; W C; FG FG D<br>**1. Motor connection (MS: Military Standard)**<br>a. Plug specifications : MS3108A 20-4S<br>**2. Drive connection (U,V, W, FG)**<br>a. U, V, W Ferrule specifications : 1512<br>b. FG PIN specifications: 1.5X4(Ring Terminal)<br>**3. Power Cable specifications**<br>a. 4Cx1.5SQ or 4Cx15AWG |
| For power (Brake Type) | Middle capacity MS Type Power/ Brake cable (For 400V 130 Flange) | APCF-P□□□NB | All models of SEP/ FEP SERIES All model | **Motor Side Connector** **Drive Side Connection**<br>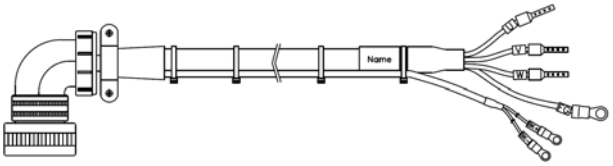<br>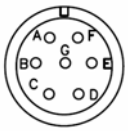<br>Phase / PIN No.: LEAD WIRE U A; V B; W C; FG FG D; Brake WIRE + E; – F<br>**1. Motor connection (MS: Military Standard)**<br>a. Plug specifications : MS3108A 20-15S(MS)<br>**2. Drive connection (U,V, W, FG)**<br>a. U, V, W Ferrule specifications : 1512<br>b. FG PIN specification : 1.5X4(Ring Terminal)<br>**3. Power Cable specifications**<br>a. 4Cx1.5SQ or 4Cx15AWG<br>**4. Brake power connection**<br>a. Connection pin specification : 1.5 x 3(Ring Terminal)<br>**5. Brake power cable specification**<br>a. 2Cx0.75SQ or 2Cx19AWG |

**Note 4)** The □□□ in the name indicates the type and length of each cable. Refer to the following table for this information.

| Cable length (m) | 3 | 5 | 10 | 20 |
|---|---|---|---|---|
| Robot cable | F03 | F05 | F10 | F20 |

| Category | Product Name | Name (Note 1) | Applicable Motors | Specifications |
|---|---|---|---|---|
| For power | Middle capacity MS Type Power cable (400V 3.5kW Drive under 180/220 Flange) | XLCS-P□□□IS | SFP30A<br>SFP22D<br>SFP35D<br>SFP20G<br>SFP12M<br>SFP20M<br>SGP22D<br>SGP35D<br>SGP20G<br>SGP12M<br>SGP20M<br>FFP30A<br>FFP22D<br>FFP35D<br>FFP20G<br>FFP30G<br>FFP12M<br>FFP20M<br>FGP22D<br>FGP35D<br>FGP20G<br>FGP30G<br>FGP12M<br>FGP20M | **Motor Side Connector** **Drive Side Connection**<br>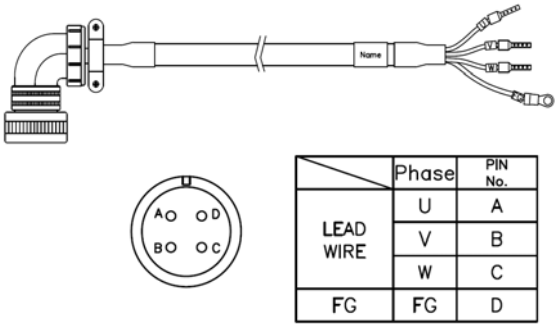<br>**1. Motor connection (MS: Military Standard)**<br>a. Plug specifications: MS3108A 22-22S<br>**2. Drive connection (U,V, W, FG)**<br>a. U, V, W Ferrule specifications : 1512<br>b. FG PIN specifications : 1.5X4(Ring Terminal)<br>**3. Power Cable specifications : 4Cx1.5SQ or 4Cx15AWG** |
| For power (Brake Type) | Middle capacity MS Type Power/ Brake cable (400V 3.5kW Drive under 180 Flange) | XLCS-P□□□PB | SFP30A<br>SFP22D<br>SFP35D<br>SFP20G<br>SFP12M<br>SFP20M<br>FFP30A<br>FFP22D<br>FFP35D<br>FFP20G<br>FFP30G<br>FFP12M<br>FFP20M | **Motor Side Connector** **Drive Side Connection**<br>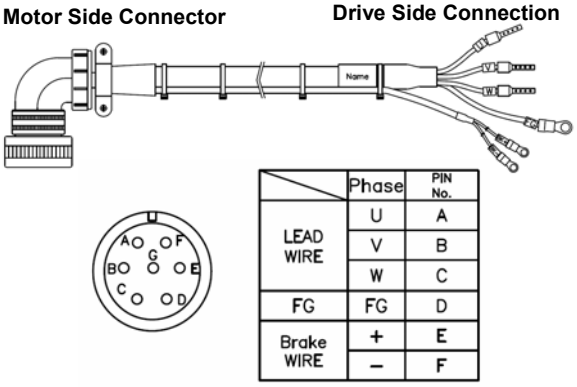<br>**1. Motor connection (MS: Military Standard)**<br>a. Plug specifications : MS3108A 24-10S(MS)<br>**2. Drive connection (U,V, W, FG)**<br>a. U, V, W Ferrule specifications : 1512<br>b. FG PIN specification : 1.5X4(Ring Terminal)<br>**3. Power Cable specifications: 4Cx1.5SQ or 4Cx15AWG**<br>**4. Brake power connection**<br>a. Connection pin specification : 1.5 x 3(Ring Terminal)<br>**5. Brake power cable specification**<br>a. 2Cx0.75SQ or 2Cx19AWG |

**Note 5)** The □□□ in the name indicates the type and length of each cable. Refer to the following table for this information.

| Cable length (m) | 3 | 5 | 10 | 20 |
|---|---|---|---|---|
| Robot cable | F03 | F05 | F10 | F20 |

<table>
<tr><th>Category</th><th>Product Name</th><th>Name (Note 1)</th><th>Applicable Motors</th><th>Specifications</th></tr>
<tr><td>For power</td><td>Middle capacity<br>MS Type Power cable<br>(400V 7.5kW Drive under 180/220 Flange)</td><td>XLCS-P□□□JS</td><td>SFP50A, SFP55D, SFP75D, SFP30G SFP44G, SFP60G, SFP30M, SFP44M<br>SGP55D, SGP75D, SGP30G, SGP44G, SGP60G, SGP30M, SGP44M<br>FFP50A, FFP55D, FFP75D, FFP44G, FFP60G, FFP30M, FFP44M<br>FGP55D, FGP75D, FGP44G, FGP60G, FGP30M, FGP44M</td><td>Motor Side Connector Drive Side Connection<br>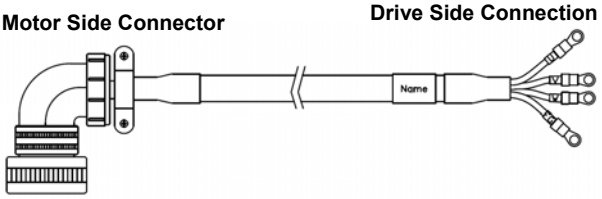<br><br><table><tr><td></td><td>Phase</td><td>PIN No.</td></tr><tr><td rowspan="3">LEAD WIRE</td><td>U</td><td>A</td></tr><tr><td>V</td><td>B</td></tr><tr><td>W</td><td>C</td></tr><tr><td>FG</td><td>FG</td><td>D</td></tr></table>1. Motor connection (MS: Military Standard)<br>a. Plug specifications: MS3108A 22-22S<br>2. Drive connection (U,V, W, FG)<br>a. U, V, W, FG Pin specifications : 4.0x5(Ring Termianl)<br>3. Cable specifications : 4Cx4.0SQ or 4Cx11AWG</td></tr>
<tr><td>For power (Brake Type)</td><td>Middle capacity<br>MS Type Power/ Brake cable<br>(400V 7.5kW Drive under 180Flange)</td><td>XLCS-P□□□LB</td><td>SFP50A, SFP55D, SFP75D, SFP44G, SFP60G, SFP30M, SFP44M<br>FFP50A, FFP55D, FFP75D, FFP44G, FFP60G, FFP75G FFP30M, FFP44M</td><td>Motor Side Connector Drive Side Connector<br>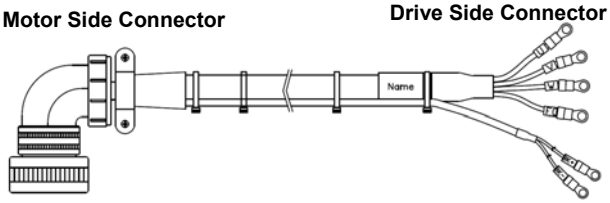<br>1. Motor connection (MS: Military Standard)<br>a. Plug specifications : MS3108A 24-10S(MS)<br>2. Drive connection (U,V, W, FG)<br>a. U, V, W, FG Pin specifications : 4.0x5(Ring Termianl)<br>3. Power Cable specifications: 4Cx4.0SQ or 4Cx11AWG<br>4. Brake power connection<br>a. Connection pin specification : 1.5 x 3(Ring Terminal)<br>5. Brake power cable specification<br>a. 2Cx0.75SQ or 2Cx19AWG</td></tr>
</table>

**Note 6)** The □□□ in the name indicates the type and length of each cable. Refer to the following table for this information.

| Cable length (m) | 3 | 5 | 10 | 20 |
|---|---|---|---|---|
| Robot cable | F03 | F05 | F10 | F20 |

<table>
<tr><th>Category</th><th>Product Name</th><th>Name (Note 1)</th><th>Applicable Motors</th><th>Specifications</th></tr>
<tr><td>For power</td><td>Middle Capacity MS Type Power Cable (400V 15kW Drive under 180/220 Flange)</td><td>XLCS-P□□□MS</td><td>SFP75G, SGP110D, SGP85G, SGP110G, SGP150G, SGP60M</td><td>Motor Side Connector Drive Side Connection<br>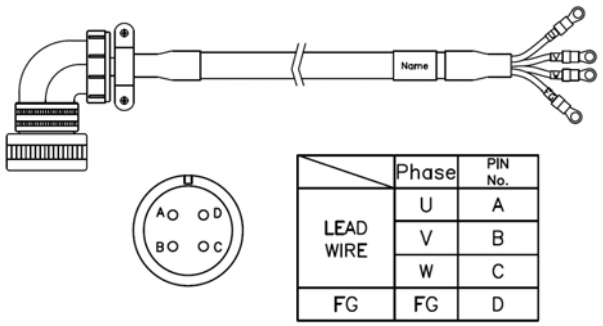

<table>
<tr><th></th><th>Phase</th><th>PIN No.</th></tr>
<tr><td rowspan="3">LEAD WIRE</td><td>U</td><td>A</td></tr>
<tr><td>V</td><td>B</td></tr>
<tr><td>W</td><td>C</td></tr>
<tr><td>FG</td><td>FG</td><td>D</td></tr>
</table>
1. Motor connection (MS: Military Standard)<br>a. Plug specifications: MS3108A 32-17S<br>2. Drive connection (U,V, W, FG)<br>a. U, V, W, FG Pin specifications : 10x5(Ring Termianl)<br>3. Cable specifications : 4Cx10.0SQ or 4Cx7AWG</td></tr>
<tr><td>For brake</td><td>Middle Capacity MS Type Brake Cable (200V/400V 220 Flange)</td><td>XLCS-P□□□MS</td><td>SGP22D<br>SGP35D<br>SGP55D<br>SGP75D<br>SGP12M<br>SGP20M<br>SGP30M<br>SGP44M<br>SGP20G<br>SGP30G<br>SGP44G<br>SGP60G<br>FGP22D<br>FGP35D<br>FGP55D<br>FGP75D<br>FGP20G<br>FGP30G<br>FGP30G<br>FGP44G<br>FGP60G<br>FGP12M<br>FGP20M<br>FGP30M<br>FGP44M</td><td>Motor Side Connector<br>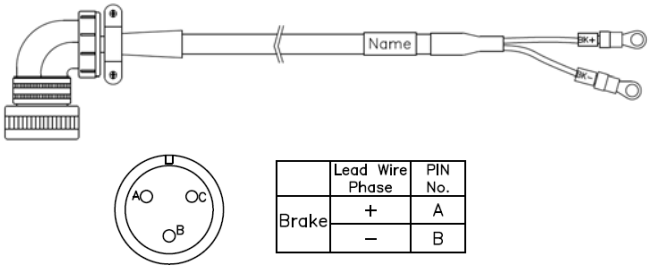

<table>
<tr><th></th><th>Lead Wire Phase</th><th>PIN No.</th></tr>
<tr><td rowspan="2">Brake</td><td>+</td><td>A</td></tr>
<tr><td>–</td><td>B</td></tr>
</table>
1. Motor connection (MS: Military Standard)<br>a. Plug specifications: MS3108A 14-7S<br>2. Brake power connection : 1.5x3(Ring Terminal)<br>3. Brake power cable specification<br>a. 2Cx0.75SQ or 2Cx19AWG</td></tr>
</table>

**Note 7)** The □□□ in the name indicates the type and length of each cable. Refer to the following table for this information.

| Cable length (m) | 3 | 5 | 10 | 20 |
|---|---|---|---|---|
| Robot cable | F03 | F05 | F10 | F20 |

■ **Optional cables**

| Category | Product Name | Name (Note 1) | Applicable Drive | Specifications |
|---|---|---|---|---|
| For signaling | CN1 Cable | XLC-CN1□A | XDL-L7 SERIES | [Upper level controller] Pin number display [Drive connection CN1] 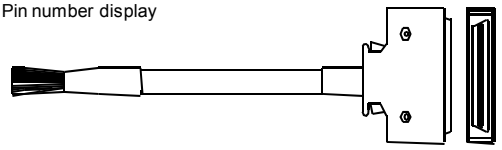 **1.** Drive connection (CN1) **a.** Case specifications: 10350-52A0-008 (3M) **b.** Connector specifications: 10150-3000VE (3M) **c.** Cable specifications: ROW-SB0.1Cx50C (AWG 28) |
| For signaling | Communication cable | XLCS-CM5L7U | XDL-L7 SERIES | [PC - USB port] [Servo drive – CN5] 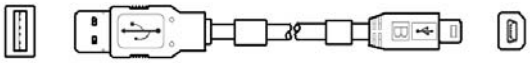 **1.** PC connection: USB A plug **2.** Drive connection (CN5): Mini USB 5P plug **3.** Electrical requirements: Double shielded, twisted pair, EMI filter installation (similar product: KU-AMB518 by SANWA) |

**Note 1)** The □ in Type Name indicates the length of each cable. Refer to the table below for how to display them.

| Cable length (m) | 1 | 2 | 3 | 5 |
|---|---|---|---|---|
| Written as | 01 | 02 | 03 | 05 |

■ **Option (connector)**

| - | Product Name | Name | Applicable Drive | Specifications |
|---|---|---|---|---|
| T/B | CN1<br>T/B | XLC-VSCN1T<br>XLC-VPCN1T | XDL-L7<br>SERIES | 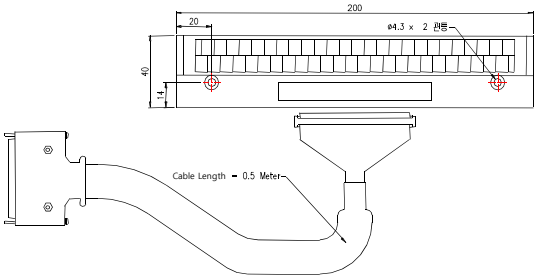<br>**1.** APC-VSCN1T: CN1 T/B expansion of APD-VS<br>**2.** APC-VPCN1T: CN1 T/B expansion of APD-VP<br>**3.** The cable length can be changed.<br>**4.** Standard cable length: 0.5 m |
| CN | CN1<br>Connector | XLC-CN1NNA | XDL-L7<br>SERIES | 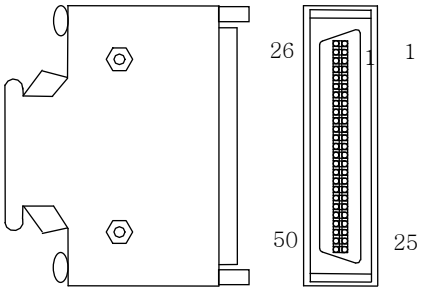<br>**1.** Case specifications: 10350-52A0-008 (3M)<br>**2.** Connector specifications: 10150-3000VE (3M) |
| CN | CN2<br>Connector | XLC-CN3NNA | XDL-L7<br>SERIES | 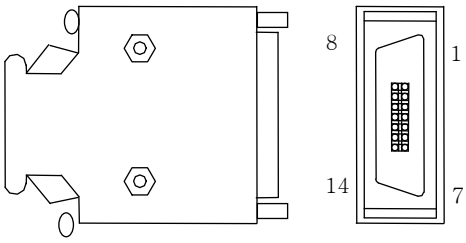<br>**1.** Case specifications: 10314-52A0-008 (3M)<br>**2.** Connector specifications: 10114-3000VE (3M) |

■ **Optional braking resistance**

| Category | Product Name | Name | Applicable Drive | Specifications |
|---|---|---|---|---|
| Resistance | Braking resistance | IRV300-82Ω<br>82[Ω<br>(300W) | XDL-L7□B010□ | 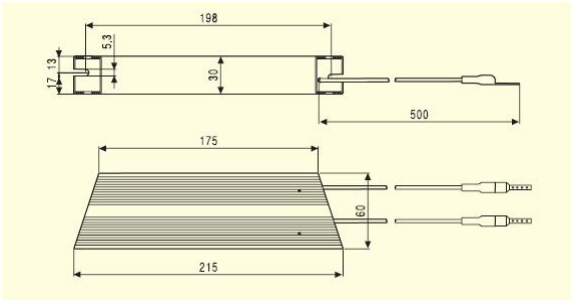 |
| Resistance | Braking resistance | IRV600-140Ω<br>140Ω<br>(600W)<br>- Making under review | XDL-L7□B035□ | 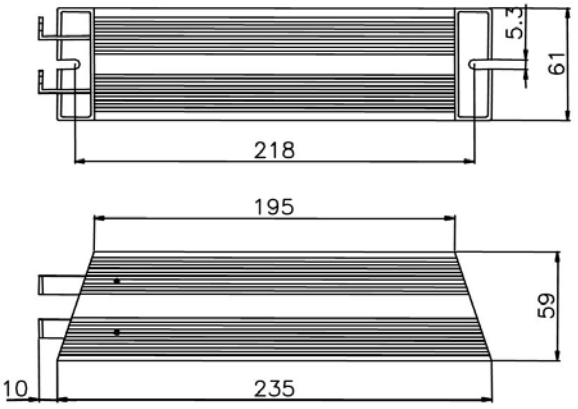 |
| Resistance | Braking resistance | IRV600-75Ω<br>25[Ω<br>(600W *3P) | XDL-L7□B050□<br>XDL-L7□B075□<br>(3P) | 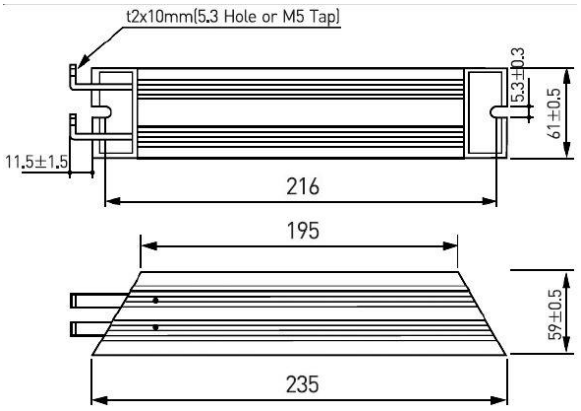 |
| Resistance | Braking resistance | IRM2000-13.4Ω<br>13.4[Ω<br>(2000W) | XDL-L7□B150□ | 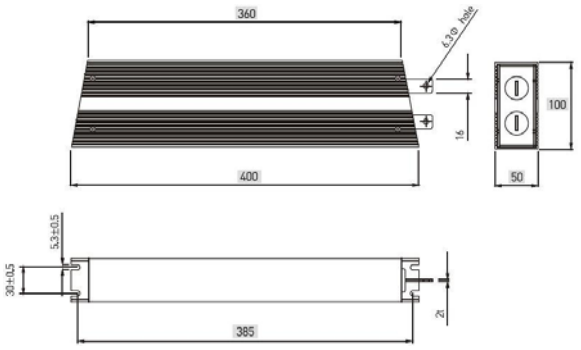 |

# 8. Maintenance and Inspection

## 8.1 Maintenance and Inspection

This chapter explains how to perform basic maintenance and inspection tasks as well as diagnose and troubleshoot the servo motor and drive.

### 8.1.1 Precautions

1. Measuring the motor voltage: The PWM controls the voltage output from the servo amp to the motor. Because of this, the waves take the form of pulses. Use a rectifier voltmeter for accurate measurements because different meters may produce different results.
2. Measuring the motor current: Use a moving iron ammeter and wait for the motor's reactance to smooth the pulse waveform into sine waves.
3. Measuring the electric power: Use an electrodynamometer based on the 3 power meter method.
4. Other gauges: When using an oscilloscope or digital voltmeter, do not allow them to touch the ground. Use a 1 mA or less input current gauge.

### 8.1.2 What to Inspect

Be sure to start inspection approximately 10 minutes after power is turned off because the charged voltage left in the internal smoothing condenser may cause an accident.

#### (1) Inspecting the Servo Motor

| ⚠ Caution |
|---|
| Be sure to start inspection approximately 10 minutes after power is turned off because the charged voltage left in the internal smoothing condenser may cause an accident. |

| Inspection Item | Inspection Period | Inspection and Handling | Notes |
|---|---|---|---|
| Vibration and sound check | Monthly | Touch the motor and listen for sounds. | The feel and sounds should be the same as usual. |
| Inspect the exterior of the motor | Depends on the amount of contamination or damage. | Clean the motor with a cloth or air pressure. | - |
| Measure the insulation resistance | At least once a year | Disconnect the motor from the drive and measure the insulation resistance.<br>A normal resistance level is 10 MΩ or higher. Note 1) | Contact our service center if the resistance is lower than 10 MΩ. |
| Replace the oil seal | At least once every 5,000 hours | Remove the oil seal from the motor and replace it. | This only applies to motors with an oil seal. |
| General inspection | At least once every 20,000 hours or after 5 years. | Contact our service center. | Do not disassemble the servo motor yourself. |

**Note 1)** Measure the resistance between the FG and one of the U, V, and W power lines on the servo motor.

## (2) Inspecting the Servo Drive

| Inspection Item | Inspection Period | Inspection process | What to do if you find an abnormality |
|---|---|---|---|
| Clean the main body and control board | At least once a year | Check if there is any dust or oil on the components. | Clean it with air pressure or a cloth. |
| Check for loose screws | At least once a year | Check whether the screws are loose on the terminals and connectors. | Tighten the screws. |
| Check for defective parts on the main body or the control board | At least once a year | Check for discoloration, damage, or disconnection caused by heat. | Contact our company. |

## 8.1.3 Replacing Parts

Mechanical friction and aging may deteriorate the following parts or even cause them to malfunction. This makes it important to conduct regular maintenance checks and replace worn parts.

1. The smoothing condenser: Ripple currents and other factors can cause this part to wear. The lifespan of this part depends on the operating temperature and environment. It normally lasts for 10 years if used continuously in a normal air-conditioned environment. Inspect the condenser at least once each year because it can rapidly age over a short period of time once it starts to deteriorate (inspect it more frequently as it approaches obsolescence).

   ※ Visual inspection criteria:

   **a.** The condition of the case: Check for deformations on the sides and bottom.

   **b.** The condition of the lid: Check for notable expansion, severe cracks, or broken parts.

   **c.** The relief valve: Check for notable valve expansion and operation.

   **d.** Also regularly check whether the exterior is cracked, discolored, or leaking and whether there are any broken parts. The condenser is obsolete when its capacity degrades to less than 85% of the rated capacity.

2. The relays: Check for bad connections and wear and tear on the contacts caused by switching currents. A relay is obsolete when its accumulated number of switches reaches 100,000, depending on the power capacity.

3. Motor bearings: Replace the bearings after 20,000 to 30,000 hours of operation at the rated speed under the rated load. Replace the bearings if abnormal sounds or vibrations are detected during inspection, depending on the operating conditions.

**The Standard Part Replacement Cycle**

| Part Name | Standard Replacement Cycle | Method |
|---|---|---|
| Smoothing condenser | 7-8 years | Replace (determine after inspection). |
| Relays | - | Determine after inspection |
| Fuses | 10 years | Replace |
| Aluminum electrolytic condensers on printed boards | 5 years | Replace with new boards (determined after inspection) |
| Cooling fans | 4-5 years | Replace |
| Motor bearings | - | Determine after inspection |
| Motor oil seals | 5,000 hours | Replace |

# 8.2 Diagnosing and Troubleshooting Abnormalities

AL-□ appears if a problem occurs during operation. If this happens, try to solve the problem by following the troubleshooting advice given in this section. If the problem persists, contact our service center.

## 8.2.1 Servo motor

**Cause of abnormalities, inspection procedure, and troubleshooting methods**

| Symptoms | Cause | Inspection process | Remedies |
|---|---|---|---|
| The motor does not move. | The input of CCWLIM and CWLIM is off. | Refer to "1.2 System Configuration." | Turn on the input of CCWLIM and CWLIM. |
| | The parameters are set incorrectly | Check the parameters of the motor, encoder, and encoder type control mode. | Reset the parameters. (Refer to “Chapter 4 Parameters.”) |
| | The motor has defects. | Use a resistance tester to measure the resistance to the motor lead terminal (resistance between phases: several ohms). | Replace the motor. |
| | The locking screws are loose. | Check the locking screws. | Tighten any loose screws. |
| | The external wiring is incorrect or the cables are disconnected. | Check the wires to the motor and the encoder. | Redo the wiring.<br>Replace the cables. |
| | The encoder has defects. | Check the output waves. | Replace the encoder.<br>(Contact our service center.) |
| Motor rotation is unstable. | The connection is bad. | Check the connection of the motor lead terminal. | Fix any bad connections. |
| | The input voltage is low. | Check the input voltage of the drive. | Change the power source. |
| | Overloads occur. | Check the condition of the machine. | Remove any foreign substances from the rotating unit and grease or lubricate it. |
| The motor overheats. | The ambient temperature is too high. | Check the temperature around the motor. (40℃ or lower) | Change heat transfer structure.<br>Install a cooling fan. |
| | The surface of the motor is contaminated. | Check whether there are any foreign substances on the surface of the motor. | Clean the surface of the motor. |
| | Overloads occur. | Check the load on the drive.<br>Check the acceleration/deceleration time. | Reduce the load.<br>Increase the acceleration/deceleration time.<br>Use a motor with a greater capacity. |
| | The magnetic power of the magnets is reduced. | Check the counter voltage and voltage waveforms. | Replace the motor. |
| The device is making a strange sound. | Coupling is bad. | Tighten the coupling screws and measure the concentricity of the connection. | Readjust the coupling. |
| | The bearings are abnormal. | Check the bearings for vibrations and sounds. | Contact us. |
| | The parameters are set incorrectly<br>(the inertia, gain, and time constants). | Check the parameters. | Refer to “Chapter 4 Parameters.” |

## 8.2.2 Servo Drive

If an alarm triggers, the malfunction signal output contact point (ALARM) turns off and the dynamic brake stops the motor.

| Alarm code | name | Details | What to check |
|---|---|---|---|
| AL-10 | IPM Fault | Overcurrent (H/W) | Check for incorrect wiring in the drive output and encoder.<br>Check the motor ID, drive ID, and encoder settings.<br>Determine whether there is a conflict or binding in the equipment. |
| AL-11 | IPM temperature | IPM overheat | Check for incorrect wiring in the drive output and encoder.<br>Check the motor ID, drive ID, and encoder settings.<br>Determine whether there is a conflict or binding in the equipment. |
| AL-14 | Over current | Overcurrent (S/W) | Check for incorrect wiring in the drive output and encoder.<br>Check the motor ID, drive ID, and encoder settings.<br>Determine whether there is a conflict or binding in the equipment. |
| AL-15 | Current offset | Abnormal current offset | Replace the drive if [St-23] and [St-24] are 10% or higher of the rated current. |
| AL-16 | Overcurrent (/CL) | Overcurrent (H/W) | Check for incorrect wiring in the drive output and encoder.<br>Check the motor ID, drive ID, and encoder settings.<br>Determine whether there is a conflict or binding in the equipment. |
| AL-21 | Continuous overload | Continuous overload | Determine whether there is a conflict or binding in the equipment.<br>Check the load and the condition of the brake.<br>Check for incorrect wiring in the drive output and encoder.<br>Check the motor ID, drive ID, and encoder settings. |
| AL-22 | Room temperature | Drive overheat | Check the temperature inside the drive [St-19].<br>the cooling fan installation, and the load condition. |
| AL-23 | Regen. Overload | Regenerative overload | Check the input voltage, regenerative braking resistance, and wiring.<br>Replace the drive. |
| AL-24 | Motor cable open | Motor disconnection | Check the wiring of the motor. |
| AL-30 | Encoder comm. | Serial encoder communication error | Check for incorrect wiring of the serial encoder. |
| AL-31 | Encoder cable open | Encoder cable disconnection | Check whether the encoder cable is disconnected. |

| Alarm code | name | Details | What to check |
|---|---|---|---|
| AL-32 | Encoder data error | Encoder data error | Check the [P0-02] setting and encoder wiring. |
| AL-33 | Motor setting error | Motor ID setting error | Check the [P0-00] setting. |
| AL-34 | Encoder Z PHASE Open | Encoder Z phase disconnected | Check whether the encoder cable is disconnected. |
| AL-40 | Under voltage | Low voltage | Check input voltage and power unit wiring. |
| AL-41 | Overvoltage | Overvoltage | Check the input voltage and wiring. Check the braking resistance for damage.<br>Check for excessive regenerative operation. Check the regenerative resistance. |
| AL-42 | RST power fail | Main power failure | Check the power unit wiring and power supply. |
| AL-43 | Control power fail | Control power failure | Check the power unit wiring and power supply. |
| AL-50 | Over speed limit | Overspeed | Check the encoder, encoder settings, encoder wiring, gain settings, motor wiring, motor ID, electric gear ratio, and speed command scale. |
| AL-51 | Position following | Excessive positional error | Check the excessive position command pulse setting [P4-11], wiring, limit contact point, gain setting, encoder setting, and electric gear ratio.<br>Check the load on the equipment and whether there is binding on the equipment. |
| AL-53 | Over pulse CMD | Pulse command frequency error | Check the pulse command frequency on the upper level controller.<br>Check the command pulse type. |
| AL-54 | Speed deviation | Excessive speed error | Check for incorrect wiring in the drive output and encoder. Also, check the connection and load status of the equipment. |
| AL-55 | Motor overrun | Motor overrun | Check for incorrect wiring in the drive output and encoder. Also, check the connection and load status of the equipment. |
| AL-63 | Parameter checksum | Parameter error | Factory reset [Cn-21]. |
| AL-64 | Parameter range | Parameter range error | Factory reset [Cn-21]. |
| AL-71 | Invalid factory setting | Factory setting error | Factory reset [Cn-21]. |
| AL-72 | GPIO setting | Output contact point setting error | Factory reset [Cn-21]. |

If a warning code is displayed as the current operation status [St-00], the servo drive is operating abnormally. Check what needs to be inspected for the issue.

| Warning State (CODE) | name | Details and causes | What to check |
|---|---|---|---|
| W-01 | RST_PFAIL | Main power phase loss | If the [P0-06] DIGIT 2 is set to 1, the main power fails. |
| W-02 | LOW_BATT | Battery low | |
| W-04 | OV_TCMD | Excessive Torque Command | You have entered a command that exceeds the maximum set torque. |
| W-08 | OV_VCMD | Excessive speed command | You have entered a command that exceeds the maximum set speed. |
| W-10 | OV_LOAD | Overload warning | The maximum overload [P0-13] has been reached. |
| W-20 | SETUP | Capacity settings | The electric current capacity of the motor is larger than that of the drive. |
| W-40 | UD_VTG | Low voltage warning | When [P0-06] DIGIT 2 is set to 1, the DC link voltage is 190 V or below. |
| W-80 | EMG | EMG contact | Check I/O wiring and [P2-09] value |

Warning code is displayed in hexadecimal, but it is displayed as the sum of respective warning codes when two or more warnings occur at once. For example, warning code is displayed as [W-0C] when both [W-04] Excessive Torque Command and [W-08] Excessive Speed Command occur at once.

If [W-80] occurs, SVON turns from ON to OFF. And when you turn on I/O power or change contact logic, [W-80] code is automatically deactivated.

## ■ Servo Drive Overload Graphs (1.0KW)

**(1) Rotation overload graph**

| Load (%) | AL-21 Occurring Time (sec) | Max | Min | Load (%) | AL-21 Occurring Time (sec) | Max | Min |
|---|---|---|---|---|---|---|---|
| 100% or lower | Infinite | | | | | | |
| 110 | 55776 | 89241.6 | 33465.6 | 210 | 100 | 160.0 | 60 |
| 120 | 13944 | 22310.4 | 8366.4 | 220 | 60 | 96.0 | 36 |
| 130 | 6197.3 | 9915.7 | 3718.38 | 230 | 40 | 64.0 | 24 |
| 140 | 3486 | 5577.6 | 2091.6 | 240 | 30.3 | 48.5 | 18.18 |
| 150 | 1183 | 1892.8 | 709.8 | 250 | 24.2 | 38.7 | 14.52 |
| 160 | 566 | 905.6 | 339.6 | 260 | 7 | 11.2 | 4.2 |
| 170 | 318 | 508.8 | 190.8 | 270 | 6.4 | 10.2 | 3.84 |
| 180 | 198 | 316.8 | 118.8 | 280 | 5.7 | 9.1 | 3.42 |
| 190 | 160 | 256.0 | 96 | 290 | 4 | 6.4 | 2.4 |
| 200 | 130 | 208.0 | 78 | 300 | 3 | 4.8 | 1.8 |

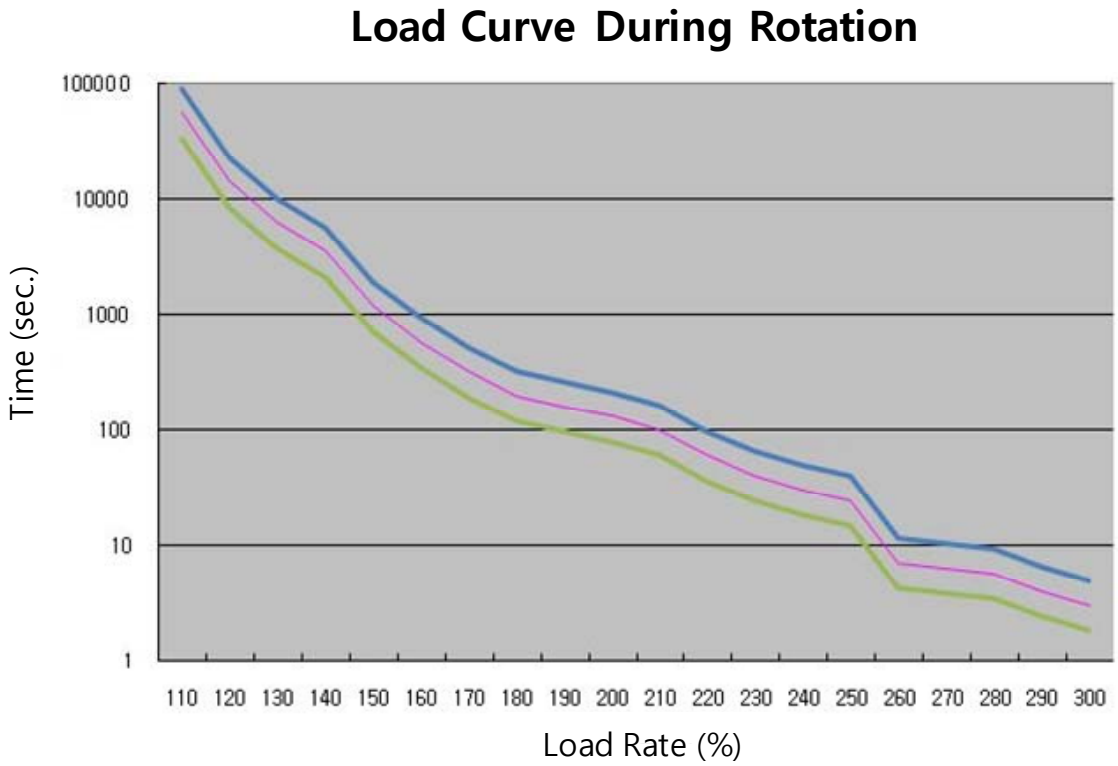

**(2) Stoppage overload graph**

| Load (%) | AL-21 Occurring Time (sec) | Max | Min | Load (%) | AL-21 Occurring Time (sec) | Max | Min |
|---|---|---|---|---|---|---|---|
| 100% or lower | Infinite | | | | | | |
| 110 | 37937.7 | 60700.3 | 22762.62 | 210 | 50.1 | 80.2 | 30.06 |
| 120 | 9483.9 | 15174.2 | 5690.34 | 220 | 38.5 | 61.6 | 23.1 |
| 130 | 4215.1 | 6744.2 | 2529.06 | 230 | 30.3 | 48.5 | 18.18 |
| 140 | 2371.0 | 3793.6 | 1422.6 | 240 | 9.7 | 15.5 | 5.82 |
| 150 | 926.0 | 1481.6 | 555.6 | 250 | 8.3 | 13.3 | 4.98 |
| 160 | 470.0 | 752.0 | 282 | 260 | 3.8 | 6.1 | 2.28 |
| 170 | 273.0 | 436.8 | 163.8 | 270 | 3.4 | 5.4 | 2.04 |
| 180 | 173.0 | 276.8 | 103.8 | 280 | 3.1 | 5.0 | 1.86 |
| 190 | 117.0 | 187.2 | 70.2 | 290 | 2.7 | 4.3 | 1.62 |
| 200 | 66.0 | 105.6 | 39.6 | 300 | 2.0 | 3.2 | 1.2 |

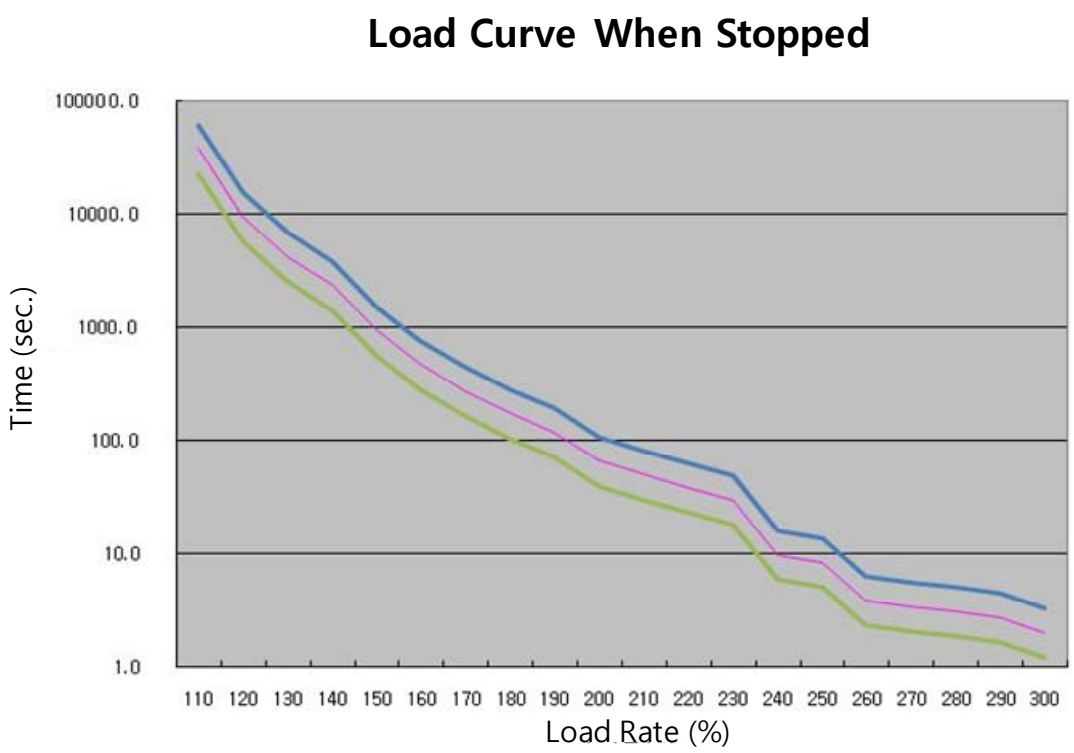

## ■ Servo Drive Overload Graphs (3.5KW)

### (1) Rotation overload graph

| Load (%) | AL-21 Occurring Time (sec) | Max | Min | Load (%) | AL-21 Occurring Time (sec) | Max | Min |
|---|---|---|---|---|---|---|---|
| 110% or lower | Infinite | | | 210 | 85 | 136.0 | 51 |
| 120 | 1208 | 1932.8 | 724.8 | 220 | 54 | 86.4 | 32.4 |
| 130 | 500 | 800.0 | 300 | 230 | 33 | 52.8 | 19.8 |
| 140 | 323 | 516.8 | 193.8 | 240 | 25 | 40.0 | 15 |
| 150 | 250 | 400.0 | 150 | 250 | 20 | 32.0 | 12 |
| 160 | 231 | 369.6 | 138.6 | 260 | 18 | 28.8 | 10.8 |
| 170 | 180 | 288.0 | 108 | 270 | 15 | 24.0 | 9 |
| 180 | 164 | 262.4 | 98.4 | 280 | 12 | 19.2 | 7.2 |
| 190 | 120 | 192.0 | 72 | 290 | 3.5 | 5.6 | 2.1 |
| 200 | 100 | 160.0 | 60 | 300 | 85 | 4.0 | 1.5 |

## Load Curve During Rotation

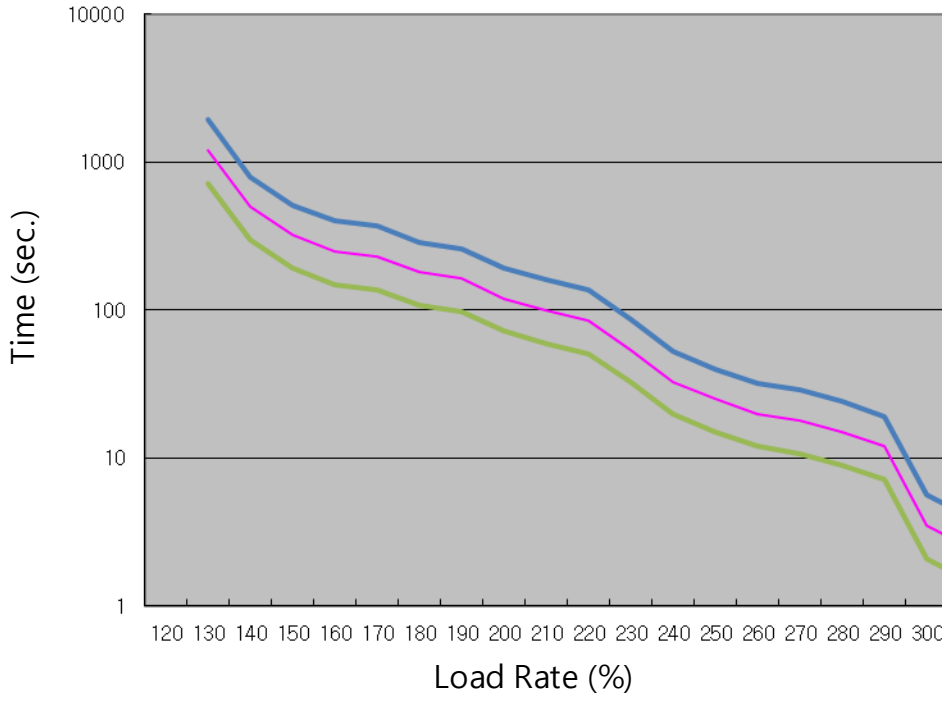

**(2) Stoppage overload graph**

| Load (%) | AL-21 Occurring Time (sec) | Max | Min | Load (%) | AL-21 Occurring Time (sec) | Max | Min |
|---|---|---|---|---|---|---|---|
| 100% or lower | Infinite | | | | | | |
| 110 | 4600 | 7360.0 | 2760 | 210 | 40 | 64.0 | 24 |
| 120 | 1208 | 1932.8 | 724.8 | 220 | 36 | 57.6 | 21.6 |
| 130 | 500 | 800.0 | 300 | 230 | 25 | 40.0 | 15 |
| 140 | 303 | 484.8 | 181.8 | 240 | 10 | 16.0 | 6 |
| 150 | 150 | 240.0 | 90 | 250 | 7.5 | 12.0 | 4.5 |
| 160 | 100 | 160.0 | 60 | 260 | 3.5 | 5.6 | 2.1 |
| 170 | 80 | 128.0 | 48 | 270 | 3.1 | 5.0 | 1.86 |
| 180 | 69 | 110.4 | 41.4 | 280 | 2.9 | 4.6 | 1.74 |
| 190 | 58 | 92.8 | 34.8 | 290 | 2.5 | 4.0 | 1.5 |
| 200 | 52 | 83.2 | 31.2 | 300 | 2.3 | 3.7 | 1.38 |

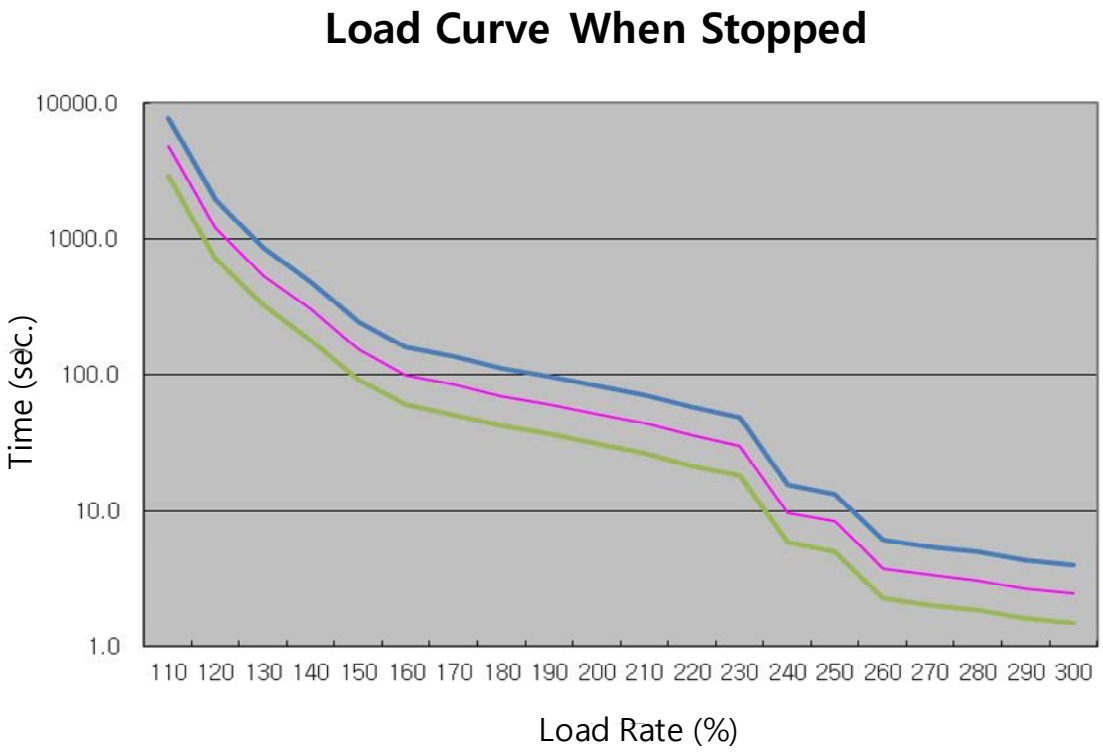

## ■ Servo Drive Overload Graphs (5KW)

### (1) Rotation overload graph

| Load (%) | AL-21 Occurring Time (sec) | Max | Min | Load (%) | AL-21 Occurring Time (sec) | Max | Min |
|---|---|---|---|---|---|---|---|
| 110%이하 | 무한대 | | | 210 | 66.8 | 93.52 | 40.08 |
| 120 | 4832 | 6764.8 | 2899.2 | 220 | 50.1 | 70.14 | 30.06 |
| 130 | 1208 | 1691.2 | 724.8 | 230 | 38.5 | 53.9 | 23.1 |
| 140 | 536.9 | 751.66 | 322.14 | 240 | 30.3 | 42.42 | 18.18 |
| 150 | 302 | 422.8 | 181.2 | 250 | 24.2 | 33.88 | 14.52 |
| 160 | 257 | 359.8 | 154.2 | 260 | 18 | 25.2 | 10.8 |
| 170 | 229 | 320.6 | 137.4 | 270 | 16 | 22.4 | 9.6 |
| 180 | 200 | 280 | 120 | 280 | 14 | 19.6 | 8.4 |
| 190 | 165 | 231 | 99 | 290 | 8 | 11.2 | 4.8 |
| 200 | 131 | 183.4 | 78.6 | 300 | 5 | 7 | 3 |

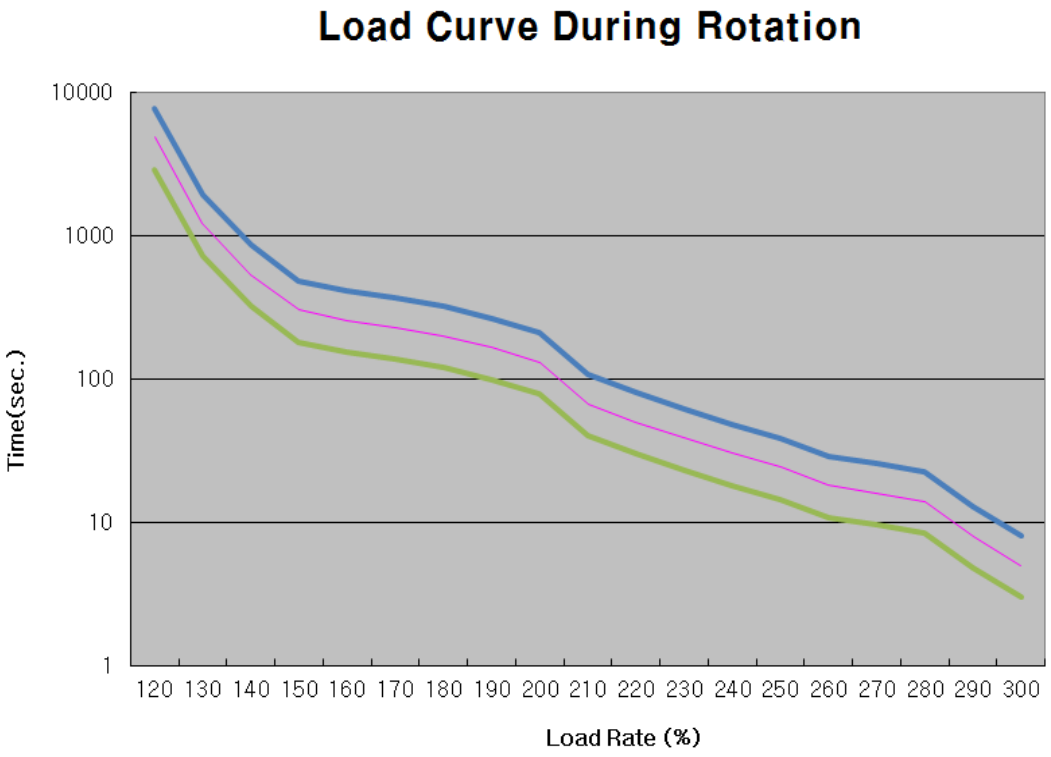

**(2) Stoppage overload graph**

| Load (%) | AL-21 Occurring Time (sec) | Max | Min | Load (%) | AL-21 Occurring Time (sec) | Max | Min |
|---|---|---|---|---|---|---|---|
| 100%이하 | 무한대 | | | | | | |
| 110 | 4832 | 6764.8 | 2899.2 | 210 | 61.6 | 26.4 | 44 |
| 120 | 1208 | 1691.2 | 724.8 | 220 | 50.4 | 21.6 | 36 |
| 130 | 536 | 750.4 | 321.6 | 230 | 42.42 | 18.18 | 30.3 |
| 140 | 302 | 422.8 | 181.2 | 240 | 13.58 | 5.82 | 9.7 |
| 150 | 154 | 215.6 | 92.4 | 250 | 11.62 | 4.98 | 8.3 |
| 160 | 100 | 140 | 60 | 260 | 5.32 | 2.28 | 3.8 |
| 170 | 85 | 119 | 51 | 270 | 4.76 | 2.04 | 3.4 |
| 180 | 70 | 98 | 42 | 280 | 4.34 | 1.86 | 3.1 |
| 190 | 61 | 85.4 | 36.6 | 290 | 3.78 | 1.62 | 2.7 |
| 200 | 52 | 72.8 | 31.2 | 300 | 3.5 | 1.5 | 2.5 |

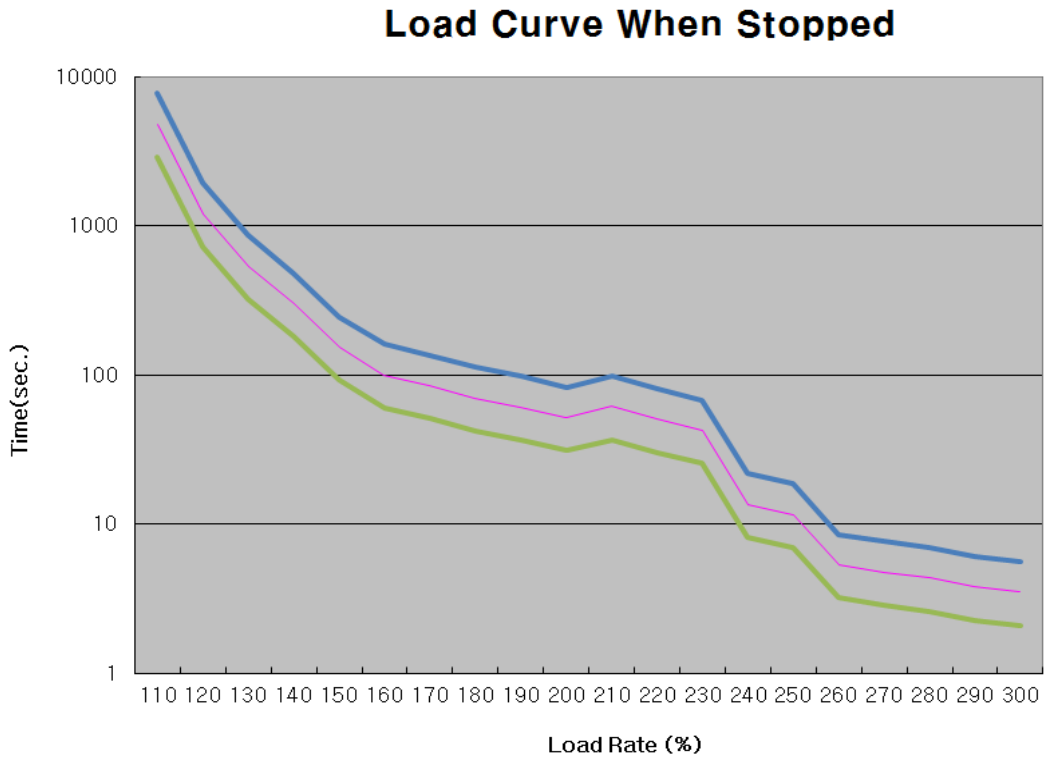

## ■ Servo Drive Overload Graphs (7.5KW)

**(1) Rotation overload graph**

| Load (%) | AL-21 Occurring Time (sec) | Max | Min | Load (%) | AL-21 Occurring Time (sec) | Max | Min |
|---|---|---|---|---|---|---|---|
| 100% or lower | Infinite | | | | | | |
| 110 | 5760 | 9216.0 | 3456 | 210 | 120 | 192.0 | 72 |
| 120 | 550 | 880.0 | 330 | 220 | 60 | 96.0 | 36 |
| 130 | 440 | 704.0 | 264 | 230 | 40 | 64.0 | 24 |
| 140 | 360 | 576.0 | 216 | 240 | 30 | 48.0 | 18 |
| 150 | 300 | 480.0 | 180 | 250 | 20 | 32.0 | 12 |
| 160 | 270 | 432.0 | 162 | | | | |
| 170 | 240 | 384.0 | 144 | | | | |
| 180 | 210 | 336.0 | 126 | | | | |
| 190 | 180 | 288.0 | 108 | | | | |
| 200 | 150 | 240.0 | 90 | | | | |

### Load Curve During Rotation

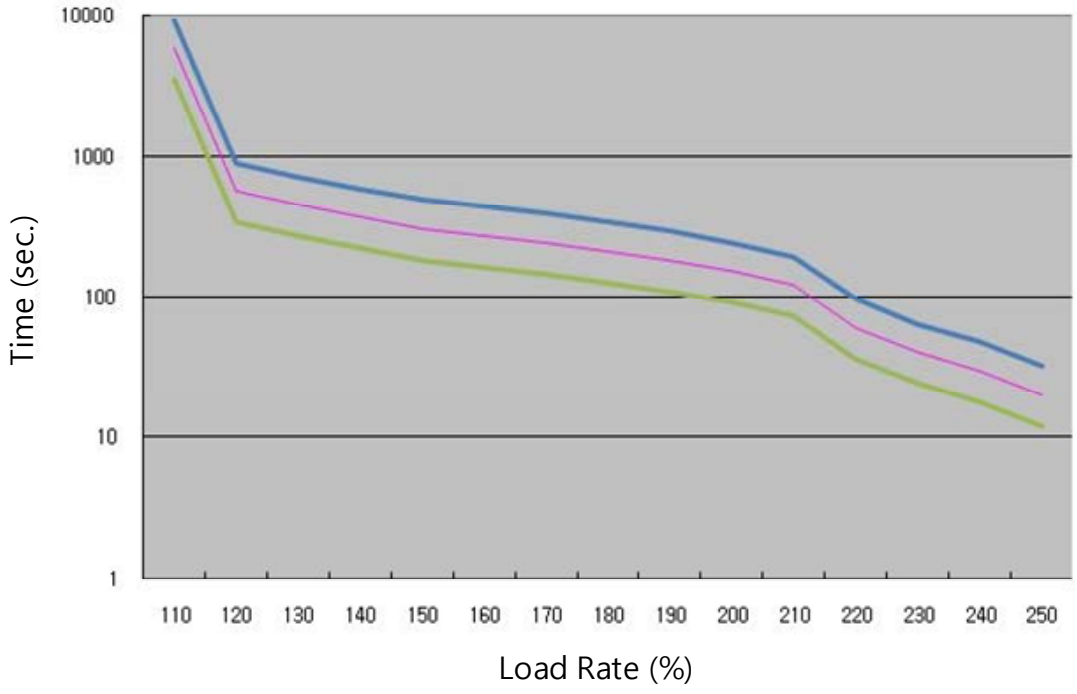

**(2) Stoppage overload graph**

| Load (%) | AL-21 Occurring Time (sec) | Max | Min | Load (%) | AL-21 Occurring Time (sec) | Max | Min |
|---|---|---|---|---|---|---|---|
| 100% or lower | Infinite | | | | | | |
| 110 | 420 | 672.0 | 252 | 210 | 20 | 32.0 | 12 |
| 120 | 300 | 480.0 | 180 | 220 | 12 | 19.2 | 7.2 |
| 130 | 250 | 400.0 | 150 | 230 | 7 | 11.2 | 4.2 |
| 140 | 200 | 320.0 | 120 | 240 | 2 | 3.2 | 1.2 |
| 150 | 150 | 240.0 | 90 | 250 | 1.5 | 2.4 | 0.9 |
| 160 | 120 | 192.0 | 72 | | | | |
| 170 | 100 | 160.0 | 60 | | | | |
| 180 | 60 | 96.0 | 36 | | | | |
| 190 | 45 | 72.0 | 27 | | | | |
| 200 | 35 | 56.0 | 21 | | | | |

## Load Curve When Stopped

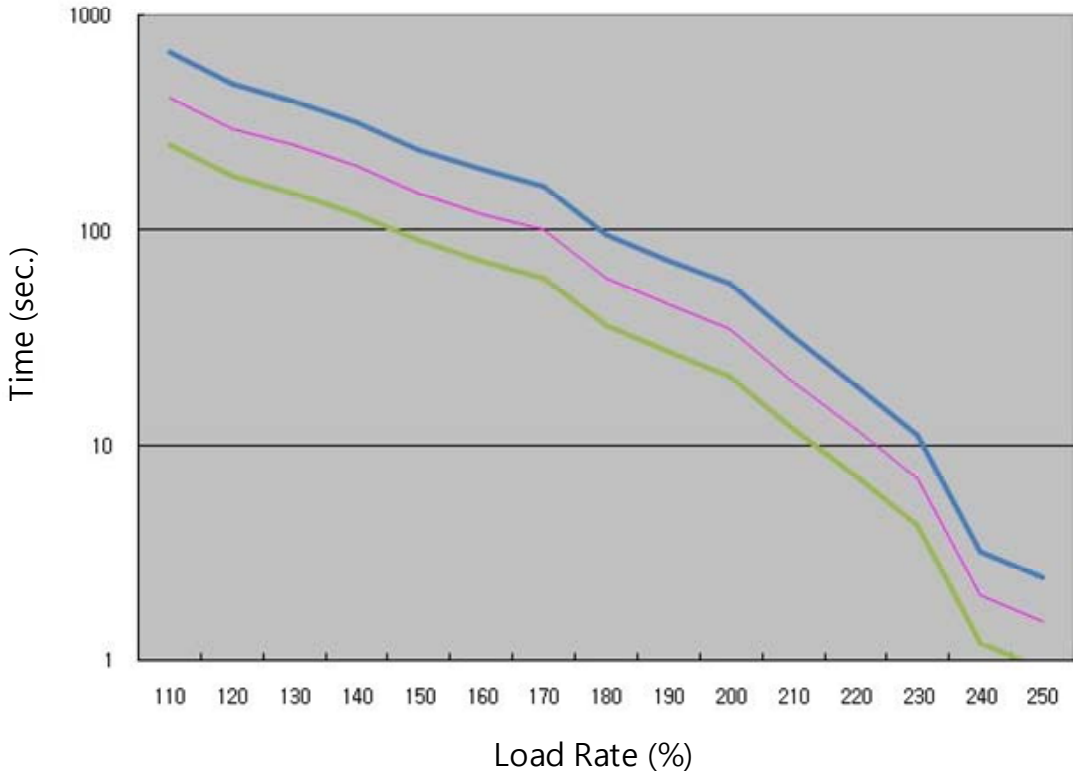

## ■ Servo Drive Overload Graphs (15KW)

**(1) Rotation overload graph**

| Load (%) | AL-21 Occurring Time (sec) | Max | Min | Load (%) | AL-21 Occurring Time (sec) | Max | Min |
|---|---|---|---|---|---|---|---|
| 100% or lower | Infinite | | | | | | |
| 110 | Infinite | Infinite | Infinite | 210 | 49 | 78.4 | 29.4 |
| 120 | 1998 | 3196.8 | 1198.8 | 220 | 42 | 67.2 | 25.2 |
| 130 | 630 | 1008.0 | 378 | 230 | 27.2 | 43.5 | 16.32 |
| 140 | 540 | 864.0 | 324 | 240 | 19.6 | 31.4 | 11.76 |
| 150 | 324 | 518.4 | 194.4 | 250 | 12 | 19.2 | 7.2 |
| 160 | 271.8 | 434.9 | 163.08 | | | | |
| 170 | 210.6 | 337.0 | 126.36 | | | | |
| 180 | 162.9 | 260.6 | 97.74 | | | | |
| 190 | 111 | 177.6 | 66.6 | | | | |
| 200 | 56 | 89.6 | 33.6 | | | | |

## Load Curve During Rotation

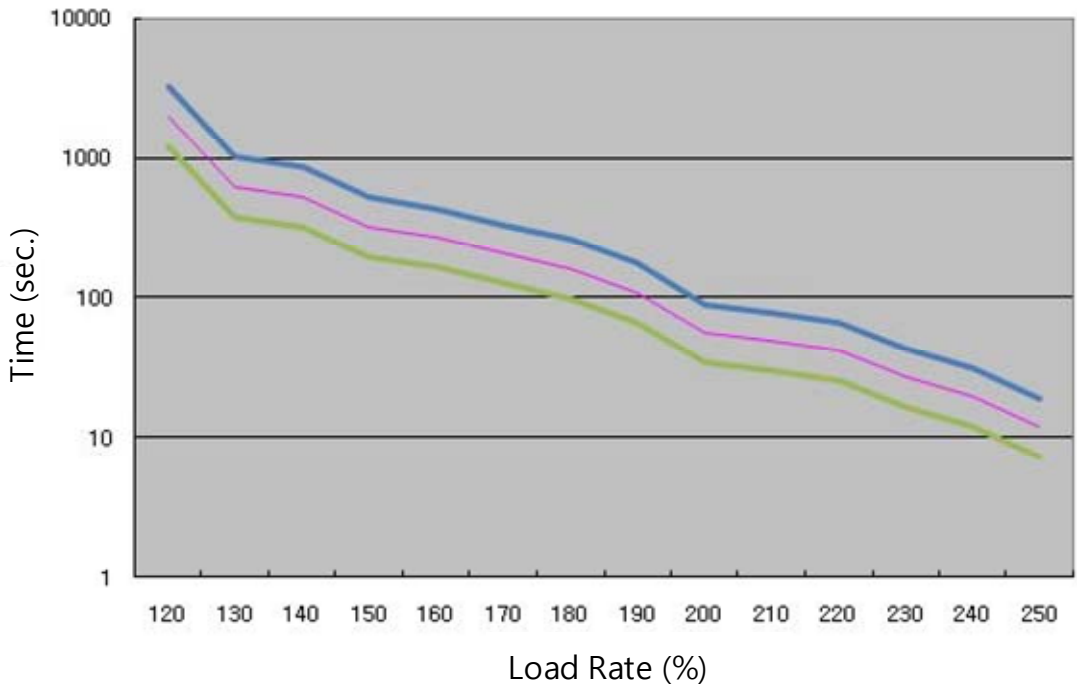

**(2) Stoppage overload graph**

| Load (%) | AL-21 Occurring Time (sec) | Max | Min | Load (%) | AL-21 Occurring Time (sec) | Max | Min |
|---|---|---|---|---|---|---|---|
| 100% or lower | Infinite | | | | | | |
| 110 | Infinite | Infinite | Infinite | 210 | 16.4 | 26.2 | 9.84 |
| 120 | 698.4 | 1117.4 | 419.04 | 220 | 13.5 | 21.6 | 8.1 |
| 130 | 524.2 | 838.7 | 314.52 | 230 | 10.6 | 17.0 | 6.36 |
| 140 | 350.1 | 560.2 | 210.06 | 240 | 7.8 | 12.5 | 4.68 |
| 150 | 176 | 281.6 | 105.6 | 250 | 3 | 4.8 | 1.8 |
| 160 | 135 | 216.0 | 81 | | | | |
| 170 | 94 | 150.4 | 56.4 | | | | |
| 180 | 60 | 96.0 | 36 | | | | |
| 190 | 32.8 | 52.5 | 19.68 | | | | |
| 200 | 19.3 | 30.9 | 11.58 | | | | |

## Load Curve When Stopped

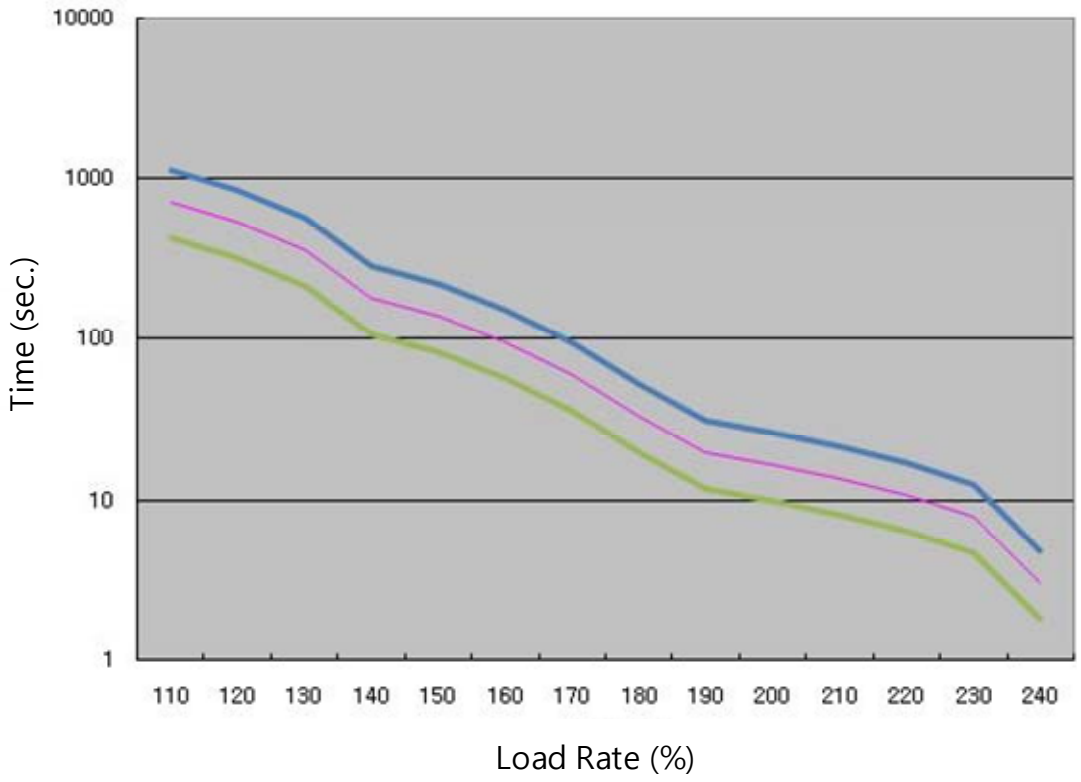

# 9. Appendix

## 9.1 Motor Types and IDs

| Model Name | ID | Watt | Notes |
|---|---|---|---|
| SEP09A | 461 | 900 | |
| SEP15A | 462 | 1500 | |
| SEP22A | 463 | 2200 | |
| SEP30A | 464 | 3000 | |
| SEP06D | 465 | 600 | |
| SEP11D | 466 | 1100 | |
| SEP16D | 467 | 1600 | |
| SEP22D | 468 | 2200 | |
| SEP03M | 469 | 300 | |
| | | | |
| SEP06M | 470 | 600 | |
| SEP09M | 471 | 900 | |
| SEP12M | 472 | 1200 | |
| SEP05G | 473 | 450 | |
| SEP09G | 474 | 850 | |
| SEP13G | 475 | 1300 | |
| SEP17G | 476 | 1700 | |
| SFP30A | 481 | 3000 | |
| SFP50A | 482 | 5000 | |
| SFP22D | 485 | 2200 | |
| SFP35D | 486 | 3500 | |
| SFP55D | 487 | 5500 | |
| SFP75D | 488 | 7500 | |
| SFP12M | 489 | 1200 | |
| SFP20M | 490 | 2000 | |
| SFP30M | 491 | 3000 | |
| SFP44M | 492 | 4400 | |
| SFP20G | 493 | 1800 | |
| SFP30G | 494 | 2900 | |
| SFP44G | 495 | 4400 | |
| SFP60G | 496 | 6000 | |
| SFP75G | 497 | 7500 | |
| | | | |
| SGP22D | 511 | 2200 | |

| Model Name | ID | Watt | Notes |
|---|---|---|---|
| SGP35D | 512 | 3500 | |
| SGP55D | 513 | 5500 | |
| SGP75D | 514 | 7500 | |
| SGP110D | 515 | 11000 | |
| | | | |
| SGP12M | 521 | 1200 | |
| SGP20M | 522 | 2000 | |
| SGP30M | 523 | 3000 | |
| SGP44M | 524 | 4400 | |
| SGP60M | 525 | 6000 | |
| | | | |
| SGP20G | 531 | 1800 | |
| SGP30G | 532 | 2900 | |
| SGP44G | 533 | 4400 | |
| SGP60G | 534 | 6000 | |
| SGP85G | 535 | 8500 | |
| SGP150G | 537 | 15000 | |
| | | | |
| | | | |
| | | | |
| | | | |
| | | | |
| | | | |
| | | | |
| | | | |
| | | | |
| | | | |
| | | | |
| | | | |
| | | | |
| | | | |
| | | | |
| | | | |
| | | | |
| | | | |
| | | | |
| | | | |

| Model Name | ID | Watt | Notes |
|---|---|---|---|
| FEP09A | 261 | 900 | |
| FEP15A | 262 | 1500 | |
| FEP22A | 263 | 2200 | |
| FEP30A | 264 | 3000 | |
| | | | |
| FEP06D | 265 | 600 | |
| FEP11D | 266 | 1100 | |
| FEP16D | 267 | 1600 | |
| FEP22D | 268 | 2200 | |
| | | | |
| FEP03M | 269 | 300 | |
| FEP06M | 270 | 600 | |
| FEP09M | 271 | 900 | |
| FEP12M | 272 | 1200 | |
| | | | |
| FEP05G | 273 | 450 | |
| FEP09G | 274 | 850 | |
| FEP13G | 275 | 1300 | |
| FEP17G | 276 | 1700 | |
| | | | |
| FFP30A | 281 | 3000 | |
| FFP50A | 282 | 5000 | |
| | | | |
| FFP22D | 285 | 2200 | |
| FFP35D | 286 | 3500 | |
| FFP55D | 287 | 5500 | |
| FFP75D | 288 | 7500 | |
| | | | |
| FFP12M | 289 | 1200 | |
| FFP20M | 290 | 2000 | |
| FFP30M | 291 | 3000 | |
| FFP44M | 292 | 4400 | |
| | | | |
| FFP20G | 293 | 1800 | |
| FFP30G | 294 | 2900 | |
| FFP44G | 295 | 4400 | |

| Model Name | ID | Watt | Notes |
|---|---|---|---|
| FFP60G | 296 | 6000 | |
| FFP75G | 297 | 7500 | |
| | | | |
| FGP22D | 311 | 2200 | |
| FGP35D | 312 | 3500 | |
| FGP55D | 313 | 5500 | |
| FGP75D | 314 | 7500 | |
| | | | |
| FGP12M | 321 | 1200 | |
| FGP20M | 322 | 2000 | |
| FGP30M | 323 | 3000 | |
| FGP44M | 324 | 4400 | |
| | | | |
| FGP20G | 331 | 1800 | |
| FGP30G | 332 | 2900 | |
| FGP44G | 333 | 4400 | |
| FGP60G | 334 | 6000 | |

# 9.2 Test Drive Procedure

Thank you for purchasing our product. Perform the following process to conduct the initial test drive:

**⚠ Caution**

In order to prevent accidents, conduct an operation test and test drive in manual JOG operation when there is no load (the motor exists without any coupling or belt) after attaching the servo motor to your equipment. Afterwards, connect the load and conduct the final test drive.

**1.** Product check: Check the name tag to verify that the product received matches the model ordered (refer to section 1.1).

- A name tag is attached to the right side of the product. (to the right side of the shaft on the motor).
- Main check point: Product capacity and main options

**2.** Power connection: Wire a single-phase AC 380[V] power supply to control power input C1 and C2, and wire a three-phase AC 380 V-480V power supply to main power input L1, L2, and L3. (refer to section 3.2).

- Make sure that 3-phase AC 380 V-480 V power is input as main power before using our product.

**3.** Signal cable wiring: Wire CN1 (I/O), CN3, CN4, CN5 (communication), CN2 encoder cable, and motor power cable per operation mode. (refer to section 1.2 and chapter 3).

- Be sure to use robot cables if the motor requires movement.
- Be sure to use twist shield cables as signal and encoder cables.
- Be sure to fasten bolts after locking the connector (drive direction) of the encoder cable.
- Be sure not to change the U, V, and W wiring of the motor power cable.

**4.** Control power supply: Supply single-phase AC 380 V power to C1 and C2.

- Be sure to check external input voltage before turning on the servo drive.
- Check whether the display is normal. (There should be no break on the seven segments or alarm output.)

**5.** Motor ID setting: Set motor ID in the parameter [P0-00] and encoder pulse in the parameter [P0-02] respectively. (Refer to "Appendix 1.")

(※ The serial encoder is automatically set.)

- Easy check: Check the motor ID and encoder pulse on the product name tag attached on the right side of the motor.
- Check whether the external control signal input is normal.
- For information on how to handle the keys of the servo drive loader, refer to "4.1 Loader Handling."

**6.** Main power supply: Supply three-phase AC 380 V-480 V power to L1, L2 and L3.

- Be sure to check external input voltage before turning on the servo drive.
- When power is supplied, the red lamp on the charge LED at the bottom of the loader window comes on.
- If an alarm appears, it indicates that there is an error in the power circuit, servo motor wiring, or encoder wiring.
  Turn off power and fix the error using the information in "[Alarm Codes and Descriptions]."

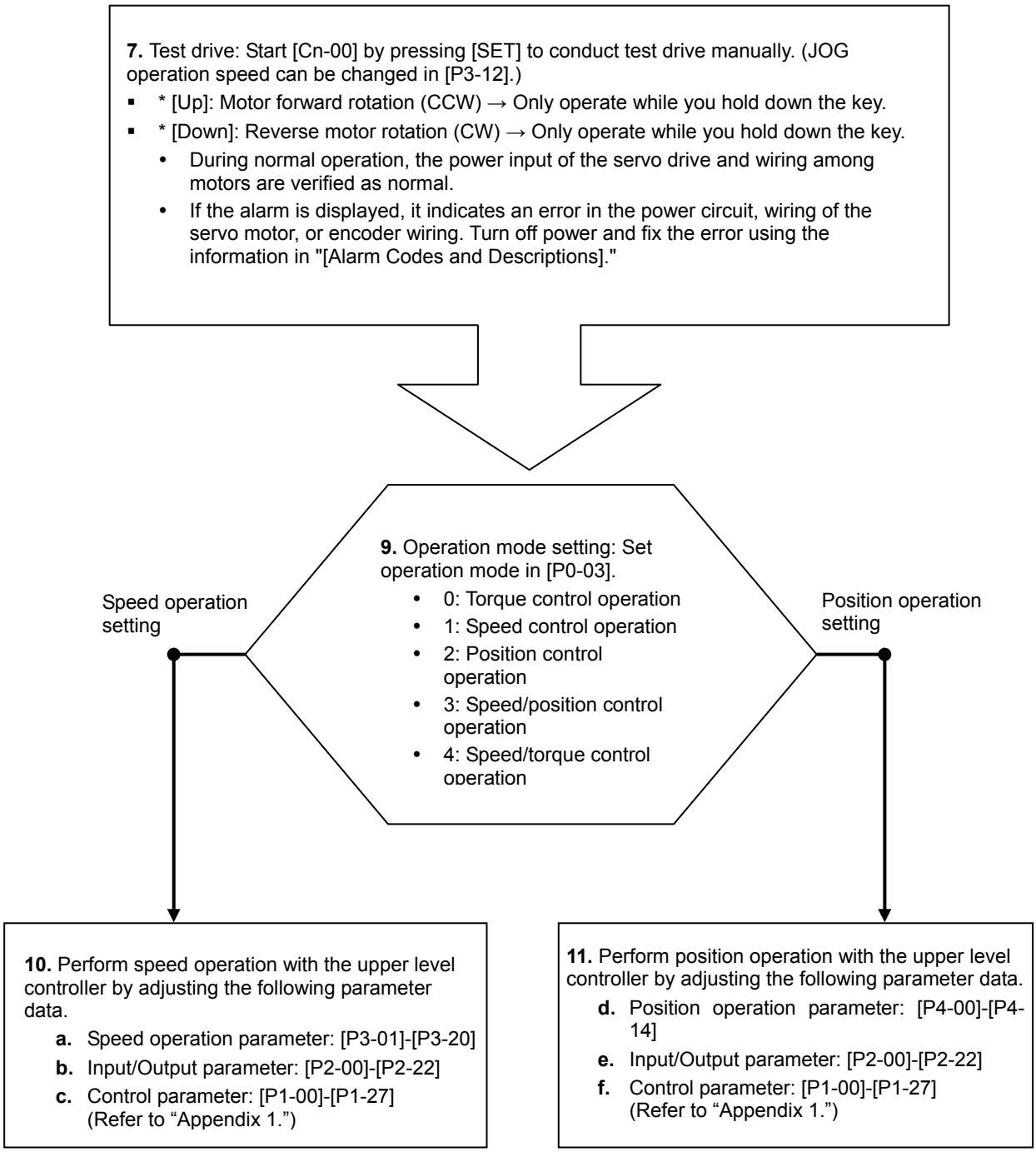
7. Test drive: Start [Cn-00] by pressing [SET] to conduct test drive manually. (JOG operation speed can be changed in [P3-12].)
▪ * [Up]: Motor forward rotation (CCW) → Only operate while you hold down the key.
▪ * [Down]: Reverse motor rotation (CW) → Only operate while you hold down the key.
• During normal operation, the power input of the servo drive and wiring among motors are verified as normal.
• If the alarm is displayed, it indicates an error in the power circuit, wiring of the servo motor, or encoder wiring. Turn off power and fix the error using the information in "[Alarm Codes and Descriptions]."
9. Operation mode setting: Set operation mode in [P0-03].
• 0: Torque control operation
• 1: Speed control operation
• 2: Position control operation
• 3: Speed/position control operation
• 4: Speed/torque control operation
Speed operation setting
Position operation setting
10. Perform speed operation with the upper level controller by adjusting the following parameter data.
a. Speed operation parameter: [P3-01]-[P3-20]
b. Input/Output parameter: [P2-00]-[P2-22]
c. Control parameter: [P1-00]-[P1-27] (Refer to “Appendix 1.”)
11. Perform position operation with the upper level controller by adjusting the following parameter data.
d. Position operation parameter: [P4-00]-[P4-14]
e. Input/Output parameter: [P2-00]-[P2-22]
f. Control parameter: [P1-00]-[P1-27] (Refer to “Appendix 1.”)

**10-1**

- How to Set Control Parameters [Gain Tuning]

  1) Auto gain tuning

  → Perform automatic gain tuning by pressing [SET] in [Cn-05].

  → If the load condition of the equipment is not directly related to motor shaft, it is hard to perform accurate gain tuning because of characteristics of automatic gain tuning. Therefore, manual gain tuning is recommended.

  2) Manual gain tuning

  → Set inertia ratio [P1-00], speed proportional gain [P1-06], and speed integral time constant [P1-08] as the standard gain.

  → Increase inertia ratio [P1-00] gradually until the motor starts vibrating.

  → For more stable control, increase speed proportional gain [P1-06] a little at a time until the motor vibrates slightly. If you increase speed integral time constant [P1-08], the motor stops vibrating.

  → Increase speed integral time constant [P1-08] in the last stage and the motor will stop vibrating. However, it takes as much time to reach normal state as the time constant set in responsiveness. If you set speed proportional gain [P1-06] too big in an effort to attain satisfying responsiveness, overshoot might occur. The allowed range of overshoot is generally 10 percent or below.

**11-1**

- How to Set Electric Gear Ratio [P4-01]-[P4-05]

  → Electric gear ratio = transmission per input pulse X number of pulses per motor rotation / transmission per motor rotation

# User Manual Revision History

| Number | Date issued | Revised content | Version number | Notes |
|---|---|---|---|---|
| 1 | 2013.06.20 | Modified miss printing and drawing | 1.1 | |
| 2 | 2014.03.13 | Added functions and precautions | 1.2 | |
| 3 | 2014.08.06 | Added wiring with PLC, New motor and cables. Indicated applicable mode on the parameter. | 1.3 | |
| 4 | 2014.11.06 | Added New Model(XDL-L7NHB050U) | 1.4 | |
| 5 | | | | |
| 6 | | | | |
| 7 | | | | |
| 8 | | | | |
| 9 | | | | |

## Green Management

LSIS considers protecting the environment a high priority. We work hard to protect the Earth.

## Product Disposal

The LSIS servo drive is environmentally friendly.

You can disassemble the drive and recycle the iron, aluminum, bronze and synthetic resin (cover) components.




**LSIS values every single customers.**

**Quality and service come first at LSIS.**

**Always at your service, standing for our customers.**

**http://www.lsis.com**

LS IS

■ **HEAD OFFICE**
LS Tower, 127, LS-ro, Dongan-gu, Anyang-si,Gyeonggi-do, 431-848
Korea http://eng.lsis.com
Tel : (82-2)2034-4870/Fax : 82-2-2034-4648 e-mail : cshwang@lsis.com

■ **LSIS Tokyo Office _ Tokyo, Japan**
Address: 16FL. Higashi-Kan. Akasaka Twin Tower 17-22,
Akasaka.Monato-ku Tokyo 107-8470. Japan
Tel : 81-3-3582-9128/Fax : 81-3-3582-2667 e-mail : jschuna@lsis.com

■ **LSIS (ME) FZE _ Dubai, U.A.E.**
Address : Jafza View Tower Lob 19, Room 205 Along Sheikh Zayed
Road Jebel Aali Free Zone Dubai, United Arab Emirates
Tel : 971-4-886-5360/Fax : 971-4-886-5361 e-mail : jungyongl@lsis.com

■ **LSIS Shanghai Office _ Shanghai, China**
Address : Room E-G. 12FL Hiamin Empire Plaza. No.726. West.
Yan'an Road Shanghai 200050. P.R. China e-mail : liyong@lsis.com.cn
Tel : 86-21-5237-9977(609)/Fax : 89-21-5237-7189

■ **LSIS Beijing Office _ Beijing, China**
Address : B-Tower 17FL. Beijing Global Trade Center B/D. No. 36.
East BeisanHuan-Road. DongCheng-District. Beijing 100013. P.R. China
Tel : 86-10-5825-6027(666)/Fax : 86-10-5825-6028 e-mail : xunmj@lsis.com.cn

■ **LSIS Guangzhou Office _ Guangzhou, China**
Address : Room 1403.14FL. New Poly Tower.
2 Zhongshan Liu Road.Guangzhou.P.R China
Tel : 86-20-8328-6754/Fax : 86-20-8326-6287 e-mail : chenxs@lsis.com.cn

■ **LSIS Chengdu Office _ Chengdu, China**
Address : 12FL. Guodong Buiding. No.52 Jindun
Road Chengdu.610041. P.R. China
Tel : 86-28-8612-9151(9226)/Fax : 86-28-8612-9236 e-mail : comysb@lsis.com

■ **LSIS Qingdao Office _ Qingdao, China**
Address : YinHe Bldg. 402 Room No. 2P Shandong Road,
Qingdao-City,Shandong-province 266071, P.R. China
Tel : 86-532-8501-6068/Fax : 86-532-8501-6057 e-mail : wangzy@lsis.com.cn

■ **LSIS Europe B.V. , Netherlands**
Address : 1st. Floor, Tupolevlaan 48, 1119NZ, Schiphol-Rijk, The Netherlands
Tel : +31 (0)20 654 1420/Fax : +31 (0)20 654 1429 e-mail : junshickp@lsis.com

■ **Wuxi LSIS Co., Ltd _ Wuxi, China**
Address : 102-A. National High & New Tech Industrial Development Area.
Wuxi. Jiangsu. 214028. P.R. China
Tel : 86-510-8534-6666/Fax : 86-510-8534-4078 e-mail : caidx@lsis.com.cn

■ **Dalian LSIS Co., Ltd. _ Dalian, China**
Address : No. 15. Liaohexi 3-Road. Economic and Technical Development zone.
Dalian 116600. China
Tel : 86-411-273-7777/Fax : 86-411-8730-7560 e-mail : cuibx@lsis.com.cn

※ LSIS constantly endeavors to improve its product so that information in this manual is subject to change without notice.

ⓒ LSIS Co., Ltd 2013 All Rights Reserved.

**2015. 5**