INSTRUCTION BOOK
FOR
INSTALLATION, OPERATION AND MAINTENANCE
OF INCINERATOR
Type MAXI 50/100/150 SL-1 WS

HYUNDAI MARINE MACHINERY CO.,LTD.
602-15, GAJWA-DONG SEO-GU, INCHOEN CITY, KOREA.
TEL : +82-32-583-0671 FAX : +82-32-583-0674
URL : http://www.hmmco.co.kr
E-mail : jhkim133@hmmco.co.kr

Update : V3-20060307

INSTRUCTION BOOK FOR INSTALLATION OF INCINERATOR OF HYUNDAI – ATLAS TYPE MAXI 50/100/150 SL-1 WS

TABLE OF CONTENTS

INSTALLATION INSTRUCTIONS
Installation & storage instruction for incinerators 3
Instruction for installation 4
Description of incinerator 8
Basic principles 9
Working principles 10
Description of process diagram 11
Technical data for incinerator 17
Technical data – components 20

INSTRUCTION FOR OPERATION:
Operating instructions 24

INSTRUCTION FOR OPERATION OF INCINERATOR :
Operating instructions 27
Calorific values in some waste products 30
Warning 32
General instructions for operation of incinerator 33

TROUBLE SHOOTING :
Trouble shooting chart – incinerator 36
Trouble shooting chart – W.O dosing pump PU-3 42

INSTRUCTION FOR OPERATION AND MAINTENANCE OF PARTS :
Operating instructions for digital temperature controller 44
Operating instructions for flue gas temp. controller 51
Operation instructions for burner control box 59
Primary burner – instruction for operation and maintenance 66
W.O dosing pump (PU-3) operating and maintenance instruction 67
Sludge burner 71
Instruction for repair of refractory lining 73
Scheme for maintenance 74
Lubrication scheme 75

LIST OF PARTS :
Component drawing 77
List of component 80
Parts list for primary burner 82
Parts list for W.O dosing pump 83
Parts list for sludge burner 85

ADDITIONAL DRAWING & COMPONENTS :
Instructions for operation (PU-5) 87
Technical data – Mill pump(PU-5) 88
Part list for PU-5 89

Update : V3-20060307

Part 1
INSTALLATION INSTRUCTIONS

INSTALLATION & STORAGE
INSTRUCTION FOR INCINERATORS

1.0 INSTALLATION OF INCINERATOR

The incinerator should be installed and placed according to the rules of the Classification Societies and to the National Shipping Boards.

When installing the incinerator the following points must be observed:

Ⅰ It must be possible to stop the operation of the incinerator from a place outside the room in which it is placed.

Ⅱ Stationary placed fire-fighting equipment must be available for the room in which the incinerator is placed.

2.0 STORAGE INSTRUCTION FOR INCINERATORS

HYUNDAI-ATLAS Incinerators standard and the storage environmental conditions must be as follows ;

1. Air temperature : 0℃ to +50℃, temp. drop max. 10℃/h
2. Humidity : 0 ～ 7% relative
3. Wind : Below 10m/sec
4. Shocks : Below 1g. acceleration in all directions

El-panel must be stored in airtight packing Before packing the el-panel must equipped with some bags "Silica gel" inside in order to absorb possible humidity.

The pumps are not to be turned.

After elapse of storage period, all bolted packings must be tightened up.

The incinerator must only handle by fork, truck of by the lifting beam, and must not be exposed to mechanical damages.

Storage period : According to agreement.

The surface must not be heated to above 50℃ by solar radiation or other sources.

The incinerator must not to be exposed prolonged by sea water spray or rain must not hosed down or similarly expose.

After 12 month storage the lining has to heat up and dried-up acc. to incinerators instructions.

INSTRUCTION FOR INSTALLATION OF HYUNDAI-ATLAS INCINERATOR TYPE MAXI 50/100/150 SL-1 WS

1.0 REFERENCES

For capacity, dimensions and connections we refer to:

- Technical data, incinerator
- Technical data, components
- Dimension drawing
- Pipe diagram
- Arrangement for control panel and diagrams

2.0 INCINERATOR

The incinerator should be installed and placed according to the rules of the classification societies and to the national shipping boards.
In front of the feeding door for the sluice a space of min. 1.5m must be foreseen for feeding the refuse bags and inspection of the primary burner, thermocouple, valves, and the removal of ashes.
The incinerator should be placed in the ship where the vibrations are as few as possible and especially with regard to the transportation of solid waste and for the lay-out of the funnel.
We recommend floor plates around the incinerator rather than grids due to the risk of spillage of refuse and ashes.

3.0 DIESEL OIL SUPPLY - DIESEL OIL TANK

The supply and return pipe for diesel oil to and from the incinerator, see the dimension drawing. Pressure and suction conditions, see technical data for components. The diesel oil supply pipes should be provided with strainers to avoid any blocking of the pipes. The pump on the primary burner is also provided with strainers built in the pumps. The oil pump of the primary burner is a gear wheel pump which constantly circulates the oil in the circulation pipe.
The max. suction head for the diesel oil pump is 3 meters.

4.0 WASTE OIL TANK AND CIRCULATION PIPE

For supply and return pipe for oil sludge between the incinerator and the waste oil tank, See pipe diagram (Final drawing)

4.1 WASTE OIL TANK

The waste oil tank for waste oil has to be provided with a mill (PU-5) for agitation and comminution of the contents of the tank.
The tank must be designed with a view to securing an effective homogenization;
irregular shapes and webs should be avoided.

The waste oil tank is to be provided with :

a. Heater and temperature controller

b. Level switch for "low level" for stopping of incinerator when the tank is empty.
Level switch for "High level" and "Low level" as alarm function on the main panel of the ship should also be installed.

c. Mill for comminution and agitation of the sludge contents.

d. Thermostat for "Alarm high sludge temperature"

4.2 MILL PUMP (PU-5)

The suction branch of the mill should be placed as close to the sludge tank as possible. If the mill is placed lower than the sludge level, there should be a valve on the suction side.
The return pipe of the mill should be made as short as possible, i.e. the length must not exceed the diagonal of a 2 to 3 m^3 tank.

5.0 COMPRESSED AIR SUPPLY

For supply of compressed air to sluice on incinerator, see dimension drawing(Final drawing).
To avoid any blocking of the air pipe a strainer is needed in the air supply piping system.

5.1 SLUICE

The built-on non-flareback sluice for continuous feeding of solid waste is operated automatically by two pneumatic cylinders from a pushbutton panel (CP-3).

6.0 FLUE GAS FUNNEL

Dimension of funnel, see technical data of incinerator, dimension drawing, and installation drawing for mixing chamber. Max. counter pressure in funnel incl. outlet loss 300 Pa (30 mmAq)To obtain sufficient draught in the incinerator it is recommended to avoid too many sharp bending and dimension of funnel less than indicated in "Technical data of incinerator". If this is not possible, an in-line flue gas fan has to be mounted in the upper part of the funnel Thermocouple (TC-2) in funnel is supplied loose for mounting in funnel.

7.0 ELECTRICAL CABLE CONNECTION TO CONTROL PANEL

The power cable is connected directly to the control panel of the incinerator.
For cable entry, see arrangement for control panel and el-diagrams. The following connections are to be connected with the terminal row in the control panel:

- Main power
- Remote alarm
- Low level/high level switch on sludge tank (if needed)
- Thermocouple in funnel (TC-2)

8.0 AIR SUPPLY TO INCINERATOR ROOM

The air supply to the room where the incinerator is placed must be dimensioned in such a way that the air supply to the incinerator is sufficient and so that noise as well as inconvenience for the operator can be avoided.

9.0 ADDITIONAL INFORMATION

Fire Extinguishing Systems:

Fire extinguishing is to be provided to comply with regulation 6 of SOLAS 74, chapter Ⅱ-2, as amended. Each incinerator room is to be provided with one portable extinguisher for the extinguishing of oil fires.

Fixed Fire Detection Fire Alarm System:

If the incinerator room is to be periodically unattended, a fixed fire detection and fire alarm system is to be provided for the incinerator room. This system has to comply with regulation 14 of SOLAS 74, chapter Ⅱ-2, as amended.

Protection against Low Voltage:

It is the responsibility of the customer to ensure that no abnormal operation of the incinerator occurs due to low voltage. In general, a ship's generator system is secured against low voltage.
However, if this is not the case, the customer must design their electrical system so that the incinerator will not shut down at periods of low voltage.

Emergency Shut-Off Valve

The pipe system for supply and return of diesel oil and oil sludge to incinerator and tanks has to be provided with emergency shut-off valve operated outside the room, in accordance with the rules of the classification societies.

DESCRIPTION OF HYUNDAI-ATLAS INCINERATOR
TYPE MAXI 50/100/150 SL-1 WS

The MAXI incinerator is designed to incinerate solid waste and all types of combustible non-explosive oil sludge with a flash point of min. 60℃, without being a nuisance to the surroundings. The incinerator is made as a compact plant of the multi-chamber design,
The incinerator is delivered with the following built-on main components:

- Primary blower for cooling and combustion air
- Sludge burner
- W.O dosing pump
- Primary burner for primary combustion chamber
- Control panel (CP-1) and (CP-3)
- Thermocouples for detecting temperatures and alarm in primary combustion chamber
- Internal electric-cable oil/air pipes and valves
- Automatic built-on non-fallback sluice supplied loose for mounting in funnel:
- Thermocouple for detecting high flue gas temperature and alarm

BASIC PRINCIPLES OF HYUNDAI –ATLAS INCINERATOR TYPE MAXI 50/100/150 SL-1 WS

The incinerator is designed according to the basic principles of ensuring a highly efficient Combustion and a high degree of safety.

The first principles is relapsed by means of :

- High combustion temperature
- Secondary combustion chamber
- Level of inside insulation (maintenance a constant temperature in the combustion chamber).
- Reduction of pollution from the incinerator.

The high degree of safety is relapsed by fully automatic operation and monitoring of the Incinerator, complying with the word's most restrictive requirements. Furthermore by an air cooling flow surrounding the combustion chamber in the space between this and the external surface of the incinerator.
This degree of safety should eliminate any concern about the incinerator, once it has been installed.

THE INCINERATOR

The incinerator is designed with a primary combustion chamber for burning sludge oil and/or solid waste, and a secondary combustion chamber for burning out uncombusted exhaust gases.
The primary combustion chamber is equipped with a diesel oil burner called primary burner.

PRIMARY COMBUSTION CHAMBER

The incinerator is designed to combust solid waste and/or oil. The heat from the primary burner will dry out and start burning the solid waste and/or ignite the sludge oil.
The very large heat transmission area in the primary combustion chamber optimizes the drying and burning of the solid waste.

COMBUSTION SECONDARY CHAMBER

The primary and the secondary combustion chamber are separated by wall made of ceramic heavy duty refractory. In the secondary combustion chamber the gases from the primary combustion chamber will burn out.

HYUNDAI – ATLAS INCINERATOR
TYPE MAXI 50/100/150 SL-1 WS
WORKING PRINCIPLE

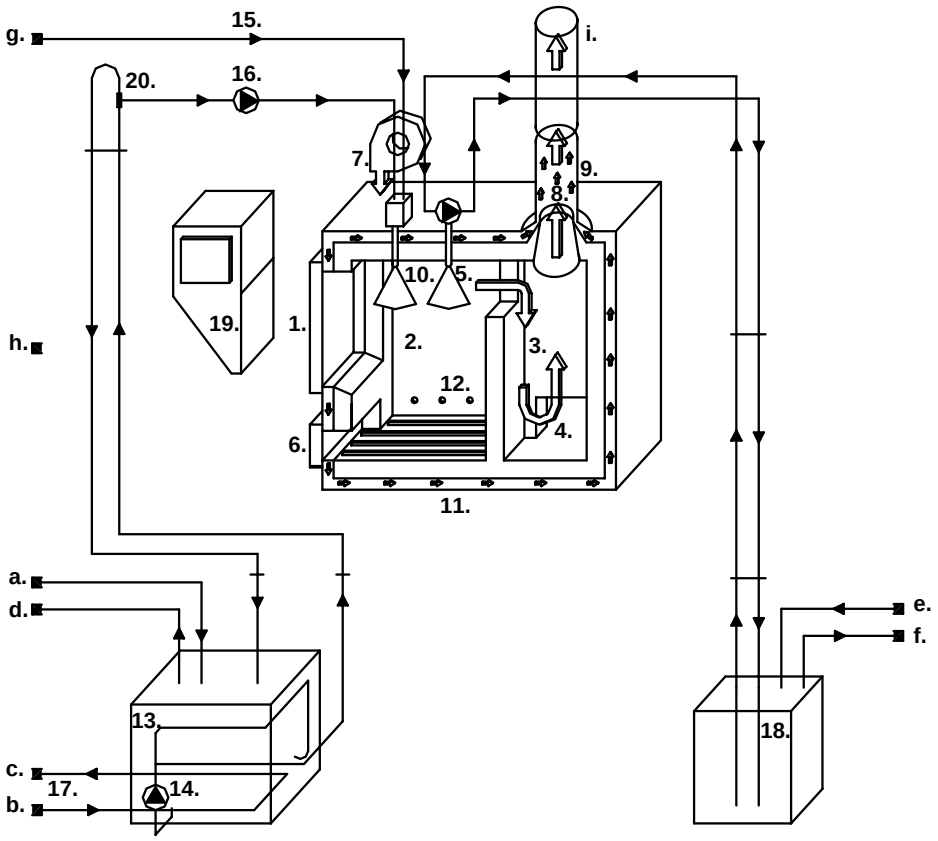

COMPONENTS

1. Charging Door
2. Combustion Chamber
3. Afterburning Chamber
4. Secondary After burning Chamber
5. Oil Burner With Built-in pump
6. Ash Cleaning Door
7. Primary Blower
8. Induced Draught Air
9. Damper
10. Sludge Burner
11. Double Air-cooling Wall
12. Combustion Air Inlets
13. Oil Sludge Service Tank
14. Mill Pump
15. Compressed Air
16. Sludge Dosing Pump
17. Heating Element
18. Diesel Oil Tank
19. Sluice for Solid Waste
20. Self cleaning Strainer

CONNECTIONS

a. Sludge Oil Inlet
b. Steam Inlet
c. Steam Outlet
d. Sludge Oil Ventilation Outlet
e. Diesel Oil Inlet
f. Diesel Oil Ventilation Outlet
g. Compressed Air Inlet
h. Electrical Power Supply
i. Flue Gas Outlet

DESCRIPTION OF FOR PROCESS DIAGRAM
HYUNDAI – ATLAS INCINERATOR
TYPE MAXI 50/100/150 SL-1 WS

Switch on Solid Waste

See process diagram on page 14.

POS. 1 – START OF INCINERATOR

Process timer, primary blower, and primary burner blower start.

POS.2 – STOP OF COMBUSTION

Stop of combustion stops the supply of diesel oil to primary burner.
Primary blower and primary burner blower are working on cooling programmed.

POS. 3 – STOP OF INCINERATOR

The cooling programmed stops when the temperature in the incinerator drops below 100℃.
When the incinerator has stopped, switch off the main switch on the control panel.

POS. 4 – START OF COMBUSTION

After start of the incinerator and after 30sec. Pre-purging time the primary burner (ST-1) in the primary combustion chamber will start.

POS. 5 – FLAME CONTROL

The primary burner is equipped with a flame control which is activated during the first 10 seconds after start, also after. After this period the burner is ignited or turned off according to the temperature in the chamber.

STOP OF COMBUSTION IN PRIMARY COMBUSTION CHAMBER

When the temperature in the primary combustion chamber reaches 950℃ the ignition of the primary burner will stop and the solenoid valve on the diesel oil pipe is closed.
All blower are operating.

RE-START HEATING IN PRIMARY COMBUSTION CHAMBER

When the temperature drops below 850℃ the primary burner in the primary combustion chamber restarts.

Switch on Sludge
See process diagram on page 15

POS. 1 – START OF INCINERATOR

Process timer, primary blower and primary burner blower start.

POS. 2 – STOP OF COMBUSTION

Stop of combustion stops the supply of diesel oil to primary burner, and stops the sludge oil supply to the sludge burner.
Primary blower and primary burner blower are working on cooling program.

POS. 3 – STOP OF INCINERATOR

The cooling program stops when the temperature in the incinerator drops below 100℃.
When the incinerator has stopped, switch off the main switch on the control panel.

POS. 4 – START OF PREHEATING

After start of the incinerator and after 30 sec. prepurging time the primary burner (ST-1) in the primary combustion chamber will start preheating.

POS. 5 – START OF COMBUSTION

After a preheating period of 13 minutes the sludge burner starts automatically and operates with in the set points. (850-950℃).

When the switch ‘delay primary burner’ is switched to automatic ‘AUT’, the primary burner operates for only 25 seconds to ignite the sludge burner automatically.

when the switch ‘delay primary burner’ is switched to manual ‘MAN’, the primary burner operates all the time together with the sludge burner.

POS. 6 – FLAME CONTROL

The flame control is activated for the 10 seconds after start-up of primary burner as well as after restart.

STOP OF COMBUSTION IN PRIMARY COMBUSTION CHAMBER

When the temperature in the primary combustion chamber reaches 950℃ the ignition of the primary burner will stop and the solenoid valve on the diesel oil pipe is closed.
All blower are operating.

RE-START HEATING IN PRIMARY COMBUSTION CHAMBER

When the temperature in the primary combustion chamber drops below 850℃ the sludge burner restarts.

When the switch ‘delay primary burner’ is switched to automatic ‘AUT’, the primary burner operates for only 25 seconds to ignite the sludge burner automatically.

When the switch ‘delay primary burner’ is switched to manual ‘MAN’, the primary burner operates all the time together with the sludge burner.

PROCESS DIAGRAM INCINERATOR

TYPE : MAXI 50/100/150 SL-1 WS

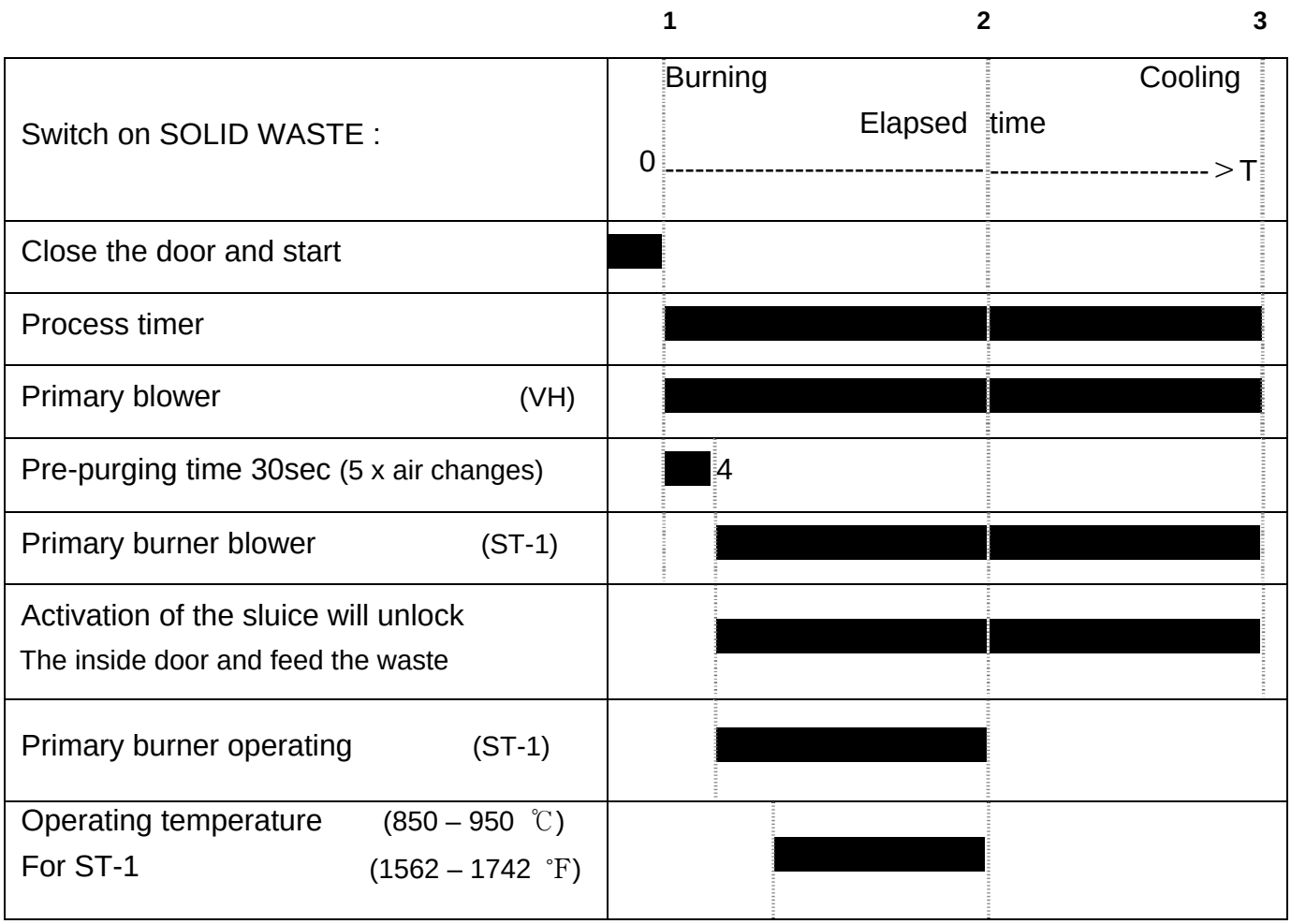

PROCESS DIAGRAM INCINERATOR

TYPE : MAXI 50/100/150 SL-1 WS

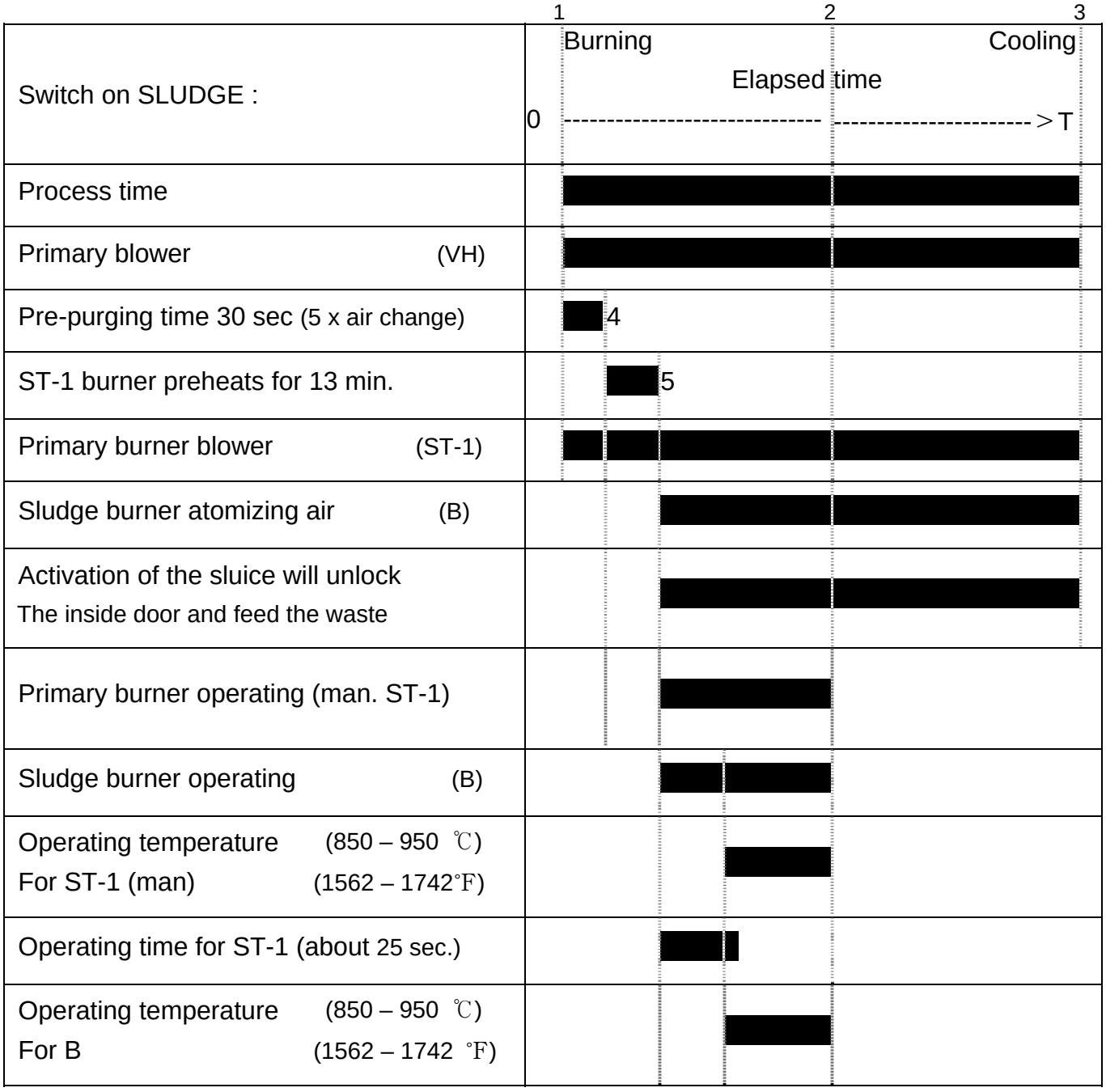

PROCESS DIAGRAM INCINERATOR

TYPE : MAXI 50/100/150 SL-1 WS

	1 2 3
Safety function enabled changes to cooling and alarm	Burning Cooling Elapsed time 0 ----------> T
High temperature incinerator (1050℃/1922°F)	
Low pressure combustion air (18 mbar)	
Low negative pressure primary combustion chamber	
Low pressure atomizing air (1.0 Kg/Cm^2)	
Flame failure	
High temperature exhaust gas	
Motor overload failure	
Sluice inside door not closed	

TECHNICAL DATA SHEET FOR HYUNDAI-ATLAS INCINERATOR TYPE MAXI 50SL-1 WS

MAIN DATA

Calorie capacity	: 372 kw (320,000 kcal/h)
Solid waste	: Max. 100 kg/h
Liquid waste	: Max.38 Kg/h
Retention time flue gas	: 1.0 sec.

DIMENSION BASIS FOR AIR AND OIL PIPE CONNECTION

Total air consumption incinerator	: 4,300m^3/h - 15℃
Flue gas funnel, min. diam.	: 350 mm
Flue gas temperature	: 350℃
Flue gas volume	: 9,300 m^3/h
Max. counter pressure in funnel, incl. outlet loss	: 300 Pa (30 mmAq)
Fuel oil consumption max. when heating the incinerator	: Approx. 8L
Compressed air consumption- sludge burner	: max. 16 m^3/h
Compressed air pressure	: 7~10 bar
Time to heat up to 700℃	: About 30 min.
Fuel oil	: Marine diesel oil Max. 14 cSt at 40℃
Inside diam. of diesel oil pipe	: Diameter. 8 mm

The amount of diesel oil depends on the heat value of the solid waste and the oil sludge.
As dimensioning basis for the diesel oil tank we suggest a 600 liter tank.

TECHNICAL DATA SHEET FOR HYUNDAI-ATLAS INCINERATOR TYPE MAXI 100SL-1 WS

MAIN DATA

Calorie capacity	: 580 kw (500,000 kcal/h)
Solid waste	: Max. 100 kg/h
Liquid waste	: Max.59 Kg/h
Retention time flue gas	: 1.0 sec.

DIMENSION BASIS FOR AIR AND OIL PIPE CONNECTION

Total air consumption incinerator	: 5,900m^3/h - 15℃
Flue gas funnel, min. diam.	: 500 mm
Flue gas temperature	: 350℃
Flue gas volume	: 14,300 m^3/h
Max. counter pressure in funnel, incl. outlet loss	: 300 Pa (30 mm Aq)
Fuel oil consumption max. when heating the incinerator	: Approx. 8L
Compressed air consumption- sludge burner	: max. 16 m^3/h
Compressed air pressure	: 9 bar
Time to heat up to 700℃	: About 30 min.
Fuel oil	: Marine diesel oil Max. 14 cSt at 40℃
Inside diam. of diesel oil pipe	: Diameter. 8 mm

The amount of diesel oil depends on the heat value of the solid waste and the oil sludge.
As dimensioning basis for the diesel oil tank we suggest a 600 liter tank.

TECHNICAL DATA SHEET FOR HYUNDAI-ATLAS INCINERATOR TYPE MAXI 150SL-1 WS

MAIN DATA

Calorie capacity	: 814 kw (700,000 kcal/h)
Solid waste	: Max. 150 kg/h
Liquid waste	: Max.82 Kg/h
Retention time flue gas	: 1.0 sec.

DIMENSION BASIS FOR AIR AND OIL PIPE CONNECTION

Total air consumption incinerator	: 6,600m^3/h - 15℃
Flue gas funnel, min. diam.	: 550 mm
Flue gas temperature	: 350℃
Flue gas volume	: 16,700 m^3/h
Max. counter pressure in funnel, incl. outlet loss	: 300 Pa (30 mmAq)
Fuel oil consumption max. when heating the incinerator	: Approx. 8L
Compressed air consumption- sludge burner	: max. 16 m^3/h
Compressed air pressure	: 9 bar
Time to heat up to 700℃	: About 30 min.
Fuel oil	: Marine diesel oil Max. 14 cSt at 40℃
Inside diam. of diesel oil pipe	: Diameter. 8 mm

The amount of diesel oil depends on the heat value of the solid waste and the oil sludge.
As dimensioning basis for the diesel oil tank we suggest a 600 liter tank.

HYUNDAT-ATLAS INCINERATOR
TYPE MAXI 50 SL-1 WS
TECHNICAL DATA - COMPONENTS

PRIMARY BLOWER (VH)

Is a high-pressure centrifugal fan of the welded design with a direct drive

Type air blower	: HTF - #3
Capacity	: 4,300 M^3/H
Static pressure	: 5,750 PA (575 mmAq)
Number of revolutions	: 3,516 RPM
Motor	: 11 Kw x 2P

W.O DOSING PUMP (PU-3)

Is a self-priming positive displacement pump with gear motor

Type pump	: HMD 008-12
Capacity, max.	: 19~105 l/h at 92 ~ 483 r.p.m
Head	: Max. 2 bar
Gear ratio	: 92 ~ 483 r.p.m.
Gear type	: Disco-variation
Motor	: 0.45 Kw x 2P

PRIMARY BURNER (ST-1)

Type burner	: DH 160 E2
Type oil pump	: BFP 21 L5
Fuel oil	: Marine diesel oil
Capacity	: 17 l/h
Motor	: 0.125 Kw – 3,360 r.p.m

CONTROL PANEL CP-1

Splash-proof grade made of hot-process steel plate.

Total installed motor output Kw	: 11.58 Kw
Demand factor	: 1
Alarm	: Normally closed circuit

HYUNDAT-ATLAS INCINERATOR
TYPE MAXI 100 SL-1 WS
TECHNICAL DATA - COMPONENTS

PRIMARY BLOWER (VH)

Is a high-pressure centrifugal fan of the welded design with a direct drive

Type air blower	: HTF - #3 1/2
Capacity	: 5,900 M^3/H
Static pressure	: 5,884 PA (600 mmAq)
Number of revolutions	: 3,540 RPM
Motor	: 18.5 Kw x 2P

W.O DOSING PUMP (PU-3)

Is a self-priming positive displacement pump with gear motor

Type pump	: HMD 012-12L
Capacity, max.	: 26~137 l/h at 92~483 r.p.m
Head	: MAX. 2 bar
Gear ratio	: 92~483 r.p.m.
Gear type	: Disco-variation
Motor	: 0.45 Kw x 2P

PRIMARY BURNER (ST-1)

Type burner	: DH 160 E2
Type oil pump	: BFP 21 L5
Fuel oil	: Marine diesel oil
Capacity	: 17 l/h
Motor	: 0.125 Kw – 3,360 r.p.m

CONTROL PANEL CP-1

Splash-proof grade made of hot-process steel plate.

Total installed motor output Kw	: 19.08 Kw
Demand factor	: 1
Alarm	: Normally closed circuit

HYUNDAT-ATLAS INCINERATOR
TYPE MAXI 150 SL-1 WS
TECHNICAL DATA - COMPONENTS

PRIMARY BLOWER (VH)

Is a high-pressure centrifugal fan of the welded design with a direct drive

Type air blower	: HTF - #3 1/2
Capacity	: 6,600 M^3/H
Static pressure	: 7,150 PA (715 mmAq)
Number of revolutions	: 3,520 RPM
Motor	: 22 Kw x 2P

W.O DOSING PUMP (PU-3)

Is a self-priming positive displacement pump with gear motor

Type pump	: HMD 012-12L
Capacity, max.	: 26~137 l/h at 92~483 r.p.m
Head	: MAX. 2 bar
Gear ratio	: 92~483 r.p.m.
Gear type	: Disco-variation
Motor	: 0.45 Kw x 2P

PRIMARY BURNER (ST-1)

Type burner	: DH 160 E2
Type oil pump	: BFP 21 L5
Fuel oil	: Marine diesel oil
Capacity	: 17 l/h
Motor	: 0.125 Kw – 3,360 r.p.m

CONTROL PANEL CP-1

Splash-proof grade made of hot-process steel plate.

Total installed motor output Kw	: 22.58 Kw
Demand factor	: 1
Alarm	: Normally closed circuit

HYUNDAT-ATLAS INCINERATOR
TYPE MAXI 50/100/150 SL-1 WS
TECHNICAL DATA - COMPONENTS

SLUDGE BURNER (B)

Is a special burner for impurities of max. 8 mm of the compressed air atomizing type made of heat resistant steel.

CONTROL PANEL CP-3

Control panel for activating the sluice. Splash-proof grade made of hot process steel plate.

Part 2
INSTRUCTION FOR OPERATION

OPERATING INSTRUCTION FOR HYUNDAI-ATLAS INCINERATOR TYPE MAXI 50/100/150 SL-1 WS

START-UP OF THE INCINERATOR

- Activate the main switch on the control panel.
- Reset the alarm lamps.
- Make sure that all the lamps are alight by activating the pushbutton for "lamp test" on each lamp.
  To start the incinerator activate the pushbutton for "start". The incinerator will now start automatically.

OIL SLUDGE AND SOLID WASTE

- Fill the primary combustion chamber.
- Close the feeding door.
- Activate the main switch.
- Reset the alarm lamps.
- Activate the pushbutton for sludge/solid waste and start the incinerator.

If the flame in the incinerator goes out at the start-up the first time, the incinerator is to be reset by means of the "reset" button on the control panel.

ADDING OF SOLID WASTE

Before adding a new charge of solid waste, check whether the incinerator is ready to receive more waste by looking through the sight glass of the sluice and by activating the sluice.

STOP OF THE INCINERATOR

Activate the "stop" pushbutton. When the temperature in the incinerator drops below 100℃ (212°F) the incinerator automatically stops.

ABNORMAL START-UP AND OPERATION OF INCINERATOR

By the first start-up of the incinerator oscillating combustion can occur which must be stopped immediately.

Activate the "stop" pushbutton.

If any problems occur during start-up and operation, the incinerator must be stopped immediately by activating the "stop" pushbutton.

See the instruction book under "Trouble shooting".

ATTENDANCE OF COMBUSTION CHAMBER FOR SOLID WASTE

Do not put glass and other materials, which may not be burned into the combustion chamber.
When the incinerator has cooled down, remove ashes and slag's from the combustion chamber.
The ashes and the slags must be carefully removed.
Do not knock or hammer on the sides of the chamber.
Do not fill wet solid waste into the combustion chamber more than one hour before starting the incinerator.
When combusting material with high heat value with explosion-like combustion, max. 8 kg/charge is allowed to be fed into the incinerator.

Do not overload the incinerator each types according to below charts.

Incinerator Type	Max. caloric per charge of solid waste (Kcal)	Max. 20% volume of the primary combustion chamber (Liter)
MAXI 50SL-1 WS	160,000	150
MAXI 100SL-1 WS	300,000	250
MAXI 150SL-1 WS	360,000	300

WARNING

DO NOT put explosive materials, closed containers or aerosols into the combustion chamber.

Part 3
INSTRUCTION FOR OPERATION OF INCINERATOR

OPERATING INSTRUCTIONS FOR HYUNDAI-ATLAS INCINERAOTR TYPE MAXI 50/100/150 SL-1 WS

Preparation for Start-up of the incinerator

Before start-up of the incinerator, the following is to be carried out:

1. Open all the inlet and outlet valves for diesel oil.
2. Open all inlet and outlet valves for sludge oil and air
3. Make sure that there are no hindrances for air admission to primary blower as well as flue gas outlet

A. Start-up of the Incinerator on program 'SOLID WASTE'.

1. Make sure that the switch is turned on 'sludge-off'
2. Activate the main switch on the control panel.
3. Reset the alarm lamps on the push button 'reset alarm'.
4. Make sure that all the lamps are alight by pressing the button 'lamp test'
5. For start of the incinerator, activate the switch for 'incinerator - start'.
6. The incinerator will now start automatically by activating the primary burner in the primary combustion chamber.
7. The incinerator then operates within the set temperatures (850 - 950℃).
8. If the flame in the incinerator goes out, the incinerator is to be reset by means of "reset flame failure burner"
9. Add solid waste to the primary combustion chamber using the sluice by activating the pushbutton on panel (CP-3)

B Start-up of the incinerator on program 'sludge'

1. Make sure that the switch is turned to 'sludge on'
2. Before start-up of the incinerator, follow the instructions given under point 'A', item 2 to 7 The primary burner in the primary combustion chamber will be activated. After a preheating period of 13 minutes the sludge burner starts automatically and operates within the set points (850 - 950℃)

   When the 'delay primary burner' is switched to automatic 'AUT', the primary burner operates for 25 seconds to ignite the sludge burner automatically.

   When the 'delay primary burner' is switched to manual 'MAN' the primary burner operates all the time together with the sludge burner.

C. Adding of Solid Waste

Before adding a new charge of solid waste, control whether the incinerator is ready to receive more waste or not, by looking through the sight glass.

D. Stop of Incinerator

1. Activate the switch 'incinerator stop'
2. When the temperature in the incinerator drops to below 100℃, the incinerator stops automatically.
3. When the incinerator has stopped, switch off the main switch on the control panel

E. Abnormal Start-up and Operation of Incinerator

1. By the first start-up of the incinerator, oscillating combustion can occur which must be stopped immediately. Activate the switch 'incinerator - stop'
2. If there should be any problems during start-up and operation, the incinerator is to be stopped immediately by activating the "incinerator - stop" switch.
3. Try to find the reason for this abnormal start-up/operation of the incinerator.
4. See the instruction manual under "Trouble Shooting"

F Attendance of the primary combustion chamber

1. Do not put glass, bottles, and other materials that may not be burned into the primary combustion chamber.
2. Do not fill wet solid waste into the primary combustion chamber more than one hour before starting the incinerator.
3. When burning oil-containing materials, such as filter cartridges, oily cotton waste, and scrapings from the centrifuges, do not put more than 10 liters per charge into the primary combustion chamber
4. When combusting material with high calorific value with explosion-like combustion, eg plastic, max.8 kg per charge is allowed to be fed into the incinerator.
5. DO NOT overload the incinerator with waste. Please see the chart on page 26.
6. when the incinerator is cold, remove ashes and slags from the primary combustion chamber. The ashes and the slages must be carefully removed. Do not knock or hammer on the sides of the primary combustion chamber. The main switch must be turned on to open the door

WARNING!

DO NOT put explosive materials, closed containers or aerosols into the combustion chamber.

DO NOT overload the incinerator each types according to below charts.

Incinerator Type	Max. Capacity	
	Kw/h	Kcal/h
MAXI 50SL-1 WS	372	320,000
MAXI 100SL-1 WS	580	500,000
MAXI 150SL-1 WS	814	700,000

CALORIFIC VALUES MEASURED IN SOME WASTE PRODUCTS SHOWN IN KCAL/KG

Kitchen waste	945	Acetone	6,667
Acetic acid	3,490	Natural rubber	6,672
Glass fiber	3,615	Disposable plastics	6,783
Wallpaper	3,695	Bakelite	6,950
Cardboard	3,786	Neoprene	7,065
Corrugated paper	3,916	Ethanol	7,400
Wrapping paper (brown)	4,034	Nylon	7,573
Cellulose	4,200	Car rubber tyres	8,123
Cotton	4,216	Waste oil	8,333
Chips from joiners shop	4,281	Butane	8,768
Carbon paper	4.361	ABS plastic	9,200
Shoe factory waste	4,380	Pork, lard	9,300
Newspapers	4,437	Olive oil	9,335
Dry cortex from spruce	4,500	Turpentine	9,444
Wool	4,590	Polyethylene remains	9,700
Dry cortex from fir	4,750	Paraffin	9,800
telex paper	4,758	Polystyrene	9,840
Uppers of shoes	4,882	Benzene/Benzol	10,116
PVC film	5,365	Wax paraffin	10,345
Dry cortex from birch	5,450	Kerosene	10,500
Polymeric film	5,542	Glass fiber strengthened by synthetic resin	10,840
Tar acid	5,600	White spirit	10,960
Methylated alcohol	5,695	Polythenes	11,000
Car motor oil	5,722	Polypropylene	11,040
Lienin	6,100	Polyethylene bottles	11,111
Cork waste	6,300		
Laminated paper	6,311		
Polystyrene	6,438		

IMO defines Solid Waste Class Ⅱ as follows expressed in percentages:

50% Food waste

50% Rubbish containing approx 30% paper, 40% cardboard, 10% rags, 20% plastic

The mixture will have up to 50% moisture and 7% incombustible solids.

Class Ⅱ waste:

Refuse, consisting of an approximately even mixture of rubbish and garbage by weight. this type of waste is common to passenger ships occupancy and has a heating value of approx. 2.400 kcal/kg (10.000 KJ/kg) as fired.

CALORIFIC VALUES OF DIFFERENT TYPES OF FUEL

Sludge Oil consisting of :	75% sludge oil from heavy fuel oil
(% by weight)	5% waste lubricating oil
	20% emulsified water
Low caloric value	8,600 kcal/kg (31,800 kJ/kg)
Density (kg/L):	0.98

Diesel oil:

Low caloric value:	10,130 kcal/kg (42,400 kJ/kg)
Density (kg/L):	0.84

WARNING

THIS INCINERATOR IS AUTOMATICALLY OPERATED

Do not activate the main power for the control panel before the cooling of the incinerator is finished and the incinerator has stopped.

WARNING !

Failure to observe the below instructions can result in substantial damages to burners and thermocouples.

1) Max, load per charge of solid waste - class Ⅱ :
   MAXI 25 70 L
   MAXI 50 150 L
   MAXI 100 250 L
   MAXI 150 300 L

2) Max. load per charge of oil-containing materials, ie filter cartridges, oily cotton waste, scrapings from centrifuges, etc.:
   MAXI 25 5 L
   MAXI 50 10 L
   MAXI 100 12 L
   MAXI 150 15 L

3) Max. load per charge of high-calorific materials with explosion-like combustion, ie plastics, fishing net, etc.
   MAXI 25 3 Kg
   MAXI 50 5 Kg
   MAXI 100 8 Kg
   MAXI 150 10 Kg

4) Do not burn explosive materials such as closed containers or aerosols.

5) Remove ashes when needed and make sure that the air holes for the combustion air are always unblocked.

6) Do not feed the incinerator without min. 10 mm vacuum in the combustion chamber, check U-tube (UM).

7) Too much draught can disturb a constant flame and prolong the heating-up time. Adjust damper in exhaust gas uptake and readjust after reaching working conditions.

8) Power loss during operation might cause overheating and consequently damage the incinerator.

Shipboard incineration of the following substances shall be prohibited

A) Annex I, II and III cargo residues and related contaminated packing materials.

B) Polychlorinated biphenyls . (PCBs)

C) Garage, as defined in annex V of MARPOL 73/78, containing more than traces of heavy metals

D) Refined petroleum products containing halogen compounds.

GUARANTEE CLAIMS:

All components mounted on the incinerator, including burners and flame tubes, are designed exclusively for the operating temperatures and max. loaded quantities of energy stated in this instruction book. Therefore, claims for damages caused by overheating will not be accepted.

GENERAL INSTRUCTION
FOR
OPERATION OF INCINERATOR
TYPE MAXI 50/100/150 SL-1 WS

CAUTION

If any problems occur during start-up and operation, the incinerator must be stopped immediately by switching the 'stop' switch to 'incinerator - stop'

REFRACTORY DRYING OUT

When the incinerator is used for the first time the refractory should be dried out properly before starting the combustion.

If your incinerator has been stored for a long time under humid conditions, the drying out procedure described below should be observed carefully before commissioning the incinerator.

If the drying procedure is omitted the refractory might be damaged.

Drying procedure:

- Operate the incinerator for 30 minutes at max. 200℃
- Stop the incinerator
- Let it cool down to 100℃
- Ventilate the incinerator by opening the door to the combustion chamber
- The drying procedure is repeated several times and the temperature is raised by 200℃ every time until the operating temperature has been reached.

PREPARATION BEFORE START OF INCINERATOR

1. Check that no valve in the diesel oil pipe is closed.
2. Check that no valve in the air pipe and the oil sludge pipe are closed
3. Check that there is no blockage of the exhaust funnel.
4. Check that compressed air is available.
5. Check that there is necessary air supply to the incinerator room.
6. Check direction of rotation of primary air blower by starting the incinerator for a short period. Correct direction indicated with arrow on the blower.
7. Check the pressure in the combustion chamber by starting the incinerator for a short period. If no vacuum is obtained, adjust the damper in the flue gas mixing chamber.
   See also instruction for trouble shooting.

SET POINT FOR TIMERS

Combustion air failure shut down delay	12 sec.	(7K4)
Low negative pressure failure shut down delay	30 sec	(7K7)
Pre purge incinerator start(Burner pre purge)	30 sec	(9K5)
Period of time between 'supply atomizing air and sludge'	22 sec	
Stop diesel oil supply ST-1 when burning sludge	20 sec	(13K2)
Preheating combustion chamber	25 sec	(13K9)
Before sludge combustion during first time start-up	800 sec.	(9K8)
Alarm inside door not closed	12 sec	(15K3)
Sluice in action operating time	3 sec	(15K9)

SET POINT TEMPERATURE REGULATOR

Primary combustion chamber (5A2)	Max. 950℃	Min. 850℃
High flue gas (4K7)	Max. 350℃	Min. 300℃
Ash door	Max 145℃	Min. 100℃

COMPRESSED AIR PRESSURE

TR :	1.5 - 2.0 bar
POV 1 :	3.0 - 6.0 bar

COMBUSTION AIR PRESSURE

PS-1: 18 mbar

NEGATIVE PRESSURE COMBUSTION CHAMBER

PS-2: 0.5 mbar

DIESEL OIL PRESSURE

ST-1 7 - 16 bar

ATTENDANCE OF PRIMARY COMBUSTION CHAMBER

It is recommended to feed small bags with e.g. 8 kg per bag into the incinerator, as this will reduce the pollution.

STOP OF INCINERATOR

When stopping the incinerator, please remember to:

1 Activate the switch for 'incinerator - stop' on the control panel and the incinerator will automatically switch to cooling program.

2. When the combustion chamber temperature gets below 100℃ the cooling program will automatically stop.

3. When the incinerator has stopped, switch off the main switch on the control panel.

4. NEVER STOP THE INCINERATOR ON THE MAIN SWITCH DURING OPERATION AS THIS WILL CAUSE MELT DOWN OF TOP MOUNTED BURNERS.

Part 4
TROUBLE SHOOTING CHART

TROUBLE SHOOTING- CHART
HYUNDAI-ATLAS INCINERATOR
TYPE MAXI 50/100/150 SL-1 WS

The following trouble shooting chart is by no means complete, but covers the more general type of problems, which would most likely occur if a breakdown is experienced.

NOTE

All incinerators have been tested in HYUNDAI workshop, and the below dampers and air nozzles have been pre-adjusted for the funnel in our test bed. After installation of the incinerator it is therefore necessary to make a final adjustment of these items based on the actual funnel/draught conditions.

ADJUSTMENT OF DAMPER

The damper of the exhaust gas funnel is to be completely open. This damper is only used, if there is too much 'draught' in the funnel, like for instance if the negative pressure in the combustion chamber drops below -60 mmAq.

The negative pressure has to be controlled by the U-tube with water (UM).

ADJUSTMENT OF BURNER

If the temperature in the primary combustion chamber does not reach 700℃ within 20-30 minutes, a thing which can occur when the vessel is placed in cold areas, the oil pressure to the burner must either be raised or alternatively a nozzle with a larger capacity must be installed.

TROUBLE	POSSIBLE CAUSE	CORRECTIVE ACTION SUGGESTED
1. Flame failure (Red alarm lamp) Incinerator running on cooling program	A. No diesel oil to the Primary burner	A. Check the level in diesel oil tank
	B. The oil filter in diesel Oil pump or pipe line is Blocked	B. Clean the filter
	C. The flame detector is Sooted up	C. Clean the flame Detector glass carefully
	D. Wrong adjustment of Ignition electrodes	D. Adjust the electrodes
	E. Oil nozzle of the primary burner blocked up.	E. Clean the filter in The oil nozzle or change the nozzle
	F. Wrong adjustment of air damper of the primary burner (excessive air supply)	F. Reduce supply by adjusting damper
	G. Check all connection plug of the sol. valve motors	G. Tighten connection plug.
	H. Not running the impeller of the primary burner fan by the blocking	H. Disassemble and remove the blocking
	I. Wrong clean of sludge burner.	I. Disassemble and clean.
	J. Clean sludge burner of sludge line to air line unconnected.	J. Disassemble and connection. (Top connector : sludge line) (Side connector : air line)
	K. Shortage of supply combustion air. (too much soot)	K. Incinerator supply air by opening air nozzle.

TROUBLE	POSSIBLE CAUSE	CORRECTIVE ACTION SUGGESTED
	L. Supply too much sludge	L. Reduce sludge supply by adjusting handle of dosing pump
	M. The condition of sludge is bad (contained too much water etc.).	M. Running mill pump about one hour before burning In case of too much bad condition to burner mix diesel oil.
	N. Solenoid valves (MV7.8) of sludge line are not operated.	N. Check solenoid valves and piston valve.
	O. Too much oil pressure on mill pump.	O. Adjust the angle valve and set the pressure to approx. 0.5bar.
	P. Air nozzle blocked up by ash (shortage of combustion air)	P. Remove ash around air nozzle.
	Q. Solenoid valve (MV4) of atomizing air line is not operated.	Q. Check the solenoid valve.
2.High temperature Incinerator (Red Alarm lamp) Incinerator running On cooling program.	A. The Thermocouple TC-1 Has been interrupted	A. Replace the thermocouple and check the cable connection
	B. Too high oil pressure On diesel oil pump PU-1	B. Re-adjust the oil pump Pressure
	C. Burning of solid waste With abnormal heat value	C. Reset when the temperature is below the minimum temp. set point
	D. Combustion of too Much sludge.	D. Adjust the sludge admission on dosing pump (PU-3)
	E. Combustion of too much solid waste.	E. Off the incinerator-start switch (Incinerator running on cooling program)

TROUBLE	POSSIBLE CAUSE	CORRECTIVE ACTION SUGGESTED
3. Low pressure combustion chamber air (Red alarm lamp) incinerator running on cooling program	A. Wrong adjustment pressure switch (PS-1). B. Blocking of air inlet primary blower	A. Re-adjust the pressure switch to 18 mbar with a screwdriver on adjustment screw. B. Remove the blocking
4. Over load of motor (Red alarm lamp) Incinerator running on cooling program	A. The motor thermal over load protector is switch off. B. The automatic fuse is switched off. C. Faults in the control panel poor contact.	A. Search the reason for the switch off. Reset the automatic fuse. B. Search the reason for the switch off. Reset the automatic fuse. C. Check cable connections and connectors in the control panel.
5. Low negative pressure combustion chamber (Red alarm lamp) incinerator running on cooling program	A. No vacuum B. Wrong adjustment of pressure switch (PS-2)	A. Close the air nozzle in combustion chamber. B. Re-adjust pressure switch to 0.5mbar.

TROUBLE	POSSIBLE CAUSE	CORRECTIVE ACTION SUGGESTED
6. High temperature exhaust gas (Red alarm lamp) Incinerator running on cooling program	A. The thermocouple TC-2 has been Interrupted. B. Burning of solid waste With abnormal heat Value. C. Combustion of too much sludge	A. Replace the thermocouple and check the cable connection. (+,-) B. Reset. D. Reduce sludge supply by adjusting handle of dosing pump.
7. Low atomizing air pressure. (Red alarm lamp) Incinerator running on cooling program	A. Low supply air pressure (Approx. 2 bar is normal setting point).	A. Check the air line . (pipe and valve) Check the air line from compressor.
8. Low atomizing air pressure. (Red alarm lamp) Incinerator running on cooling program	A. Low air pressure. B. Air cylinder has been interrupted. C. Wrong setting of timers in control panel (CP-1) D. Blocking the door or air cylinder.	A. Check the air line. B. Replace the air cylinder. C. Reset the timers. (Door open : 3sec) (Delay door open alarm : 30sec) D. Remove the blocking.

TROUBLE SHOOTING- CHART
W.O. DOSING PUMP (PU-3)

Breakdown											
pump has no suction	pump conveys irregularly	the conveying capacity is not achieved	pressure is not achieved	pump does not start	pump has siezed or has stopped conveying	pump operates noisily	motor overheats	the stator wears out early	shaft sealing leaks		**Atlas** progressive cavity pumps will operate trouble-free, if they are used in accordance with our data sheets and operating and maintenance instructions:
1	2	3	4	5	6	7	8	9	10		Reasons / Remedies
				●			●			a	Adhesion between rotor and stator excessive (as delivered). Lubricate (soft soap, genuine soap) between stator and rotor. Then turn the pump by means of the tool W2.
●										b	Check rotational direction of the pump per data sheet and nameplate. In case of wrong direction, change wiring of motor.
●	●	●			●	●				c	Suction pipe or shaft sealing leak.
●	●	●				●				d	Suction head too high (item 6.5.3.1). Check suction head with vacuum gauge. Increase the suction pipe diameter and fit larger filters. Open the suction valve.
●	●	●								e	Viscosity of the liquid too high. Check and accommodate per data sheet.
		●		●			●			f	Wrong pump speed. Correct pump speed as per data sheet.
	●	●								g	Avoid inclusions of air in the conveying liquid.
		●		●	●		●	●		h	Pressure head too high (point 6.5.3.2). Check pressure head with manometer. Reduce the pressure head by increasing the pressure pipe diameter or by shortening the pressure pipe.
●	●	●			●			●		i	Pump runs partially or completely dry (point 6.5.2). Check flow in the suction chamber. Install dry running protection TSE.
						●	●			j	Check coupling, possibly pump shaft is misaligned to drive. Check whether coupling gear is worn. Realign coupling. The coupling gear may have to be replaced.
●		●								k	Speed to low. Increase the speed when high suction performances are required and when the liquid is very thin.
●	●					●				l	Speed too high. Reduce the speed when pumping products with high viscosities - danger of cavitation.
						●				m	Check the axial play in the coupling linkage. Check that the bush has been installed correctly. (see document OM.PJT. Item 2.2)
●		●		●	●			●		n	Check for foreign substances in the pump. Dismantle the pump, remove foreign substances and replace worn parts.
●		●	●		●					o	Stator or rotor worn. Dismantle the pump and replace defective parts.
●		●			●	●				p	Joint parts worn. Replace worn parts and fill with special pin joint grease.
●		●			●			●		q	Suction pipework partially or completely blocked. Clean suction pipework.
●				●	●		●	●		r	Temperature of the pumping liquid too high. Excessive expansion of the stator. Check temperature and install rotor with diameter smaller than specified.
●		●		●			●		●	s	Gland packing too strongly tightened or worn. Ease or tighten stuffing box. Replace defective packing rings.
●				●	●			●		t	Solid contents and / or size of solids too large. Reduce pump speed and install perhaps a screen with suitable meshes. Increase fluid share.
●				●				●	●	u	When the pump is non-operational, the solids settle out and become hard. Clear and flush pump immediately.
●				●	●			●	●	v	The liquid becomes hard when the temperature falls below a certain limit. Heat the pump.
						●			●	w	The bearing in the drive casing of the pump, or in the drive engine is defective. Repalce bearing.
									●	x	Mechanical seal defective. Check seall faces and O-rings. If necessary replace corresponding defective parts.

Part 5
INSTRUCTION FOR OPERATION AND MAINTENANCE OF PARTS

OPERATING INSTRUCTIONS

FOR

DIGITAL TEMPERATURE CONTROLLER (5A2) – THERMO COUPLE S TYPE

SAMWON TECH

NOVA 300 SERIES
DIGITAL CONTROLLER
ST390 / 380 / 370 /360 / 340
Instruction Manual

Thank you for purchasing Samwontech production. Please use after read instruction manual for safety. Free to contact to our sales Div. for Production Inquiry and After Service.

Tel : +82-32-326-9120 FAX : +82-32-326-9119
http://www.samwontech.com E-mail : webmaster@samwontech.com

Safety Guide

The following safety symblos are used in this manual.

⚠ CAUTION If this symbol is marked on the product, the operator must investigate the explanation given in this manual to protect injury or death to personnel or damage to instrument.

⚠ CAUTION

1. Be sure to operate the controller installed on a panel to prevent electric shock.
2. Keep the input circuit wiring as far as possible away from power and ground circuit.
3. Do not mount front panel facing downward.
4. To prevent electric shock, be sure to turn off and the source circuit breaker before wiring.
5. The power consumptions are 100-240VAC, 50/60Hz, 10VAmax and operate without power switching in advance.
6. No work in wet hands(it caused electric shock)
7. Refer the way of grounding connection, however, keep away for grounding to Gas pipe, water pipe, lightening rod etc.
8. No magnetic disturbances are caused.

Control Keys and Display

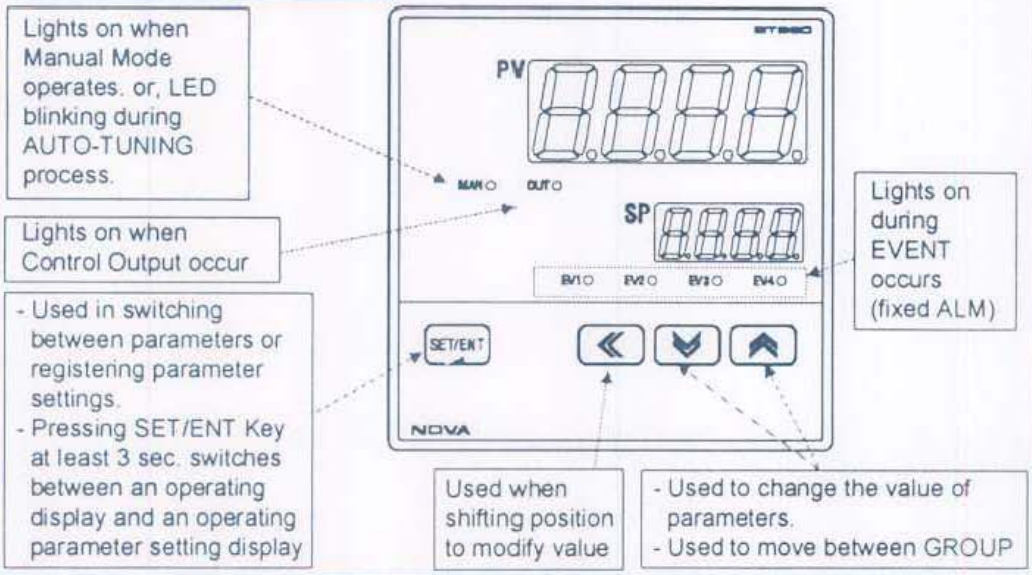

Type & Suffix Code

Model	Suffix Code	Description	Remark
ST340 / 360 / 370 / 380 / 390	- □ □	Digital Controller	
Control Output	S	SSR	
	A	AOUT(SCR)	
	R	RELAY	
Power	0	100 ~ 240VAC	
	1	24VDC	
Options	/RET	Retransmission	*note1
	/RS	RS422 / 485	*note1
	/HBA	Heater Break Alarm	*note1, *note3
	/ALM3	RELAY Output 1 Point	*note2
	/ALM4	RELAY Output 1 Point	*note1, *note2

*note1:RET, RS, HBA, ALM4 to be purchased separately *note2:It can't use at ST340,360,380
*note3 : It can't install with AOUT

Specification

- PV/SP Data Dispaly : each 4 digits
- Sampling Time : 250ms
- Indication Acuracy : ±0.2% of FS
- Running Mode : AUTO / MAN
- Control Loops and Mode : Single-Loop Control
- Number of Setpoint(SP) : 1SP(1 Zone PID)
- Retransmission Output : 4 ~ 20mADC (PV, SP, MV) or Loop power supply
- Communication Protocols : PC-Link, MODBUS(ASCII, RTU), SYNC Master, Slave
- Power Supply and Consumption : 100 ~ 240VAC, 50 ~ 60Hz / Max 6W below

Sensor
- PV Input : Universal Input(1 Point)
- Type of Input
  T/C : K, J, E, T, R, B, S, L, N, U, W, Platinel II
  RTD : Pt100, JPt100
  DCV : -10 ~ 20mV, 0 ~ 100mV, 0.4 ~ 2.0VDC, 1 ~ 5VDC, 0 ~ 10VDC
  (4 ~ 20mA, 0 ~ 20mA, with external 250Ω, 500Ω)

Output
- Control Output : 1 Point
- Time-proportional PID : Relay, SSR(V-Pulse)
  Continuous PID : SCR(4 ~ 20mADC)

Alarm
- Alarm Capacity : STD 2 Points, Max 4 Points *note4
- Alarm Type : 21 types(High/Low Temp Limit, Deviation Limit etc) *note5

HBA
- CT Spec : use CTL-6-S or 800:1 CT

*note4 : ST340, 360, 380 - Max 2 Points *note5 : In case of HBA Option - 22 Types

Safety & EMC

- Safety : EN61010-1, UL61010C-1, CAN/CSA·C22.2 No.10101-92, Category II
- EMC : EMI(Emission) - EN61326, ClassA
  EMS(Immunity) - EN61326

■ STANDARD SPECIFICATION

ST880



Special Features

- A/D Convert : 16 bit
- Variety of communication Protocols(PC Link, MODBUS)
- Retransmission Output : 14 bit
- High Accuracy(0.2%) with excellent Function
- Multi Input : T/C, RTD, DCV
- Easy Change and Setting up Parameter
- Available function to protect Over-Shoot
- 2 Points Alarm Output as Standard Option

Item			Detail
Size			48(W) × 96(D) × 100(L) mm
PV/SP Display			Each 4 Digits
Sampling Time			250ms
Accuracy			±0.2% of FS
Control Loops and Mode			Single-Loop Control
Running Mode			Auto/Manual
Number of Setpoint			1SP(1 Zone PID)
Input		Type	Universal Input (1 Point)
	Sensor	T/C	K, J, E, T, R, B, S, L, N, U, W, Platinel II
		RTD	Pt100, JPt100
		DCV	-10 – 20mV, 0 – 100mV, 0.4 – 2.0VDC, 1 – 5VDC, 0 – 10VDC (4 – 20mA, 0 – 20mA, External Resistance 250Ω, 500Ω)
Output		Output	1 Point
	Output	Time-proportional PID	Relay, SSR(V- Pulse)
		Continuous PID	SCR (4 – 20mADC)
Alarm		Capacity	Standard 2 Points
		Type	20 Types – High/Low Temp Limit, Deviation Limit etc *Note 1
Retransmission Output			4 – 20mA (PV, SP, MV) or Loop Power Supply
Communication Protocols			PC-Link, MODBUS(ASCII, RTU)
Power Supply and Consumption			100 – 240VAC, 50 – 60Hz / Max 6W below

Model	Suffix Code	Description
ST880	- □□	Digital Controller
Type	S	SSR
	A	AOUT(SCR)
	R	RELAY
Power	0	100 – 240VAC
	1	24VDC
Options	/RET	Retransmission Output
	/RS	RS422 / 485
	/HBA	Heater Breaking Alarm
Remarks		*Note 1 : In case HBA Option : 21 Types

Sam wonTech Co., Ltd

■ OPERATION FLOW FOR PRIMARY COMBUSTION CHAMBER (5A2)

NO.	Front Panel	Adjusting Key	Description
STEP 1	PV Value SP Value	Press button "SET/ENT" to change setting value SET/ENT	Press button "SET/ENT" for 5 Seconds. This is the start of setting for S-type thermo couple.
STEP 2	PV G.At SP	Press down arrow key (One time) »	Procedure of setting method for temp. setting.
	PV G.SUb SP	Press down arrow key (One time) »	
	PV G.Pld SP	Press down arrow key (One time) »	
	PV PUd SP	Press button "SET/ENT" for 0.5 Sec.. SET/ENT	
	PV G.CtL SP	Press down arrow key »	
	PV G.In SP	Press down arrow key This is setting for thermo couple »	Please set-up for TC-S
	PV G.Out SP	Press down arrow key »	
	PV G.ALn SP	Press button "SET/ENT" for 0.5 Sec.. SET/ENT	

NO.	Front Panel	Adjusting Key	Description
STEP 3	PV ALt1 SP AH.r	Press button "SET/ENT" for 0.5 Sec.. SET/ENT	Procedure of setting method for auto operating temp. (5K3–Relay 1)
	PV AL–1 SP Value	Setting the SP value (950) Figure place Up Down	Auto operating temp. setting (High) Setting : 950°C
	PV AL–1 SP 950	Press button "SET/ENT" for 0.5 Sec.. SET/ENT	Set–up SP value (950)
	PV A1db SP Value	Setting the SP value (100) Figure place Up Down	Auto operating temp. setting. (Low) Setting : 100°C (850 ~ 950°C)
	PV A1db SP 100	Press button "SET/ENT" for 0.5 Sec.. SET/ENT	Set–up SP value (100)
STEP 4	PV ALt2 SP AH.r	Press button "SET/ENT" for 0.5 Sec.. SET/ENT	Procedure of setting method for high temp. (5K5–Relay 2)

NO.	Front Panel	Adjusting Key	Description
STEP 4	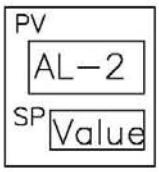	Setting the SP value (1050) Figure place Up Down	High temp. setting. Setting : 1050°C
	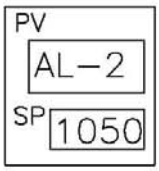	Press button "SET/ENT" for 0.5 Sec.. SET/ENT	Set-up SP value (1050)
	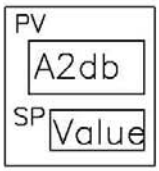	Setting the SP value (50) Figure place Up Down	High temp. setting. (Reset) Setting : 50°C
	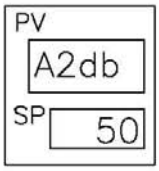	Press button "SET/ENT" for 0.5 Sec.. SET/ENT	Set-up SP value (50)
STEP 5	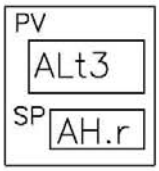	Press button "SET/ENT" for 0.5 Sec.. SET/ENT	Procedure of setting method for cooling down blower RESTART temp. (5K7-Relay 3)
	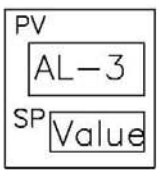	Setting the SP value (145) Figure place Up Down	Cooling down blower RESTART temp. Setting : 145°C

NO.	Front Panel	Adjusting Key	Description
STEP 5	PV AL−3 SP 145	Press button "SET/ENT" for 0.5 Sec.. SET/ENT	Set−up SP value (145)
	PV A3db SP Value	Setting the SP value (45) Figure place Up Down	Cooling down blower STOP Setting : 45 °C
	PV A3db SP 45	Press button "SET/ENT" for 0.5 Sec.. SET/ENT	Set−up SP value (45)
STEP 6	PV ALt4 SP AH.F	Press button "SET/ENT" to stop setting. SET/ENT	Press button "SET/ENT" for 5 Seconds. This is the stop of setting for S−type thermo couple.

■ WIRING

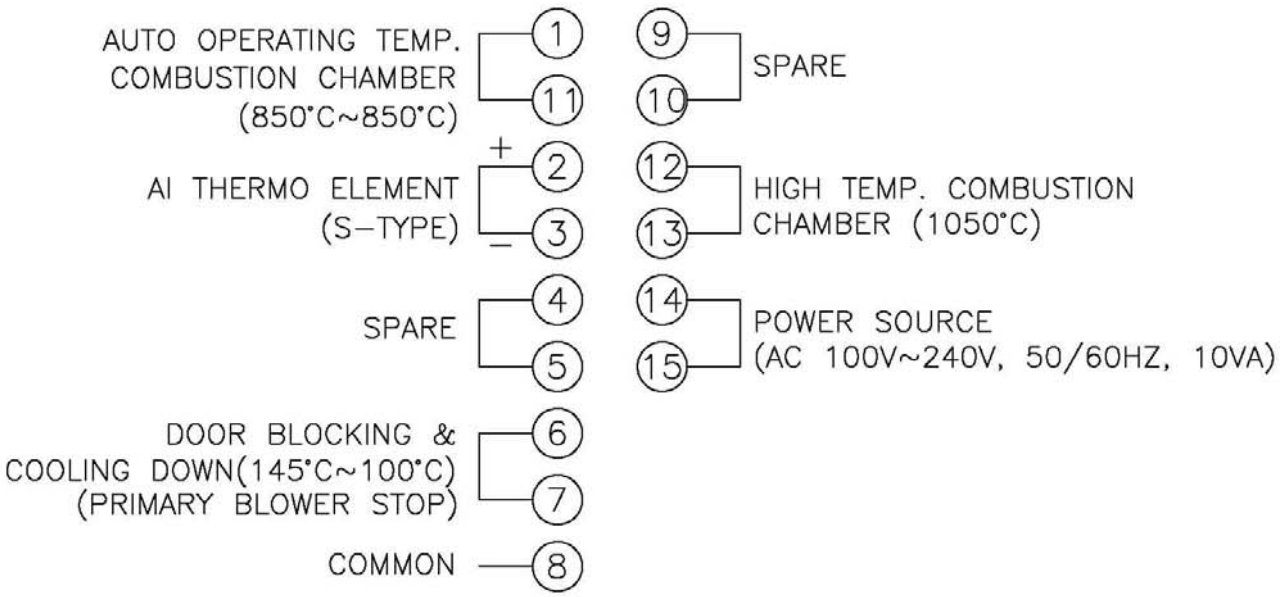

OPERATING INSTRUCTIONS
FOR
FLUE GAS TEMP. CONTROL(TC-2)-THERMO COUPLE : PT 100Ω

Autonics

TEMPERATURE CONTROLLER
TZ4ST/TZ4SP SERIES
MANUAL

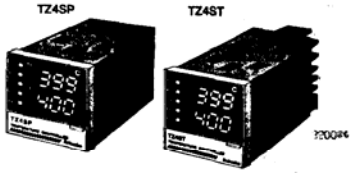

Thanks you very much for selecting Autonics products.
Please read this manual carefully before you use this unit.

Part name

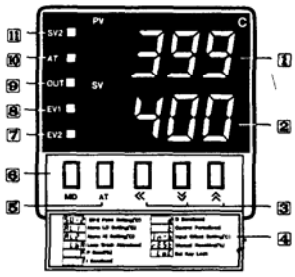

1. PV:Processing value indicator(Red color)
2. SV:Setting value indicator(Green color)
3. ≪ ≫ ∧:Key shifting the display.
4. Information for operation mode.
5. AT Key:The mode key to execute Auto tuning function.
6. MD Key:The mode key to change the items to be set, such as alarm value, etc.
7. EV2:EVENT2 Output signal lamp.
8. EV1:EVENT1 Output signal lamp.
9. OUT:Output signal lamp.
10. AT:The signal lamp flickers while Auto tuning is being executed.
11. SV2:Signal lamp for SV2 operation.

Specification

Model	TZ4SP	TZ4ST
Power supply	100 to 240VAC 50-60Hz	
Operating voltage range	90 to 110% of rated voltage	
Power consumption	About 5VA	
Display method	7Segment LED display【processing value(PV):red color, setting value(SV):green color】	
Input sensor	Thermocouple:K(CA), J(IC), R(PR), E(CR), T(CC), S(PP), N(NN), W(TT)(tolerance outer resistive is 10Ω)	
	RTD:DIN Pt100Ω, JIS Pt100Ω, (3 wires type, tolerance of outer resistive is 5Ω per a wire)	
	Voltage:1 to 5VDC, 0 to 10VDC, Current:DC4 to 20mA	
Control method	ON/OFF Control(Hysteresis:1 to 100℃ adjustable)	
	P, PI, PD, PIDF, PIDS	
Control output	Relay output:250VAC 3A SPDT(1c)	
	SSR output:12VDC ±2V 30mA Max.	
	Current output:DC4 to 20mA(load : Max. 600Ω)	
Retransmission output	PV value : DC4 to 20mA(load : Max. 600Ω)	
Sub output	EVENT1 output:Relay output 250VAC 1A SPST(1a)	EVENT1,2 output:Relay output 250VAC 1A SPST(1a)
Indicating accuracy	±0.3% based on SV or 3℃ Max.	
Setting accuracy	Setting by front push buttons	
Hysteresis	Adjustable 1 to 100(0.1 to 100.0)℃ at ON / OFF control action	
Proportional band(P)	0 to 100%	
Integral time(I)	0 to 3600sec.	
Derivative time(D)	0 to 3600sec.	
Control period(T)	1 to 120sec.	
Sampling time	0.5sec.	
LBA setting time	1 to 999sec.	
RAMP setting time	Ramp up, Ramp down at 1 to 99 minute	
Dielectric strength	2000VAC for 1min. Between power circuit and external sensor power.	
Mechanical durability	5 to 55Hz 0.5mm double amplitude at X, Y, Z directions for 2 hour	
Insulation resistance	Min. 100MΩ(500VDC)	
Noise	±2KV R Phase & S Phase 1㎲	
Memory retention	10 years(by EEPROM)	
Ambient operating temperature	-10 to 50℃(at non-freezing status)	
Ambient storage temperature	-20 to 60℃(at non-freezing status)	
Ambient humidity	35 to 85% RH	
Weight	About 136g	

※The weight of above chart is net weight.

Ordering information

TZ	4	ST	—	1	4	R
①	②	③		④	⑤	⑥

⑥ Control output

R	Relay output
S	SSR output
C	Current output

⑤ Power supply

4	100 to 240VAC 50-60Hz

④ Sub output

1	EVENT1 output
2	EVENT1+EVENT2 output(TZ4ST only)

③ Size

SP	DIN W48mm×H48mm plug type
ST	DIN W48×H48 terminal type

② Digit

4	4 Digit

① Item

TZ	PID TEMPERATURE

※There is no EVENT2 output in TZ4SP(Plug Type)
※Retransmission output is not applied in TZ4SP(Plug Type), TZ4ST(Terminal Type)

※The above specifications are changeable without notice anytime.

Input range for the sensor

Input sensor	Display	Selectable temperature range ℃	Selectable temperature range ℉
K(CA)H	KCAH	-100 to 1300℃	-148 to 2372℉
K(CA)L	KCAL	-100.0 to 999.9℃	Non-indication
J(IC)H	JICH	0 to 800℃	32 to 1472℉
J(IC)L	JICL	0.0 to 800.0℃	Non-indication
R(PR)	r Pr	0 to 1700℃	32 to 3092℉
E(CR)H	ECrH	0 to 800℃	32 to 1472℉
E(CR)L	ECrL	0.0 to 800.0℃	Non-indication
T(CC)H	tCCH	-200 to 400℃	-328 to 752℉
T(CC)L	tCCL	-199.9 to 400.0℃	Non-indication
S(PR)	S Pr	0 to 1700℃	32 to 3092℉
N(NN)	n nn	0 to 1300℃	32 to 2372℉
W(TT)	W tt	0 to 2300℃	32 to 4172℉
JPtH	JPtH	0 to 500℃	32 to 932℉
JPtL	JPtL	-199.9 to 199.9℃	-199.9 to 392.0℉
DPtH	dPtH	0 to 500℃	32 to 932℉
DPtL	dPtL	-199.9 to 199.9℃	-199.9 to 392.0℉
DC0 to 10V	A--1	-1999 to 9999℃	-1999 to 9999℉
DC1 to 5V	A--2	-1999 to 9999℃	-1999 to 9999℉
DC4 to 20mA	A--3	-1999 to 9999℃	-1999 to 9999℉

How to select the switch for each input sensor

※Please select the inner switch of the controller for each the temperature sensor as follow.

A)In case of thermocouples(K(CA), J(IC), R(PR), E(CR), T(CC)), S(PP), N(NN), W(TT))
S/W1  S/W2  S/W1: 1 S/W2: V

B)In case of RTD(DPtL, DPtH, JPtL, JPtH)
S/W1  S/W2  S/W1: 1 S/W2: V

C)In case of voltage input(1 to 5VDC, 0 to 10VDC)
S/W1  S/W2  S/W1: 2 S/W2: V

D)In case of current input(DC4 to 20mA)
S/W1  S/W2  S/W1: 2 S/W2: A

■ Alarm output

This unit provides 1 or 2 alarm output except the control output according to model. This alarm output is relay output and operates regardless to the control output.

- Alarm output operates when higher or lower temperature than alarm setting value.
- 1 alarm mode can be selected among 7 kinds of alarm mode in EV-1 and EV-2 indicated in second flow chart.
- Please note below "Operation chart for alarm output" & "Option of alarm output" regard to detailed operation and optional operation.

■ Operation chart for alarm output

AL-0	——	No aralm output.
AL-1	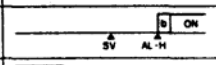	■Deviation high-limit: Output turns on when deviation between PV value and SV value is accured higher than setting value of AL-H.
AL-2	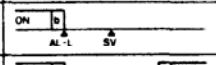	■Deviation low-limit Output turns on when deviation between PV value and SV value is accured lower than setting value of AL-L.
AL-3	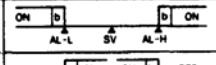	■Deviation high/low-limit: Output turns on when deviation between PV value and SV value is accured higher than setting value of AL-H, AL-L.
AL-4	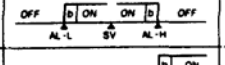	■Reverse deviation high/low-limit: Output turns off when deviation between PV value and SV value is accured higher than setting value of AL-H, AL-L.
AL-5	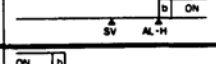	■The absolute value high-limit Output turns on when PV value is higher than value of AL-H or same value(PV ≧ AL-H)
AL-6	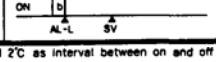	■The absolute value low-limit Output turns on when PV value is lower than value of AL-L or same value(PV ≧ AL-L)

※ "b" means fixed 2℃ as interval between on and off when alarm output is operating.

■ Option of alarm output

Mode	Action name	function
AL-A	General alarm	No optional alarm output.
AL-b	Latch function	When alarm output turns on once, its turn-on condition is latched.
AL-C	Standby sequency function	The alarm output is not turned on when PV value is reached at output condition first, it turns on when the PV value is deviated from output condition or when it is reached at the output condition again.
AL-d	Latch & Standby sequency function	It is applied latch & standby sequency function together.

■ Auto tuning operation

PID Auto tuning function is automatically to measure thermal characteristics and response of the control object and then to execute its value under high response & stability after calculating the time constant of PID required to control optimum temperature.

- Execute the Auto tuning function at initial time after connecting the controller & the sensor.
- Execution of Auto tuning is started when it is press AT key for 3sec. more.
- While the Auto tuning function is executing, AT LED on the front panel flashes.when execution of auto tuning is finished, AT LED turns off.
- While the auto tuning function is executing, it is stopped as pressing AT key for 5sec. more.
- When the power turns off or the stop signal is applied while auto tuning function is executing, time constant of PID is not changed and is memorized the value before power turns off.
- Time constant of PID selected by Auto tuning function can be changed with certain time constant by manual reset accroding to explaination of first flow chart for the setting mode.
- Execute the Auto tuning function again periodically, because the thermal characteristics for the control object can be changed when the controller is used continuously during long time.

■ Sub output(EVENT) function

This unit provides 1 sub output basically in the unit except the control output or 2 sub output according to model.

- This sub output is relay "A" contact output.
- 1 or 2 sub mode can be selected among 7 kinds of alarm mode or LBA operated when the heater line is cut, SBA operated when the sensor line is cut.
  - There are function holding on status and function returning automatically according to alarm option mode in case of selecting alarm mode.
  - When the sensor line or the heater line cut off, SBA or LBA output turns on. This "output on" status must be return as the power turns off.
- Band width between on and off is fixed as 2℃ in case of selecting alarm mode.
  Ex)When alarm set temperature is 200℃, the output turns on when PV reach from 1002℃ to 200℃. In the case, the output turns on at over 200℃, the output turns off at over 198℃.
  (This width band can not change.)
- Sub output mode selects in second flow chart, setting value for sub output sets in first flow chart.

■ Loop break alarm(LBA)

LBA function is to diagnose an abnormal temperature of the control object. If the temperature of the control object is changed within ±2℃ during setting time of LBA, the LBA output turns on.

- LBA output can be selected at EV-1, EV-2 of the second flow chart.
- If LBA output is not selected at event output, it can not applied in the controller.
- Setting range of LBA output is 1 to 999sec.
- If thermal response of the control object is slow, the setting value of LBA must be set with large value.
- LBA output turns on when the manipulated variable of the controller is 0% and 100%.
- In case the LBA output turns on, please take care as follow:
  ①Short-circuit or cutting of the temp. sensor.
  ②Abnormal condition of the equipment(conductor, sub-relay, etc.)
  ③Abnormal condition of the load(heating, cooling)
  ④Wrong-wiring or cutting of the other cables.

■ Sensor break alarm(SBA)

This function is that the sub output turns on when the sensor line cuts off in first or on using this unit.
It can easy check that the sensor line cuts off or not as operating the buzzer by outer a relay contact.

- Set SBA mode EVENT1 or EVENT2 mode in second flow chart.
- If SBA output turns on by problems of the sensor line, the output does not return even if sensor line is wired correctly, in this case, turns on the power again after turning off the power.

■ Error indicator

If error is occurred while the controller is operating, it will be indicated as follow.

- "LLLL" is flashing when measured PV value is lower than input range of the sensor.
- "HHHH" is flashing when measured PV value is higher than input range of the sensor.
- "oPEn" is flashing when the input sensor is not connected or its wire is cut.

■ ON/OFF control

ON/OFF control action, called 2 position control is that the output turns on when PV falls lower than SV and the output turns off when PV reaches at SV.

- ON/OFF control operates as setting 0.0 value in P position of first flow chart.
- There is regular interval time between ON and OFF in ON/OFF control, If interval time is too short, the hunting(chartering) can be occurred by noise.
  Interval time can be set in HIS position of first flow chart.
  Setting range is 1 to 100(or 0.1 to 100.0)
- HIS indicates when value of P position in first flow chart is "0", HIS do not indicate when value of P position is not "0"
- This ON/OFF control can be applied in the equipment(Cooling compressor) to be controlled which error can occur by frequent ON/OFF action.
- Even if ON/OFF control is stable status, the hunting can be occurred by setting value in HIS or capacity of the heater or reponse characteristic of the equipment to be controlled or installing position of the sensor.
  Please consider above points to minimize the hunting when designs the system.

■ Second flow chart

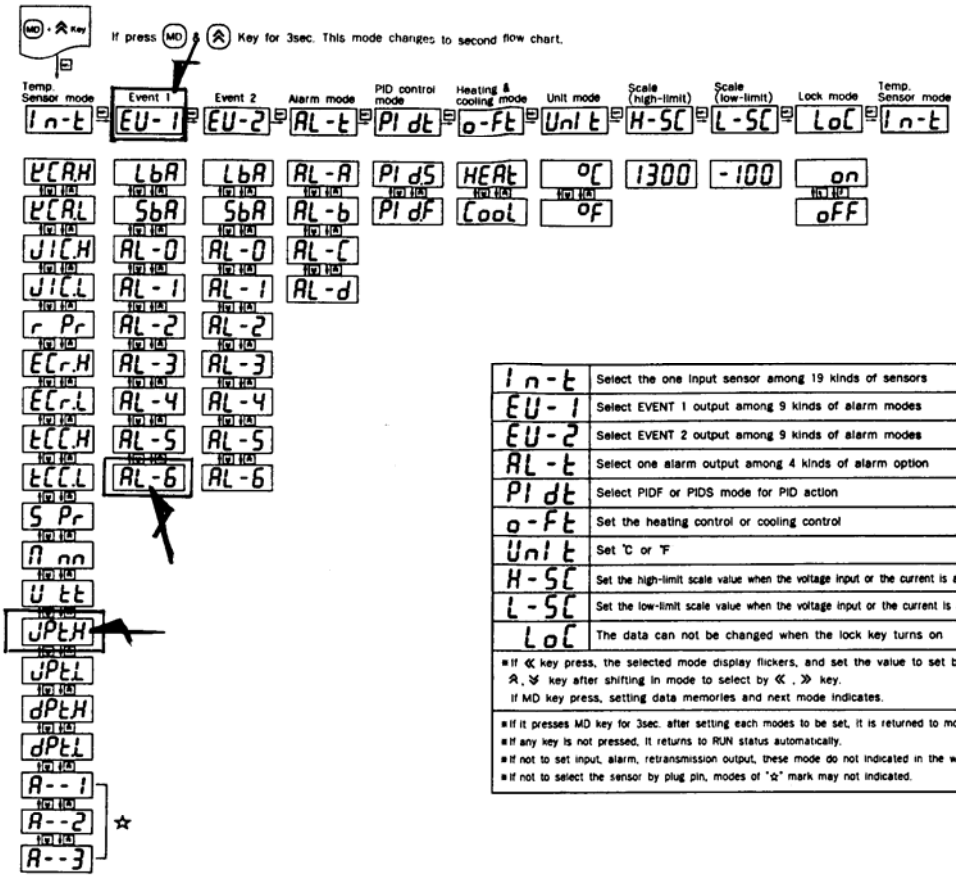

In-t	Select the one input sensor among 19 kinds of sensors
EU-1	Select EVENT 1 output among 9 kinds of alarm modes
EU-2	Select EVENT 2 output among 9 kinds of alarm modes
AL-t	Select one alarm output among 4 kinds of alarm option
PIdt	Select PIDF or PIDS mode for PID action
o-Ft	Set the heating control or cooling control
Unit	Set ℃ or ℉
H-SC	Set the high-limit scale value when the voltage input or the current is applied
L-SC	Set the low-limit scale value when the voltage input or the current is applied
LoC	The data can not be changed when the lock key turns on

- If ≪ key press, the selected mode display flickers, and set the value to set by ≫, ≪ key after shifting in mode to select by ≪ , ≫ key. If MD key press, setting data memories and next mode indicates.
- If it presses MD key for 3sec. after setting each modes to be set, it is returned to mode.
- If any key is not pressed, it returns to RUN status automatically.
- If not to set input, alarm, retransmission output, these mode do not indicated in the window.
- If not to select the sensor by plug pin, modes of "☆" mark may not indicated.

■ First flow chart

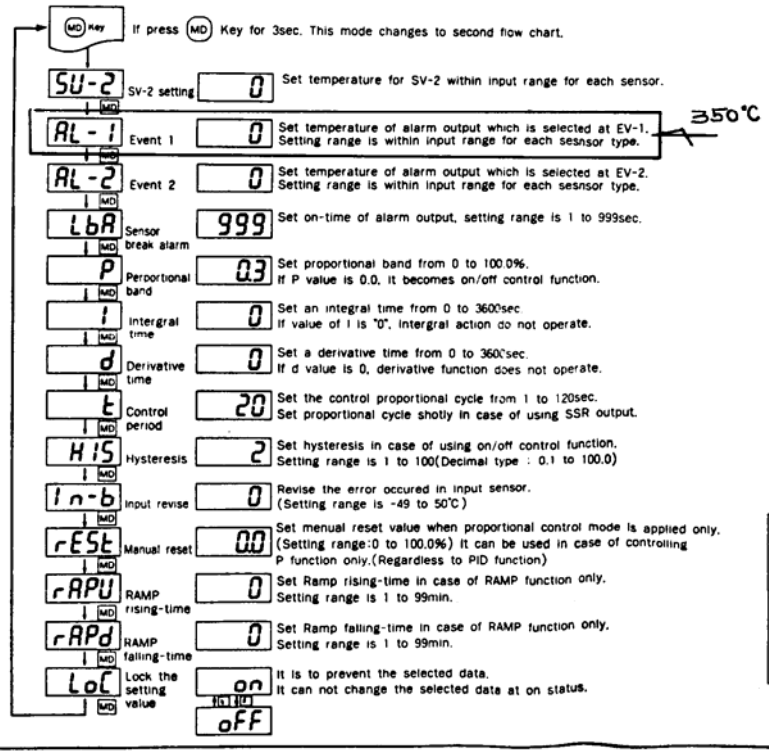

How to shift the mode.
- If ≪ key press, the selected mode display flickers, and set the value to set by ≫, ≪ key after shifting in mode to select by ≪ , ≫ key. If MD key press, setting data memories and next mode indicates.
- It returns to RUN status in case of press MD key for 3sec. After setting all mode to change.
- If any key is not pressed, it returns to RUN status automatically.
- If not to set related mode in second flow chart, EVENT1, EVENT2, LbA, I, d, t, HIS, RaPu, rAPu, rAPd do not indicated in the window.

▣ Dual PID control function

There are 2 kinds of PID actions at TZ series.
The one is that PV is reached at SV as fast response speed, but a little of overshoot is occurred(Drawing 1), the other is that PV is reached at SV as slow response speed, but overshoot is minimized(Drawing 2).

(Drawing 1)

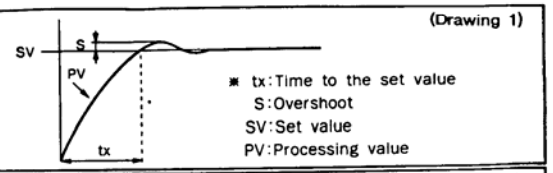

(Drawing 2)

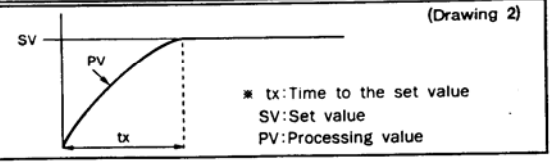

- TZ series has fast response PID action & slow response PID action, you can select PIDF & PIDS by front push buttons accroding to the application.
- PIDF & PIDS mode of dual PID action can be selected at the secound flow chart for setting mode.
- PIDF(fast response PID action)
  This mode is applied at the machines or systems which are required fast response speed, but allowable a little of overshoot.
  ex)Machines which must be applied preliminary heat before it operates
  ※injection machine, an electric furnace, etc.
- PIDS(Slow response PID action)
  This mode is applied at the machine which overshoot must not be occurred, because the fire can be occurred by overshoot of the controller
  ※plating mechine to control temperature, oiling system to control temperature of oil, etc.
- TZ series is fixed as PIDF mode before making shipments.

▣ Manual reset

Proportional control has offset because rising time is not same with falling time, even if the unit operates normally.
Manual reset function is used at proportional control mode only.

- Manual reset funcion is used at proportional control mode only.
- Manual reset function operates in case of setting rESt.
- When PV and SV is same, proportional band is 50%, when PV is lower than SV, rESt% value sets over 50% value PV is larger than SV, rESt value sets under 50% value.

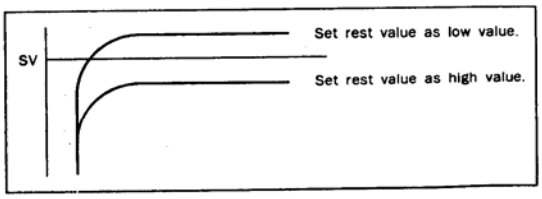

▣ Main control output

There are 3 kinds of main output in this such as relay output, SSR output, current(4 to 20mA), but this unit has one main output only. Therfore please select one main output in ordering information according to your application.

- Relay outcut rated 250VAC 3A is indicated as "R"
- SSR output rated DC 12V ±2V is indicated "S", the load of over 30mA can not use.
- Current output rated 4 to 20mA is indicated as "C", resistive load is 600Ω.
  (Note)DC4 to 20mA current output is different from DC4 to 20mA retransmission output.
  TZ4ST/SP series has no retransmission output.

▣ Relay output

Relay output is to hear or cool temperature of the load continuosly by turning on and off repeatedly by the unit's inner relay contact.
The load must be controlled by magnet switch, power relay, etc.
Operated by inner relay contact of the unit.

- Please use this unit within rated relay specification, because a cause of fire may occur by damage of the relay contact of the unit.
- Do not to flow a electromotive force occurred from a coil of magnet switch & power relay in the unit.
  Because the unit may malfunction or damage.
- Electrical and mechanical life cycle of inner relay is indicated in a manual. Please design the system after checking this life cycle.
  If it set "t" time long in first flow chart, relay life cycle is extended. In case of setting "t" time shortly because of response characteristic of the heater, be sure to use SSR output.

▣ Voltage pulse(SSR) output

This output is to control outer SSR(Solid state relay). If the relat life cycle is limited, but SSR life cycle is semi-permanent.

- SSR output is 12DCV, it can be use the load to Max 30mA.
- SSR output can be control as high speed response. therefore it can be got a godd control condition in case of setting the control cycle(t) shortly(1 or 2sec.)
- Radiation is important to SSR which composed of the semiconductor relay. Please use it within rated Max. 80% because of a cause of fire by damage of SSR.

▣ Current output(DC4 to 20mA)

This output, called analogue output is to control the tranducer (SCR unit), it can proceed safe control because there is no a sudden change.
It outputs 4 to 20mA, operating value is 100% at 20mA, 0% at 4mA.

- It is used with transducer and can be used as the other application.
- This output operates through inner separated a constant current-circuit. Therfore current output is not changed even if the resistive load is connected in outside, but if resistive load is too large value(over 600Ω), the current can be changed.
  (Please use the resistive load less than 600Ω)
- Do not use a current output in case of using ON/OFF control.
- Operating value almost does not control at 100% or 0% position because of converting an analogue output form in case of using a current output. Therefore LbA mode does not use in this current output, because LbA mode as monitoring function operates at 100% or 0% position only.
- Front OUT lamp does not operates in case of using a current output.

Connection

● TZ4SP

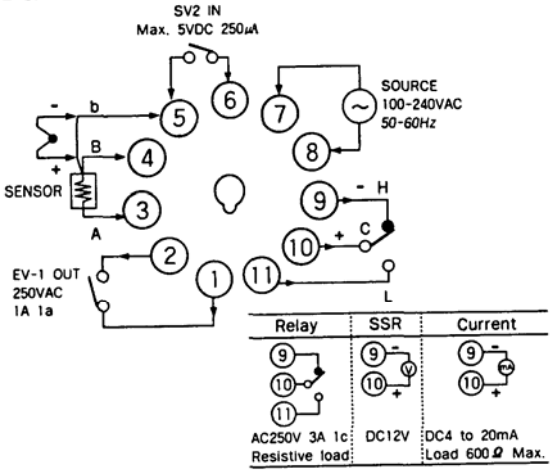

● TZ4ST

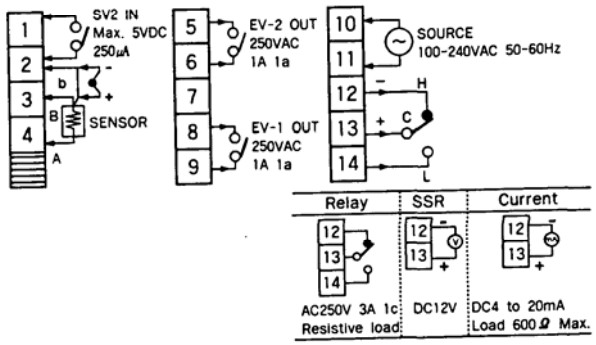

How to change the set value

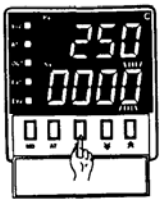

1 In case of changing the set value at status of RUN, push "≪" key.

10° digit of SV indicator will be flashed.

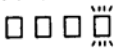

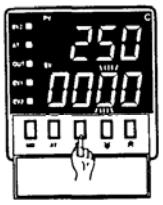

2 Push "≪" key, and then the digit will be shifted step by step.

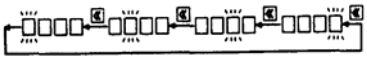

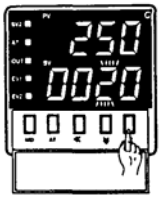

3 Push "⩔" or "⩓" at the flashing digit, and then change the set value.

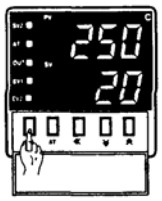

4 Push MD key after setting the set value to be changed and then flashing of the digit stops and the reset value is applied at *status of RUN.*

Fixed specification before it makes a shipment

● Second flow

Mode	Setting mode	Mode	Setting mode
In-t	ΨCA.H	o-Ft	HEAt
EU-1	AL-1	Unit	°C
EU-2	AL-2	H-SC	1300
AL-t	AL-A	L-SC	-100
PIdt	PIdS	LoC	oFF

● First flow

Mode	Setting mode	Mode	Setting mode
SU-2	0	t	20
AL-1	0	HIS	2
AL-2	0	In-b	0
LbA	600	rESt	0.0
P	3.0	rAPU	0
I	0	rAPd	0
d	0	LoC	oFF

▣ Dimension

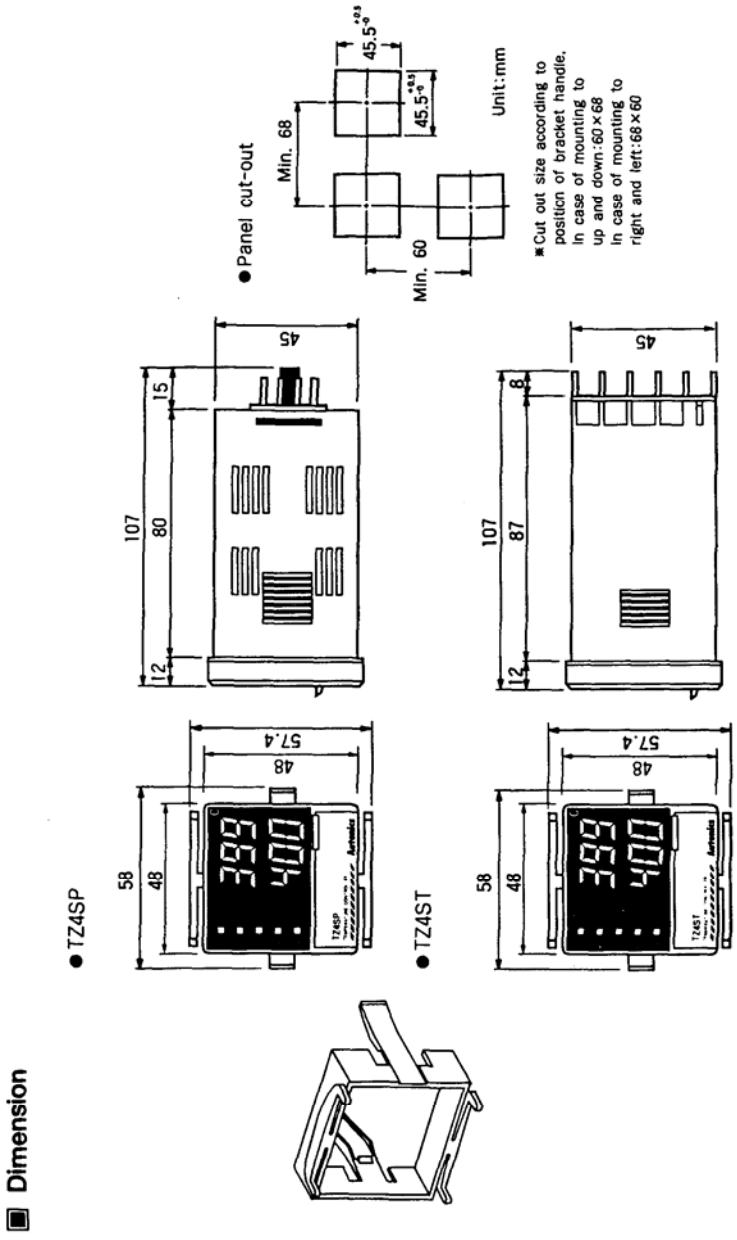
● Panel cut-out
Min. 68
Min. 60
Unit:mm
※Cut out size according to position of bracket handle.
In case of mounting to up and down:60×68
In case of mounting to right and left:68×60
● TZ4SP
● TZ4ST
45
107
80
87
15
8
12
57.4
48
58

▣ Application of Relay output type.

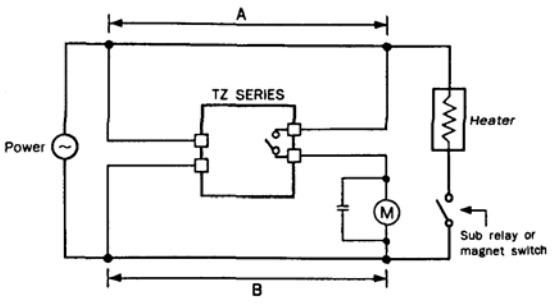

● Caution for wiring.

1. A part kepps away from B part as much as possible.
   If wiring length of A or B part is short, electromotive force occurred from a coil of magnet switch & power relay flows in power line of the unit, the unit malfunctions.
2. If wiring length of A or B part is short, please connect a condenser 104(630V) between "Ⓜ" position of the power relay to protect electromotive force.

▣ Application of SSR output type.

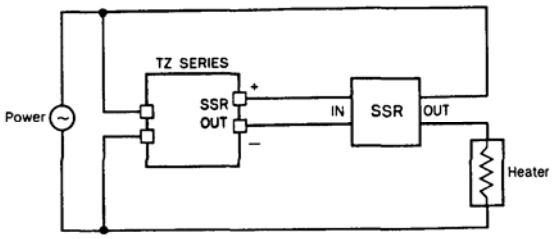

● Caution

1. Check the capacity of the load in case of using SSR output, if the capacity of the load is not enough, the inner circuit of unit can be broken and then SSR closes, therefore please use bigger capacity of the load than capacity of SSR because of a cause of fire by damage of SSR.
2. If SSR to be used applies full(100%), it must radiate a heat from SSR as 100%. In case of not mounting the radiation plate to SSR, please apply 20 to 30% capacity of SSR specified.

▣ Current output(DC4 to 20mA)

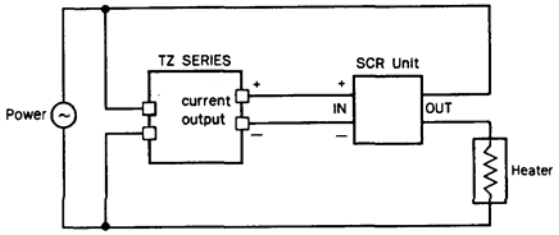

- It is important to select SCR unit after checking the capacity of the load.
- If the capacity is exceeded, it occurs a cause of fire.

▣ Analogue input

In case of measuring or controlling humidity & pressure, flux, etc, it uses required the converter which is converting the measuring value to 4 to 20mA or 1 to 5VDC or 0 to 10VDC.

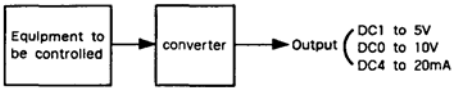

- This unit built-in the mode for the converter.
  Please select A--1(0 to 10VDC) or A--2(1 to 5VDC) or A--3(4 to 20mA) in selection mode of input in second flow chart.
- Set the input value by H-SC and L-SC mode.
- The other operation function after doing that is same as controlling the temperature.

- EX)

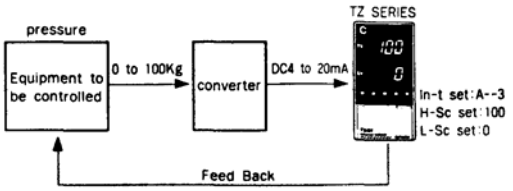

※ In case using the converter mode, please select the inner switching pin according to the chart in "How to select the switch for each input sensor"

▣ How to take out the inner body from the case.

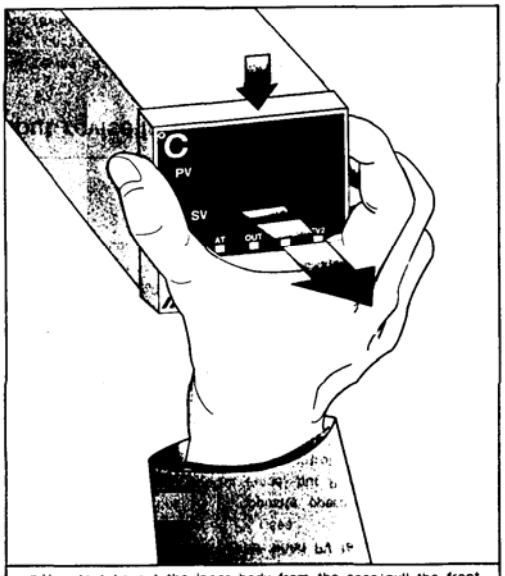

※ How to take out the inner body from the case: pull the front panel guide to forward on pushing it to down direction.

▣ How to check diagnosis simple troubles

1. In case of indicating "OPEN" in display.
When the sensor disconnects, OPEN indicates. IN this case, check disconnection of the sensor after turning off the power. If it does not disconnect, short-circuit + and - sensor input terminal after separating the sensor line from the unit and then check the display indicates indoor temperature or not.
If the unit does not indicate a indoor temperature and indicates "OPEN" continuously, the unit has some problems. In this case, please send the unit to our after service after separating the unit from system.
(But indoor temperature indicates in thermocouple mode only.

2. In case of not operating the output(the heater).
Please check operation of the OUT ramp located in front panel of the unit.
If lamp does not operate, please check the parameter of all programmed mode.
If lamp is operating, please check the output(relay, SSR, current output) after separating output line from the unit.

3. In case of indicating "ERROR" in display.
This ERROR message is indicated in case of damaging inner chip program data by outer strong noise.
In this case, please send the unit to our after service center after separating the unit from system. If a noise protection is designed in this unit as, but it does not stand up strong noise continuously. If bigger noise than specified (Max. 2KV) flows in the unit, it can be broken.

▣ Caution

⚠ DANGER(Caution, risk of electric shock)

- Electric shock:When the power is supplying, don't touch AC power terminals, because of electric shock.
- Be sure to check the power line after opening the power voltage.
- The unit(TZ series) must be isolated or disconnected from the Hazardous live voltage before acess.

⚠ CAUTION

This unit is not designed for safety device, therefore when this unit is applied at dangerous application such as serious human injury, serious property damage, be sure to install fail-safe device.

- Please use the connection-terminal(M3.5W, Max. 7.2mm) in case of connecting AC power cable.
- In case of using the socket for the unit of plug in(TZ4SP series), please use the socket which has rated 250VAC 7A and dielectric min. 2000V between terminals.
- Please make space in inner panel to disconnect the socket wired and the unit of plug in type.
- Please use the switch approved IEC947-1 or IEC947-3 to turn on or off the power voltage when this unit is installed in the panel.
- ⚠ mark indicated on the diagram of this unit means Caution - refer to accompanying documents.
- In case of cleaning the unit, please keep as following Cautions;
  -Clean dust with a dry tissue.
  -Be sure to use alcohol to clean the unit, do not use alkali acid, chromic acid, solvent, etc.
  -Be sure to clean the unit after turning off the power and then turn on the power after passing 30minute after cleaning.
- If this unit is used in a manner not to be specified by the manufacture, it can be injury to a person or damage to property.
- Be sure that metal dust and wire-dregs do not flow in the unit, because of malfunction damage of the unit or the cause of a fir.
- "~" means Alternating Current.
- Do not modify the unit or open housing of the unit, because of malfunction damage of the unit.
- Service life for the relay of the unit is indicated in this manual, life cycle is different according to the load capacity and switching times, therfore please use the unit after checking the load capacity and switching times.
  -Service life : Mechanically(Min. 10,000,000 times), Electrically (Min. 100,000 times at 250VAC 3A rresistive load.)
- Do not connect anything at non-using terminals.
- Connect wires correctly after checking polarity of terminals.
- Be sure to separate wiring the cable of this unit from high voltage or main power line to prevent the inductive noise.
- Do not this unit as following place;
  -Place dust, corrosiveness gas, oil, moisture are occurred.
  -Place there are high humidity or freezing place.
  -Place sunshine, radiant heat is occurred.
  -Place vibration, shock is occurred.
- If the equipment is used in a manner not specified by the manufacture the protection provided by the equipment may be impaired.
- The temperature controller, model TZ series, shall be installed with a switch or circuit-breaker as the means for disconnection of mains supply source as follows:
  A switch or circuit-breaker meeting the relevant requirements of IEC947-1 and IEC947-3 shall be included in equipment when the temperature controller, TZ series is built into the equipment.
  The switch or circuit-breaker shall be in close proximity to the equipment and within easy reach of the operator.
  The switch or circuit-breaker shall be marked to indicate the function of disconnection for the equipment.
- This controller model TZ series is controlled temperatures, so do not use volt meter and ampere meter.
- Environment conditions:
  The model TZ series is designed to use with the following environment conditions;
  -Altitude up to 2000m.
  -Pollution degree 2.
  -This product is intended to be indoor/outdoor use.
  -Installation category Ⅱ.
- Use the rated compensated wire when the controller is wired with thermocouple. If non-compensated wire is applied between the controller and the sensor temperature deviation will be occurred.
- Use RTD of 3 wire types. If you want to extend lead-wires, use lead wires which has resistance value as same as load wired applied. If extended lead-wirer has different resistance value against original lead-wire, temperature deviation will be occurred.
- Separate input line from power line, load line to avoid noise.
- When input line is wired at power line closely, use line filter at power line and input line must be used with shiled wire.
- Keep away from the high frequency instruments. (High frequency welding machine & sewing machine, big capacitive SCR controller)
- If you want to change the sensor, reset switches(SW1, SW2) according to each input specification. Turn on power and than set sensor mode by front keys at second flow chart.
- Each SSR output, Current output, Retransmission output is isolated with inner power line.
- Avoid to use this unit at the place where voltage & noise which is exceed the rated is occurred.
- Do not connect Hazardous Live onto terminals 1, 2, 3 and 4. The terminlas 1, 2, 3 and 4 can not be used for Hazardous Live parts.

※Above cautions must be kept because malfunction or failure of unit can be occured.

▣ Main products

■COUNTER ■TIMER ■TEMPERATURE CONTROLLER ■PANEL METER
■TACHOMETER ■LINE SPEED METER ■DISPLAY UNIT
■PROXIMITY SWITCH ■PHOTOELECTRIC SENSOR ■OPTICAL FIBER SENSOR
■ROTARY ENCODER ■SENSOR CONTROLLER

Autonics Corporation
■ HEAD QUARTER: #41-5, Yongdang-Ri, Ungsang-Up, Yangsan-Shi, Kyung-Nam, Korea 626-840.
TEL : 82-523-371-5061 FAX : 82-523-372-4432

NO990604-EP-E-03-0350D

OPERATING INSTRUCTIONS
FOR
BURNER CONTROL BOX (11A2) – LAL 2.25

LANDIS & GYR

7153 E
October 1987

oil burner controls

for atomizing burners of medium or high capacity
(intermittent operation)
Flame supervision with photoresistive detector QRB
or selenium photocell detector RAR

LAL...
Series 02

BSI REGISTERED FIRM

Quality Assurance Services
FM739, QAS34/61



Application range

The burner control units type LAL... are designed to provide control and supervision for atomizing oil burners of medium to high capacity. They are universally applicable for both multi-stage and modulating type burners, for burners of stationary direct fired air heaters (WLE according to DIN 4794), burners of flash steam generators, semi-automatically controlled burners, etc.

For special applications, e.g. for burners of incinerator plants, burner control type LAL3.25 is available. For more details refer to table on page 7 and remarks on page 6.

Types LAL... replace all types LAC... This replacement requires practically no changes with respect to the design of the burner or its casing as the dimensions of these new units are the same as those ot their predecessors. The position of the lockout reset button and that of 2 fixing holes in the baseplate **were also maintained.**

All time variants of the type LAL... have the application features described below.

Application features

1. With respect to standards:

The design and the control programme of the burner control units type LAL... are in compliance with all presently known European standards and regulations for atomizing oil burners. The units can also be applied in those countries whose safety regulations follow the European norms.

The following LAL... features **exceed the standards, thus *offering a high degree of additional safety*:**

- Detector and flame simulation test are reinstated immediately after the tolerated after-burn time. They end only on completion of the pre-purge time of the next burner start-up.
- The correct functioning of the flame supervision circuit is automatically checked during each burner start-up.
- The control contacts used for the release of fuel are tested during each post-purge time to make sure no welding has occured.
- A built-in unit fuse protects the control contacts against overload.

2. With respect to the control of the burner:

- The control units permit operation of the burner with or without post-purge.
- Fan motors with a power consumption of up to 4A (starting current max. 20A) can be connected direct.
- Separate control outputs for «Long pre-ignition (from start command)» and «Short pre-ignition» .
- Separate control outputs for «OPEN», «CLOSE» and «MIN»-travel of the air damper motor.
- Checked air damper operation to ensure that pre-purge is effected with nominal combustion air. Checked positions: «CLOSED» or «MIN» (low-flame position) at start, «OPEN» at the beginning and «MIN» after the completion of the pre-purge time. The start-up sequence is interrupted if the air damper is not run to the prescribed position.
- 2 control outputs for the release of the 2nd and, if necessary, the 3rd output stage (or the load control).
- When load control is released, the control outputs for the air damper motor are galvanically separated from the control section of the control unit.
- Connection facility for remote lockout-warning device, remote reset and remote emergency shut-down.

Types LAL2... only:

- Possibility to supervise the air pressure (including checking of the correct functioning of the air pressure switch before the start).
- Possibility of semi-automatic start-up of the burner.

3. With respect to flame supervision

- Methods of flame supervision used:

  With LAL1... and LAL2...:

  Photoresistive detector type QRB... (normal sensitivity) or type QRB...S (higher sensitivity).

  With LAL2... only:

  Selenium photocell detector type RAR... (active detector).
- The burner controls type LAL... go to lockout if flame failure occurs during operation. If, instead of this, automatic **repetition** of the start-up sequence is desired, a clearly marked wire link at the baseplate must be removed.

4. With respect to mounting and electrical installation:

- Mounting position and orientation optional (protection standard IP40)
- 24 wiring terminals
- 2 auxiliary terminals, galvanically separated, having the designations «31» and «32»
- 3 earth terminals passing over in a tongue with lug for the earthing of the burner
- 3 neutral terminals, prewired to terminal 2 which is the neutral input
- 14 knockouts for the cable entry by means of cable bushings, 8 at the sides and 6 in the floor of the baseplate
- 6 threaded knockouts at the sides for cable entry glands Pg11 and ¾" –16 UNF.

5. With respect to service:

- A lockout indicator which is coupled to the spindle of the sequence switch and which is visible in the transparent lockout reset button is provided with symbols which make it easy for service personnel to determine faults in the burner installation and also the time when they have occured.
- The design of connection socket and plug-in section make it impossible to plug in a control unit which is not permitted for the burner.
- Gas burner controls have a yellow type plate inscription, oil burner controls have **a white inscription**.

For **Design of the control units** see page 6.

* For reasons of safety (self-testing of the flame supervision circuit, etc.) at least one controlled shut-down must be provided every 24 hours.

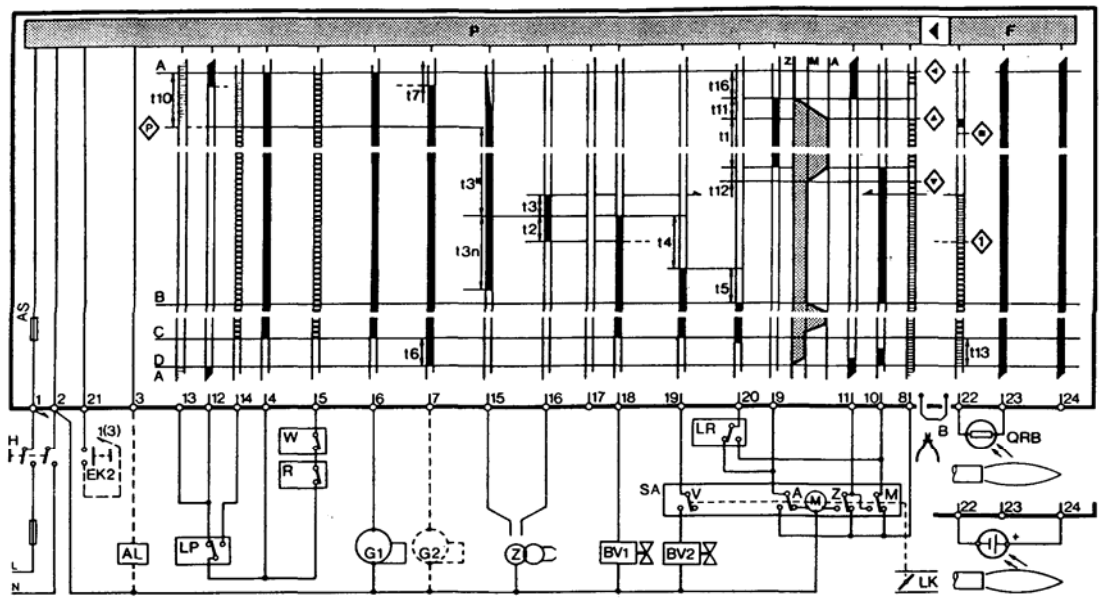

t5 **Interval.** On completion of t5 terminal 20 receives voltage and, simultaneously, control outputs 9 to 11 as well as input 8 are galvanically separated from the control section of the control unit so that the latter is protected against reverse voltages from the load control circuit.

The start-up sequence of the control unit ends with the release of the load controller «LR» at terminal 20. The sequence switch switches itself off automatically, which takes place either immediately or after some so-called «idle steps», i.e. steps without changing the contact positions.

B Operating position of the burner

B-C Burner operation (heat generation)

During burner operation the load controller runs the air damper to the nominal load or low-flame position, depending on the heat requirements. The release of the nominal load is achieved by the auxiliary switch «V» in the damper motor.

With flame failure during operation the LAL... types go to lockout. If, instead of this, **automatic repetition of the start-up sequence** is desired, a clearly marked wire link («B») at the baseplate must be removed.

C Controlled shut-down by «R»

With controlled shut-down the fuel valves are closed immediately and, simultaneously, the sequence switch starts again and programmes

t6 **Post-purge time** (post purge with fan G2 at terminal 7). Shortly after the start of the post-purge time the voltage at terminal 10 is reinstated, so that the air damper travels to the MIN position.

The complete closing of the air damper commences only shortly before the completion of the post-purge time, initiated by the control signal on terminal 11. Terminal 11 also remains under voltage during the following burner-off period.

t13 **Permissible after-burn time.** During this time the flame supervision circuit may still receive a flame signal without initiating burner lockout.

D-A End of control programme (= start position)

When, on completion of t6, the sequence switch has reset the control contacts to their start position, thereby switching itself off, the detector and flame simulation test starts again.

Voltage on terminal 4 (with LAL2... types: terminal 12) is the signal indicating that the start position has been reached.

C3

Control programme under fault conditions and lockout indication

In the event of fault conditions the sequence switch stops and simultaneously the lockout indicator. The symbol appearing above the reading mark indicates the kind of fault:

◀ **No start,** because, e.g., the CLOSE signal has not been supplied to terminal 8 by the limit switch «Z» (or the auxiliary switch «M»), or a contact has not been closed between terminals 12 and 4 or 4 and 5.

▲ **Shut down of start-up sequence,** because the OPEN signal has not been supplied to terminal 8 by the limit switch «A». Terminals 6 and 7 (with LAL1... types also terminal 15) remain under voltage until the fault is corrected.

P With LAL2... types only: **Lockout,** because the air pressure signal has not been received at the start of the air pressure check. **Any air pressure failure after this point in time also causes the control to go to lockout!**

■ **Lockout** due to a fault in the flame supervision circuit

▼ **Shut-down of start-up sequence,** because the position signal for the low-flame position has not been supplied to terminal 8 by the auxiliary switch «M». Terminals 6, 7 and 15 remain under voltage until the fault is corrected.

1 **Lockout,** because no flame signal has been received on completion of the safety time.

| **Lockout,** because the flame signal has been lost during burner operation or air pressure failure has occured.

◀ **Lockout on completion or after completion of control programme sequence** due to extraneous light (e.g. flame not extinguished, leaking fuel valves) or due to a faulty flame signal (e.g. fault in flame supervision circuit or similar)

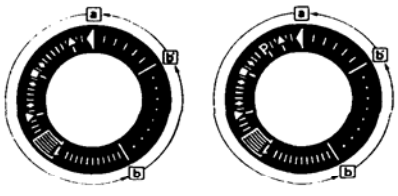

a — b
Start-up sequence
b — b'
«idle steps» up to the self shut-down of the sequence switch
b(b') — a
Post-purge sequence

When lockout occurs, the control can be reset immediately. After the resetting (and also after the correction of a fault which resulted in a controlled shut-down, or after each mains failure) the sequence switch always runs through to its start position, whereby **only** terminals 7, 9, 10 and 11 receive voltage in accordance with the control programme. It is only then that the control unit programmes a fresh burner start-up.

Note: Do not press the lockout reset button EK for more than 10 seconds

CB1 - 7153 E

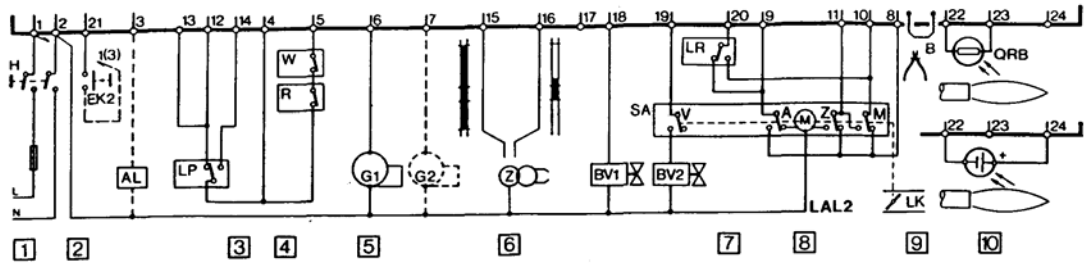

Engineering guidelines

The installation of switches, fuse, earthing etc. must be in compliance with the local safety regulations.

If any adjustment on the controls is necessary, or any wiring change has to be made, the electrical supply to the control unit must be isolated before this work is undertaken!

1 **The phase and neutral connections** may not be reversed!
Max. permissible input current: 5A continuous, peaks of max. 20A (e.g. motor starting current)
Safety limit thermostats (with hand reset, e.g. STB) are normally connected in the line.

2 **Remote reset:** When button «EK2» is connected to terminal 3, only remote reset is possible; when it is connected to terminal 1, remote emergency shut-down is also possible.

3 **Required switching capacity**
– contacts between terminals 4 and 5: 1A
– contacts between terminal 12 and «LP» (with LAL2): 1 A
– contact of the air pressure monitor «LP» (with LAL2): 5 A

4 **Check-contacts of other switching devices** in the burner installation are to be connected (in series) as follows:
To terminal 4 or 5: Contacts which must be closed from start to the controlled shut-down (otherwise no start or controlled shut-down).
To terminal 12 of the LAL2... types: Contacts which must be closed only during the start phase (otherwise no start).
To terminal 14 of the LAL2... types: Contacts which must be closed latest at the start of the pre-ignition time and which must remain closed until a controlled shut-down (otherwise lockout); this is valid for both long and short pre-ignition.

5 **Maximum loading of the control terminals** 3, 6, 7, 9, 10, 11, 15 to 20: 4A each terminal, total maximum 5A; peak currents of max. 20A (e.g. starting current of G1 or G2).

6 «Z» to terminal 15: **Long pre-ignition** t3' and post-ignition t3n.
«Z» to terminal 16: **Short pre-ignition** t3. The ignition transformer remains under voltage up to the end of the safety time t2.

7 **Connection of a fuel valve to terminal 20:** See adjacent notes and diagram.

8 **Variants of the air damper control** and guidelines for burners without air damper: See adjacent notes and diagrams.

9 **Wire link «B»:** The burner controls go to lockout if flame failure occurs during operation. If, instead of this, repetition of the start-up sequence is desired, the clearly marked wire link «B» at the baseplate must be removed (just cutting is not permitted).

10 **Maximum permissible length of the detector circuit:** See under «Technical data»

A	Limit switch for OPEN position of air damper	QRB...	Photoresistive detector
AL	Remote lockout warning device (alarm)	R	Control thermostat or pressurestat
AS	Unit fuse	RAR...	Selenium photocell detector
B	Wire link	RV	Modulating fuel valve
BV	Fuel valve	S	Fuse
d	Contactor or relay	SA	Air damper motor
EK	Lockout reset button	V	In the air damper motor: auxiliary switch for the release of fuel according to air damper position
G...	Fan or burner motor	W	Limit thermostat or pressurestat
H	Mains isolator	Z	Ignition transformer
L	Lockout warning lamp	Z	In the air damper motor: limit switch for the CLOSED position
L3	«Burner ready» indication		
LK	Air damper		
LP	Air pressure monitor		
LR	Load controller		
M	Auxiliary switch for MIN-position of air damper		

C4

CB1 - 7153 E

Connection of motors without limit switch for the CLOSED position of the air damper
(«Z» is adjusted to air volume for partial load)

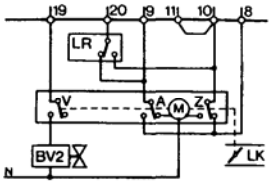

Control of an air damper motor by control signals supplied to terminal 17 (manner of operation similar to LAC1, LAC2 and LAC3). For signal path see diagrams on page 6

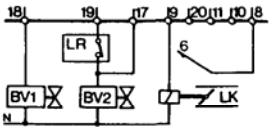

Burner without air damper
With burners without air damper (or with air damper which is not controlled and checked by the control unit), terminal 8 must be connected to terminal 6.

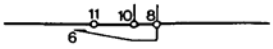

Control of a fuel valve by terminal 20
(Burner without air damper or with air damper which is not controlled by the burner control).
The relay is not necessary if the valve connected to terminal 20 is **hydraulically series-connected** to a valve which is controlled by terminal 18 or 19.

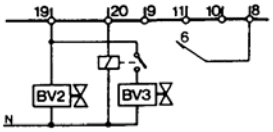

Wiring required with burners without air pressure supervision (LAL2 only)
If an auxiliary contact of the fan contactor is included in the circuit as this is shown in the wiring diagram, ignition and fuel release are possible only when the contact is closed.

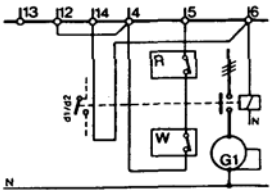

Semi-automatic start-up (LAL2 only)
The burner is switched on manually by pressing button «I», whereupon the control initiates the start-up and the flame supervision.
The burner is switched off manually by pressing button «O» or automatically by the limit thermostat or pressurestat «W». «L3» indicates when the burner control unit is ready to be started; it goes out shortly after the burner is switched on. – Other connections as shown on page 3.

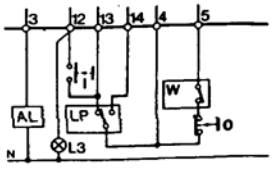

Connection examples

2-stage burner

Load control with an ON/OFF-controller. During burner-off periods, the air damper is in its closed position.

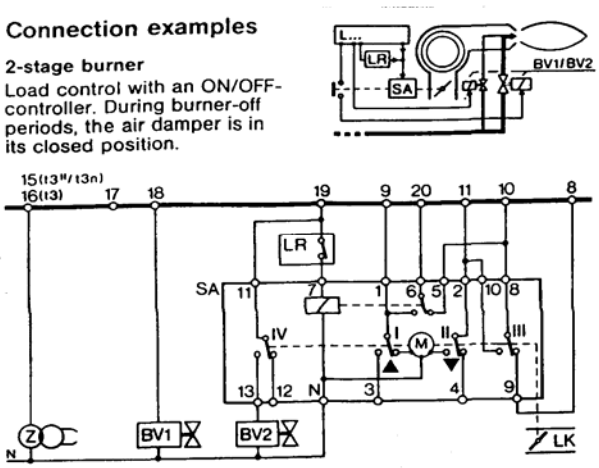

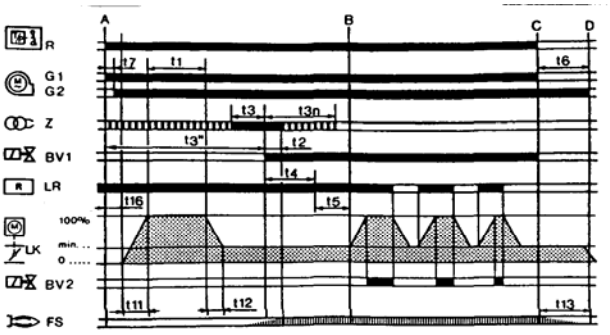

Air damper motor «SA» with one-wire control, e.g. type SQN30.111A..., see leaflet 7808.

Shaded area: Pre- and post-ignition if the ignition transformer is connected to terminal 15. — Other connections as shown on pages 2 and 3.

Modulating burner

Load control with a continuous controller having galvanically separated control contacts for OPEN and CLOSE travel.

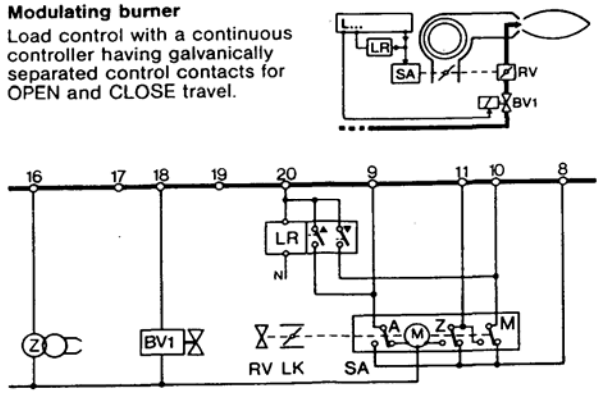

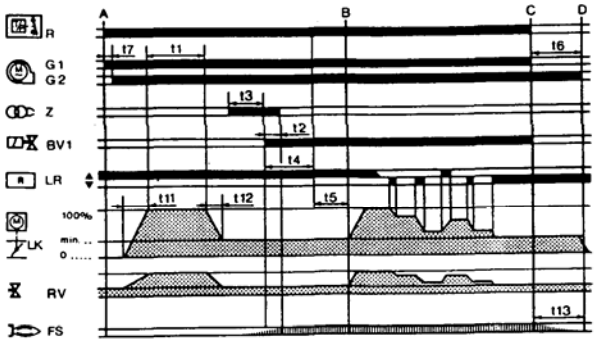

The air damper is closed during burner-off periods. With motors without limit switch «Z» for the CLOSED position, terminals 10 and 11 must be connected. — Other connections as shown on pages 2 and 3.

Technical data

Nominal voltage	220 V −15%...240 V +10% types LAL2... on request 100 V −15%...110 V +10%
Frequency	50 Hz −6%...60 Hz +6%
Consumption	3,5 VA
Fuse (built-in)	T6,3/250 V (lag according to DIN 41571, sheet 2), part no. 4 519 1507 0
External fuse	max. 16A, lag
Spark disturbance level	N according to VDE 0875
Permissible input current at terminal 1	5A according to VDE 0660 AC3
Permissible loading of control terminals	4A according to VDE 0660 AC3
Required switching capacity of switching devices between — terminals 4 and 5 — terminals 4 and 12 — terminals 4 and 14	 1A, 250 V~ 1A, 250 V~ depending on the load on terminals 15, 16, 18; min. 1A, 250 V~
Mounting position	optional
Protection standard	IP40
Permissible ambient temp. — Control unit — QRB... — RAR...	 −20...+60°C −20...+70°C −20...+60°C
Lowest perm. temperature during transport and stockage	−50°C
Weights — Control unit/baseplate — QRB1 with 500 mm cable — QRB1 with plastic plug and 500 mm cable — QRB3 without cable — RAR...	 approx. 1000/165 g approx. 25 g approx. 32 g approx. 35 g approx. 85 g

Flame supervision

Burner control **LAL1...** with detector:	QRB...	QRB...S
Min. required detector current with 220/240 V	95/105µA	95/105µA
Max. possible detector current	160µA	160µA
+pole of the instrument	to terminal 23	
Recommended illumination at a colour temperature of 2856 K	40 Lux	5 Lux
Detector wiring length — in the case of a multicore cable — with separately laid cable	 max. 30 m Max. 1000 m	 max. 30 m max. 1000 m

Burner control **LAL2...** with detector:	QRB...	QRB...S	RAR...
Min. required detector current with 220/240 V	8/8µA	8/8µA	6,5/6,5µA
Max. possible detector current	35µA	35µA	25µA
+pole of the instrument	to terminal 22		
Recommended illumination at a colour temperature of 2856 K	40 Lux	5 Lux	5 Lux
Detector wiring length — in the case of a multi-core cable — with separately laid cable — with low capitance screened cable (screen insulated!)	 not admissible 20 m 200 m	 20 m 200 m	 RAR7: 30 m RAR8: 1000 m
Screen to terminal	23	23	24

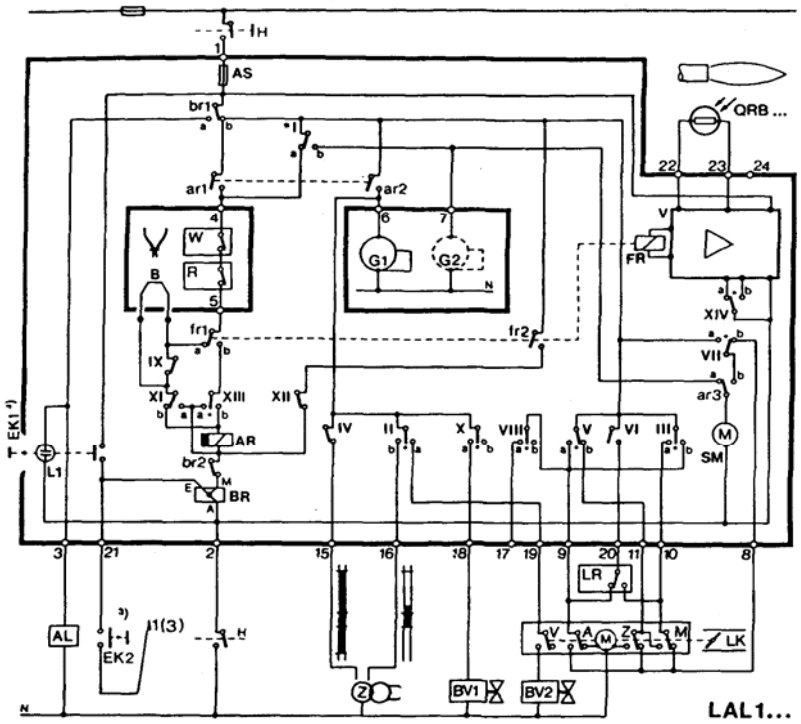

Design of the control units

The control units are of plug-in design. Housing and connection socket are made from heat and impact resisting black plastic material. The housing contains:

- the oversized synchronous motor of the programming mechanism with gear train and step action sequence switch
- the sequence switch with 15 non-adjustable cams
- the lockout indicator at the head of the sequence switch
- the main relay (load relay)
- the lockout relay with electrical remote reset facility having the functions «lockout» — «reset»
- the electronic flame signal amplifier with its flame relay
- the lockout reset button with built-in lockout warning lamp and
- the unit fuse with spare fuse

All electric and electronic components are connected via printed circuits.

For design of the connection socket and terminal designations refer to «Application features with respect to mounting and electrical installation».

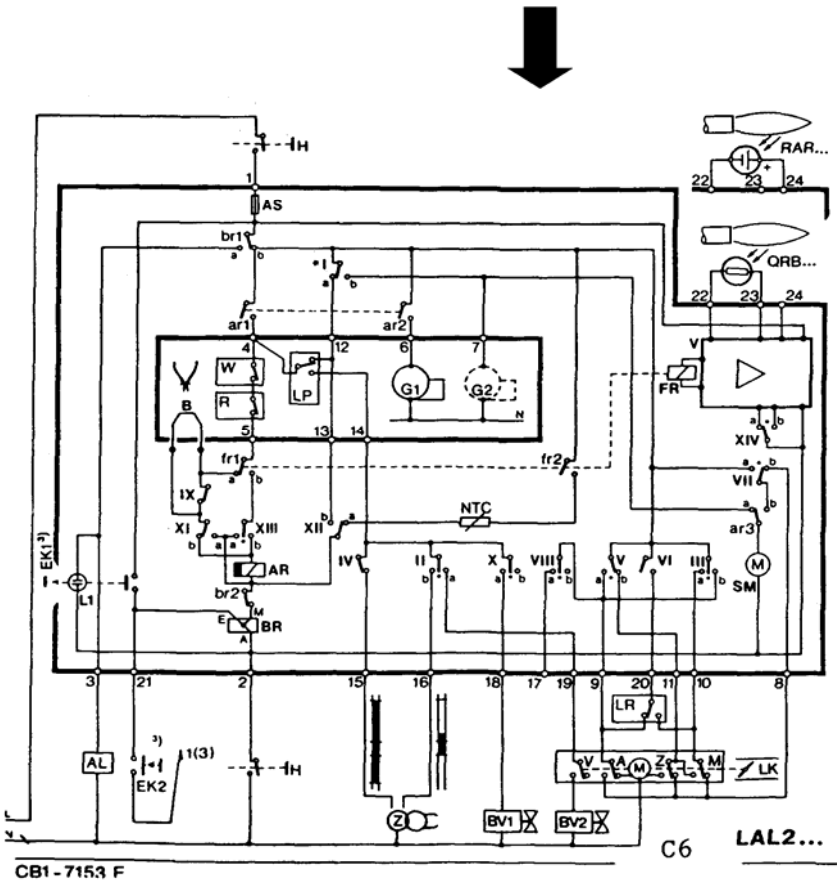

Legend

A	Limit switch for OPEN position of air damper
AL	Remote lockout warning device (alarm)
AR	Main relay (load relay) with contacts «br»
AS	Unit fuse
B	Wire link
BR	Lockout relay with contacts «br»
BV	Fuel valve
EK	Lockout reset button
FR	Flame relay with contacts «fr»
G...	Fan or burner motor
H	Mains isolator
L	Lockout warning lamp
LK	Air damper
LP	Air pressure monitor
LR	Load controller
M	Auxiliary switch for MIN-position of air damper
QRB...	Photoresistive detector
R	Control thermostat or pressurestat
RAR...	Selenium photocell detector
S	Fuse
SA	Air damper motor
SM	Sequence switch motor
V	Flame signal amplifier
V	In the air damper motor: auxiliary switch for the release of fuel according to air damper position
W	Limit thermostat or pressurestat
Z	Ignition transformer
Z	In the air damper motor: limit switch for the CLOSED position
*	For technical reasons, changeover switch XV has been incorporated which operates parallel to I.
3)	Press EK for no more than 10 seconds

LAL3.25

The basic circuit diagram of the LAL3.25 differs from that of types LAL2... in that the following elements and corresponding current paths are deleted: contact fr2, NTC-resistor, contact XIIa and contact XIIIa, i.e. with extraneous light during burner off periods and during the pre-purge time lockout does **not** occur but the burner start-up is prevented until the extraneous light (or any other faulty flame signal) is no longer present.

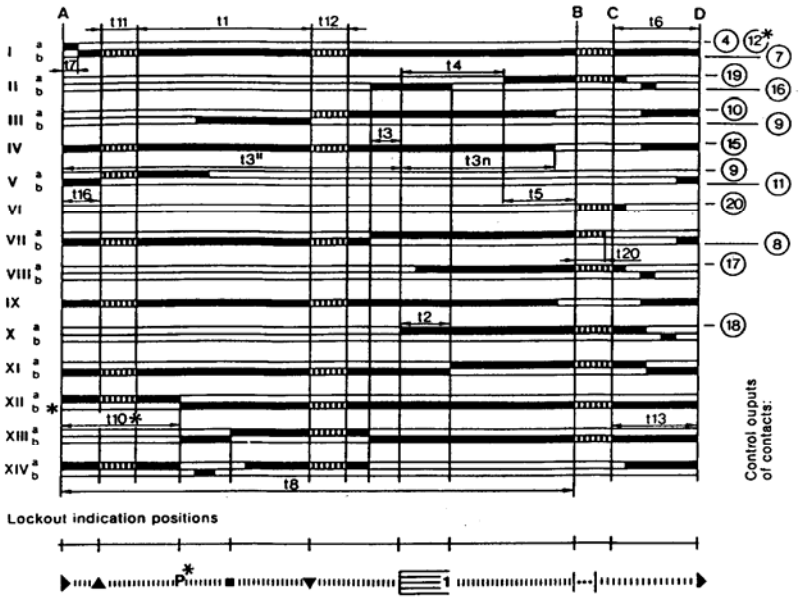

* Valid for LAL2-types only!

Available types

Switching times in seconds in the sequence of the burner start-up, valid for frequency of 50 Hz; for 60 Hz frequency switching times are reduced by 20%. — Times in bold type (rounded up) are the digits of unit type reference.

●	For flame supervision with photoresistive detectors type QRB...		Univ. appl. **LAL1.25**	
●	For flame supervision with photoresistive detectors type QRB... **or** selenium cell detectors type RAR..., with the			
●	possibility to supervision the air pressure and the	Flash-steam generators	Universal application	Medium and heavy oil burners
●	possibility of semi-automatic start-up	**LAL2.14**	**LAL2.25**	**LAL2.65**
●	**Same as LAL2.25** with the exception that extraneous light does **not** cause burner lockout but prevents start-up of burner		Spec. appl. e.g. incinerator plants **LAL3.25**	
t7	Start-up time for fan motor G2	**2**	**2,5**	**2,5**
t16	Interval from start-up to OPEN command for air damper	4	5	5
t11	Running time for air damper to OPEN position	optional	optional	optional
t10	With LAL2... types only: Interval from start-up to beginning of air pressure check	6	10	10
t1	Pre-purge time with air damper open	10	**22,5**	**67,5**
t12	Running time for air damper to MIN. position	optional	optional	optional
t3"	Pre-ignition time «LONG» (transformer connected to terminal 15)	from start command**	from start command**	from start command**
t3	Pre-ignition time «SHORT» (transformer connected to terminal 16)	2	2,5	2,5
t2	Safety time [1]	**4**	**5**	**5**
t3n	Post-ignition time (transformer connected to terminal 15)	10	15	15
t4	Interval between beginning of t2 and release of valve at terminal 19	8	7,5	7,5
t5	Interval between end of t4 and release of load controller at terminal 20	4	7,5	7,5
t20	Interval up to the self-shutdown of the sequence switch («idle steps»)	32	35	20
t6	Post-purge time (with G2)	10	15	15
t13	Permissible after-burn time	10	15	15
t8	Duration of start-up (without t11 and t12)	**30**	**47,5**	**92,5**

[1]) Response time to loss of flame during burner run: <1s

C7

** With air pressure supervision (LAL2...): From air pressure signal of the monitor «LP»

CP1 7152 E

Design of the light detectors QRB...

The detectors, with the exception of QRB3, can be supplied in normal or high response sensitivity variants. The higher sensitivity variants are marked in **red** and with an «**S**» after the type reference.

When using the higher sensitivity ...S-types, the burner must be strongly illuminated to check the extraneous light test of the burner control. To comply with DIN 4787, Part 1, Section 5.1b resp. draft ISO/DIS 3544.2, Section 4.2.2a, the test must be made with an illumination strength of 20.000 Lux at 2856 K on the surface of the burner.

QRB1 **Standard execution,** normal sensitivity

QRB1S **Standard execution,** high sensitivity



Especially small dimensioned photo-resistive detector with infused thermoplastic cable. A guide groove in the securing flange and a spring loaded cam on the detector clamp ensure not only a vibration proof mounting of the detector, but also always ensure the correct sighting of the photo-resistance on the flame. Accessories (see also the dimension diagrams):

- Securing flange, with choice between 21 or 36 mm hole centres.
- Detector clamp, normal.
- Detector clamp for flexible conduit.

Required ordering references:

- Type of detector (QRB1 or QRB1S).
- Total length of cable «L» and stripped length «M» in **cm**, e.g.: QRB1S/**50-4**; standard lengths according to dimension diagram.
- Required accessories (clamp and flange). For ordering references refer to dimension diagrams.

QRB1 **with soft plastic plug,** normal sensitivity

QRB1S **with soft plastic plug,** high sensitivity



All that is necessary for the mounting of this detector on the burner is a hole with a side groove (see dimensions diagrams). The sealing and securing ribs of the plug hold the detector firmly in the hole; the guide key guarantees correct alignment of the photo-resistive element to the flame. — Required ordering references:

- Type of detector (QRB1 with plug or QRB1S with plug).
- Total length of cable «L» and stripped length «M» in **cm**, e.g.: QRB1S/50-7 with plug. Standard lengths according to dimension diagram.

QRB1S with plastic plug can also be supplied complete with **detector casing of 118 mm length** (Drawing: 118 mm instead of 31 mm). «L» approx. 270 mm, «M» approx. 40 mm. Type reference: **QRB1S-27.4 AMST**.

QRB3 **with protective housing,** normal sensitivity

QRB3S **with protective housing,** high sensitivity



Housing ø 17 mm. Delivered without connecting cable. Terminal block easily accessible. Delivered complete with mounting flange and detector clamp.

Design of flame detectors RAR...



The light sensitive element is a selenium photocell (active sensing element); it is hermetically sealed under the protective glass window of the black Duroplast detector housing. The photocell is active within the visible band of the spectrum and generates an emission current sufficient for flame supervision only when illuminated by light from that band (insensitive to infra-red radiation!). A mounting flange and clamp is delivered with the detector.

Dimensions

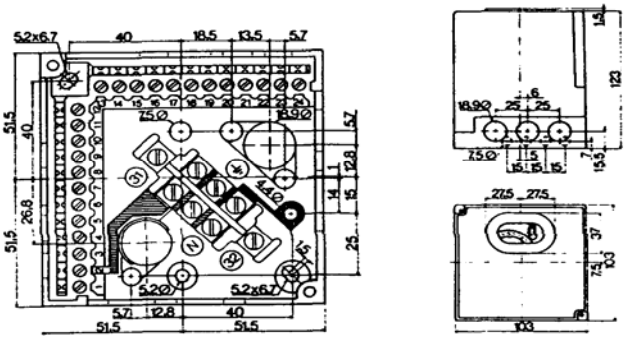

Stock No. of the base plate: 4 104 9050 0

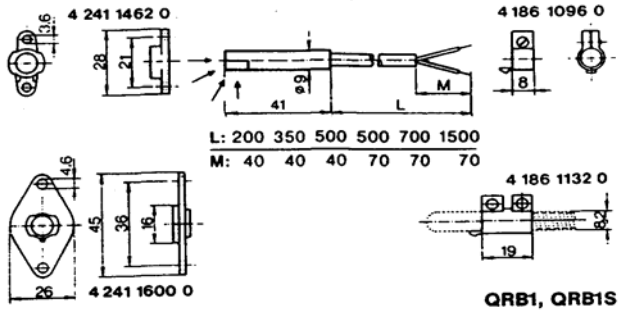

QRB1, QRB1S

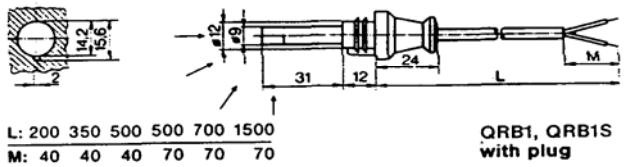

QRB1, QRB1S with plug

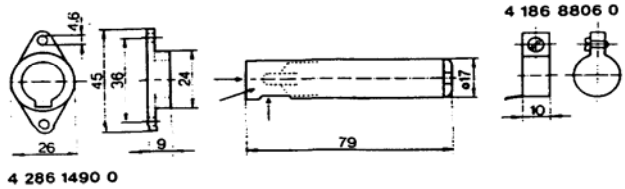

QRB3, QRB3S

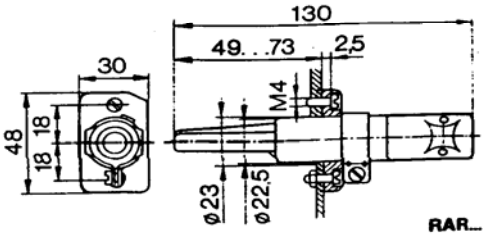

RAR...

We reserve the right to make changes and improvements in our products, which may affect the accuracy of the information contained in this leaflet

BURNER (ST) TYPE DH-160
77S4047
INSTRUCTION FOR OPERATION AND MAINTENANCE

Check the size of oil nozzle. The pump pressure is factory adjusted at 10 bar.

	DANSK	ENGLISH
	Symbol-forklaring	Symbols
P_1	Tryk-regulering	Pressure regulation
S	Sugeledning G ¼	Suction line G ¼
R	Returledning G ¼	Return line G ¼
	Dysetilslut-ning venstre G ¼ (alterna-tiv højre)	Nozzle conn. left G ¼ (right hand available to order)
V	Tilslutning for vakuum-meter G ⅛	Vacuum meter conn. G ⅛
P	Tilslutning for mano-meter front samt højre G ¼ (alterna-tiv venstre)	Pressure gauge conn. in front and right G ¼ (left hand available to order)
F	Patronfilter	Cartridge filter

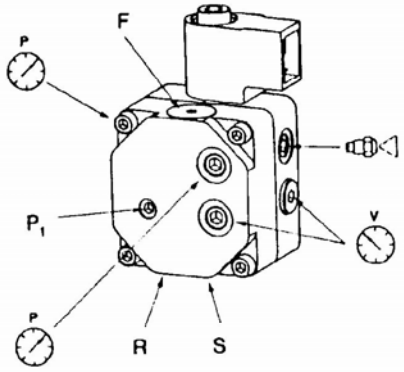

Adjustment of ignition electrodes

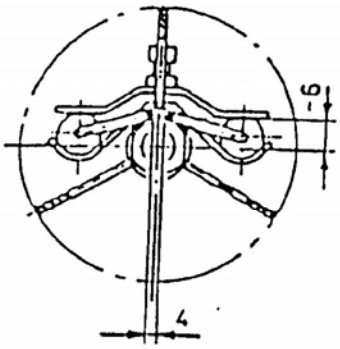

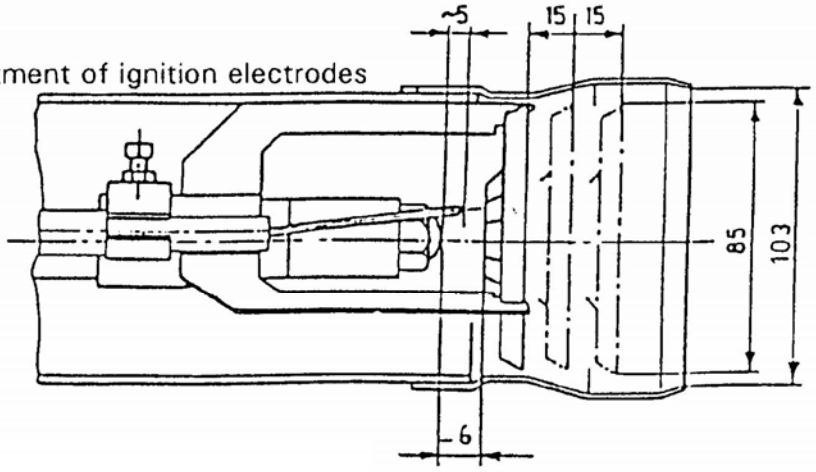

W.O DOSING PUMP PU-3
TYPE MAXI 50 SL-1 WS
INSTRUCTION FOR OPERATION AND MAINTENANCE

Self-priming positive displacement pump with geared motor.

Type pump	: HMD 008-12L
Capacity	: 19-105 l/h
Head	: 2 Bar
Output speed	: 92~483 rpm (nom. 137)
Motor	: 0.45 Kw
Motor speed	: 1,690 rpm

MATERIAL SPECIFICATION

LANTERN	: Steel St 37-2
SUCTION CASING	: 1.4408
PRESSURE BRANCH	: 1.4571
COUPLING ROD	: 1.6582
ROTOR	: 1.4571
MECHANICAL SEAL CASING	: 1.4571
JOINT SEAL	: NBR Perbunan
PLUG-IN SHAFT	: 1.4571
STATOR	: VITON

W.O DOSING PUMP PU-3
TYPE MAXI100/150 SL-1 WS
INSTRUCTION FOR OPERATION AND MAINTENANCE

Self-priming positive displacement pump with geared motor.

Type pump	: HMD 012-12L
Capacity	: 26-137 l/h
Head	: 2 Bar
Output speed	: 92~483 rpm (nom. 137)
Motor	: 0.45 Kw
Motor speed	: 1,690 rpm

MATERIAL SPECIFICATION

LANTERN	: Steel St 37-2
SUCTION CASING	: 1.4408
PRESSURE BRANCH	: 1.4571
COUPLING ROD	: 1.6582
ROTOR	: 1.4571
MECHANICAL SEAL CASING	: 1.4571
JOINT SEAL	: NBR Perbunan
PLUG-IN SHAFT	: 1.4571
STATOR	: VITON

Progressive Cavity Pumps PU3
Waste oil dosing pump

Lubrication

GEAR UNIT SIZE	R1 GEAR UNITS MOUNTING POSITION / LUBRICANT QUANTITY			TYPE	BRAND
	B3-B5	**V1-V5**	**V3-V6**		
RF40/1 - RM40/1 - RT40/1 (SRF03/1)	0.200KG	0.260KG	0.230KG		
RF50/1 - RM50/1 - RT50/1 (SRF05/1) (SPRF05/1)	0.350KG	0.450KG	0.400KG		
RF63/1 - RM63/1 - RT63/1 (SRF10/1)	0.600KG	0.800KG	0.700KG	ALTINA -	IP
RF80/1 - RM80/1 - RT80/1 (SRF20/1)	1.000KG	1.300KG	1.150KG	GREASE O	
RF100/1 - RM100/1 - RT100/1 (SRF30/50/1)	1.600KG	2.100KG	1.900KG		
RF125/1 - RM125/1 - RT125/1 (SRF100/1)	2.500KG	3.300KG	2.900KG		

GEAR UNIT SIZE	R2 GEAR UNITS MOUNTING POSITION / LUBRICANT QUANTITY			TYPE	BRAND
	B3-B5	**V1-V5**	**V3-V6**		
RF40/2 - RM40/2 - RT40/2	0.300KG	0.400KG	0.350KG		
RF50/2 - RM50/2 - RT50/2	0.550KG	0.700KG	0.600KG	ALTINA -	IP
RF63/2 - RM63/2 - RT63/2	1.000KG	1.300KG	1.150KG	GREASE O	
RF80/2 - RM80/2 - RT80/2	5.000KG	6.500KG	5.800KG		
RF100/2 - RM100/2 - RT100/2	8.300KG	10.800KG	9.500KG	MELLANA	IP
RF125/1 - RM125/1 - RT125/1	13.000KG	17.000KG	15.000KG	OILS	

RECOMMENDED TYPES OF GREASE: R1 / R2 GEAR UNITS		RECOMMENDED TYPES OF GREASE: R2 GEAR UNITS	
		OMALA OIL	SHELL
SIMMIA GREASE O	SHELL	MOBILGEAR 630	MOBIL
FGL	BP	SPARTAN EP 220	ESSO
NEBULA EP O	ESSO	GR-XP 220	BP
GR MU/EP O	AGIP	BLASIA 220	AGIP

Remark

1. Initial filling q'ty is provided by maker
2. Oil change interval : Every 12 months (Overall change)

Filling Up of Suction Side to Avoid Dry Running at Startup

CAUTION

Before switching on the pump, fill the suction-sided pump casing with fluid so that the first rotations will lubricate the conveying elements immediately. A small quantity of fluid is sufficient for lubrication; the subsequent operation of the pump is self-priming, even if an air column up to the liquid level remains.

Electric/Hydraulic Connections

The risk of exposure to electrical hazards must be ruled out. Always observe the safety regulations valid at the site of installation.

Checking Direction of Rotation

The rotational direction of the pump determines the flow direction of the conveying medium.
Prior to commissioning, the rotational direction of the pump must be checked for compliance wlth the data sheet specification and the rotational direction arrow on the type plate of the pump.

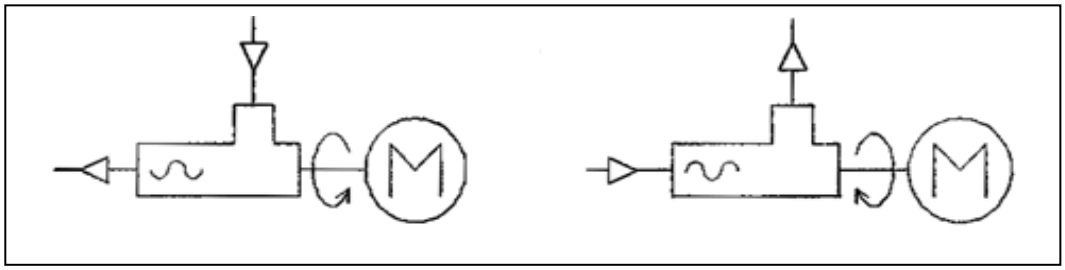

COUNTER-CLOCKWISE CLOCK-WISE

SLUDGE BURNER (B)
INSTRUCTION FOR OPERATION AND MAINTENANCE

This type of sludge burner is specially designed to handle sludge with soft particles up to max. 8 mm. diameter.
In order to obtain proper combustion the below procedure should be observed strictly.
Before start-up check the following:

1. The combustion air will be regulated by means of an air damper in order to obtain complete combustion. The combustion is controlled visually by means oaf a sight glass on the side of the incinerator. Note: During test of new incinerator's the damper is adjusted and should not be changed.

2. When starting-up the atomizing air regulates the pressure between 0,8 – 2 bar.

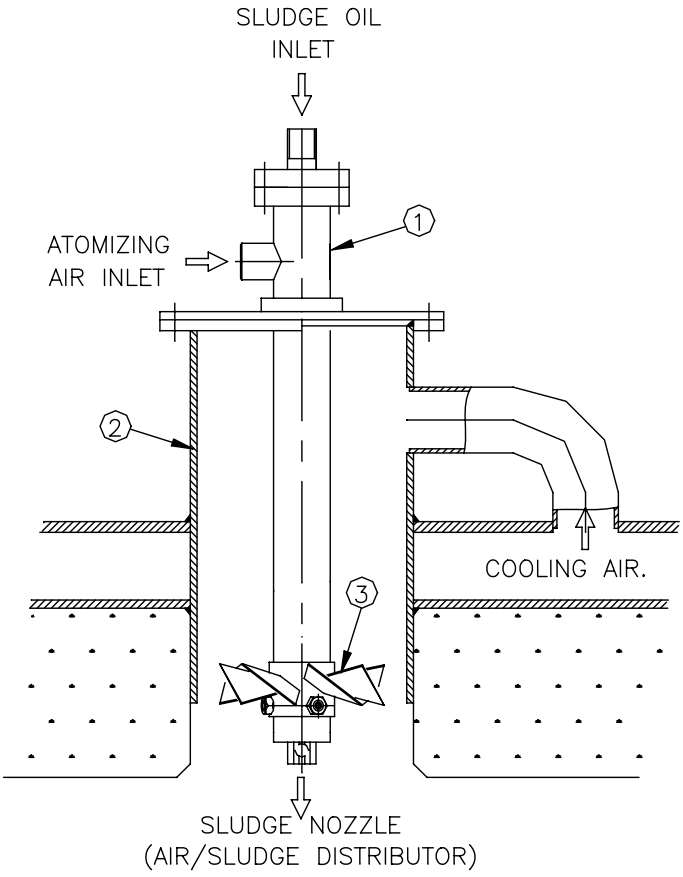

SLUDGE NOZZLE

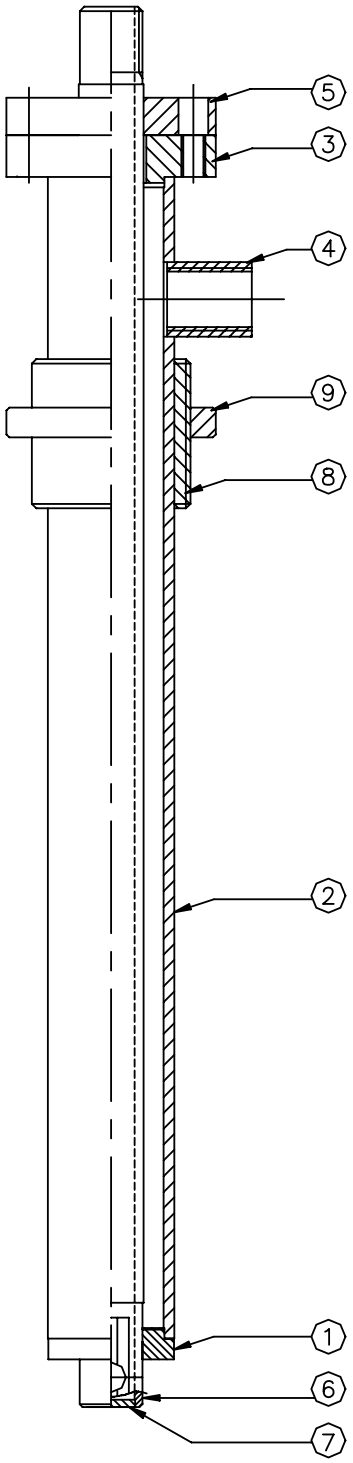

Pos.	Q'ty	Designation
1	1	Flange for air tube
2	1	Air tube
3	1	Flange
4	1	Socket
5	1	Flange for sludge pipe
6	1	Sludge pipe
7	1	Plate for sludge pipe
8	1	Joint bushing for sludge pipe
9	1	Lock nut for joint bushing

INSTRUCTION FOR REPAIR OF REFRACTORY LINING

The refractory lining should be maintained according to operation and maintenance instructions. In case of damage to the lining, repairs can be carried out according to the following instructions:

Repair type 1 : Damages of less than 4 cm^3 and cracks wider than approx. 5 mm.

Repair type 2 : Damages of between 4 cm^3 and 100 cm3

Repair type 3 : Damages exceeding 100 cm^3 and wear exceeding approximately 20 mm.

LINE OF PROCEDURE

Repair type 1

The damaged area is to be cleaned for loose particles and then coated with an air setting mortar or a special, fine grain coating with approximately 45% Al_2O_3 and a low iron content temperature limit of approximately 1450 ℃.

Repair type 2

The damaged area is to be cleaned for loose particles.
A chemically setting plastic mouldable with approximately 45% Al_2O_3 a temperature limit of approximately 1500℃, and a grain size 0 - 5 mm can be used. The mouldable is to be formed to balls of approximately 50 mm dia. and rammed into position in the holes. This should be continued until the damage is repaired.

In order to obtain a good result the repair spot should have a finish coating. The incinerator has to air dry for 2 -4 hours before it is operated again.

Repair type 3

Please contact HYUNDAI for information or contact a company specialized in refractory linings.

Broken ceramics are to be replaced by new ones using air setting mortar and castable refractory.

SCHEME FOR MAINTENANCE
HYUNDAI-ATLAS INCINERATOR
TYPE MAXI 50/100150 SL-1 WS

COMPONENT	CONTROL/INSPECTION/EXCHANGE	INTERVAL
Control Panel (CP-l)	Thermal relay (motor overload protector) to be Checked (setting) Terminals to be tightened up. Temperature setting in temp regulator to be checked,	5000 h 2000 h
Sludge burner (B)	To be cleaned and inspected for wear and tear.	500 h
Primary Burner (ST-1)	Oil nozzle to be changed. Oil filter on diesel oil pump to be cleaned, Electrodes to be checked, see also Special instruction.	2000 h
Flame detector (FD)	Photo cell to be cleaned.	2000 h
Thermocouple (TC)	To be cleaned and controlled. To be Exchanged in case of fracture.	2000 h
Solenoid valves	To be checked for mobility tightness and possible obstruction. Electrical connections to be tightened up and cables to be checked.	5000 h
Pressure control (PS)	To be checked for function, adjustment And tightness.	5000 h
W.O Dosing pump (PU-3)	Check of stator, rotor and mechanical seal	1000 h
Mill pump (PU-5)	Check of impeller and mechanical seal	1000 h
Gear motor for PU-3	Oil level to be controlled.	Regularly
Mill pump (PU-5)		
Doors (IL)	To be checked for possible leaks.	5000h
Refractory Lining	Inspection, concrete wash and repair, if necessary. See special instruction	2000h
Self-cleaning Strainer for sludge	Deposits to be removed	2000h

The bearings for all electrical motors are of the fully closed type without lubricating nipples. Change of bearings after a working shift of 10,000 hours

LUBRICATION SCHEME
HYUNDAI-ATLAS INCINERATOR
TYPE MAXI 50/100/150 SL-1 WS

Component		Initial Filling Q'ty	Lubrication
W.O Dosing pump Gear box	PU-3	300 cc	Machine Oil
Mill pump Stuffing box	PU-5	500 cc	Turbine Oil
Any Brand	ISO Grade between 68 to 320 : Machine oil, Gear oil, Turbine oil of any brand can be selected.		

All el-motors and pumps are pre packed with grease and need not to be lubricated except at change of bearings or after a working shift of 10.000 hours.

The table below indicates various types of Lub. oil which can be used :

Incinerator type		MAXI Type	
Application point		W.O pump gear box	Mill pump seal box (Grade : VG 46)
Initial filling Q'ty		300 cc	750 cc
BRAND	B.P	ENERGOL GR – XP 220	ENERGOL THB 68
	CALTEX	MEROPA 220	REGAL R&O 46 / 68
	CASTROL	ALPHA SP 220	PERFEDCTO T 46 / HYSPIN AWH-M46
	FAMM (Chevron Texaco)	MEROPA 220	REGAL R&O 46 / 68
	ESSO	SPARTAN EP 220	TERESSTIC T 46
	EXXON-MOBIL	MOBIL GEAR 630	MOBIL DTE 15M
	SHELL	SHELL OMALA 220	SHELL TIVELA OIL SC 320
	TOTALFINAELF	EPONA Z 220	TURBINE T 68
ANY BRAND	ISO grade between 68 TO 320 : Machine oil		
	gear oil, turbine oil of any brand		
	can be selected.		
Remark			
1. Initial filling Q'ty is provide by maker.			
2. Oil change interval : Every 12 months (Overall change)			

.

Part 6
LIST OF PARTS

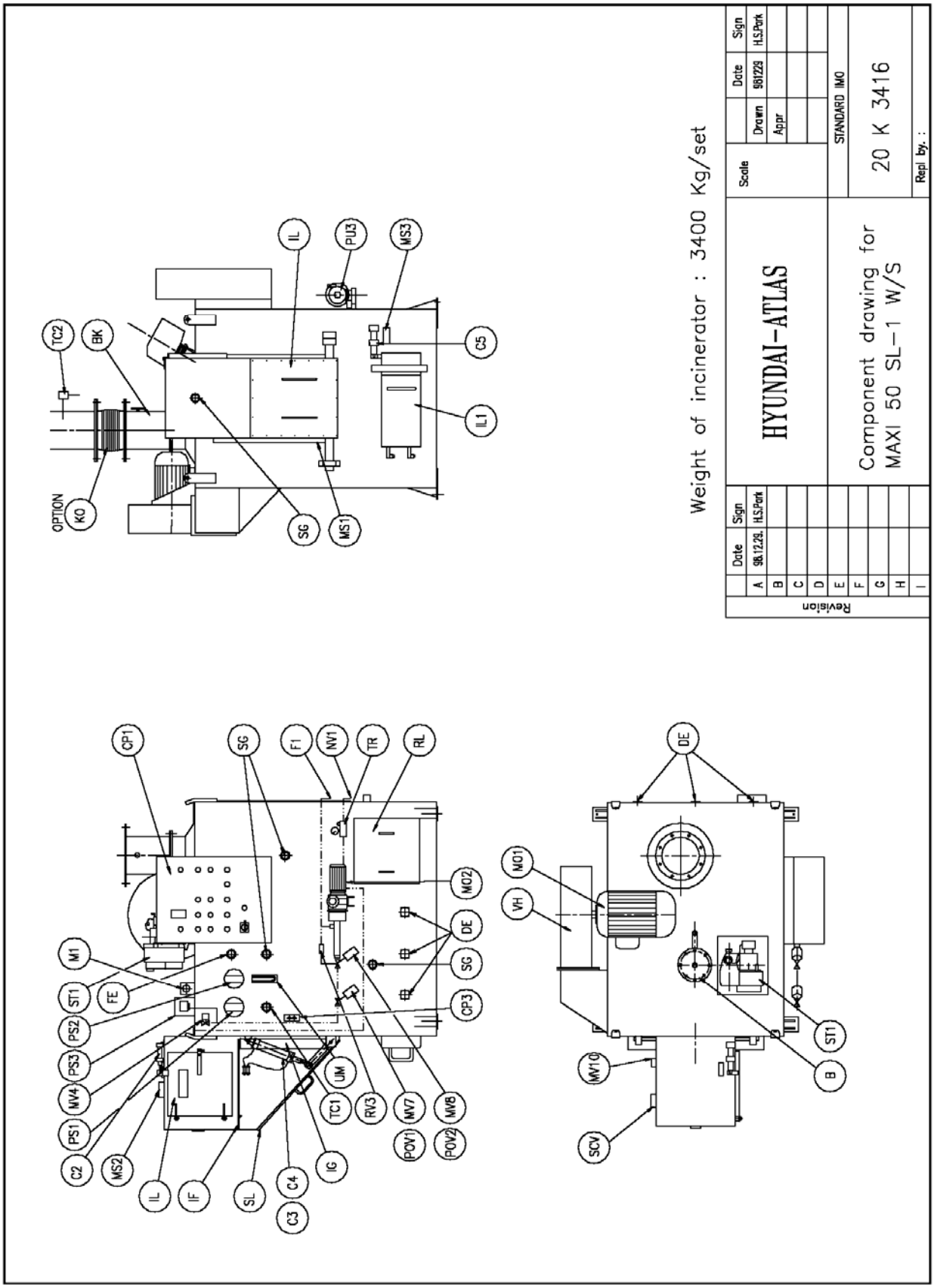
Weight of incinerator : 3400 Kg/set
HYUNDAI-ATLAS
Component drawing for
MAXI 50 SL-1 W/S
20 K 3416
STANDARD IMO
Revision
Date
Sign
Drawn
Appr
Scale
Repl by. :
IL
PU3
MS3
TC2
BK
C5
IL1
OPTION
KO
SG
MS1
CP1
SG
F1
NV1
TR
RL
M1
ST1
FE
PS2
PS3
NV4
PS1
C2
MS2
IL
IF
SL
C4
C3
IG
TC1
UM
RV3
MV7
POV1
MV8
POV2
CP3
SG
DE
MO2
DE
MO1
VH
MV10
SCV
ST1
B

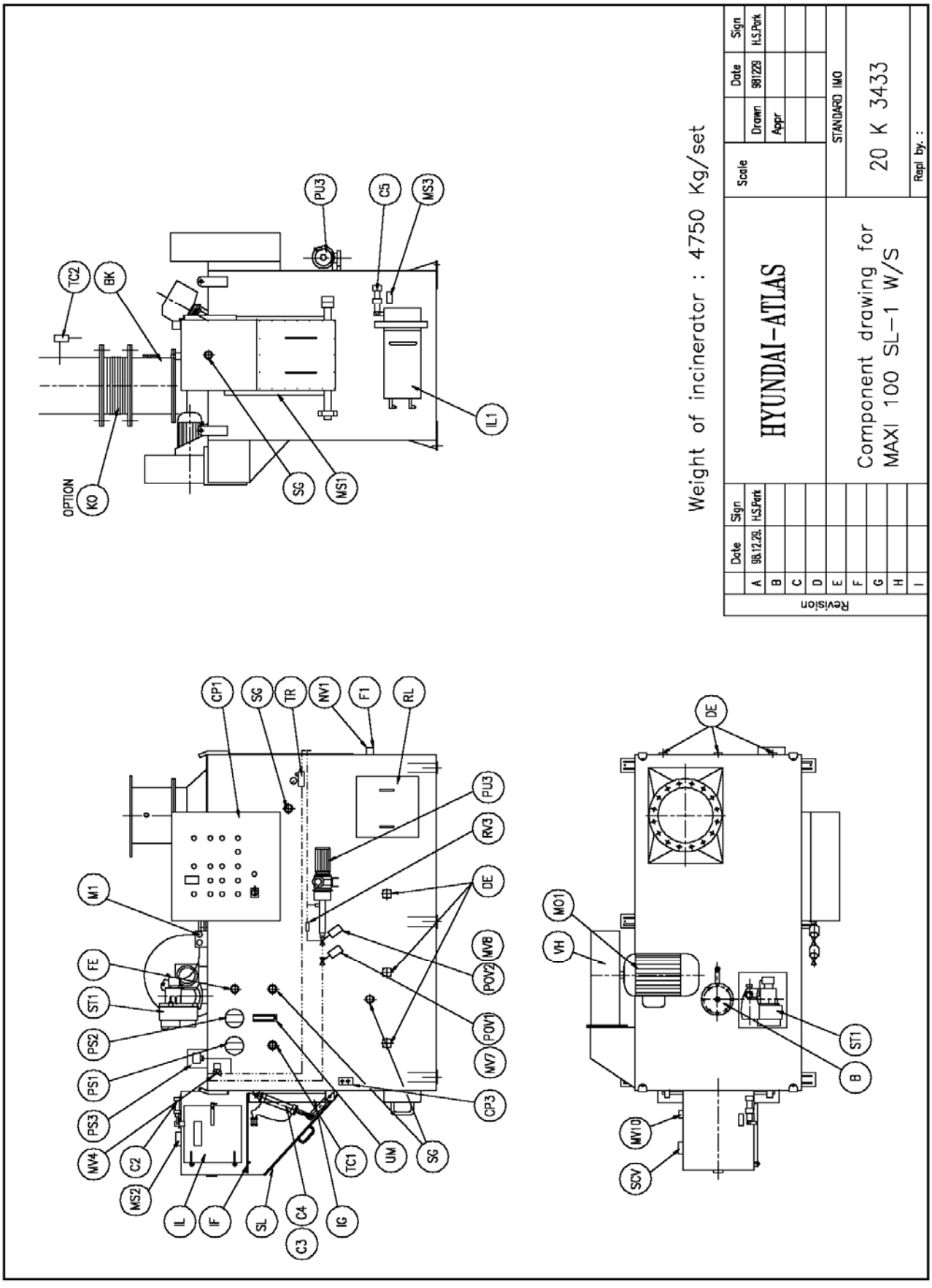
Weight of incinerator : 4750 Kg/set
HYUNDAI-ATLAS
Component drawing for
MAXI 100 SL-1 W/S
STANDARD IMO
20 K 3433
Scale
Drawn
Appr
Date
981229
Sign
H.S.Park
Repl by. :
Revision
A
B
C
D
E
F
G
H
I
98.12.29.
OPTION
KO
TC2
BK
PU3
C5
MS3
IL1
SG
MS1
CP1
TR
NV1
F1
RL
RV3
DE
M1
FE
ST1
PS2
PS1
PS3
MV4
C2
MS2
IL
IF
SL
C4
C3
IG
TC1
UM
MV8
POV2
POV1
MV7
CP3
MO1
VH
MV10
SCV
B

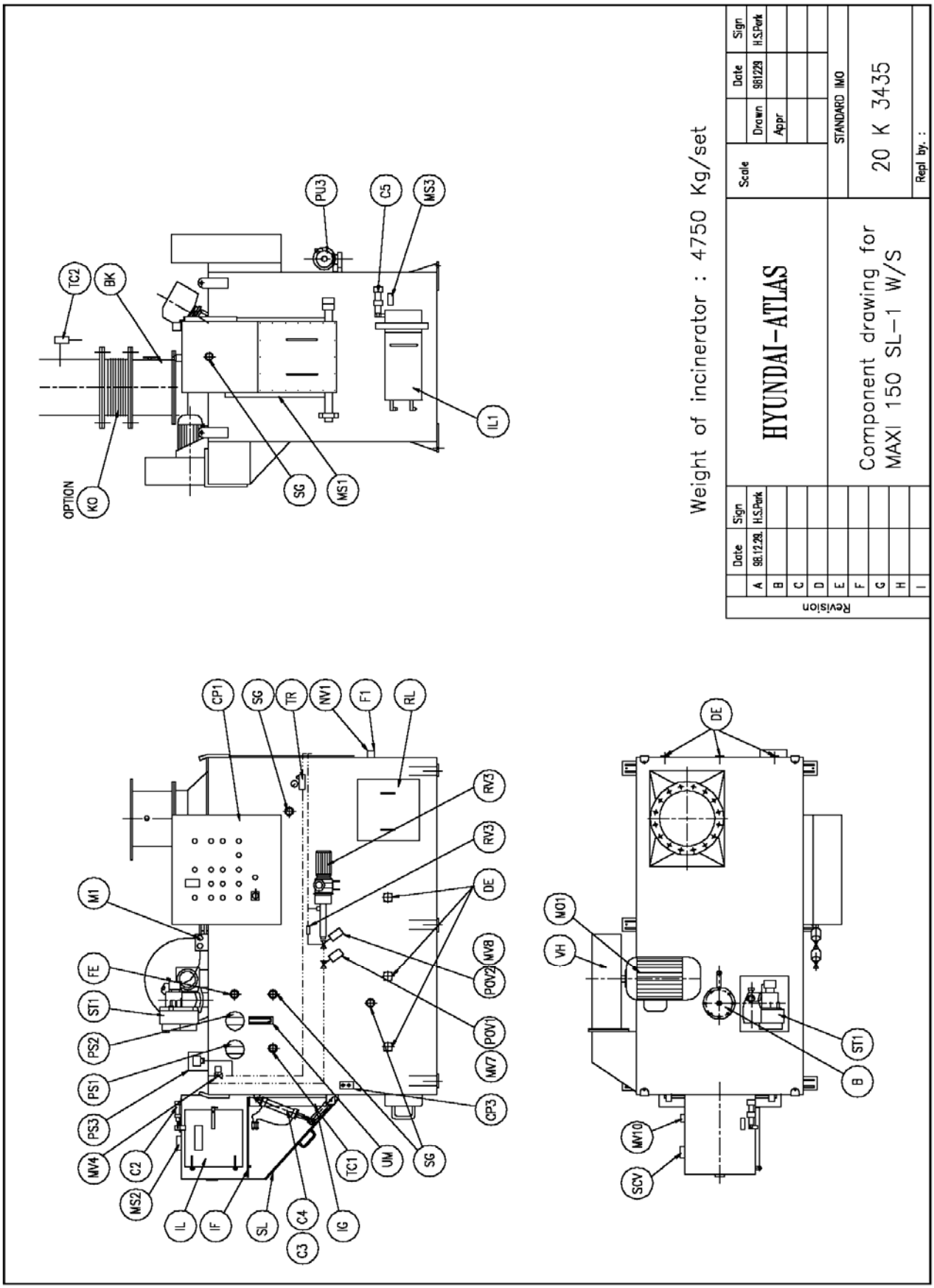
Weight of incinerator : 4750 Kg/set
HYUNDAI-ATLAS
Component drawing for MAXI 150 SL-1 W/S
20 K 3435
STANDARD IMO
Revision
Scale
Drawn
Appr
Date
Sign
H.S.Park
98.12.29.
961229
Repl by. :
TC2
BK
PU3
C5
MS3
IL1
OPTION
KO
SG
MS1
CP1
TR
NV1
F1
RL
RV3
DE
MV8
POV2
POV1
MV7
CP3
M1
FE
ST1
PS2
PS1
PS3
MV4
C2
MS2
IL
IF
SL
C4
C3
IG
TC1
UM
SG
MO1
VH
MV10
SCV
B

HYUNDAI-ATLAS INCINERATOR
TYPE MAXI 50/100/150SL-1 WS
LIST OF COMPONENTS

(See component drawing)

KEY	COMPONENT	ITEM NO.
B	Sludge burner	HM20P2048*
BK	Mixing chamber	HM20P2011
C2	Cylinder lock for feeding door	HM58L4003
C3/C4	Cylinder lock for inside door	HM58L4003
C5	Cylinder lock for ash door	HM87M4028
CP1/CP3	Control panel	HYUNDAI-ATLAS
DE	Air inlet nozzle	HM20P3057
F1	Sludge strainer (self cleaning filter)	HM65D4005
FE	Flame eye	HM60F4011
IF	Trap door (for sluice)	HM20P4121
IG	Inside door (for sluice)	HM20P2052
IL	Feeding door (for sluice)	HM71D4006
IL1	Ash door	HM20P2056
KO	Expansion joint (option)	HM30P3195
M1	Pressure gauge for ST1	HM62M4001
MO1	EI-motor for primary blower	HM80E4016
MO2	Motor and gear for PU3	HM80P4204
MS2	Micro switch feeding door (sluice)	HM57S4001
MS3	Micro switch ash door (sluice)	HM57S4001
MV4	Solenoid valve (atomizing air)	HM87M4013
MV7	Solenoid valve (for sludge)	HM87M4011
MV8	Solenoid valve (for sludge)	HM87M4010
MV10	Solenoid valve (for sluice)	HM87M4018

KEY	COMPONENT	ITEM NO.
NV1	Non-return valve	HM87D4013
POV1	Sludge valve air operated	HM87M4016
POV2	Sludge valve air operated	HM87M4016
PS1	Pressure control for cooling air	HM60P4001
PS2	Pressure control for low negative pressure	
	Combustion air	HM60P4007
PS3	Pressure control for atomizing air	HM60P4005
PU3	W.O Dosing pump	HM80P4206*
RL	Cleaning cover	HM20P2058
RV3	Pressure valve (sludge)	HM87D4012
SCV	Speed controller (sluice)	HM87N4005
SG	Sight glass Ø 55 mm	HM68A4002
ST1	Primary burner	HM77S4047*
TC1	Thermocouple combustion chamber	HM60T4001
TC2	Thermocouple exhaust gas	HM60M4001
TR	Pressure regulator	HM60P4002
	Pressure gauge on pressure regulator TR	HM62M4002
UM	U-tube vac. Meter	HM62M4011
VH	Primary blower 60 cycl.	HM79B4015

* See separate spare part lists for this item no.

BURNER (ST) TYPE DH-160 E2
PARTS LIST

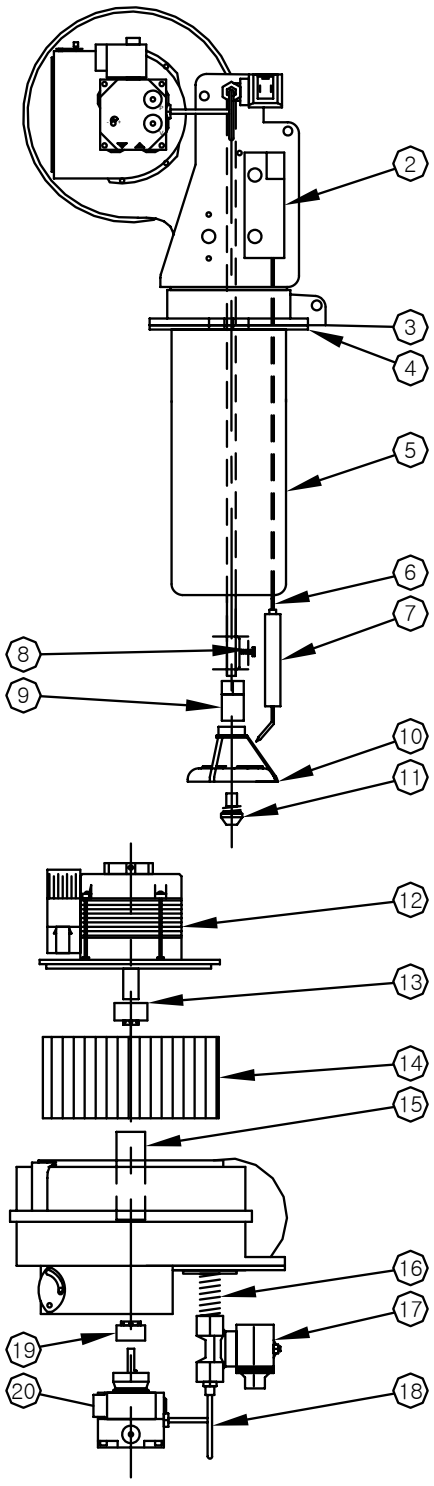

Pos. 2	Ignition transformer	57 T 4000
Pos. 3	Flange unit	77 S 4053
Pos. 4	Gasket for flange	77 S 4016
Pos. 5	Flame funnel	77 S 4051
Pos. 6	Ignition cable	77 S 4050
Pos. 7	Electrode unit	77 S 4062
Pos. 8	Electrode holder	77 S 4072
Pos. 9	Nozzle holder	64 F 4020
Pos. 10	Mixing disc	77 S 4014
Pos. 11	Oil nozzle (14kg.)	64 F 4007
Pos. 12	Motor	80 E 4013
Pos. 13	Coupling sleeve for motor	77 S 4057
Pos. 14	Impeller	77 S 4059
Pos. 15	Coupling	77 S 4055
Pos. 16	Spring for burner insert	77 S 4054
Pos. 17	Solenoid valve	87 M 4001
Pos. 18	Pressure pipe	77 S 4052
Pos. 19	Coupling sleeve for pump	77 S 4056
Pos. 20	Oil pump BPF 21L5	80 P 4176

W.O DOSING PUMP (PU-3)
PARTS LIST
W.O DOSING PUMP COMPLETE: HM80P4206

Make : HMMCO

Note:	When ordering spare parts for the sludge dosing pump please state the circulation pump No. 80P3997 together with the part Nos. described.

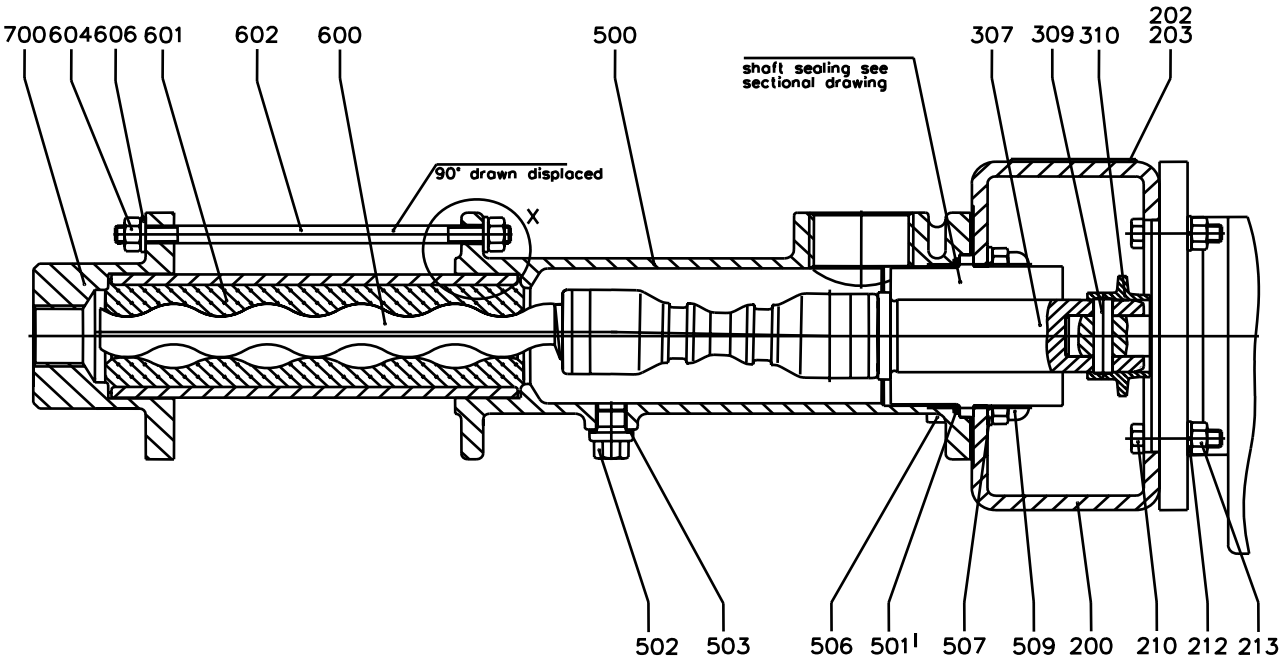

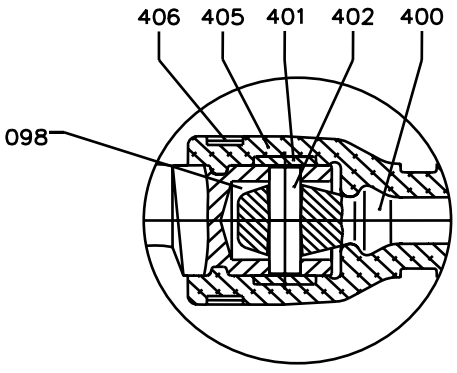

ID according to drawing:	Pieces:	Description:	Part No.: (if wear part)
Pos. 200	1	Lantern	80P3994
Pos. 202	2	Round head grooved pin	80P3993
Pos. 203	1	Type plate	
Pos. 210	4	Hexagon bolt	80P3992
Pos. 212	4	Spring washer	80P3991
Pos. 213	4	Hexagon nut	80P3990
Pos. 307	1	Plug-in shaft	80P3989
Pos. 309	1	Plug-in shaft pin	80P3988
Pos. 310	1	Splash ring	80P3987
Pos. 400	1	Coupling rod	80P3980
Pos. 401	2	Retaining sleeve	80P3985
Pos. 402	2	Coupling rod pin	80P3984
Pos. 405	1	Universal joint sleeve	80P3983
Pos. 406	1	Holding band	80P3982
Pos. 500	1	Suction casing	80P3981
Pos. 501	1	Casing gasket	80P3980
Pos. 502	3	Screwed plug	80P3979
Pos. 503	3	Sealing ring	80P3978
Pos. 506	4	Socket screw	80P3977
Pos. 507	4	Spring washer	80P3976
Pos. 509	4	Cap nut	80P3975
Pos. 600	1	Rotor	80P3995
Pos. 601	1	Stator	80P3996
Pos. 602	2	Tie bolt	80P3974
Pos. 604	4	Hexagon nut	80P3973
Pos. 606	4	Washer	80P3972
Pos. 602	2	Hexagon bolt	80P3971
Pos. 604	2	Hexagon nut	80P3970
Pos. 606	2	Washer	80P3969
Pos. 700	1	Pressure branch	80P3968
Pos. 098		**Seepex** joint grease for type and filling quantity - refer to index of operating instruction belonging to pump.	

SLUDGE BURNER (B)
LIST OF PARTS

PART NO.	DESCRIPTION	PART NO.
1	Sludge burner	20P2048
2	Housing	20P2050
3	Turbolator	20P2049

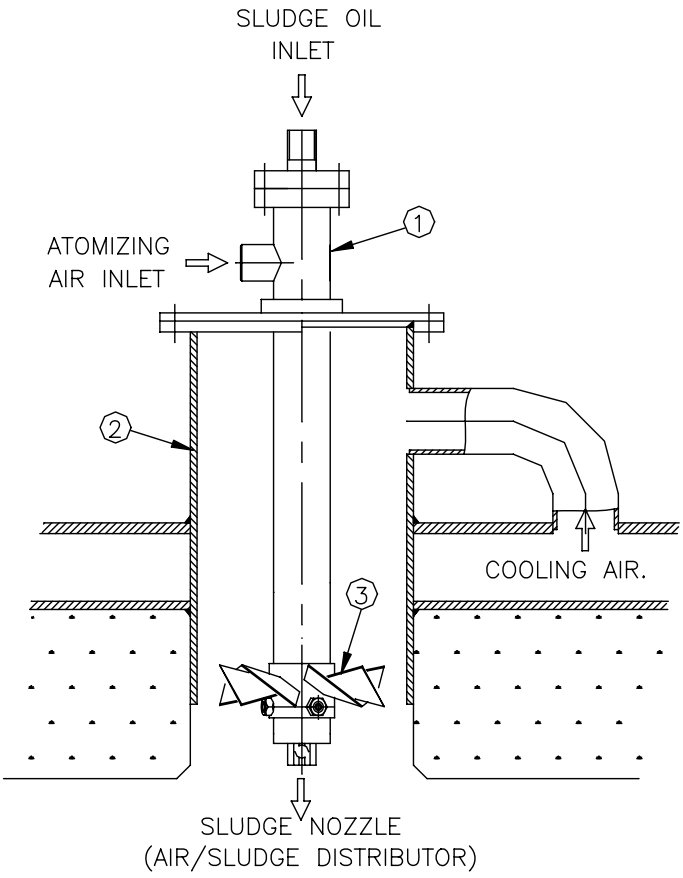

Part 7
ADDITIONAL DRAWINGS & COMPONENTS

INSTRUCTIONS FOR OPERATION
MILL PUMP (PU-5)

The mill is a centrifugal pump with the impeller equipped with knives for comminuting the contents of the sludge tank, maximum particle size of comminution 6mm.

BEFORE SETTING TO WORK

Control direction of rotating (indicate on the pump casing) should be clockwise when looking at the el-motor.

Clean tank, suction and discharge pipe for metals. If the pump is made with bayonet locking, control that the pump is properly locked in the bayonet locking.

MAINTENANCE

Check the mechanical seal for leakages, and change it if necessary.

The pump will normally work without maintenance.

As regards check-up of the universal cutter please note that the cutter blades are to be armour-plated. When they are worn out, the armour-plating must either be renewed repaired.

TECHNICAL DATA - MILL PUMP (PU-5)

Is a centrifugal pump with the impeller equipped with knives for comminution content of the sludge tank. Max. particle size after comminution 6mm.

FOR 3 X 440 V - 60 CYCL.

Capacity : 26 m^3/hr

Head : 0.4 bar

Motor : 4.6 Kw / 3580 rpm / RT = 8.26 amp / ST = 56.2 amp

MATERIAL SPECIFICATION

Pump cover :	Cast iron (GC 200)
Impeller :	Bronze castings (BC 6)
Spiral casting :	Cast iron (GC 200)
Cutter :	Bronze castings (BC 6)
Weight pump and motor :	Approx. 60 Kg

PART LIST - MILL PUMP(PU-5)

COMPLETE PART NO. : 75K4018

ITEM or POS.	COMPONENT	MATERIAL
101	PUMP CASING	GC 20
102	IMPELLER	BC 6
103	MOTOR	-
104	MOTOR BRACKET	GC 200
105	UNIVERSAL CUTTER	SS 400
106	DOUBLE MECHANICAL SEAL	SIC/SIC
107	CASING O-RING	VITON
108	SUCTION COVER O-RING	VITON
109	IMPELLER KEY	SM 45C
110	IMPELLER BOLT	SS 400
111	STUD BOLT	SS 400
112	HEX. NUT	SS 400
113	SPRING WASHER	SS 400
114	HEX. BOLT	SS 400
115	LUBRICATION	TURBINE OIL
116	HEX. BOLT	SS 400
117	SEAL COVER	GS 200
118	OIL SEAL	VITON
119	HEX. BOLT	SS400
120	SPRING WASHER	SS400
121	SEAL COVER O-RING	VITON
122	OIL GAUGE	AL

