Freescale Semiconductor
User's Guide

Document Number: HVPMC3PHUG
Rev 0, 1/2015

Freescale High-Voltage Motor Control Platform User's Guide

Contents

1 Introduction....1
2 Main board introduction.... 3
3 Setup guide.... 6
4 Design details.... 11
5 Useful tips....21
6 Controller cards.... 21

1 Introduction

Freescale's three-phase high-voltage motor control platform (HVP) is a 115/230 volt, 1000 watt, power stage that is an integral part of Freescale embedded motion control series of development tools. It is supplied in the HVP-MC3PH kit.

In combination with one of the controller cards, it provides a ready-made software development platform for more than one-horsepower off-line motors. Feedback signals allow three-phase AC induction, BLDC or PMSM motors controlled with a wide variety of algorithms. The HV AC power stage includes an active interleaved power factor correction (PFC) circuit that facilitates development of PFC algorithms.

An illustration of the system architecture is shown in Figure 1. The development platform consists of a controller card and the main board. The main board is not able to operate without a controller card.

© 2015 Freescale Semiconductor, Inc.

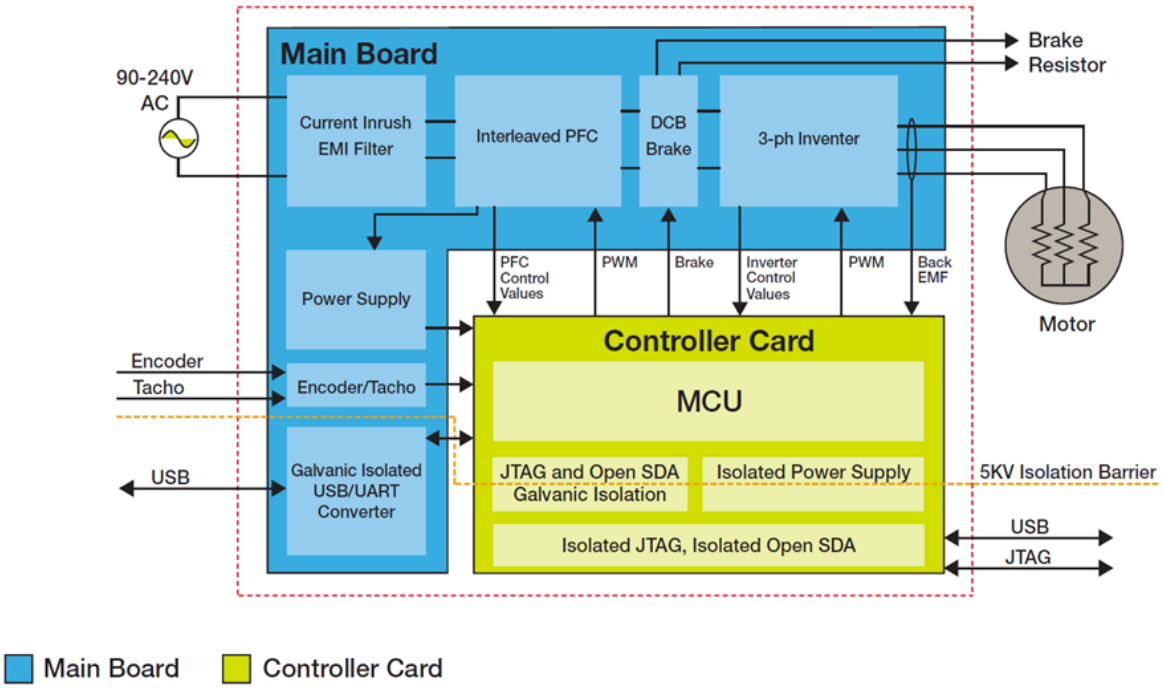

Figure 1. High-voltage motor control development platform block diagram

Warning

- This development tool set operates in an environment that includes dangerous voltages and rotating machinery that can result in electrical shock, fire hazard, and personal injury if not properly handled or applied. You must use this development tool with necessary caution and appropriate safeguards to avoid personal injury or property damage.
- Only qualified persons familiar with the risks associated with handling high voltage electrical and mechanical components, systems and subsystems can manipulate this evaluation board.
- You should operate this evaluation board in a lab environment only. The evaluation board is not a finished end-product fit for general consumer use.
- To facilitate safe operation, the input power for the high-voltage power stage should come from a current-limited laboratory power supply or isolation transformer when a power factor correction is to be investigated.
- If an isolation transformer is not used, the power stage grounds and oscilloscope grounds are at different potentials, unless the oscilloscope is floating. Note that probe grounds and, therefore, the case of a floated oscilloscope are subjected to dangerous voltages.

You must remember that:

- Before moving scope probes, making connections, and such, it is generally advisable to power down the high-voltage supply.
- You should not touch EVM or components connected to the EVM, when these components are energized.
- Avoid operation in lab set-ups that have grounded tables andvchairs.
- You are advised to wear safety glasses, use shields, and avoid ties and jewelry and operate the development tool set only if you are trained in high-voltage lab techniques.
- The heat sink, power semiconductors, the PFC coils, and the motor can reach temperatures hot enough to cause burns.
- When powering down; due to storage in the bus capacitors, dangerous voltages are present until the power-on LED is off.

2 Main board introduction

The following are the features of the main board.

- Input voltage AC: 90-240V / DC: 110-390VDC
- Output power up to 1kW
- On-board Interleaved Power Factor Correction
- Inrush limitation using an NTC + Relay
- Optical isolation 5KV for communication and debugging
- Hardware over-current, overvoltage faults
- Motor speed/position sensors interface (Encoder, Hall, Tacho generator)
- Analog sensing (input voltage, dcb voltage, dcb current, phase currents, back-EMF voltage, PFC currents, IGBT module temperature monitoring)
- Supports multiple MCU cards using the PCI Express 64
- EMI filter
- Test points
- Easy to use, safe and robust design
- CE/FCC certified

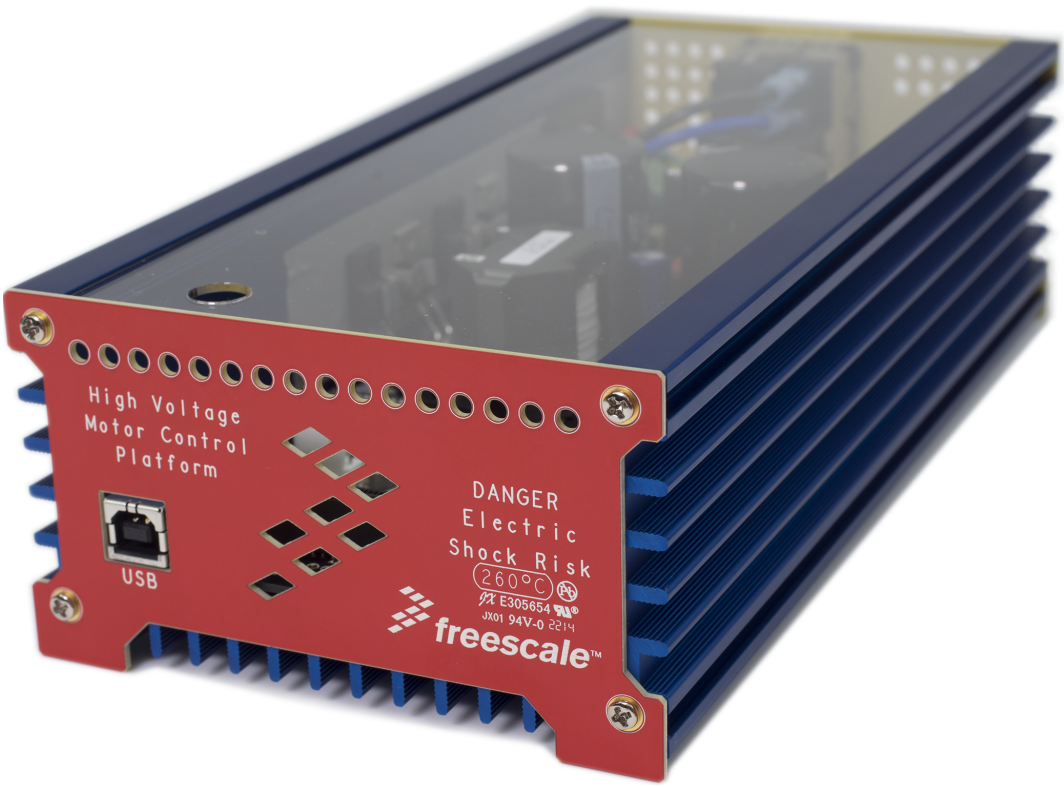

Figure 2. High-voltage platform

2.1 System architecture

Freescales's three-phase high voltage motor control platform (HVP) is a 115/230 volt, 1000 watt, power stage that is an integral part of Freescales's embedded motion control series of development tools. It is supplied in the kit HVP-MC3PH.

In combination with one of the controller cards, it provides a ready-made software development platform for more than one-horsepower off-line motors. Feedback signals are provided that allow three-phase AC induction, BLDC or PMSM motors to be controlled with a wide variety of algorithms. In addition, the HV AC power stage includes an active interleaved power factor correction (PFC) circuit that facilitates development of PFC algorithms.

An illustration of the system's architecture is shown in Figure 3. The development platform consists of a controller card and the main board. The main board is not able to operate without a controller card.

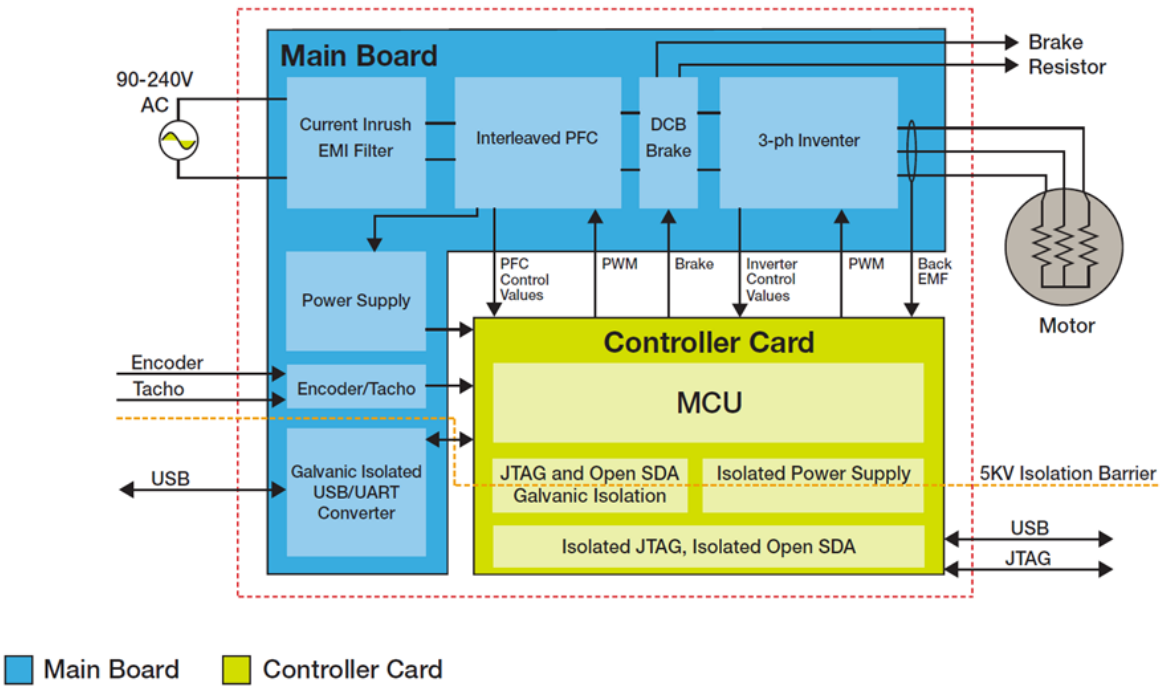

Figure 3. High voltage motor control development platform block diagram

2.2 Electrical characterstics

The electrical characteristics in the folloiwng table apply to operation at 25 ° C with a 220-Vac power supply voltage.

Table 1. Electrical characteristics

Characteristic	Symbol	Min	Typ	Max	Units
DC input voltage	Vdc	110	310	390	V
AC input voltage	Vac	90	220	240	V
Quiescent current	ICC	-	9	-	mA
Min logic 1 input voltage	VIH	2.0	-	-	V
Max logic 0 input voltage	VIL	-	-	0.8	V
Analog output range	VOut	0	-	3.3	V

Table continues on the next page...

Table 1. Electrical characteristics (continued)

Characteristic	Symbol	Min	Typ	Max	Units
Phase current measurement sensitivity	ISense	-	206.25	-	mV/A
PFC current measurement sensitivity	Ipfc_sense	-	412.5	-	mV/A
Voltage measurement sensitivity	Vsense	-	7.62	-	mV/V
Phase current offset	Iphof	-	8000	-	mA
PFCcurrent offset	Ipfcof	-	199	-	mA
Peak output current	IPK	-	-	8	A
Brake resistor output – maximal current	PBK	-	-	8	A
Maximal DC bus voltage	Umax	-	-	410	V
Total power dissipation	Pdiss	-	-	85	W

2.3 Absolute maximal ratings

Table 2. Absolute maximal ratings

Characteristic	Min	Typ	Max	Units
DC input voltage [1]	35	-	430	V
Maximal DC bus voltage [1]	-	-	430	V
Peak phase output current[-1]	-	-	15	A

1. Maximum ratings are values of voltage, current, temperature, power dissipation etc., which should not be exceeded at any time, otherwise deterioration or destruction of the components may take place. The maximum values and limits published should be taken into consideration at all times when using the HVP-MC3PH board.

2.3.1 Three-phase motor driver and PFC power ratings

Output power is limited by several factors such as temperature, current, voltage, and such. Figure 4 describes those limitations which should be considered during the work with this hardware. These limitations are valid only for the default board configuration.

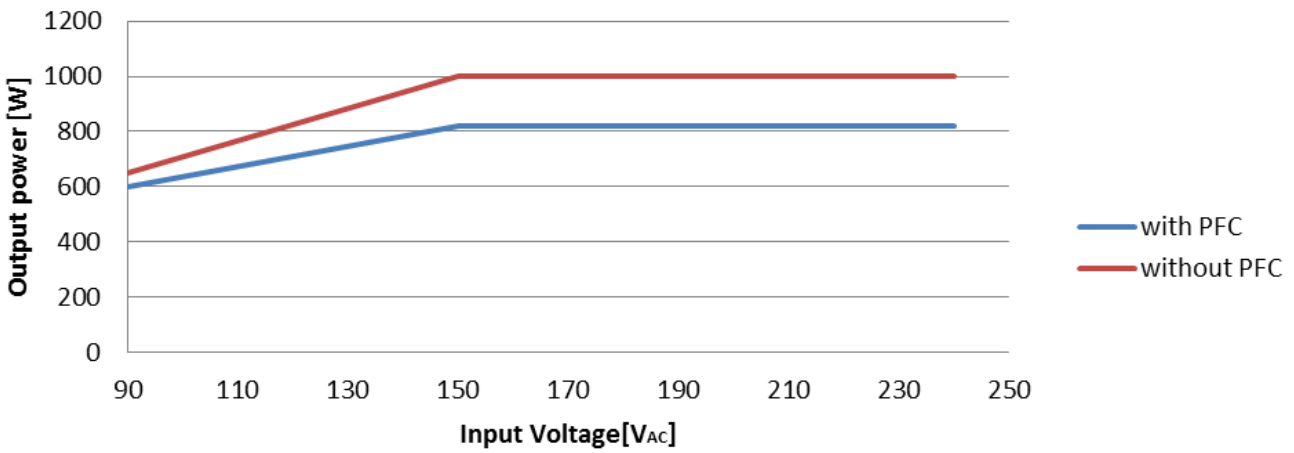

Figure 4. Limitations

3 Setup guide

The setup and connections for the HVP-MC3PH are straightforward. The power stage can be powered either by a 110- to 390-volt DC power supply or with a line voltage of 90-240V AC. For safety reasons and ease of making measurements, it is strongly recommended that a d.c. supply is used, unless power factor correction is specifically being investigated. The power supply should be current limited during a debugging to fewer than 4 amps.

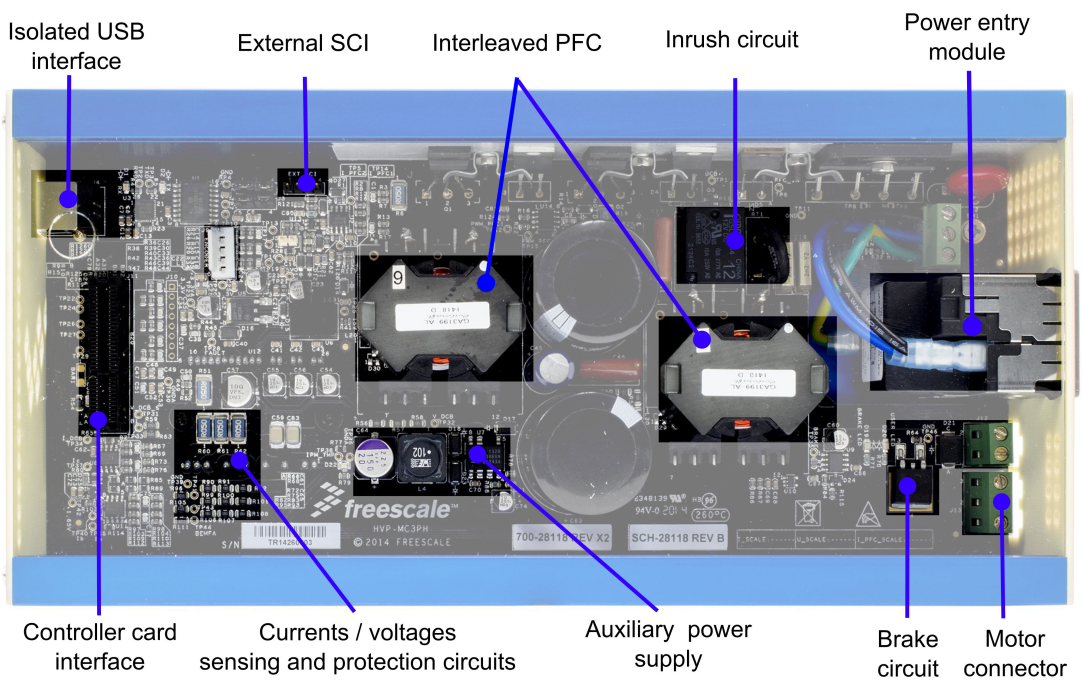

Figure 5. Completed setup

A step-by-step setup procedure is:

1. Ensure that the power is off.
2. If a direct programming using the JTAG interface is required, insert the ribbon cable from your debugger into the selected controller card.
3. Plug the controller card into the main board 64-pin PCI connector.
4. Close the lids.
5. Connect the motor leads to output connector J13, and if required, connect the DC bus brake resistor to the output connector J12.
6. Connect a line-isolated, current-limited d.c. power supply to the power input module with the IEC connector.

The input voltage range is 110- to 390-volt DC or 90-240V AC. The current limit should be set for less than 4 amps. The d.c. supply's polarity does not matter. The main board can also be supplied directly from a power line, but this should be done only for a final application to minimize risk. Regardless whether DC or AC power is used, the power is always applied to the input power connector located on the rear panel.

3.1 Main board to controller card interface description

Figure 6 illustrates the controller card connector signal deployment.

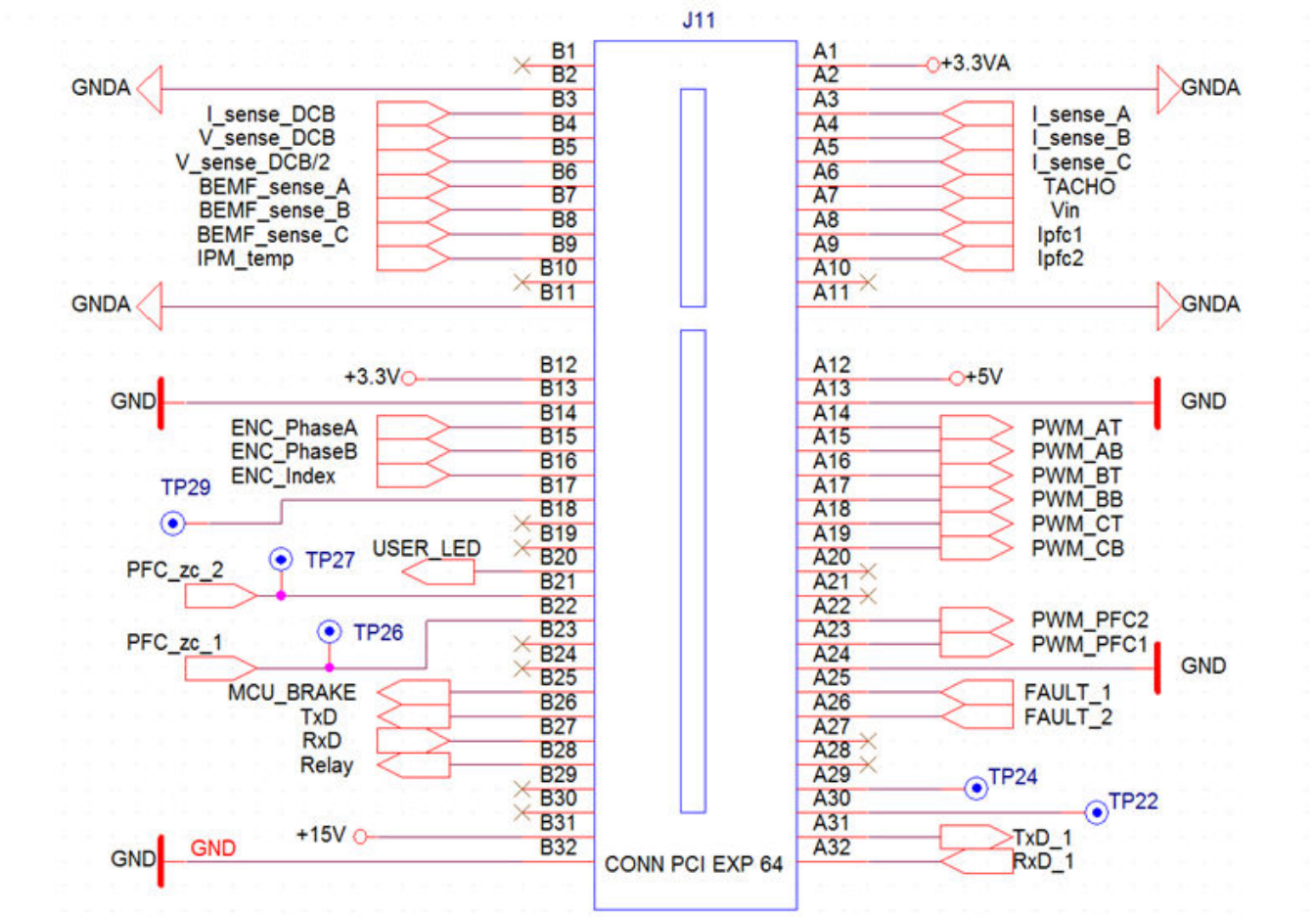

Figure 6. Controller card connector signal deployment

3.2 Communication lines

The HV platform is easy to use. The main board requires minimal jumper settings. On the main board, only jumper settings for serial communication configurations are available.

The main board is equipped with two communications lines. The first communication line utilizes a USB connector on the main board and is connected through galvanic isolation to the target controller on the controller board. The second communication line also goes from the target controller and is terminated at connector J2 on the main board. This line is not galvanic isolated and can be used for communication with an external device such as a Bluetooth module. Both communication lines can be connected either to the RxD, TxD or RxD1, TxD1 signals on the target controller via jumpers J1 and J3. For more information on which communication channels are available on the controller board see particular HVP-Controller cards user's guide. The Figure 7 shows the communication lines interconnections.

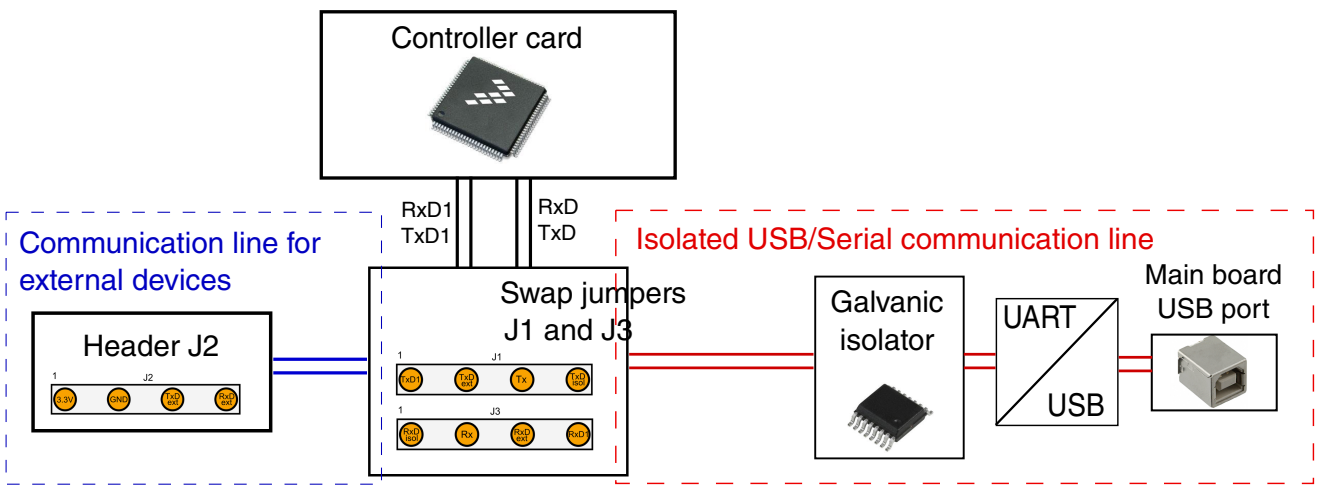

Figure 7. Communication lines

3.2.1 J1 and J3 jumper settings

The jumpers J1 and J3 allow the following user configuration of the communication lines:

- Default configuration – RxD/TxD from the target controller is connected to the main board USB-to-serial converter, - RxD1/TxD1 signals are connected to the external SCI connector (J2).

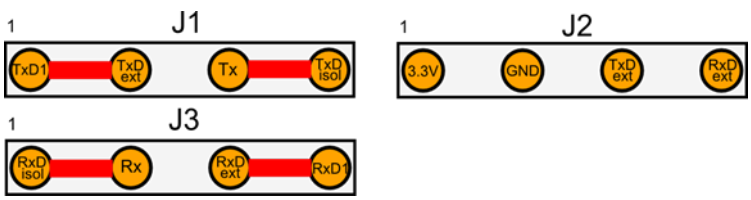

Figure 8. Jumper settings - Default configuration

- RxD1/TxD1 from the target controller is connected to main the board USB-to-serial converter and, the RxD/TxD signals are connected to the external SCI connector (J2).

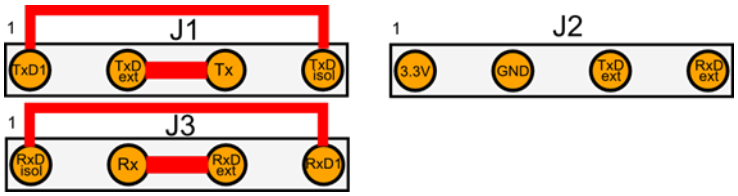

Figure 9. Jumper settings - configuration number 2

- The last configuration connects the external device on the J2 connector (for example, a Bluetooth module) to the main board USB-to-serial convertor. This mode allows connecting the host PC to the external device connected to the J2 connector, for example, for a firmware update.

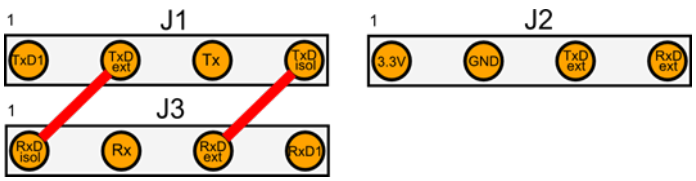

Figure 10. Jumper settings - configuration number 3

3.3 Front and rear panel

Only ventilation holes and USB B type connector are located on the front panel. The purpose of this connector is described in the section USB connector. There is a mini USB connector located on the top cover, but this connector belongs to the controller card. Thus, the description of this connector can be found in the controller card user's guide.

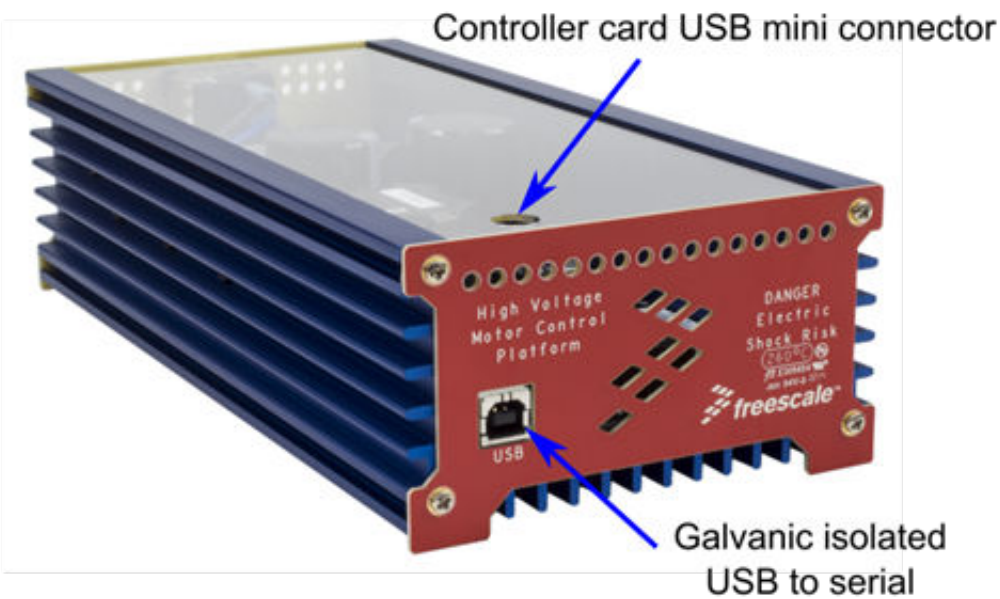

Figure 11. Front panel

The rear panel houses the power input connector, the power switch, the fuse holder, the motor connector, and the break connector. All of these connectors are described in the following sections.

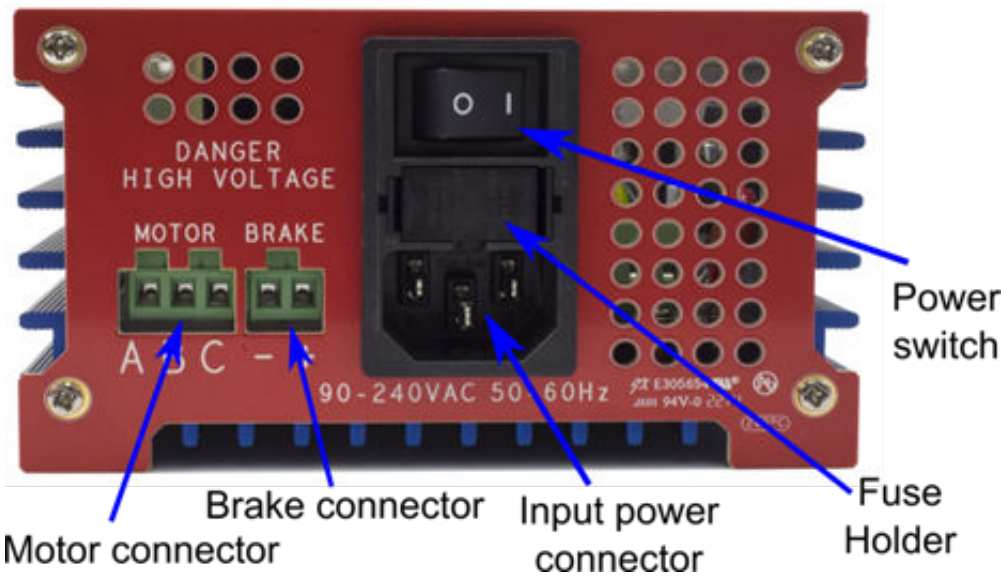

Figure 12. Rear panel

3.3.1 USB connector

The USB B female connector located on the front panel, and marked as J4, is used for serial communication with the target controller. This serial communication is galvanic isolated, so no other isolation device between the development kit and computer is needed. This port is used mainly for communication with the FreeMASTER run-time debugging tool. This interface is based on the USB-to-serial converter CP2102. To download the latest drivers, refer to the manufacturer web-sites. For more information, see section Communication lines.

3.3.2 Brake resistor connector

A brake resistor can be connected to the brake resistor connector J12. The brake resistor allows power dissipation and can be controlled through the brake control situated on pin B25 of connector J11.

3.3.3 Motor connector

Power outputs to the motor are located on connector J13. Phase outputs are labeled A, B, and C on the rear panel. The Figure contains pin assignments. For a sensorless drives, it does not matter which lead goes to which phase. For sensored drives, it is important to get the wire color coded for phase A into the connector terminal labeled Ph_A, and so on, for phase B and phase C.

3.3.4 Fuse replacement

The power entry module is equipped with a fast blow fuse F 250V/3.15A. This fuse can be changed according to the required output power, up to F8A. The fuse is located on the power entry module, on the rear panel.

To replace the fuse:

1. Remove the power and wait until all the blue power-on LEDs are off.
2. Remove the fuse holder.
3. Replace the fuse with a new one — F 250V/3.15A.
4. Insert the fuse holder into the power entry module.
5. Set the controller's speed control input to zero RPM.
6. Apply the power and resume operation.

4 Design details

This section lists the design details.

4.1 Analog measurement

This section lists the voltage, bus current, phase current measurements, and the PFC current temperature.

4.1.1 Voltage measurements

Figure 13 shows the circuitry that provides feedback signals proportional to bus voltage and bus current. Bus voltage is scaled down by a voltage divider consisting of R59, R58, R57, R56, and R63. The values are chosen such that a 433-volt bus voltage corresponds to 3.3V at output V_sense_DCB. An additional output, V_sense_DCB/2, provides the reference used in zero-crossing detection. V_dcb is scaled at 7.66mV per volt of the DC bus voltage, and connected to J11 pin B4.

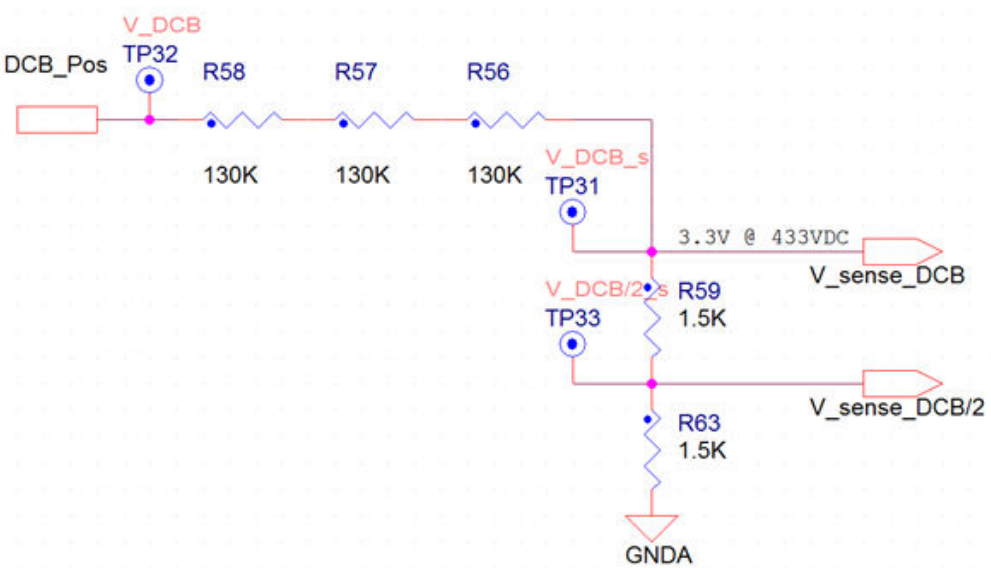

Figure 13. Voltage measurement

Similar voltage dividers are also used to measure these values:Vin – Actual value of the input voltage. Voltage is measured behind a rectifier, so only positive values can be measured here. This signal is used mainly for synchronizing with the mains and as the current reference for power factor correction. The output is connected to J11 pin A6.Phase_A_voltage , Phase_B_voltage , Phase_C_voltage – Actual values of the phase voltages. Phase voltages can be utilized for BLDC six step controls, or also for dead time compensation. The outputs are connected to the J11 pins B6, B7 and B8.

4.1.2 Bus current measurement

Bus current is sampled by resistor R51 and amplified in the U8 operational amplifier as shown in the following figure. This circuit provides a voltage output suitable for sampling with the A/D (analog-to-digital) inputs. The U8 operational amplifier is used as a differential amplifier for bus-current sensing. With R65 = R85, R66 = R68, and R67 = R69, the gain is given by:

$$A = \frac{R_{65}}{R_{69}+R_{68}}$$

Equation 1

The output voltage is shifted up by +Vref, to accommodate both positive and negative current swings. A ±400-mV voltage drop across the shunt resistor corresponds to a measured current range of ±8 amps. As the source for +Vref we use the voltage reference +1.65V. The gain of this op-amp is 4.12 with the +Vref offset, i.e. the output ±1.65V corresponds to ±8A. The output is connected to the J11 – pin B6 I_sense_DCB.

The shunt resistor is represented by a 0.050-ohm resistance SMD resistor, the same as the phase current measurement resistors.

The bus current scale can be changed by modifying the values of R65, R66, R67, R68, R85 and R69 or by replacing the shunt resistor R51. It is important to remember that the maximal power dissipation of a shunt resistor is 2W.

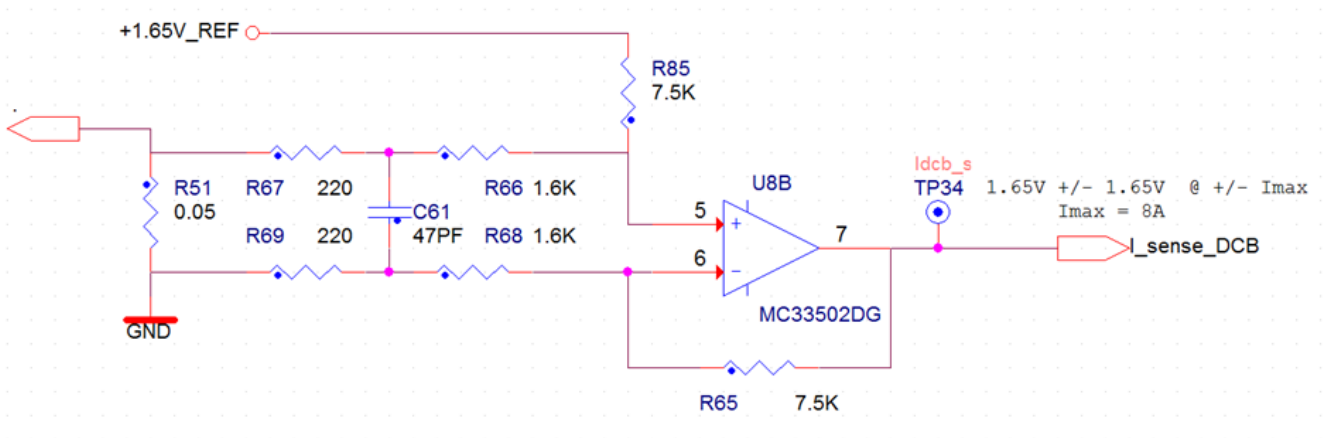

Figure 14. DC bus current measurement

4.1.3 Phase current measurements

Sampling resistors provide phase current information for all three phases. Because these resistors sample the current in the lower-phase legs, they do not directly measure the phase current. However, given the phase voltages for all three phases, the phase current can be constructed mathematically from the lower-phase leg values. This information can be used in vector-control algorithms for AC induction motors. The measurement circuitry for one phase is shown in the following figure. Referencing the sampling resistors to the negative motor rail makes the measurement circuitry straightforward and inexpensive. Current is sampled by resistor R60 and amplified by the differential amplifier U11A. This circuit provides a voltage output suitable for sampling with the A/D inputs. An MC33502D is used as a differential amplifier. With R110 = R113, R109 = R112 and R114 = R93, the gain is given by:

$$A = \frac{R_{114}}{R_{110}+R_{109}}$$

Equation 2

The input voltage is shifted up by +Vref, to accommodate both positive and negative current swings. A ±400-mV voltage drop across the shunt resistor corresponds to a measured current range of ±8 amps. As the source for +Vref, we use the voltage reference +1.65V. The gain of this op-amp is 4.12 with the +Vref offset, i.e. the output ±1.65V corresponds to ±8A. The outputs are connected to J11 pins A3, A4 and A5.

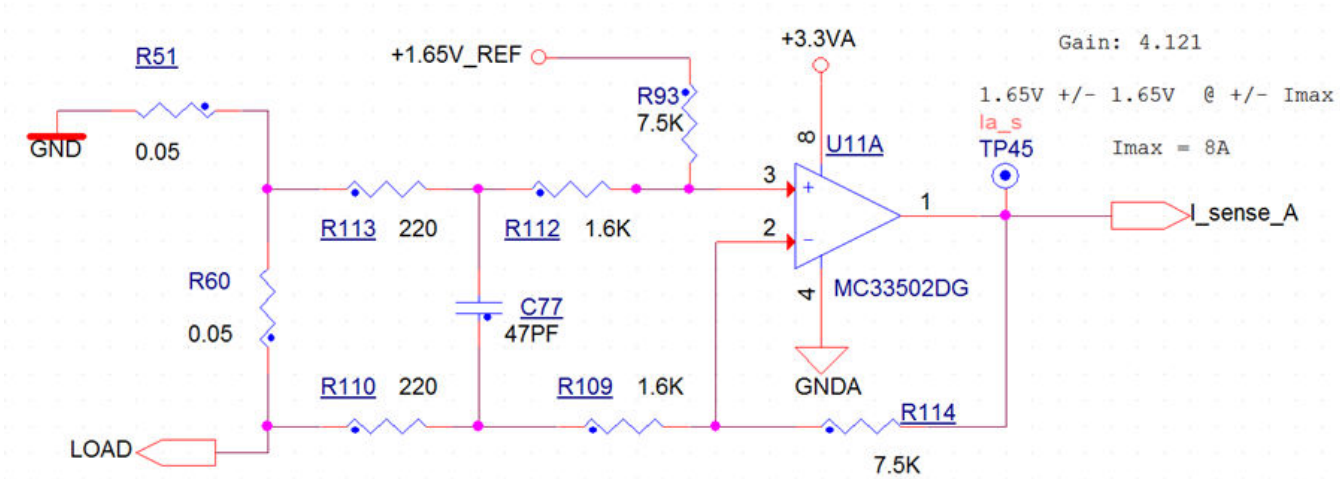

Figure 15. Phase current measurement

4.1.4 PFC current temperature

The current measurement for power factor correction is equipped with a small d.c.-voltage offset (82mV) which ensure a nonlinearity compensation of the rail-to-rail operational amplifier. This circuit also ensures that very small current amplitude can be measured. However, it is important to remember that this offset needs to be calibrated in the application.

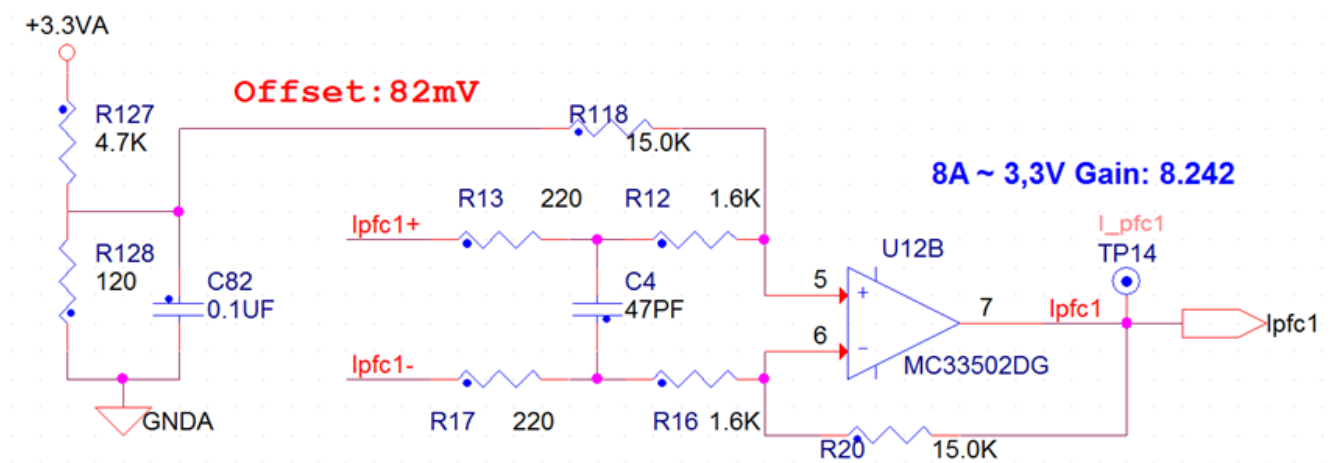

Figure 16. PFC current measurement circuit

4.2 Advanced board functionality

The board contains several circuits that prevent over-current, over-voltage and under-voltage faults. All protection circuits are used to protect the board just for a limited amount of time. User software should monitor whether any of the fault signals became active, and turn off affected active components. On this board, the fault signal is divided into two signals. The fault_1 signal is active-low, and it is used to indicate motor over-current, PFC over-current, and DC-bus under-voltage conditions. The fault_2 signal indicates over-voltage on the DC-bus and it is active-high. There is also a possibility to monitor the temperature of the three-phase IPM to prevent damage caused by over-heating.

4.2.1 Motor overcurrent

The IPM (Intelligent Power Module) has built-in short-circuit current protection that senses the voltage to the CSC pin and, if this voltage exceeds the VSC(REF) - typically 0.5V, a fault signal is asserted and all the lower-arm IGBTs are turned off. The fault_1 signal connected to J11 pin 25 is forced low to indicate a fault to the controller. Over-current protection threshold is set up at 10.5A. The bus current feedback signal is filtered by R52 and C50 to remove spikes.

4.2.2 PFC overcurrent

During the PFC overcurrent condition, PFC MOSFETs are turned off, regardless of control signal from the controller card, and fault_1 signal is forced low. Once the over-current condition disappears, the functionality of protection is restored after a short delay, and MOSFET signals are enabled again. In case the over-current condition persists and software doesn't handle the fault condition, the functionality of the protective circuit starts to be periodic. Turning the high-amplitude coil current on and off periodically can cause over-voltage conditions. Thus, it is important that the fault is handled by the controller.

4.2.3 Over-voltage protection

The board contains a connector that can be used for an external dissipating resistor. The brake resistor allows for power dissipation, and it can be controlled using the controller card, or using automatic control. If the voltage in the DC circuit exceeds 430 V, the brake resistor is activated automatically, regardless to signal from the controller card, to prevent the over-voltage condition. If the dissipating resistor is not connected, this protection cannot be used. Always use a brake resistor when the PFC or high-dynamics drives are evaluated. During an over-voltage condition, the fault_2 signal, connected to J11 pin 26, is forced high.

4.2.4 Under-voltage protection

The IPM also has a built-in UVLO (under-voltage lockout) protection for High-Side Control Bias Voltage. If this voltage is lower than 10.5 V, the IPM fault state is evaluated. The fault_1 signal, connected to J11 pin 25, is forced low to indicate a fault to the controller.

4.2.5 Temperature sensing

The IPM safety functions keep the bus current and voltage within safe limits. Current limiting by itself, however, does not necessarily ensure that a power stage is operating within safe thermal limits. The circuit consists of an NTC thermistor built into the IPM, and resistor R77 with a value of 7.5kOhm. The IPM_temp signal is fed back to the A/D input where software can be used to set the safe operating limits. The resistant temperature curve can be found in the following figure.

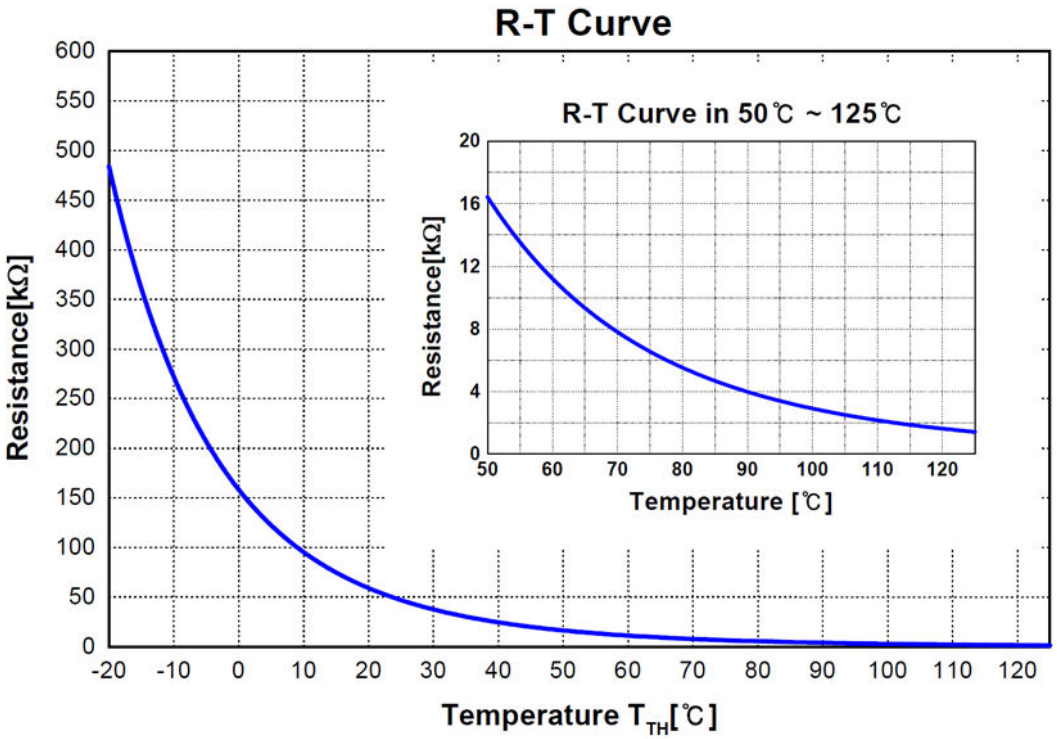

Figure 17. Resistance temperature curve

The following equation can be used to compute temperature measurement output voltage.

$$Uout = ((Rntc)/(Rntc + R77)) * 3.3$$

Equation 3

4.3 Onboard LEDs, test points, and connector tables

Table 3. LEDs

Ref. des	Name	Functionality
D22	+15V LED	LED indicating the status of the +15V branch
D19	Brake LED	LED indicating the status of the bus brake
D20	USER LED	LED indicating the application status (user configurable)
D1	Rx	LED indicating the RxD communication line status
D2	Tx	LED indicating the TxD communication line status

Table 4. Connector

Ref. des	Name	Functionality
J2	BT SCI	Connector for communication with an external device, or Wireless module
J4	USB/SCI	Galvanic isolated USB to SCI convertor, mainly for FreeMASTER communication
J5	Tacho	Tacho generator input connector
J8	Input voltage	Input line voltage
J9	Encoder	Incremental encoder or Hall sensors input connector
J11	Controller	Controller card connector
J12	Brake	Bus brake connector
J13	Motor	3phase motor connector

Table 5. Test points

Ref. des	Name	Functionality
TP2	RxD	Isolated SCI/USB communication channel
TP3	TxD	Isolated SCI/USB communication channel
TP5	Ipfc_2	PFC channel 2 current
TP6	PFC_in	Rectified input voltage
TP7	TxD_isol	SCI communication channel for external devices
TP8	L	Line voltage
TP9	N	Neutral Voltage
TP10	RxD_isol	SCI communication channel for external devices
TP12	PWM_PFC_1	PFC channel 1 gate PWM signal
TP13	ENC_A	Position sensor phase A
TP14	I_PFC_1	PFC channel 2 current
TP15	PWM_PFC_2	PFC channel 1 gate PWM signal
TP16	Tacho	Normalized tacho generator signal
TP17	ENC_B	Position sensor phase B
TP18	Vin	Input voltage sensing signal
TP19	ENC_index	Position sensor index signal
TP20	+3.3V	Digital power supply, +3.3V for logic circuits
TP21	+5V	Digital power supply, +5V for encoder and +3.3V linear regulator
TP22	TP22	General test point, functionality depends on the controller card

Table continues on the next page...

Table 5. Test points (continued)

Ref. des	Name	Functionality
TP23	+3.3VA	Analog power supply, +3.3V for analog circuits
TP24	TP24	General test point, functionality depends on thecontroller card
TP25	+15V	Digital power supply, +15V for MOS-FET pre-drivers, feeding also +5V, +3.3V and +3.3VA branches.
TP26	TP26	General test point, functionality depends on the controller card
TP27	TP27	General test point, functionality depends on the controller card
TP28	FAULT	Fault 1 signal for motor and PFC over-current, active in low
TP29	TP29	General test point, functionality depends on the controller card
TP31	V_DCB_s	Sense signal for bus voltage
TP32	V_DCB	Bus voltage
TP33	V_DCB/2_s	Sense signal for bus voltage / 2
TP34	Idcb_s	Bus current sense signal
TP35	Brake_PWM	Bus brake control signal
TP37	Ic_s	Phase C current sense signal
TP38	IPM_temp	Intelligent power module temperature monitoring
TP40	Ib_s	Phase B current sense signal
TP41	BEMF_sense_C	Phase C voltage sense signal
TP42	+1.65V_REF	Voltage reference for current measurement
TP43	BEMF_sense_B	Phase B voltage sense signal
TP44	BEMF_sense_A	Phase A voltage sense signal
TP45	Ia_s	Phase A current sense signal
TP30, 36	GNDA	Analog ground
TP4,11,39,46	GND	Digital ground

4.4 Power supplies and voltage reference

The three-phase AC/BLDC high-voltage power stage contains devices that require various voltage levels of +15V, +5V and +3.3V.

4.4.1 Input for power supply

All power supplies are served from the bus voltage. The bus can be supplied from two sources - the line input across the power bridge, or from via the PFC converter. The power source is selected automatically according to output voltage from the PFC. The power source should be able to deliver at least 8 amps.

4.4.2 +15V power supply

The +15V level is generated by means of the LNK306GN switching step-up/down converterthat generates this level from the bus voltage. This converter can supply up to 300mA. This voltage level supplies the three-phase bridge driver and brake gate driver. The +15V is directly supplied from the LNK306GN. If the LNK306P converter is operating properly, the D22 blue LED is lit .

4.4.3 +5V power supply

An important voltage level for this board is +5V. This voltage level is obtained by the R-78E5.0-0.5 switching step-down converter and can supply up to 300 mA. The +5V level is used to supply the incremental encoder and the +3.3V linear regulator. It is connected to the connector J11, pin A12.

4.4.4 +3.3V and +3.3VA power supplies

The +3.3V branch is supplied by the MC33269DT-3.3G and can supply up to 200 mA. The +3.3V branch is divided by L1 into a digital and analog supply. In the analog branch, +3.3VA feeds the operational amplifiers, the +1.65V voltage reference, the temperature-measuring circuit and tacho generator. The digital branch feeds all the logic circuits. The +3.3V is connected to the connector J11 pin B12 and the +3.3VA is connected to pin A1.

4.4.5 +1.65V reference

The +1.65Vreference is generated from the +3.3VA level by means of the LM4041 linear voltage reference. This reference serves to shift the phase-current-sensing values. It can deliver up to 12 mA.

4.5 Power distribution

Several power options are supported by this development platform. This section describes the power distribution of the +15V, +5V +3.3V, +3.3VA power supplies and its limitations in each mode.

4.5.1 Powering the galvanic isolator

If an external debug tool is connected to the isolated JTAG connector, the +3.3V power supply should be provided by this debug tool. If the external tool is not able to provide power for the galvanic isolator, this power can be delivered using a mini-USB connector to ensure power for the galvanic isolated side.

4.5.2 Power options

Developing a motor control application can be quite dangerous if high-voltage circuits are powered from the beginning of the development. Therefore, the user has several options on how to power the main board and controller card:

- **Stand alone controller card operation** - This power option can be used for developing and testing algorithms with the controller card only. During standalone operation, the controller card is powered by its mini-USB connector and power to the non-isolated side is provided by an integrated 5KV isolated power supply.

  Since the digital and analog powers are not linked together, none of the analog circuits of the controller card are functional. To enable analog power supply, see the controller card user guide.

- **Main board powered from the controller card** - Before powering the high-voltage power circuits during application development, it is always good to check the functionality of the PWM signals and analog measurement. To ensure, for example, that dead time insertion is working properly, and the analog and PWM channels aren't swapped, this mode is ideal.

  In this mode, the controller card is inserted into the main board but is still powered from the mini-USB connector, as in the previous case. This mode allows checking all those main board circuits powered from 3.3V and 3.3VA. Please note, that all the main board circuits are powered by controller the board only, therefore, the total consumption is limited to 90mA.

  Signals available in this mode:

  - Motor PWM signals
  - PFC PWM signals
  - Analog measurements
  - USB/UART galvanic isolated interface
  - Tacho interface

  Signals not available in this mode:

  - Encoder/Hall interface
  - External SCI interface
  - Inrush relay control
  - DCB brake
  - Main board user LED
  - All other circuit powered from +5V, +15V and from the mains
- **Main board and controller card powered from the mains** - This is the standard operational mode. In this mode, all the circuits are powered from the main power entry. All circuits are powered, so the user should be very careful when operating in this mode.

4.6 Current inrush circuit

The inrush circuit is used during the powering of highvoltage circuits. It is based on the (NTC) Thermistor RT1 and the shorting relay K1. Before powering the power circuits, the DCbus capacitors are usually discharged. To avoid a huge current pulse when the power is connected, the RT1 limits the current to a reasonable value. This protects from melting the fuse, input filter, rectifier and the output capacitors from current shock. Immediately after the output capacitors are charged, the relay must short RT1 to avoid overheating. This should be done by the user once the DCbus voltage achieves 80% of nominal value, usually in the time range 0.3 – 3 seconds after power is applied.

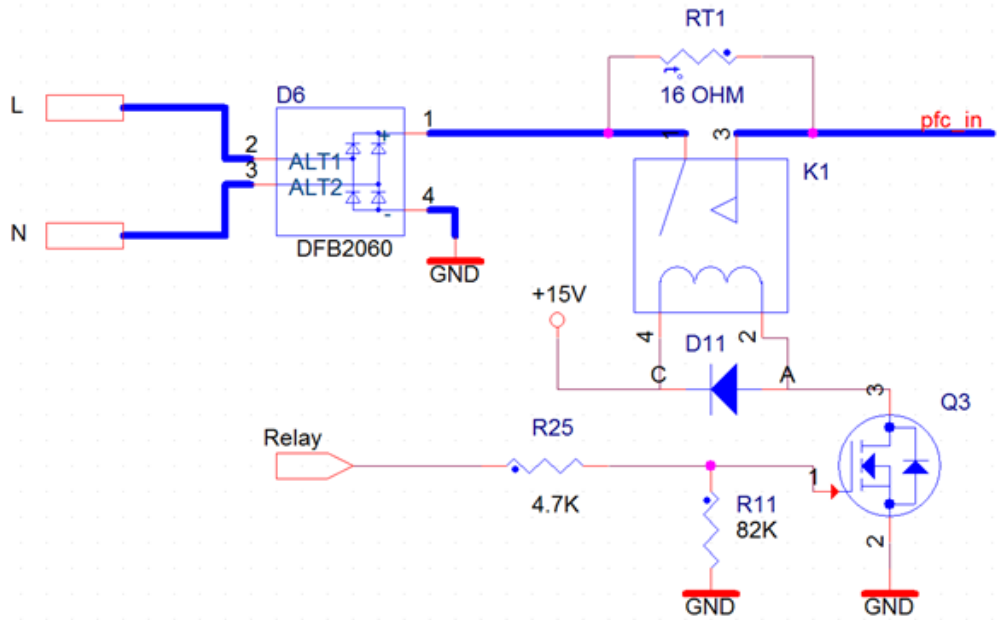

Figure 18. Current inrush circuit

4.7 Interleaved power factor connector

The whole board is powered from the power line connected to the input connector J8 (see the detailed schematic). The input filter provides the attenuation of the high frequency noise generated by the PFC stage.

The PFC stage is based on the boost converter, and it works in the interleaved topology. The controller measures the currents in the both PFC legs, input voltage and the DCBus voltage. It maintains a stable level of the DCBus voltage and the sine shape of the input current from the power line. The topology of the whole PFC convertor is shown in the following figure.

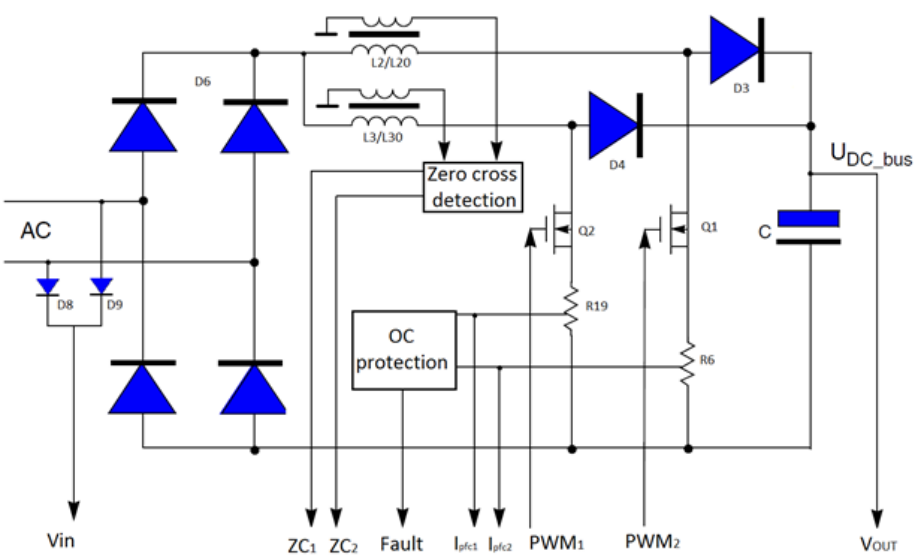

Figure 19. PFC stage diagram

4.7.1 Reconfiguring the hardware to critical and discontinuous conduction modes

In the default configuration, the convertor is equipped with coils for the average current control mode. To evaluate a critical conduction control mode, coils L2 and L3 must be replaced by type PFC3125ER-301K05B-00 (by TDK) and components D29, D30, R129, R130, R131, R133, R134, R135, R136 must be populated according to the schematic.

5 Useful tips

1. Always configure a fault in your controller. Automatic fault execution is really important.
2. Evaluate your software before you powering highvoltage circuits. See section Power options. It can prevent you from destroying your board.
3. Do not forget to use the inrush circuits properly. See section Current inrush circuit
4. An isolation transformer can protect both you and your hardware.
5. The J12 and J13 connectors are assembled by screw terminal blocks. Using alternative plug in terminal block connectors, connecting and disconnecting wires can be much more comfortable.
6. For operation in an environment with a higher ambient temperature, it is recommended to use an externally powered fan. This fan can be easily mounted by inserting M4 nuts into the heat sink side slots.

6 Controller cards

The Freescale high-voltage motor control platform is compatible with several controller cards. A detailed description of the controller cards can be found in a separate user's guide for the HVP-Controller cards.

How to Reach Us:

Home Page:
freescale.com

Web Support:
freescale.com/support

Information in this document is provided solely to enable system and software implementers to use Freescale products. There are no express or implied copyright licenses granted hereunder to design or fabricate any integrated circuits based on the information in this document. Freescale reserves the right to make changes without further notice to any products herein.

Freescale makes no warranty, representation, or guarantee regarding the suitability of its products for any particular purpose, nor does Freescale assume any liability arising out of the application or use of any product or circuit, and specifically disclaims any and all liability, including without limitation consequential or incidental damages. “Typical” parameters that may be provided in Freescale data sheets and/or specifications can and do vary in different applications, and actual performance may vary over time. All operating parameters, including “typicals,” must be validated for each customer application by customer's technical experts. Freescale does not convey any license under its patent rights nor the rights of others. Freescale sells products pursuant to standard terms and conditions of sale, which can be found at the following address: freescale.com/SalesTermsandConditions.

Freescale and the Freescale logo are trademarks of Freescale Semiconductor, Inc., Reg. U.S. Pat. & Tm. Off. All other product or service names are the property of their respective owners.

© 2015 Freescale Semiconductor, Inc.

Document Number HVPMC3PHUG
Revision 0, 1/2015

Mouser Electronics

Authorized Distributor

Click to View Pricing, Inventory, Delivery & Lifecycle Information:

Freescale Semiconductor:

HVP-MC3PH