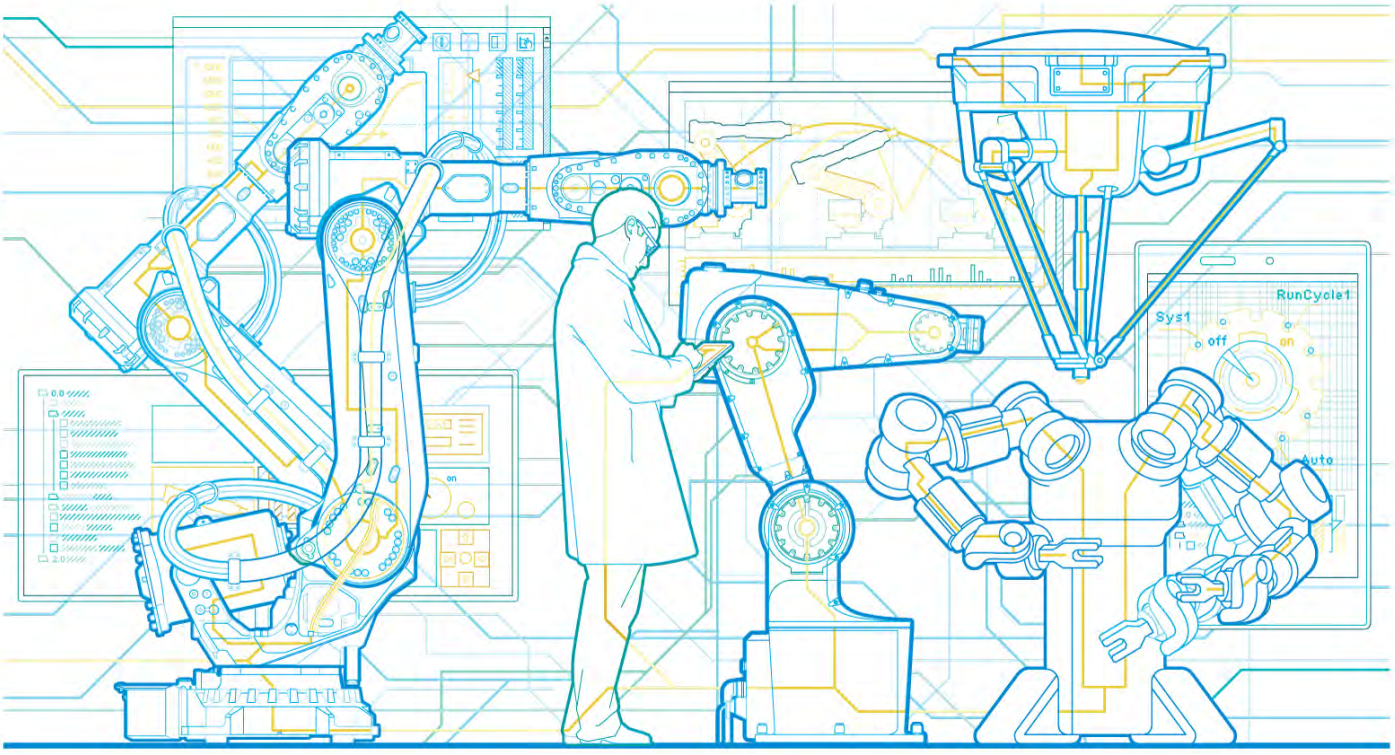

Product manual
IRB 1200

Trace back information:
Workspace R17-1 version a7
Checked in 2017-03-22
Skribenta version 5.1.011

Product manual

IRB 1200-5/0.9
IRB 1200-5/0.9 type A
IRB 1200-5/0.9 type B
IRB 1200-7/0.7
IRB 1200-7/0.7 type A
IRB 1200-7/0.7 type B

IRC5

Document ID: 3HAC046983-001

Revision: E

© Copyright 2014 - 2017 ABB. All rights reserved.

The information in this manual is subject to change without notice and should not be construed as a commitment by ABB. ABB assumes no responsibility for any errors that may appear in this manual.

Except as may be expressly stated anywhere in this manual, nothing herein shall be construed as any kind of guarantee or warranty by ABB for losses, damages to persons or property, fitness for a specific purpose or the like.

In no event shall ABB be liable for incidental or consequential damages arising from use of this manual and products described herein.

This manual and parts thereof must not be reproduced or copied without ABB's written permission.

Keep for future reference.

Additional copies of this manual may be obtained from ABB.

Original instructions.

© Copyright 2014 - 2017 ABB. All rights reserved.

ABB AB, Robotics
Robotics and Motion
Se-721 68 Västerås
Sweden

Table of contents

Overview of this manual 9
Product documentation, IRC5 13
How to read the product manual 15

1 Safety 17

1.1 Introduction to safety information 17
1.2 General safety information 18
1.2.1 Introduction to general safety information 18
1.2.2 Safety in the manipulator system 19
1.2.3 Protective stop and emergency stop 21
1.2.4 Safety risks 22
1.2.4.1 Safety risks during installation and service work on robots 22
1.2.4.2 CAUTION - Hot parts may cause burns! 25
1.2.4.3 Safety risks related to tools/work pieces 26
1.2.4.4 Safety risks related to pneumatic/hydraulic systems 27
1.2.4.5 Safety risks during operational disturbances 28
1.2.4.6 Risks associated with live electric parts 29
1.2.5 Safety actions 31
1.2.5.1 Safety fence dimensions 31
1.2.5.2 Fire extinguishing 32
1.2.5.3 Emergency release of the robot arm 33
1.2.5.4 Brake testing 34
1.2.5.5 Risk of disabling function "Reduced speed 250 mm/s" 35
1.2.5.6 Safe use of the jogging device 36
1.2.5.7 Work inside the working range of the robot 37
1.2.5.8 Signal lamp (optional) 38
1.3 Safety signals and symbols 39
1.3.1 Safety signals in the manual 39
1.3.2 Safety symbols on product labels 41
1.4 Safety related instructions 47
1.4.1 DANGER - Moving robots are potentially lethal! 47
1.4.2 DANGER - First test run may cause injury or damage! 48
1.4.3 DANGER - Make sure that the main power has been switched off! 49
1.4.4 WARNING - The unit is sensitive to ESD! 50
1.4.5 WARNING - Safety risks during handling of batteries 52
1.4.6 WARNING - Safety risks during work with gearbox lubricants (oil or grease) 53

2 Installation and commissioning 55

2.1 Introduction 55
2.2 Unpacking 56
2.2.1 Extra O-rings for protection class IP67 and protection type Foundry Plus 56
2.2.2 Protection covers 58
2.2.3 Transportation bracket 59
2.2.4 Pre-installation procedure 62
2.2.5 Dimensions 66
2.2.6 Working range 68
2.2.7 Risk of tipping/stability 71
2.3 On-site installation 73
2.3.1 Lifting robot with roundslings 73
2.3.2 Lifting and turning a suspended mounted robot 77
2.3.3 Manually releasing the brakes 78
2.3.4 Orienting and securing the robot 81
2.3.5 Setting the system parameters for a suspended or tilted robot 85
2.3.6 Loads fitted to the robot, stopping time and braking distances 90
2.3.7 Fitting of equipment on the robot 91
2.3.7.1 Introduction to fitting of equipment 91

© Copyright 2014 - 2017 ABB. All rights reserved.

2.3.7.2 Holes for fitting extra equipment 92
2.4 Installation of options 96
2.4.1 Installing the signal lamp 96
2.5 Making robot ready for operation 99
2.5.1 Additional installation procedure, Clean Room 99
2.6 Electrical connections 100
2.6.1 Robot cabling and connection points 100

3 Maintenance 105

3.1 Introduction 105
3.2 Maintenance schedule 106
3.2.1 Specification of maintenance intervals 106
3.2.2 Maintenance schedule 107
3.3 Inspection activities 109
3.3.1 Inspecting the robot cabling 109
3.3.2 Inspecting the information labels 110
3.3.3 Inspecting mechanical stops 115
3.3.4 Inspecting timing belts 118
3.3.5 Inspecting the signal lamp (option) 121
3.4 Replacement/changing activities 123
3.4.1 Replacing the battery pack 123
3.5 Cleaning activities 133
3.5.1 Cleaning the IRB 1200 133

4 Repair 137

4.1 Introduction 137
4.2 General procedures 138
4.2.1 Replacing parts on the robot 138
4.2.2 Mounting instructions for seals 140
4.2.3 Sealing differences depending on protection class 142
4.2.4 Swing sealing plug for Clean Room robots and robots with food grade lubrication 143
4.3 Cable harness 147
4.3.1 Replacing the main cable package 147
4.3.2 Replacing the axis-4 FPC unit, housing extender unit and housing extender sealings 216
4.3.3 Replacing the axis-5 FPC unit 247
4.3.4 Replacing the EIB/SMB unit 259
4.4 Upper and lower arms 275
4.4.1 Replacing the lower arm 275
4.4.2 Replacing the signal lamp 339
4.4.3 Replacing the tubular spare parts 342
4.4.4 Replacing the axis-3 radial sealing and sealing ring 374
4.4.5 Replacing the axis-2 mechanical stop 405
4.4.6 Replacing the axis-3 mechanical stop 408
4.4.7 Replacing the axis-4 mechanical stop 411
4.5 Swing and base 442
4.5.1 Replacing the base spare parts (base, axis-1 radial sealing, protection sleeve) 442
4.5.2 Replacing the swing spare parts (swing, axis-2 radial sealing) 518
4.5.3 Replacing the axis-1 mechanical stop 580
4.6 Motors and gearboxes 583
4.6.1 Replacing the axis-1 gear unit 583
4.6.2 Replacing the axis-2 drive unit 584
4.6.3 Replacing the axis-3 drive unit 605
4.6.4 Replacing the axis-4 gearbox, drive shaft and pulley 626
4.6.5 Replacing the axis-4 motor with pulley 669
4.6.6 Replacing the axis-4 timing belt 680
4.6.7 Replacing the axis-5 motor with pulley 695
4.6.8 Replacing the axis-5 timing belt 705
4.6.9 Replacing the axis-5 and axis-6 drive unit 711

© Copyright 2014 - 2017 ABB. All rights reserved.

5 Calibration 733

5.1 Introduction to calibration ... 733
5.1.1 Introduction and calibration terminology ... 733
5.1.2 Calibration methods ... 734
5.1.3 When to calibrate ... 736
5.2 Synchronization marks and axis movement directions ... 737
5.2.1 Synchronization marks and synchronization position for axes ... 737
5.2.2 Calibration movement directions for all axes ... 738
5.3 Updating revolution counters ... 739
5.4 Calibrating with Axis Calibration method ... 742
5.4.1 Description of Axis Calibration ... 742
5.4.2 Calibration tools for Axis Calibration ... 745
5.4.3 Installation locations for the calibration tools ... 747
5.4.4 Axis Calibration - Running the calibration procedure ... 749
5.5 Calibrating with manual calibration method ... 757
5.5.1 Manual calibration method - calibration position ... 757
5.5.2 Manual calibration method - content of calibration toolkit 3HAC051256-001 ... 758
5.5.3 Manual calibration method - calibrating axis 1 ... 759
5.5.4 Manual calibration method - calibrating axis 2 ... 766
5.5.5 Manual calibration method - calibrating axis 3 ... 770
5.5.6 Manual calibration method - calibrating axis 4 ... 775
5.5.7 Manual calibration method - calibrating axis 5 and axis 6 ... 781
5.6 Verifying the calibration ... 785
5.7 Checking the synchronization position ... 786

6 Decommissioning 787

6.1 Introduction ... 787
6.2 Environmental information ... 788
6.3 Scrapping of robot ... 789

7 Robot description 791

7.1 Type A of IRB 1200 ... 791
7.2 Type B of IRB 1200 ... 792
7.3 Description of spare part versions ... 793
7.3.1 Spare part versions for the base on IP40/IP67 robots ... 793
7.3.2 Spare part versions for the swing on IP40/IP67 robots ... 795
7.3.3 Spare part versions for the axis-1 sealing ring on IP40/IP67 robots ... 797
7.3.4 Spare part versions for the housing on Type A robots ... 798
7.3.5 Spare part versions for the tubular on Type A robots ... 799
7.3.6 Spare part versions for the tubular cover on Clean Room robots ... 800

8 Reference information 801

8.1 Introduction ... 801
8.2 Applicable standards ... 802
8.3 Unit conversion ... 804
8.4 Screw joints ... 805
8.5 Weight specifications ... 807
8.6 Standard toolkit ... 808
8.7 Special tools ... 809
8.8 Lifting accessories and lifting instructions ... 812

9 Spare parts 813

9.1 Spare part lists and illustrations ... 813

10 Circuit diagrams 815

10.1 Circuit diagrams ... 815

© Copyright 2014 - 2017 ABB. All rights reserved.

Index 817

© Copyright 2014 - 2017 ABB. All rights reserved.

Overview of this manual

About this manual

This manual contains instructions for:

- mechanical and electrical installation of the robot
- maintenance of the robot
- mechanical and electrical repair of the robot.

Usage

This manual should be used during:

- installation, from lifting the robot to its work site and securing it to the foundation, to making it ready for operation
- maintenance work
- repair work and calibration.

Who should read this manual?

This manual is intended for:

- installation personnel
- maintenance personnel
- repair personnel.

Prerequisites

Maintenance/repair/installation personnel working with an ABB Robot must:

- be trained by ABB and have the required knowledge of mechanical and electrical installation/repair/maintenance work.

Organization of chapters

The manual is organized in the following chapters:

Chapter	Contents
Safety, service	Safety information that must be read through before performing any installation or service work on robot. Contains general safety aspects as well as more specific information on how to avoid personal injuries and damage to the product.
Installation and commissioning	Required information about lifting and installation of the robot.
Maintenance	Step-by-step procedures that describe how to perform maintenance of the robot. Based on a maintenance schedule that may be used to plan periodical maintenance.
Repair	Step-by-step procedures that describe how to perform repair activities of the robot. Based on available spare parts.
Calibration	Calibration procedures and general information about calibration.
Decommissioning	Environmental information about the robot and its components.
Reference information	Useful information when performing installation, maintenance or repair work. Includes lists of necessary tools, additional documents, safety standards, etc.

Continues on next page

© Copyright 2014 - 2017 ABB. All rights reserved.

Continued

Chapter	Contents
Spare parts and exploded views	Reference to the spare part list for the robot.
Circuit diagram	Reference to the circuit diagram for the robot.

References

Documentation referred to in the manual, is listed in the table below.

Document name	Document ID
Product manual, spare parts - IRB 1200	*3HAC046984-001*
Product specification - IRB 1200	*3HAC046982-001*
Operating manual - General safety information [i]	*3HAC031045-001*
Circuit diagram - IRB 1200	*3HAC046307-003*
Product manual - IRC5	*3HAC021313-001*
Product manual - IRC5 Compact	*3HAC047138-001*
Operating manual - IRC5 with FlexPendant	*3HAC050941-001*
Technical reference manual - Lubrication in gearboxes	*3HAC042927-001*
Technical reference manual - System parameters	*3HAC050948-001*

[i] This manual contains all safety instructions from the product manuals for the manipulators and the controllers.

Revisions

Revision	Description
-	First edition.
A	Changes made in this revision: • Information added about removal of axis-4 mechanical stop and axis-4 FPC unit from housing extender unit, prior to replacing the radial sealing at the housing extender unit. See *Replacing the axis-4 FPC unit, housing extender unit and housing extender sealings on page 216*. • Information added about disconnecting and reconnecting the air hoses at the tubular, when replacing the axis-4 timing belt. See *Replacing the axis-4 timing belt on page 680*. • Information added about removing screws that fasten the fix sheet to the inner plastic guide inside housing, when removing axis-3 drive unit, see *Creating space for separation of upper and lower arm on page 610*. Information also added about refitting the same screws, throughout complete manual. • Information added about releasing the holding brakes prior to rotating axes manually, in calibration procedures, chapter *Calibration on page 733*. • Working range of axis 6 corrected from ±360° to ±400°, see *Working range on page 68*. • Information added about extra o-rings that are enclosed with the robot at delivery, see *Installation of extra O-ring for protection class IP67 and protection type Foundry Plus on page 82* and *Installation of extra O-ring for protection class IP67 and protection type Foundry Plus on page 101*. Also added to repair procedures, where needed. • Changed pin number for 24V connection, see *Manually releasing the brakes on page 78*.

Continues on next page

© Copyright 2014 - 2017 ABB. All rights reserved.

Revision	Description
B	Changes made in this revision: • Information regarding how to read the procedures in this product manual are updated, see *How to read the product manual on page 15*. • Information added about protection covers for water and dust proofing, see *Protection covers on page 58*. • Information added about transportation bracket that is used during shipping and transport and must be removed before lifting the robot, see *Transportation bracket on page 59* and *Attaching the roundslings on page 73*. • Timing belt tension of axis-4 and axis-5 motors changed from 13 N and 15 N to 26 N and 30 N, respectively, in repair procedures, chapter *Repair on page 137*. • Tightening torque of M3 screws used on plastic materials changed from 1.5 Nm to 0.3 Nm, in repair procedures, chapter *Repair on page 137*. • Total amount of harmonic grease 4B No.2 changed from 42 g to 32 g, see *Replacing the axis-3 drive unit on page 605*. • Information added about checking PTFE film before refitting the cable housing cover, see *Replacing the EIB/SMB unit on page 259*, *Replacing the axis-2 drive unit on page 584*, *Replacing the axis-3 drive unit on page 605*, and *Replacing the axis-4 timing belt on page 680*. • No need to remove and refit cable bracket when removing and refitting the cable package to the axis-1 sealing ring, see *Replacing the main cable package on page 147*. • No need to remove and refit connector plate when removing and refitting the axis-5 motor with pulley, see *Replacing the axis-4 FPC unit, housing extender unit and housing extender sealings on page 216*, *Replacing the axis-4 gearbox, drive shaft and pulley on page 626*, *Replacing the axis-5 motor with pulley on page 695*. • No need to remove and refit mechanical stop screw when removing the axis-4 mechanical stop, see *Replacing the axis-4 mechanical stop on page 411*. • Information modified about replacing motor bracket together with motor flange when removing and refitting the axis-4 motor, see *Replacing the axis-4 gearbox, drive shaft and pulley on page 626* and *Replacing the axis-4 motor with pulley on page 669*. • No need to remove tilt covers when replacing axis-5 drive unit, see *Replacing the axis-5 and axis-6 drive unit on page 711*.

Continues on next page

© Copyright 2014 - 2017 ABB. All rights reserved.

Continued

Revision	Description
C	Changes made in this revision • Flange sealing changed from *12340011-116 Loctite 574* to *3HAC026759-002 Sikaflex-521FC* for small cover on the housing, see *Replacing the axis-4 FPC unit, housing extender unit and housing extender sealings on page 216*. • Tightening torque for attachment screws on lifting accessories is changed from 40 Nm to 15 Nm. • Tightening torque for lower arm cable • Tightening torque for the axis-4 FPC unit attachment screws is changed from 1.5 Nm to 0.3 Nm. • Added a tightening torque for the attachment screws of the axis-1 calibration stop pin and the axis-1 calibration pin. • Added a caution note to keep a straight line when fitting the axis-1 calibration pin. • Article number of grease harmonic grease 4B No. 2 changed from 3HAC031695-001 to 3HAC037302-001. • Total amount of harmonic grease 4B No.2 for axis 2 and axis 5 changed from 80 g and 12 g to 60 g and 9 g, respectively, • Maximum revolution of axis 6 corrected to ±242°, see *Working range on page 70*. • Clean Room option added. • Food grade lubrication option added. • Spare part numbers for several gaskets (IP67) updated. • The base, the swing and the axis-1 sealing ring are updated due to IP67 improvements
D	Published in release R16.2. The following updates are done in this revision: • New standard calibration method introduced (Axis Calibration). See *Calibration on page 733*. • Information about grounding point is added, see *Grounding and bonding point on manipulator on page 101*. • Foundry Plus option added.
E	Published in release R17.1. The following updates are done in this revision: • A new standard IEC 61340-5-1:2010 added. See *Applicable standards on page 802*. • V-ring on axis-1 sealing ring version 3HAC058568-001 added as a spare part. • Notes added for spare part versions. See *Description of spare part versions on page 793*. • Information about Type B robots supporting SafeMove 2 added. • Plug on base added to options IP67 and Foundry Plus.

© Copyright 2014 - 2017 ABB. All rights reserved.

Product documentation, IRC5

Categories for user documentation from ABB Robotics

The user documentation from ABB Robotics is divided into a number of categories. This listing is based on the type of information in the documents, regardless of whether the products are standard or optional.

All documents listed can be ordered from ABB on a DVD. The documents listed are valid for IRC5 robot systems.

Product manuals

Manipulators, controllers, DressPack/SpotPack, and most other hardware is delivered with a **Product manual** that generally contains:

- Safety information.
- Installation and commissioning (descriptions of mechanical installation or electrical connections).
- Maintenance (descriptions of all required preventive maintenance procedures including intervals and expected life time of parts).
- Repair (descriptions of all recommended repair procedures including spare parts).
- Calibration.
- Decommissioning.
- Reference information (safety standards, unit conversions, screw joints, lists of tools).
- Spare parts list with exploded views (or references to separate spare parts lists).
- Circuit diagrams (or references to circuit diagrams).

Technical reference manuals

The technical reference manuals describe reference information for robotics products.

- *Technical reference manual - Lubrication in gearboxes*: Description of types and volumes of lubrication for the manipulator gearboxes.
- *Technical reference manual - RAPID overview*: An overview of the RAPID programming language.
- *Technical reference manual - RAPID Instructions, Functions and Data types*: Description and syntax for all RAPID instructions, functions, and data types.
- *Technical reference manual - RAPID kernel*: A formal description of the RAPID programming language.
- *Technical reference manual - System parameters*: Description of system parameters and configuration workflows.

Continues on next page

© Copyright 2014 - 2017 ABB. All rights reserved.

Continued

Application manuals

Specific applications (for example software or hardware options) are described in **Application manuals**. An application manual can describe one or several applications.

An application manual generally contains information about:

- The purpose of the application (what it does and when it is useful).
- What is included (for example cables, I/O boards, RAPID instructions, system parameters, DVD with PC software).
- How to install included or required hardware.
- How to use the application.
- Examples of how to use the application.

Operating manuals

The operating manuals describe hands-on handling of the products. The manuals are aimed at those having first-hand operational contact with the product, that is production cell operators, programmers, and trouble shooters.

The group of manuals includes (among others):

- *Operating manual - Emergency safety information*
- *Operating manual - General safety information*
- *Operating manual - Getting started, IRC5 and RobotStudio*
- *Operating manual - IRC5 Integrator's guide*
- *Operating manual - IRC5 with FlexPendant*
- *Operating manual - RobotStudio*
- *Operating manual - Trouble shooting IRC5*

© Copyright 2014 - 2017 ABB. All rights reserved.

How to read the product manual

Reading the procedures

The procedures contain all information required for the installation or service activity and can be printed out separately when needed for a certain service procedure.

Safety information

The manual includes a separate safety chapter that must be read through before proceeding with any service or installation procedures. All procedures also include specific safety information when dangerous steps are to be performed.

Read more in the chapter *Safety on page 17*.

Illustrations

The product is illustrated with general figures that does not take painting or protection type in consideration.

Likewise, certain work methods or general information that is valid for several product models, can be illustrated with illustrations that show a different product model than the one that is described in the current manual.

© Copyright 2014 - 2017 ABB. All rights reserved.

This page is intentionally left blank

1 Safety

1.1 Introduction to safety information

Overview

The safety information in this manual is divided into the following categories:

- General safety aspects, important to attend to before performing any service work on the robot. These are applicable for all service work and are found in *General safety information on page 18*.
- Safety signals and symbols shown in the manual and on the robot, warning for different types of dangers, are found in *Safety signals and symbols on page 39*.
- Specific safety information, pointed out in the procedures. How to avoid and eliminate the danger is either described directly in the procedure, or in specific instructions in the section *Safety related instructions on page 47*.

© Copyright 2014 - 2017 ABB. All rights reserved.

1.2 General safety information

1.2.1 Introduction to general safety information

Definitions

This section details general safety information for personnel performing installation, repair and maintenance work.

Sections

The general safety information is divided into the following sections.

Section	Examples of content
Safety in the manipulator system on page 19	This section describes the following: • safety, service • limitation of liability • related information
Protective stop and emergency stop on page 21	This section describes protective stop and emergency stop.
Safety risks on page 22	This section lists dangers relevant when working with the product. The dangers are split into different categories. • safety risks during installation or service • risks associated with live electrical parts
Safety actions on page 31	This section describes actions which may be taken to remedy or avoid dangers. • fire extinguishing • safe use of the teach pendant or jogging device

© Copyright 2014 - 2017 ABB. All rights reserved.

1.2.2 Safety in the manipulator system

Validity and responsibility

The information does not cover how to design, install and operate a complete system, nor does it cover all peripheral equipment that can influence the safety of the entire system. To protect personnel, the complete system must be designed and installed in accordance with the safety requirements set forth in the standards and regulations of the country where the robot is installed.

The users of ABB industrial robots are responsible for ensuring that the applicable safety laws and regulations in the country concerned are observed and that the safety devices necessary to protect people working with the robot system are designed and installed correctly. Personnel working with robot must be familiar with the operation and handling of the industrial robot as described in the applicable documents, for example:

- *Operating manual - IRC5 with FlexPendant*
- *Operating manual - General safety information* [I]
- *Product manual*

[I] This manual contains all safety instructions from the product manuals for the robots and the controllers.

The robot system shall be designed and constructed in such a way as to allow safe access to all areas where intervention is necessary during operation, adjustment, and maintenance.

Where it is necessary to perform tasks within the safeguarded space there shall be safe and adequate access to the task locations.

Users shall not be exposed to hazards, including slipping, tripping, and falling hazards.

Connection of external safety devices

Apart from the built-in safety functions, the robot is also supplied with an interface for the connection of external safety devices. An external safety function can interact with other machines and peripheral equipment via this interface. This means that control signals can act on safety signals received from the peripheral equipment as well as from the robot.

Limitation of liability

Any information given in this manual regarding safety must not be construed as a warranty by ABB that the industrial robot will not cause injury or damage even if all safety instructions are complied with.

Related information

Type of information	Detailed in document	Section
Installation of safety devices	*Product manual for the robot*	Installation and commissioning
Changing operating modes	*Operating manual - IRC5 with FlexPendant* *Operator's Manual - IRC5P*	Operating modes

Continues on next page

© Copyright 2014 - 2017 ABB. All rights reserved.

1.2.2 Safety in the manipulator system
Continued

Type of information	Detailed in document	Section
Restricting the working space	*Product manual for the robot*	Installation and commissioning

© Copyright 2014 - 2017 ABB. All rights reserved.

1.2.3 Protective stop and emergency stop

Overview

The protective stops and emergency stops are described in the product manual for the controller.

© Copyright 2014 - 2017 ABB. All rights reserved.

1.2.4 Safety risks

1.2.4.1 Safety risks during installation and service work on robots

Overview

This section includes information on general safety risks to be considered when performing installation and service work on the robot.

These safety instructions have to be read and followed by any person who deals with the installation and maintenance of the robot. Only persons who know the robot and are trained in the operation and handling of the robot are allowed to maintain the robot. Persons who are under the influence of alcohol, drugs or any other intoxicating substances are not allowed to maintain, repair, or use the robot.

General risks during installation and service

- The instructions in the product manual in the chapters *Installation and commissioning*, and *Repair* must always be followed.
- Emergency stop buttons must be positioned in easily accessible places so that the robot can be stopped quickly.
- Those in charge of operations must make sure that safety instructions are available for the installation in question.
- Those who install or service/maintain the robot must have the appropriate training for the equipment in question and in any safety matters associated with it.

Spare parts and special equipment

ABB does not supply spare parts and special equipment which have not been tested and approved by ABB. The installation and/or use of such products could negatively affect the structural properties of the robot and as a result of that affect the active or passive safety operation. ABB is not liable for damages caused by the use of non-original spare parts and special equipment. ABB is not liable for damages or injuries caused by unauthorized modifications to the robot system.

Personal protective equipment

Always use suitable personal protective equipment, based on the risk assessment for the robot installation.

Nation/region specific regulations

To prevent injuries and damages during the installation of the robot, the regulations applicable in the country concerned and the instructions of ABB Robotics must be complied with.

Non-voltage related risks

- Make sure that no one else can turn on the power to the controller and robot while you are working with the system. A good method is to always lock the main switch on the controller cabinet with a safety lock.

Continues on next page

© Copyright 2014 - 2017 ABB. All rights reserved.

- Safety zones, which must be crossed before admittance, must be set up in front of the robot's working space. Light beams or sensitive mats are suitable devices.
- Turntables or the like should be used to keep the operator out of the robot's working space.
- If the robot is installed at a height, hanging, or other than standing directly on the floor, there may be additional risks than those for a robot standing directly on the floor.
- The axes are affected by the force of gravity when the brakes are released. In addition to the risk of being hit by moving robot parts, there is a risk of being crushed by the parallel arm (if there is one).
- Energy stored in the robot for the purpose of counterbalancing certain axes may be released if the robot, or parts thereof, are dismantled.
- When dismantling/assembling mechanical units, watch out for falling objects.
- Be aware of stored heat energy in the controller.
- Never use the robot as a ladder, which means, do not climb on the robot motors or other parts during service work. There is a serious risk of slipping because of the high temperature of the motors and oil spills that can occur on the robot.
- Never use the robot as a ladder, which means, do not climb on the manipulator motors or other parts during service work. There is a risk of the robot being damaged.

To be observed by the supplier of the complete system

When integrating the robot with external devices and machines:

- The supplier of the complete system must ensure that all circuits used in the safety function are interlocked in accordance with the applicable standards for that function.
- The supplier of the complete system must ensure that all circuits used in the emergency stop function are interlocked in a safe manner, in accordance with the applicable standards for the emergency stop function.

Complete robot

Safety risk	Description
Hot components!	**CAUTION** Motors and gearboxes are HOT after running the robot! Touching motors and gearboxes may result in burns! With a higher environment temperature, more surfaces on the manipulator will get HOT and may also result in burns.

Continues on next page

© Copyright 2014 - 2017 ABB. All rights reserved.

1.2.4.1 Safety risks during installation and service work on robots
Continued

Safety risk	Description
Removed parts may result in collapse of the robot!	**WARNING** Take any necessary measures to ensure that the robot does not collapse as parts are removed. For example, secure the lower arm according to the repair instruction if removing the axis-2 motor.
Removed cables to the measurement system	**WARNING** If the internal cables for the measurement system have been disconnected during repair or maintenance, then the revolution counters must be updated.

Cabling

Safety risk	Description
Cable packages are sensitive to mechanical damage!	**CAUTION** The cable packages are sensitive to mechanical damage. Handle the cable packages and the connectors with care in order to avoid damage.

Gearboxes and motors

Safety risk	Description
Gears may be damaged if excessive force is used!	**CAUTION** Whenever parting/mating motor and gearbox, the gears may be damaged if excessive force is used!

© Copyright 2014 - 2017 ABB. All rights reserved.

1.2.4.2 CAUTION - Hot parts may cause burns!

Description

During normal operation, many robot parts become hot, especially the drive motors and gearboxes. Sometimes areas around these parts also become hot. Touching these may cause burns of various severity.

Because of a higher environment temperature, more surfaces on the robot get hot and may result in burns.

Elimination

The following instructions describe how to avoid the dangers specified above:

	Action	Information
1	Always use your hand, at some distance, to feel if heat is radiating from the potentially hot component before actually touching it.	
2	Wait until the potentially hot component has cooled if it is to be removed or handled in any other way.	

© Copyright 2014 - 2017 ABB. All rights reserved.

1.2.4.3 Safety risks related to tools/work pieces

Safe handling

It must be possible to safely turn off tools, such as milling cutters, etc. Make sure that guards remain closed until the cutters stop rotating.

It should be possible to release parts by manual operation (valves).

Safe design

Grippers/end effectors must be designed so that they retain work pieces in the event of a power failure or a disturbance to the controller.

Unauthorized modifications of the originally delivered robot are prohibited. Without the consent of ABB it is forbidden to attach additional parts through welding, riveting, or drilling of new holes into the castings. The strength could be affected.

CAUTION

Ensure that a gripper is prevented from dropping a work piece, if such is used.

© Copyright 2014 - 2017 ABB. All rights reserved.

1.2.4.4 Safety risks related to pneumatic/hydraulic systems

General

Special safety regulations apply to pneumatic and hydraulic systems.

> **Note**
>
> All components that remain pressurized after separating the machine from the power supply must be provided with clearly visible drain facilities and a warning sign that indicates the need for pressure relief before adjustments or performing any maintenance on the robot system.

Residual energy

- Residual energy can be present in these systems. After shutdown, particular care must be taken.
- The pressure must be released in the complete pneumatic or hydraulic systems before starting to repair them.
- Work on hydraulic equipment may only be performed by persons with special knowledge and experience of hydraulics.
- All pipes, hoses, and connections have to be inspected regularly for leaks and damage. Damage must be repaired immediately.
- Splashed oil may cause injury or fire.

Safe design

- Gravity may cause any parts or objects held by these systems to drop.
- Dump valves should be used in case of emergency.
- Shot bolts should be used to prevent tools, etc., from falling due to gravity.

© Copyright 2014 - 2017 ABB. All rights reserved.

1.2.4.5 Safety risks during operational disturbances

General

- The industrial robot is a flexible tool that can be used in many different industrial applications.
- All work must be carried out professionally and in accordance with the applicable safety regulations.
- Care must be taken at all times.

Qualified personnel

Corrective maintenance must only be carried out by qualified personnel who are familiar with the entire installation as well as the special risks associated with its different parts.

Extraordinary risks

If the working process is interrupted, extra care must be taken due to risks other than those associated with regular operation. Such an interruption may have to be rectified manually.

© Copyright 2014 - 2017 ABB. All rights reserved.

1.2.4.6 Risks associated with live electric parts

Voltage related risks, general

Work on the electrical equipment of the robot must be performed by a qualified electrician in accordance with electrical regulations.

- Although troubleshooting may, on occasion, need to be carried out while the power supply is turned on, the robot must be turned off (by setting the main switch to OFF) when repairing faults, disconnecting electric leads and disconnecting or connecting units.
- The main supply to the robot must be connected in such a way that it can be turned off from outside the working space of the robot.
- Make sure that no one else can turn on the power to the controller and robot while you are working with the system. A good method is to always lock the main switch on the controller cabinet with a safety lock.

The necessary protection for the electrical equipment and robot system during construction, commissioning, and maintenance is guaranteed if the valid regulations are followed.

All work must be performed:

- by qualified personnel
- on machine/robot system in deadlock
- in an isolated state, disconnected from power supply, and protected against reconnection.

Voltage related risks, IRC5 controller

A danger of high voltage is associated with, for example, the following parts:

- Be aware of stored electrical energy (DC link, Ultracapacitor bank unit) in the controller.
- Units such as I/O modules, can be supplied with power from an external source.
- The main supply/main switch
- The transformers
- The power unit
- The control power supply (230 VAC)
- The rectifier unit (262/400-480 VAC and 400/700 VDC. Note: capacitors!)
- The drive unit (400/700 VDC)
- The drive system power supply (230 VAC)
- The service outlets (115/230 VAC)
- The customer power supply (230 VAC)
- The power supply unit for additional tools, or special power supply units for the machining process.
- The external voltage connected to the controller remains live even when the robot is disconnected from the mains.
- Additional connections.

Continues on next page

© Copyright 2014 - 2017 ABB. All rights reserved.

1.2.4.6 Risks associated with live electric parts
Continued

Voltage related risks, robot

A danger of high voltage is associated with the robot in:

- The power supply for the motors (up to 800 VDC).
- The user connections for tools or other parts of the installation (max. 230 VAC).

Voltage related risks, tools, material handling devices, etc.

Tools, material handling devices, etc., may be live even if the robot system is in the OFF position. Power supply cables which are in motion during the working process may be damaged.

© Copyright 2014 - 2017 ABB. All rights reserved.

1.2.5 Safety actions

1.2.5.1 Safety fence dimensions

General

Install a safety cell around the robot to ensure safe robot installation and operation.

Dimensioning

The fence or enclosure must be dimensioned to withstand the force created if the load being handled by the robot is dropped or released at maximum speed. Determine the maximum speed from the maximum velocities of the robot axes and from the position at which the robot is working in the work cell (see the section *Robot motion* in the *Product specification*).

Also consider the maximum possible impact caused by a breaking or malfunctioning rotating tool or other device fitted to the robot.

© Copyright 2014 - 2017 ABB. All rights reserved.

1.2.5.2 Fire extinguishing

Note

Use a CARBON DIOXIDE (CO_2) extinguisher in the event of a fire in the robot or controller!

© Copyright 2014 - 2017 ABB. All rights reserved.

1.2.5.3 Emergency release of the robot arm

Description

In an emergency situation, the brakes on a robot axis can be released manually by pushing a brake release button.

How to release the brakes is detailed in the section:

- *Manually releasing the brakes on page 78*.

The robot arm may be moved manually on smaller robot models, but larger models may require using an overhead crane or similar equipment.

Increased injury

Before releasing the brakes, make sure that the weight of the arms does not increase the pressure on the trapped person, further increasing any injury!

DANGER

When releasing the holding brakes, the robot axes may move very quickly and sometimes in unexpected ways.

Make sure no personnel is near or beneath the robot arm.

© Copyright 2014 - 2017 ABB. All rights reserved.

1.2.5.4 Brake testing

When to test

During operation, the holding brake of each axis normally wears down. A test can be performed to determine whether the brake can still perform its function.

How to test

The function of the holding brake of each axis motor may be verified as described below:

1. Run each robot axis to a position where the combined weight of the robot arm and any load is maximized (maximum static load).
2. Switch the motor to the MOTORS OFF.
3. Inspect and verify that the axis maintains its position.

   If the robot does not change position as the motors are switched off, then the brake function is adequate.

© Copyright 2014 - 2017 ABB. All rights reserved.

1.2.5.5 Risk of disabling function "Reduced speed 250 mm/s"

Note

Do not change *Transm gear ratio* or other kinematic system parameters from the FlexPendant or a PC. This will affect the safety function "Reduced speed 250 mm/s".

© Copyright 2014 - 2017 ABB. All rights reserved.

1.2.5.6 Safe use of the jogging device

Three-position enabling device

The three-position enabling device is a manually operated, constant pressure push-button which, when continuously activated in one position only, allows potentially hazardous functions but does not initiate them. In any other position, hazardous functions are stopped safely.

The three-position enabling device is of a specific type where you must press the push-button only half-way to activate it. In the fully in and fully out positions, operating the robot is impossible.

Note

The three-position enabling device is a push-button located on the jogging device which, when pressed halfway in, switches the system to MOTORS ON. When the enabling device is released or pushed all the way in, the manipulator switches to the MOTORS OFF state.

To ensure safe use of the jogging device, the following must be implemented:

- The enabling device must never be rendered inoperational in any way.
- During programming and testing, the enabling device must be released as soon as there is no need for the robot to move.
- Anyone entering the working space of the robot must always bring the jogging device with him/her. This is to prevent anyone else from taking control of the robot without his/her knowledge.

Hold-to-run function

The hold-to-run function allows movement when a button connected to the function is actuated manually and immediately stops any movement when released. The hold-to-run function can only be used in manual mode.

How to operate the hold-to-run function for IRC5 is described in *Operating manual - IRC5 with FlexPendant*.

© Copyright 2014 - 2017 ABB. All rights reserved.

1.2.5.7 Work inside the working range of the robot

WARNING

If work must be carried out within the work area of the robot, then the following points must be observed:

- The operating mode selector on the controller must be in the manual mode position to render the three-position enabling device operational and to block operation from a computer link or remote control panel.
- The maximum speed of the robot is limited to 250 mm/s when the operating mode selector is in the position *Manual mode with reduced speed*. This should be the normal position when entering the working space.

  The position *Manual mode with full speed (100%)* may only be used by trained personnel who are aware of the risks that this entails. *Manual mode with full speed (100%)* is not available in USA or Canada.
- Pay attention to the rotating axes of the robot. Keep away from axes to not get entangled with hair or clothing. Also, be aware of any danger that may be caused by rotating tools or other devices mounted on the robot or inside the cell.
- Test the motor brake on each axis, according to the section *Brake testing on page 34*.
- To prevent anyone else from taking control of the robot, always put a safety lock on the cell door and bring the three-position enabling device with you when entering the working space.

WARNING

NEVER, under any circumstances, stay beneath any of the robot's axes! There is always a risk that the robot will move unexpectedly when robot axes are moved using the three-position enabling device or during other work inside the working range of the robot.

© Copyright 2014 - 2017 ABB. All rights reserved.

1.2.5.8 Signal lamp (optional)

Description

A signal lamp with a yellow fixed light can be mounted on the robot, as a safety device.

Function

The lamp is active in MOTORS ON mode.

Further information

Further information about the MOTORS ON/MOTORS OFF mode may be found in the product manual for the controller.

© Copyright 2014 - 2017 ABB. All rights reserved.

1.3 Safety signals and symbols

1.3.1 Safety signals in the manual

Introduction to safety signals

This section specifies all dangers that can arise when doing the work described in the user manuals. Each danger consists of:

- A caption specifying the danger level (DANGER, WARNING, or CAUTION) and the type of danger.
- A brief description of what will happen if the operator/service personnel **do not** eliminate the danger.
- Instruction about how to eliminate danger to simplify doing the work.

Danger levels

The table below defines the captions specifying the danger levels used throughout this manual.

Symbol	Designation	Significance
 xx0200000022	DANGER	Warns that an accident *will* occur if the instructions are not followed, resulting in a serious or fatal injury and/or severe damage to the product. It applies to warnings that apply to danger with, for example, contact with high voltage electrical units, explosion or fire risk, risk of poisonous gases, risk of crushing, impact, fall from height, and so on.
 xx0100000002	WARNING	Warns that an accident *may* occur if the instructions are not followed that can lead to serious injury, possibly fatal, and/or great damage to the product. It applies to warnings that apply to danger with, for example, contact with high voltage electrical units, explosion or fire risk, risk of poisonous gases, risk of crushing, impact, fall from height, etc.
 xx0200000024	ELECTRICAL SHOCK	Warns for electrical hazards which could result in severe personal injury or death.
 xx0100000003	CAUTION	Warns that an accident may occur if the instructions are not followed that can result in injury and/or damage to the product. It also applies to warnings of risks that include burns, eye injury, skin injury, hearing damage, crushing or slipping, tripping, impact, fall from height, etc. Furthermore, it applies to warnings that include function requirements when fitting and removing equipment where there is a risk of damaging the product or causing a breakdown.
 xx0200000023	ELECTROSTATIC DISCHARGE (ESD)	Warns for electrostatic hazards which could result in severe damage to the product.

Continues on next page

© Copyright 2014 - 2017 ABB. All rights reserved.

1.3.1 Safety signals in the manual

Continued

Symbol	Designation	Significance
 xx0100000004	NOTE	Describes important facts and conditions.
 xx0100000098	TIP	Describes where to find additional information or how to do an operation in an easier way.

© Copyright 2014 - 2017 ABB. All rights reserved.

1.3.2 Safety symbols on product labels

Introduction to labels

This section describes safety symbols used on labels (stickers) on the product.

Symbols are used in combinations on the labels, describing each specific warning. The descriptions in this section are generic, the labels can contain additional information such as values.

Note

The safety and health symbols on the labels on the product must be observed. Additional safety information given by the system builder or integrator must also be observed.

Types of labels

Both the robot and the controller are marked with several safety and information labels, containing important information about the product. The information is useful for all personnel handling the robot system, for example during installation, service, or operation.

The safety labels are language independent, they only use graphics. See *Symbols on safety labels on page 41*.

The information labels can contain information in text (English, German, and French).

Symbols on safety labels

Symbol	Description
 xx0900000812	**Warning!** Warns that an accident *may* occur if the instructions are not followed that can lead to serious injury, possibly fatal, and/or great damage to the product. It applies to warnings that apply to danger with, for example, contact with high voltage electrical units, explosion or fire risk, risk of poisonous gases, risk of crushing, impact, fall from height, etc.
 xx0900000811	**Caution!** Warns that an accident may occur if the instructions are not followed that can result in injury and/or damage to the product. It also applies to warnings of risks that include burns, eye injury, skin injury, hearing damage, crushing or slipping, tripping, impact, fall from height, etc. Furthermore, it applies to warnings that include function requirements when fitting and removing equipment where there is a risk of damaging the product or causing a breakdown.
 xx0900000839	**Prohibition** Used in combinations with other symbols.

Continues on next page

© Copyright 2014 - 2017 ABB. All rights reserved.

1.3.2 Safety symbols on product labels
Continued

Symbol	Description
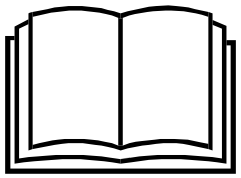 xx0900000813	**See user documentation** Read user documentation for details. Which manual to read is defined by the symbol: • No text: *Product manual*. • EPS: *Application manual - Electronic Position Switches*.
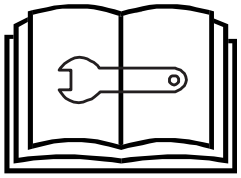 xx0900000816	**Before disassemble, see product manual**
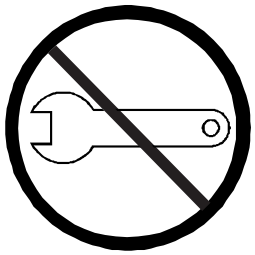 xx0900000815	**Do not disassemble** Disassembling this part can cause injury.
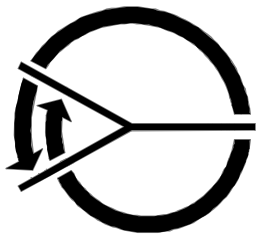 xx0900000814	**Extended rotation** This axis has extended rotation (working area) compared to standard.
 xx0900000808	**Brake release** Pressing this button will release the brakes. This means that the robot arm can fall down.

Continues on next page

© Copyright 2014 - 2017 ABB. All rights reserved.

Symbol	Description
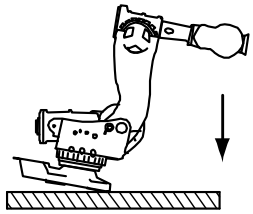 xx0900000810 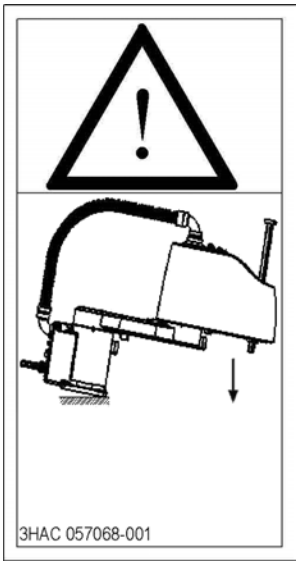 xx1500002402	**Tip risk when loosening bolts** The robot can tip over if the bolts are not securely fastened.
  xx0900000817	**Crush** Risk of crush injuries.
 xx0900000818	**Heat** Risk of heat that can cause burns.

Continues on next page

© Copyright 2014 - 2017 ABB. All rights reserved.

1.3.2 Safety symbols on product labels
Continued

Symbol	Description
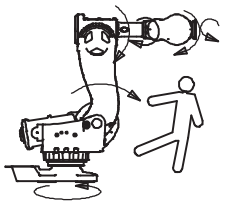 xx0900000819 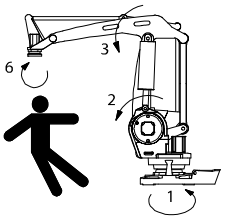 xx1000001141 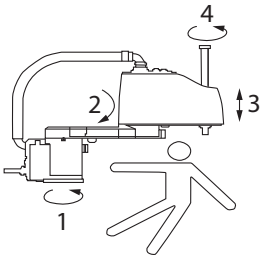 xx1500002616	**Moving robot** The robot can move unexpectedly.
 xx0900000820 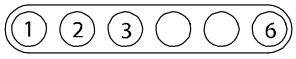 xx1000001140	**Brake release buttons**
 xx0900000821	**Lifting bolt**

Continues on next page

© Copyright 2014 - 2017 ABB. All rights reserved.

Symbol	Description
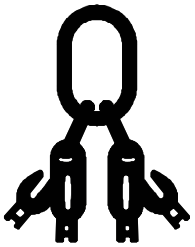 xx1000001242	**Chain sling with shortener**
 xx0900000822	**Lifting of robot**
 xx0900000823	**Oil** Can be used in combination with prohibition if oil is not allowed.
 xx0900000824	**Mechanical stop**
 xx1000001144	**No mechanical stop**
 xx0900000825	**Stored energy** Warns that this part contains stored energy. Used in combination with *Do not disassemble* symbol.

Continues on next page

© Copyright 2014 - 2017 ABB. All rights reserved.

1.3.2 Safety symbols on product labels

Continued

Symbol	Description
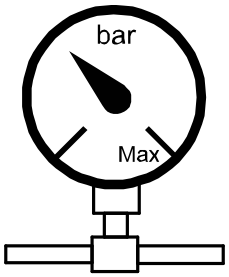 xx0900000826	**Pressure** Warns that this part is pressurized. Usually contains additional text with the pressure level.
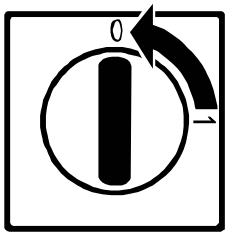 xx0900000827	**Shut off with handle** Use the power switch on the controller.
 xx1400002648	**Do not step** Warns that stepping on these parts can cause damage to the parts.

© Copyright 2014 - 2017 ABB. All rights reserved.

1.4 Safety related instructions

1.4.1 DANGER - Moving robots are potentially lethal!

Description

Any moving robot is a potentially lethal machine.

When running, the robot may perform unexpected and sometimes irrational movements. Moreover, all movements are performed with great force and may seriously injure any personnel and/or damage any piece of equipment located within the working range of the robot.

Elimination

	Action	Note
1	Before attempting to run the robot, make sure all emergency stop equipment is correctly installed and connected.	Emergency stop equipment such as gates, tread mats, light curtains, etc.
2	Usually the hold-to-run function is active only in manual full speed mode. To increase safety it is also possible to activate hold-to-run for manual reduced speed with a system parameter. The hold-to-run function is used in manual mode, not in automatic mode.	How to use the hold-to-run function is described in section *How to use the hold-to-run function* in the *Operating manual - IRC5 with FlexPendant*.
3	Make sure no personnel are present within the working range of the robot before pressing the start button.	

© Copyright 2014 - 2017 ABB. All rights reserved.

1.4.2 DANGER - First test run may cause injury or damage!

Description

Since performing a service activity often requires disassembly of the robot, there are several safety risks to take into consideration before the first test run.

Elimination

Follow the procedure below when performing the first test run after a service activity, such as repair, installation, or maintenance.



DANGER

Running the robot without fulfilling the following aspects, may cause severe damage to the robot.

	Action
1	Remove all service tools and foreign objects from the robot and its working area.
2	Verify that the robot is secured to its position, see installation section in the product manual for the robot.
3	Verify that any safety equipment installed to secure the robot arm position or restrict the robot arm motion during service activity is removed.
4	Verify that the fixture and work piece are well secured, if applicable.
5	Install all safety equipment properly.
6	Make sure all personnel are standing at a safe distance from the robot, that is out of its reach behind safety fences, and so on.
7	Pay special attention to the function of the part that previously was serviced.

Collision risks



CAUTION

When programming the movements of the robot, always identify potential collision risks before the first test run.

© Copyright 2014 - 2017 ABB. All rights reserved.

1.4.3 DANGER - Make sure that the main power has been switched off!

Description

Working with high voltage is potentially lethal. Persons subjected to high voltage may suffer cardiac arrest, burn injuries, or other severe injuries. To avoid these dangers, do not proceed working before eliminating the danger as detailed below.

Elimination, IRC5 Compact Controller

	Action	Note/illustration
1	Switch off the main power switch on the controller cabinet.	Note that the position of the main switch can vary depending on the year model. 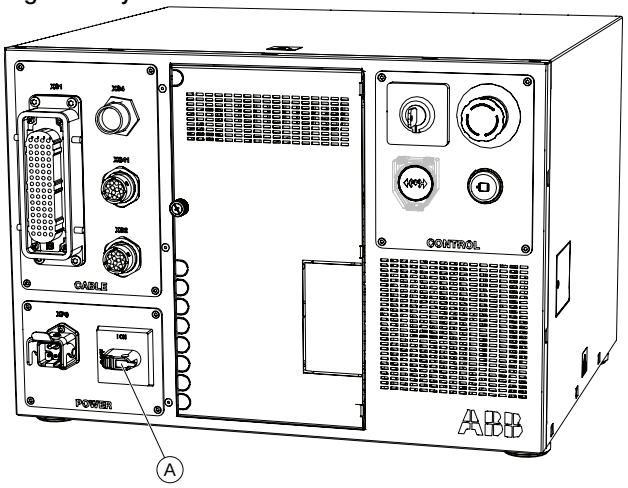 xx0900000313 A: Main power switch
2	Disconnect the input power cable from the wall socket.	

© Copyright 2014 - 2017 ABB. All rights reserved.

1.4.4 WARNING - The unit is sensitive to ESD!

Description

ESD (electrostatic discharge) is the transfer of electrical static charge between two bodies at different potentials, either through direct contact or through an induced electrical field. When handling parts or their containers, personnel not grounded may potentially transfer high static charges. This discharge may destroy sensitive electronics.

Elimination

	Action	Note
1	Use a wrist strap.	Wrist straps must be tested frequently to ensure that they are not damaged and are operating correctly.
2	Use an ESD protective floor mat.	The mat must be grounded through a current-limiting resistor.
3	Use a dissipative table mat.	The mat should provide a controlled discharge of static voltages and must be grounded.

Continues on next page

© Copyright 2014 - 2017 ABB. All rights reserved.

Location of wrist strap button

The location of the wrist strap button is shown in the following illustration.

IRC5 Compact Controller

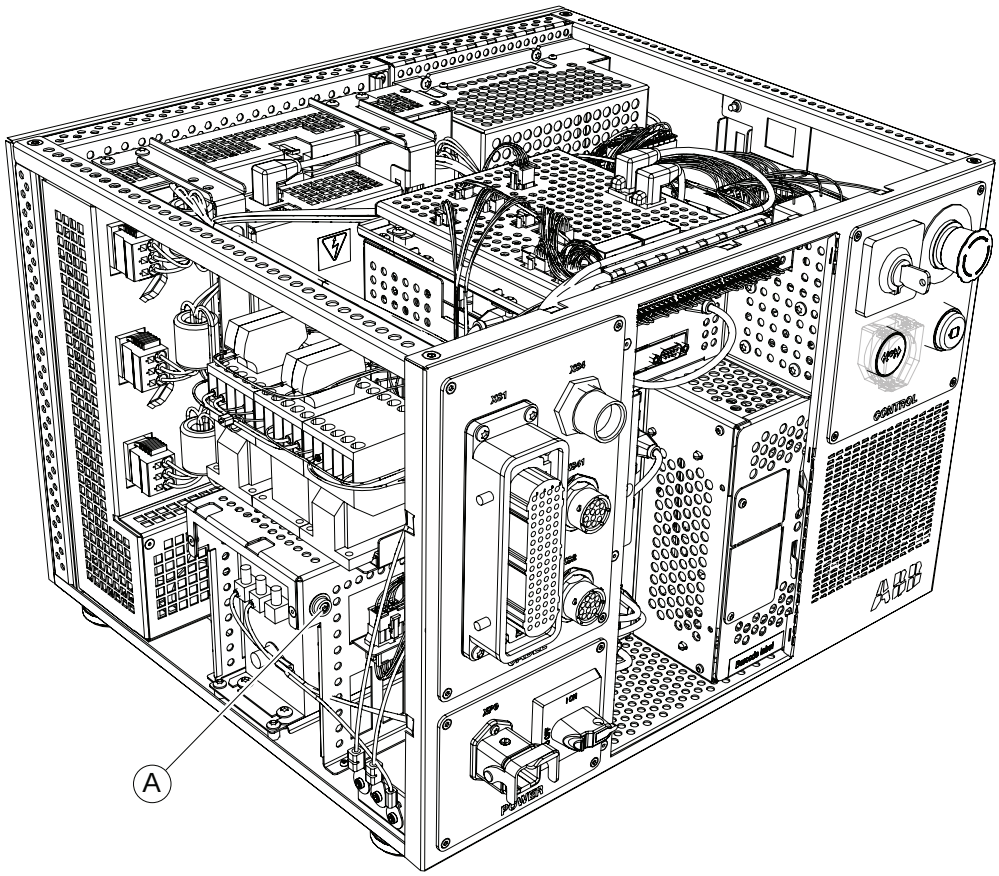

xx1400001622

A	Wrist strap button

© Copyright 2014 - 2017 ABB. All rights reserved.

1.4.5 WARNING - Safety risks during handling of batteries

Description

Under normal conditions of use, the electrode materials and liquid electrolyte in the batteries are not exposed to the outside, provided the battery integrity is maintained and seals remain intact.

There is a risk of exposure only in case of abuse (mechanical, thermal, electrical) which leads to the activation of safety valves and/or the rupture of the battery container. Electrolyte leakage, electrode materials reaction with moisture/water or battery vent/explosion/fire may follow, depending upon the circumstances.

Note

Appropriate disposal regulations must be observed.

Elimination

	Action	Note
1	Do not short circuit, recharge, puncture, incinerate, crush, immerse, force discharge or expose to temperatures above the declared operating temperature range of the product. Risk of fire or explosion.	Operating temperatures are listed in *Pre-installation procedure on page 62*.
2	Use safety glasses when handling the batteries.	
3	In the event of leakage, wear gloves and chemical apron.	
4	In the event of fire, use self-contained breathing apparatus.	

© Copyright 2014 - 2017 ABB. All rights reserved.

1.4.6 WARNING - Safety risks during work with gearbox lubricants (oil or grease)

Description

When handling gearbox lubricants, there is a risk of both personal injury and product damage occurring. The following safety information must be regarded before performing any work with lubricants in the gearboxes.

Note

When handling oil, grease, or other chemical substances the safety information of the manufacturer must be observed.

Note

When aggressive media is handled, an appropriate skin protection must be provided. Gloves and goggles are recommended.

Note

Appropriate disposal regulations must be observed.

Note

Take special care when handling hot lubricants.

Warnings and elimination

Warning	Description	Elimination/Action
 xx0100000002 **Hot oil or grease**	Changing and draining gearbox oil or grease may require handling hot lubricant heated up to 90 °C.	Make sure that protective gear like goggles and gloves are always worn during this activity.
 xx0100000002 **Allergic reaction**	When working with gearbox lubricant there is a risk of an allergic reaction.	Make sure that protective gear like goggles and gloves are always worn.
 xx0100000002 **Possible pressure build-up in gearbox**	When opening the oil or grease plug, there may be pressure present in the gearbox, causing lubricant to spray from the opening.	Open the plug carefully and keep away from the opening. Do not overfill the gearbox when filling.

Continues on next page

© Copyright 2014 - 2017 ABB. All rights reserved.

1.4.6 WARNING - Safety risks during work with gearbox lubricants (oil or grease)
Continued

Warning	Description	Elimination/Action
 xx0100000002 **Do not overfill**	Overfilling of gearbox lubricant can lead to internal over-pressure inside the gearbox which in turn may: • damage seals and gaskets • completely press out seals and gaskets • prevent the robot from moving freely.	Make sure not to overfill the gearbox when filling it with oil or grease! After filling, verify that the level is correct.
 xx0100000004 **Specified amount depends on drained volume**	The specified amount of oil or grease is based on the total volume of the gearbox. When changing the lubricant, the amount refilled may differ from the specified amount, depending on how much has previously been drained from the gearbox.	After filling, verify that the level is correct.
 xx0100000003 **Contaminated oil in gear boxes**	When draining the oil make sure that as much oil as possible is drained from the gearbox. The reason for this is to drain as much oil sludge and metal chips as possible from the gearbox. The magnetic oil plugs will take care of any remaining metal chips.	

© Copyright 2014 - 2017 ABB. All rights reserved.

2 Installation and commissioning

2.1 Introduction

General

This chapter contains assembly instructions and information for installing the IRB 1200 at the working site.

More detailed technical data can be found in the *Product specification* for the IRB 1200, such as:

- Load diagram
- Permitted extra loads (equipment), if any
- Location of extra loads (equipment), if any.

Safety information

Before any installation work is commenced, it is extremely important that all safety information is observed!

There are general safety aspects that must be read through, as well as more specific safety information that describes the danger and safety risks when performing the procedures. Read the chapter *Safety on page 17* before performing any installation work.

Note

If the IRB 1200 is connected to power, always make sure that the robot is connected to *protective earth* before starting any installation work!

For more information see:

- *Product manual - IRC5*
- *Product manual - IRC5 Compact*

© Copyright 2014 - 2017 ABB. All rights reserved.

2.2 Unpacking

2.2.1 Extra O-rings for protection class IP67 and protection type Foundry Plus

Installation of extra O-rings

For robots with protection class IP67 (option 287-10)

For robots with protection type Foundry Plus (option 287-3)

Two extra O-rings are delivered together with the robot and must be fitted to the robot during installation.

Equipment	Art. no.	Note
O-ring	3HAB3772-19	For robots with protection class IP67 (option 287-10) Used with protection type Foundry Plus (option 287-3). Used to seal between the main power cable and the connector. Robots with manipulator cables routed from the rear of the base: 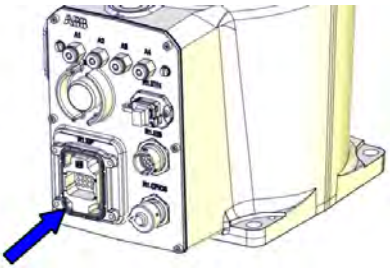 xx1500000243 Robots with manipulator cables routed from below (option 996-1): 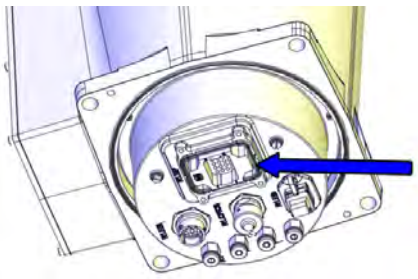 xx1500000242

Continues on next page

© Copyright 2014 - 2017 ABB. All rights reserved.

2.2.1 Extra O-rings for protection class IP67 and protection type Foundry Plus
Continued

Equipment	Art. no.	Note
O-ring	3HAB3772-141	Used with protection class IP67. Used with protection type Foundry Plus. Used with manipulator cables routed from below (option 996-1) 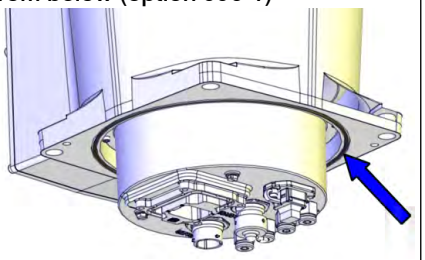 xx1500000241

Further information

For installation information, see *Orienting and securing the robot on page 81* and *Electrical connections on page 100*.

© Copyright 2014 - 2017 ABB. All rights reserved.

2.2.2 Protection covers

Protection covers for water and dust proofing

A dust cap and two protectors (used with option 803-2) are delivered together with the robot and must be well fitted to the connectors in any application requiring water and dust proofing.

Equipment	Art. no.	Note
Dust cap	3HEA800897-002	Used to cover unused connectors for water and dust proofing. Replace if damaged.
M12 protector	3HAC047543-001	Used with option 803-2. Used to cover unused connectors for water and dust proofing. Replace if damaged.
RJ 45 protector	3HAC047539-001	Used with option 803-2. Used to cover unused connectors for water and dust proofing. Replace if damaged.

Protection covers for Foundry Plus robots

For robots with protection type Foundry Plus (option 287-3)

Extra protection covers, sealing and plugs are delivered together with Foundry Plus robots and must be fitted to the robot during installation.

Equipment	Art. no.	Note
Protection bracket for CP/CS connectors	3HAC058350-001	Used with protection type Foundry Plus. Replace if damaged.
Protection cover for axis-6 turning disk	3HAC044666-001	Used with protection type Foundry Plus. Replace if damaged.
T40 variseal sealing	3HAC044641-012	Used with protection type Foundry Plus. Replace if damaged.
Protection plug for lifting holes	3HAC4836-24	Used with protection type Foundry Plus. Replace if damaged.

© Copyright 2014 - 2017 ABB. All rights reserved.

2.2.3 Transportation bracket

Location of the transportation bracket

A transportation bracket is installed and delivered together with the robot for securing the robot position during shipping and transport. The transportation bracket must be removed before fitting the lifting accessory to the robot during the lifting of the robot to the installation site.

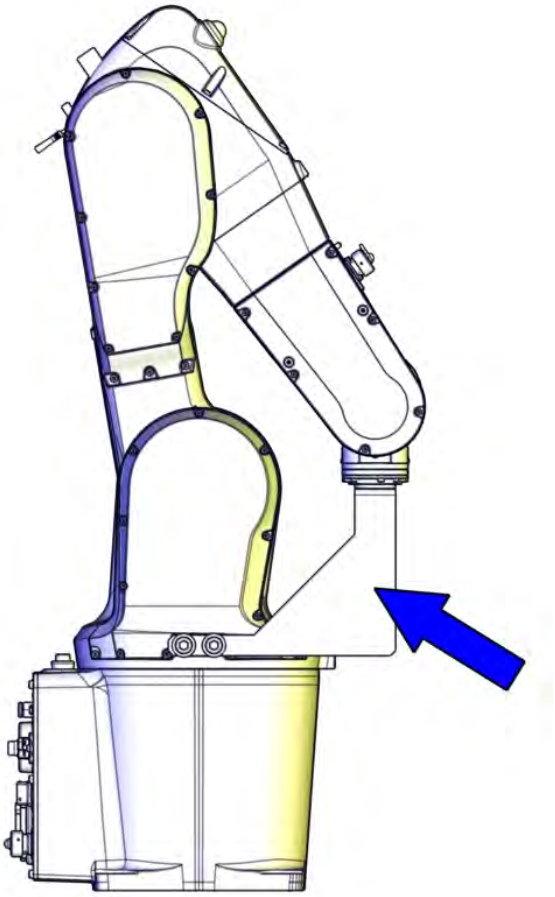

xx1500001605

Equipment	Art. no.	Note
Transportation bracket (IRB 1200-7/0.7)	3HAC051896-001	
Transportation bracket (IRB 1200-5/0.9)	3HAC051897-001	

Continues on next page

© Copyright 2014 - 2017 ABB. All rights reserved.

2.2.3 Transportation bracket
Continued

Removing the transportation bracket

Use this procedure to remove the bracket.

	Action	Note
1	Move the robot to an appropriate position. **WARNING** The robot is likely to be mechanically unstable if not secured to the foundation!	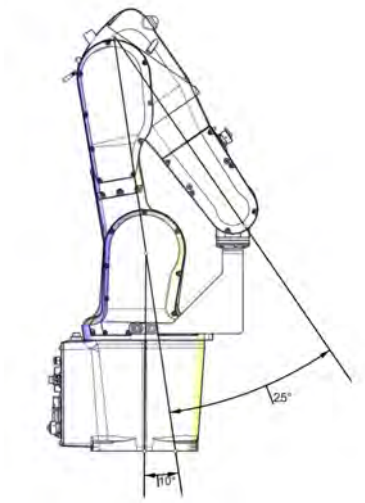 xx1500001399
2	**CAUTION** For Clean Room robots, it is important not to rub against the paint of the robot while performing any service work on the robot.	
3	Remove the screws and washers.	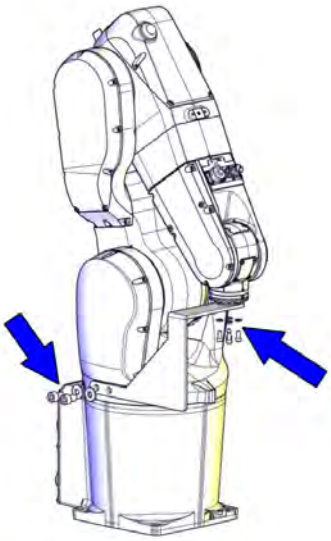 xx1500001604

Continues on next page

© Copyright 2014 - 2017 ABB. All rights reserved.

	Action	Note
4	Remove the bracket. **For robots with protection type Foundry Plus (option 287-3)** Remove the two M10 rubber washers, as circled in the figure, together with the bracket and reserve them for further use. 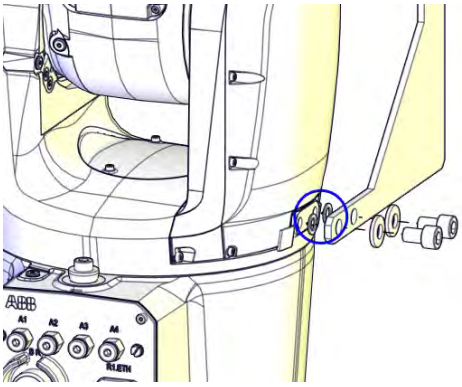 xx1600001178	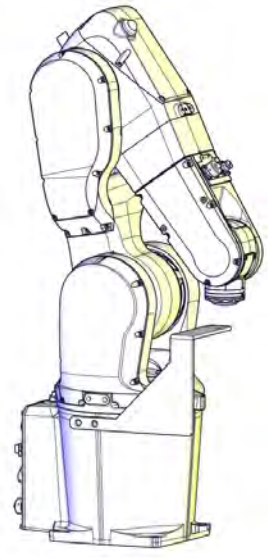 xx1500001400
5	**For robots with with protection type Clean Room** **For robots with food grade lubrication** Make sure the swing sealing plug is intact and the sealant around fully covers the joint. If not, replace the swing sealing plug and seal the joint. See *Swing sealing plug for Clean Room robots and robots with food grade lubrication on page 143*. After the replacement, wipe clean.	Swing sealing plug: 3HAC053687-001 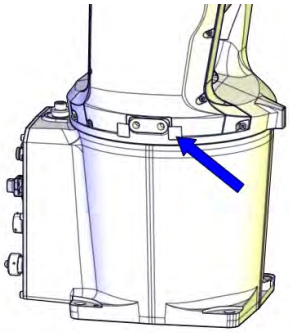 xx1600000205
6	**For robots with protection type Foundry Plus** Fit protection plugs to the lifting holes.	Protection plug for lifting holes: 3HAC4836-24 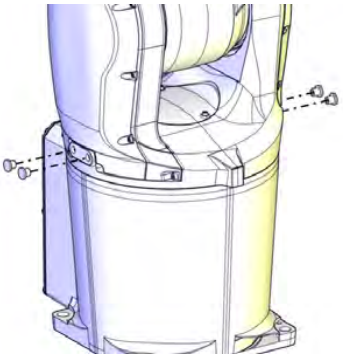 xx1600001147

© Copyright 2014 - 2017 ABB. All rights reserved.

2.2.4 Pre-installation procedure

Introduction

This section is intended for use when unpacking and installing the robot for the first time. It also contains information useful during later re-installation of the robot.

Prerequisites for installation personnel

Installation personnel working with an ABB product must:

- be trained by ABB and have the required knowledge of mechanical and electrical installation/maintenance/repair work
- conform to all national and local codes.

Checking the pre-requisites for installation

	Action
1	Make a visual inspection of the packaging and make sure that nothing is damaged.
2	Remove the packaging.
3	Check for any visible transport damage.  **Note** Stop unpacking and contact ABB if transport damages are found.
4	Clean the unit with a lint-free cloth, if necessary.
5	Make sure that the lifting accessory used is suitable to handle the weight of the robot as specified in: *Weight, robot on page 62*
6	If the robot is not installed directly, it must be stored as described in: *Storage conditions, robot on page 64*
7	Make sure that the expected operating environment of the robot conforms to the specifications as described in: *Operating conditions, robot on page 65*
8	Before taking the robot to its installation site, make sure that the site conforms to: • *Loads on foundation, robot on page 63* • *Protection classes, robot on page 65* • *Requirements, foundation on page 64*
9	Before moving the robot, please observe the stability of the robot: *Risk of tipping/stability on page 71*
10	When these prerequisites are met, the robot can be taken to its installation site as described in section: *On-site installation on page 73*
11	Install required equipment, if any. • *Installing the signal lamp on page 96*

Weight, robot

The table shows the weight of the robot.

Robot model	Weight
IRB 1200	IRB 1200-5/0.9: 54 kg IRB 1200-7/0.7: 52 kg

Continues on next page

© Copyright 2014 - 2017 ABB. All rights reserved.

Note

The weight does not include tools and other equipment fitted on the robot!

Loads on foundation, robot

The illustration shows the directions of the robots stress forces.

The directions are valid for all floor mounted, suspended and inverted robots.

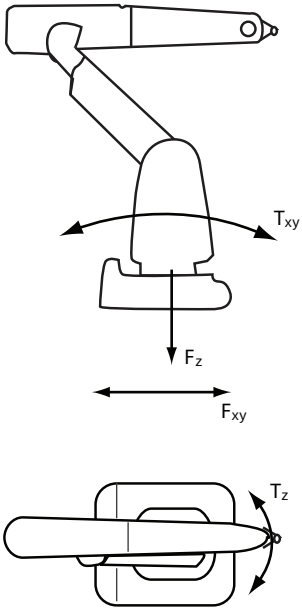

xx1100000521

F_{xy}	Force in any direction in the XY plane
F_z	Force in the Z plane
T_{xy}	Bending torque in any direction in the XY plane
T_z	Bending torque in the Z plane

The table shows the various forces and torques working on the robot during different kinds of operation.

Note

These forces and torques are extreme values that are rarely encountered during operation. The values also never reach their maximum at the same time!

Floor mounted

Force	Endurance load (in operation)	Max. load (emergency stop)
Force xy	±910 N	±1620 N
Force z	-550 ±980 N	-550 ±1610 N
Torque xy	±570 Nm	±1550 Nm
Torque z	±280 Nm	±580 Nm

Continues on next page

© Copyright 2014 - 2017 ABB. All rights reserved.

2.2.4 Pre-installation procedure
Continued

Wall mounted

Force	Endurance load (in operation)	Max. load (emergency stop)
Force xy	±1210 N	±1940 N
Force z	0 ±900 N	0 ±1340 N
Torque xy	±700 Nm	±1650 Nm
Torque z	±300 Nm	±610 Nm

Suspended

Force	Endurance load (in operation)	Max. load (emergency stop)
Force xy	±910 N	±1620 N
Force z	+550 ±980 N	+550 ±1610 N
Torque xy	±570 Nm	±1550 Nm
Torque z	±280 Nm	±580 Nm

Requirements, foundation

The table shows the requirements for the foundation where the weight of the installed robot is included:

Requirement	Value	Note
Flatness of foundation surface	0.1/500 mm	Flat foundations give better repeatability of the resolver calibration compared to original settings on delivery from ABB. The value for levelness aims at the circumstance of the anchoring points in the robot base. In order to compensate for an uneven surface, the robot can be recalibrated during installation. If resolver/encoder calibration is changed this will influence the absolute accuracy.
Maximum tilt	5º	The limit for the maximum payload on the robot is reduced if the robot is tilted from 0°. Contact ABB for further information about acceptable loads.
Minimum resonance frequency	22 Hz	

Storage conditions, robot

The table shows the allowed storage conditions for the robot:

Parameter	Value
Minimum ambient temperature	-25ºC
Maximum ambient temperature	+55ºC
Maximum ambient temperature (less than 24 hrs)	+70ºC
Maximum ambient humidity	95% at constant temperature (gaseous only)

Continues on next page

© Copyright 2014 - 2017 ABB. All rights reserved.

Operating conditions, robot

The table shows the allowed operating conditions for the robot:

Parameter	Value
Minimum ambient temperature	+5ºC [i]
Maximum ambient temperature	+45ºC
Maximum ambient temperature for robots with food grade lubrication	+35ºC [ii]
Maximum ambient humidity	95% at constant temperature

i At low environmental temperature < 10ºC is, as with any other machine, a warm-up phase recommended to be run with the robot. Otherwise there is a risk that the robot stops or run with lower performance due to temperature dependent oil and grease viscosity.

ii For robots with food grade lubrication, if environment temperature > 35ºC, contact ABB for further information.

Protection classes, robot

The table shows the available protection types of the robot, with the corresponding protection class.

Protection type	Protection class
Manipulator, protection type Standard	IP40 IP67 (option 287-10)
Manipulator, protection type Foundry Plus	Not available
Manipulator, protection type Clean Room	Not available

© Copyright 2014 - 2017 ABB. All rights reserved.

2.2.5 Dimensions

Dimensions IRB 1200-5/0.9

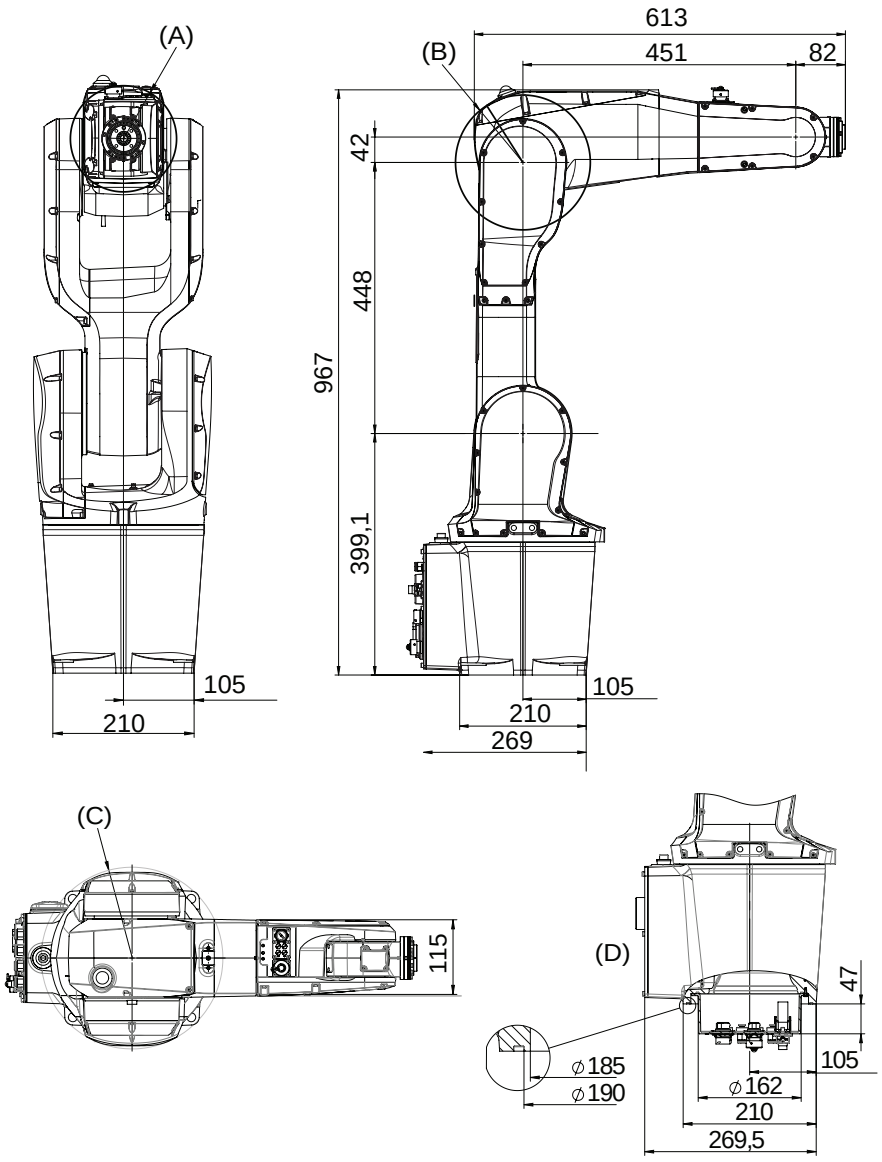

xx1400000339

Pos	Description
A	Minimum turning radius axis 4 R=79 mm
B	Minimum turning radius axis 3 R=111 mm
C	Minimum turning radius axis 1 R=138 mm
D	Valid for option Robot cabling routing, 966-1 From below

Continues on next page

© Copyright 2014 - 2017 ABB. All rights reserved.

Dimensions IRB 1200-7/0.7

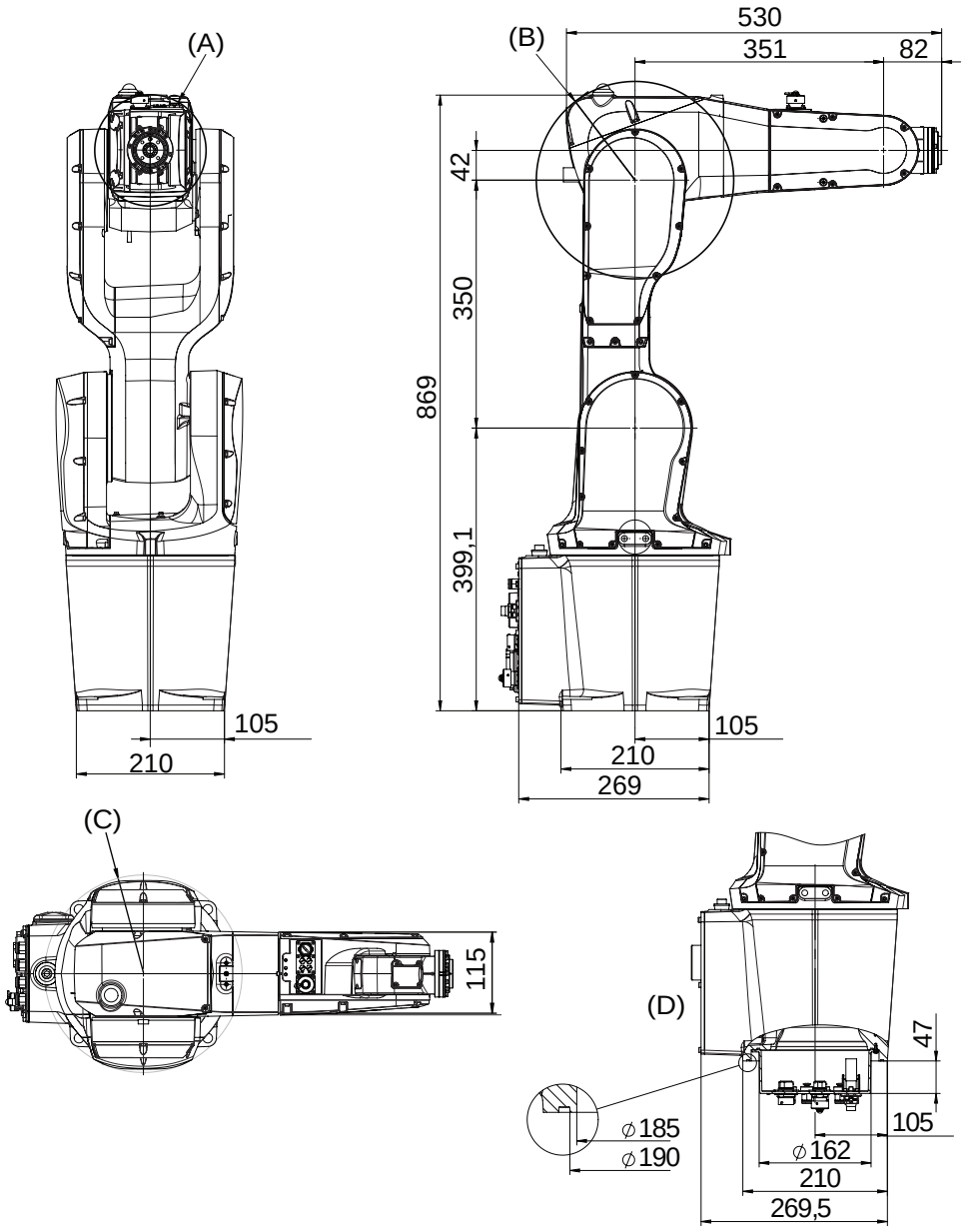

xx1300000366

Position	Description
A	Minimum turning radius axis 4 R=79 mm
B	Minimum turning radius axis 3 R=139 mm
C	Minimum turning radius axis 1 R=138 mm
D	Valid for option Robot cabling routing, 966-1 From below

© Copyright 2014 - 2017 ABB. All rights reserved.

2.2.6 Working range

Illustration, working range IRB 1200-5/0.9

IRB 1200-5/0.9 Working range, positions at wrist center and angle of axes 2 and 3

The illustration shows the unrestricted working range of the robot.

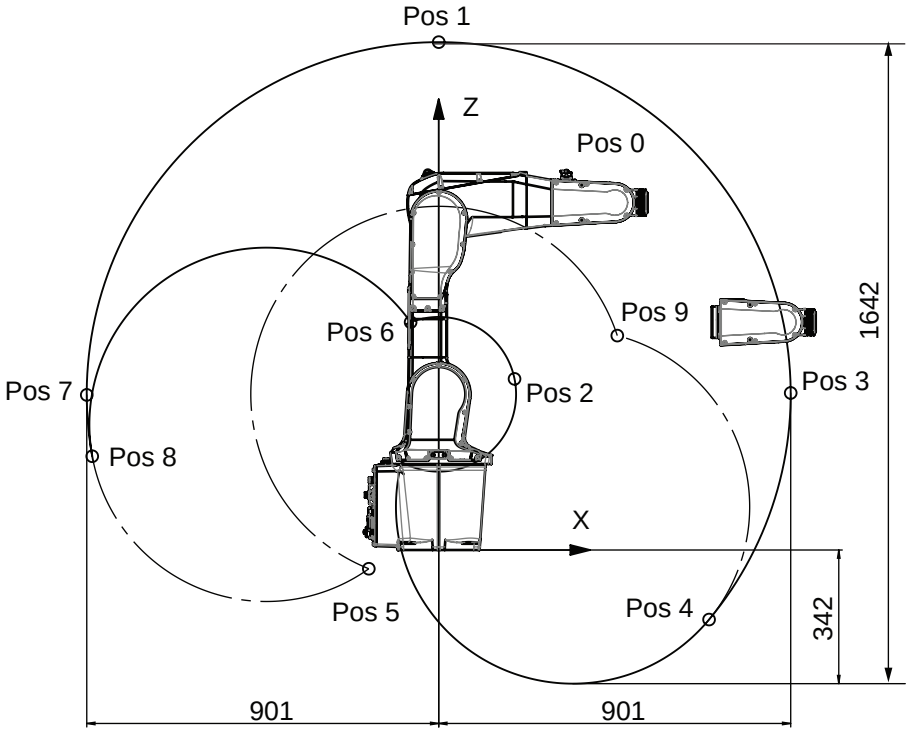

xx1300000387

Position in the figure	Positions at wrist center (mm)		Angle (degrees)	
	X	Z	Axis 2	Axis 3
Pos0	451	889	0º	0º
Pos1	0	1300	0º	-85º
Pos2	194	438	0º	+70º
Pos3	901	402	+90º	-85º
Pos4	692	-178	+130º	-85º
Pos5	-179	-48	-100º	-200º
Pos6	-72	583	-100º	+70º
Pos7	-901	397	-90º	-85º
Pos8	-887	240	-100º	-85º
Pos9	458	549	+130°	-200°

Continues on next page

© Copyright 2014 - 2017 ABB. All rights reserved.

Illustration, working range IRB 1200-7/0.7

IRB 1200-7/0.7 Working range, positions at wrist center and angle of axes 2 and 3

The illustration shows the unrestricted working range of the robot.

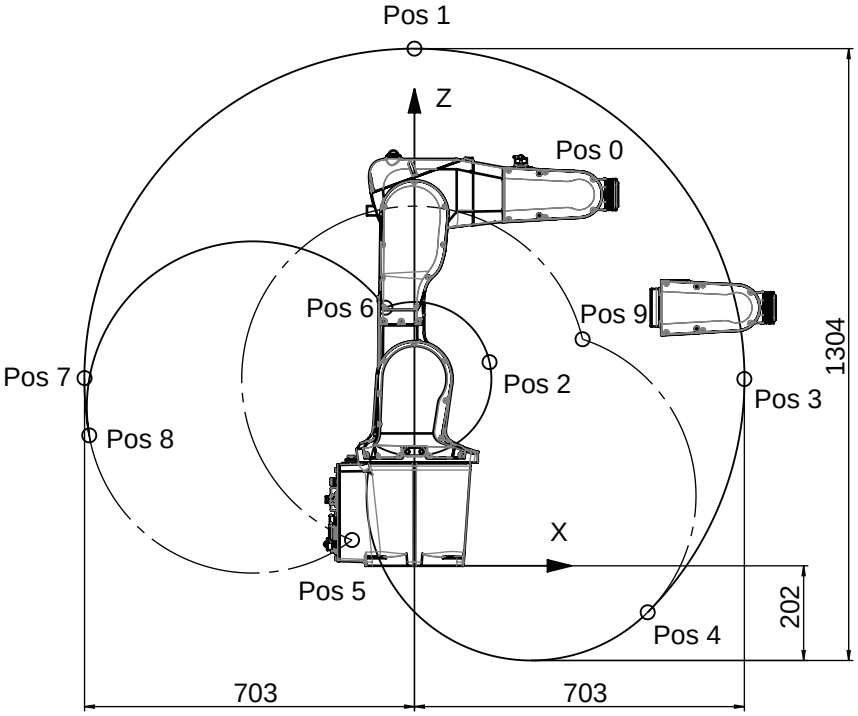

xx1300000386

Position in the figure	Positions at wrist center (mm)		Angle (degrees)	
	X	Z	Axis 2	Axis 3
Pos0	351	791	0º	0º
Pos1	0	1102	0º	-83º
Pos2	160	434	0º	+70º
Pos3	703	398	+90º	-83º
Pos4	497	-99	+135º	-83º
Pos5	-133	55	-100º	-200º
Pos6	-62	550	-100º	+70º
Pos7	-703	400	-90º	-83º
Pos8	-693	278	-100º	-83º
Pos9	358	488	+135°	-200°

Continues on next page

© Copyright 2014 - 2017 ABB. All rights reserved.

2.2.6 Working range
Continued

Minimum turning radius of axis 1

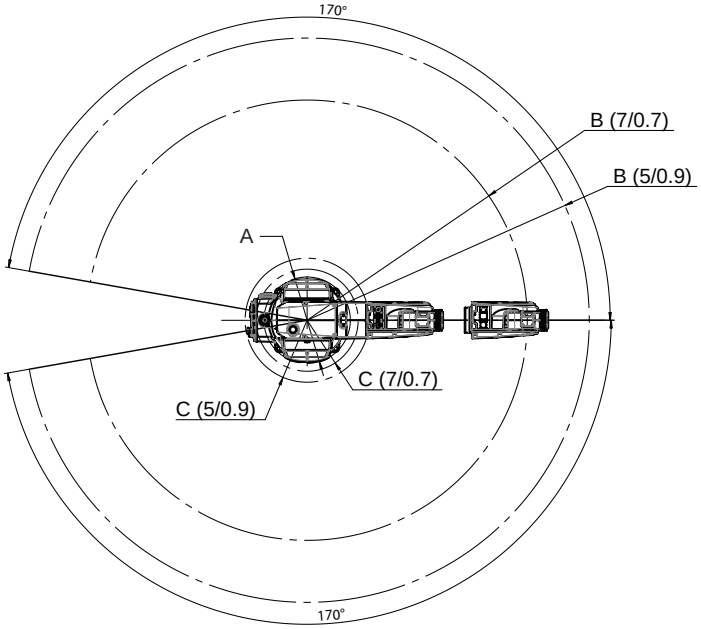

xx1400000681

Robot variant	Radius A	Radius B	Radius C
IRB 1200-5/0.9	138 mm [i]	901 mm	198 mm
IRB 1200-7/0.7	138 mm [i]	703 mm	163 mm

[i] Maximum turning radius of axis 1.

Working range

Axis	Type of motion	IRB 1200-7/0.7	IRB 1200-5/0.9
Axis 1	Rotation motion	+170° to -170°	+170° to -170°
Axis 2	Arm motion	+135° to -100°	+130° to -100°
Axis 3	Arm motion	+70° to -200°	+70° to -200°
Axis 4	Wrist motion	+270° to -270°	+270° to -270°
Axis 5	Bend motion	+130° to -130°	+130° to -130°
Axis 6	Turn motion	Default: +400° to -400° Maximum revolution: ±242[i]	Default: +400° to -400° Maximum revolution: ±242[i]

[i] The default working range for axis 6 can be extended by changing parameter values in the software. Option 610-1 Independent axis can be used for resetting the revolution counter after the axis has been rotated (no need for "rewinding" the axis).

© Copyright 2014 - 2017 ABB. All rights reserved.

2.2.7 Risk of tipping/stability

Risk of tipping

If the robot is not fastened to the foundation while moving the arm, the robot is not stable in the whole working area. Moving the arm will displace the center of gravity, which may cause the robot to tip over.

The shipping position is the most stable position.

Do not change the robot position before securing it to the foundation!

Shipping and transportation position

This figure shows the robot in its shipping position and transportation position.

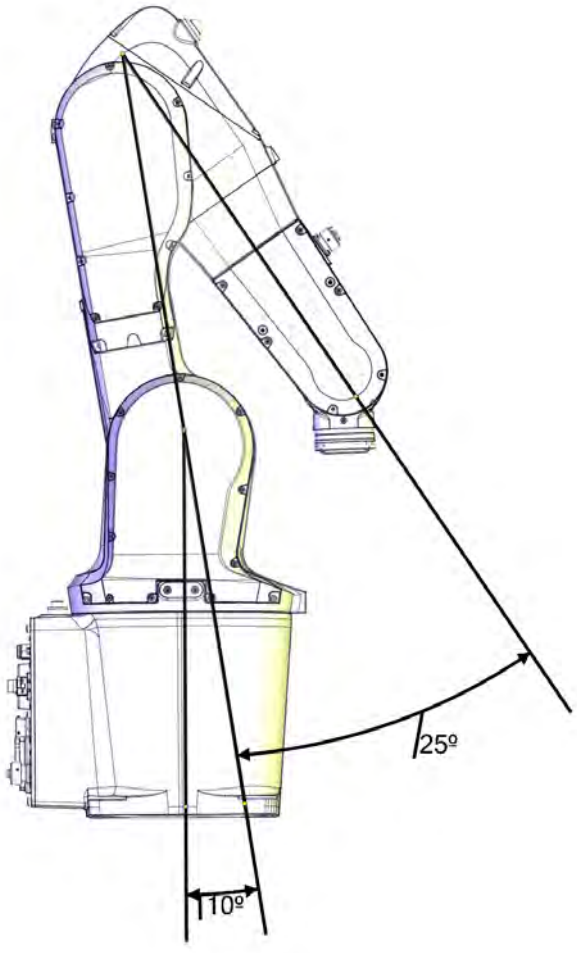

xx1400000500

Transportation bracket

A transportation bracket is installed and delivered together with the robot for securing the robot position during shipping and transportation. The transportation bracket must be removed before fitting the lifting accessory to the robot during the lifting of the robot to the installation site.

For details, see *Transportation bracket on page 59*.

Continues on next page

© Copyright 2014 - 2017 ABB. All rights reserved.

2.2.7 Risk of tipping/stability
Continued



WARNING

The robot is likely to be mechanically unstable if not secured to the foundation.

© Copyright 2014 - 2017 ABB. All rights reserved.

2.3 On-site installation

2.3.1 Lifting robot with roundslings

Attaching the roundslings

Note

A transportation bracket is installed and delivered together with the robot for securing the robot position during shipping and transport. The transportation bracket must be removed before fitting the lifting accessory to the robot during the lifting of the robot to the installation site.

For details, see *Transportation bracket on page 59*.

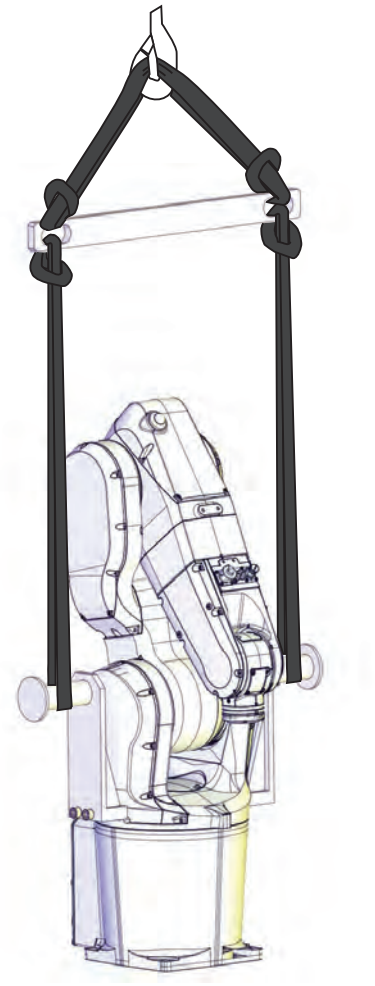

xx1400000501

Required equipment

Equipment, etc.	Article number	Note
Overhead crane	-	

Continues on next page

© Copyright 2014 - 2017 ABB. All rights reserved.

2.3.1 Lifting robot with roundslings
Continued

Equipment, etc.	Article number	Note
Roundsling, 0.6 m	-	2 pcs. Length: 0.6 m. Lifting capacity: 60 kg.
Roundsling, 1.5 m	-	2 pcs. Length: 1.5 m. Lifting capacity: 60 kg.
Lifting accessory, robot	3HAC049711-001	Includes lifting accessories, lifting beam and screws.

Lifting and turning the robot with roundslings

Use this procedure to lift the robot with roundslings.

	Action	Note
1	Move the robot to an appropriate lifting position. **WARNING** The robot is likely to be mechanically unstable if not secured to the foundation!	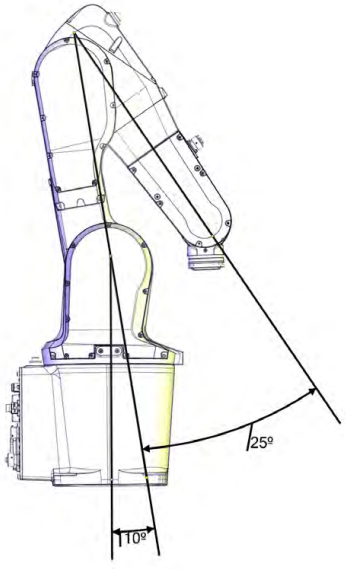 xx1400000500
2	**CAUTION** For Clean Room robots, it is important not to rub against the paint of the robot while fitting and lifting.	
3	**For robots with protection type Foundry Plus (option 287-3)** Remove the protection plugs in lifting holes.	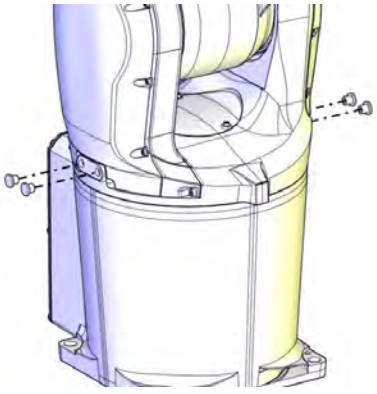 xx1600001147

Continues on next page

© Copyright 2014 - 2017 ABB. All rights reserved.

	Action	Note
4	Fit the lifting tools to the robot. Use the enclosed screws. **For robots with protection type Foundry Plus (option 287-3)** Use two M10 rubber washers, as circled in the figure, on the lifting holes at each side of the robot (4 pcs in total) for protection when fitting the lifting tools. **For robots with protection type Clean Room** Pay attention not to damage the swing sealing plug and the sealant covering the joint when fitting the lifting tools. 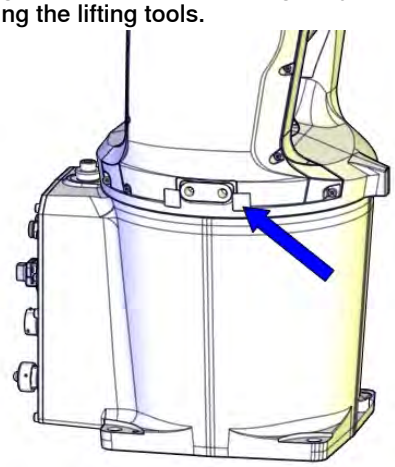 xx1600000205 Replace the swing sealing plug if damaged and seal the joint. See *Swing sealing plug for Clean Room robots and robots with food grade lubrication on page 143*. After the replacement, wipe clean.	Lifting accessory, robot: 3HAC049711-001 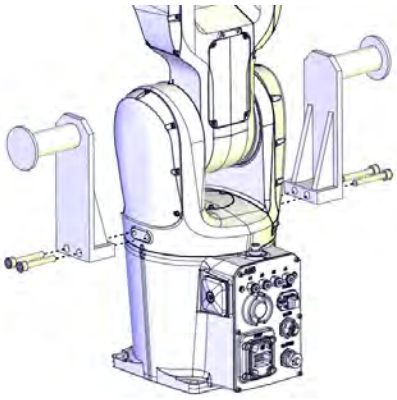 xx1400000498 Tightening torque: 15 Nm **For robots with protection type Foundry Plus (option 287-3)** 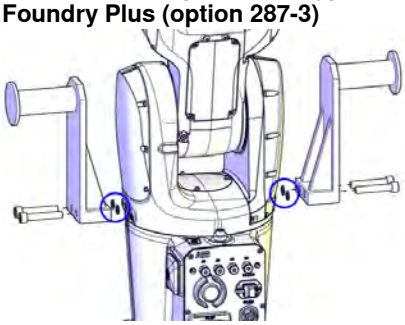 xx1600001177
5	Fit the roundslings to the lifting tools and attach them to the lifting beam.	Make sure the roundsling has free space and does not wear against any part of the robot. Roundsling, 1.5 m 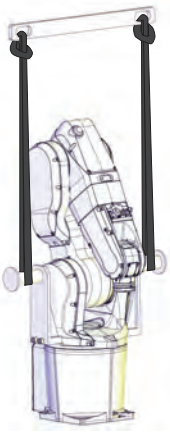 xx1400000511

Continues on next page

© Copyright 2014 - 2017 ABB. All rights reserved.

2.3.1 Lifting robot with roundslings
Continued

	Action	Note
6	Fit the roundslings to the lifting beam and to the overhead crane.	Roundsling, 0.6 m 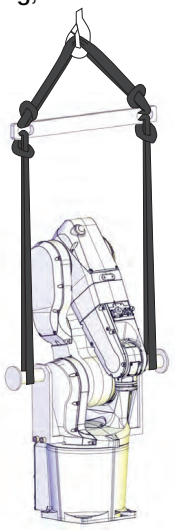 xx1400000501
7	**CAUTION** The IRB 1200 robot weighs . IRB 1200-5/0.9: 54 kg IRB 1200-7/0.7: 52 kg All lifting accessories used must be sized accordingly!	
8	**WARNING** Personnel must not, under any circumstances, be present under the suspended load!	
9	Raise the overhead crane to lift the robot.	
10	If the manipulator should be mounted on a wall, or in an suspended position the manipulator can now be tilted slowly by hand.	 xx1600000005

© Copyright 2014 - 2017 ABB. All rights reserved.

2.3.2 Lifting and turning a suspended mounted robot

Introduction

How to lift and turn the robot to a suspended position using the turning accessory is described in the lifting instruction delivered with the turning accessory. Article numbers for the accessory and the instruction is specified in *Special tools on page 809*. Any additional equipment required is specified in the instruction for the lifting accessory. Contact ABB for more information.

How to lift and turn the robot into position for **wall** position: *Contact ABB* for more information!

How to lift and turn the robot into position for **tilted** position: *Contact ABB* for more information!

© Copyright 2014 - 2017 ABB. All rights reserved.

2.3.3 Manually releasing the brakes

Introduction to manually releasing the brakes

This section describes how to release the holding brakes for the motors of each axis.

Location of brake release unit

The internal brake release unit is located as shown in the figure.

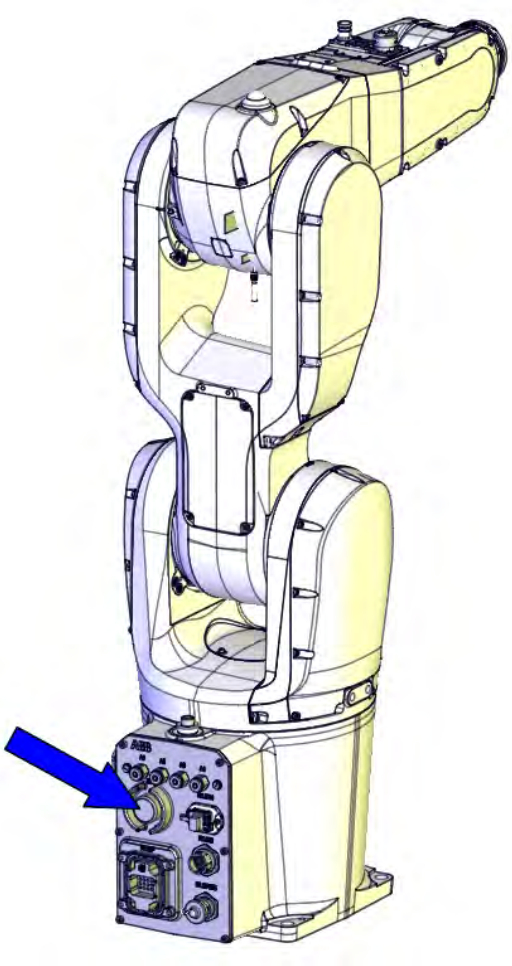

xx1400000030

Continues on next page

© Copyright 2014 - 2017 ABB. All rights reserved.

Releasing the brakes

This procedure details how to release the holding brakes when the robot is equipped with an internal brake release unit.

	Action	Note
1	The internal brake release unit is equipped with a button for controlling the axes brakes. If the robot is not connected to the controller, power must be supplied to the connector R1.MP according to the section *Supplying power to connector R1.MP on page 79*.	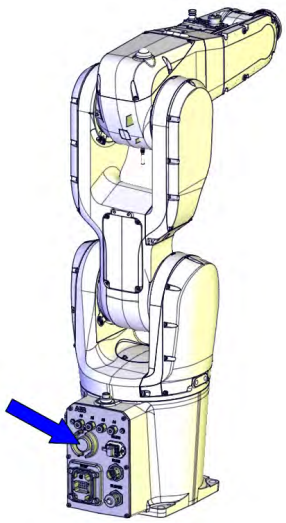 xx1400000030
2	**DANGER** When releasing the holding brakes, the robot axes may move very quickly and sometimes in unexpected ways! Make sure no personnel is near or beneath the robot arm!	
3	Release the holding brake on all robot axes by pressing the button on the internal brake release unit. The brake will function again as soon as the button is released.	

Supplying power to connector R1.MP

If the robot is not connected to the controller, power must be supplied to connector R1.MP on the robot in order to enable the brake release buttons.

	Action	Note
1	**DANGER** Incorrect connections, such as supplying power to the wrong pin, may cause all brakes to be released simultaneously!	

Continues on next page

© Copyright 2014 - 2017 ABB. All rights reserved.

2.3.3 Manually releasing the brakes

Continued

	Action	Note
2	Supply +24V on pin 11 and 0V on pin 12. **Note** Do not interchange the 24V and 0V pins. If they are mixed up, damage can be caused to the brake release unit and to the system board.	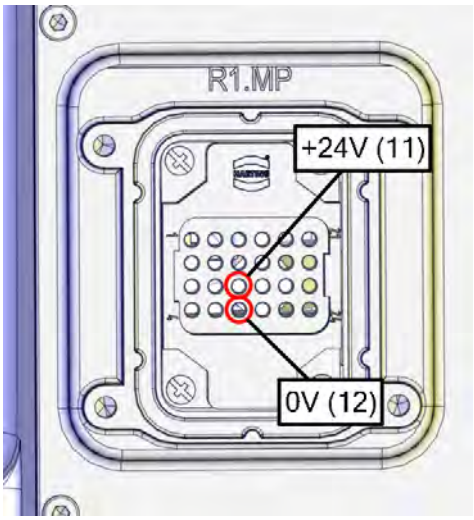 xx1400000031

© Copyright 2014 - 2017 ABB. All rights reserved.

2.3.4 Orienting and securing the robot

Introduction

This section details how to orient and secure the robot to the foundation or base plate in order to run the robot safely. The requirements made on the foundation are shown in sections:

- *Loads on foundation, robot on page 63*
- *Requirements, foundation on page 64*.

Hole configuration, base

The illustration shows the hole configuration used when securing the robot.

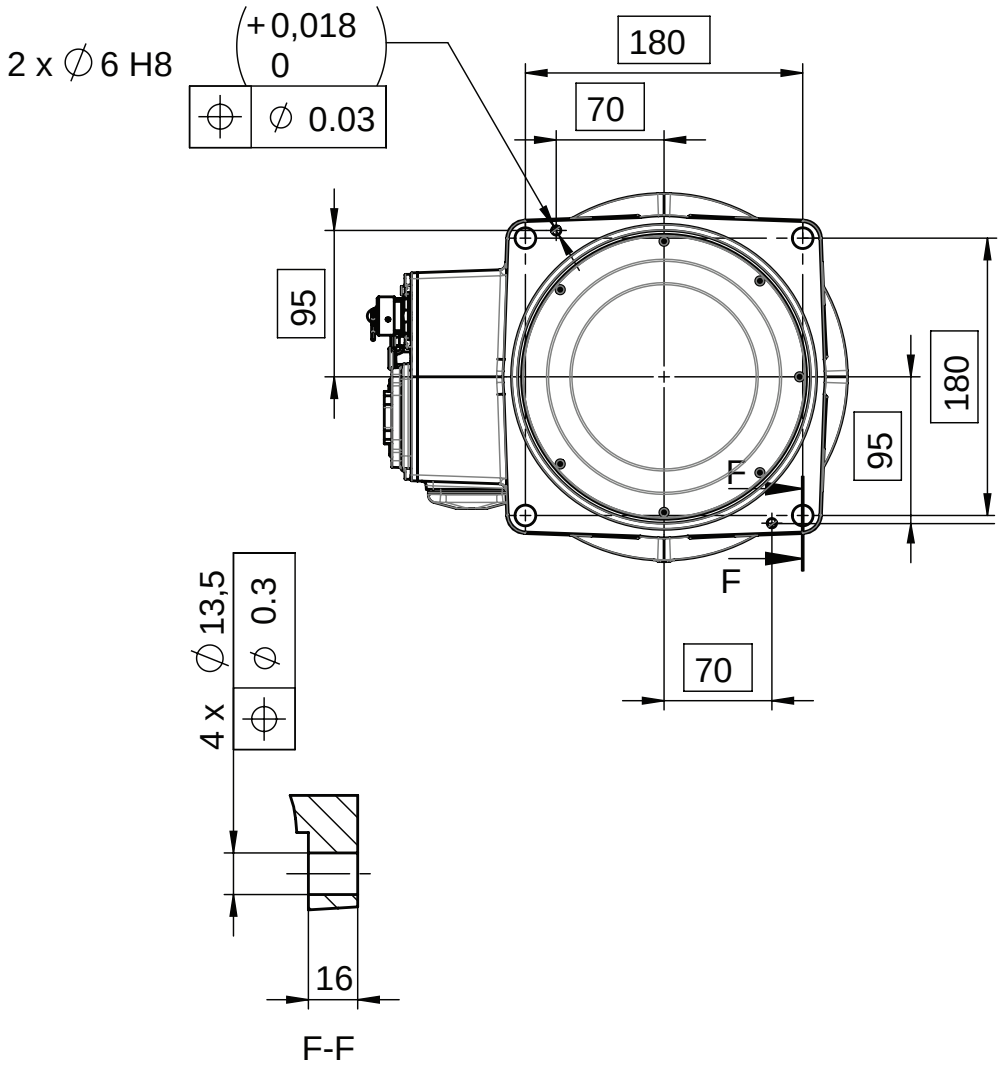

xx1300000368

Continues on next page

© Copyright 2014 - 2017 ABB. All rights reserved.

2.3.4 Orienting and securing the robot
Continued

Specification, attachment screws and pins

The table specifies the type of securing screws and washers to be used to secure the robot directly to the foundation. It also specifies the type of pins to be used.

Suitable screws	M12x35 (robot installation directly on foundation)
Quantity	4 pcs
Quality	8.8
Suitable washer	13 x 20 x 2, steel hardness class 300HV
Guide pins	2 pcs, D6x20, ISO 2338 - 6m6x20 - A1
Tightening torque	55 Nm ± 5 Nm
Level surface requirements	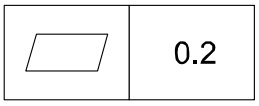 xx0900000643

Installation of extra O-ring for protection class IP67 and protection type Foundry Plus

For robots with protection class IP67 (option 287-10)

For robots with protection type FoundryPlus (option 287-3)

Manipulator cables routed from below (option 996-1)

The O-ring specified below is delivered together with the robot and must be installed to the bottom of the base during installation.

Equipment	Art. no.	Note
O-ring	3HAB3772-141	Used with protection class IP67. Used with protection type Foundry Plus. Used with manipulator cables routed from below (option 996-1) 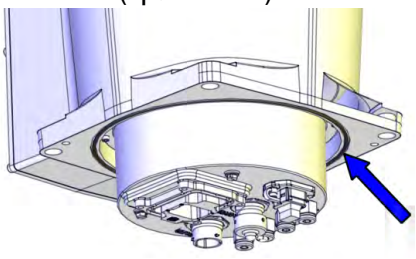 xx1500000241

Orienting and securing the robot

Use this procedure to orient and secure the robot.

	Action	Information
1	Make sure the installation site for the robot conforms to the specifications in section: • *Pre-installation procedure on page 62*.	
2	Prepare the installation site with attachment holes.	The hole configuration of the base is shown in the figure in: • *Hole configuration, base on page 81*

Continues on next page

© Copyright 2014 - 2017 ABB. All rights reserved.

	Action	Information
3	**CAUTION** The robot weighs . All lifting equipment must be sized accordingly! IRB 1200-5/0.9: 54 kg IRB 1200-7/0.7: 52 kg	
4	**CAUTION** When the robot is put down after being lifted or transported, there is a risk of it tipping, if not properly secured.	
5	Lift the robot to its installation site.	How to lift the robot is described in section: • *Lifting robot with roundslings on page 73*
6	**For robots with protection class IP67 (option 287-10)** **For robots with protection type Foundry Plus (option 287-3)** **Cabling routed from below (option 996-1)** Fit the O-ring 3HAB3772-141 to underneath the robot base.	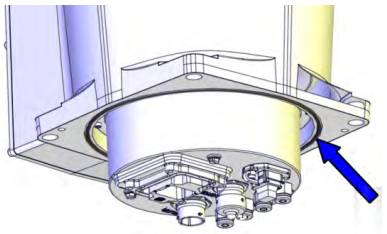 xx1500000241
7	Fit two *pins* to the holes in the base.	2 pcs, D6x20, ISO 2338 - 6m6x20 - A1
8	Guide the robot gently, using the attachment screws while lowering it into its mounting position.	Make sure the robot base is correctly fitted onto the pins.
9	Fit the *securing screws* and *washers* in the attachment holes of the base.	Screws: M12x35 (robot installation directly on foundation), quality: 8.8
10	Tighten the bolts in a criss-cross pattern to ensure that the base is not distorted.	Tightening torque: 55 Nm ± 5 Nm

Continues on next page

© Copyright 2014 - 2017 ABB. All rights reserved.

2.3.4 Orienting and securing the robot
Continued

	Action	Information
11	**For robots with protection class IP67 (option 287-10)** **For robots with protection type Foundry Plus (option 287-3)** Fit the O-ring 3HAB3772-19 to the main power connector on the robot base.	Robots with manipulator cables routed from the rear of the base: 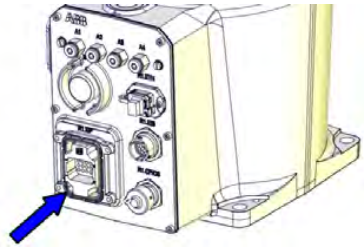 xx1500000243 Robots with manipulator cables routed from below (option 996-1): 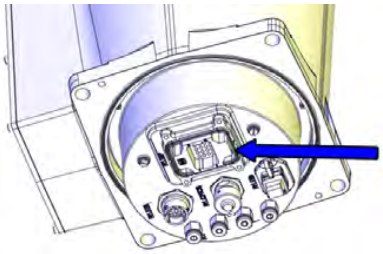 xx1500000242

Securing robot on a mounting plate

When bolting a mounting plate or frame to a concrete floor, follow the general instructions for expansion-shell bolts.

Screw joints must be able to withstand the stress loads defined in section *Loads on foundation, robot on page 63*.

© Copyright 2014 - 2017 ABB. All rights reserved.

2.3.5 Setting the system parameters for a suspended or tilted robot

General

The robot is configured for mounting parallel to the floor, without tilting, on delivery. The method for mounting the robot in a suspended (upside down) or tilted position is basically the same as for floor mounting, but the system parameters that describe the mounting angle (how the robot is oriented relative to the gravity) must be redefined.

Note

With suspended installation, make sure that the gantry or corresponding structure is rigid enough to prevent unacceptable vibrations and deflections, so that optimum performance can be achieved.

Note

The allowed mounting positions are described in the product specification for the robot. The requirements on the foundation are described in *Requirements, foundation on page 64*.

System parameters

Note

The mounting angle must be configured correctly in the system parameters so that the robot system can control the movements in the best possible way. An incorrect definition of the mounting angle will result in:

- Overloading the mechanical structure.
- Lower path performance and path accuracy.
- Some functions will not work properly, for example *Load Identification* and *Collision detection*.

Gravity Beta

If the robot is mounted upside down or on a wall (rotated around the y-axis), then the robot base frame and the system parameter *Gravity Beta* must be redefined. *Gravity Beta* should then be π (±3.141593) if the robot is mounted upside down (suspended), or ±π/2 (±3.141593/2) if mounted on a wall.

The *Gravity Beta* is a positive rotation direction around the y-axis in the base coordinate system. The value is set in radians.

Gravity Alpha

If the robot is mounted on a wall (rotated around the x-axis), then the robot base frame and the system parameter *Gravity Alpha* must be redefined. The value of *Gravity Alpha* should then be ±π/2 (±3.141593/2).

Continues on next page

© Copyright 2014 - 2017 ABB. All rights reserved.

2.3.5 Setting the system parameters for a suspended or tilted robot
Continued

The *Gravity Alpha* is a positive rotation direction around the x-axis in the base coordinate system. The value is set in radians.

Note

The system parameter *Gravity Alpha* is not supported for all robot types. It is not supported for IRB 140, IRB 1410, IRB 1600ID, IRB 2400, IRB 4400, IRB 6400R, IRB 6400 (except for IRB 6400 200/2.5 and IRB 6400 200/2.8), IRB 6600, IRB 6650, IRB 6650S and IRB 7600 (except for IRB 7600 325/3.1).

If the robot does not support *Gravity Alpha*, then use *Gravity Beta* along with the recalibration of axis 1 to define the rotation of the robot around the x-axis.

Note

The parameter is supported for all robots on track when the system parameter *7 axes high performance motion* is set, see *Technical reference manual - System parameters*.

Gamma Rotation

Gamma Rotation defines the orientation of the robot foot on the travel carriage (track motion).

Mounting angles and values

The parameter *Gravity Beta* (or *Gravity Alpha*) specifies the mounting angle of the robot in radians. It is calculated in the following way.

`Gravity Beta = A° x 3.141593/180 = B radians`, where `A` is the mounting angle in degrees and `B` is the mounting angle in radians.

Example of position	Mounting angle (A°)	Gravity Beta
Floor mounted	0°	0.000000 (Default)
Tilted mounting	45°	0.785398
Wall mounting	90°	1.570796
Suspended mounting	180°	3.141593

Continues on next page

© Copyright 2014 - 2017 ABB. All rights reserved.

Examples of mounting angles tilted around the Y axis (*Gravity Beta*)

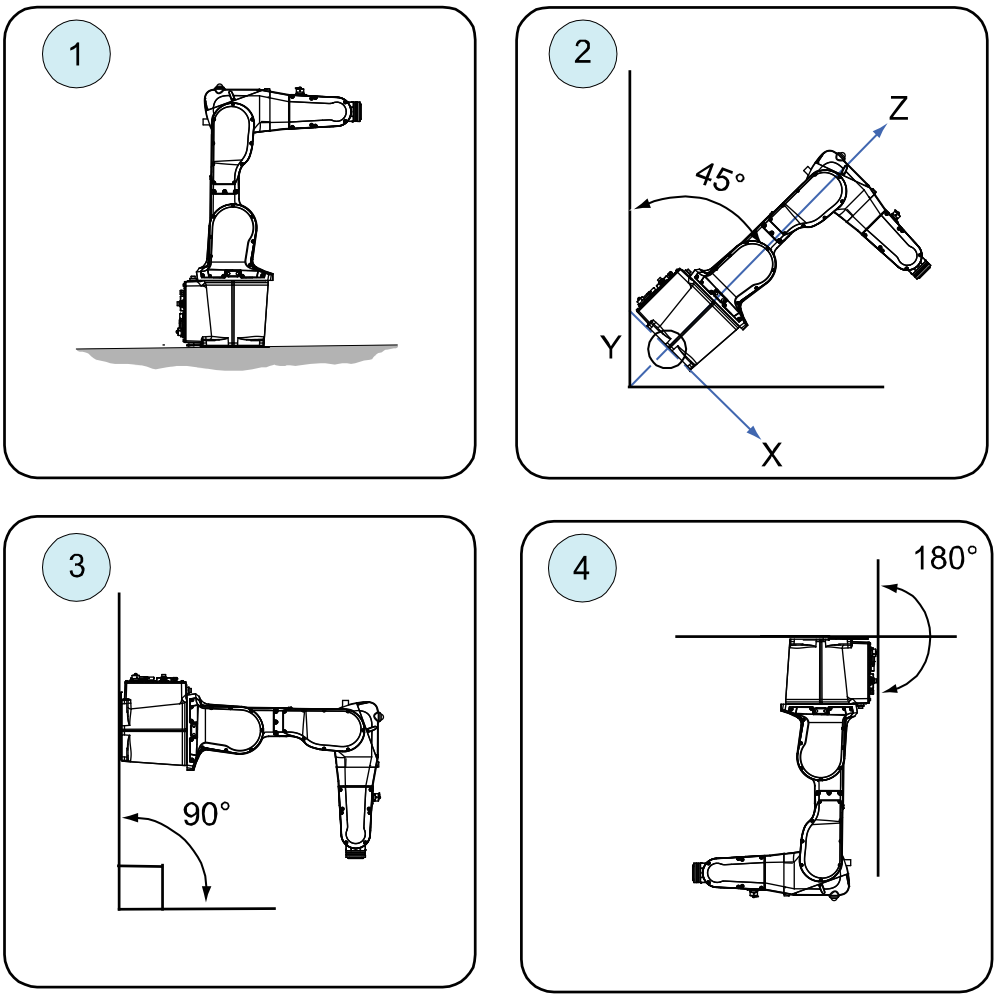

xx1400000682

Pos 1	Floor mounted
Pos 2	Mounting angle 45° (Tilted)
Pos 3	Mounting angle 90° (Wall)
Pos 4	Mounting angle 180° (Suspended)

Continues on next page

© Copyright 2014 - 2017 ABB. All rights reserved.

2.3.5 Setting the system parameters for a suspended or tilted robot
Continued

Examples of mounting angles tilted around the X axis (*Gravity Alpha*)

The following illustration shows the IRB 120, but the same principle applies for all robots.

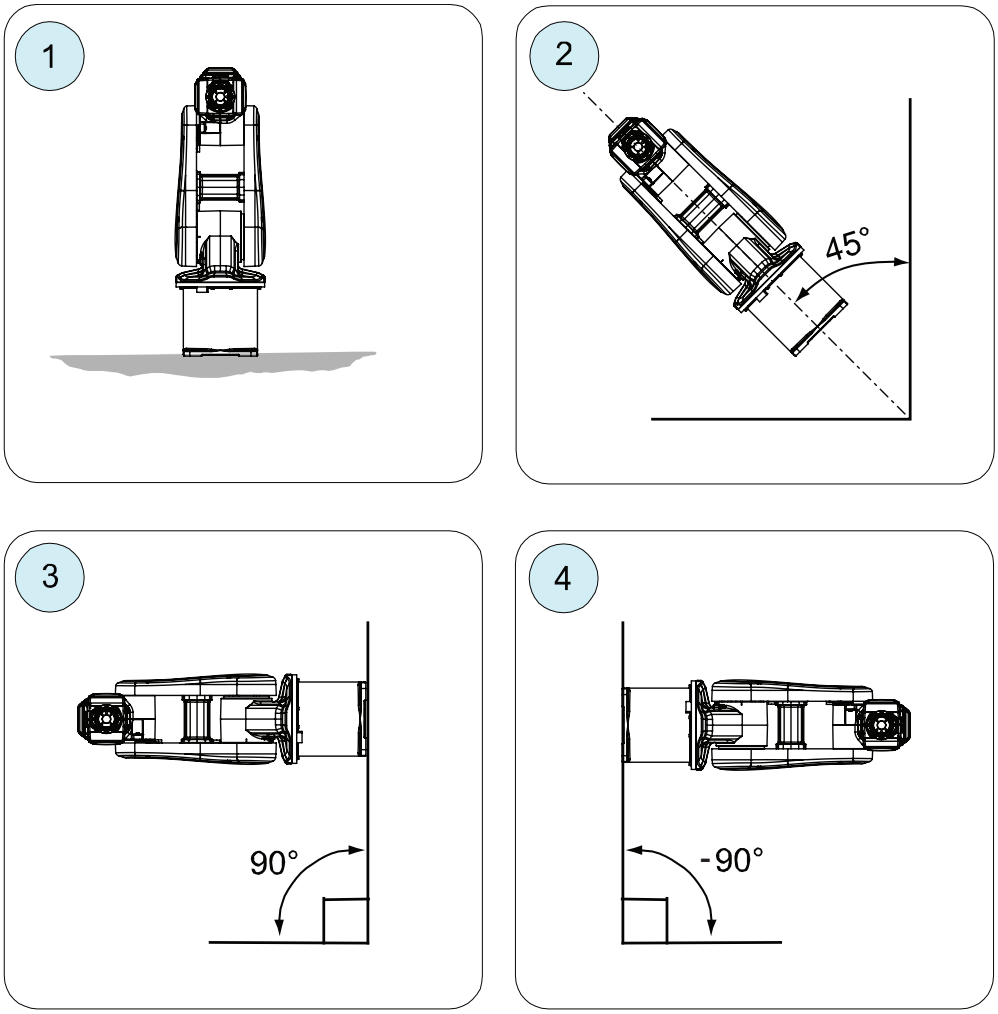

xx1500000532

Pos	Mounting angle	Gravity Alpha
1	0° (Floor mounted)	0
2	45° (Tilted)	0.785398
3	90° (Wall)	1.570796
4	-90° (Wall)	-1.570796

Note

For suspended robots (180°), it is recommended to use *Gravity Beta* instead of *Gravity Alpha*.

Continues on next page

© Copyright 2014 - 2017 ABB. All rights reserved.

Defining the parameter in the IRC5 software

The value of the system parameters that define the mounting angle must be redefined when changing the mounting angle of the robot. The parameters belong to the type *Robot*, in the topic *Motion*.

How to calculate a new value is detailed in *Mounting angles and values on page 86*.

The system parameters are described in *Technical reference manual - System parameters*.

The system parameters are redefined in the **Configuration Editor**, in RobotStudio or on the FlexPendant.

© Copyright 2014 - 2017 ABB. All rights reserved.

2.3.6 Loads fitted to the robot, stopping time and braking distances

General

Any loads mounted on the robot must be defined correctly and carefully (with regard to the position of center of gravity and mass moments of inertia) in order to avoid jolting movements and overloading motors, gears and structure.

CAUTION

Incorrectly defined loads may result in operational stops or major damage to the robot.

References

Load diagrams, permitted extra loads (equipment) and their positions are specified in the product specification. The loads must also be defined in the software as detailed in:

- *Operating manual - IRC5 with FlexPendant*

Stopping time and braking distances

The performance of the motor brake depends on if there are any loads attached to the robot. For more information, see product specification for the robot.

© Copyright 2014 - 2017 ABB. All rights reserved.

2.3.7 Fitting of equipment on the robot

2.3.7.1 Introduction to fitting of equipment

General

Extra loads can be mounted on to the upper arm. Definitions of load area and permitted load are shown in figure below. The center of gravity of the extra load shall be within the marked load areas. The robot is supplied with holes for fitting of extra equipment. (See *Holes for fitting extra equipment on page 92*).

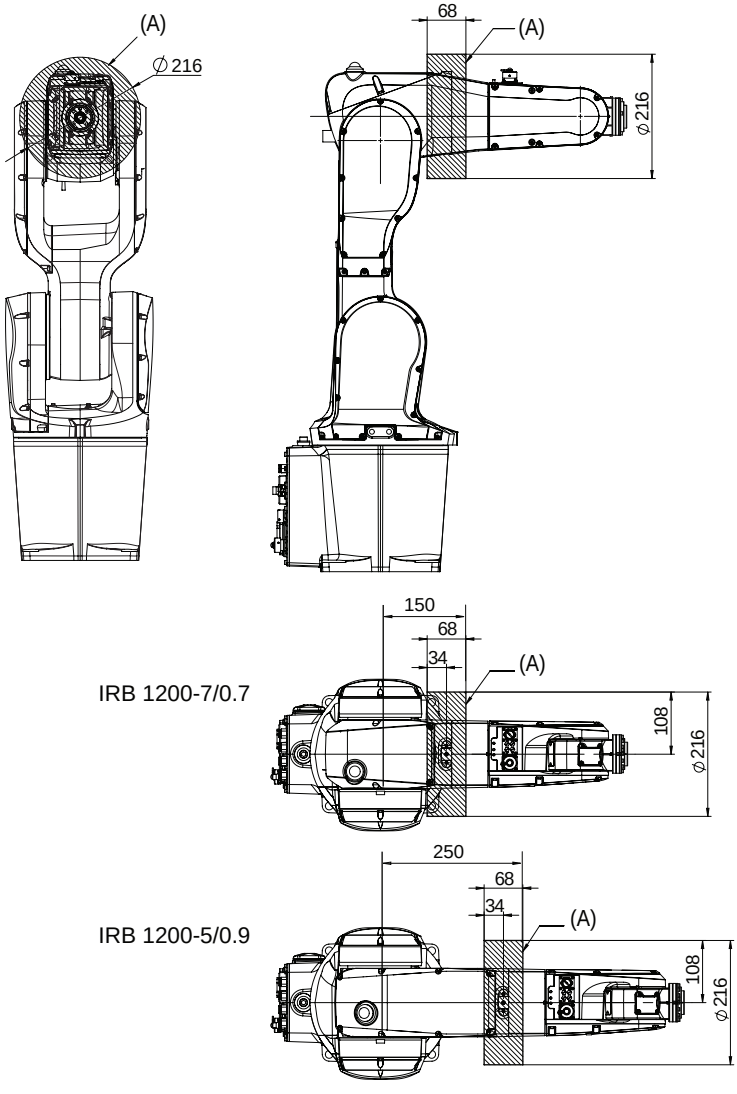

xx1300000384

Load area (A)	Max load
IRB 1200-5/0.9	0.3 kg
IRB 1200-7/0.7	

© Copyright 2014 - 2017 ABB. All rights reserved.

2.3.7.2 Holes for fitting extra equipment

Upper arm

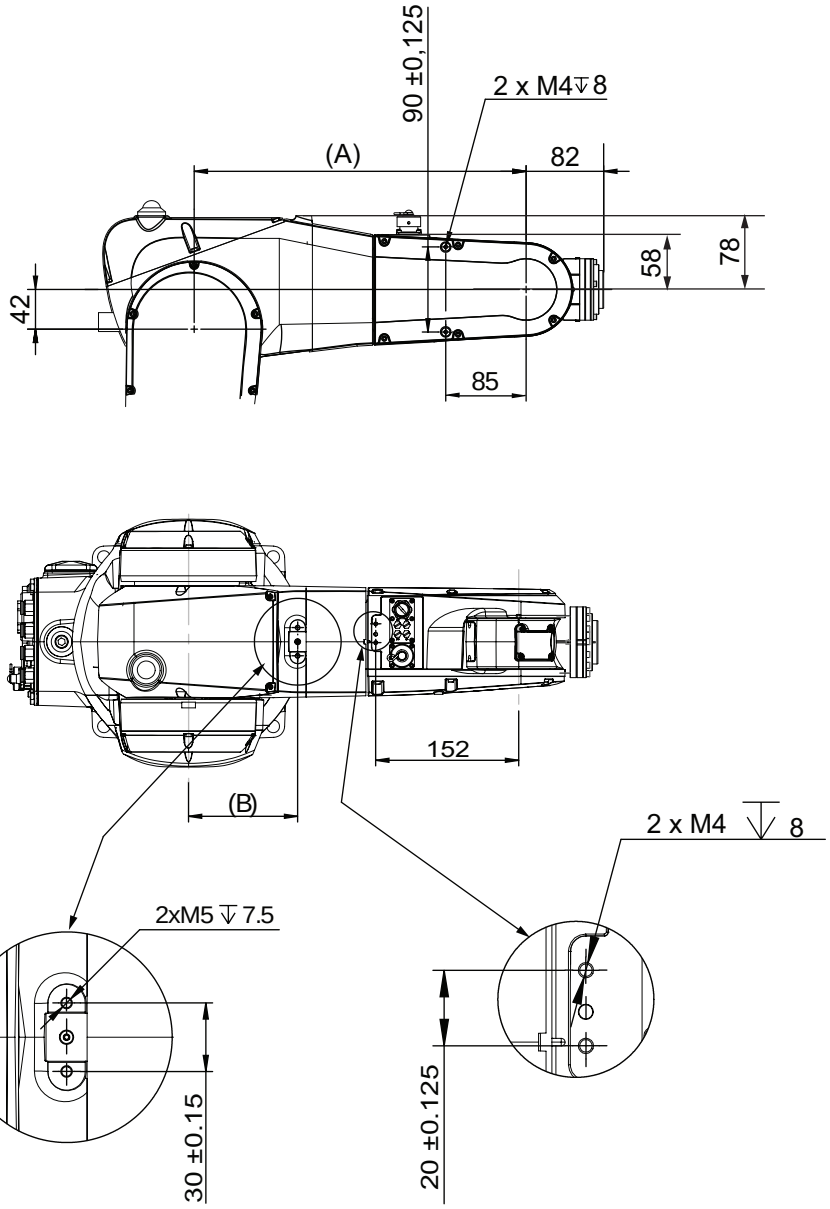

xx1300000381

Pos	Description
A	IRB 1200-5/0.9 = 451 mm, IRB 1200-7/0.7 = 351 mm
B	IRB 1200-5/0.9 = 216 mm, IRB 1200-7/0.7 = 116 mm

Continues on next page

© Copyright 2014 - 2017 ABB. All rights reserved.

Lower arm

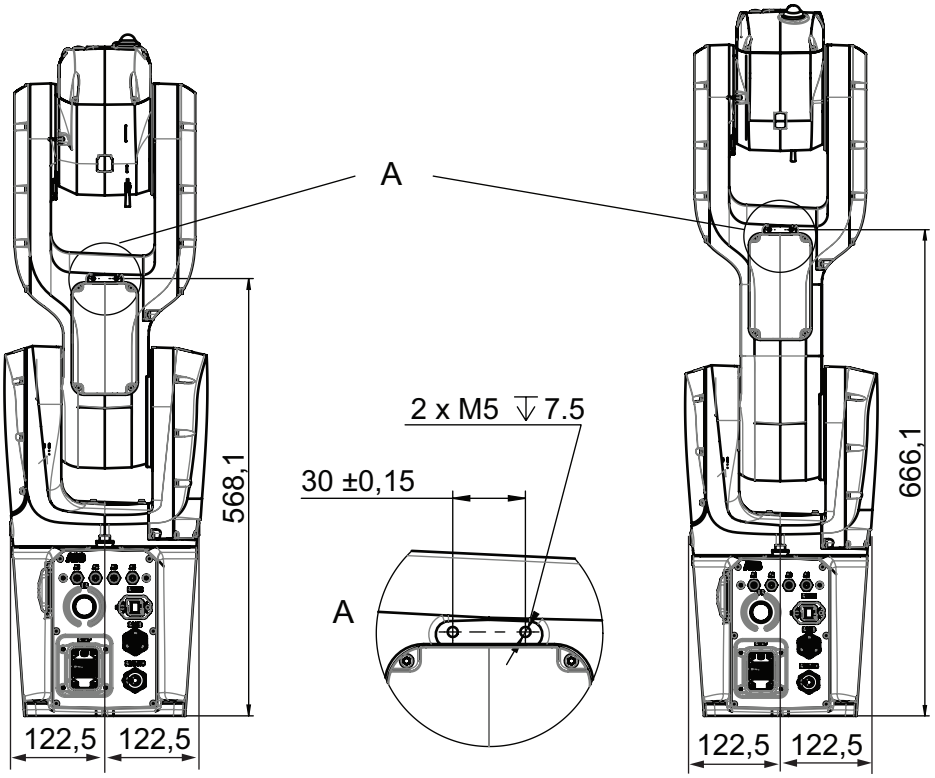

xx1300000382

Continues on next page

© Copyright 2014 - 2017 ABB. All rights reserved.

2.3.7.2 Holes for fitting extra equipment
Continued

Frame

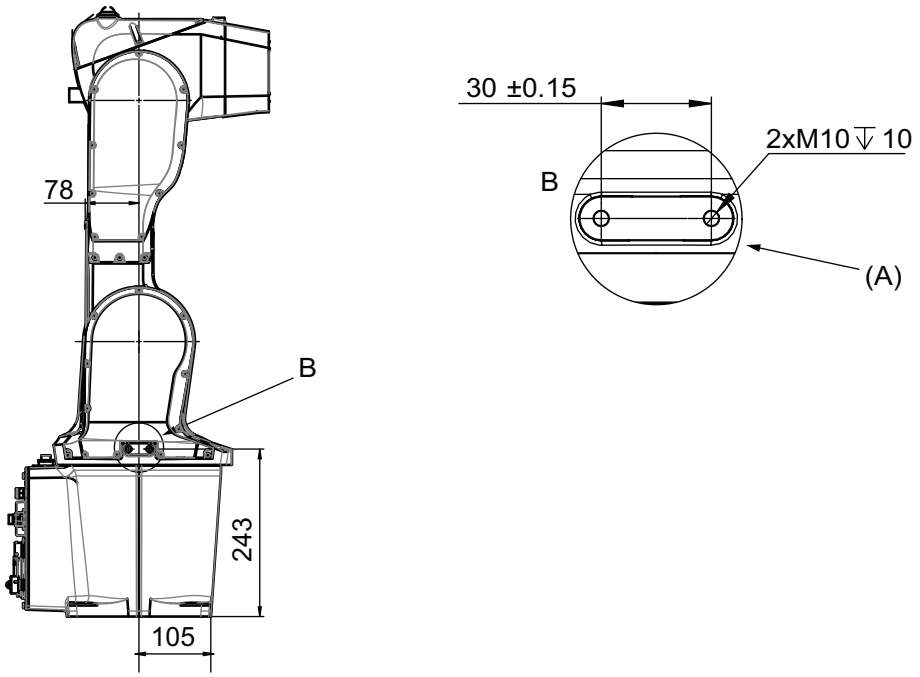

xx1400000590

Pos	Description
A	Holes on both sides

Robot tool flange

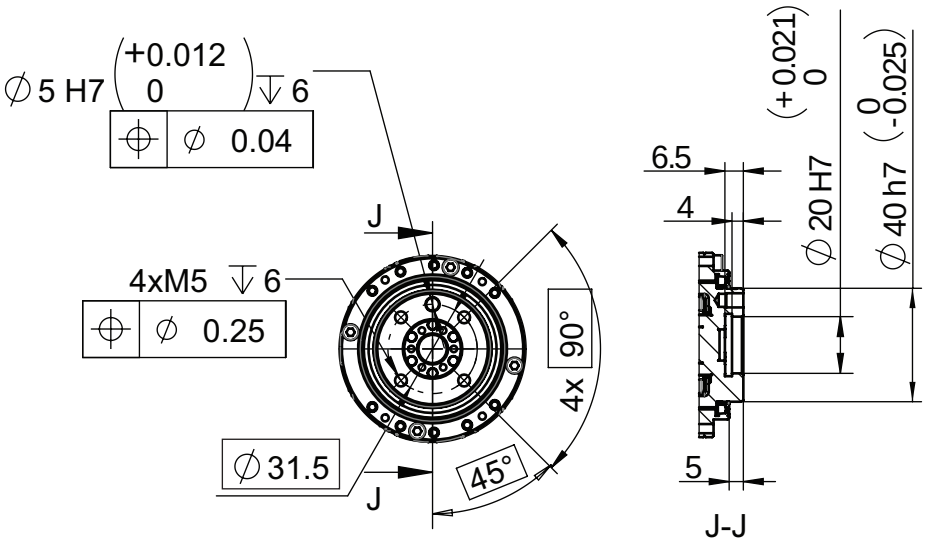

xx1300000383

Continues on next page

© Copyright 2014 - 2017 ABB. All rights reserved.

Robot tool flange for Foundry Plus robots

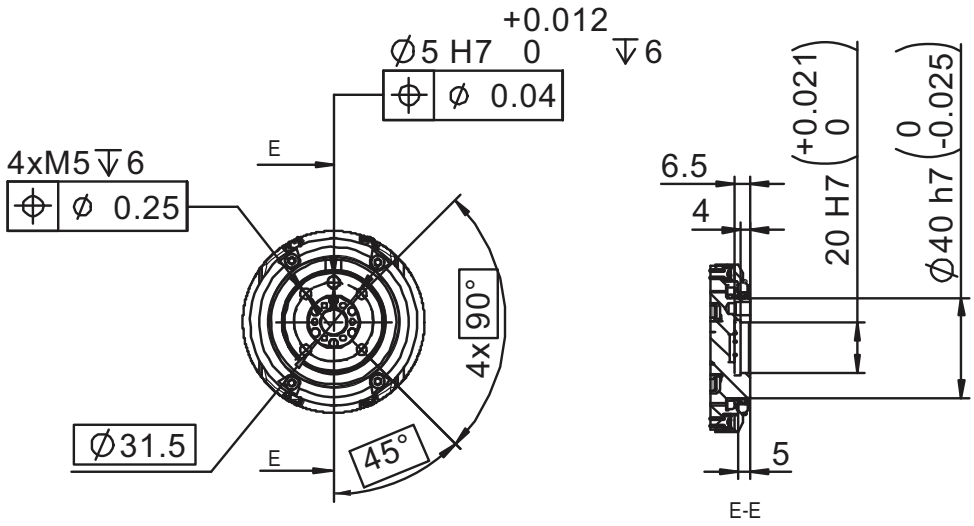

xx1600001322

© Copyright 2014 - 2017 ABB. All rights reserved.

2.4 Installation of options

2.4.1 Installing the signal lamp

General

A signal lamp with an yellow fixed light can be mounted on the robot, as a safety device. The signal lamp is required on an UL/UR approved robot.

The lamp is active in MOTORS ON mode.

Location of signal lamp

The signal lamp is located as shown in the figure.

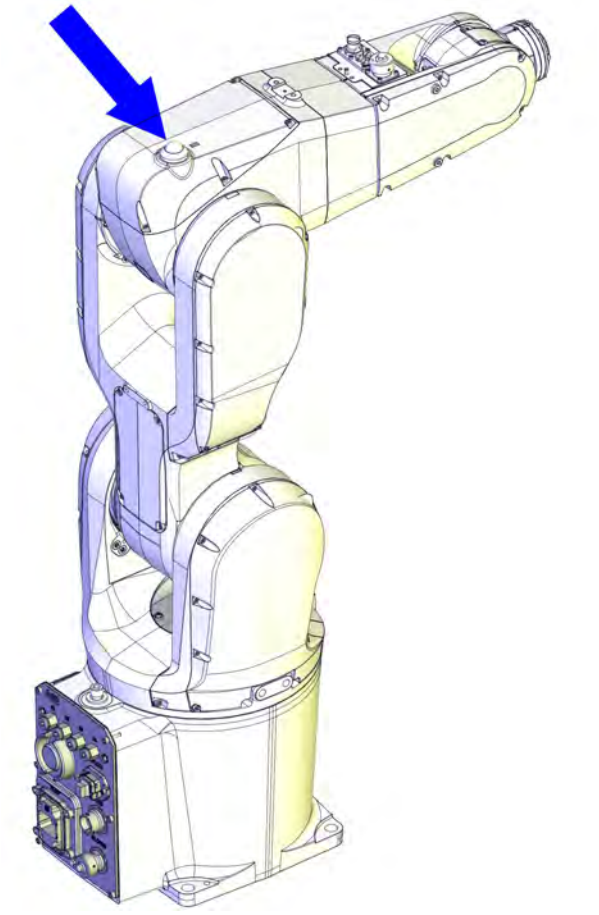

xx1300000455

Required spare parts

Spare part	Article number	Note
Signal lamp	3HAC16738-1	

Continues on next page

© Copyright 2014 - 2017 ABB. All rights reserved.

Required tools

Equipment, etc.	Article number	Note
Standard toolkit	-	Content is defined in section *Standard toolkit on page 808*.

Installing the signal lamp

	Action	Note
1	**DANGER** Turn off all: • electric power supply • hydraulic pressure supply • air pressure supply to the robot, before entering the robot working area.	
2	**CAUTION** For robots with protection type Clean Room: Always cut the paint with a knife and grind the paint edge when disassembling parts of the robot! See *Replacing parts on the robot on page 138*	
3	Remove the cover from the upper arm housing.	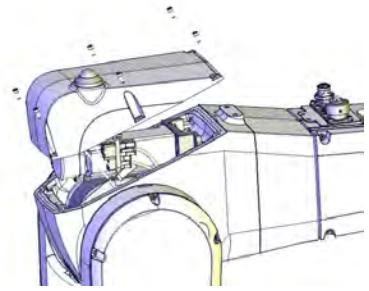 xx1300000464
4	Drill a hole with a diameter of 22.5 mm in the center of the raised platform.	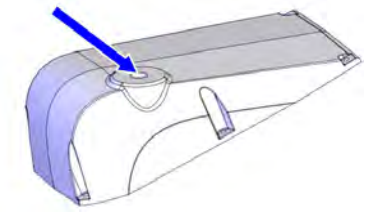 xx1300000465
5	Fit the lamp and tighten the nut.	
6	Connect the two lamp cables connectors (R3.H1 and R3.H2) to the cable harness lamp connectors (H1 and H2).	

Continues on next page

© Copyright 2014 - 2017 ABB. All rights reserved.

2.4.1 Installing the signal lamp

Continued

	Action	Note
7	Refit the cover on the upper arm housing.	Screws: 3HAB3409-207 (M3x8). Tightening torque: 1.5 Nm. 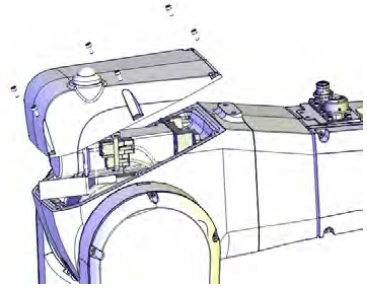 xx1300000456 **Note** Only use specified screws, never replace them with other screws.
8	Clean Room robots: seal and paint the joints that have been opened. See *Replacing parts on the robot on page 138* **Note** After all repair work, wipe the robot free from particles with spirit on a lint free cloth.	
9	The signal lamp is now ready for use and is lit in MOTORS ON mode.	

© Copyright 2014 - 2017 ABB. All rights reserved.

2.5 Making robot ready for operation

2.5.1 Additional installation procedure, Clean Room

General

Robots with protection type Clean Room are specially designed to work in a clean room environment.

Clean Room robots are designed to prevent from particle emission from the robot. For example, the maintenance work possible to perform without cracking the paint. The robot is painted with four layers of polyurethane paint. The last layer being a varnish over labels to simplify cleaning. The paint has been tested regarding outgassing of Volatile Organic Compounds (VOC) and been classified in accordance with ISO 14644-8.

Any Clean Room parts that are replaced must be replaced with parts designed for use in Clean Room environments.

Clean Room class 3

According to **IPA test result**, the robot IRB 1200 is suitable for use in Clean Room environment when these requirements are fulfilled:

- Air cleanliness Class 3 according to ISO 14644-1, when operated at a velocity of 50%.
- Air cleanliness Class 2 according to ISO 14644-1, when operated at a velocity of 100%.

Classification of airborne molecular contamination

Parameter				Outgassing amount		
Area (m^2)	Test duration (s)	Temp (°C)	Performed test	Total detected (ng)	Norm based on 1m^2 and 1s(g)	Classification in accordance to ISO 14644-8
4.5E-03	3600	23	TVOC	2848	1.7E-07	-6.8
4.5E-03	60	90	TVOC	46524	1.7E-04	-3.8

Preparations before commissioning a Clean Room robot

During transport and handling of a Clean Room robot, it is likely that the robot has been contaminated with particles of different kinds. Therefore the robot must be carefully cleaned before installation.

Do not apply force on the plastic covers when lifting the robot! This may result in damage or cracks in the paint around the plastic cover.

© Copyright 2014 - 2017 ABB. All rights reserved.

2.6 Electrical connections

2.6.1 Robot cabling and connection points

Introduction

Connect the robot and controller to each other after securing them to the foundation. The lists below specify which cables to use for each respective application.

Main cable categories

All cables between the robot and controller are divided into the following categories:

Cable category	Description
Robot cables	Handles power supply to and control of the robot's motors as well as feedback from the encoder interface board. Specified in the table *Robot cables on page 100*.
Customer cables (option)	Handles communication with equipment fitted on the robot by the customer (low voltage signals). The customer cables also handle Ethernet communication. See the product manual for the controller, see document number in *References on page 10*.

Robot cables

These cables are included in the standard delivery. They are completely pre-manufactured and ready to plug in.

Cable sub-category	Description	Connection point, cabinet	Connection point, robot
Robot cable, power	Transfers drive power from the drive units in the control cabinet to the robot motors.	XS1	R1.MP
Robot cable, signals	Transfers encoder data from and power supply to the encoder interface board. Transfers resolver data from and power supply to the serial measurement board.	XS2	R1.EIB

Robot cable, power

Power cable length	Article number
3 m	3HAC040503-007
7 m	3HAC040503-001
15 m	3HAC040503-002
22 m	3HAC040503-003
30 m	3HAC040503-004

Robot cable, signals

Signal cable length	Article number
3 m	3HAC035320-001

Continues on next page

© Copyright 2014 - 2017 ABB. All rights reserved.

Signal cable length	Article number
7 m	3HAC2493-1
15 m	3HAC2530-1
22 m	3HAC2540-1
30 m	3HAC2566-1

Grounding and bonding point on manipulator

There is a grounding/bonding point on the manipulator base. The grounding/bonding point is used for potential equalizing between control cabinet, manipulator and any peripheral devices.

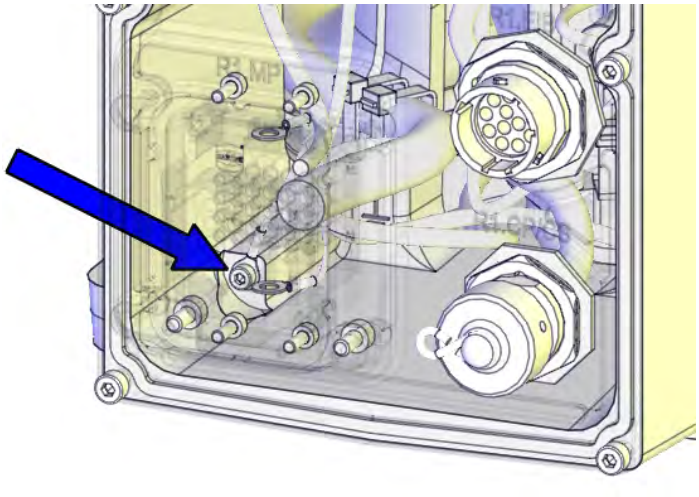

xx1600001081

Installation of extra O-ring for protection class IP67 and protection type Foundry Plus

For robots with protection class IP67 (option 287-10)

For robots with protection type FoundryPlus (option 287-3)

Continues on next page

© Copyright 2014 - 2017 ABB. All rights reserved.

2.6.1 Robot cabling and connection points
Continued

The O-ring specified below is delivered together with the robot and must be installed to the main power connector during electrical installation.

Equipment	Art. no.	Note
O-ring	3HAB3772-19	For robots with protection class IP67 (option 287-10) Used with protection type Foundry Plus (option 287-3). Used to seal between the main power cable and the connector. Robots with manipulator cables routed from the rear of the base: 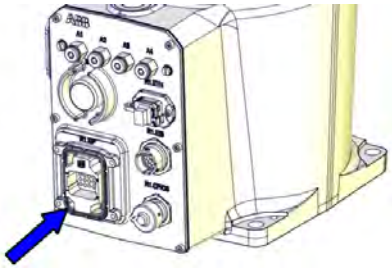 xx1500000243 Robots with manipulator cables routed from below (option 996-1): 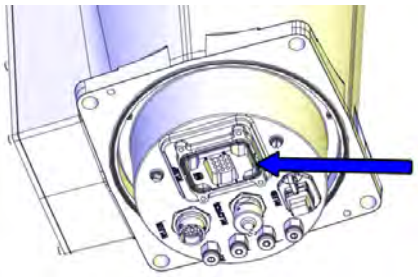 xx1500000242

Customer cables - CP/CS cable (option)

CP/CS cable length	Article number
3 m (IRC5)	3HAC049089-001
7 m (IRC5)	3HAC049089-004
15 m (IRC5)	3HAC049089-005
22 m (IRC5)	3HAC049089-006
30 m (IRC5)	3HAC049089-007
3 m (IRC5C)	3HAC049186-001
7 m (IRC5C)	3HAC049186-004
15 m (IRC5C)	3HAC049186-005
22 m (IRC5C)	3HAC049186-006
30 m (IRC5C)	3HAC049186-007

Continues on next page

© Copyright 2014 - 2017 ABB. All rights reserved.

Customer cables - Ethernet floor cable (option)

Ethernet floor cable length	Article number
3 m	3HAC055518-001
7 m	3HAC055518-002
15 m	3HAC055518-003
22 m	3HAC055518-004
30 m	3HAC055518-005

© Copyright 2014 - 2017 ABB. All rights reserved.

This page is intentionally left blank

3 Maintenance

3.1 Introduction

Structure of this chapter

This chapter describes all the maintenance activities recommended for the IRB 1200.

It is based on the maintenance schedule found at the beginning of the chapter. The schedule contains information about required maintenance activities including intervals, and refers to procedures for the activities.

Each procedure contains all the information required to perform the activity, including required tools and materials.

The procedures are gathered in different sections and divided according to the maintenance activity.

Safety information

Observe all safety information before conducting any service work!

There are general safety aspects that must be read through, as well as more specific safety information that describes the danger and safety risks when performing the procedures. Read the chapter *Safety on page 17* before performing any service work!

Note

If the IRB 1200 is connected to power, always make sure that the IRB 1200 is connected to protective earth before starting any maintenance work!

For more information see:

- *Product manual - IRC5*
- *Product manual - IRC5 Compact*

© Copyright 2014 - 2017 ABB. All rights reserved.

3.2 Maintenance schedule

3.2.1 Specification of maintenance intervals

Introduction

The intervals are specified in different ways depending on the type of maintenance activity to be carried out and the working conditions of the IRB 1200:

- Calendar time: specified in months regardless of whether the system is running or not.
- Operating time: specified in operating hours. More frequent running means more frequent maintenance activities.

© Copyright 2014 - 2017 ABB. All rights reserved.

3.2.2 Maintenance schedule

Scheduled and non-predictable maintenance

The robot must be maintained regularly to ensure proper function. The maintenance activities and intervals are specified in the table below.

Non-predictable situations also give rise to inspections of the robot. Any damages must be attended to immediately!

Life of each component

The inspection intervals *do not* specify the life of each component.

Activities and intervals, standard equipment

The table below specifies the required maintenance activities and intervals:

Maintenance activities	Regularly [i]	Every 12 months	Every 36 months	Reference
Cleaning activities				
Cleaning the robot	x			*Cleaning the IRB 1200 on page 133*
Inspection activities				
Inspecting the robot	x			Check for abnormal wear or contamination. For robots with protection type Clean Room: Inspect daily
Inspecting the robot cabling [ii]	x [iii]			*Inspecting the robot cabling on page 109*
Inspecting the information labels		x		*Inspecting the information labels on page 110*
Inspecting the axis-1 mechanical stop pin	x [iv]			*Inspecting mechanical stops on page 115*
Inspecting the axis-2 mechanical stop	x [iv]			*Inspecting mechanical stops on page 115*
Inspecting the axis-3 mechanical stop	x [iv]			*Inspecting mechanical stops on page 115*
Inspecting the axis-4 mechanical stop	- [v]			
Inspecting the timing belts			x	*Inspecting timing belts on page 118*
Replacement/changing activities				

Continues on next page

© Copyright 2014 - 2017 ABB. All rights reserved.

3.2.2 Maintenance schedule
Continued

Maintenance activities	Regularly [i]	Every 12 months	Every 36 months	Reference
Replacing the battery pack [vi]				*Replacing the battery pack on page 123*

i "Regularly" implies that the activity is to be performed regularly, but the actual interval may not be specified by the robot manufacturer. The interval depends on the operation cycle of the robot, its working environment and movement pattern. Generally, the more contaminated environment, the shorter intervals. The more demanding movement pattern (sharper bending cable harness), the shorter intervals.

ii The robot cabling comprises the cabling between the robot and controller cabinet.

iii Replace when damage or cracks is detected or life limit is approaching.

iv Inspect immidiately if the mechanical stop is hit.

v Inspect immidiately if the mechanical stop is hit.

The robot needs to be disassembled according to section *Replacing the axis-4 mechanical stop on page 411* in order to get access to and inspect the mechanical stop.

vi The battery low alert (38213 **Battery charge low**) is displayed when remaining backup capacity (robot powered off) is less than 2 months. Typical life of a new battery is 36 months if the robot is powered off 2 days/week, or 18 months if the robot is powered off 16 hours/day. The life can be extended (approximately 3 times) for longer production breaks by a battery shutdown service routine. See *Operating manual - IRC5 with FlexPendant*.

See the replacement instruction for more details.

Activities and intervals, optional equipment

The table below specifies the required maintenance activities and intervals:

Maintenance activities	Every 12 months	Reference
Inspection activities		
Inspecting the signal lamp	x	*Inspecting the signal lamp (option) on page 121*

© Copyright 2014 - 2017 ABB. All rights reserved.

3.3 Inspection activities

3.3.1 Inspecting the robot cabling

Introduction

CAUTION

Always read the specific instructions if the robot has protection type Clean Room, before doing any repair work, see *Replacing parts on the robot on page 138*

Location of robot cabling

The robot cabling comprises the cabling between the robot and controller cabinet.

Required tools and equipment

Visual inspection, no tools are required.

Other tools and procedures may be required if the spare part needs to be replaced. These are specified in the replacement procedure.

Inspection, robot cabling

Use this procedure to inspect the robot cabling.

	Action	Note
1	**DANGER** Turn off all: • electric power supply to the robot • hydraulic pressure supply to the robot • air pressure supply to the robot Before entering the robot working area.	
2	Visually inspect: • the control cabling between the robot and control cabinet Look for abrasions, cuts or crush damages.	
3	Replace the cabling if wear or damage is detected.	

© Copyright 2014 - 2017 ABB. All rights reserved.

3.3.2 Inspecting the information labels

Location of labels

These figures show the location of the information labels to be inspected. The symbols are described in section *Safety symbols on product labels on page 41*.

Illustration 1 of 2

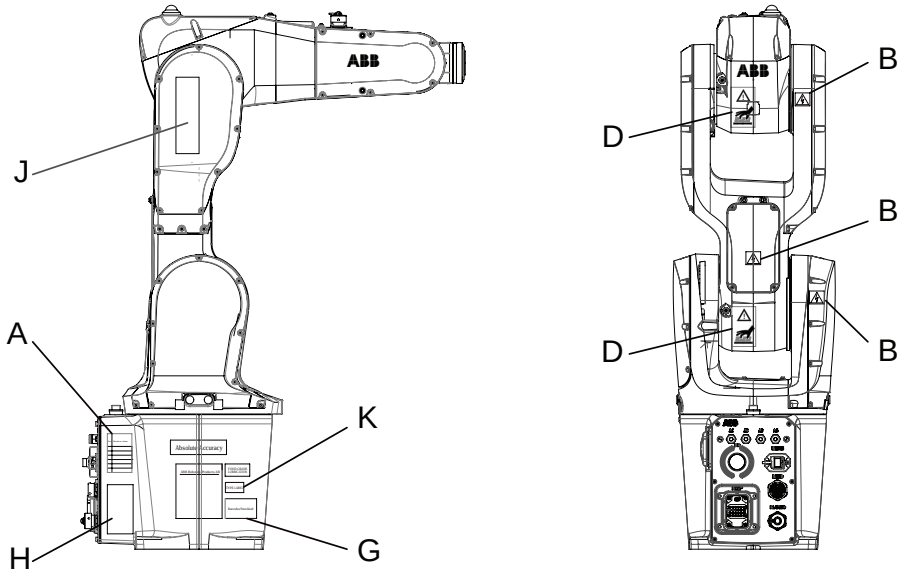

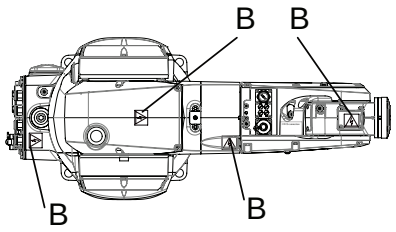

IRB 1200-7/0.7

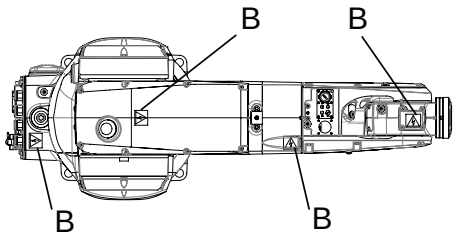

IRB 1200-5/0.9

Continues on next page

© Copyright 2014 - 2017 ABB. All rights reserved.

Illustration 2 of 2

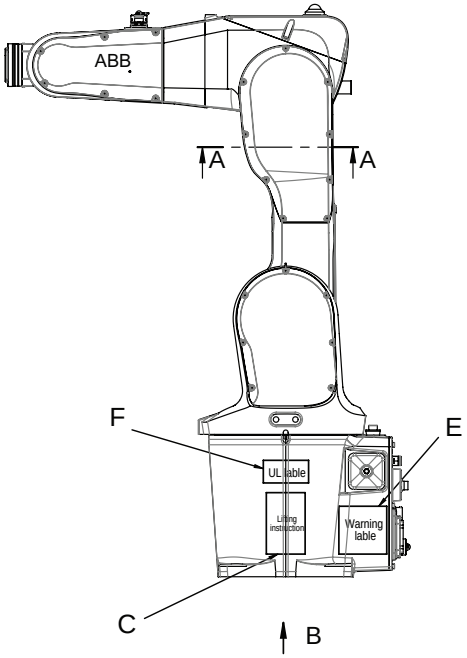

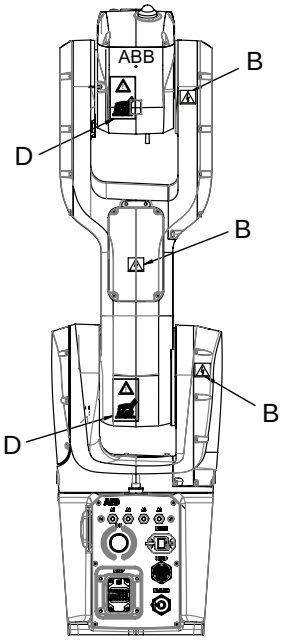

IRB 1200-0.5/9

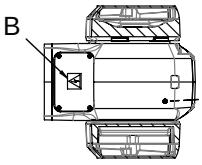

SECTION A-A

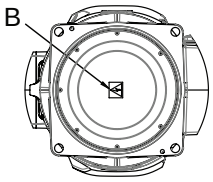

VIEW B

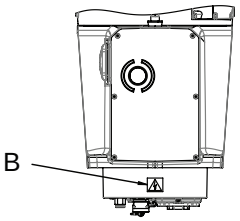

IRB 1200 Option

	Description	Illustration
A	Calibration label	
B	Warning label **Flash**	 xx1300001091

Continues on next page

© Copyright 2014 - 2017 ABB. All rights reserved.

3.3.2 Inspecting the information labels

Continued

C	Instruction label **Lifting of robot**	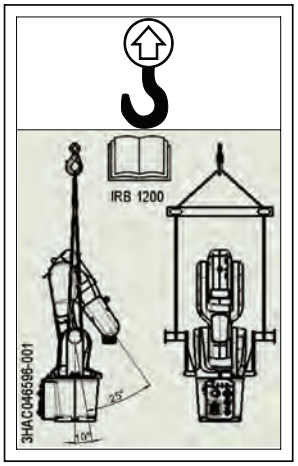 xx1400000518
D	Warning label **Heat**	 xx1300001087
E	Instruction label **Brake release** **Moving robot** **Brake release buttons**	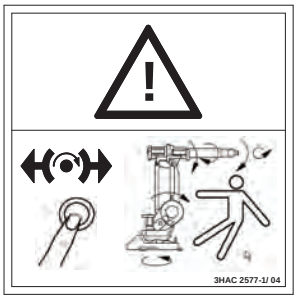 xx1400000519
F	UL label	
G	Rating label	

Continues on next page

© Copyright 2014 - 2017 ABB. All rights reserved.

H	Warning label **Tip risk when loosening bolts**	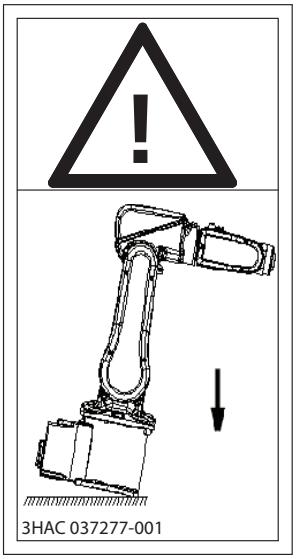 xx1400000527
J	Clean Room label	 xx1600001074
	Foundry Plus label	 xx1600001075

Continues on next page

© Copyright 2014 - 2017 ABB. All rights reserved.

3.3.2 Inspecting the information labels
Continued

K	Type A label	 xx1600002136
	Type B label	 xx1600002137

Required spare parts

Note

The spare part numbers that are listed in the table can be out of date. See the latest revision of *Product manual, spare parts - IRB 1200* on ABB Library.

Spare part	Article number	Note
Labels and plate set	3HAC051417-001	Includes all safety and information labels required for the robot. Missing, damaged or illegable labels must be replaced.

Required tools and equipment

Visual inspection, no tools are required.

Inspecting, labels

	Action	Note
1	**DANGER** Turn off all: • electric power supply • hydraulic pressure supply • air pressure supply to the robot, before entering the robot working area.	
2	Inspect the labels, located as shown in the figures.	
3	Replace any missing or damaged labels.	Article numbers for the labels and plate set is specified in *Spare parts on page 813*.

© Copyright 2014 - 2017 ABB. All rights reserved.

3.3.3 Inspecting mechanical stops

Location of mechanical stops

The mechanical stops on axes 1, 2 and 3 are located as shown in the figures.

Axis 1

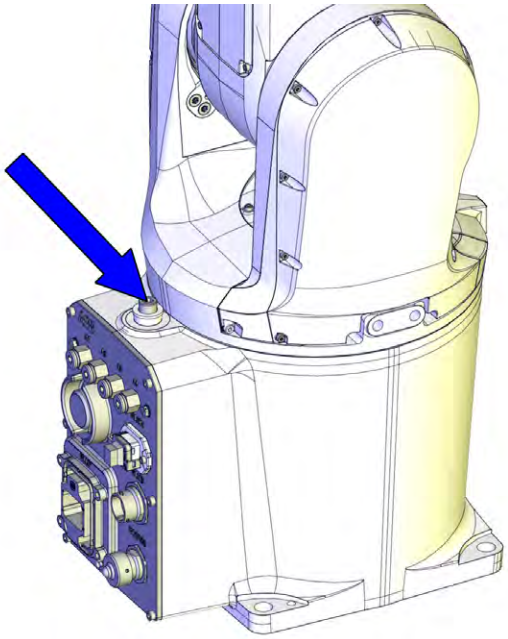

xx1400000391

Axis 2

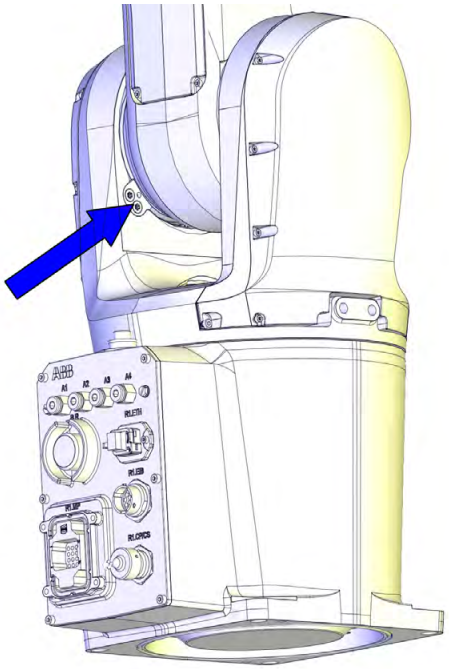

xx1400000389

Continues on next page

© Copyright 2014 - 2017 ABB. All rights reserved.

3.3.3 Inspecting mechanical stops
Continued

Axis 3

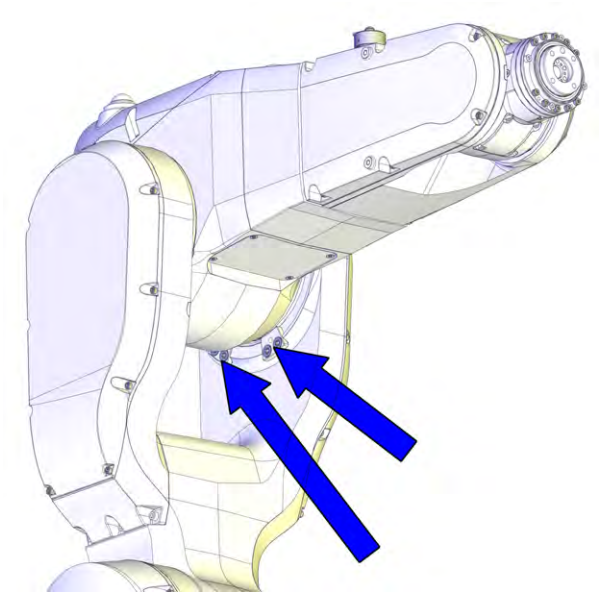

xx1400000386

Required spare parts

Note

The spare part numbers that are listed in the table can be out of date. See the latest revision of *Product manual, spare parts - IRB 1200* on ABB Library.

Spare part	Article number	Note
Mechanical stop set, axis 1	3HAC049630-001	Includes mechanical stop pin (1 pc), washer and screw.
Mechanical stop set, axis 2	3HAC049637-001	Includes mechanical stop pin (1 pc) and screws.
Mechanical stop set, axis 3	3HAC049644-001	Includes mechanical stop pin (1 pc) and screws.

Required tools and equipment

Visual inspection, no tools are required.

Other tools and procedures may be required if the spare part needs to be replaced. These are specified in the replacement procedure.

Continues on next page

© Copyright 2014 - 2017 ABB. All rights reserved.

Inspecting mechanical stops

Use this procedure to inspect mechanical stops on axes 1, 2 and 3.

	Action	Information
1	**DANGER** Turn off all: • electric power supply • hydraulic pressure supply • air pressure supply to the robot, before entering the robot working area.	
2	Inspect the *mechanical stops*.	See the figures in: • *Location of mechanical stops on page 115*
3	Replace if the mechanical stop is: • bent • loose • damaged. **Note** The expected life of gearboxes can be reduced as a result of collisions with the mechanical stop.	

© Copyright 2014 - 2017 ABB. All rights reserved.

3.3.4 Inspecting timing belts

Introduction

CAUTION

Always read the section "General procedures" befor doing any repair work.

Replacing parts on the robot on page 138

Location of timing belts

The timing belts are located as shown in the figures.

Axis 4

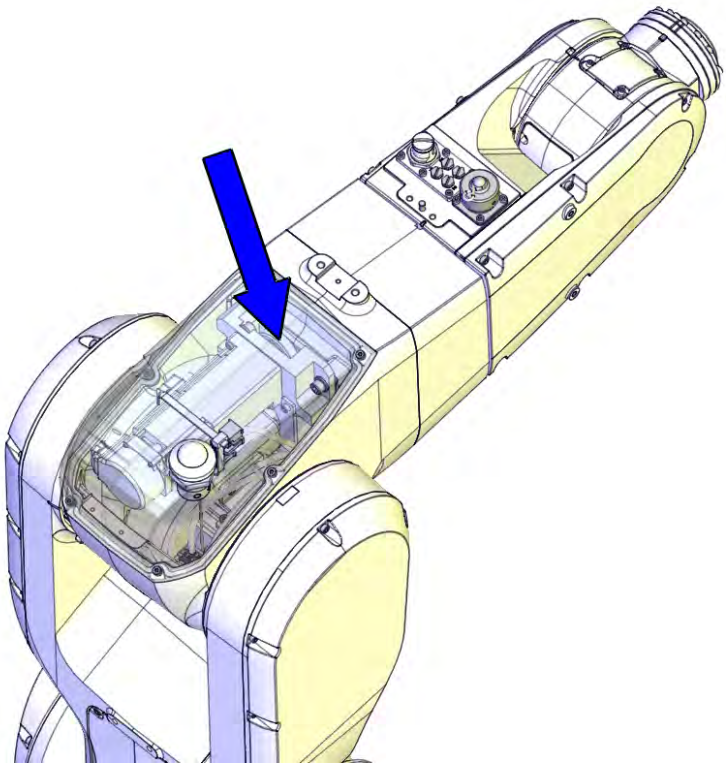

xx1400000036

Continues on next page

© Copyright 2014 - 2017 ABB. All rights reserved.

Axis 5

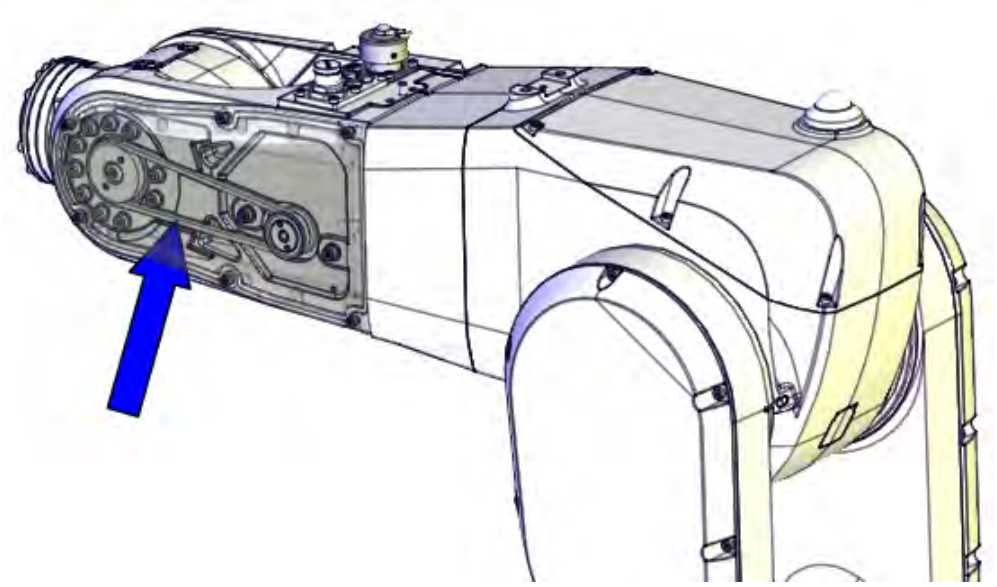

xx1400000032

Required tools and equipment

Equipment	Note
Standard toolkit	The content is defined in the section *Standard toolkit on page 808*.
Other tools and procedures may be required if the spare part needs to be replaced. These are specified in the replacement procedure.	

Timing belt tension

The table describes the timing belt tension.

Axis	Timing belt tension
Axis 4	F = 30 N
Axis 5	F = 26 N

Inspecting timing belts

Use this procedure to inspect timing belts.

	Action	Information
1	**DANGER** Turn off all: • electric power supply • hydraulic pressure supply • air pressure supply to the robot, before entering the robot working area.	

Continues on next page

© Copyright 2014 - 2017 ABB. All rights reserved.

3.3.4 Inspecting timing belts

Continued

	Action	Information
2	Gain access to each *timing belt* by removing the cover.	
3	Check the timing belts for damage or wear.	
4	Check the *timing belt pulleys* for damage.	
5	If any damage or wear is detected, the part must be replaced!	
6	Check each belt for tension. If the belt tension is not correct, adjust it!	Axis 4: F = 30 N. Axis 5: F = 26 N.

© Copyright 2014 - 2017 ABB. All rights reserved.

3.3.5 Inspecting the signal lamp (option)

Location of signal lamp

The signal lamp is located as shown in this figure.

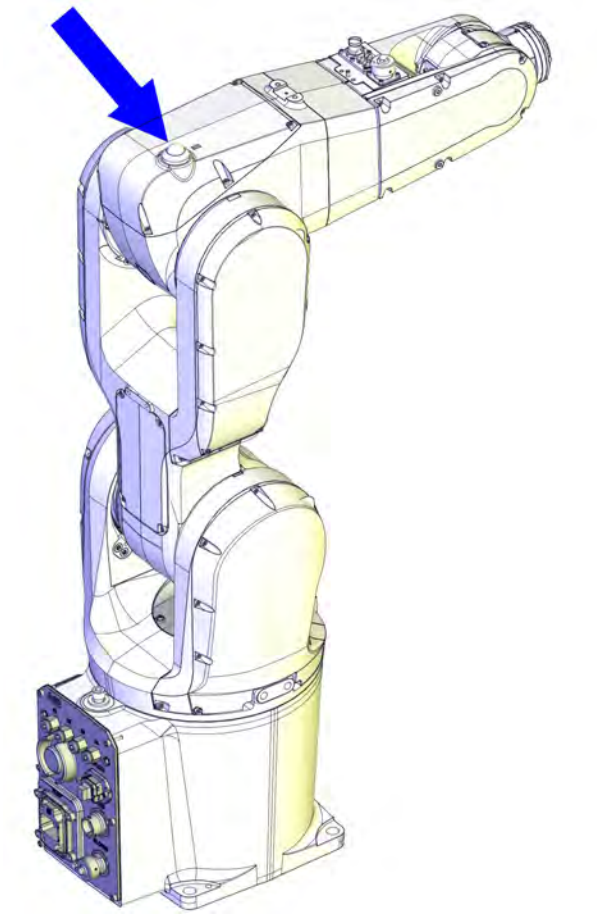

xx1300000455

Required tools and equipment

Equipment	Article number	Note
Signal lamp kit	See *Spare parts on page 813*.	To be replaced if damage is detected.
Standard toolkit	-	Content is defined in section *Standard toolkit on page 808*.

Inspecting, signal lamp

Use this procedure to inspect the function of the signal lamp.

	Action	Note
1	Inspect that signal lamp is lit when motors are put in operation ("MOTORS ON").	

Continues on next page

© Copyright 2014 - 2017 ABB. All rights reserved.

3.3.5 Inspecting the signal lamp (option)

Continued

	Action	Note
2	 **DANGER** Turn off all: • electric power supply • hydraulic pressure supply • air pressure supply to the robot, before entering the robot working area.	
3	If the lamp is not lit, trace the fault by: • inspecting whether the signal lamp is broken. If so, replace it. • inspecting cable connections. • inspecting the cabling. Replace the cabling if a fault is detected.	Article number is specified in *Required tools and equipment on page 121*.

© Copyright 2014 - 2017 ABB. All rights reserved.

3.4 Replacement/changing activities

3.4.1 Replacing the battery pack

Note

The battery low alert (38213 **Battery charge low**) is displayed when remaining backup capacity (robot powered off) is less than 2 months. Typical life of a new battery is 36 months if the robot is powered off 2 days/week, or 18 months if the robot is powered off 16 hours/day. The life can be extended (approximately 3 times) for longer production breaks by a battery shutdown service routine. See *Operating manual - IRC5 with FlexPendant*.

Location of battery pack

The battery pack is located as shown in the figure.

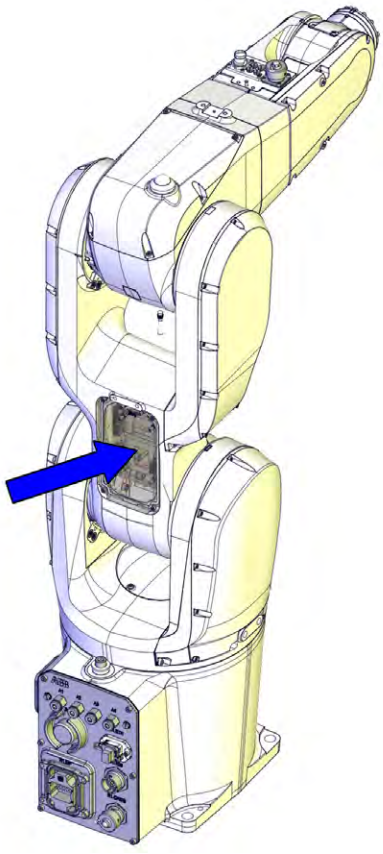

xx1300002574

Required spare parts

Note

The spare part numbers that are listed in the table can be out of date. See the latest revision of *Product manual, spare parts - IRB 1200* on ABB Library.

Continues on next page

© Copyright 2014 - 2017 ABB. All rights reserved.

3.4.1 Replacing the battery pack

Continued

Spare part	Article number	Note
Battery pack	3HAC051036-001	Battery includes protection circuits. Only replace with a specified spare part or an ABB-approved equivalent.
Battery pack, SafeMove 2-supported	3HAC044075-001	Used for IRB 1200 Type B. See *Type B of IRB 1200 on page 792*. Battery includes protection circuits. Only replace with a specified spare part or an ABB-approved equivalent.
Gasket on EIB/SMB cover	3HAC056728-001	Not used with protection class IP40. Replace if damaged.

Required tools and equipment

Equipment, etc.	Article number	Note
24 VDC power supply	-	Used to release the motor brakes.
Standard toolkit	-	Content is defined in section *Standard toolkit on page 808*.

Required consumables

Consumable	Article number	Note
Cable straps	-	

Removing the battery pack

Use this procedure to remove the battery pack.

Preparations before removing the battery pack

	Action	Note
1	Move the robot to its zero position.	This is done in order to facilitate updating of the revolution counter.
2	**DANGER** Turn off all: • electric power supply • hydraulic pressure supply • air pressure supply to the robot, before entering the robot working area.	

Continues on next page

© Copyright 2014 - 2017 ABB. All rights reserved.

Removing the battery pack

	Action	Note
1	**DANGER** Make sure that all supplies for electrical power, hydraulic pressure, and air pressure are turned off.	
2	**ELECTROSTATIC DISCHARGE (ESD)** The unit is sensitive to ESD. Before handling the unit please read the safety information in the section *WARNING - The unit is sensitive to ESD! on page 50*	
3	**CAUTION** For robots with protection type Clean Room: Always cut the paint with a knife and grind the paint edge when disassembling parts of the robot! See *Replacing parts on the robot on page 138*	
4	Remove the connector cover attachment screws on the lower arm and carefully open the cover. **CAUTION** Be aware of the cabling that is attached to the cover!	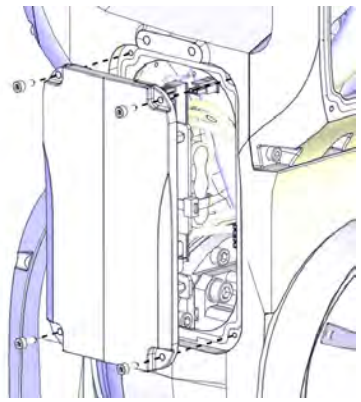 xx1300002427
5	**Valid for IRB 1200 (no type specified) and IRB 1200 Type A** Disconnect the connectors on the EIB unit. • R1.ME1-3 • R1.ME4-6 • R2.EIB	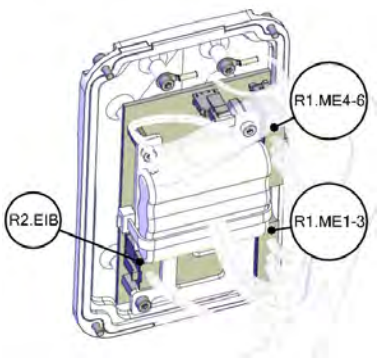 xx1400000812

Continues on next page

© Copyright 2014 - 2017 ABB. All rights reserved.

3.4.1 Replacing the battery pack

Continued

	Action	Note
6	**Valid for IRB 1200 Type B** Loose the connector screws.	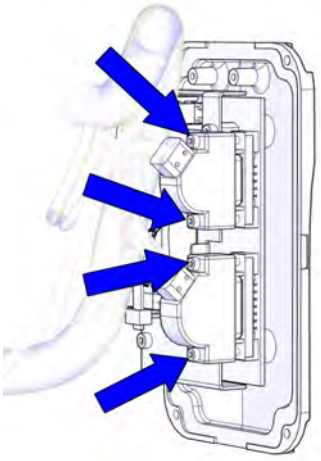 xx1700000004
7	**Valid for IRB 1200 Type B** Disconnect the connectors on the SMB unit. • R1.ME1,2,4,5 • R1.ME3,6 • R2.SMB	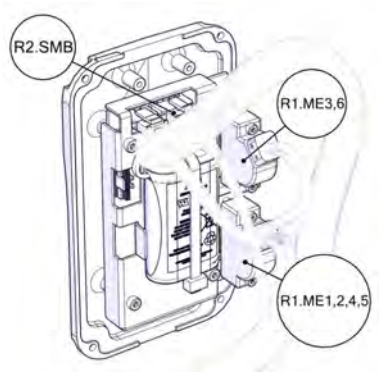 xx1700000005

Continues on next page

© Copyright 2014 - 2017 ABB. All rights reserved.

	Action	Note
8	Disconnect the battery cable.	**Valid for IRB 1200 (no type specified) and IRB 1200 Type A** 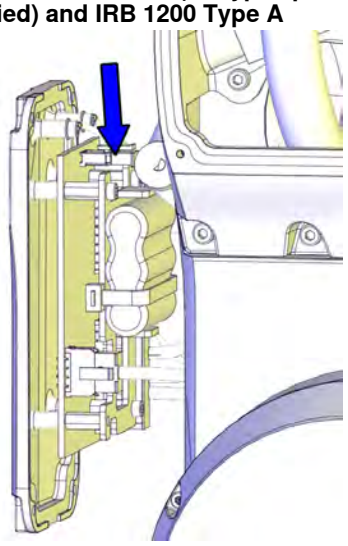 xx1300002571 **Valid for IRB 1200 Type B** 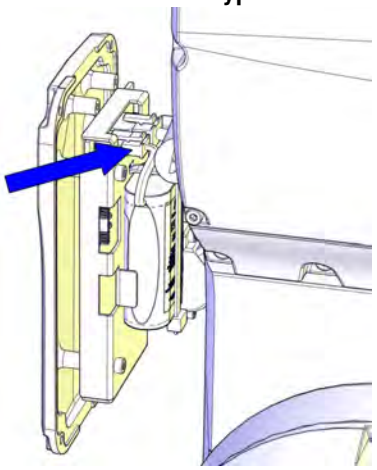 xx1700000006

Continues on next page

© Copyright 2014 - 2017 ABB. All rights reserved.

3.4.1 Replacing the battery pack

Continued

	Action	Note
9	Cut the cable strap that secures the battery and remove the battery. **Note** Battery includes protection circuits. Only replace with a specified spare part or with an ABB- approved equivalent.	**Valid for IRB 1200 (no type specified) and IRB 1200 Type A** 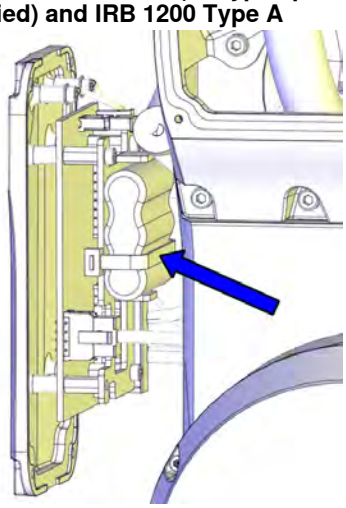 xx1300002579 **Valid for IRB 1200 Type B** 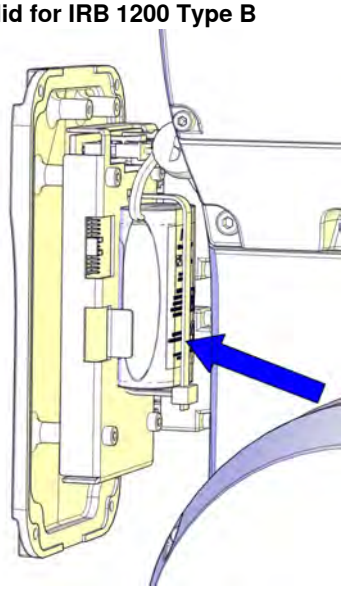 xx1700000007

Refitting the battery pack

Use these procedures to refit the battery pack.

Refitting the battery pack

	Action	Note
1	**ELECTROSTATIC DISCHARGE (ESD)** The unit is sensitive to ESD. Before handling the unit please read the safety information in the section *WARNING - The unit is sensitive to ESD! on page 50*	

Continues on next page

© Copyright 2014 - 2017 ABB. All rights reserved.

	Action	Note
2	Clean Room robots: clean the joints that have been opened. See *Replacing parts on the robot on page 138*	
3	Fit the battery and and secure it with a cable strap. **Note** Battery includes protection circuits. Only replace with a specified spare part or with an ABB- approved equivalent.	**Valid for IRB 1200 (no type specified) and IRB 1200 Type A** 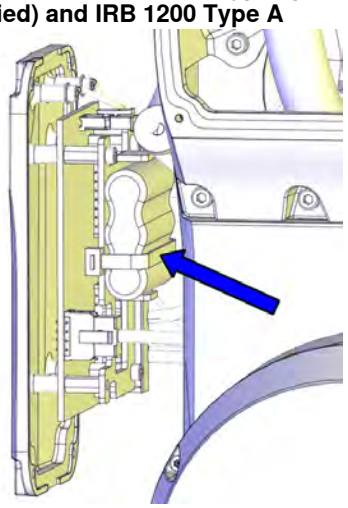 xx1300002579 **Valid for IRB 1200 Type B** 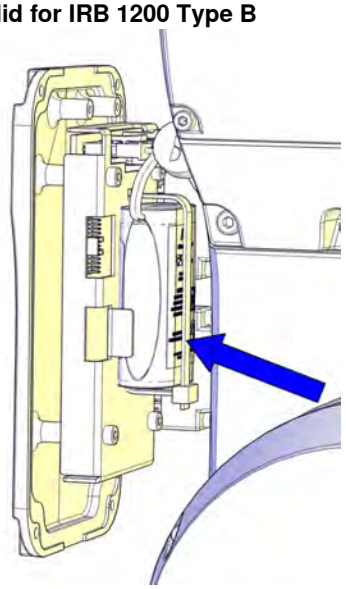 xx1700000007

Continues on next page

© Copyright 2014 - 2017 ABB. All rights reserved.

3.4.1 Replacing the battery pack

Continued

	Action	Note
4	Connect the battery cable.	**Valid for IRB 1200 (no type specified) and IRB 1200 Type A** 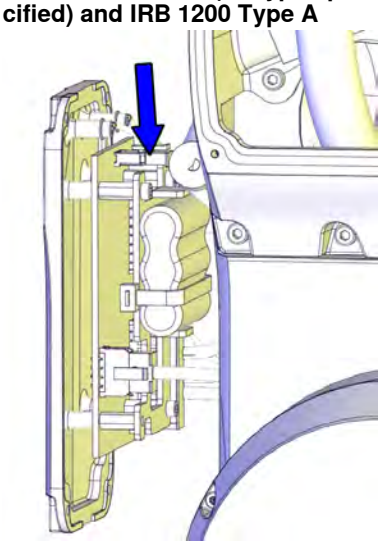 xx1300002571 **Valid for IRB 1200 Type B** 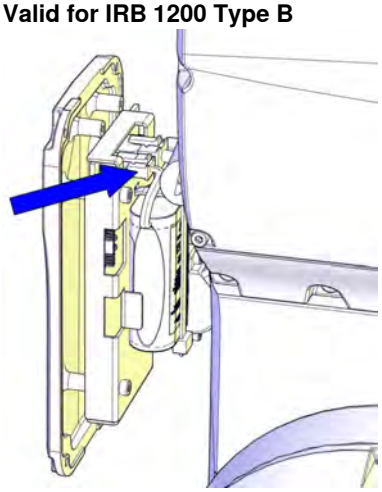 xx1700000006
5	**Valid for IRB 1200 (not type specified) and IRB 1200 Type A** Connect the connectors to the EIB unit. • R1.ME1-3 • R1.ME4-6 • R2.EIB **WARNING** Make sure not to mix the R2.EIB and R2.ME2. Axis 2 may be severely damaged. See the labels on the connectors for correct connection.	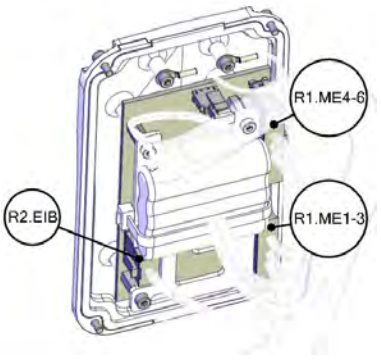 xx1400000812

Continues on next page

© Copyright 2014 - 2017 ABB. All rights reserved.

	Action	Note
6	**Valid for IRB 1200 Type B** Connect the connectors to the SMB unit. • R1.ME1,2,4,5 • R1.ME3,6 • R2.SMB **WARNING** Make sure not to mix the R2.SMB and R2.ME2. Axis 2 may be severely damaged. See the labels on the connectors for correct connection.	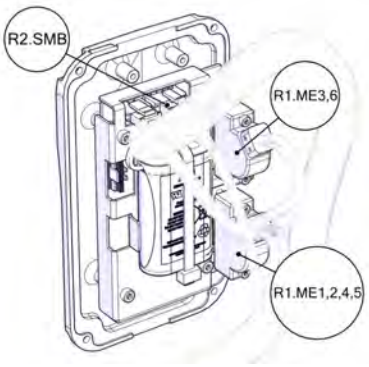 xx1700000005
7	**Valid for IRB 1200 Type B** Tighten the connector screws.	Tightening torque: 0.3 Nm 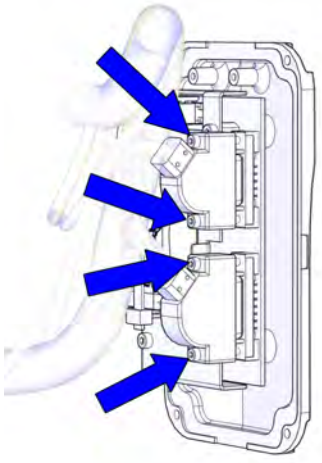 xx1700000004
8	Refit the EIB/SMB cover to the lower arm with the attachment screws.	Screws: 3HAB3409-207 (M3x8). Tightening torque: 1.5 Nm 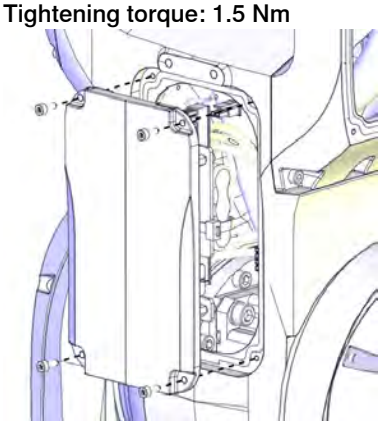 xx1300002427 **Note** Only use specified screws, never replace them with other screws.

Continues on next page

© Copyright 2014 - 2017 ABB. All rights reserved.

3.4.1 Replacing the battery pack

Continued

	Action	Note
9	Clean Room robots: seal and paint the joints that have been opened. See *Replacing parts on the robot on page 138* **Note** After all repair work, wipe the robot free from particles with spirit on a lint free cloth.	

Concluding procedure

	Action	Note
1	Update the revolution counters.	See *Updating revolution counters on page 739*.
2	For robots with protection type Clean Room: Clean and paint the joints that have been opened. See *Replacing parts on the robot on page 138* **Note** After all repair work, wipe the Clean Room robot free from particles with spirit on a lint free cloth.	
3	**DANGER** Make sure all safety requirements are met when performing the first test run. These are further detailed in the section *DANGER - First test run may cause injury or damage! on page 48*.	

© Copyright 2014 - 2017 ABB. All rights reserved.

3.5 Cleaning activities

3.5.1 Cleaning the IRB 1200

WARNING

Turn off all electrical power supplies to the manipulator before entering its work space.

General

To secure high uptime it is important that the IRB 1200 is cleaned regularly. The frequency of cleaning depends on the environment in which the manipulator works.

Different cleaning methods are allowed depending on the type of protection of the IRB 1200.

Note

Always verify the protection type of the robot before cleaning.

Dos and don'ts!

This section specifies some special considerations when cleaning the robot.

Always!

- Always use cleaning equipment as specified! Any other cleaning equipment may shorten the life of the robot.
- Always check that all protective covers are fitted to the robot before cleaning!

Never!

- Never point the water jet at connectors, joints, sealings, or gaskets!
- Never use compressed air to clean the robot!
- Never use solvents that are not approved by ABB to clean the robot!
- Never spray from a distance closer than 0.4 meters!
- Never remove any covers or other protective devices before cleaning the robot!

Cleaning methods

These following table defines what cleaning methods are allowed for ABB manipulators depending on the protection type.

Protection type	Cleaning method			
	Vacuum cleaner	Wipe with cloth	Rinse with water	High pressure water or steam
Standard IP40	Yes	Yes. With light cleaning detergent.	No	No

Continues on next page

© Copyright 2014 - 2017 ABB. All rights reserved.

3.5.1 Cleaning the IRB 1200
Continued

Protection type	Cleaning method			
	Vacuum cleaner	Wipe with cloth	Rinse with water	High pressure water or steam
IP67 (option)	Yes	Yes. With light cleaning detergent.	Yes. It is highly recommended that the water contains a rust-prevention solution and that the manipulator is dried afterwards.	No
Foundry Plus	Yes	Yes. With light cleaning detergent or spirit.	Yes. It is highly recommended that the water contains a rust-prevention solution.	Yes[i]. It is highly recommended that the water and steam contains rust preventive, without cleaning detergents.
Clean room	Yes	Yes. With light cleaning detergent, spirit or isopropyl alcohol.	No	No

i Perform according to section *Cleaning with water and steam on page 134*.

Wiping with cloth

Additional cleaning instructions for robots with food grade lubrication

Make sure that no liquid flows into the robot or stagnates in any gap or surface after cleaning.

Cleaning with water and steam

Instructions for rinsing with water

IRB 1200 with protection class IP67 (option) and with protection type *Foundry Plus* can be cleaned by rinsing with water (water cleaner).[1]

The following list defines the prerequisites:

- Maximum water pressure at the nozzle: 700 kN/m^2 (7 bar) [I]
- Fan jet nozzle should be used, min. 45° spread
- Minimum distance from nozzle to encapsulation: 0.4 meters
- Maximum flow: 20 liters/min[I]

I Typical tap water pressure and flow

Instructions for steam or high pressure water cleaning

ABB robots with protection types *Foundry Plus*, *Wash*, or *Foundry Prime* can be cleaned using a steam cleaner or high pressure water cleaner.[2]

The following list defines the prerequisites:

- Maximum water pressure at the nozzle: 2500 kN/m^2 (25 bar)
- Fan jet nozzle should be used, min. 45° spread

1 See *Cleaning methods on page 133* for exceptions.

2 See *Cleaning methods on page 133* for exceptions.

Continues on next page

© Copyright 2014 - 2017 ABB. All rights reserved.

- Minimum distance from nozzle to encapsulation: 0.4 meters
- Maximum water temperature: 80° C

Cables

Movable cables need to be able to move freely:

- Remove waste material, such as sand, dust and chips, if it prevents cable movement.
- Clean the cables if they have a crusty surface, for example from dry release agents.

© Copyright 2014 - 2017 ABB. All rights reserved.

This page is intentionally left blank

4 Repair

4.1 Introduction

Structure of this chapter

This chapter describes all repair activities recommended for the IRB 1200 and any external unit.

It is made up of separate procedures, each describing a specific repair activity. Each procedure contains all the information required to perform the activity, for example spare parts numbers, required special tools, and materials.

> **WARNING**
>
> Repair activities not described in this chapter must only be carried out by ABB. Otherwise damage to the mechanics and electronics may occur.

Required equipment

The details of the equipment required to perform a specific repair activity are listed in the respective procedures.

The details of equipment are also available in different lists in the chapter *Reference information on page 801*.

Safety information

There are general safety information and specific safety information. The specific safety information describes the danger and safety risks while performing specific steps in a procedure. Make sure to read through the chapter *Safety on page 17* before commencing any service work.

> **Note**
>
> If the IRB 1200 is connected to power, always make sure that the IRB 1200 is connected to earth before starting any repair work.
>
> For more information see:
>
> - *Product manual - IRC5*
> - *Product manual - IRC5 Compact*

© Copyright 2014 - 2017 ABB. All rights reserved.

4.2 General procedures

4.2.1 Replacing parts on the robot

General

Follow the procedures in this section whenever breaking the surface paint of the robot during replacement of parts.

When replacing parts on a robot with protection type Clean Room, it is important to make sure that after the replacement, no particles will be emitted from the joint between the structure and the new part, and that the easy cleaned surface is retained.

Required equipment

Equipment	Spare parts	Note
Sealing compound		Sikaflex 521 FC. Color white.
Tooling pin		Width 6-9 mm, made of wood.
Cleaning agent		Ethanol
Knife		
Lint free cloth		
Touch up paint Clean Room, White	3HAC036639-001	

Removing

	Action	Description
1	Cut the paint with a knife in the joint between the part that will be removed and the structure, to avoid that the paint cracks.	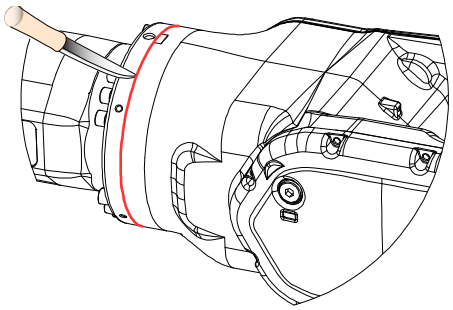 xx0900000121
2	Carefully grind the paint edge that is left on the structure to a smooth surface.	

Refitting

Note

Refitting is required only for robots with protection type Clean Room.

Continues on next page

© Copyright 2014 - 2017 ABB. All rights reserved.

	Action	Description
1	Before the parts are refitted, clean the joint so that it is free from oil and grease.	Use ethanol on a lint free cloth.
2	Place the tooling pin in hot water.	
3	Seal all refitted joints with Sikaflex 521FC.	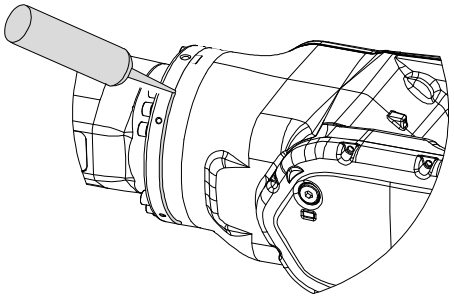 xx0900000122
4	Use the tooling pin to even out the surface of the Sikaflex seal.	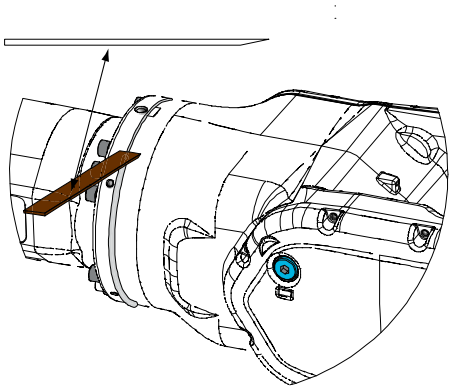 xx0900000125
5	Wait 15 minutes.	Sikaflex 521FC skin dry time (15 minutes).
6	**Note** Always read the instruction in the product data sheet in the paint repair kit for Foundry Prime.	3HAC035355-001
7	Use Touch up paint Clean Room, white to paint the joint. **Note** Always read the instruction in the product data sheet in the paint repair kit for Clean Room.	3HAC036639-001

Note

After all repair work, wipe the robot free from particles with spirit on a lint free cloth.

© Copyright 2014 - 2017 ABB. All rights reserved.

4.2.2 Mounting instructions for seals

General

This section describes how to mount different types of seals onto the robot.

Equipment

Equipment, etc.	Article number	Note
Grease	3HAB3537-1	Used to lubricate the seals.
Grease	3HAC043771-001	Used to lubricate the seals of robots with food grade lubrication.

Rotating seals

The procedure below describes how to fit rotating seals.

CAUTION

Please observe the following before commencing any assembly of seals:

- Protect the sealing surfaces during transport and mounting.
- Keep the seal in its original wrappings or protect it well before actual mounting.
- The fitting of seals and gears must be carried out on clean workbenches.
- Use a protective sleeve for the sealing lip during mounting, when sliding over threads, keyways, etc.

	Action	Note
1	Check the seal to ensure that: • The seal is of the correct type (provided with cutting edge). • There is no damage to the sealing edge (feel with a fingernail).	
2	Inspect the sealing surface before mounting. If scratches or damage are found, the seal must be replaced since it may result in future leakage.	
3	Lubricate the seal with grease just before fitting. (Not too early - there is a risk of dirt and foreign particles adhering to the seal.) Fill 2/3 of the space between the dust tongue and sealing lip with grease. The rubber coated external diameter must also be greased, unless otherwise specified.	Article number is specified in *Equipment on page 140*.
4	Mount the seal correctly with a mounting tool. Never hammer directly on the seal as this may result in leakage.	
5	Make sure no grease left on the robot surface.	

Continues on next page

© Copyright 2014 - 2017 ABB. All rights reserved.

Flange seals and static seals

The following procedure describes how to fit flange seals and static seals.

	Action
1	Check the flange surfaces. They must be even and free from pores. It is easy to check flatness using a gauge on the fastened joint (without sealing compound). If the flange surfaces are defective, the parts may not be used because leakage could occur.
2	Clean the surfaces properly in accordance with the recommendations of ABB.
3	Distribute the sealing compound evenly over the surface, preferably with a brush.
4	Tighten the screws evenly when fastening the flange joint.

O-rings

The following procedure describes how to fit o-rings.

	Action	Note
1	Ensure that the correct o-ring size is used.	
2	Check the o-ring for surface defects, burrs, shape accuracy, and so on.	Defective o-rings may not be used.
3	Check the o-ring grooves. The grooves must be geometrically correct and should be free of pores and contamination.	Defective o-rings may not be used.
4	Lubricate the o-ring with grease.	
5	Tighten the screws evenly while assembling.	
6	Make sure that no grease is left on the robot surface.	

© Copyright 2014 - 2017 ABB. All rights reserved.

4.2.3 Sealing differences depending on protection class

Standard IP40 vs optional IP67

The IRB 1200 has IP40 as standard protection class. If the robot is delivered with option IP67, many of the covers are equipped with gaskets, several components has been applied with locking liquid etc.

This means that there are differences in the repair procedures depending on the robot protection class. These are clearly stated in the step-by-step procedures.

© Copyright 2014 - 2017 ABB. All rights reserved.

4.2.4 Swing sealing plug for Clean Room robots and robots with food grade lubrication

Location of the swing sealing plug

The swing sealing plug is located as shown in the figure.

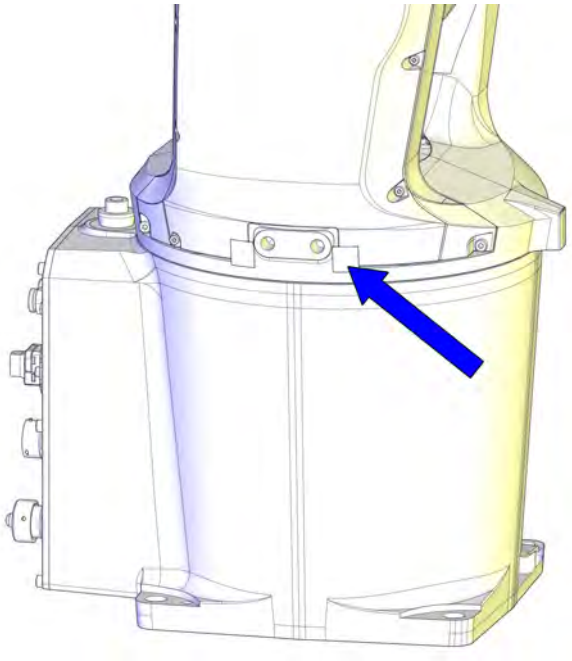

xx1600000264

Required spare parts

Note

The spare part numbers that are listed in the table can be out of date. See the latest revision of *Product manual, spare parts - IRB 1200* on ABB Library.

Spare part	Article number	Note
Swing sealing plug	3HAC053687-001	Used with protection type Clean Room. Used for robots with food grade lubrication. Replace if damaged.

Required tools and equipment

Equipment, etc.	Article number	Note
Standard toolkit	-	Content is defined in section *Standard toolkit on page 808*.

Continues on next page

© Copyright 2014 - 2017 ABB. All rights reserved.

4.2.4 Swing sealing plug for Clean Room robots and robots with food grade lubrication
Continued

Required consumables

Consumable	Art. no.	Note
Sealant	3HAC026759-001	Sikaflex 521FC For robots with protection type Clean Room

Removing the swing sealing plug

	Action	Note
1	Cut the swing sealing plug through with a sharp object to get access to the screws.	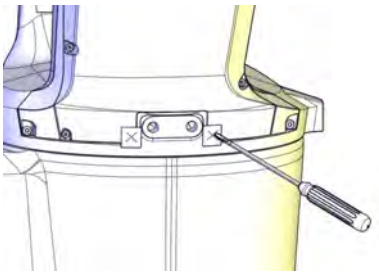 xx1600000206
2	Remove the cable housing cover of the swing by removing the screws.	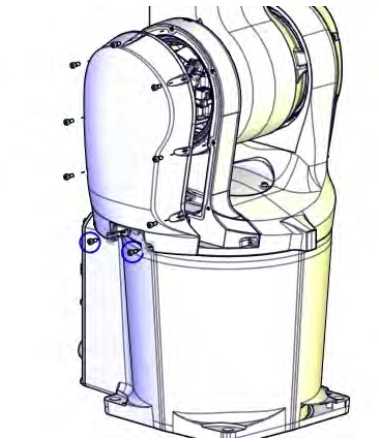 xx1600000207
3	Detach the swing sealing plug from the cable housing cover.	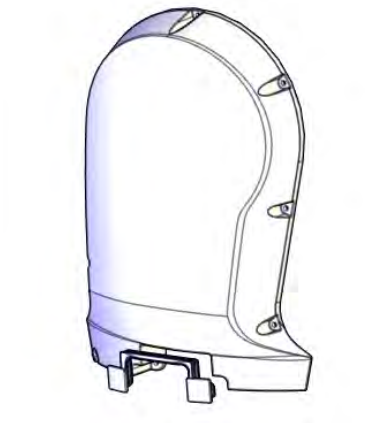 xx1600000208

Continues on next page

© Copyright 2014 - 2017 ABB. All rights reserved.

Refitting the swing sealing plug

	Action	Note
1	Mask the gap between the swing and the base.	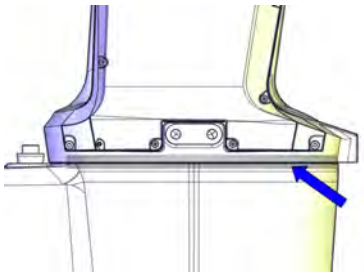 xx1600000209
2	Apply a string of the sealant Sikaflex 521FC to the joint of the swing cable housing cover.	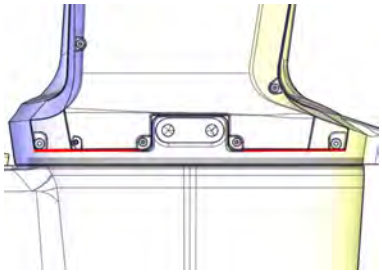 xx1600000210
3	Smooth out the sealant string using a finger tip. Use washing-up on finger tips to get a smooth joint. If necessary, add extra sealant to get a full cover joint. Make sure the sealant fully covers the gap but is not applied to the screw cavities.	
4	Wait at least 30 minutes for Sikaflex 521FC to dry and then remove the mask.	Sikaflex 521FC skin dry time: 30 minutes
5	Apply a little sealant Sikaflex 521FC to the inner surface of the swing sealing plug.	 xx1600000211 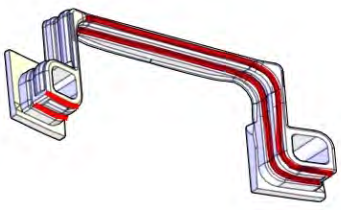 xx1600000261

Continues on next page

© Copyright 2014 - 2017 ABB. All rights reserved.

4.2.4 Swing sealing plug for Clean Room robots and robots with food grade lubrication
Continued

	Action	Note
6	Refit the swing sealing plug.	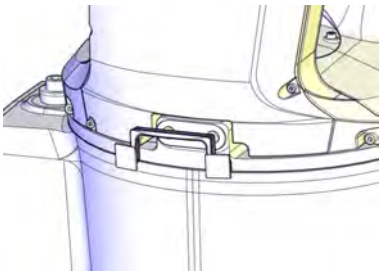 xx1600000212
7	If there is any overflowing sealant, remove and clean it. Make sure no space exists between the swing sealing plug and the robot casting, and the sealant string is fully jointed with the plug.	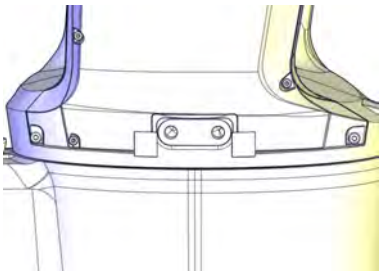 xx1600000213

© Copyright 2014 - 2017 ABB. All rights reserved.

4.3 Cable harness

4.3.1 Replacing the main cable package

Location of the main cable package

The main cable package runs from the base, up through the swing, up through the lower arm and into the housing. Inside the housing there is a division point for the axis-5 and axis-6 motor cables.

The main cable package includes the air hoses and the cabling for all the six motors. Optional Ethernet cabling can also be included.

The air hoses and optional Ethernet must be disconnected inside the wrist unit before the cable package can be removed.

As standard feature, the connector interface is located at the rear of the base. The interface can also be bottom mounted, as an option. This section describes both configurations.

Connector interface at the rear of the base (standard)

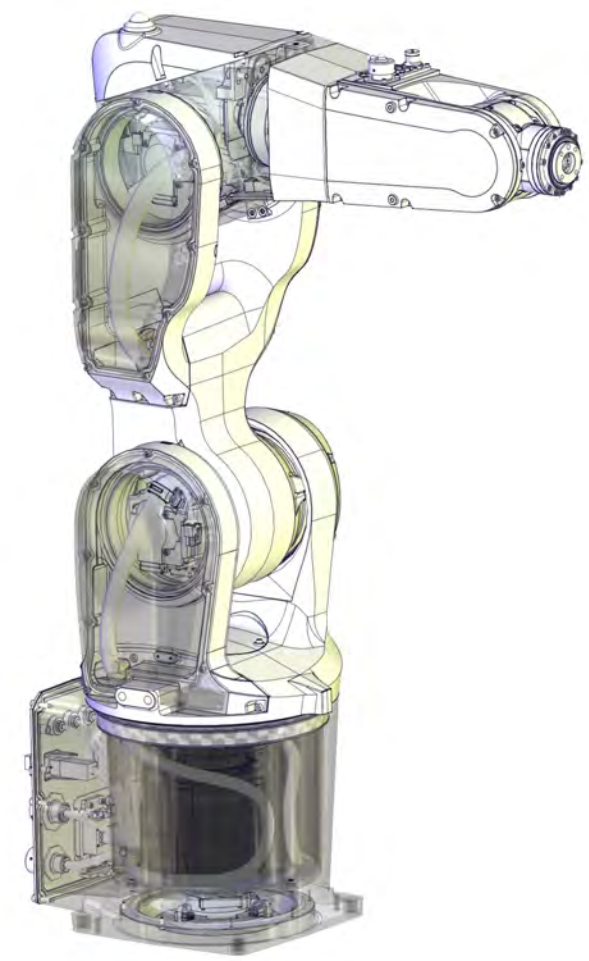

xx1300002414

Continues on next page

© Copyright 2014 - 2017 ABB. All rights reserved.

4.3.1 Replacing the main cable package

Continued

Connector interface at the bottom of the base (option)

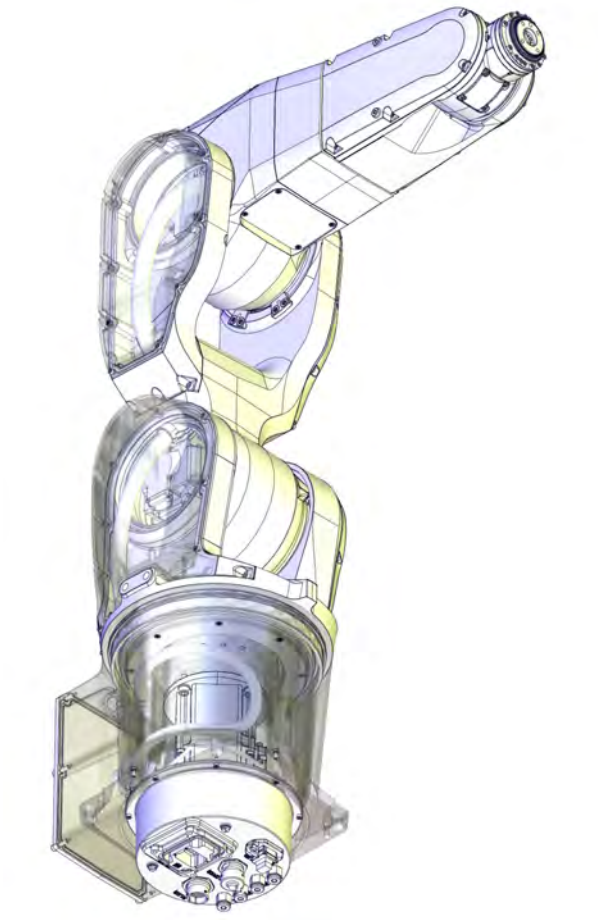

xx1400000410

Required spare parts

Note

The spare part numbers that are listed in the table can be out of date. See the latest revision of *Product manual, spare parts - IRB 1200* on ABB Library.

Spare part	Article number	Note
Manipulator cable harness with Ethernet (rear interface)	3HAC059673-001	With connector interface at rear of the base.
Manipulator cable harness without Ethernet (rear interface)	3HAC059674-001	With connector interface at rear of the base.
Manipulator cable harness with Ethernet (rear interface), Clean Room Manipulator cable harness with Ethernet (rear interface), food grade lubrication	3HAC056219-001	Used with protection type Clean Room. Used for robots with food grade lubrication. With connector interface at rear of the base.

Continues on next page

© Copyright 2014 - 2017 ABB. All rights reserved.

Spare part	Article number	Note
Manipulator cable harness without Ethernet (rear interface), Clean Room Manipulator cable harness without Ethernet (rear interface), food grade lubrication	3HAC056220-001	Used with protection type Clean Room. Used for robots with food grade lubrication. With connector interface at rear of the base.
Manipulator cable harness with Ethernet (bottom interface)	3HAC051415-001	With connector interface at bottom of the base.
Manipulator cable harness without Ethernet (bottom interface)	3HAC051416-001	With connector interface at bottom of the base.
Manipulator cable harness with Ethernet (rear interface), SafeMove 2-supported	3HAC061282-001	Used for IRB 1200 Type B. See *Type B of IRB 1200 on page 792*. With connector interface at rear of the base.
Manipulator cable harness without Ethernet (rear interface), SafeMove 2-supported	3HAC061283-001	Used for IRB 1200 Type B. See *Type B of IRB 1200 on page 792*. With connector interface at rear of the base.
Manipulator cable harness with Ethernet (rear interface), Clean Room and SafeMove 2-supported Manipulator cable harness with Ethernet (rear interface), food grade lubrication and SafeMove 2-supported	3HAC061286-001	Used for IRB 1200 Type B. See *Type B of IRB 1200 on page 792*. Used with protection type Clean Room. Used for robots with food grade lubrication. With connector interface at rear of the base.
Manipulator cable harness without Ethernet (rear interface), Clean Room and SafeMove 2-supported Manipulator cable harness without Ethernet (rear interface), food grade lubrication and SafeMove 2-supported	3HAC061287-001	Used for IRB 1200 Type B. See *Type B of IRB 1200 on page 792*. Used with protection type Clean Room. Used for robots with food grade lubrication. With connector interface at rear of the base.
Manipulator cable harness with Ethernet (bottom interface), SafeMove 2-supported	3HAC061284-001	Used for IRB 1200 Type B. See *Type B of IRB 1200 on page 792*. With connector interface at bottom of the base.
Manipulator cable harness without Ethernet (bottom interface), SafeMove 2-supported	3HAC061285-001	Used for IRB 1200 Type B. See *Type B of IRB 1200 on page 792*. With connector interface at bottom of the base.
Cable harness material set	3HAC049663-001	Includes brackets, sheets, distance screws, plastics, cable clamp, seal bolts and air protection in tubular.
Air connector set with Ethernet hole in flange	3HAC049664-001	Includes tubular flange, air connectors and seal bolts. Replace if damaged.

Continues on next page

© Copyright 2014 - 2017 ABB. All rights reserved.

4.3.1 Replacing the main cable package

Continued

Spare part	Article number	Note
Air connector set without Ethernet hole in flange	3HAC049665-001	Includes tubular flange, air connectors and seal bolts. Replace if damaged.
Base bottom cover (standard configuration)	3HAC049667-001	Replace if damaged.
Base rear cover, without connector interface	3HAC059675-001	Replace if damaged.
Base rear cover, without connector interface, Clean Room Base rear cover, without connector interface, food grade lubrication	3HAC056147-001	Used with protection type Clean Room. Used for robots with food grade lubrication. Replace if damaged.
Gasket for rear base cover	3HAC058566-001	Not used with protection class IP40. Replace if damaged.
O-ring	3HAB3772-86	Not used with protection class IP40. Replace if damaged.
Radial sealing with dust lip	3HAB3701-47	Not used with protection class IP40. Replace if damaged.
M2 variseal sealing	3HAC044641-002	Used with protection class IP67. Used only on base 3HAC049628-001. See *Spare part versions for the base on IP40/IP67 robots on page 793*. Replace if damaged.
Axis-1 sealing ring	3HAC044676-001 / 3HAC058568-001 i	Replace if damaged.
V-ring	3HAB3732-34	Used with protection class IP67. Used with protection type Foundry Plus. Only on swing version 3HAC058000-001 and 3HAC059554-001. See *Spare part versions for the swing on IP40/IP67 robots on page 795*. Replace if damaged.
Axis-2 sealing ring	3HAC044677-001	Replace if damaged.
Gasket of axis-2 sealing ring	3HAC045688-001	Not used with protection class IP40. Replace if damaged.
Radial sealing with dust lip	3HAB3701-41	Not used with protection class IP40. Replace if damaged.
Gasket of plastic plate	3HAC044894-001	Not used with protection class IP40. Replace if damaged.
Cable protection	3HAC044691-001	Replace if damaged.

Continues on next page

© Copyright 2014 - 2017 ABB. All rights reserved.

Spare part	Article number	Note
Torx countersunk head screw M3x5	3HAC14286-4	Replace if damaged.
Cover on top of swing	3HAC059679-001	Replace if damaged.
Cover on top of swing, Clean Room Cover on top of swing, food grade lubrication	3HAC056133-001	Used with protection type Clean Room. Used for robots with food grade lubrication. Replace if damaged.
Gasket on top swing cover	3HAC056696-001	Not used with protection class IP40. Replace if damaged.
M2 variseal sealing	3HAC044641-004	Used with protection class IP67. Used with protection type Foundry Plus. Replace if damaged.
Cable housing cover of the swing	3HAC059678-001	Replace if damaged.
Cable housing cover of the swing, Clean Room Cable housing cover of the swing, food grade lubrication	3HAC056214-001	Used with protection type Clean Room. Used for robots with food grade lubrication. Replace if damaged.
Gasket on cable housing cover	3HAC056726-001	Not used for robots with protection class IP40. Replace if damaged.
PTFE film on cable housing cover	3HAC044660-001	Replace if damaged.
Gasket on cable housing cover	3HAC056724-001	Not used with protection class IP40. Replace if damaged.
EIB/SMB cover	3HAC059692-001	Replace if damaged.
EIB/SMB cover, Clean Room EIB/SMB cover, food grade lubrication	3HAC056137-001	Used with protection type Clean Room. Used for robots with food grade lubrication. Replace if damaged.
Gasket on EIB/SMB cover	3HAC056728-001	Not used with protection class IP40. Replace if damaged.
Motor bracket	3HAC044689-001	Replace if damaged.
Housing small cover	3HAC059684-001	Replace if damaged.
Housing small cover, Clean Room Housing small cover, food grade lubrication	3HAC056142-001	Used with protection type Clean Room. Used for robots with food grade lubrication. Replace if damaged.

Continues on next page

© Copyright 2014 - 2017 ABB. All rights reserved.

4.3.1 Replacing the main cable package

Continued

Spare part	Article number	Note
Gasket on cable housing cover	3HAC056724-001	Not used with protection class IP40. Replace if damaged.
Gasket for tubular cover	3HAC058822-001	Not used with protection class IP40. Replace if damaged.
Gasket for tubular cable housing cover	3HAC056707-001	Not used with protection class IP40. Replace if damaged.
Housing cover gasket (IRB 1200-7/0.7)	3HAC056698-001	Not used with protection class IP40. Replace if damaged.
Housing cover gasket (IRB 1200-5/0.9)	3HAC056697-001	Not used with protection class IP40. Replace if damaged.

i For information on which sealing ring to be ordered, see *Spare part versions for the axis-1 sealing ring on IP40/IP67 robots on page 797*.

Required tools and equipment

Equipment, etc.	Article number	Note
Roundsling, 2 m	-	Length: 2 m. Lifting capacity: 100 kg.
Guide pin for axis-1 gear unit	3HAC049703-001	Always use three guide pins together!
24 VDC power supply	-	Used to release the motor brakes.
Calibration toolkit, manual calibration	3HAC051256-001	Includes calibration tools, pins and attachment screws for manual calibration method. i
Standard toolkit	-	Content is defined in section *Standard toolkit on page 808*.

i The robot is calibrated by either manual calibration or Axis Calibration at factory. Always use the same calibration method as used at the factory.

Information about valid calibration method is found on the calibration label or in the calibration menu on the FlexPendant.

If no data is found related to standard calibration, manual calibration is used as default.

Required consumables

Equipment	Article number	Note
Cable straps	-	
Grease	3HAB3537-1	Used for lubrication of cable contact areas.
Grease	3HAC029132-001	Used for lubrication of cable contact areas for robots with food grade lubrication.
Locking liquid	3HAB7116-1	Loctite 243
Cleaning agent	-	Loctite 7063

Continues on next page

© Copyright 2014 - 2017 ABB. All rights reserved.

Equipment	Article number	Note
Flange sealing	12340011-116	Loctite 574 For robots with protection class IP67 (option 287-10) For robots with protection type Foundry Plus (option 287-3)
Sealant	3HAC026759-001	Sikaflex 521FC For robots with protection type Clean Room

Deciding calibration routine

Decide which calibration routine to be used, based on the information in the table. Depending on which routine is chosen, action might be required prior to beginning the repair work of the robot, see the table.

	Action	Note
1	Decide which calibration routine to use for calibrating the robot. • Reference calibration. External cable packages (DressPack) and tools can stay fitted on the robot. • Fine calibration. All external cable packages (DressPack) and tools must be removed from the robot.	**Note** Calibrating axis 6 always requires tools to be removed from the mounting flange (also for reference calibration) since the mounting flange is used for installation of the calibration tool.
	If the robot is to be calibrated with reference calibration: Find previous reference values for the axis or create new reference values. These values are to be used after the repair procedure is completed, for calibration of the robot. If no previous reference values exist, and no new reference values can be created, then reference calibration is not possible.	Follow the instructions given in the reference calibration routine on the FlexPendant to create reference values. Creating new values requires possibility to move the robot. Read more about reference calibration for Axis Calibration in *Reference calibration routine on page 743*.
	If the robot is to be calibrated with fine calibration: Remove all external cable packages (DressPack) and tools from the robot.	

Removing the main cable package

Use these procedures to remove the main cable package from the robot.

Preparations before removing the main cable package

	Action	Note
1	Decide which calibration routine to use, and take actions accordingly prior to beginning the repair procedure.	

Continues on next page

© Copyright 2014 - 2017 ABB. All rights reserved.

4.3.1 Replacing the main cable package

Continued

	Action	Note
2	Jog all axes to zero position.	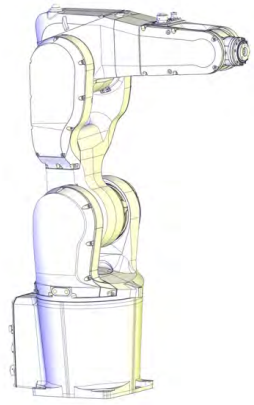 xx1300002581
3	**DANGER** Turn off all: • electric power supply • hydraulic pressure supply • air pressure supply to the robot, before entering the robot working area.	

Getting access to inside of the wrist unit

	Action	Note
1	**DANGER** Make sure that all supplies for electrical power, hydraulic pressure, and air pressure are turned off.	
2	**CAUTION** For robots with protection type Clean Room: Always cut the paint with a knife and grind the paint edge when disassembling parts of the robot! See *Replacing parts on the robot on page 138*	

Continues on next page

© Copyright 2014 - 2017 ABB. All rights reserved.

	Action	Note
3	Remove the covers on each side of the wrist by removing their screws. **Note** **For robots with protection class IP67 (option 287-10)** **For robots with protection type Foundry Plus (option 287-3)** The two front screws on the left hand side cover (encircled in the figure) have been fitted with locking liquid. The tubular cover (left hand side cover) has two extra screws and washers, as encircled in the figure. **Note** **For robots with protection type Clean Room** The tubular cover (left hand side cover) has two extra screws and washers, as encircled in the figure.	For robots with protection class IP67 (option 287-10) For robots with protection type Foundry Plus (option 287-3) 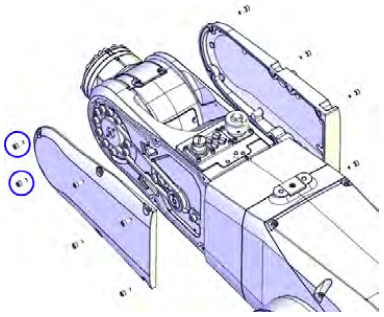 xx1300002349 For robots with protection type Clean Room 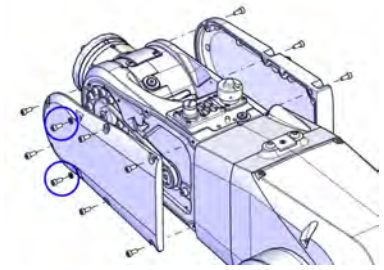 xx1600001148

Disconnecting the axis-5 motor connectors

	Action	Note
1	**DANGER** Make sure that all supplies for electrical power, hydraulic pressure, and air pressure are turned off.	
2	Snap loose the motor connectors from their holders and then disconnect them. • R3.MP5 • R3.ME5 **Tip** Take photos of the connector and cable position before disconnecting them, to have as a reference when reconnecting.	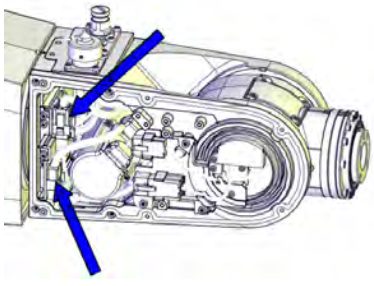 xx1300002360

Continues on next page

© Copyright 2014 - 2017 ABB. All rights reserved.

4.3.1 Replacing the main cable package

Continued

Disconnecting the axis-5 FPC connectors

	Action	Note
1	**DANGER** Make sure that all supplies for electrical power, hydraulic pressure, and air pressure are turned off.	
2	Snap loose and disconnect the axis-5 FPC connectors.	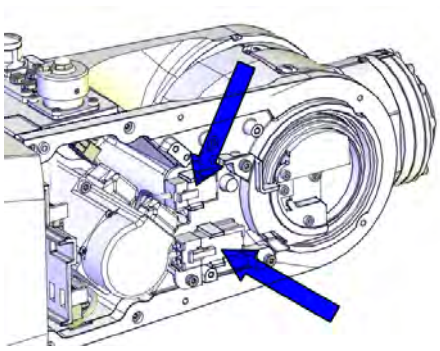 xx1300002390

Disconnecting the air hoses

	Action	Note
1	**DANGER** Make sure that all supplies for electrical power, hydraulic pressure, and air pressure are turned off.	
2	Disconnect the air hoses.	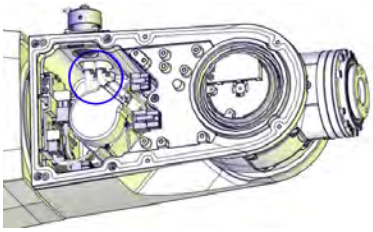 xx1400000738

Disconnecting the axis-4 FPC connectors

	Action	Note
1	**DANGER** Make sure that all supplies for electrical power, hydraulic pressure, and air pressure are turned off.	

Continues on next page

© Copyright 2014 - 2017 ABB. All rights reserved.

	Action	Note
2	**CAUTION** For robots with protection type Clean Room: Always cut the paint with a knife and grind the paint edge when disassembling parts of the robot! See *Replacing parts on the robot on page 138*	
3	Remove the cable housing cover.	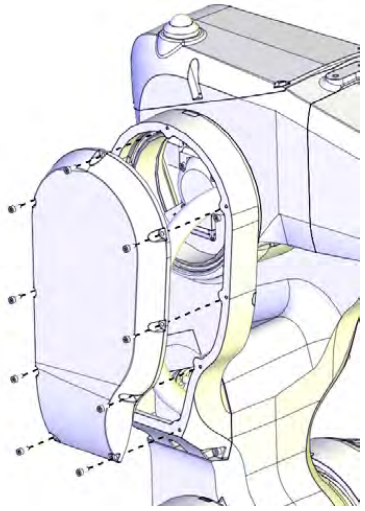 xx1300002400
4	Remove the plate.	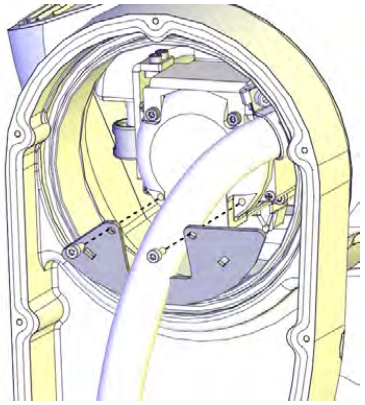 xx1300002413

Continues on next page

© Copyright 2014 - 2017 ABB. All rights reserved.

4.3.1 Replacing the main cable package

Continued

	Action	Note
5	Pull out the FPC connectors from the housing and disconnect them.	Cable layout in IRB 1200-7/0.7 : 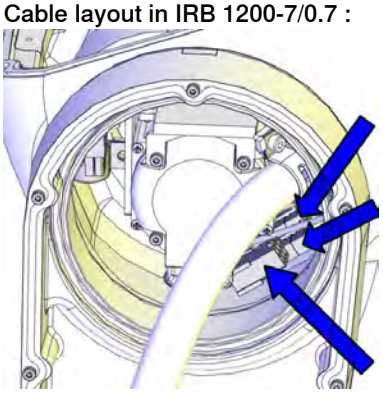 xx1300002412 Cable layout in IRB 1200-5/0.9 : 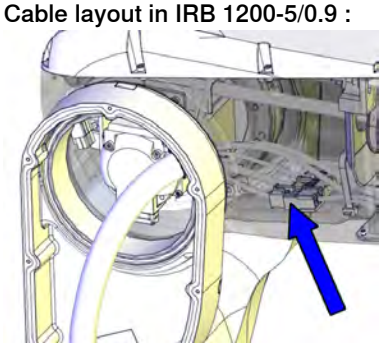 xx1400001471
6	Remove the small cover of the housing.	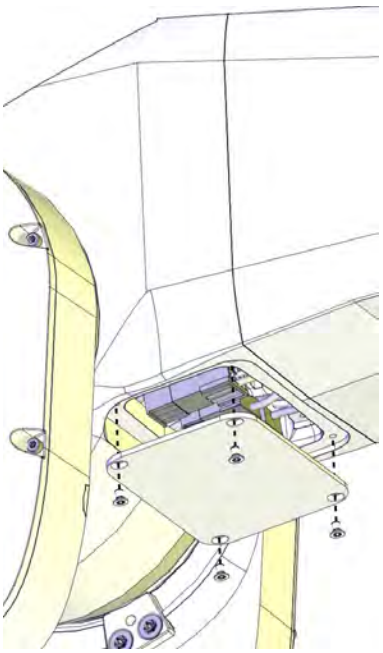 xx1300002398

Continues on next page

© Copyright 2014 - 2017 ABB. All rights reserved.

	Action	Note
7	Disconnect the remaining FPC connectors.	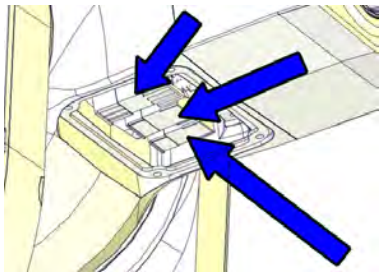 xx1300002399

Disconnecting the axis-4 motor connectors

	Action	Note
1	**DANGER** Make sure that all supplies for electrical power, hydraulic pressure, and air pressure are turned off.	
2	**CAUTION** For robots with protection type Clean Room: Always cut the paint with a knife and grind the paint edge when disassembling parts of the robot! See *Replacing parts on the robot on page 138*	
3	Remove the cover from the upper arm housing. **CAUTION** **For robots with safety lamp (option)** Be aware of the signal lamp cables that are attached inside the housing! Disconnect the lamp cable connectors R3.H1 and R3.H2 and then lift away the cover completely.	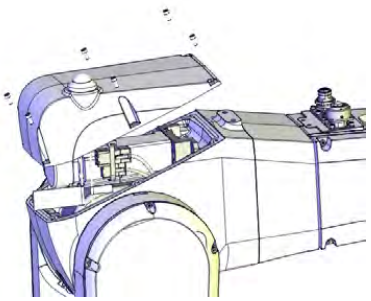 xx1300000456
4	Cut the strap that holds the connectors.	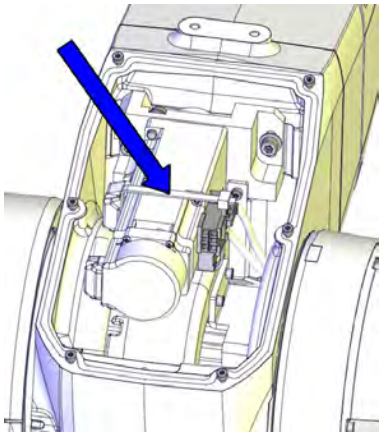 xx1300002494

Continues on next page

© Copyright 2014 - 2017 ABB. All rights reserved.

4.3.1 Replacing the main cable package

Continued

	Action	Note
5	Disconnect the motor connectors. **Tip** Take photos of the connector and cable position before disconnecting them, to have as a reference when reconnecting.	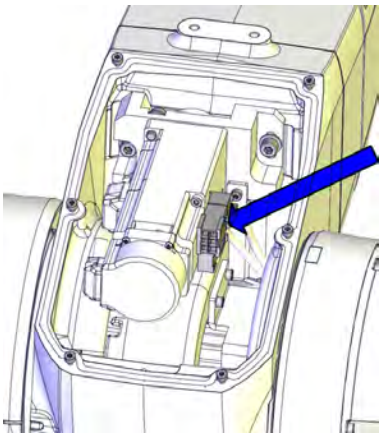 xx1300002495

Disconnecting the axis-3 motor connectors

	Action	Note
1	**DANGER** Make sure that all supplies for electrical power, hydraulic pressure, and air pressure are turned off.	
2	Pull out the axis-3 motor connectors from the housing and disconnect them.	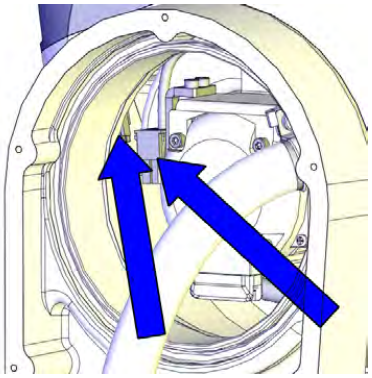 xx1300002420

Removing the cable package in the housing

	Action	Note
1	**DANGER** Make sure that all supplies for electrical power, hydraulic pressure, and air pressure are turned off.	

Continues on next page

© Copyright 2014 - 2017 ABB. All rights reserved.

	Action	Note
2	Remove the screw that fastens the air hose holder.	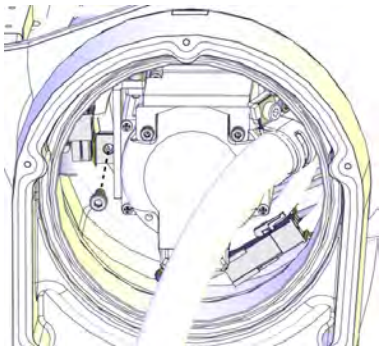 xx1300002422
3	Remove the screws that fasten the fix sheet to the inner plastic guide.	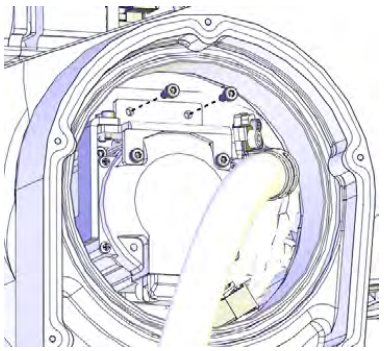 xx1300002421
4	Remove the screws that fasten the fix sheet to the motor.	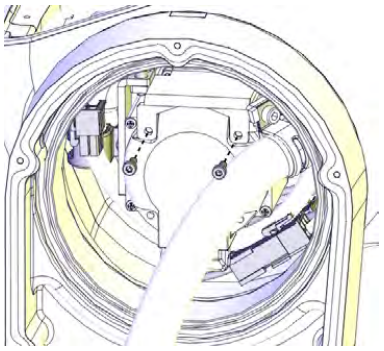 xx1300002423
5	Pull out the fix sheet a bit, to access the screws that fasten the cable bracket to the sheet. Loosen the bracket from the sheet by removing the two screws. **CAUTION** Do not loosen the cable clamp screw! There is a risk of rearrangement of the cable layout which would result in shortened lifetime of the cable harness.	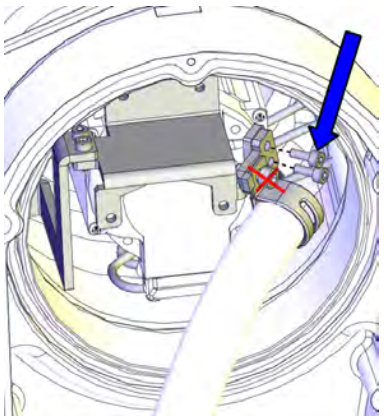 xx1300002424

Continues on next page

© Copyright 2014 - 2017 ABB. All rights reserved.

4.3.1 Replacing the main cable package

Continued

	Action	Note
6	**Valid for IRB 1200-5/0.9** Cut the cable straps at the bottom of the housing.	

Disconnecting the cabling in the lower arm

	Action	Note
1	**DANGER** Make sure that all supplies for electrical power, hydraulic pressure, and air pressure are turned off.	
2	**ELECTROSTATIC DISCHARGE (ESD)** The unit is sensitive to ESD. Before handling the unit please read the safety information in the section *WARNING - The unit is sensitive to ESD! on page 50*	
3	**CAUTION** For robots with protection type Clean Room: Always cut the paint with a knife and grind the paint edge when disassembling parts of the robot! See *Replacing parts on the robot on page 138*	
4	Remove the EIB/SMB cover attachment screws on the lower arm and carefully open the cover. **CAUTION** Be aware of the cabling that is attached to the cover! The cover can not be removed completely until the connectors and lugs are disconnected, as shown in following step.	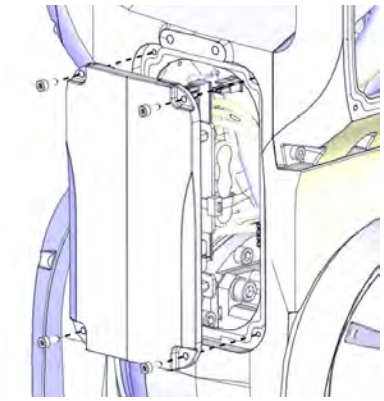 xx1300002427

Continues on next page

© Copyright 2014 - 2017 ABB. All rights reserved.

	Action	Note
5	**Valid for IRB 1200 (no type specified) and IRB 1200 Type A** Disconnect the connectors on the EIB unit. • R1.ME1-3 • R1.ME4-6 • R2.EIB Remove the EIB/SMB cover completely from the lower arm.	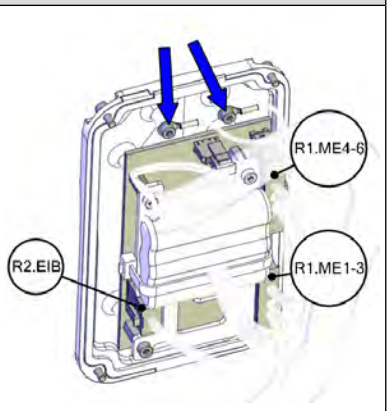 xx1300002428
6	**Valid for IRB 1200 (no type specified) and IRB 1200 Type A** Disconnect the lugs on the EIB/SMB cover.	
7	**Valid for IRB 1200 Type B** Loose the connector screws.	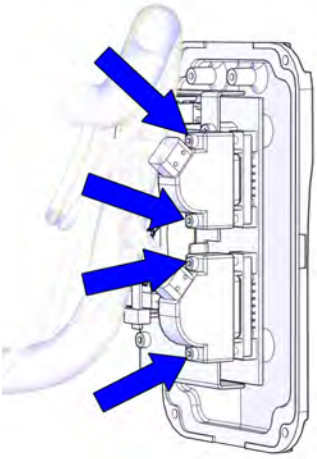 xx1700000004
8	**Valid for IRB 1200 Type B** Disconnect the connectors on the SMB unit. • R1.ME1,2,4,5 • R1.ME3,6 • R2.SMB Remove the EIB/SMB cover completely from the lower arm.	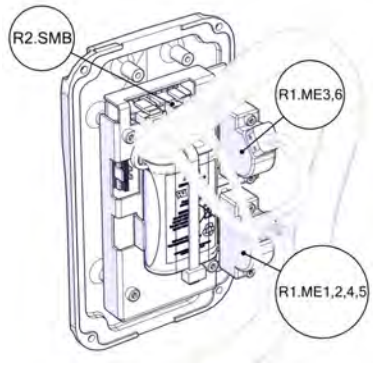 xx1700000005

Removing the cable package in the lower arm

	Action	Note
1	**DANGER** Make sure that all supplies for electrical power, hydraulic pressure, and air pressure are turned off.	

Continues on next page

© Copyright 2014 - 2017 ABB. All rights reserved.

4.3.1 Replacing the main cable package

Continued

	Action	Note
2	**CAUTION** For robots with protection type Clean Room: Always cut the paint with a knife and grind the paint edge when disassembling parts of the robot! See *Replacing parts on the robot on page 138*	
3	Pull the cable package out from the upper arm housing.	
4	Remove the fix sheet attachment screws in the lower arm.	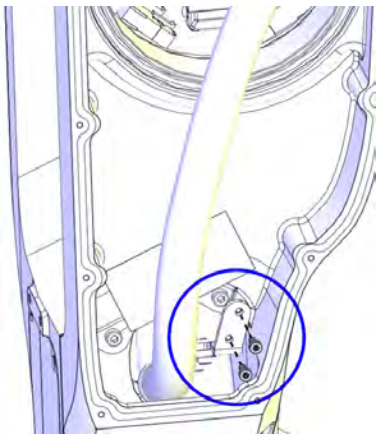 xx1300002426
5	Pull out the cable package a bit from the lower arm and remove the bracket from the cable package by removing the screws. **CAUTION** Do not loosen the cable clamp screw! There is a risk of rearrangement of the cable layout which would result in shortened lifetime of the cable harness.	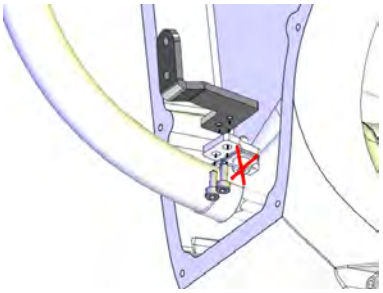 xx1300002430
6	Cut the cable strap that holds the cabling together inside the EIB/SMB cavity.	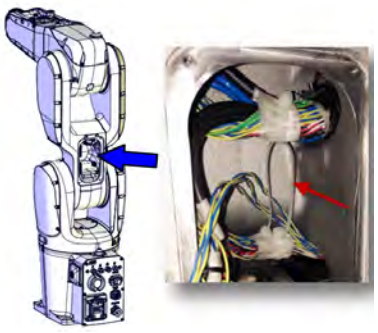 xx1400001130

Continues on next page

© Copyright 2014 - 2017 ABB. All rights reserved.

	Action	Note
7	**For robots with protection type Clean Room** Remove the swing sealing plug. Follow the procedure specified in *Removing the swing sealing plug on page 144*.	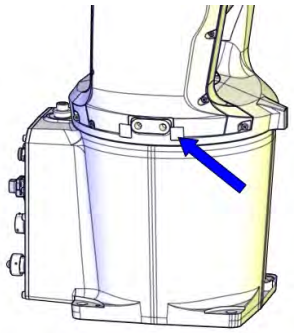 xx1600000205
8	Remove the swing cable housing cover by removing the screws.	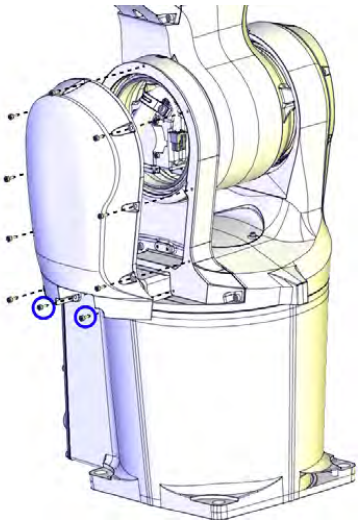 xx1300002431
9	Cut the cable straps.	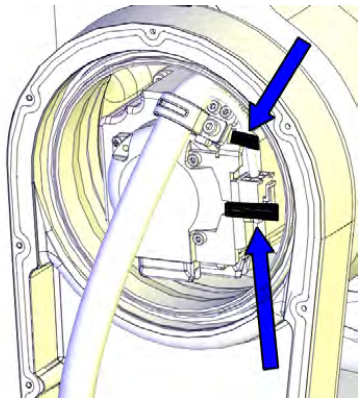 xx1400001528

Continues on next page

© Copyright 2014 - 2017 ABB. All rights reserved.

4.3.1 Replacing the main cable package

Continued

	Action	Note
10	Remove the axis-2 motor bracket screws.	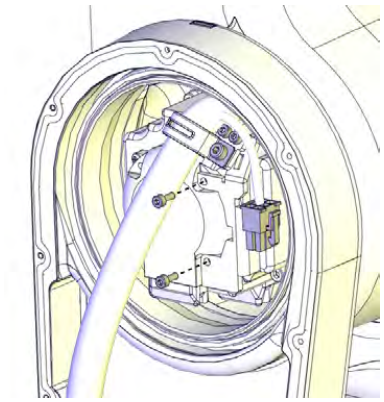 xx1300002432
11	Pull out the cabling and then remove the axis-2 motor bracket from the cable package by removing the screws. **CAUTION** Do not loosen the cable clamp screw! There is a risk of rearrangement of the cable layout which would result in shortened lifetime of the cable harness.	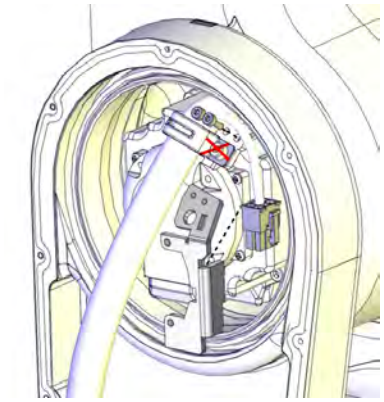 xx1300002433
12	Disconnect the motor connectors. • R2.ME2 • R2.MP2	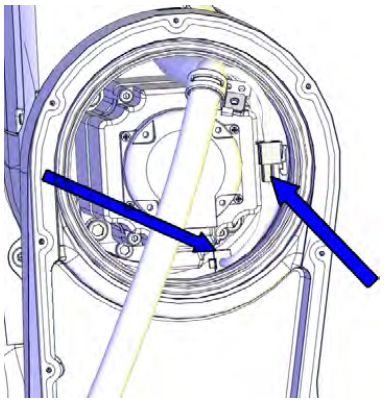 xx1300002434

Continues on next page

© Copyright 2014 - 2017 ABB. All rights reserved.

	Action	Note
13	Loosen the cable housing from the swing by removing the screws. Leave it hanging on the cable package.	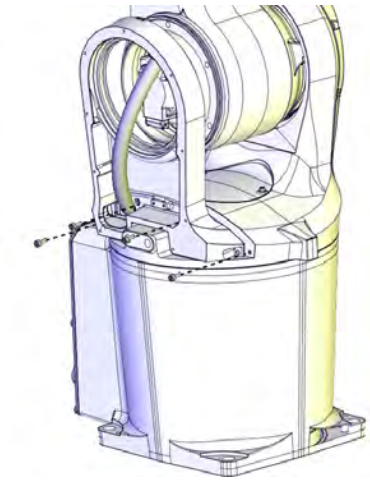 xx1300002435
14	Remove the axis-2 sealing ring by removing the screws.	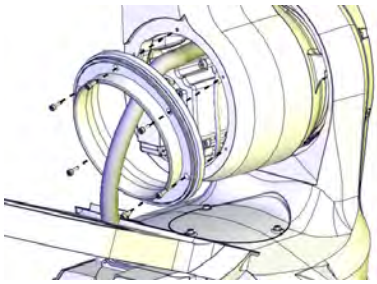 xx1400000020
15	Pull out the cable package from the lower arm. **Tip** There is a groove on the lower arm casting that simplifies cable passage, if needed. Its position can easily be felt by hand.	
16	Loosen the plastic plate from the cable housing in order to facilitate continued removal of the cable package .	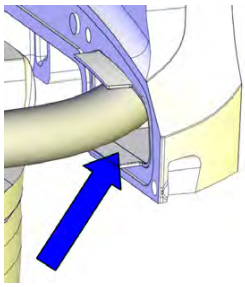 xx1400000023

Continues on next page

© Copyright 2014 - 2017 ABB. All rights reserved.

4.3.1 Replacing the main cable package

Continued

Putting the robot on its side

	Action	Note
1	 **DANGER** Make sure that all supplies for electrical power, hydraulic pressure, and air pressure are turned off.	
2	 **CAUTION** For Clean Room robots, apply a protection where the lifting accessories and round-slings will rub against the paint of the robot. In order to prevent from particle emission while lifting, put for example a 20 mm thick cellular plastic sheet around the places on the robot where the lifting accessories may rub against the paint.	
3	 **CAUTION** The robot weighs . IRB 1200-5/0.9: 54 kg IRB 1200-7/0.7: 52 kg All lifting accessories used must be sized accordingly!	

Continues on next page

© Copyright 2014 - 2017 ABB. All rights reserved.

	Action	Note
4	Run a roundsling between the housing and the lower arm. **CAUTION** Put the sling on the lower arm side and **not** on the cable arm side, which would damage the robot.	Roundsling, 2 m 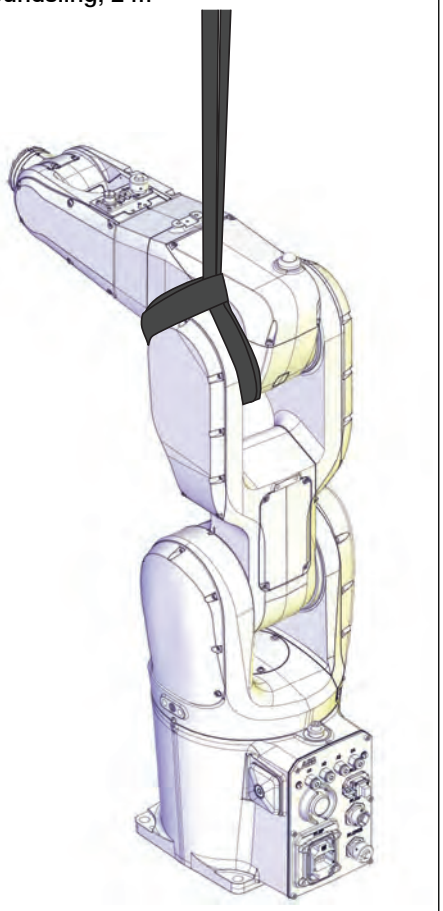 xx1400000679
5	**WARNING** The robot is likely to be mechanically unstable if not secured to the foundation!	
6	**CAUTION** The robot weighs . IRB 1200-5/0.9: 54 kg IRB 1200-7/0.7: 52 kg All lifting accessories used must be sized accordingly!	

Continues on next page

© Copyright 2014 - 2017 ABB. All rights reserved.

4.3.1 Replacing the main cable package

Continued

	Action	Note
7	Loosen the robot from the foundation by removing the foundation attachment screws and put the robot on its side.	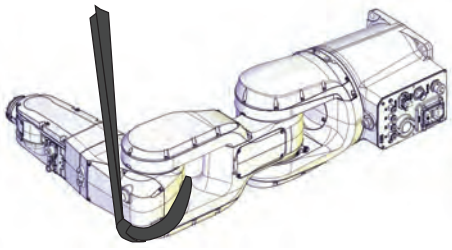 xx1400000680

Disconnecting the axis-1 motor connectors

	Action	Note
1	**DANGER** Make sure that all supplies for electrical power, hydraulic pressure, and air pressure are turned off.	
2	**CAUTION** For robots with protection type Clean Room: Always cut the paint with a knife and grind the paint edge when disassembling parts of the robot! See *Replacing parts on the robot on page 138*	

Continues on next page

© Copyright 2014 - 2017 ABB. All rights reserved.

	Action	Note
3	Remove the bottom cover.	Rear connector interface: 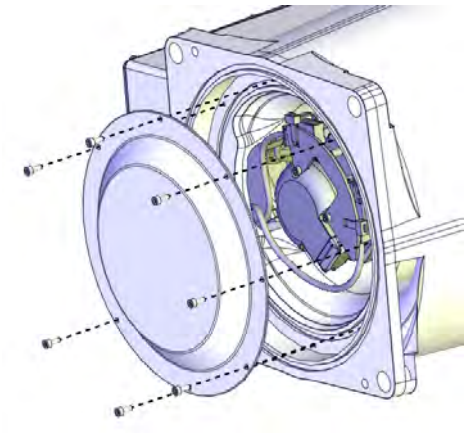 xx1300000469 Bottom connector interface: 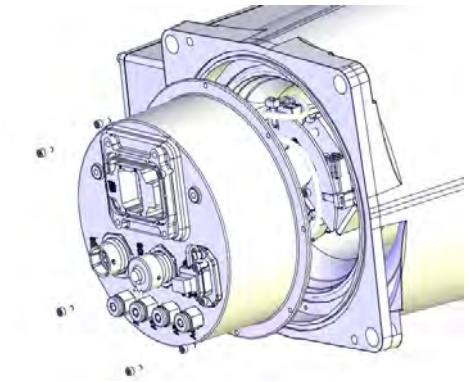 xx1400000403

Continues on next page

© Copyright 2014 - 2017 ABB. All rights reserved.

4.3.1 Replacing the main cable package

Continued

	Action	Note
4	Remove the axis-1 motor bracket.	Rear connector interface: 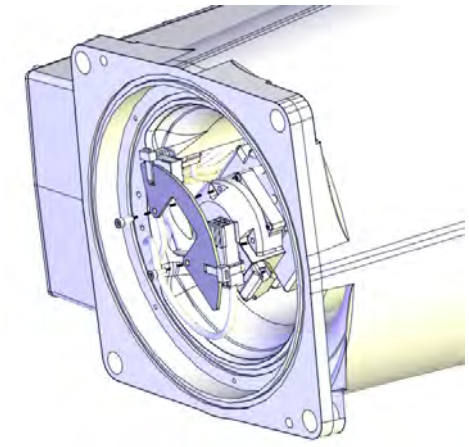 xx1300000470 Bottom connector interface: 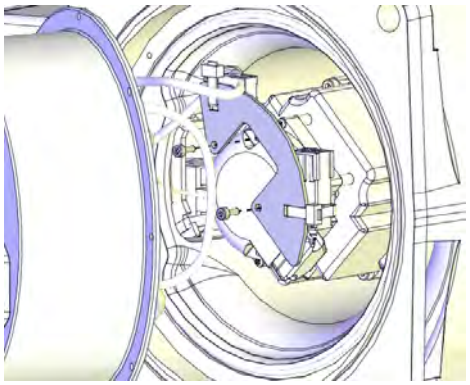 xx1400000404
5	Loosen the connectors from the bracket by cutting the cable straps, and disconnect the connectors.	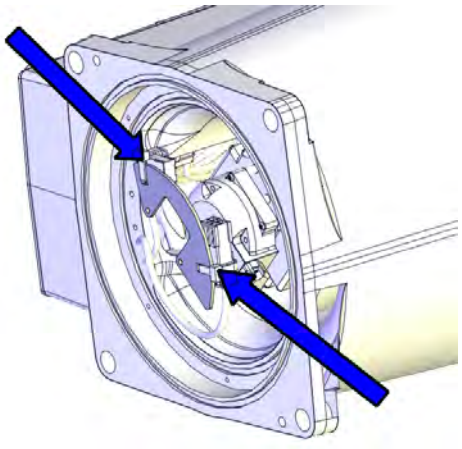 xx1300002496

Continues on next page

© Copyright 2014 - 2017 ABB. All rights reserved.

Separating the arm system from base

	Action	Note
1	**DANGER** Make sure that all supplies for electrical power, hydraulic pressure, and air pressure are turned off.	
2	**CAUTION** For robots with protection type Clean Room: Always cut the paint with a knife and grind the paint edge when disassembling parts of the robot! See *Replacing parts on the robot on page 138*	
3	Remove the swing top cover by removing the screws. **Tip** Fit M4 screws in the cover holes to pull out the cover more easily. Only tighten the screws lightly in order not to damage the threads.	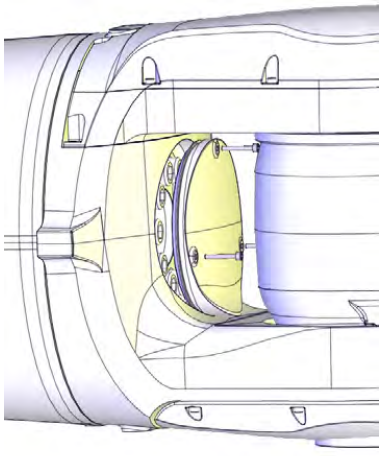 xx1300000467
4	Remove the screws and washers.	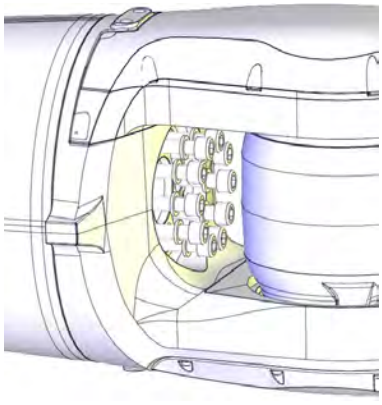 xx1300000471

Continues on next page

© Copyright 2014 - 2017 ABB. All rights reserved.

4.3.1 Replacing the main cable package

Continued

	Action	Note
5	Pull out the base slightly and turn it aside. **Tip** Remember the cable layout in the base. The cabling must be positioned and angled in the same way during refitting.	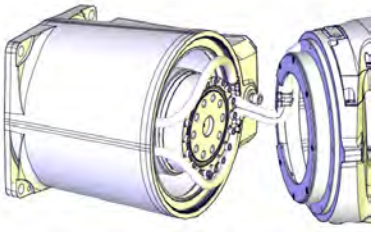 xx1300000472

Removing the cable package from the axis-1 sealing ring

	Action	Note
1	**CAUTION** For robots with protection type Clean Room: Always cut the paint with a knife and grind the paint edge when disassembling parts of the robot! See *Replacing parts on the robot on page 138*	
2	Remove the axis-1 sealing ring from the swing and carefully run the cable package out from the swing.	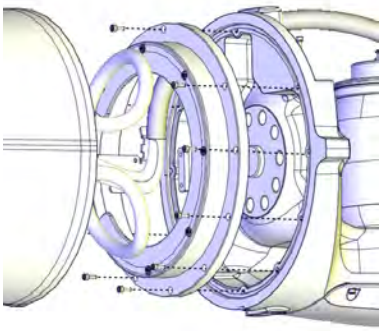 xx1300002438
3	Remove the swing (including arm system) completely from the base and lay it aside on a safe location.	
4	Remove the cable bracket from the cabling, if the cable package is to be replaced with a new spare part.	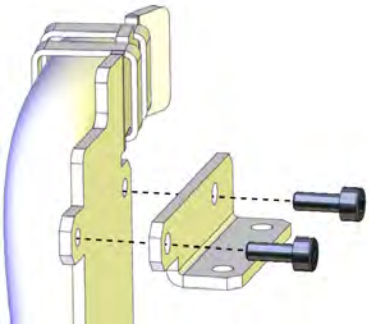 xx1300002446

Continues on next page

© Copyright 2014 - 2017 ABB. All rights reserved.

Removing the cable package from the base

Notice that the procedure differs depending on if the connector interface is located either at the rear or at the bottom of the base.

Cabling with rear interface

Use this procedure if the cable connector interface is located at the rear of the base.

	Action	Note
1	**DANGER** Make sure that all supplies for electrical power, hydraulic pressure, and air pressure are turned off.	
2	**CAUTION** For robots with protection type Clean Room: Always cut the paint with a knife and grind the paint edge when disassembling parts of the robot! See *Replacing parts on the robot on page 138*	
3	Open the base cover.	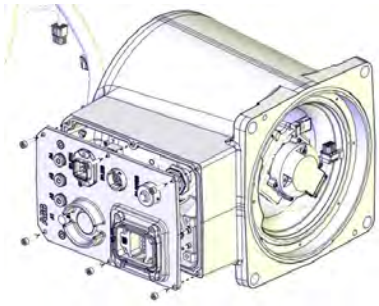 xx1300002448
4	Disconnect the earth cable.	
5	Pull the cable package out from the base, through the rear.	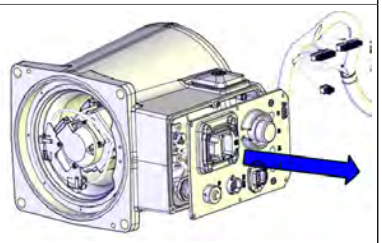 xx1300002456

Continues on next page

© Copyright 2014 - 2017 ABB. All rights reserved.

4.3.1 Replacing the main cable package

Continued

Cabling with bottom interface, and cabling routed from below (option 996-1)

Use this procedure if the cable connector interface is located at the bottom of the base and the cabling is routed from below.

	Action	Note
1	**DANGER** Make sure that all supplies for electrical power, hydraulic pressure, and air pressure are turned off.	
2	**CAUTION** For robots with protection type Clean Room: Always cut the paint with a knife and grind the paint edge when disassembling parts of the robot! See *Replacing parts on the robot on page 138*	
3	Open the base cover.	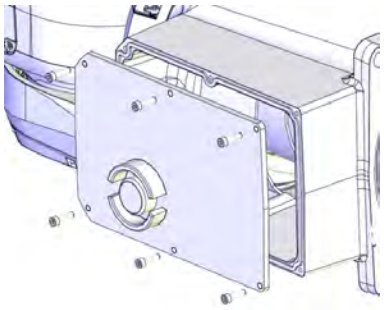 xx1400000405
4	Remove the brake release button from the base cover.	
5	Disconnect the earth cable.	
6	Remove the cable bracket by removing the screws.	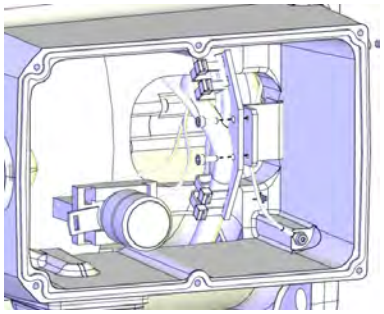 xx1400000406

Continues on next page

© Copyright 2014 - 2017 ABB. All rights reserved.

	Action	Note
7	Remove the bracket inside the base by removing the screws.	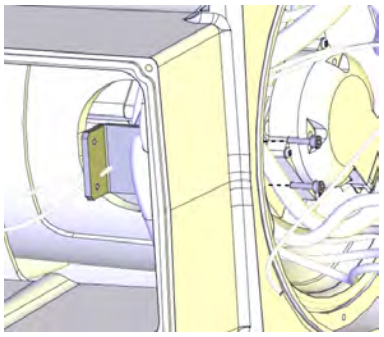 xx1400000407
8	Pull the cable package out from the base, through the bottom.	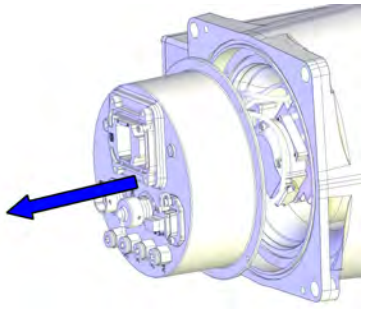 xx1400000411

Refitting the main cable package

Use these procedures to refit the cable package.

Adjusting the air hose length for IRB 1200-7/0.7

	Action	Note
1	**Valid for IRB 1200-7/0.7** If the cable harness is a new spare part, cut off 100 mm length of each air hose at the upper end. **Note** The same cable harness spare part is used for IRB 1200-5/0.9 .	

Refitting the cable package to the base

Notice that the procedure differs depending on if the connector interface is located either at the rear or at the bottom of the base.

Cabling with rear interface

Use this procedure if the cable connector interface is located at the rear of the base.

	Action	Note
1	Clean Room robots: clean the joints that have been opened. See *Replacing parts on the robot on page 138*	

Continues on next page

© Copyright 2014 - 2017 ABB. All rights reserved.

4.3.1 Replacing the main cable package

Continued

	Action	Note
2	**For robots with protection class IP67 (option 287-10)** **For robots with protection type Foundry Plus (option 287-3)** **For robots with with protection type Clean Room** **For robots with food grade lubrication** Check the gasket on the base cover. Replace if damaged.	Gasket for rear base cover: 3HAC058566-001 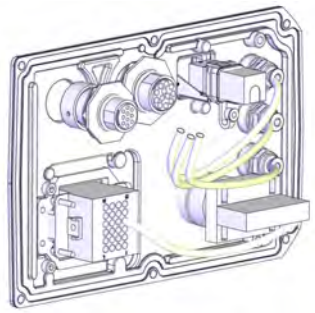 xx1400000741
3	Insert the cable package in and up through the base, through the rear.	
4	Reconnect the earth cable.	
5	Refit the base cover with the attachment screws.	Screws: 3HAB3409-212 (M4x16). Tightening torque: 4 Nm. 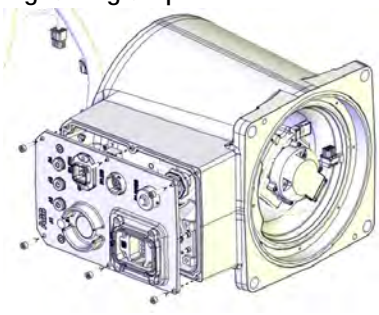 xx1300002448 **Note** Only use specified screws, never replace them with other screws.
6	Route the cable package inside the base as shown in the figure. Apply grease to the cable package, cover all moving area of the package.	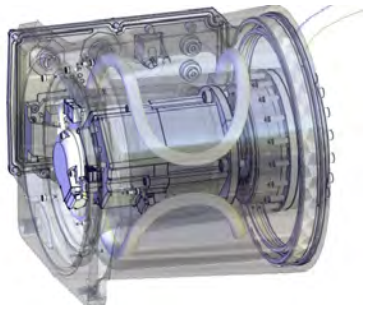 xx1400000480
7	Clean Room robots: seal and paint the joints that have been opened. See *Replacing parts on the robot on page 138* **Note** After all repair work, wipe the robot free from particles with spirit on a lint free cloth.	

Continues on next page

© Copyright 2014 - 2017 ABB. All rights reserved.

Cabling with bottom interface, cabling routed from below (option 996-1)

Use this procedure if the cable connector interface is located at the bottom of the base and the cabling is routed from below.

	Action	Note
1	Clean Room robots: clean the joints that have been opened. See *Replacing parts on the robot on page 138*	
2	Insert the cable package in and up through the base, through the bottom.	
3	Refit the bracket inside the base with the screws.	Tightening torque: 1.5 Nm. 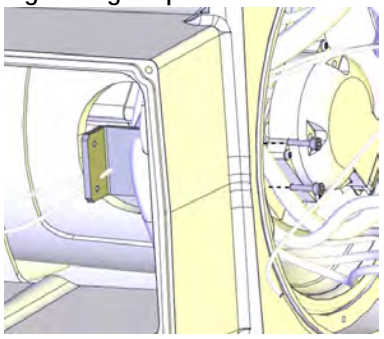 xx1400000407
4	Refit the cable bracket with the screws.	Tightening torque: 1.5 Nm. 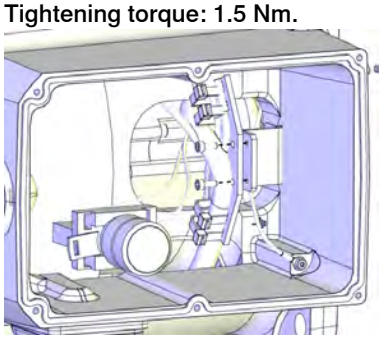 xx1400000406
5	**For robots with protection class IP67 (option 287-10)** **For robots with protection type Foundry Plus (option 287-3)** **For robots with with protection type Clean Room** **For robots with food grade lubrication** Check the gasket of the base cover. Replace if damaged.	Gasket for rear base cover: 3HAC058566-001 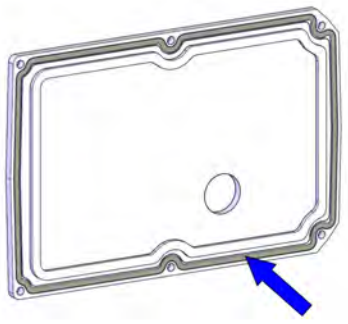 xx1400000413
6	Reconnect the earth cable.	
7	Refit the brake release button to the base cover.	

Continues on next page

© Copyright 2014 - 2017 ABB. All rights reserved.

4.3.1 Replacing the main cable package

Continued

	Action	Note
8	Refit the base cover.	Screws: 3HAB3409-212 (M4x16). Tightening torque: 4 Nm. 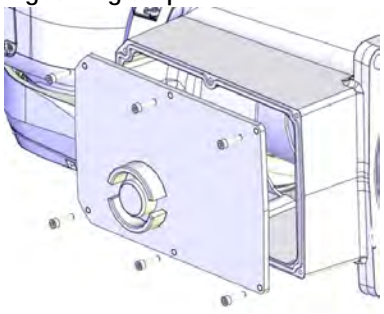 xx1400000405 **Note** Only use specified screws, never replace them with other screws.
9	Route the cable package inside the base as shown in the figure. Apply grease to the cable package, cover all moving area of the package.	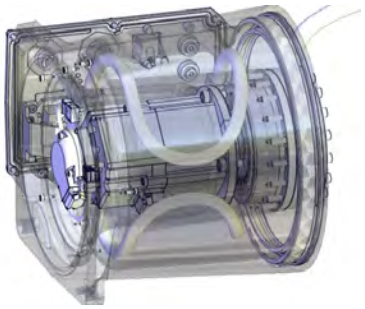 xx1400000480
10	Clean Room robots: seal and paint the joints that have been opened. See *Replacing parts on the robot on page 138* **Note** After all repair work, wipe the robot free from particles with spirit on a lint free cloth.	

Refitting the cable package to the axis-1 sealing ring

	Action	Note
1	Clean Room robots: clean the joints that have been opened. See *Replacing parts on the robot on page 138*	
2	Check the axis-1 sealing ring. Replace if damaged.	Axis-1 sealing ring: 3HAC044676-001 / 3HAC058568-001 i

Continues on next page

© Copyright 2014 - 2017 ABB. All rights reserved.

	Action	Note
3	**For robots with protection class IP67 (option 287-10)** On axis-1 sealing ring version 3HAC056658-001: Add sealant to the axis-1 sealing ring. (See *Spare part versions for the axis-1 sealing ring on IP40/IP67 robots on page 797*.)	Sealant: Sikaflex 521FC. 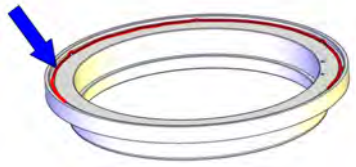 xx1600001125
4	**For robots with protection class IP67 (option 287-10)** On axis-1 sealing ring version 3HAC044676-001 or 3HAC058568-001: **For robots with protection type Foundry Plus (option 287-3)** On axis-1 sealing ring version 3HAC058568-001: Check the gasket on the axis-1 sealing ring. (See *Spare part versions for the axis-1 sealing ring on IP40/IP67 robots on page 797*.) Replace if damaged.	On axis-1 sealing ring version 3HAC044676-001: Axis-1 sealing ring gasket: 3HAC045685-001  xx1400000458 On axis-1 sealing ring version 3HAC058568-001: Axis-1 sealing ring gasket: 3HAC058349-001  xx1600001149
5	**For robots with protection class IP67 (option 287-10)** On axis-1 sealing ring version 3HAC056658-001 or 3HAC058568-001: **For robots with protection type Foundry Plus (option 287-3)** On axis-1 sealing ring version 3HAC058568-001: Check the V-ring on the axis-1 sealing ring. (See *Spare part versions for the axis-1 sealing ring on IP40/IP67 robots on page 797*.) Replace if damaged.	V-ring: 3HAB3732-34 On axis-1 sealing ring version 3HAC056658-001:  xx1600001124 On axis-1 sealing ring version 3HAC058568-001:  xx1600001150

Continues on next page

© Copyright 2014 - 2017 ABB. All rights reserved.

4.3.1 Replacing the main cable package

Continued

	Action	Note
6	Check the cable protection on the axis-1 sealing ring. Replace if damaged. If replacing the cable protection, use locking liquid Loctite 243 on the screws.	Cable protection: 3HAC044691-001 Torx countersunk head screw M3x5: 3HAC14286-4 Tightening torque: 0.3 Nm  xx1400000456
7	Refit the cable bracket to the cabling, if removed. Use Loctite 243 on the screw threads.	Tightening torque: 1 Nm. 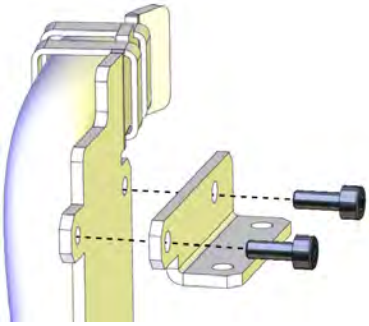 xx1300002446
8	Refit the axis-1 sealing ring to the swing and carefully run the cabling into the swing.	Tightening torque: 1.5 Nm. 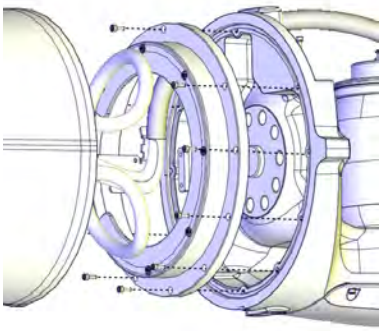 xx1300002438
9	Clean Room robots: seal and paint the joints that have been opened. See *Replacing parts on the robot on page 138* **Note** After all repair work, wipe the robot free from particles with spirit on a lint free cloth.	

i For information on which sealing ring to be ordered, see *Spare part versions for the axis-1 sealing ring on IP40/IP67 robots on page 797*.

Continues on next page

© Copyright 2014 - 2017 ABB. All rights reserved.

Assembling the swing and base

	Action	Note
1	Clean Room robots: clean the joints that have been opened. See *Replacing parts on the robot on page 138*	
2	Check the axis-1 radial sealing and the M2 variseal sealing in the base. Replace if damaged. **Note** For Clean Room robots, apply a little grease to the sealing when replacing the radial sealing and wipe clean after the replacement. The M2 variseal sealing is only installed on base version 3HAC049628-001. See *Spare part versions for the base on IP40/IP67 robots on page 793*. **CAUTION** Do not fit M2 variseal sealing on Clean Room robots.	Radial sealing with dust lip: 3HAB3701-47 M2 variseal sealing: 3HAC044641-002 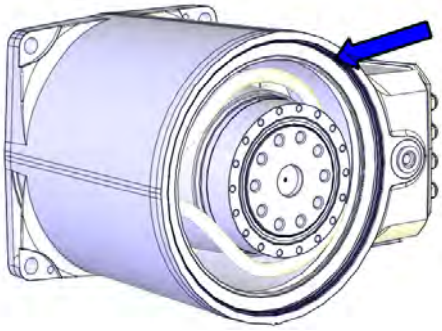 xx1400000472 Replacement is detailed in *Replacing the base spare parts (base, axis-1 radial sealing, protection sleeve) on page 442*.
3	**For robots with protection class IP67 (option 287-10)** **For robots with protection type Foundry Plus (option 287-3)** Apply grease to the radial sealing surface.	Grease: 3HAC058065-001. 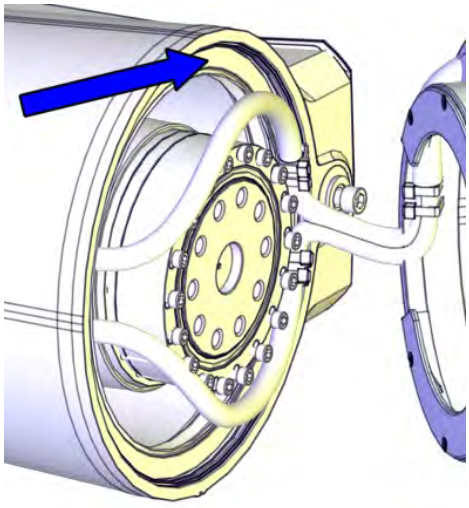 xx1600000170

Continues on next page

© Copyright 2014 - 2017 ABB. All rights reserved.

4.3.1 Replacing the main cable package

Continued

	Action	Note
4	Fit the guide pins to the drive unit.	Guide pin for axis-1 gear unit: 3HAC049703-001 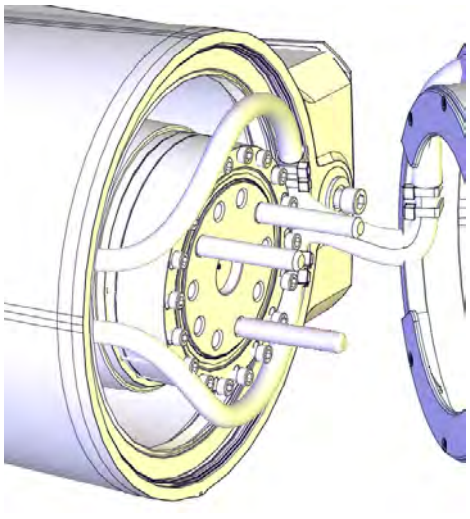 xx1300002566 Always use three guide pins together!
5	Refit the swing to the base with guidance from the guide pins while running the cabling up through the swing. Position and angle the cabling inside the base as it was positioned during removal. **CAUTION** Be careful not to squeeze any cabling during the refitting procedure.	
6	Secure with attachment screws and washers, but do not tighten yet.	Screws: 3HAB3409-52 (M10x35). 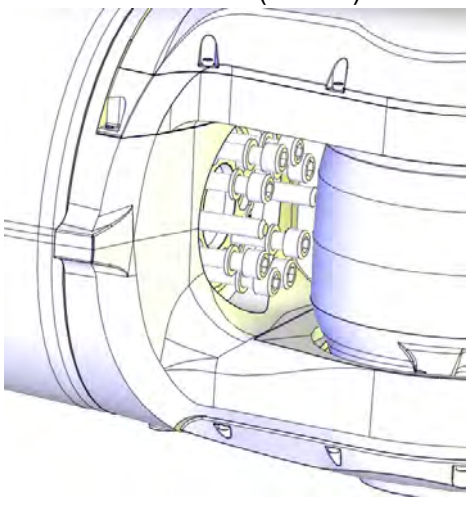 xx1300002567 **Note** Only use specified screws, never replace them with other screws.

Continues on next page

© Copyright 2014 - 2017 ABB. All rights reserved.

	Action	Note
7	Remove the guide pins and refit the remaining attachment screws and washers.	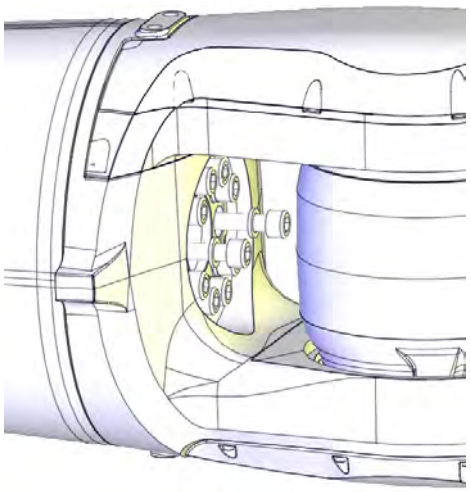 xx1300000523
8	Tighten all screws.	Tightening torque: 40 Nm.
9	**For robots with protection class IP67 (option 287-10)** **For robots with protection type Foundry Plus (option 287-3)** **For robots with with protection type Clean Room** **For robots with food grade lubrication** Check the gasket. Replace if damaged.	Gasket on top swing cover: 3HAC056696-001 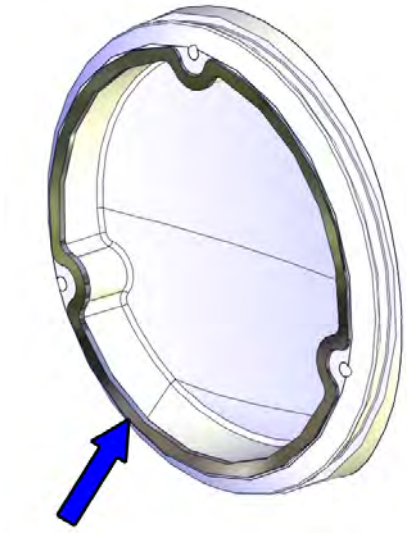 xx1400000425

Continues on next page

© Copyright 2014 - 2017 ABB. All rights reserved.

4.3.1 Replacing the main cable package

Continued

	Action	Note
10	Refit the swing top cover with the screws. Replace if damaged.	Cover on top of swing: 3HAC059679-001 : 3HAC056133-001 (used with protection type Clean Room) Cover on top of swing, Clean Room Cover on top of swing, food grade lubrication Screws: 3HAB3409-209 (M3x20). Tightening torque: 1.5 Nm. 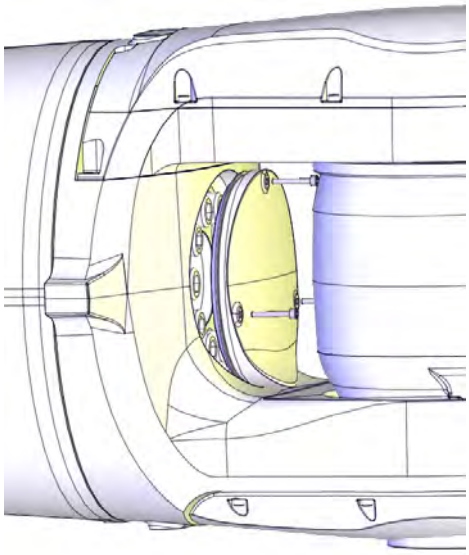 xx1300000467 **Note** Only use specified screws, never replace them with other screws.
11	Clean Room robots: seal and paint the joints that have been opened. See *Replacing parts on the robot on page 138* **Note** After all repair work, wipe the robot free from particles with spirit on a lint free cloth.	

Connecting the axis-1 motor connectors

	Action	Note
1	Clean Room robots: clean the joints that have been opened. See *Replacing parts on the robot on page 138*	

Continues on next page

© Copyright 2014 - 2017 ABB. All rights reserved.

	Action	Note
2	Reconnect the connectors and secure the connectors to the bracket with cable straps.	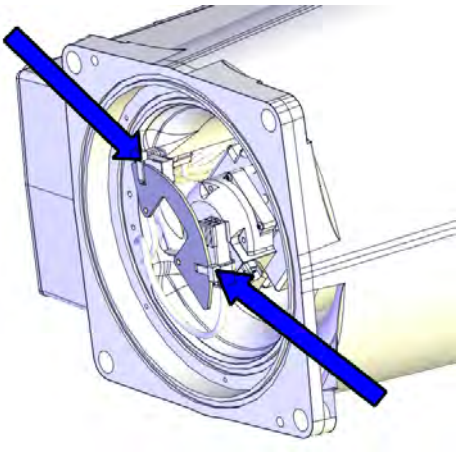 xx1300002496
3	Refit the axis-1 motor bracket.	Tightening torque: 1.5 Nm. Rear connector interface: 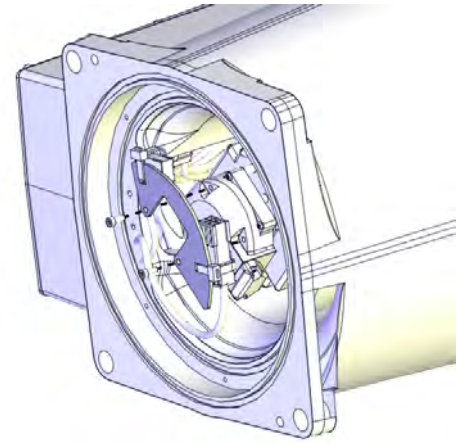 xx1300000470 Bottom connector interface: 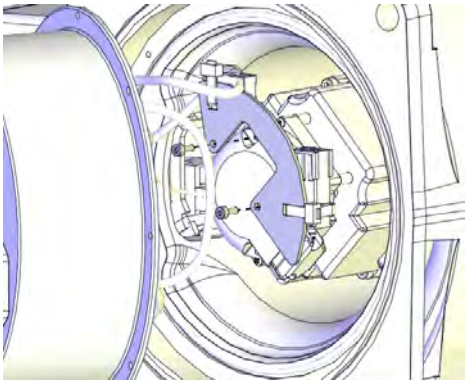 xx1400000404

Continues on next page

© Copyright 2014 - 2017 ABB. All rights reserved.

4.3.1 Replacing the main cable package

Continued

	Action	Note
4	**For robots with protection class IP67 (option 287-10)** **For robots with protection type Foundry Plus (option 287-3)** **For robots with with protection type Clean Room** **For robots with food grade lubrication** Check the O-ring. Replace if damaged.	O-ring: 3HAB3772-86 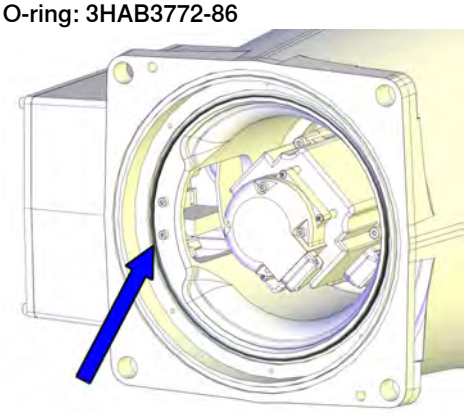 xx1400000412
5	Refit the bottom cover.	Screws: 3HAB3409-207 (M3x8). Tightening torque: 1.5 Nm. Rear connector interface: 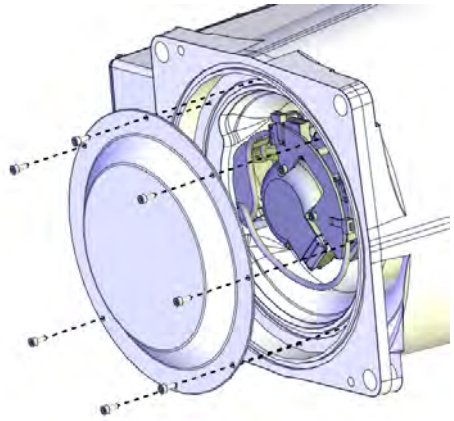 xx1300000469 Bottom connector interface: 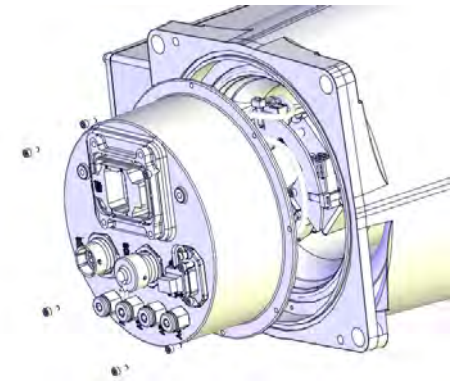 xx1400000403 **Note** Only use specified screws, never replace them with other screws.

Continues on next page

© Copyright 2014 - 2017 ABB. All rights reserved.

	Action	Note
6	Clean Room robots: seal and paint the joints that have been opened. See *Replacing parts on the robot on page 138* **Note** After all repair work, wipe the robot free from particles with spirit on a lint free cloth.	

Securing the robot to the foundation

	Action	Note
1	**CAUTION** The robot weighs . IRB 1200-5/0.9: 54 kg IRB 1200-7/0.7: 52 kg All lifting accessories used must be sized accordingly!	
2	**For robots with:** **protection class IP67 (option 287-10),** **protection type Foundry Plus (option 287-3),** **and manipulator cables routed from below (option 996-1)** Check the gasket at the bottom of the base. Replace if damaged.	O-ring: 3HAB3772-141 Used with protection class IP67. Used with protection type Foundry Plus. Used with manipulator cables routed from below (option 996-1) 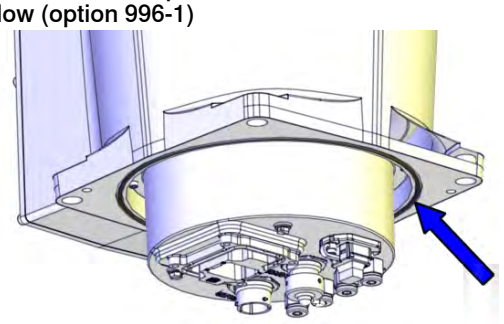 xx1500000241
3	Raise the robot to standing and secure to the foundation with the attachment screws and washers.	Attachment screws: M12x35 (robot installation directly on foundation), quality: 8.8. Washers: 13 x 20 x 2, steel hardness class 300HV. Pin: 2 pcs, D6x20, ISO 2338 - 6m6x20 - A1. Tightening Torque: 55 Nm ± 5 Nm.

Refitting the cable package in the lower arm

	Action	Note
1	Clean Room robots: clean the joints that have been opened. See *Replacing parts on the robot on page 138*	

Continues on next page

© Copyright 2014 - 2017 ABB. All rights reserved.

4.3.1 Replacing the main cable package

Continued

	Action	Note
2	Check the axis-2 sealing ring. **For robots with protection class IP67 (option 287-10)** **For robots with protection type Foundry Plus (option 287-3)** **For robots with with protection type Clean Room** **For robots with food grade lubrication** Check the gasket. Replace if damaged.	Axis-2 sealing ring: 3HAC044677-001 Gasket of axis-2 sealing ring: 3HAC045688-001 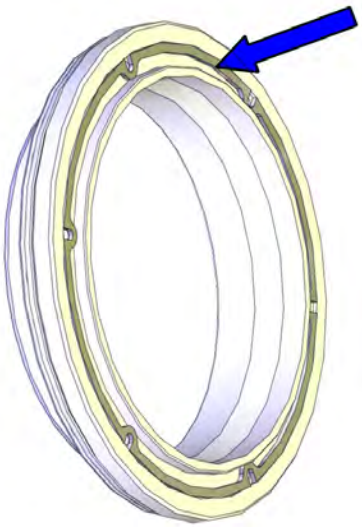 xx1400000476
3	**For robots with protection class IP67 (option 287-10)** **For robots with protection type Foundry Plus (option 287-3)** **For robots with with protection type Clean Room** **For robots with food grade lubrication** Check the gasket of the cable housing plastic plate. Replace if damaged.	Gasket of plastic plate: 3HAC044894-001 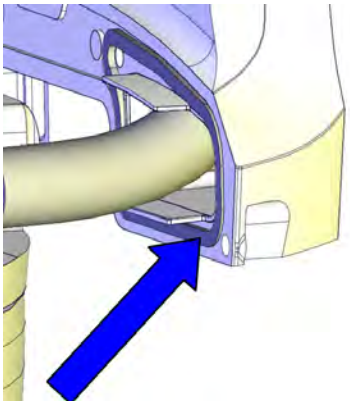 xx1400000457
4	Fetch the cable housing, the plastic plate and the axis-2 sealing ring and run the cable package through them.	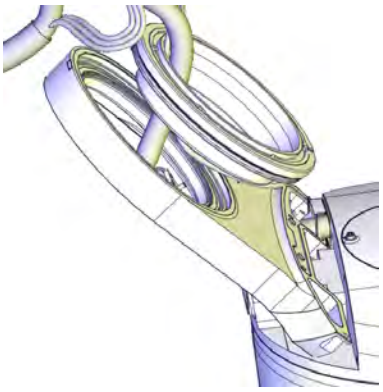 xx1400000025

Continues on next page

© Copyright 2014 - 2017 ABB. All rights reserved.

	Action	Note
5	Fasten the plastic plate to the cable housing, if removed. Replace if damaged.	The plastic plate is included in: Cable harness material set: 3HAC049663-001. 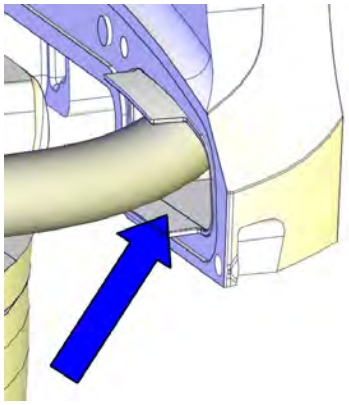 xx1400000023
6	**For robots with protection class IP67 (option 287-10)** **For robots with protection type Foundry Plus (option 287-3)** Check the sealing. Replace if damaged. **CAUTION** Do not fit M2 variseal sealing on Clean Room robots.	M2 variseal sealing: 3HAC044641-004 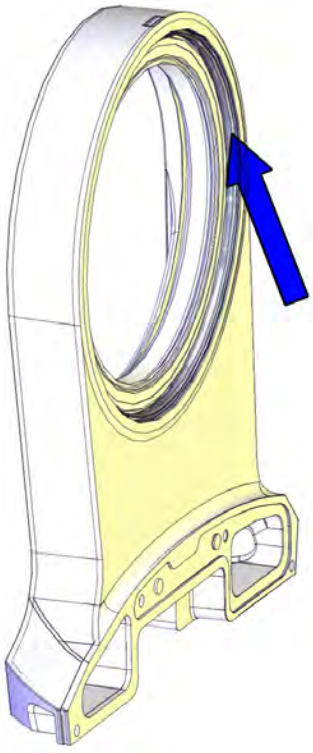 xx1400000454

Continues on next page

© Copyright 2014 - 2017 ABB. All rights reserved.

4.3.1 Replacing the main cable package

Continued

	Action	Note
7	**For robots with protection class IP67 (option 287-10)** **For robots with protection type Foundry Plus (option 287-3)** **For robots with with protection type Clean Room** **For robots with food grade lubrication** Check the radial sealing. Replace if damaged. **Note** For Clean Room robots, apply a little grease to the sealing when replacing the radial sealing and wipe clean after the replacement.	Radial sealing with dust lip: 3HAB3701-41 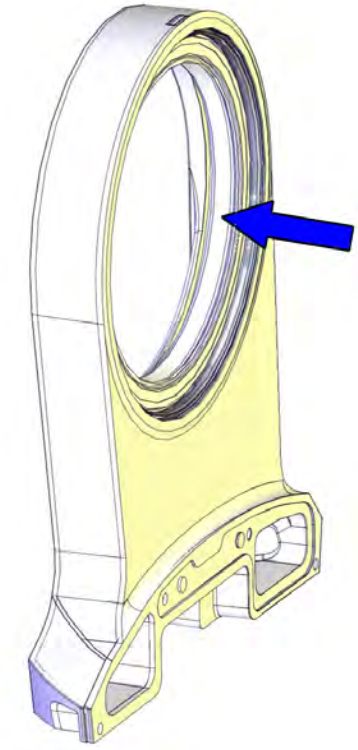 xx1400000753 Replacement is detailed in *Replacing the swing spare parts (swing, axis-2 radial sealing) on page 518*.
8	Guide the cable package into the lower arm. **Tip** There is a groove on the lower arm casting that simplifies cable passage, if needed. Its position can easily be felt by hand.	
9	Refit the axis-2 sealing ring with the screws.	Tightening torque: 1.5 Nm. 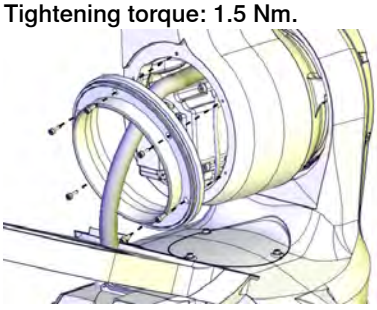 xx1400000020

Continues on next page

© Copyright 2014 - 2017 ABB. All rights reserved.

	Action	Note
10	Refit the cable housing with the screws.	Screws: 3HAB3409-236 (M4x10). Tightening torque: 3 Nm. 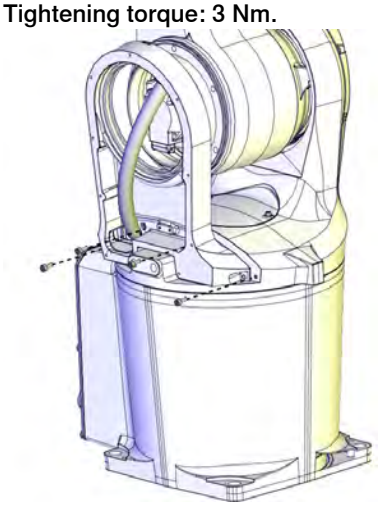 xx1300002435 **Note** Only use specified screws, never replace them with other screws.
11	Apply grease to the cable package, cover all moving area of the package.	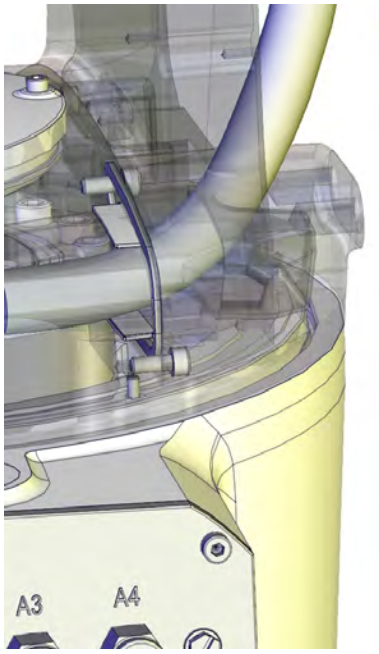 xx1400000481

Continues on next page

© Copyright 2014 - 2017 ABB. All rights reserved.

4.3.1 Replacing the main cable package

Continued

	Action	Note
12	Reconnect the motor connectors. • R2.ME2 • R2.MP2	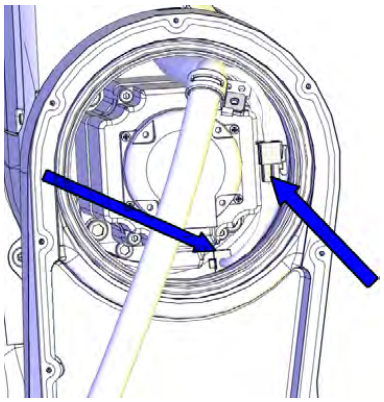 xx1300002434
13	Refit the axis-2 motor bracket to the cable package with the two screws. **CAUTION** Do not loosen the cable clamp screw! There is a risk of rearrangement of the cable layout which would result in shortened lifetime of the cable harness.	Tightening torque: 1.5 Nm. 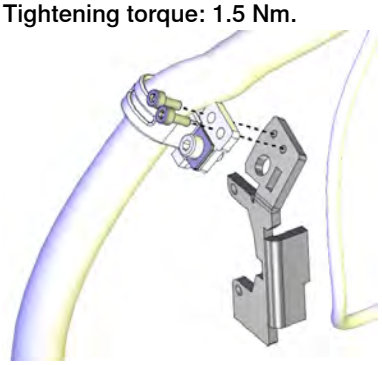 xx1400000021
14	Refit the axis-2 motor bracket to the motor.	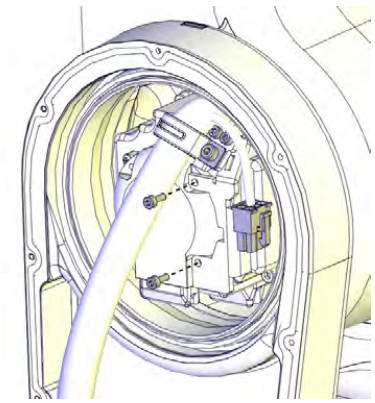 xx1300002432

Continues on next page

© Copyright 2014 - 2017 ABB. All rights reserved.

	Action	Note
15	Secure the connector R2.MP2 and its cable with cable straps onto the motor bracket. Make sure the connector is fixed by its tab to the bracket.	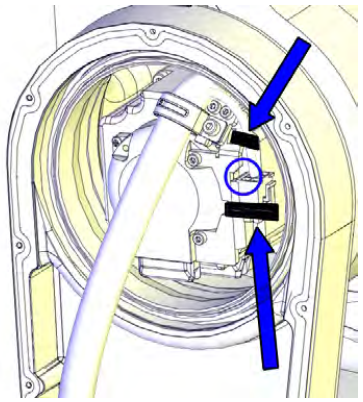 xx1400001529
16	Apply grease to the cable package, cover all moving area of the package.	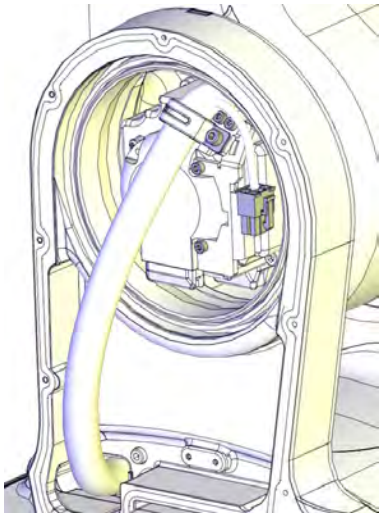 xx1400000482
17	In order to keep the cabling away from the hot axis-2 motor, the cable package must be secured accordingly inside the EIB/SMB cavity: 1 The cable package is strapped with tape by the supplier at two locations. Put a cable strap around the cable package at each location. 2 Insert a third cable strap through the top strap and the bottom strap, and close the strap to secure the cable package and keep it in place. See the figure.	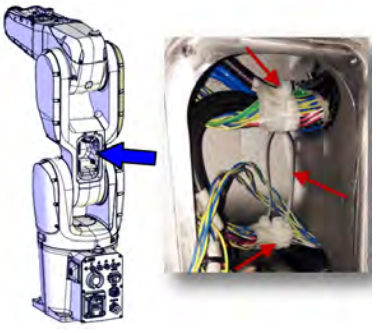 xx1400001131

Continues on next page

© Copyright 2014 - 2017 ABB. All rights reserved.

4.3.1 Replacing the main cable package

Continued

	Action	Note
18	**For robots with protection class IP67 (option 287-10)** **For robots with protection type Foundry Plus (option 287-3)** **For robots with with protection type Clean Room** **For robots with food grade lubrication** Check the gasket of the cable housing cover. Replace if damaged.	Gasket on cable housing cover: 3HAC056726-001 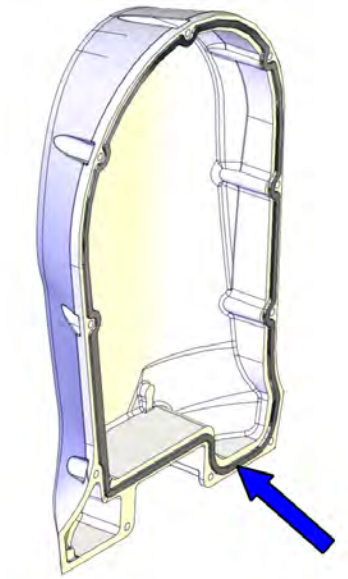 xx1400000424
19	Check the PTFE film. Replace if damaged.	PTFE film on cable housing cover: 3HAC044660-001
20	Apply grease to the inner surface of the cable housing cover and to the PTFE film surface.	

Continues on next page

© Copyright 2014 - 2017 ABB. All rights reserved.

	Action	Note
21	Refit the cable housing cover. Replace if damaged. **Note** Remember to refit the two lower screws shown in the figure.	Cable housing cover of the swing: 3HAC059678-001 : 3HAC056214-001 (used with protection type Clean Room) Cable housing cover of the swing, Clean Room Cable housing cover of the swing, food grade lubrication Screws: 3HAB3409-207 (M3x8). Tightening torque: 1.5 Nm. 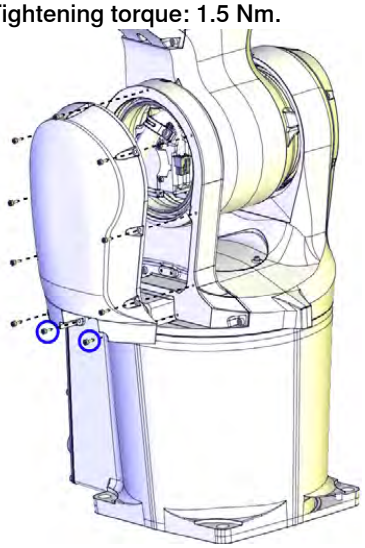 xx1300002431 **Note** Only use specified screws, never replace them with other screws.
22	**For robots with protection type Foundry Plus (option 287-3)** Check the protection plugs for lifting holes. Replace if damaged.	Protection plug for lifting holes: 3HAC4836-24 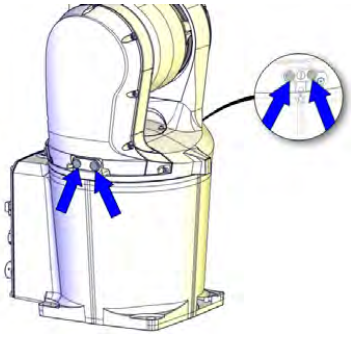 xx1600001151

Continues on next page

© Copyright 2014 - 2017 ABB. All rights reserved.

4.3.1 Replacing the main cable package

Continued

	Action	Note
23	**For robots with with protection type Clean Room** **For robots with food grade lubrication** Refit the swing sealing plug. Follow the procedure specified in *Refitting the swing sealing plug on page 145*.	Swing sealing plug:3HAC053687-001 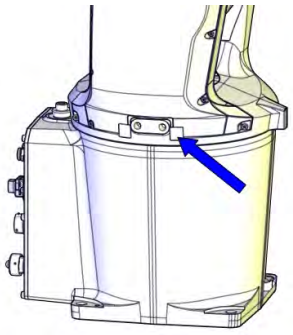 xx1600000205
24	Refit the lower arm bracket to the cable package. **CAUTION** Do not loosen the cable clamp screw! There is a risk of rearrangement of the cable layout which would result in shortened lifetime of the cable harness.	Tightening torque: 1.5 Nm. 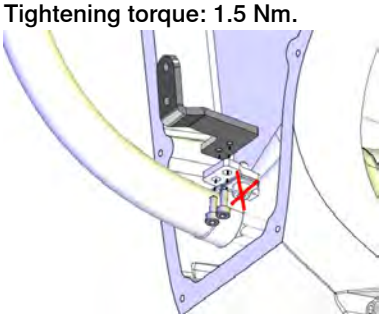 xx1300002430
25	Clean Room robots: seal and paint the joints that have been opened. See *Replacing parts on the robot on page 138* **Note** After all repair work, wipe the robot free from particles with spirit on a lint free cloth.	

Connecting the cabling in the lower arm

	Action	Note
1	**ELECTROSTATIC DISCHARGE (ESD)** The unit is sensitive to ESD. Before handling the unit please read the safety information in the section *WARNING - The unit is sensitive to ESD! on page 50*	
2	Clean Room robots: clean the joints that have been opened. See *Replacing parts on the robot on page 138*	

Continues on next page

© Copyright 2014 - 2017 ABB. All rights reserved.

	Action	Note
3	**For robots with protection class IP67 (option 287-10)** **For robots with protection type Foundry Plus (option 287-3)** **For robots with with protection type Clean Room** **For robots with food grade lubrication** Check the EIB/SMB cover gasket. Replace if damaged.	Gasket on EIB/SMB cover: 3HAC056728-001 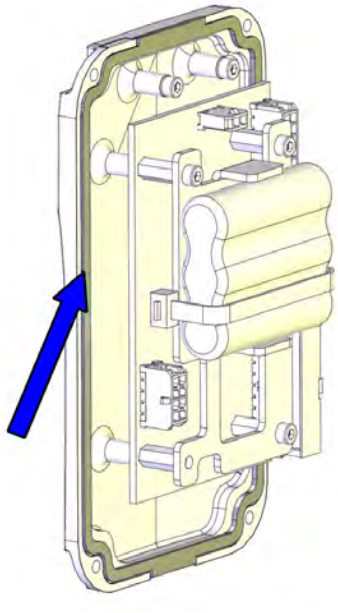 xx1400000475
4	**Valid for IRB 1200 (no type specified) and IRB 1200 Type A** Connect the connectors to the EIB unit. • R1.ME1-3 • R1.ME4-6 • R2.EIB **WARNING** Make sure not to mix the R2.EIB and R2.ME2. Axis 2 may be severely damaged. See the labels on the connectors for correct connection.	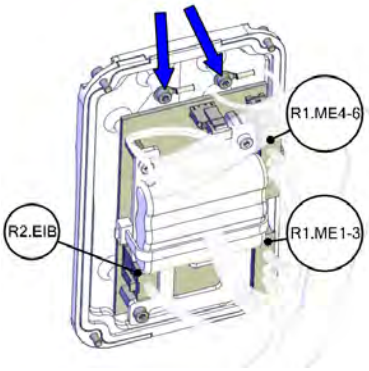 xx1300002428
5	**Valid for IRB 1200 (no type specified) and IRB 1200 Type A** Connect the lugs to the EIB/SMB cover.	
6	**Valid for IRB 1200 Type B** Connect the connectors to the SMB unit. • R1.ME1,2,4,5 • R1.ME3,6 • R2.SMB **WARNING** Make sure not to mix the R2.SMB and R2.ME2. Axis 2 may be severely damaged. See the labels on the connectors for correct connection.	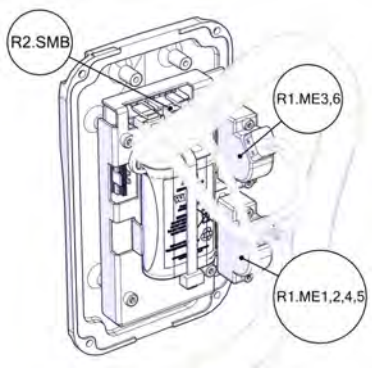 xx1700000005

Continues on next page

© Copyright 2014 - 2017 ABB. All rights reserved.

4.3.1 Replacing the main cable package

Continued

	Action	Note
7	**Valid for IRB 1200 Type B** Tighten the connector screws.	Tightening torque: 0.3 Nm 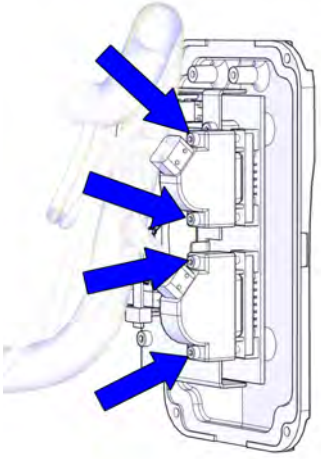 xx1700000004
8	Refit the EIB/SMB cover to the lower arm with the attachment screws.	Screws: 3HAB3409-207 (M3x8). Tightening torque: 1.5 Nm 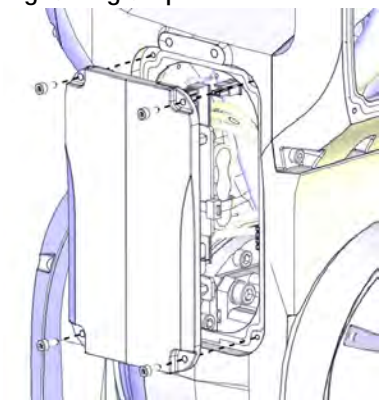 xx1300002427 **Note** Only use specified screws, never replace them with other screws.

Continues on next page

© Copyright 2014 - 2017 ABB. All rights reserved.

	Action	Note
9	Refit the fix sheet attachment screws in the lower arm.	Tightening torque: 1.5 Nm. 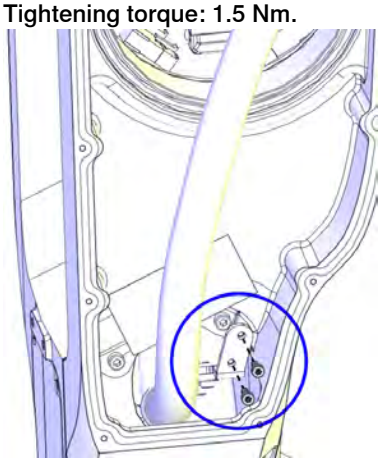 xx1300002426
10	Clean Room robots: seal and paint the joints that have been opened. See *Replacing parts on the robot on page 138* **Note** After all repair work, wipe the robot free from particles with spirit on a lint free cloth.	

Refitting the cable package in the housing

	Action	Note
1	Clean Room robots: clean the joints that have been opened. See *Replacing parts on the robot on page 138*	
2	Before guiding the cable package into the housing and upper arm, apply grease to the cable package, to the area going into the upper arm, shown in the figure. Cover all moving area of the package.	Area to be lubricated, shown in cable package already fitted to the housing. 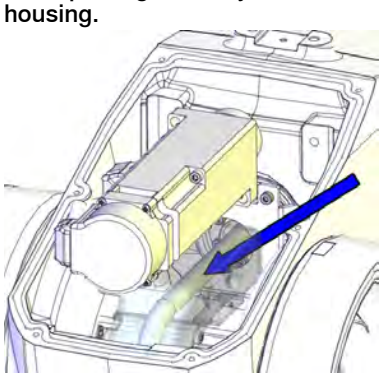 xx1400000483

Continues on next page

© Copyright 2014 - 2017 ABB. All rights reserved.

4.3.1 Replacing the main cable package

Continued

	Action	Note
3	Guide the cable package into the upper arm, through the housing. **Note** Guide the air hoses (A) underneath the bottom side of the axis-3 motor and the axis-3 motor cables (B) on top of the motor, see cable layout figure. The fix point of the air hoses is pre-determined (marked) and must be matched against the air hose holder on the left side of the axis-3 motor. **Note** The air hose holder keeps the air hoses arranged in an optimized way. It is necessary to keep the air hose holder vertically and firmly against the left side of the axis-3 motor.	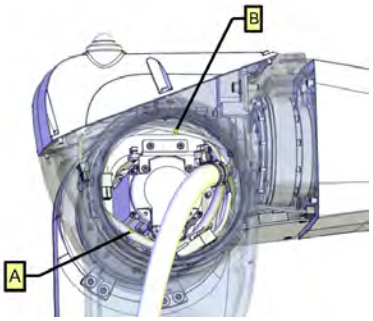 xx1400001472
4	Refit the bracket to the sheet with two screws. **CAUTION** Do not loosen the cable clamp screw! There is a risk of rearrangement of the cable layout which would result in shortened lifetime of the cable harness.	Tightening torque: 1.5 Nm. 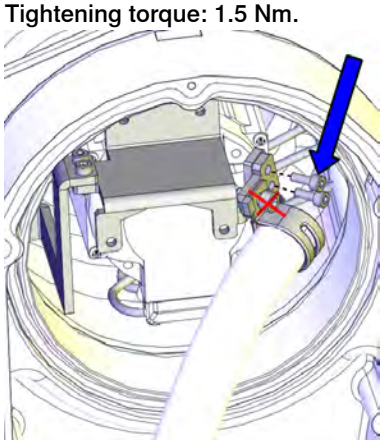 xx1300002424
5	Refit the fix sheet to the motor.	Tightening torque: 1.5 Nm. 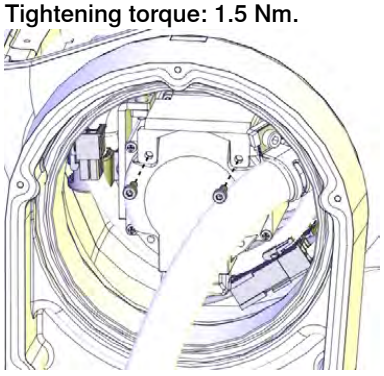 xx1300002423

Continues on next page

© Copyright 2014 - 2017 ABB. All rights reserved.

	Action	Note
6	Refit the fix sheet to the inner plastic guide.	Tightening torque: 1.5 Nm. 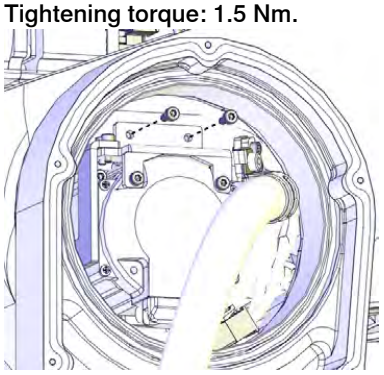 xx1300002421
7	Fit the air hose holder to the bracket. Replace the holder, if damaged. **Tip** If the air hose holder is difficult to fit, firstly remove the bracket from the fix sheet by removing the two M3 screws. Fit the holder to the bracket and then refit the complete assembly to the fix sheet again. Tightening torque for the two M3 screws: 1.5 Nm. 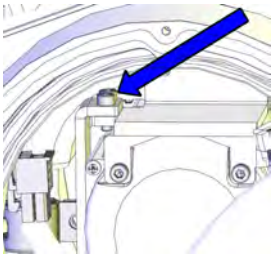 xx1400001133	Air hose holders are included in Cable harness material set (3HAC049663-001). Tightening torque: 4 Nm. 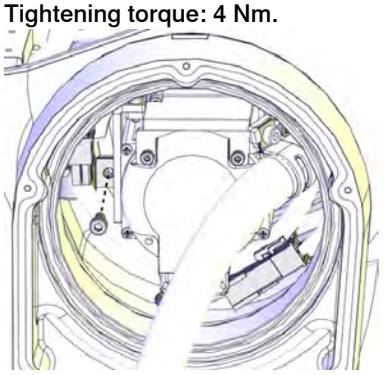 xx1300002422
8	Reconnect the axis-3 motor connectors.	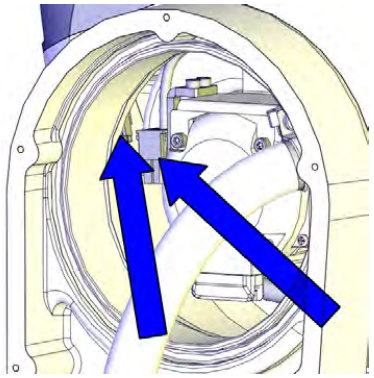 xx1300002420

Continues on next page

© Copyright 2014 - 2017 ABB. All rights reserved.

4.3.1 Replacing the main cable package

Continued

	Action	Note
9	Apply grease to the cable package, cover all moving area of the package.	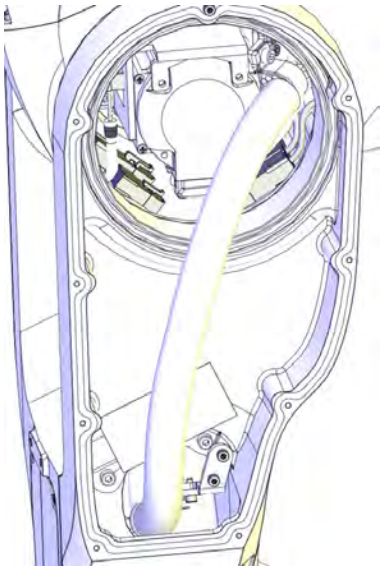 xx1400000754
10	**Valid for IRB 1200-5/0.9** Secure the cable package at the bottom of the housing with cable straps.	
11	Clean Room robots: seal and paint the joints that have been opened. See *Replacing parts on the robot on page 138* **Note** After all repair work, wipe the robot free from particles with spirit on a lint free cloth.	

Connecting the axis-4 motor connectors

	Action	Note
1	Reconnect the motor connectors.	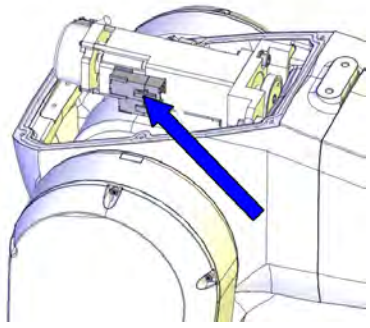 xx1300002371

Continues on next page

© Copyright 2014 - 2017 ABB. All rights reserved.

	Action	Note
2	Secure the connectors to the motor with a cable strap.	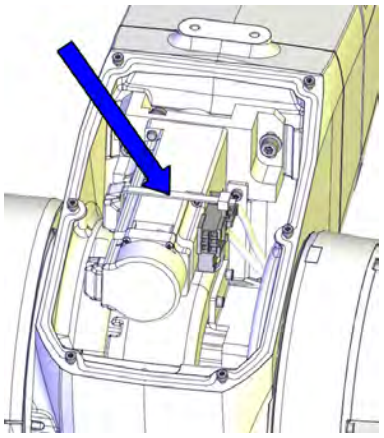 xx1300002494

Connecting the axis-4 FPC connectors

	Action	Note
1	Clean Room robots: clean the joints that have been opened. See *Replacing parts on the robot on page 138*	
2	Reconnect the FPC connectors. **Tip** See the number markings on the connectors for help to find the corresponding connector.	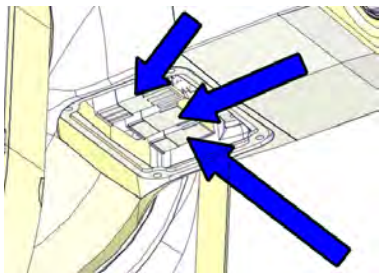 xx1300002399

Continues on next page

© Copyright 2014 - 2017 ABB. All rights reserved.

4.3.1 Replacing the main cable package

Continued

	Action	Note
3	Reconnect the FPC connectors and push them into place inside the housing. **Tip** See the number markings on the connectors for help to find the corresponding connector.	Cable layout in IRB 1200-7/0.7 : 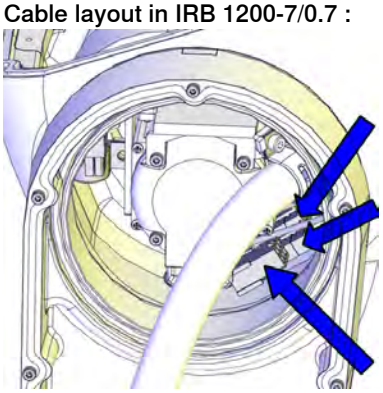 xx1300002412 Cable layout in IRB 1200-5/0.9 : 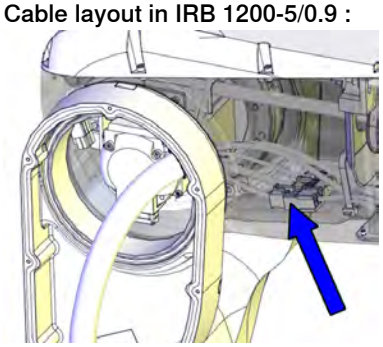 xx1400001471
4	Remove residual locking liquid and other pollutants with cleaning agent Loctite 7063.	

Continues on next page

© Copyright 2014 - 2017 ABB. All rights reserved.

	Action	Note
5	**For robots with protection class IP67 (option 287-10)** **For robots with protection type Foundry Plus (option 287-3)** Apply flange sealing Sikaflex 521FC on the mounting surfaces of the small cover on the housing.	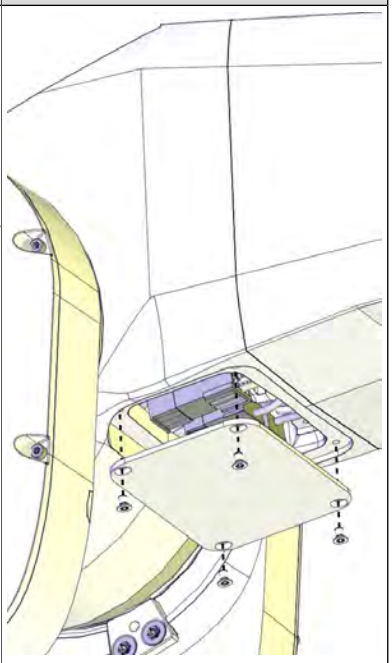 xx1300002398 Housing small cover: 3HAC059684-001 : 3HAC056142-001 (used with protection type Clean Room) Housing small cover, Clean Room Housing small cover, food grade lubrication Screws: 3HAC14286-4 (M3X5). Tightening torque: 1 Nm.
6	Refit the small cover to the housing. Replace if damaged.	
7	**For robots with protection type Clean Room** Apply a string of the sealant Sikaflex 521FC to the joint of the small cover on the housing. Smooth out the sealant string using a finger tip. Use washing-up on finger tips to get a smooth joint. If necessary, add extra sealant to get a full cover joint.	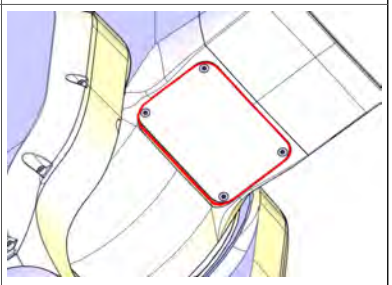 xx1600000214

Continues on next page

© Copyright 2014 - 2017 ABB. All rights reserved.

4.3.1 Replacing the main cable package

Continued

	Action	Note
8	Refit the plate.	Tightening torque: 1.5 Nm. 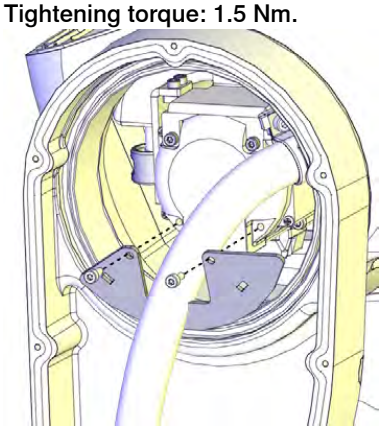 xx1300002413
9	Check the PTFE film on the cable housing. Replace if damaged.	PTFE film on lower arm cable housing: 3HAC044710-001 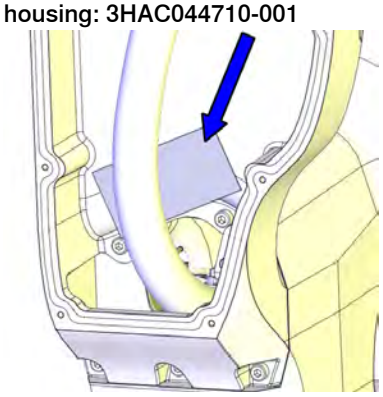 xx1400000740

Continues on next page

© Copyright 2014 - 2017 ABB. All rights reserved.

	Action	Note
10	**For robots with protection class IP67 (option 287-10)** **For robots with protection type Foundry Plus (option 287-3)** **For robots with with protection type Clean Room** **For robots with food grade lubrication** Check the gasket of the cable housing cover. Replace if damaged.	Gasket on cable housing cover: 3HAC056724-001 PTFE film on cable housing cover: 3HAC044660-001 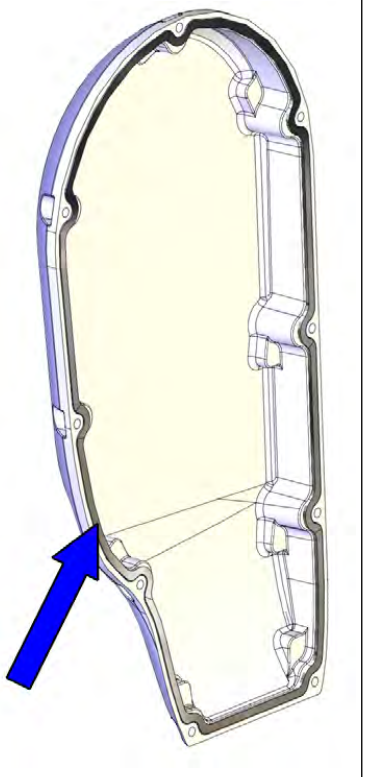 xx1400000048
11	Check the PTFE film on the cable housing cover. Replace if damaged.	
12	Apply grease to the inner surface of the cable housing cover and the PTFE film surface.	

Continues on next page

© Copyright 2014 - 2017 ABB. All rights reserved.

4.3.1 Replacing the main cable package

Continued

	Action	Note
13	Refit the cable housing cover.	Screws: 3HAB3409-207 (M3x8). Tightening torque: 1.5 Nm 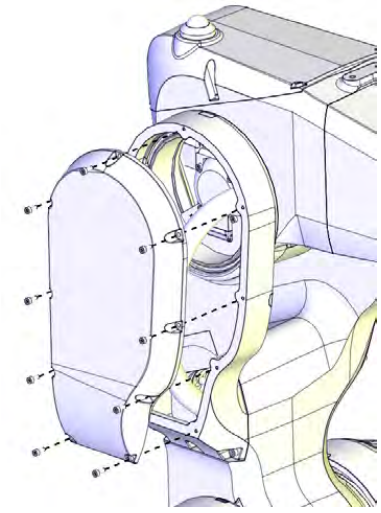 xx1300002400 **Note** Only use specified screws, never replace them with other screws.
14	Clean Room robots: seal and paint the joints that have been opened. See *Replacing parts on the robot on page 138* **Note** After all repair work, wipe the robot free from particles with spirit on a lint free cloth.	

Connecting the air hoses and CP/CS cabling (if equipped)

	Action	Note
1	Reconnect the air hoses.	Air connector set with Ethernet hole in flange: 3HAC049664-001 Air connector set without Ethernet hole in flange: 3HAC049665-001 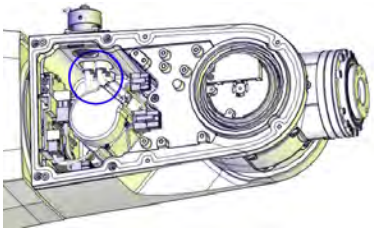 xx1400000738

Continues on next page

© Copyright 2014 - 2017 ABB. All rights reserved.

	Action	Note
2	If equipped, reconnect the CP/CS connector. **For robots with protection class IP67 (option 287-10)** **For robots with protection type Foundry Plus (option 287-3)** 1 Check the gasket. 2 Replace if damaged. **For robots with protection type Clean Room:** 1 Remove residual locking liquid and other pollutants with cleaning agent Loctite 7063. 2 Apply flange sealing Loctite 574 on the mounting surfaces of the CP/CS connector and wipe clean if there is any overflowing Loctite 574.	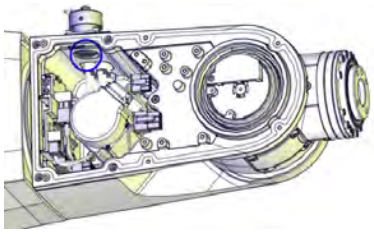 xx1500000252 On robots with protection class IP67 On robots with protection type Foundry Plus Gasket: 3HAC058567-001 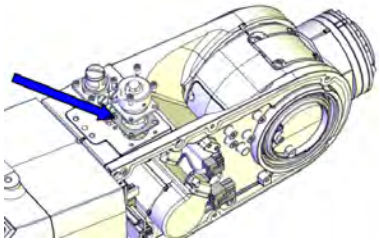 xx1500000251
3	**For robots with protection type Foundry Plus** If required, fit the protection bracket for CP/CS connectors.	Protection bracket for CP/CS connectors: 3HAC058350-001 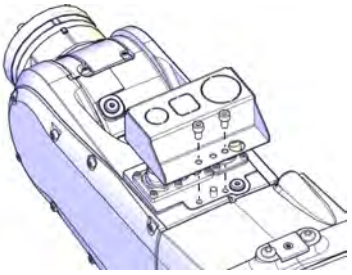 xx1600001152

Connecting the axis-5 motor FPC connectors

	Action	Note
1	Connect the axis-5 FPC connectors and snap them to their holders.	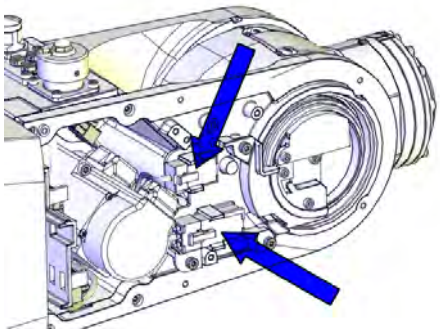 xx1300002390

Continues on next page

© Copyright 2014 - 2017 ABB. All rights reserved.

4.3.1 Replacing the main cable package

Continued

Connecting the axis-5 motor connectors

	Action	Note
1	Reconnect the motor cables. • R3.MP5 • R3.ME5	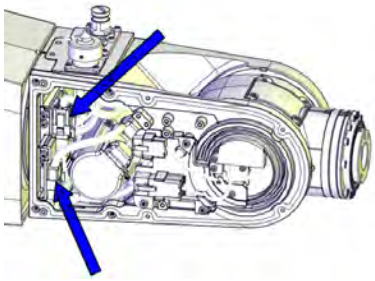 xx1300002360

Refitting the wrist covers

	Action	Note
1	Clean Room robots: clean the joints that have been opened. See *Replacing parts on the robot on page 138*	
2	**For robots with protection class IP67 (option 287-10)** **For robots with protection type Foundry Plus (option 287-3)** **For robots with with protection type Clean Room** **For robots with food grade lubrication** Check the tubular cover gasket. Replace if damaged.	Gasket for tubular cover: 3HAC058822-001 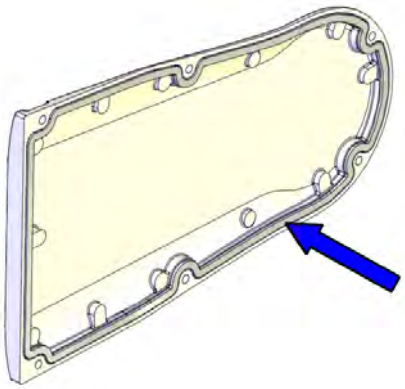 xx1400000034
3	**For robots with protection class IP67 (option 287-10)** **For robots with protection type Foundry Plus (option 287-3)** **For robots with with protection type Clean Room** **For robots with food grade lubrication** Check the tubular cable housing cover gasket. Replace if damaged.	Gasket for tubular cable housing cover: 3HAC056707-001 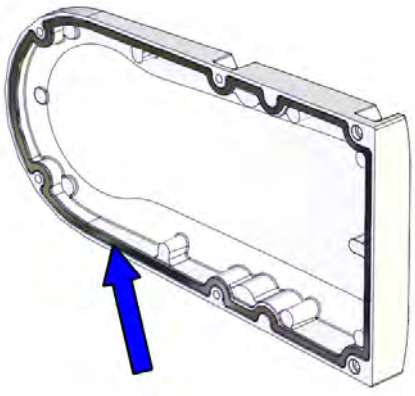 xx1400000345

Continues on next page

© Copyright 2014 - 2017 ABB. All rights reserved.

	Action	Note
4	Refit the both covers to the wrist. **For robots with protection class IP67 (option 287-10)** **For robots with protection type Foundry Plus (option 287-3)** Apply locking liquid Loctite 243 to the two front screws on the left hand side cover, encircled in the figure. Remember to refit the extra two screws and washers to the tubular cover. **For robots with protection type Clean Room** Remember to refit the extra two screws and washers to the tubular cover.	Screws: 3HAB3409-207 (M3x8). Tightening torque: 1.5 Nm. For robots with protection class IP67 (option 287-10) For robots with protection type Foundry Plus (option 287-3) 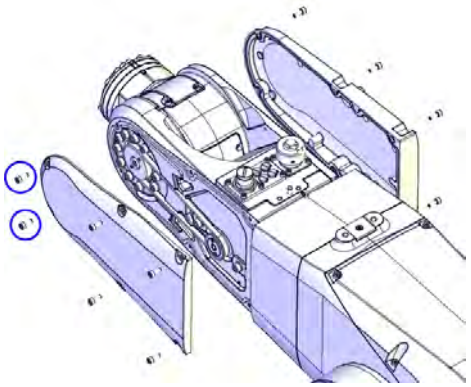 xx1300002349 For robots with protection type Clean Room 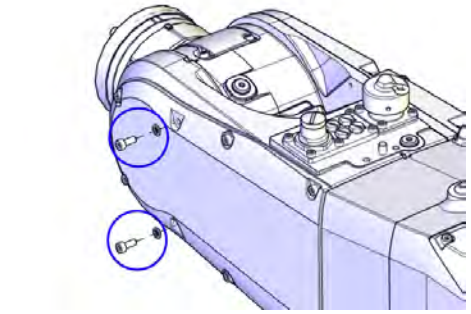 xx1600001153 **Note** Only use specified screws, never replace them with other screws.
5	Clean Room robots: seal and paint the joints that have been opened. See *Replacing parts on the robot on page 138* **Note** After all repair work, wipe the robot free from particles with spirit on a lint free cloth.	

Continues on next page

© Copyright 2014 - 2017 ABB. All rights reserved.

4.3.1 Replacing the main cable package

Continued

Concluding procedure

	Action	Note
1	**For robots with protection class IP67 (option 287-10)** **For robots with protection type Foundry Plus (option 287-3)** **For robots with with protection type Clean Room** **For robots with food grade lubrication** Check the gasket. Replace if damaged.	Housing cover gasket (IRB 1200-7/0.7): 3HAC056698-001 Housing cover gasket (IRB 1200-5/0.9): 3HAC056697-001 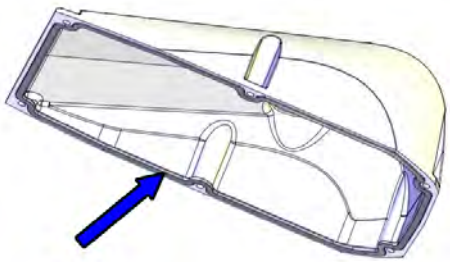 xx1400000477
2	Refit the upper arm housing cover with the screws. **CAUTION** **For robots with safety lamp (option)** Reconnect the lamp cable connectors R3.H1 and R3.H2 and then secure the cover.	Screws: 3HAB3409-207 (M3x8). Tightening torque: 1.5 Nm. 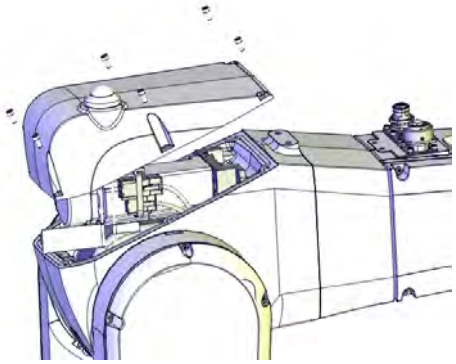 xx1300000456 **Note** Only use specified screws, never replace them with other screws.
3	**For robots with protection type Clean Room** Apply a string of the sealant Sikaflex 521FC to the joint of the upper arm housing cover. Smooth out the sealant string using a finger tip. Use washing-up on finger tips to get a smooth joint. If necessary, add extra sealant to get a full cover joint.	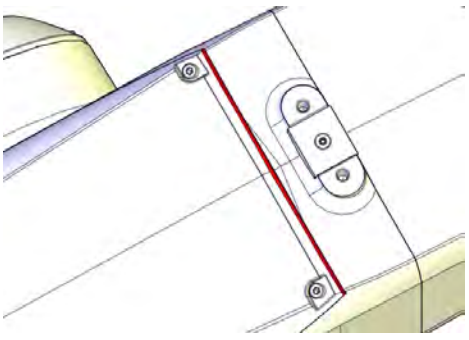 xx1600000215

Continues on next page

© Copyright 2014 - 2017 ABB. All rights reserved.

	Action	Note
4	For robots with protection type Clean Room: Clean and paint the joints that have been opened. See *Replacing parts on the robot on page 138* **Note** After all repair work, wipe the Clean Room robot free from particles with spirit on a lint free cloth.	
5	Recalibrate the robot.	Calibration is detailed in section *Calibration on page 733*.
6	**DANGER** Make sure all safety requirements are met when performing the first test run. These are further detailed in the section *DANGER - First test run may cause injury or damage! on page 48*.	

© Copyright 2014 - 2017 ABB. All rights reserved.

4.3.2 Replacing the axis-4 FPC unit, housing extender unit and housing extender sealings

Location of the FPC unit

The axis-4 FPC unit and the housing extender sealings are located inside the housing extender unit, as shown in the figure.

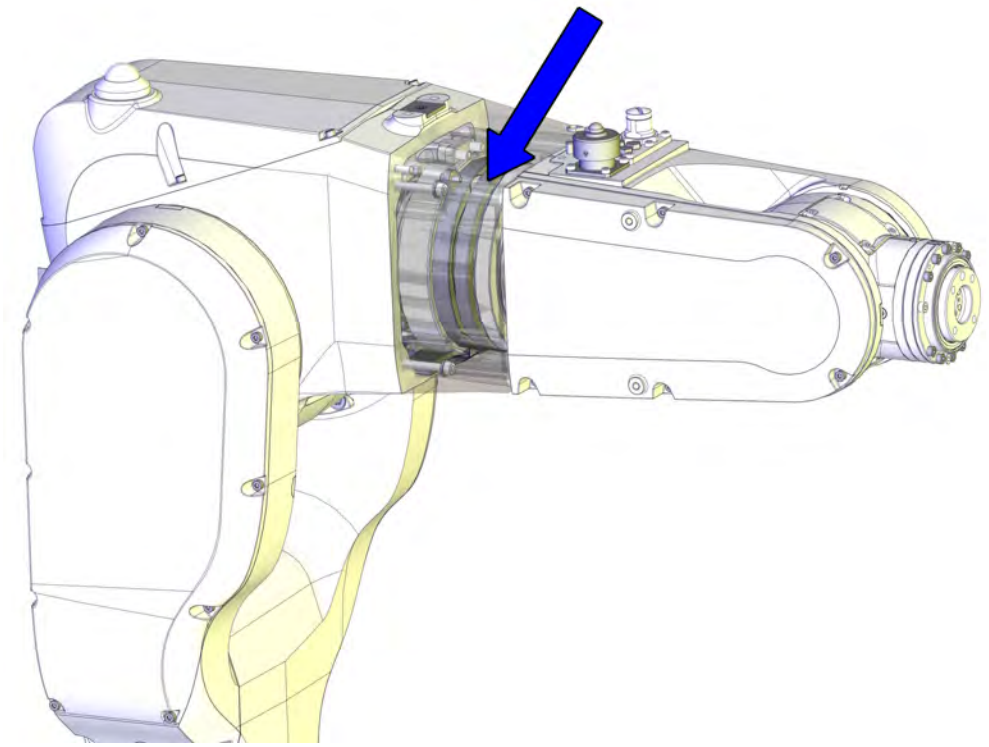

xx1300002419

Required spare parts

Note

The spare part numbers that are listed in the table can be out of date. See the latest revision of *Product manual, spare parts - IRB 1200* on ABB Library.

Spare part	Article number	Note
FPC unit, axis 4	3HAC055517-001	
Radial sealing with dust lip	3HAB3701-48	Not used with protection class IP40. Replace if damaged.
M2 variseal sealing	3HAC044641-007	Used with protection class IP67. Used with protection type Foundry Plus. Replace if damaged.
Housing extender unit	3HAC059686-001	Replace if damaged.

Continues on next page

© Copyright 2014 - 2017 ABB. All rights reserved.

Spare part	Article number	Note
Housing extender unit, Clean Room Housing extender unit, food grade lubrication	3HAC059703-001	Used with protection type Clean Room. Used for robots with food grade lubrication. Replace if damaged.
Gasket on cable housing cover	3HAC056724-001	Not used with protection class IP40. Replace if damaged.
PTFE film on cable housing cover	3HAC044660-001	Replace if damaged.
Washer	3HAC044869-001	Replace if damaged
Housing small cover	3HAC059684-001	Replace if damaged.
Housing small cover, Clean Room Housing small cover, food grade lubrication	3HAC056142-001	Used with protection type Clean Room. Used for robots with food grade lubrication. Replace if damaged.
Gasket for tubular cover	3HAC058822-001	Not used with protection class IP40. Replace if damaged.
Gasket for tubular cable housing cover	3HAC056707-001	Not used with protection class IP40. Replace if damaged.

Required tools and equipment

Equipment, etc.	Article number	Note
Axis-4 sealing assembly tool set	3HAC049699-001	Used to refit the radial sealing, if replacement is needed.
24 VDC power supply	-	Used to release the motor brakes.
Standard toolkit	-	Content is defined in section *Standard toolkit on page 808*.

Required consumables

Consumable	Art. no.	Note
Cleaning agent	-	Loctite 7063
Flange sealing	12340011-116	Loctite 574 For robots with protection class IP67 (option 287-10) For robots with protection type Foundry Plus (option 287-3)
Locking liquid	3HAB7116-1	Loctite 243
Sealant	3HAC026759-001	Sikaflex 521FC For robots with protection type Clean Room

Continues on next page

© Copyright 2014 - 2017 ABB. All rights reserved.

4.3.2 Replacing the axis-4 FPC unit, housing extender unit and housing extender sealings
Continued

Deciding calibration routine

Decide which calibration routine to be used, based on the information in the table. Depending on which routine is chosen, action might be required prior to beginning the repair work of the robot, see the table.

	Action	Note
1	Decide which calibration routine to use for calibrating the robot. • Reference calibration. External cable packages (DressPack) and tools can stay fitted on the robot. • Fine calibration. All external cable packages (DressPack) and tools must be removed from the robot.	**Note** Calibrating axis 6 always requires tools to be removed from the mounting flange (also for reference calibration) since the mounting flange is used for installation of the calibration tool.
	If the robot is to be calibrated with reference calibration: Find previous reference values for the axis or create new reference values. These values are to be used after the repair procedure is completed, for calibration of the robot. If no previous reference values exist, and no new reference values can be created, then reference calibration is not possible.	Follow the instructions given in the reference calibration routine on the FlexPendant to create reference values. Creating new values requires possibility to move the robot. Read more about reference calibration for Axis Calibration in *Reference calibration routine on page 743*.
	If the robot is to be calibrated with fine calibration: Remove all external cable packages (DressPack) and tools from the robot.	

Removing the FPC unit and the housing extender sealings

Use these procedures to remove the axis-4 FPC unit and the housing extender sealings.

Preparations before removing the axis-4 FPC unit

	Action	Note
1	Decide which calibration routine to use, and take actions accordingly prior to beginning the repair procedure.	
2	Jog axis 4 to zero position.	
3	**DANGER** Turn off all: • electric power supply • hydraulic pressure supply • air pressure supply to the robot, before entering the robot working area.	

Continues on next page

© Copyright 2014 - 2017 ABB. All rights reserved.

Getting access to inside of the wrist unit

	Action	Note
1	**DANGER** Make sure that all supplies for electrical power, hydraulic pressure, and air pressure are turned off.	
2	**CAUTION** For robots with protection type Clean Room: Always cut the paint with a knife and grind the paint edge when disassembling parts of the robot! See *Replacing parts on the robot on page 138*	
3	Remove the covers on each side of the wrist by removing their screws. **Note** **For robots with protection class IP67 (option 287-10)** **For robots with protection type Foundry Plus (option 287-3)** The two front screws on the left hand side cover (encircled in the figure) have been fitted with locking liquid. The tubular cover (left hand side cover) has two extra screws and washers, as encircled in the figure. **Note** **For robots with protection type Clean Room** The tubular cover (left hand side cover) has two extra screws and washers, as encircled in the figure.	For robots with protection class IP67 (option 287-10) For robots with protection type Foundry Plus (option 287-3) 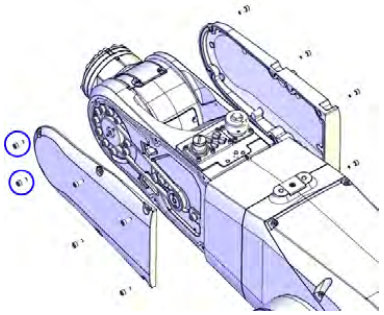 xx1300002349 For robots with protection type Clean Room 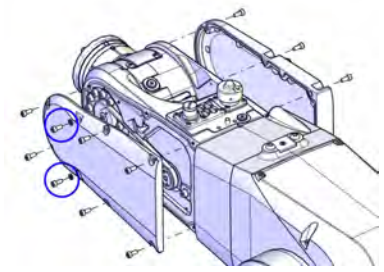 xx1600001148

Disconnecting the axis-5 motor connectors

	Action	Note
1	**DANGER** Make sure that all supplies for electrical power, hydraulic pressure, and air pressure are turned off.	

Continues on next page

© Copyright 2014 - 2017 ABB. All rights reserved.

4.3.2 Replacing the axis-4 FPC unit, housing extender unit and housing extender sealings
Continued

	Action	Note
2	Snap loose the motor connectors from their holders and then disconnect them. • R3.MP5 • R3.ME5 **Tip** Take photos of the connector and cable position before disconnecting them, to have as a reference when reconnecting.	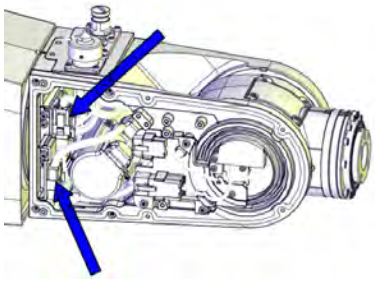 xx1300002360

Removing the axis-5 motor with pulley

	Action	Note
1	**DANGER** Make sure that all supplies for electrical power, hydraulic pressure, and air pressure are turned off.	
2	**CAUTION** For robots with protection type Clean Room: Always cut the paint with a knife and grind the paint edge when disassembling parts of the robot! See *Replacing parts on the robot on page 138*	
3	Loosen the screws so that the motor can be moved sideways.	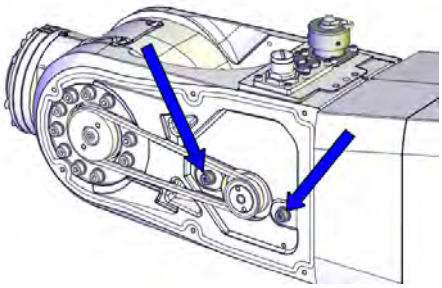 xx1300002350
4	Remove the timing belt.	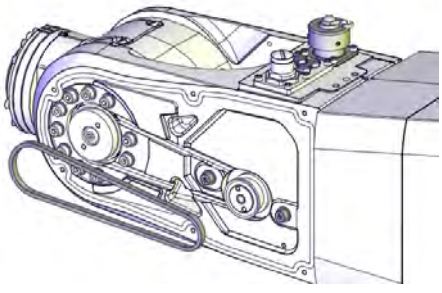 xx1300002351

Continues on next page

© Copyright 2014 - 2017 ABB. All rights reserved.

	Action	Note
5	Snap loose and disconnect the axis-5 FPC connectors.	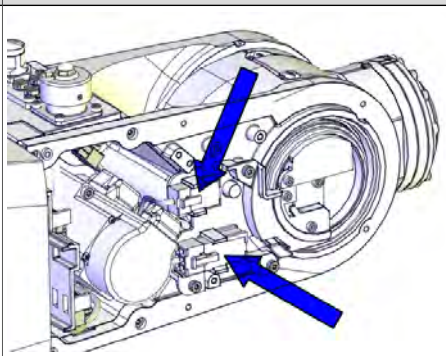 xx1300002390
6	Remove the screws and pull out the motor.	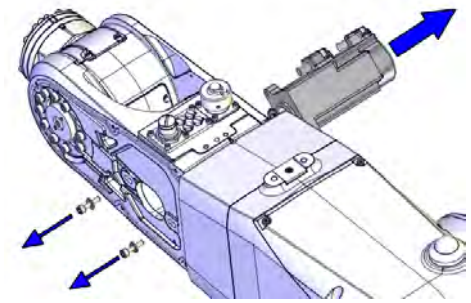 xx1300002352

Removing the wrist

	Action	Note
1	**DANGER** Make sure that all supplies for electrical power, hydraulic pressure, and air pressure are turned off.	
2	**CAUTION** For robots with protection type Clean Room: Always cut the paint with a knife and grind the paint edge when disassembling parts of the robot! See *Replacing parts on the robot on page 138*	
3	Disconnect the connectors shown in the figure.	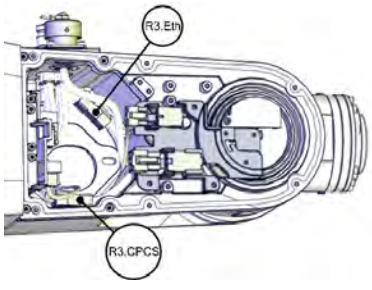 xx1300002353

Continues on next page

© Copyright 2014 - 2017 ABB. All rights reserved.

4.3.2 Replacing the axis-4 FPC unit, housing extender unit and housing extender sealings

Continued

	Action	Note
4	Disconnect the air hoses.	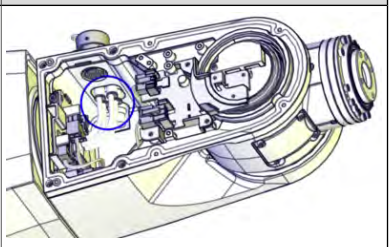 xx1300002355
5	Remove the connector plate attachment screws.	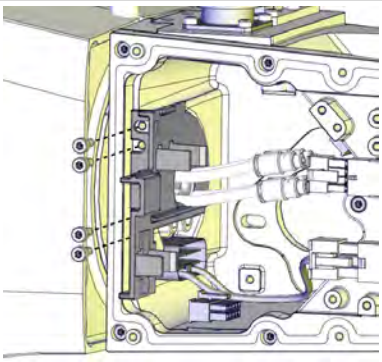 xx1300002356
6	Guide the hoses through the plate hole and remove the plate.	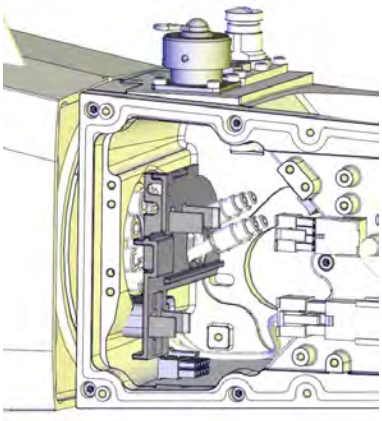 xx1300002357
7	Support the weight of the wrist and remove the screws and the washer.	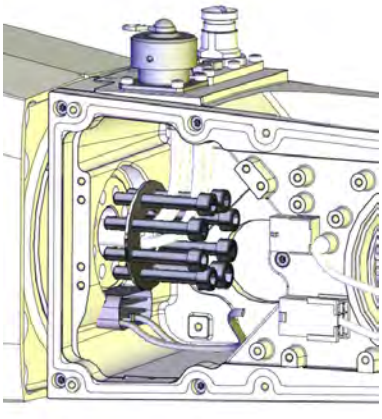 xx1300002358

Continues on next page

© Copyright 2014 - 2017 ABB. All rights reserved.

	Action	Note
8	Pull out the wrist carefully while at the same time pulling all connectors and the air hoses out of the wrist. Be careful not to damage the FPC cabling and the connectors. **CAUTION** Pay special attention to the plastic block on the FPC unit. It is easily pulled off, make sure it stays fitted to the FPC unit. 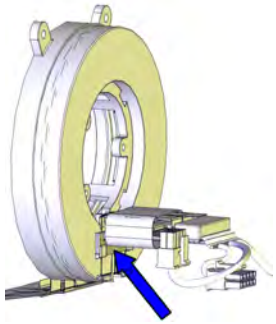 xx1300002611	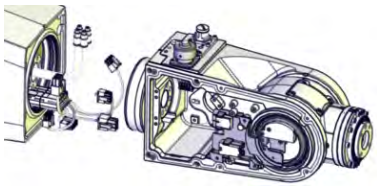 xx1300002359

Disconnecting the axis-4 FPC connectors

	Action	Note
1	**DANGER** Make sure that all supplies for electrical power, hydraulic pressure, and air pressure are turned off.	
2	**CAUTION** For robots with protection type Clean Room: Always cut the paint with a knife and grind the paint edge when disassembling parts of the robot! See *Replacing parts on the robot on page 138*	

Continues on next page

© Copyright 2014 - 2017 ABB. All rights reserved.

4.3.2 Replacing the axis-4 FPC unit, housing extender unit and housing extender sealings
Continued

	Action	Note
3	Remove the cable housing cover.	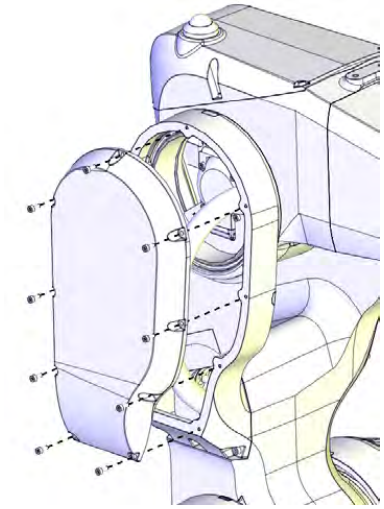 xx1300002400
4	Remove the plate.	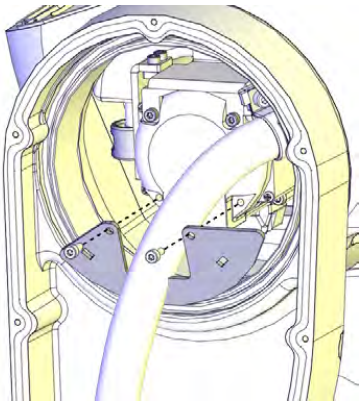 xx1300002413

Continues on next page

© Copyright 2014 - 2017 ABB. All rights reserved.

	Action	Note
5	Pull out the FPC connectors from the housing and disconnect them.	Cable layout in IRB 1200-7/0.7 : 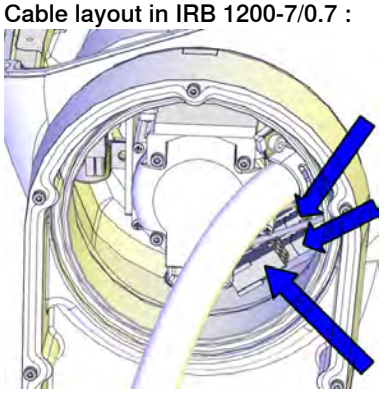 xx1300002412 Cable layout in IRB 1200-5/0.9 : 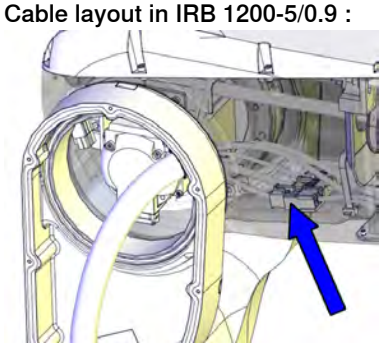 xx1400001471
6	Remove the small cover of the housing.	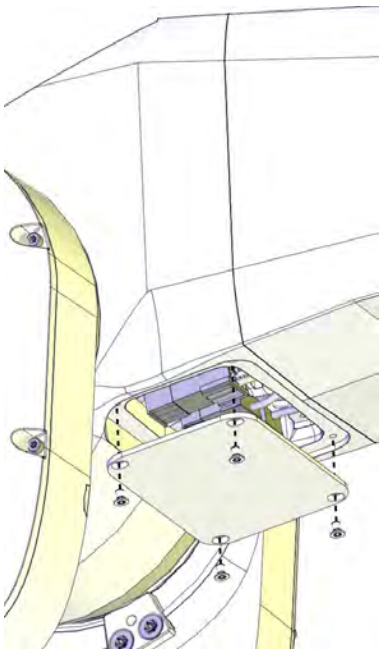 xx1300002398

Continues on next page

© Copyright 2014 - 2017 ABB. All rights reserved.

4.3.2 Replacing the axis-4 FPC unit, housing extender unit and housing extender sealings
Continued

	Action	Note
7	Disconnect the remaining FPC connectors.	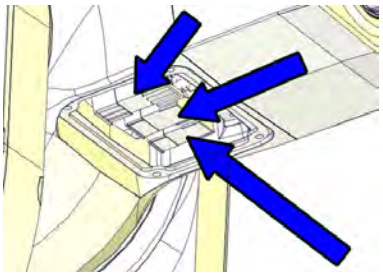 xx1300002399

Removing the housing extender unit

	Action	Note
1	**CAUTION** For robots with protection type Clean Room: Always cut the paint with a knife and grind the paint edge when disassembling parts of the robot! See *Replacing parts on the robot on page 138*	
2	Remove the axis-4 FPC unit screws.	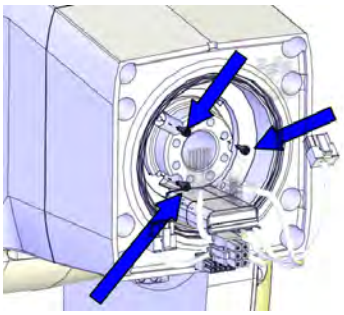 xx1300002373
3	**For robots with protection type Clean Room** **For robots with protection type Foundry Plus** Remove the plugs covering the extender unit screws with a needle-nose plier.	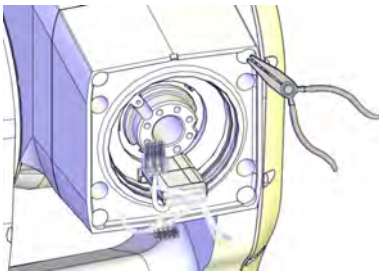 xx1600000262
4	Remove the extender unit screws.	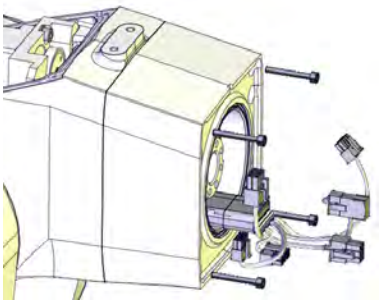 xx1300002372

Continues on next page

© Copyright 2014 - 2017 ABB. All rights reserved.

	Action	Note
5	Remove the housing extender unit. Be careful not to damage the cabling.	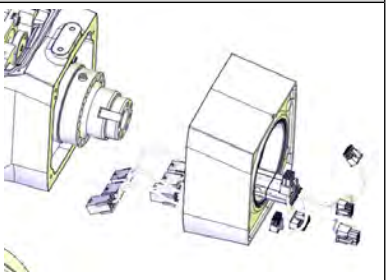 xx1300002374

Removing the axis-4 mechanical stop

	Action	Note
1	**CAUTION** For robots with protection type Clean Room: Always cut the paint with a knife and grind the paint edge when disassembling parts of the robot! See *Replacing parts on the robot on page 138*	
2	Remove the mechanical stop assembly from the housing extender unit by removing the screws.	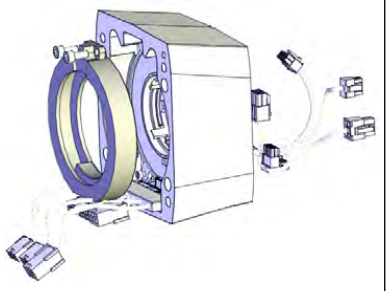 xx1300002415

Removing the axis-4 FPC unit

	Action	Note
1	**CAUTION** For robots with protection type Clean Room: Always cut the paint with a knife and grind the paint edge when disassembling parts of the robot! See *Replacing parts on the robot on page 138*	

Continues on next page

© Copyright 2014 - 2017 ABB. All rights reserved.

4.3.2 Replacing the axis-4 FPC unit, housing extender unit and housing extender sealings
Continued

	Action	Note
2	Remove the FPC unit from the housing extender unit by removing the screws. **CAUTION** The lower screw, highlighted with a ring in the figure, is very closely located to the cabling. Be careful not to damage the cabling with the screwdriver when removing/refitting the screw.	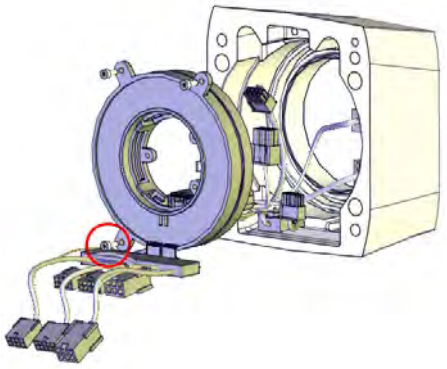 xx1300002417

Refitting the FPC unit and the housing extender sealings

Use these procedures to refit the FPC unit and the housing extender sealings.

Checking the housing extender sealings

	Action	Note
1	Clean Room robots: clean the joints that have been opened. See *Replacing parts on the robot on page 138*	
2	**For robots with protection class IP67 (option 287-10)** **For robots with protection type Foundry Plus (option 287-3)** Check the sealing. Replace if damaged. **CAUTION** Do not fit M2 variseal sealing on Clean Room robots.	M2 variseal sealing: 3HAC044641-007 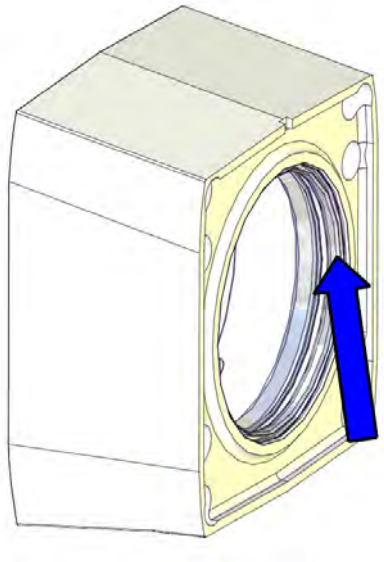 xx1300002418

Continues on next page

© Copyright 2014 - 2017 ABB. All rights reserved.

	Action	Note
3	**For robots with protection class IP67 (option 287-10)** **For robots with protection type Foundry Plus (option 287-3)** **For robots with with protection type Clean Room** **For robots with food grade lubrication** Check the radial sealing. Replace if damaged, as described below. In order to replace the radial sealing, both the axis-4 mechanical stop and the axis-4 FPC unit must be removed from the housing extender unit, if not already removed.	Radial sealing with dust lip: 3HAB3701-48 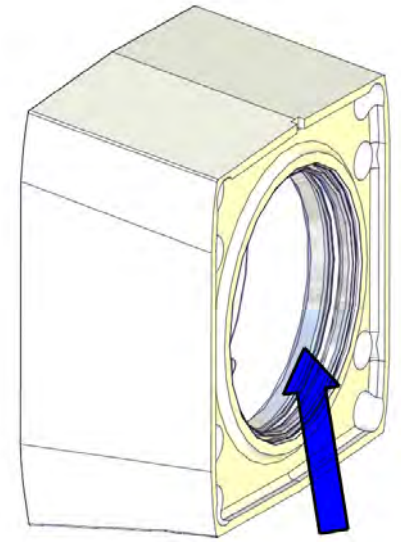 xx1400000438
4	**For robots with protection type Clean Room** Apply a little grease to the sealing when replacing the radial sealing and wipe clean after the replacement.	
5	Fit the radial sealing into the housing extender unit.	
6	Fit the circular part of the radial sealing assembly tool against the radial sealing.	Axis-4 sealing assembly tool set: 3HAC049699-001
7	Fit the tool plate to the other side of the housing extender unit with the six screws M6X50.	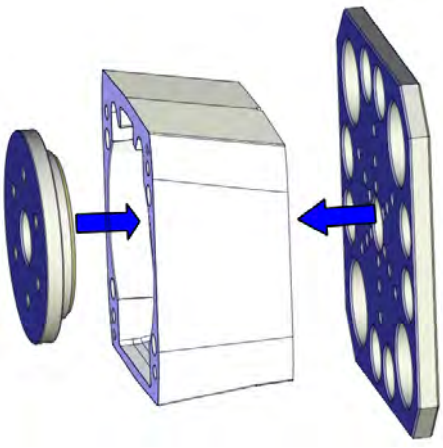 xx1400000436

Continues on next page

© Copyright 2014 - 2017 ABB. All rights reserved.

4.3.2 Replacing the axis-4 FPC unit, housing extender unit and housing extender sealings
Continued

	Action	Note
8	Screw the screws, little by little, to press the sealing into place.	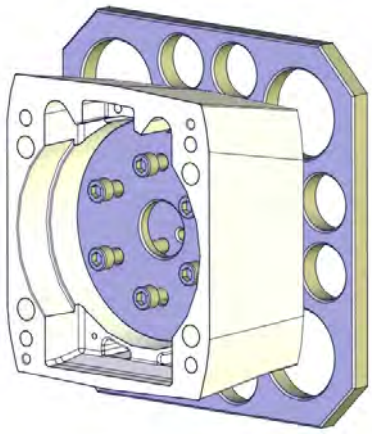 xx1400000437
9	Remove the assembly tool.	
10	Check that the sealing is undamaged and properly fitted.	
11	Refit both the axis-4 mechanical stop and the axis-4 FPC unit to the housing extender unit.	
12	Clean Room robots: seal and paint the joints that have been opened. See *Replacing parts on the robot on page 138* **Note** After all repair work, wipe the robot free from particles with spirit on a lint free cloth.	

Refitting the axis-4 FPC unit

	Action	Note
1	Clean Room robots: clean the joints that have been opened. See *Replacing parts on the robot on page 138*	

Continues on next page

© Copyright 2014 - 2017 ABB. All rights reserved.

	Action	Note
2	Refit the FPC unit to the housing extender unit and secure with the screws. **CAUTION** The lower screw, highlighted with a ring in the figure, is very closely located to the cabling. Be careful not to damage the cabling with the screwdriver when removing/refitting the screw. **CAUTION** Pay special attention to the plastic block on the FPC unit. It is easily pulled off, make sure it stays fitted to the FPC unit. 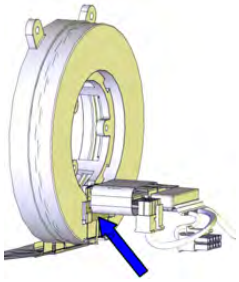 xx1300002611	Tightening torque: 0.5 Nm. 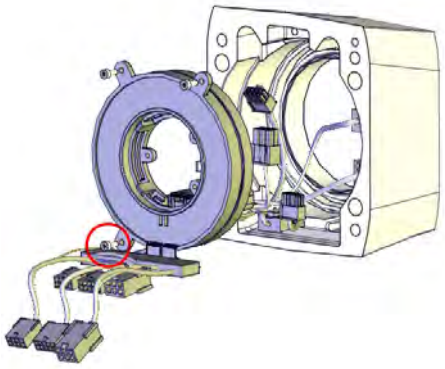 xx1300002417
3	Clean Room robots: seal and paint the joints that have been opened. See *Replacing parts on the robot on page 138* **Note** After all repair work, wipe the robot free from particles with spirit on a lint free cloth.	

Refitting the housing extender unit

	Action	Note
1	Clean Room robots: clean the joints that have been opened. See *Replacing parts on the robot on page 138*	
2	**For robots with protection class IP67 (option 287-10)** **For robots with protection type Foundry Plus (option 287-3)** Remove residual locking liquid and other pollutants with cleaning agent Loctite 7063. Apply flange sealing Loctite 574 on the mounting surfaces of the housing extender unit. **Note** For Clean Room robots, wipe clean the overflowing Loctite 574 if there is any.	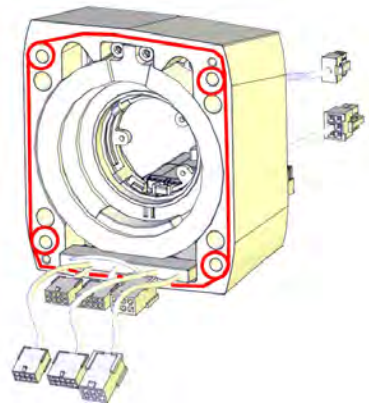 xx1300002613

Continues on next page

© Copyright 2014 - 2017 ABB. All rights reserved.

4.3.2 Replacing the axis-4 FPC unit, housing extender unit and housing extender sealings

Continued

	Action	Note
3	**For robots with protection type Clean Room** **For robots with protection type Foundry Plus** Make sure the four cavities are fully filled with glue. If not, fill glue again before the refitting.	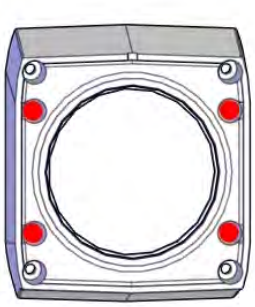 xx1600000216
4	Refit the housing extender unit to the housing while putting the FPC cables into the housing and the air hoses through the housing extender unit. Be careful not to damage the cabling. **CAUTION** Make sure that the axis-4 FPC unit is in its zero position when refitting the housing extender unit. **Note** Mate the unit to the two locating pins attached to the housing.	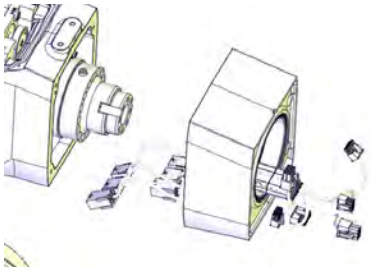 xx1300002374
5	Secure with screws and washers, using locking liquid Loctite 243.	Screws: M4x30. Tightening torque: 2.7 Nm. 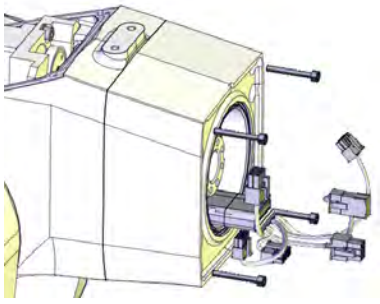 xx1300002372
6	**For robots with protection type Foundry Plus (option 287-3)** **For robots with protection type Clean Room** **For robots with food grade lubrication** Press in screw sealing plugs to cover the screws.	Screw sealing plug: 3HAC053685-001 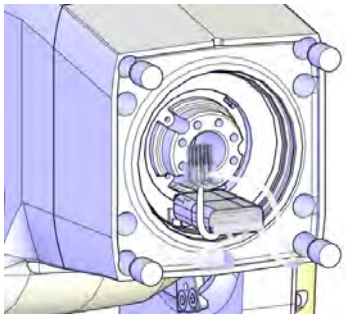 xx1600000263

Continues on next page

© Copyright 2014 - 2017 ABB. All rights reserved.

	Action	Note
7	Fit and secure the axis-4 FPC unit screws.	Tightening torque: 0.3 Nm. 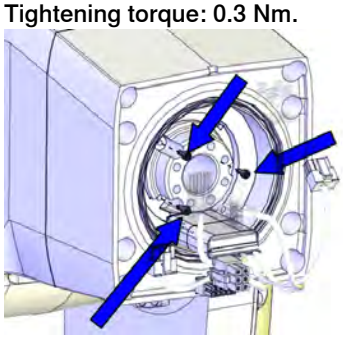 xx1300002373
8	Clean Room robots: seal and paint the joints that have been opened. See *Replacing parts on the robot on page 138* **Note** After all repair work, wipe the robot free from particles with spirit on a lint free cloth.	

Connecting the axis-4 FPC connectors

	Action	Note
1	Clean Room robots: clean the joints that have been opened. See *Replacing parts on the robot on page 138*	
2	Reconnect the FPC connectors. **Tip** See the number markings on the connectors for help to find the corresponding connector.	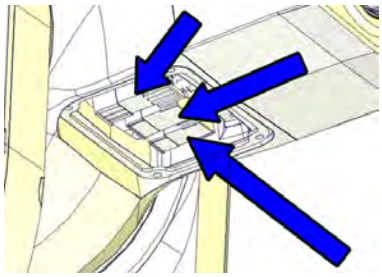 xx1300002399

Continues on next page

© Copyright 2014 - 2017 ABB. All rights reserved.

4.3.2 Replacing the axis-4 FPC unit, housing extender unit and housing extender sealings
Continued

	Action	Note
3	Reconnect the FPC connectors and push them into place inside the housing. **Tip** See the number markings on the connectors for help to find the corresponding connector.	Cable layout in IRB 1200-7/0.7 : 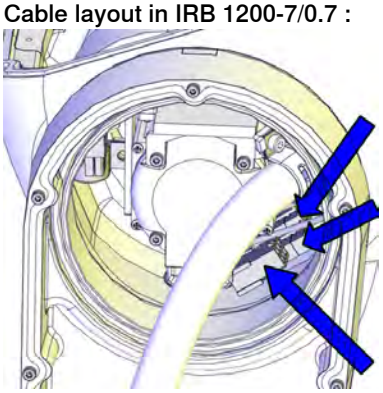 xx1300002412 Cable layout in IRB 1200-5/0.9 : 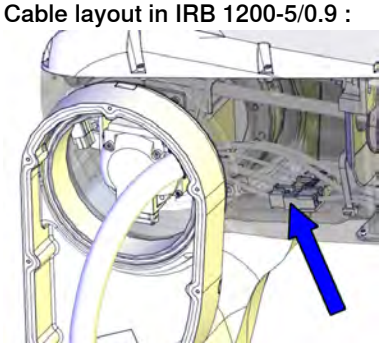 xx1400001471
4	Remove residual locking liquid and other pollutants with cleaning agent Loctite 7063.	

Continues on next page

© Copyright 2014 - 2017 ABB. All rights reserved.

	Action	Note
5	**For robots with protection class IP67 (option 287-10)** **For robots with protection type Foundry Plus (option 287-3)** Apply flange sealing Sikaflex 521FC on the mounting surfaces of the small cover on the housing.	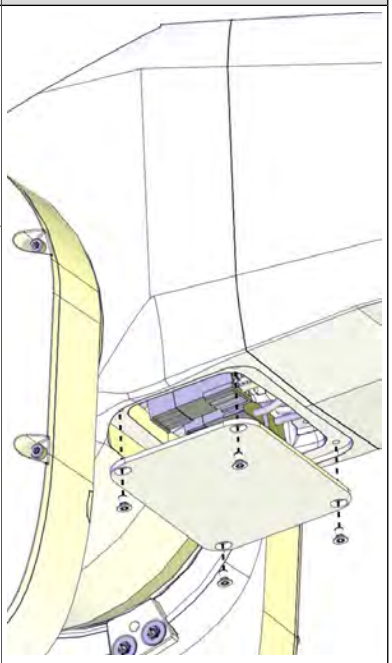 xx1300002398 Housing small cover: 3HAC059684-001 : 3HAC056142-001 (used with protection type Clean Room) Housing small cover, Clean Room Housing small cover, food grade lubrication Screws: 3HAC14286-4 (M3X5). Tightening torque: 1 Nm.
6	Refit the small cover to the housing. Replace if damaged.	
7	**For robots with protection type Clean Room** Apply a string of the sealant Sikaflex 521FC to the joint of the small cover on the housing. Smooth out the sealant string using a finger tip. Use washing-up on finger tips to get a smooth joint. If necessary, add extra sealant to get a full cover joint.	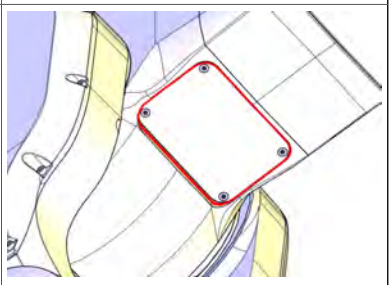 xx1600000214

Continues on next page

© Copyright 2014 - 2017 ABB. All rights reserved.

4.3.2 Replacing the axis-4 FPC unit, housing extender unit and housing extender sealings
Continued

	Action	Note
8	Refit the plate.	Tightening torque: 1.5 Nm. 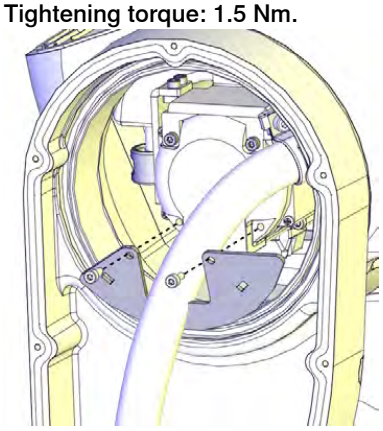 xx1300002413
9	Check the PTFE film on the cable housing. Replace if damaged.	PTFE film on lower arm cable housing: 3HAC044710-001 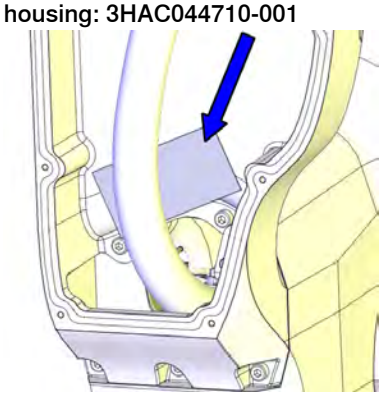 xx1400000740

Continues on next page

© Copyright 2014 - 2017 ABB. All rights reserved.

4.3.2 Replacing the axis-4 FPC unit, housing extender unit and housing extender sealings
Continued

	Action	Note
10	**For robots with protection class IP67 (option 287-10)** **For robots with protection type Foundry Plus (option 287-3)** **For robots with with protection type Clean Room** **For robots with food grade lubrication** Check the gasket of the cable housing cover. Replace if damaged.	Gasket on cable housing cover: 3HAC056724-001 PTFE film on cable housing cover: 3HAC044660-001 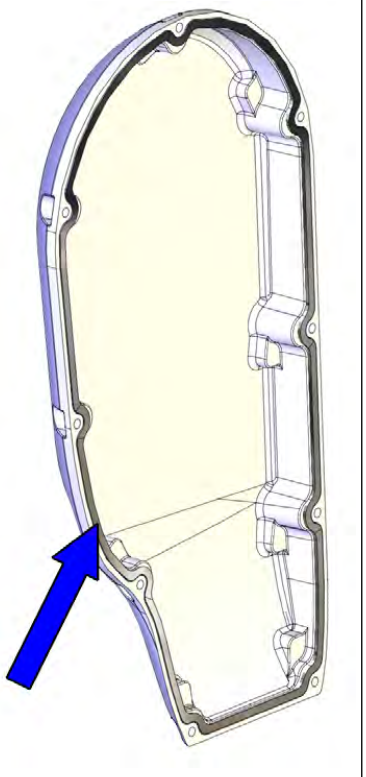 xx1400000048
11	Check the PTFE film on the cable housing cover. Replace if damaged.	
12	Apply grease to the inner surface of the cable housing cover and the PTFE film surface.	

Continues on next page

© Copyright 2014 - 2017 ABB. All rights reserved.

4.3.2 Replacing the axis-4 FPC unit, housing extender unit and housing extender sealings
Continued

	Action	Note
13	Refit the cable housing cover.	Screws: 3HAB3409-207 (M3x8). Tightening torque: 1.5 Nm 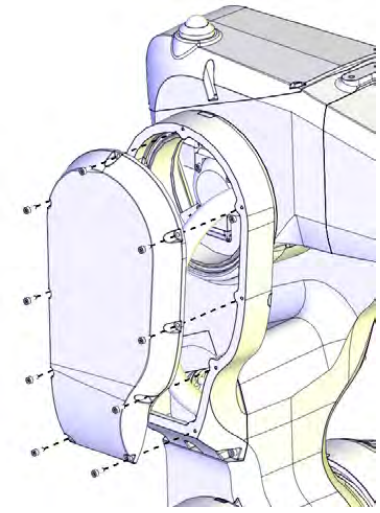 xx1300002400 **Note** Only use specified screws, never replace them with other screws.
14	Clean Room robots: seal and paint the joints that have been opened. See *Replacing parts on the robot on page 138* **Note** After all repair work, wipe the robot free from particles with spirit on a lint free cloth.	

Refitting the wrist

	Action	Note
1	Clean Room robots: clean the joints that have been opened. See *Replacing parts on the robot on page 138*	

Continues on next page

© Copyright 2014 - 2017 ABB. All rights reserved.

	Action	Note
2	Put the connectors and air hoses into the wrist carefully while at the same time refitting the wrist to the housing extender unit. Be careful not to damage the FPC cabling and the connectors. **CAUTION** Pay special attention to the plastic block on the FPC unit. It is easily pulled off, make sure it stays fitted to the FPC unit. 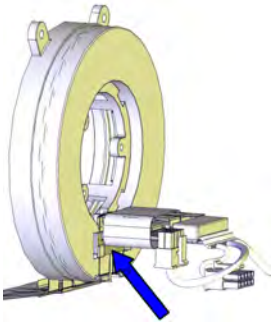 xx1300002611	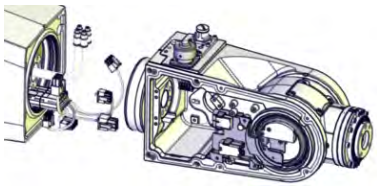 xx1300002359
3	Refit the washer while at the same time putting the cables through its center. Replace washer, if damaged.	Washer: 3HAC044869-001 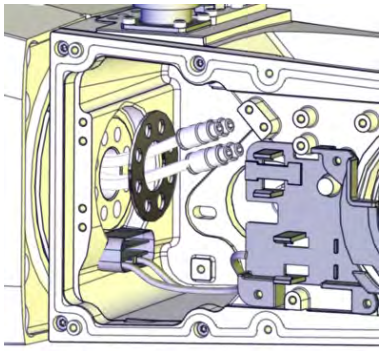 xx1400000001

Continues on next page

© Copyright 2014 - 2017 ABB. All rights reserved.

4.3.2 Replacing the axis-4 FPC unit, housing extender unit and housing extender sealings

Continued

	Action	Note
4	Refit the screw M6x35 (1 pc). Do not tighten yet.	Screw: 3HAB3409-238 (M6x35 (1 pc)). 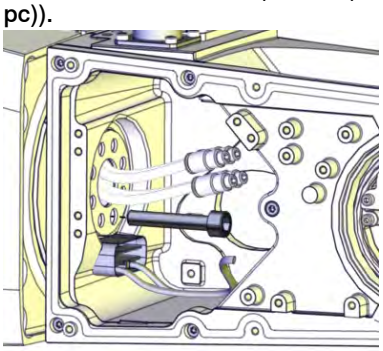 xx1400000002 **Note** Only use specified screws, never replace them with other screws.
5	Refit the rest of the screws (M5x35 (7 pcs)).	Screw: 3HAB3409-237 (M5x35 (7 pcs)). 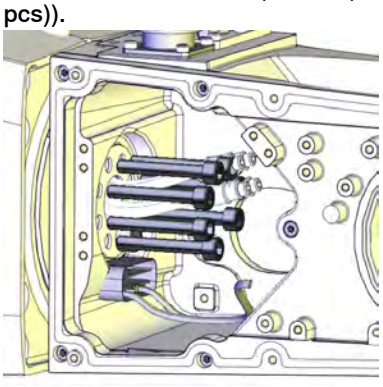 xx1400000003 **Note** Only use specified screws, never replace them with other screws.
6	Tighten all screws.	Tightening torque: 8 Nm.
7	Put the cables through the plate hole and refit the plate.	Tightening torque: 0.3 Nm. 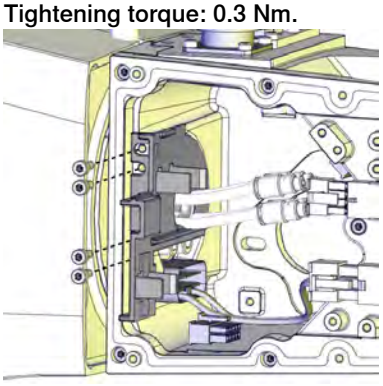 xx1300002356

Continues on next page

© Copyright 2014 - 2017 ABB. All rights reserved.

	Action	Note
8	Reconnect the air hoses. **CAUTION** Make sure to connect the air hoses correctly, according to the marking on hoses and connectors.	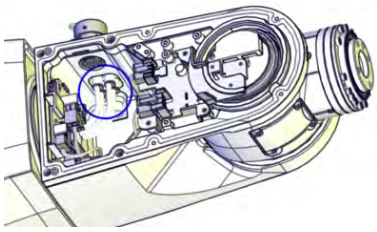 xx1300002355
9	Reconnect the connectors. • R3.Eth • R3.CPCS	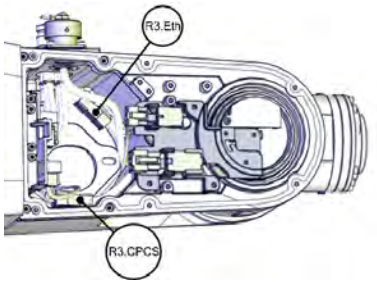 xx1300002353
10	Clean Room robots: seal and paint the joints that have been opened. See *Replacing parts on the robot on page 138* **Note** After all repair work, wipe the robot free from particles with spirit on a lint free cloth.	

Preparations before securing the axis-5 motor

	Action	Note
1	Check that: • all assembly surfaces are clean and without damages • the motor is clean and undamaged.	
2	Place the motor at its mounting position and fasten the attachment screws and washers just enough to still be able to move the motor.	Screws: 3HAB3409-212 (M4x16). 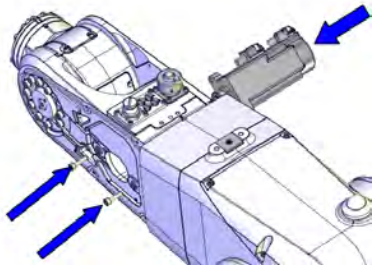 xx1300002463 **Note** Only use specified screws, never replace them with other screws.

Continues on next page

© Copyright 2014 - 2017 ABB. All rights reserved.

4.3.2 Replacing the axis-4 FPC unit, housing extender unit and housing extender sealings
Continued

Securing the axis-5 motor and timing belt

	Action	Note
1	Clean Room robots: clean the joints that have been opened. See *Replacing parts on the robot on page 138*	
2	Refit the timing belt on the pulley.	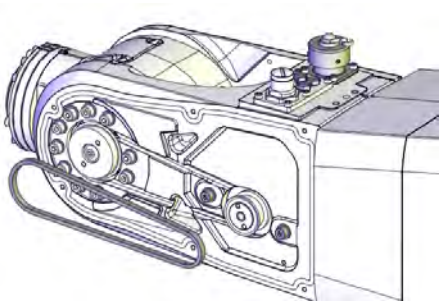 xx1300002351
3	Move the motor to a position where a good timing belt tension is reached (F = 26 N).	**Note** Do not strech the timing belt too much!
4	Secure the motor with its attachment screws.	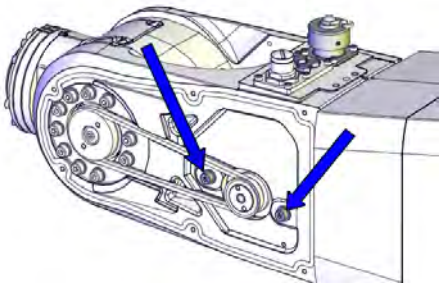 xx1300002350 Tightening torque: 3.5 Nm.
5	Clean Room robots: seal and paint the joints that have been opened. See *Replacing parts on the robot on page 138* **Note** After all repair work, wipe the robot free from particles with spirit on a lint free cloth.	

Continues on next page

© Copyright 2014 - 2017 ABB. All rights reserved.

Connecting the axis-5 motor FPC connectors

	Action	Note
1	Connect the axis-5 FPC connectors and snap them to their holders.	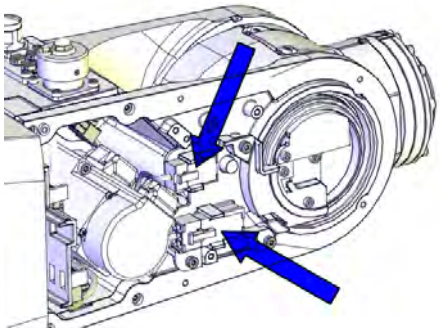 xx1300002390

Connecting the axis-5 motor connectors

	Action	Note
1	Reconnect the motor cables. • R3.MP5 • R3.ME5	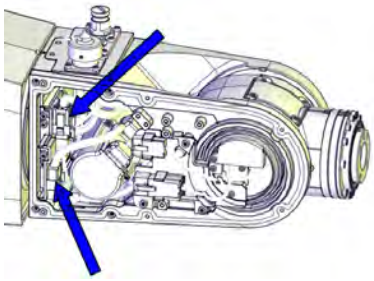 xx1300002360

Refitting the wrist covers

	Action	Note
1	Clean Room robots: clean the joints that have been opened. See *Replacing parts on the robot on page 138*	
2	**For robots with protection class IP67 (option 287-10)** **For robots with protection type Foundry Plus (option 287-3)** **For robots with with protection type Clean Room** **For robots with food grade lubrication** Check the tubular cover gasket. Replace if damaged.	Gasket for tubular cover: 3HAC058822-001 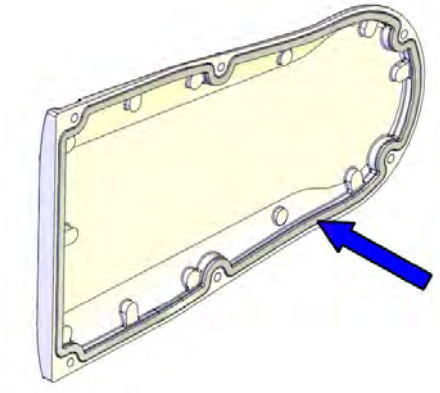 xx1400000034

Continues on next page

© Copyright 2014 - 2017 ABB. All rights reserved.

4.3.2 Replacing the axis-4 FPC unit, housing extender unit and housing extender sealings
Continued

	Action	Note
3	**For robots with protection class IP67 (option 287-10)** **For robots with protection type Foundry Plus (option 287-3)** **For robots with with protection type Clean Room** **For robots with food grade lubrication** Check the tubular cable housing cover gasket. Replace if damaged.	Gasket for tubular cable housing cover: 3HAC056707-001 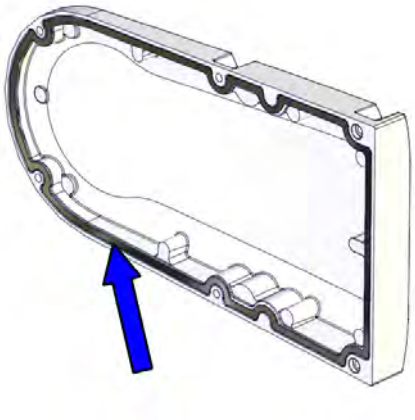 xx1400000345

Continues on next page

© Copyright 2014 - 2017 ABB. All rights reserved.

	Action	Note
4	Refit the both covers to the wrist. **For robots with protection class IP67 (option 287-10)** **For robots with protection type Foundry Plus (option 287-3)** Apply locking liquid Loctite 243 to the two front screws on the left hand side cover, encircled in the figure. Remember to refit the extra two screws and washers to the tubular cover. **For robots with protection type Clean Room** Remember to refit the extra two screws and washers to the tubular cover.	Screws: 3HAB3409-207 (M3x8). Tightening torque: 1.5 Nm. For robots with protection class IP67 (option 287-10) For robots with protection type Foundry Plus (option 287-3) 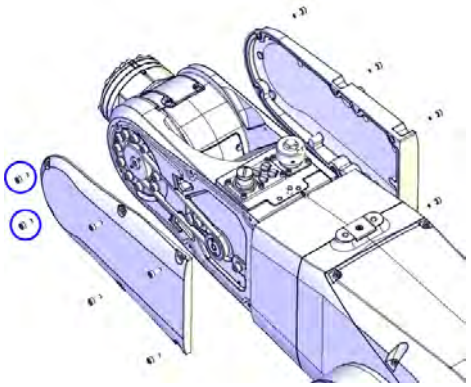 xx1300002349 For robots with protection type Clean Room 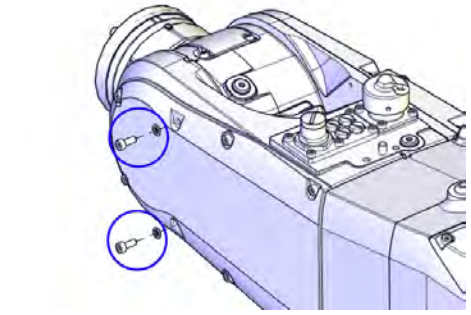 xx1600001153 **Note** Only use specified screws, never replace them with other screws.
5	Clean Room robots: seal and paint the joints that have been opened. See *Replacing parts on the robot on page 138* **Note** After all repair work, wipe the robot free from particles with spirit on a lint free cloth.	

Continues on next page

© Copyright 2014 - 2017 ABB. All rights reserved.

4.3.2 Replacing the axis-4 FPC unit, housing extender unit and housing extender sealings
Continued

Concluding procedure

	Action	Note
1	For robots with protection type Clean Room: Clean and paint the joints that have been opened. See *Replacing parts on the robot on page 138*  **Note** After all repair work, wipe the Clean Room robot free from particles with spirit on a lint free cloth.	
2	Recalibrate the robot.	Calibration information is included in section *Calibration on page 733*.
3	 **DANGER** Make sure all safety requirements are met when performing the first test run. These are further detailed in the section *DANGER - First test run may cause injury or damage! on page 48*.	

© Copyright 2014 - 2017 ABB. All rights reserved.

4.3.3 Replacing the axis-5 FPC unit

Location of axis-5 FPC unit

The axis-5 FPC unit is located as shown in the figure.

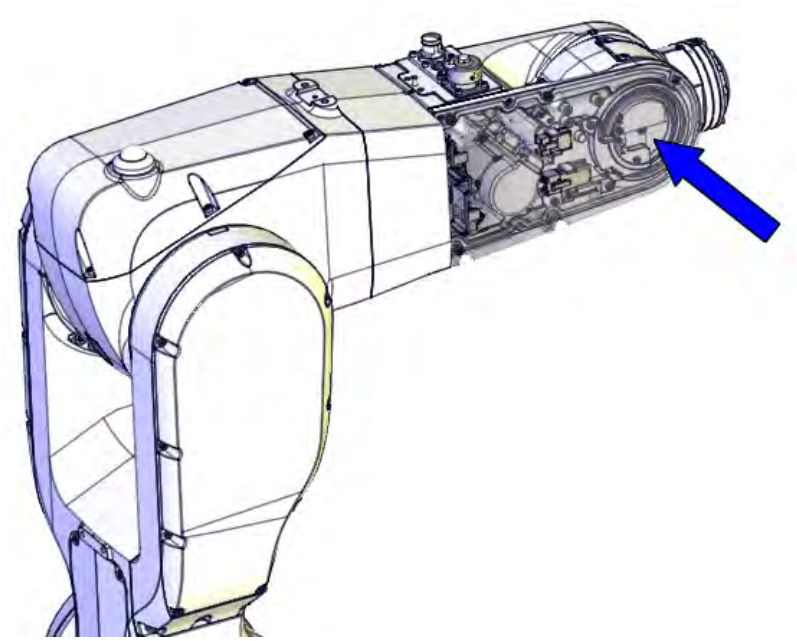

xx1300002397

Required spare parts

Note

The spare part numbers that are listed in the table can be out of date. See the latest revision of *Product manual, spare parts - IRB 1200* on ABB Library.

Spare part	Article number	Note
FPC unit, axis 5	3HAC045743-001	
M2 variseal sealing	3HAC044641-009	Replace if damaged.
Radial sealing	3HAB3701-42	Not used with protection class IP40. Replace if damaged.
Gasket for tubular cable housing cover	3HAC056707-001	Not used with protection class IP40. Replace if damaged.

Required tools and equipment

Equipment, etc.	Article number	Note
Axis-5 sealing assembly tool set	3HAC049701-001	Used to refit the radial sealing, if replacement is needed.
24 VDC power supply	-	Used to release the motor brakes.

Continues on next page

© Copyright 2014 - 2017 ABB. All rights reserved.

4.3.3 Replacing the axis-5 FPC unit
Continued

Equipment, etc.	Article number	Note
Standard toolkit	-	Content is defined in section *Standard toolkit on page 808*.

Required consumables

Consumable	Art. no.	Note
Cleaning agent	-	Loctite 7063
Flange sealing	12340011-116	Loctite 574 For robots with protection class IP67 (option 287-10) For robots with protection type Foundry Plus (option 287-3)

Removing the FPC unit

Use these procedures to remove the FPC unit.

Preparations before removing the axis-5 FPC unit

	Action	Note
1	Jog all axes to zero position.	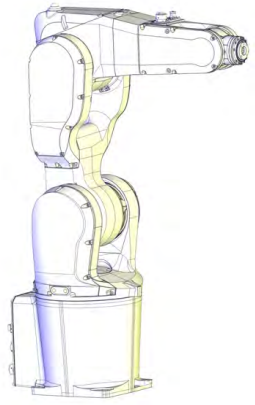 xx1300002581
2	**DANGER** Turn off all: • electric power supply • hydraulic pressure supply • air pressure supply to the robot, before entering the robot working area.	
3	**CAUTION** For robots with protection type Clean Room: Always cut the paint with a knife and grind the paint edge when disassembling parts of the robot! See *Replacing parts on the robot on page 138*	

Continues on next page

© Copyright 2014 - 2017 ABB. All rights reserved.

	Action	Note
4	Remove the tubular cable housing cover.	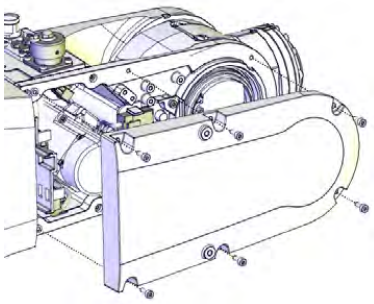 xx1300002389

Removing the tubular cable housing

	Action	Note
1	**CAUTION** For robots with protection type Clean Room: Always cut the paint with a knife and grind the paint edge when disassembling parts of the robot! See *Replacing parts on the robot on page 138*	
2	Snap loose and disconnect the axis-5 FPC connectors.	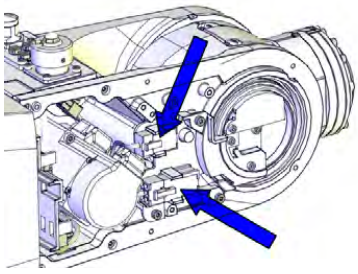 xx1300002390
3	Remove the connector plate by first removing the screws.	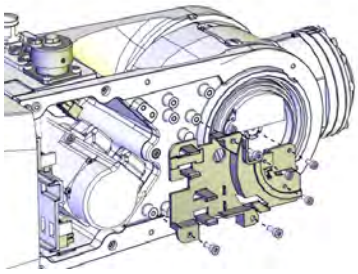 xx1300002391

Continues on next page

© Copyright 2014 - 2017 ABB. All rights reserved.

4.3.3 Replacing the axis-5 FPC unit

Continued

	Action	Note
4	Remove the cable housing of the tubular by first removing the screws. **Note** **For robots with protection class IP67 (option 287-10)** **For robots with protection type Foundry Plus (option 287-3)** The frame is glued and needs to be pried off.	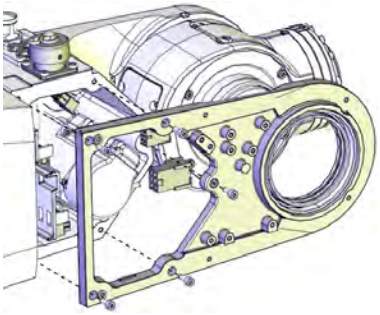 xx1300002392

Removing the axis-5 FPC unit

	Action	Note
1	For robots with protection type Clean Room: Always cut the paint with a knife and grind the paint edge when disassembling parts of the robot! See *Replacing parts on the robot on page 138*	
2	Remove the sleeve screws.	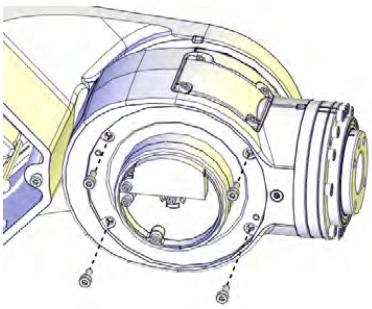 xx1300002393
3	Remove the sleeve by screwing in two of the screws into the press out holes to force the sleeve out.	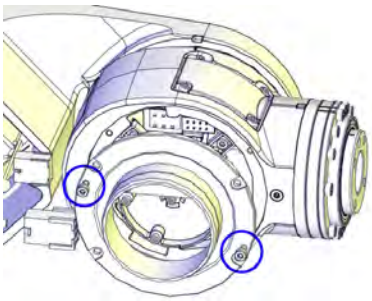 xx1300002582
4	Remove the FPC unit attachment screws and pull out the FPC unit as far as required for the axis-6 motor connectors to be accessed.	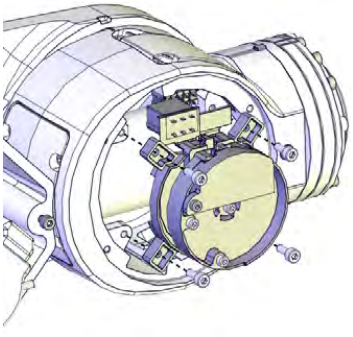 xx1300002394

Continues on next page

© Copyright 2014 - 2017 ABB. All rights reserved.

	Action	Note
5	Disconnect the axis-6 motor connectors and remove the FPC unit completely.	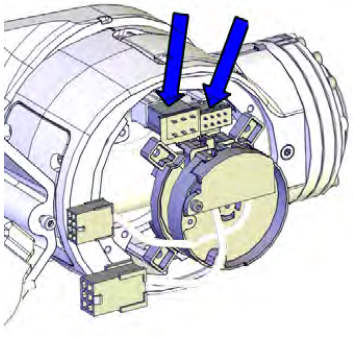 xx1300002395

Refitting the FPC unit

Use these procedures to refit the FPC unit.

Refitting the axis-5 FPC unit

	Action	Note
1	**WARNING** It is important that axis 5 is in zero position when fitting the FPC unit. Make sure that the FPC is in zero position and does not get twisted during refitting.	
2	Clean Room robots: clean the joints that have been opened. See *Replacing parts on the robot on page 138*	
3	Reconnect the axis-6 motor connectors to the FPC unit.	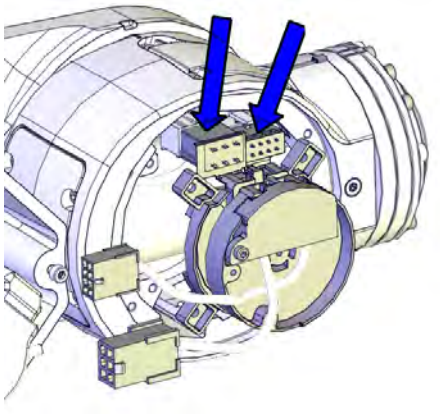 xx1300002395

Continues on next page

© Copyright 2014 - 2017 ABB. All rights reserved.

4.3.3 Replacing the axis-5 FPC unit

Continued

	Action	Note
4	Carefully refit the FPC unit and secure with screws. **Note** Check that the FPC unit is at the zero position when refitting it.	Tightening torque: 0.3 Nm. 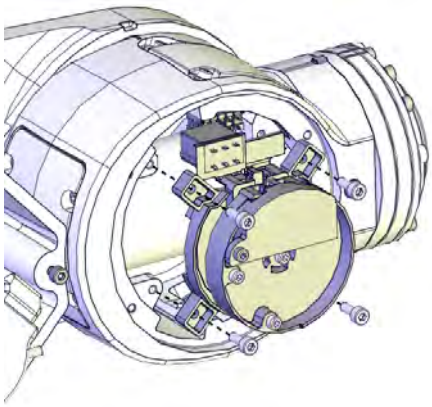 xx1300002394
5	**For robots with protection class IP67 (option 287-10)** **For robots with protection type Foundry Plus (option 287-3)** Remove residual locking liquid and other pollutants with cleaning agent Loctite 7063. Apply flange sealing Loctite 574 on the mounting surfaces of the sleeve. **Note** For Clean Room robots, wipe clean the overflowing Loctite 574 if there is any.	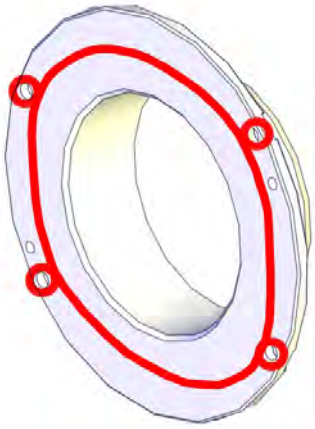 xx1300002609
6	Refit the sleeve and secure with screws. Replace if damaged.	Sleeve: 3HAC044661-001 Tightening torque: 1.5 Nm. 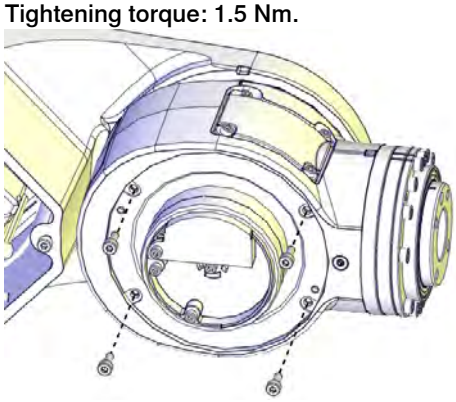 xx1300002393

Continues on next page

© Copyright 2014 - 2017 ABB. All rights reserved.

	Action	Note
7	Clean Room robots: seal and paint the joints that have been opened. See *Replacing parts on the robot on page 138* **Note** After all repair work, wipe the robot free from particles with spirit on a lint free cloth.	

Checking the tubular cable housing sealings

	Action	Note
1	Clean Room robots: clean the joints that have been opened. See *Replacing parts on the robot on page 138*	
2	Check the sealing. Replace if damaged. **CAUTION** Do not fit M2 variseal sealing on Clean Room robots.	M2 variseal sealing: 3HAC044641-009 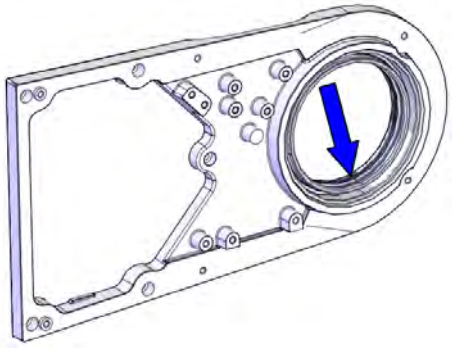 xx1300002396
3	**For robots with protection class IP67 (option 287-10)** **For robots with protection type Foundry Plus (option 287-3)** **For robots with with protection type Clean Room** **For robots with food grade lubrication** Check the radial sealing. Replace if damaged, as described below. If undamaged and properly seated, skip to the next procedure table.	Radial sealing: 3HAB3701-42 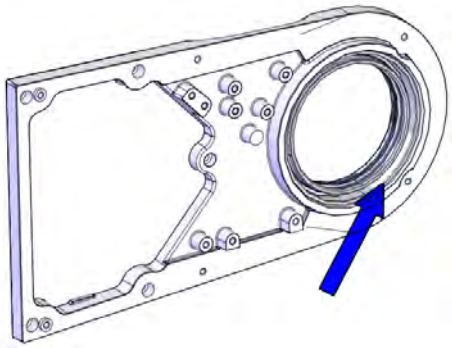 xx1300002608
4	**For robots with protection type Clean Room** Apply a little grease to the sealing when replacing the radial sealing and wipe clean after the replacement.	
5	Fit the radial sealing into the tubular cable housing.	

Continues on next page

© Copyright 2014 - 2017 ABB. All rights reserved.

4.3.3 Replacing the axis-5 FPC unit

Continued

	Action	Note
6	Fit the circular part of the radial sealing assembly tool against the radial sealing.	Axis-5 sealing assembly tool set: 3HAC049701-001
7	Fit the tool plate to the other side of the tubular cable housing with the six screws M6x40.	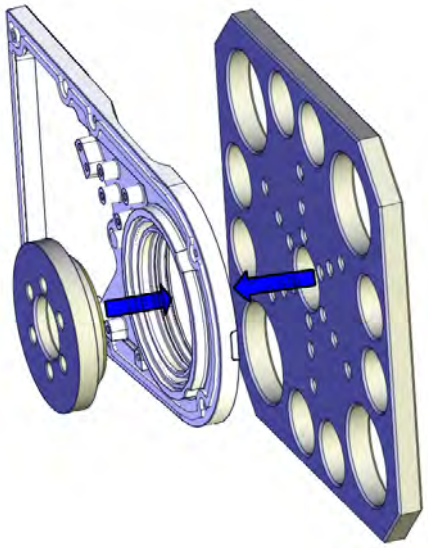 xx1400000485
8	Screw the screws, little by little, to press the sealing into place.	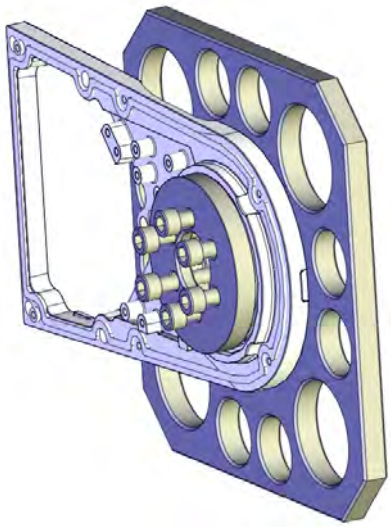 xx1400000486
9	Remove the assembly tool.	
10	Check that the sealing is undamaged and properly fitted.	
11	Clean Room robots: seal and paint the joints that have been opened. See *Replacing parts on the robot on page 138* **Note** After all repair work, wipe the robot free from particles with spirit on a lint free cloth.	

Continues on next page

© Copyright 2014 - 2017 ABB. All rights reserved.

Refitting the tubular cable housing

	Action	Note
1	Clean Room robots: clean the joints that have been opened. See *Replacing parts on the robot on page 138*	
2	**For robots with protection class IP67 (option 287-10)** **For robots with protection type Foundry Plus (option 287-3)** Remove residual locking liquid and other pollutants with cleaning agent Loctite 7063. Apply flange sealing Loctite 574 on the mounting surfaces of the tubular cable housing. **Note** For Clean Room robots, wipe clean the overflowing Loctite 574 if there is any.	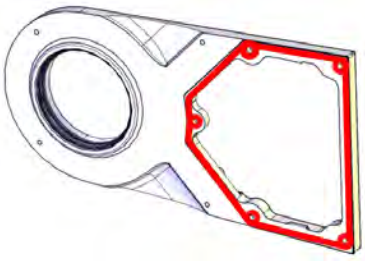 xx1300002610
3	Refit the tubular cable housing with the screws.	Tightening torque: 1.5 Nm. Tubular cable housing: 3HAC059695-001 : 3HAC056143-001 (used with protection type Clean Room) Tubular cable housing, Clean Room Tubular cable housing, food grade lubrication 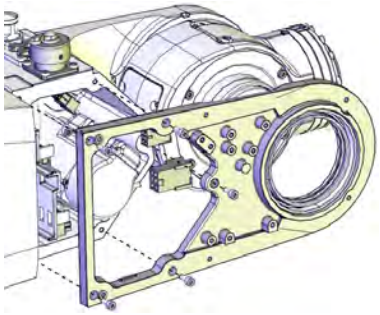 xx1300002392
4	Clean Room robots: seal and paint the joints that have been opened. See *Replacing parts on the robot on page 138* **Note** After all repair work, wipe the robot free from particles with spirit on a lint free cloth.	

Refitting the connector plate

	Action	Note
1	Clean Room robots: clean the joints that have been opened. See *Replacing parts on the robot on page 138*	

Continues on next page

© Copyright 2014 - 2017 ABB. All rights reserved.

4.3.3 Replacing the axis-5 FPC unit
Continued

	Action	Note
2	Refit the connector plate and secure with the M3 screws.	Tightening torque: 0.3 Nm. 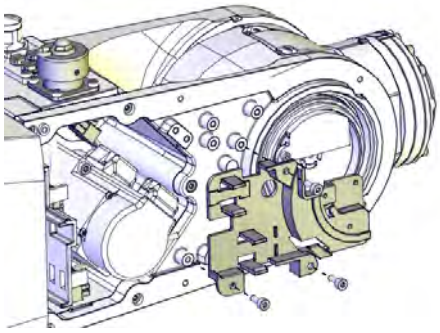 xx1400001401
3	Secure the three M2.5 screws.	Tightening torque: 0.3 Nm. 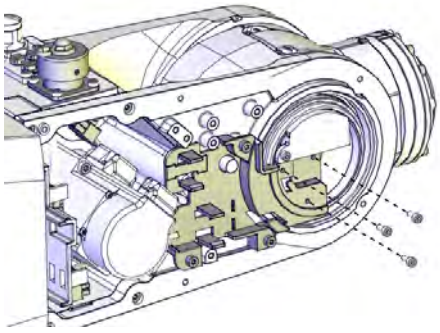 xx1400001402
4	Clean Room robots: seal and paint the joints that have been opened. See *Replacing parts on the robot on page 138* **Note** After all repair work, wipe the robot free from particles with spirit on a lint free cloth.	

Connecting the axis-5 motor FPC connectors

	Action	Note
1	Connect the axis-5 FPC connectors and snap them to their holders.	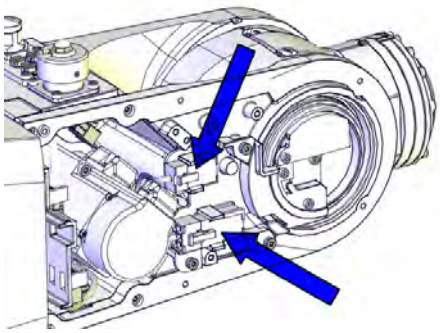 xx1300002390

Continues on next page

© Copyright 2014 - 2017 ABB. All rights reserved.

Refitting the tubular cable housing cover

	Action	Note
1	Clean Room robots: clean the joints that have been opened. See *Replacing parts on the robot on page 138*	
2	**For robots with protection class IP67 (option 287-10)** **For robots with protection type Foundry Plus (option 287-3)** **For robots with with protection type Clean Room** **For robots with food grade lubrication** Check the tubular cable housing cover gasket. Replace if damaged.	Gasket for tubular cable housing cover: 3HAC056707-001 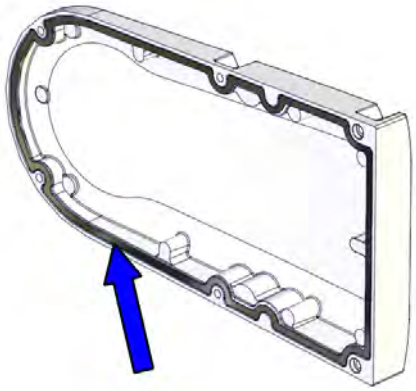 xx1400000345
3	Refit the cover to the cable housing.	Screws: 3HAB3409-207 (M3x8). Tightening torque: 1.5 Nm. 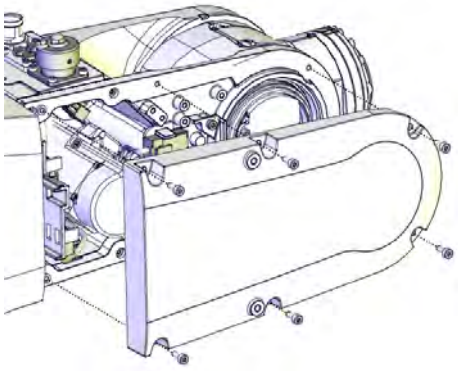 xx1300002389 **Note** Only use specified screws, never replace them with other screws.
4	Clean Room robots: seal and paint the joints that have been opened. See *Replacing parts on the robot on page 138* **Note** After all repair work, wipe the robot free from particles with spirit on a lint free cloth.	

Continues on next page

© Copyright 2014 - 2017 ABB. All rights reserved.

4.3.3 Replacing the axis-5 FPC unit
Continued

Concluding procedure

	Action	Note
1	For robots with protection type Clean Room: Clean and paint the joints that have been opened. See *Replacing parts on the robot on page 138*  **Note** After all repair work, wipe the Clean Room robot free from particles with spirit on a lint free cloth.	
2	 **DANGER** Make sure all safety requirements are met when performing the first test run. These are further detailed in the section *DANGER - First test run may cause injury or damage! on page 48*.	

© Copyright 2014 - 2017 ABB. All rights reserved.

4.3.4 Replacing the EIB/SMB unit

Location of EIB/SMB unit

The EIB/SMB unit is located as shown in the figure.

Note

The EIB unit is used for IRB 1200 no type specified and IRB 1200 Type A.
The SMB unit is used for IRB 1200 Type B.

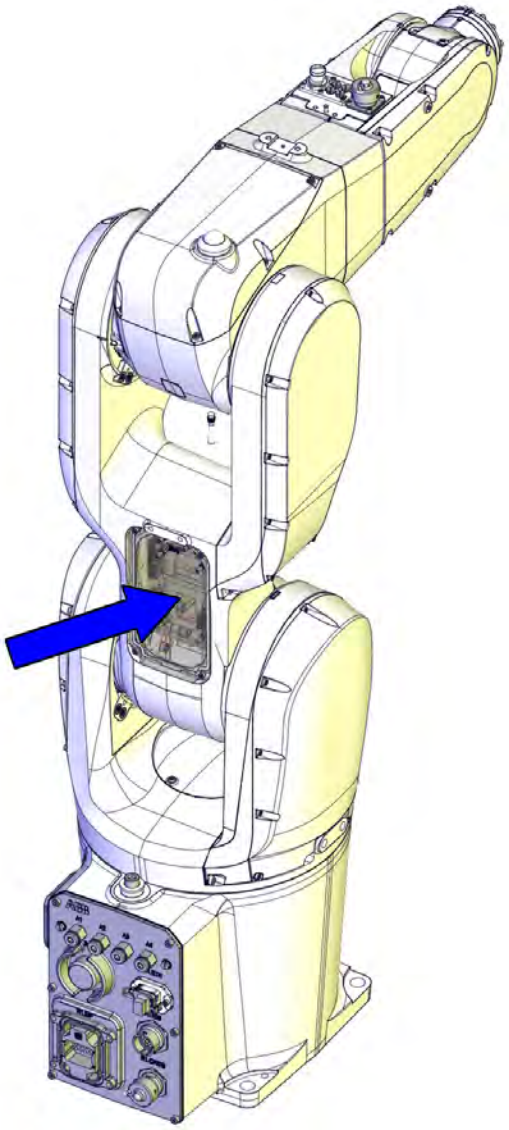

xx1300002574

Continues on next page

© Copyright 2014 - 2017 ABB. All rights reserved.

4.3.4 Replacing the EIB/SMB unit

Continued

Required spare parts

Note

The spare part numbers that are listed in the table can be out of date. See the latest revision of *Product manual, spare parts - IRB 1200* on ABB Library.

Spare part	Article number	Note
EIB unit	3HAC045759-001	
SMB unit	3HAC059122-001	Used for IRB 1200 Type B. See *Type B of IRB 1200 on page 792*.
Gasket on EIB/SMB cover	3HAC056728-001	Not used with protection class IP40. Replace if damaged.
Gasket on cable housing cover	3HAC056724-001	Not used with protection class IP40. Replace if damaged.

Required tools and equipment

Equipment, etc.	Article number	Note
24 VDC power supply	-	Used to release the motor brakes.
Standard toolkit	-	Content is defined in section *Standard toolkit on page 808*.

Removing the EIB/SMB unit

Use these procedures to remove the EIB/SMB unit.

Preparations before removing the EIB/SMB unit

	Action	Note
1	**DANGER** Turn off all: • electric power supply • hydraulic pressure supply • air pressure supply to the robot, before entering the robot working area.	
2	**CAUTION** For robots with protection type Clean Room: Always cut the paint with a knife and grind the paint edge when disassembling parts of the robot! See *Replacing parts on the robot on page 138*	

Continues on next page

© Copyright 2014 - 2017 ABB. All rights reserved.

	Action	Note
3	Remove the lower arm cable housing cover.	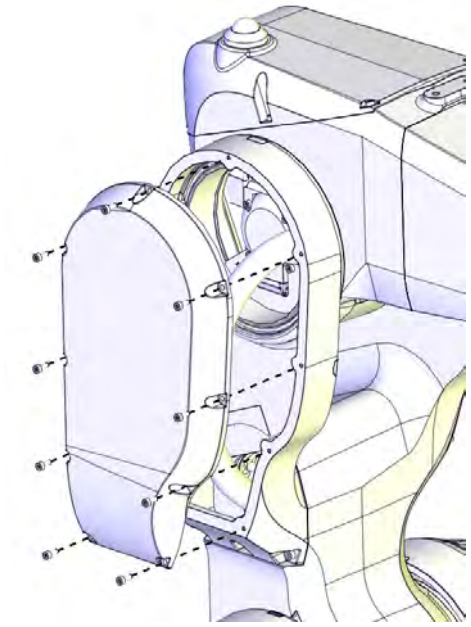 xx1300002400

Disconnecting the cabling in the lower arm

	Action	Note
1	**DANGER** Make sure that all supplies for electrical power, hydraulic pressure, and air pressure are turned off.	
2	**ELECTROSTATIC DISCHARGE (ESD)** The unit is sensitive to ESD. Before handling the unit please read the safety information in the section *WARNING - The unit is sensitive to ESD! on page 50*	
3	**CAUTION** For robots with protection type Clean Room: Always cut the paint with a knife and grind the paint edge when disassembling parts of the robot! See *Replacing parts on the robot on page 138*	

Continues on next page

© Copyright 2014 - 2017 ABB. All rights reserved.

4.3.4 Replacing the EIB/SMB unit

Continued

	Action	Note
4	Remove the EIB/SMB cover attachment screws on the lower arm and carefully open the cover. **CAUTION** Be aware of the cabling that is attached to the cover! The cover can not be removed completely until the connectors and lugs are disconnected, as shown in following step.	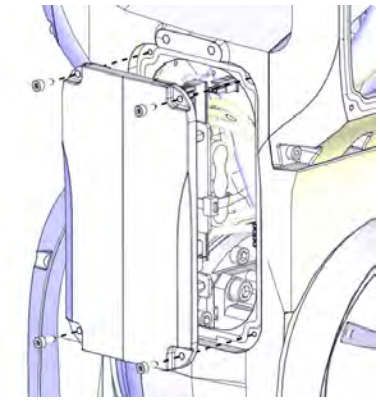 xx1300002427
5	**Valid for IRB 1200 (no type specified) and IRB 1200 Type A** Disconnect the connectors on the EIB unit. • R1.ME1-3 • R1.ME4-6 • R2.EIB Remove the EIB/SMB cover completely from the lower arm.	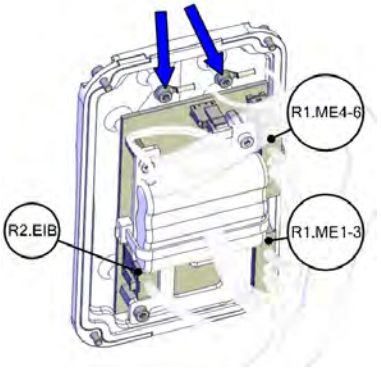 xx1300002428
6	**Valid for IRB 1200 (no type specified) and IRB 1200 Type A** Disconnect the lugs on the EIB/SMB cover.	
7	**Valid for IRB 1200 Type B** Loose the connector screws.	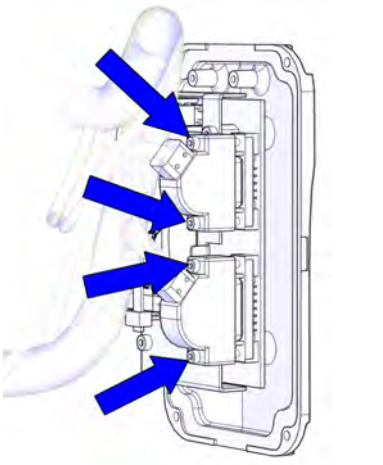 xx1700000004

Continues on next page

© Copyright 2014 - 2017 ABB. All rights reserved.

	Action	Note
8	**Valid for IRB 1200 Type B** Disconnect the connectors on the SMB unit. • R1.ME1,2,4,5 • R1.ME3,6 • R2.SMB Remove the EIB/SMB cover completely from the lower arm.	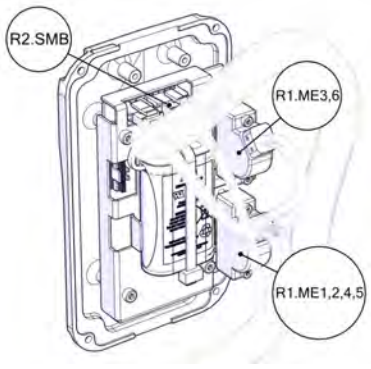 xx1700000005

Removing the EIB unit (IRB 1200 no type specified and IRB 1200 Type A)

	Action	Note
1	**ELECTROSTATIC DISCHARGE (ESD)** The unit is sensitive to ESD. Before handling the unit please read the safety information in the section *WARNING - The unit is sensitive to ESD! on page 50*	
2	**CAUTION** For robots with protection type Clean Room: Always cut the paint with a knife and grind the paint edge when disassembling parts of the robot! See *Replacing parts on the robot on page 138*	
3	Disconnect the battery cable.	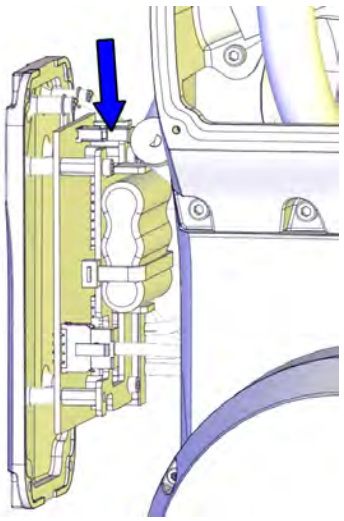 xx1300002571

Continues on next page

© Copyright 2014 - 2017 ABB. All rights reserved.

4.3.4 Replacing the EIB/SMB unit
Continued

	Action	Note
4	Remove the battery pack plate by removing the screws.	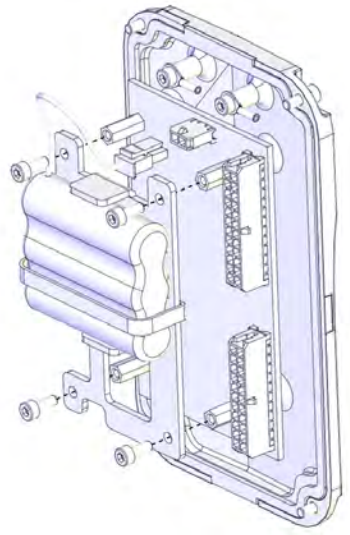 xx1300002572
5	Remove the EIB unit by removing the distance screws.	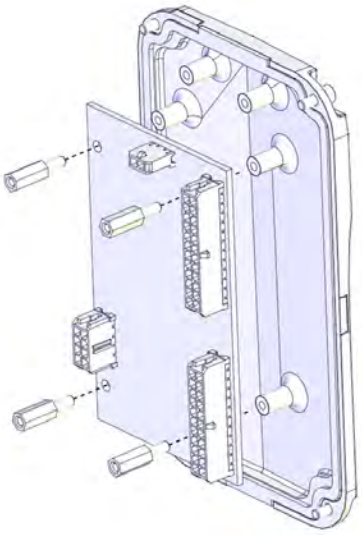 xx1300002573

Removing the SMB unit (IRB 1200 Type B)

	Action	Note
1	**ELECTROSTATIC DISCHARGE (ESD)** The unit is sensitive to ESD. Before handling the unit please read the safety information in the section *WARNING - The unit is sensitive to ESD! on page 50*	

Continues on next page

© Copyright 2014 - 2017 ABB. All rights reserved.

	Action	Note
2	**CAUTION** For robots with protection type Clean Room: Always cut the paint with a knife and grind the paint edge when disassembling parts of the robot! See *Replacing parts on the robot on page 138*	
3	Disconnect the battery cable.	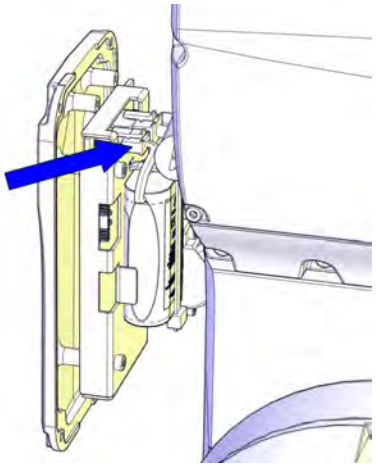 xx1700000006
4	Remove the battery pack plate by removing the screws.	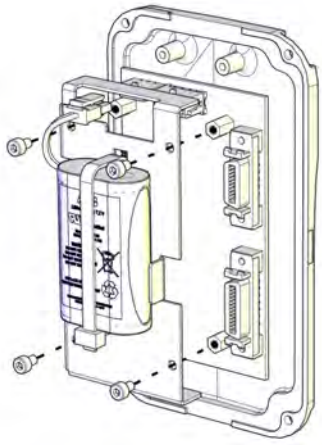 xx1700000008

Continues on next page

© Copyright 2014 - 2017 ABB. All rights reserved.

4.3.4 Replacing the EIB/SMB unit
Continued

	Action	Note
5	Remove the SMB unit by removing the distance screws.	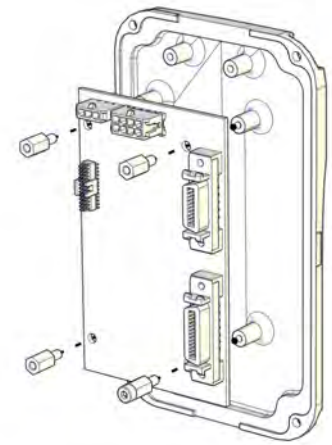 xx1700000009

Refitting the EIB/SMB unit

Use these procedures to refit the EIB/SMB unit.

Refitting the EIB unit (IRB 1200 no type specified and IRB 1200 Type A)

	Action	Note
1	**ELECTROSTATIC DISCHARGE (ESD)** The unit is sensitive to ESD. Before handling the unit please read the safety information in the section *WARNING - The unit is sensitive to ESD! on page 50*	
2	Clean Room robots: clean the joints that have been opened. See *Replacing parts on the robot on page 138*	
3	Refit the EIB unit with the distance screws.	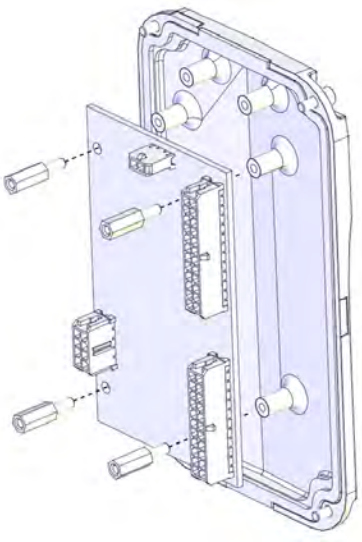 xx1300002573

Continues on next page

© Copyright 2014 - 2017 ABB. All rights reserved.

	Action	Note
4	Refit the battery pack plate with the screws.	Tightening torque: 1.5 Nm. 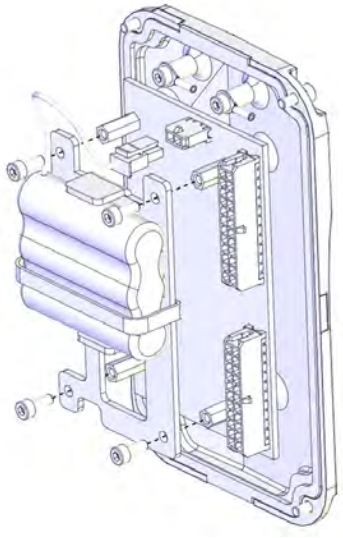 xx1300002572
5	Reconnect the battery cable.	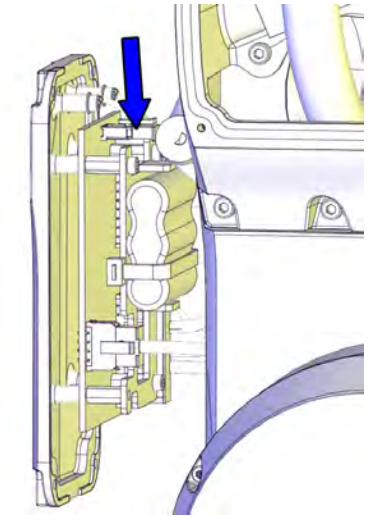 xx1300002571
6	Clean Room robots: seal and paint the joints that have been opened. See *Replacing parts on the robot on page 138* **Note** After all repair work, wipe the robot free from particles with spirit on a lint free cloth.	

Continues on next page

© Copyright 2014 - 2017 ABB. All rights reserved.

4.3.4 Replacing the EIB/SMB unit
Continued

Refitting the SMB unit (IRB 1200 Type B)

	Action	Note
1	**ELECTROSTATIC DISCHARGE (ESD)** The unit is sensitive to ESD. Before handling the unit please read the safety information in the section *WARNING - The unit is sensitive to ESD! on page 50*	
2	Clean Room robots: clean the joints that have been opened. See *Replacing parts on the robot on page 138*	
3	Refit the SMB unit with the distance screws.	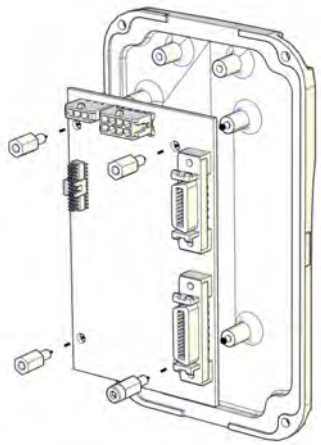 xx1700000009
4	Refit the battery pack plate with the screws.	Tightening torque: 1.5 Nm. 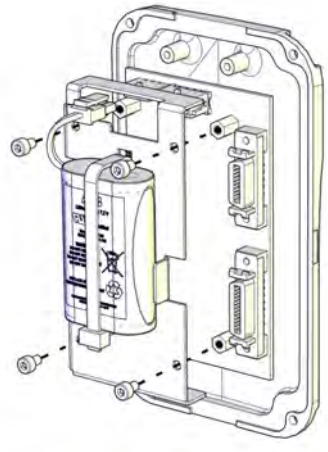 xx1700000008

Continues on next page

© Copyright 2014 - 2017 ABB. All rights reserved.

	Action	Note
5	Reconnect the battery cable.	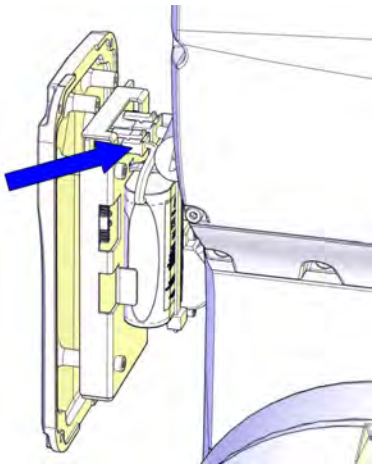 xx1700000006
6	Clean Room robots: seal and paint the joints that have been opened. See *Replacing parts on the robot on page 138* **Note** After all repair work, wipe the robot free from particles with spirit on a lint free cloth.	

Connecting the cabling in the lower arm

	Action	Note
1	**ELECTROSTATIC DISCHARGE (ESD)** The unit is sensitive to ESD. Before handling the unit please read the safety information in the section *WARNING - The unit is sensitive to ESD! on page 50*	
2	Clean Room robots: clean the joints that have been opened. See *Replacing parts on the robot on page 138*	

Continues on next page

© Copyright 2014 - 2017 ABB. All rights reserved.

4.3.4 Replacing the EIB/SMB unit

Continued

	Action	Note
3	**For robots with protection class IP67 (option 287-10)** **For robots with protection type Foundry Plus (option 287-3)** **For robots with with protection type Clean Room** **For robots with food grade lubrication** Check the EIB/SMB cover gasket. Replace if damaged.	Gasket on EIB/SMB cover: 3HAC056728-001 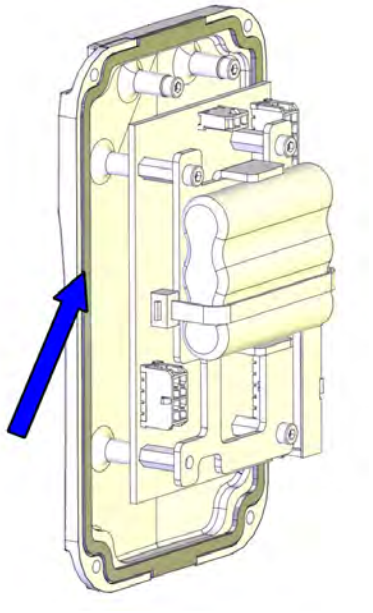 xx1400000475
4	**Valid for IRB 1200 (no type specified) and IRB 1200 Type A** Connect the connectors to the EIB unit. • R1.ME1-3 • R1.ME4-6 • R2.EIB **WARNING** Make sure not to mix the R2.EIB and R2.ME2. Axis 2 may be severely damaged. See the labels on the connectors for correct connection.	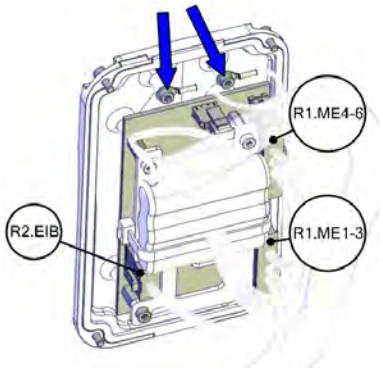 xx1300002428
5	**Valid for IRB 1200 (no type specified) and IRB 1200 Type A** Connect the lugs to the EIB/SMB cover.	
6	**Valid for IRB 1200 Type B** Connect the connectors to the SMB unit. • R1.ME1,2,4,5 • R1.ME3,6 • R2.SMB **WARNING** Make sure not to mix the R2.SMB and R2.ME2. Axis 2 may be severely damaged. See the labels on the connectors for correct connection.	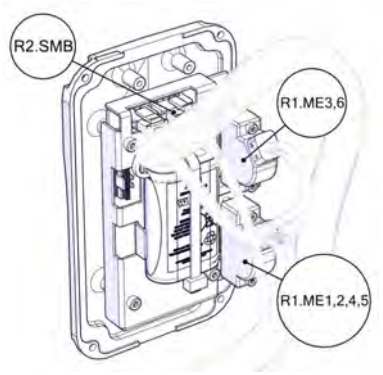 xx1700000005

Continues on next page

© Copyright 2014 - 2017 ABB. All rights reserved.

	Action	Note
7	**Valid for IRB 1200 Type B** Tighten the connector screws.	Tightening torque: 0.3 Nm 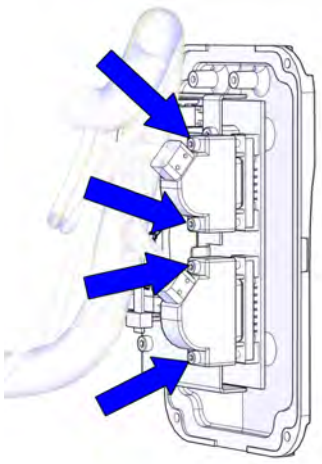 xx1700000004
8	Refit the EIB/SMB cover to the lower arm with the attachment screws.	Screws: 3HAB3409-207 (M3x8). Tightening torque: 1.5 Nm 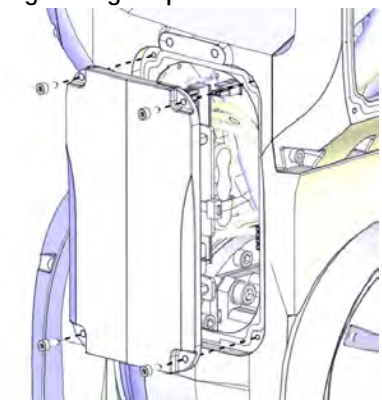 xx1300002427 **Note** Only use specified screws, never replace them with other screws.

Continues on next page

© Copyright 2014 - 2017 ABB. All rights reserved.

4.3.4 Replacing the EIB/SMB unit

Continued

	Action	Note
9	Refit the fix sheet attachment screws in the lower arm.	Tightening torque: 1.5 Nm. 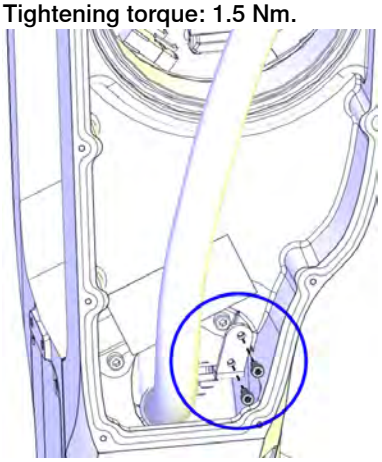 xx1300002426
10	Clean Room robots: seal and paint the joints that have been opened. See *Replacing parts on the robot on page 138* **Note** After all repair work, wipe the robot free from particles with spirit on a lint free cloth.	

Continues on next page

© Copyright 2014 - 2017 ABB. All rights reserved.

Concluding procedure

	Action	Note
1	**For robots with protection class IP67 (option 287-10)** **For robots with protection type Foundry Plus (option 287-3)** **For robots with with protection type Clean Room** **For robots with food grade lubrication** Check the gasket of the cable housing cover. Replace if damaged.	Gasket on cable housing cover: 3HAC056724-001 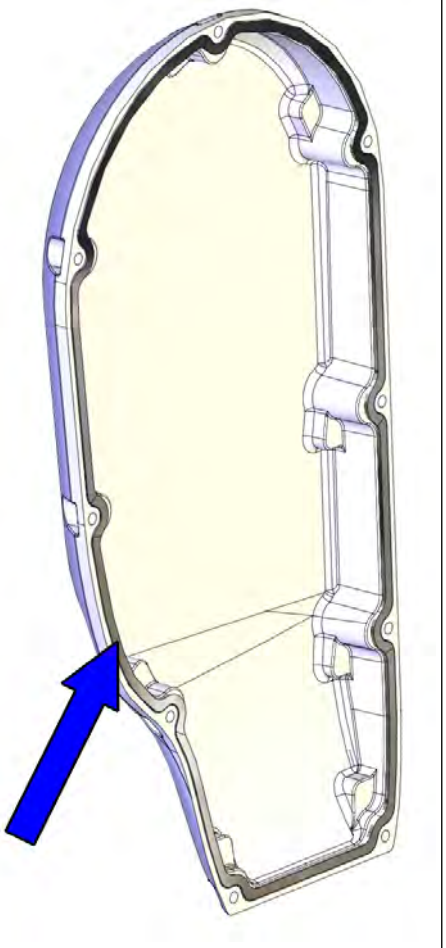 xx1400000048
2	Check the PTFE film on the cable housing cover. Replace if damaged.	PTFE film on cable housing cover: 3HAC044660-001
3	Apply grease to the inner surface of the cable housing cover and the PTFE film surface.	

Continues on next page

© Copyright 2014 - 2017 ABB. All rights reserved.

4.3.4 Replacing the EIB/SMB unit

Continued

	Action	Note
4	Refit the cable housing cover.	Screws: 3HAB3409-207 (M3x8). Tightening torque: 1.5 Nm. 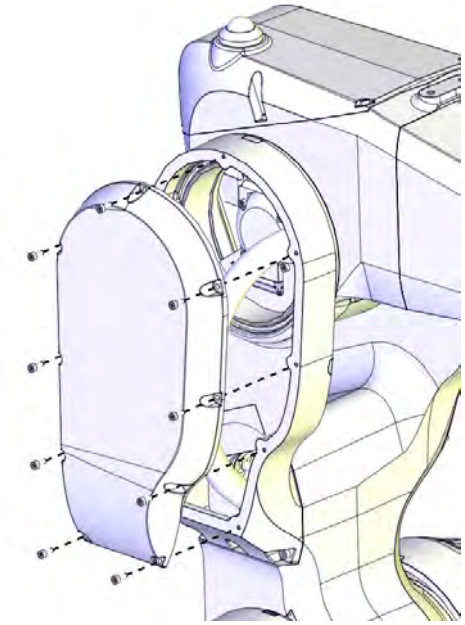 xx1300002400 **Note** Only use specified screws, never replace them with other screws.
5	Update the revolution counters.	See *Updating revolution counters on page 739*.
6	For robots with protection type Clean Room: Clean and paint the joints that have been opened. See *Replacing parts on the robot on page 138* **Note** After all repair work, wipe the Clean Room robot free from particles with spirit on a lint free cloth.	
7	**DANGER** Make sure all safety requirements are met when performing the first test run. These are further detailed in the section *DANGER - First test run may cause injury or damage! on page 48*.	

© Copyright 2014 - 2017 ABB. All rights reserved.

4.4 Upper and lower arms

4.4.1 Replacing the lower arm

Location of the lower arm

The lower arm is located as shown in the figure.

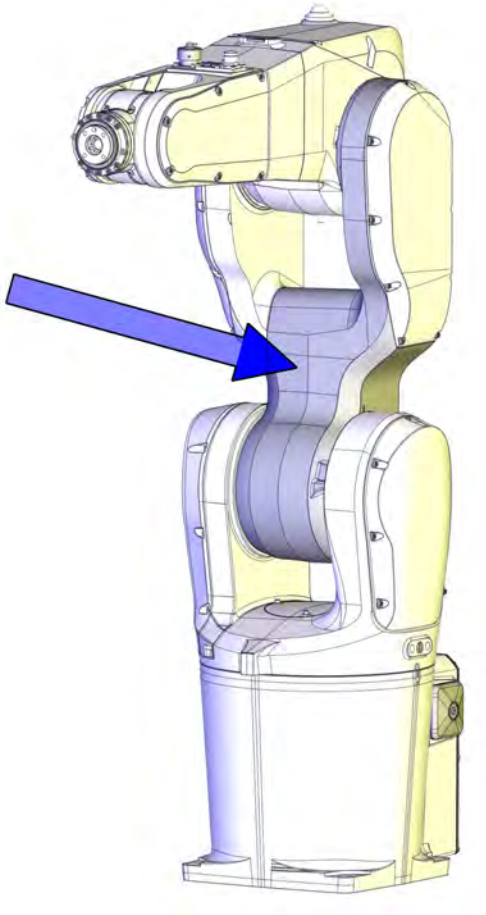

xx1400000423

Required spare parts

Note

The spare part numbers that are listed in the table can be out of date. See the latest revision of *Product manual, spare parts - IRB 1200* on ABB Library.

Spare part	Article number	Note
Lower arm (IRB 1200-7/0.7)	3HAC059687-001	Includes guide pin.
Lower arm, Clean Room (IRB 1200-7/0.7) Lower arm, food grade lubrication (IRB 1200-7/0.7)	3HAC059704-001	Used with protection type Clean Room. Used for robots with food grade lubrication. Includes guide pin.

Continues on next page

© Copyright 2014 - 2017 ABB. All rights reserved.

4.4.1 Replacing the lower arm

Continued

Spare part	Article number	Note
Lower arm (IRB 1200-5/0.9)	3HAC059688-001	Includes guide pin.
Lower arm, Clean Room (IRB 1200-5/0.9) Lower arm, food grade lubrication (IRB 1200-5/0.9)	3HAC059705-001	Used with protection type Clean Room. Used for robots with food grade lubrication. Includes guide pin.
M2 variseal sealing	3HAC044641-005	Used with protection class IP67. Used with protection type Foundry Plus. Replace if damaged.
Cable housing of the lower arm	3HAC059690-001	Replace if damaged.
Cable housing of the lower arm, Clean Room Cable housing of the lower arm, food grade lubrication	3HAC056135-001	Used with protection type Clean Room. Used for robots with food grade lubrication. Replace if damaged.
Gasket on lower arm cable housing	3HAC044895-001	Not used with protection class IP40. Replace if damaged.
M2 variseal sealing	3HAC044641-006	Used with protection class IP67. Used with protection type Foundry Plus. Replace if damaged.
Radial sealing	3HAC024865-001	Not used with protection class IP40. Replace if damaged.
Axis-2 sealing ring	3HAC044677-001	Replace if damaged.
Gasket of axis-2 sealing ring	3HAC045688-001	Not used with protection class IP40. Replace if damaged.
Gasket of plastic plate	3HAC044894-001	Not used with protection class IP40. Replace if damaged.
Lower arm cover	3HAC059689-001	Replace if damaged.
Lower arm cover, Clean Room Lower arm cover, food grade lubrication	3HAC056136-001	Used with protection type Clean Room. Used for robots with food grade lubrication. Replace if damaged.
Gasket on lower arm cover	3HAC056725-001	Not used with protection class IP40. Replace if damaged.
Cable housing of the swing	3HAC059677-001	Replace if damaged.
Cable housing of the swing, Clean Room Cable housing of the swing, food grade lubrication	3HAC056213-001	Used with protection type Clean Room. Used for robots with food grade lubrication. Replace if damaged.

Continues on next page

© Copyright 2014 - 2017 ABB. All rights reserved.

Spare part	Article number	Note
Cable housing cover of the swing	3HAC059678-001	Replace if damaged.
Cable housing cover of the swing, Clean Room Cable housing cover of the swing, food grade lubrication	3HAC056214-001	Used with protection type Clean Room. Used for robots with food grade lubrication. Replace if damaged.
Gasket on cable housing cover	3HAC056726-001	Not used for robots with protection class IP40. Replace if damaged.
M2 variseal sealing	3HAC044641-003	Used with protection class IP67. Used with protection type Foundry Plus. Replace if damaged.
M2 variseal sealing	3HAC044641-004	Used with protection class IP67. Used with protection type Foundry Plus. Replace if damaged.
Radial sealing with dust lip	3HAB3701-41	Not used with protection class IP40. Replace if damaged.
O-ring	3HAC048939-001	Replace if damaged.
Swing cover	3HAC059676-001	Replace if damaged.
Swing cover, Clean Room Swing cover, food grade lubrication	3HAC056215-001	Used with protection type Clean Room. Used for robots with food grade lubrication. Replace if damaged.
Gasket on swing cover	3HAC056727-001	Not used with protection class IP40. Replace if damaged.
Cable harness material set	3HAC049663-001	Includes brackets, sheets, distance screws, plastics, cable clamp, seal bolts and air protection in tubular.
Housing small cover	3HAC059684-001	Replace if damaged.
Housing small cover, Clean Room Housing small cover, food grade lubrication	3HAC056142-001	Used with protection type Clean Room. Used for robots with food grade lubrication. Replace if damaged.
Gasket on cable housing cover	3HAC056724-001	Not used with protection class IP40. Replace if damaged.
PTFE film on cable housing cover	3HAC044660-001	Replace if damaged.
Gasket for tubular cover	3HAC058822-001	Not used with protection class IP40. Replace if damaged.

Continues on next page

© Copyright 2014 - 2017 ABB. All rights reserved.

4.4.1 Replacing the lower arm

Continued

Spare part	Article number	Note
Gasket for tubular cable housing cover	3HAC056707-001	Not used with protection class IP40. Replace if damaged.
Housing cover gasket (IRB 1200-7/0.7)	3HAC056698-001	Not used with protection class IP40. Replace if damaged.
Housing cover gasket (IRB 1200-5/0.9)	3HAC056697-001	Not used with protection class IP40. Replace if damaged.

Required consumables

Consumable	Art. no.	Note
Cable straps	-	
Cleaning agent	-	Loctite 7063
Locking liquid	3HAB7116-1	Loctite 243
Flange sealing	12340011-116	Loctite 574
Grease	3HAB3537-1	Used for lubrication of cable contact areas.
Grease	3HAC029132-001	Used for lubrication of cable contact areas for robots with food grade lubrication.
Sealant	3HAC026759-001	Sikaflex 521FC For robots with protection type Clean Room

Required tools and equipment

Equipment, etc.	Article number	Note
Guide pin for axis-2 gear unit	3HAC049704-001	Always use three guide pins together!
Guide pin for upper arm	3HAC049705-001	Always use three guide pins together!
24 VDC power supply	-	Used to release the motor brakes.
Calibration toolkit, manual calibration	3HAC051256-001	Includes calibration tools, pins and attachment screws for manual calibration method. [i]
Standard toolkit	-	Content is defined in section *Standard toolkit on page 808*.

[i] The robot is calibrated by either manual calibration or Axis Calibration at factory. Always use the same calibration method as used at the factory.
Information about valid calibration method is found on the calibration label or in the calibration menu on the FlexPendant.
If no data is found related to standard calibration, manual calibration is used as default.

Continues on next page

© Copyright 2014 - 2017 ABB. All rights reserved.

Deciding calibration routine

Decide which calibration routine to be used, based on the information in the table. Depending on which routine is chosen, action might be required prior to beginning the repair work of the robot, see the table.

	Action	Note
1	Decide which calibration routine to use for calibrating the robot. • Reference calibration. External cable packages (DressPack) and tools can stay fitted on the robot. • Fine calibration. All external cable packages (DressPack) and tools must be removed from the robot.	**Note** Calibrating axis 6 always requires tools to be removed from the mounting flange (also for reference calibration) since the mounting flange is used for installation of the calibration tool.
	If the robot is to be calibrated with reference calibration: Find previous reference values for the axis or create new reference values. These values are to be used after the repair procedure is completed, for calibration of the robot. If no previous reference values exist, and no new reference values can be created, then reference calibration is not possible.	Follow the instructions given in the reference calibration routine on the FlexPendant to create reference values. Creating new values requires possibility to move the robot. Read more about reference calibration for Axis Calibration in *Reference calibration routine on page 743*.
	If the robot is to be calibrated with fine calibration: Remove all external cable packages (DressPack) and tools from the robot.	

Removing the lower arm

Use this procedure to remove the lower arm.

Preparations before removing the lower arm

	Action	Note
1	Decide which calibration routine to use, and take actions accordingly prior to beginning the repair procedure.	
2	Jog all axes to zero position.	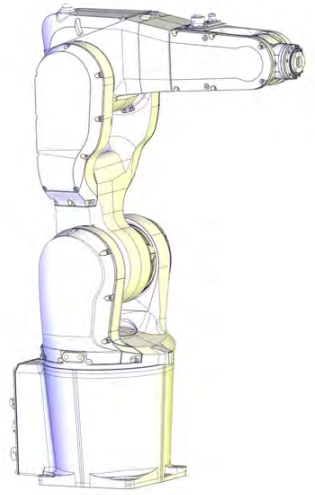 xx1300002581

Continues on next page

© Copyright 2014 - 2017 ABB. All rights reserved.

4.4.1 Replacing the lower arm

Continued

	Action	Note
3	**DANGER** Turn off all: • electric power supply • hydraulic pressure supply • air pressure supply to the robot, before entering the robot working area.	

Getting access to inside of the wrist unit

	Action	Note
1	**DANGER** Make sure that all supplies for electrical power, hydraulic pressure, and air pressure are turned off.	
2	**CAUTION** For robots with protection type Clean Room: Always cut the paint with a knife and grind the paint edge when disassembling parts of the robot! See *Replacing parts on the robot on page 138*	

Continues on next page

© Copyright 2014 - 2017 ABB. All rights reserved.

	Action	Note
3	Remove the covers on each side of the wrist by removing their screws. **Note** **For robots with protection class IP67 (option 287-10)** **For robots with protection type Foundry Plus (option 287-3)** The two front screws on the left hand side cover (encircled in the figure) have been fitted with locking liquid. The tubular cover (left hand side cover) has two extra screws and washers, as encircled in the figure. **Note** **For robots with protection type Clean Room** The tubular cover (left hand side cover) has two extra screws and washers, as encircled in the figure.	For robots with protection class IP67 (option 287-10) For robots with protection type Foundry Plus (option 287-3) 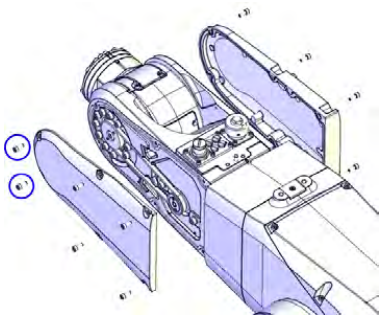 xx1300002349 For robots with protection type Clean Room 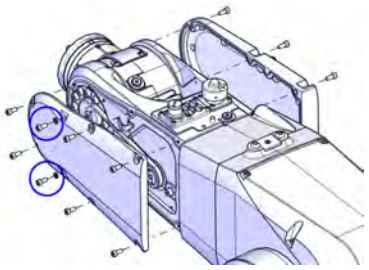 xx1600001148

Disconnecting the axis-5 motor connectors

	Action	Note
1	**DANGER** Make sure that all supplies for electrical power, hydraulic pressure, and air pressure are turned off.	
2	Snap loose the motor connectors from their holders and then disconnect them. • R3.MP5 • R3.ME5 **Tip** Take photos of the connector and cable position before disconnecting them, to have as a reference when reconnecting.	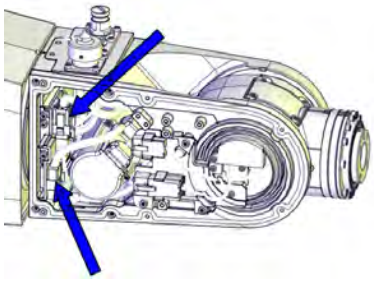 xx1300002360

Continues on next page

© Copyright 2014 - 2017 ABB. All rights reserved.

4.4.1 Replacing the lower arm

Continued

Disconnecting the axis-5 FPC connectors

	Action	Note
1	**DANGER** Make sure that all supplies for electrical power, hydraulic pressure, and air pressure are turned off.	
2	Snap loose and disconnect the axis-5 FPC connectors.	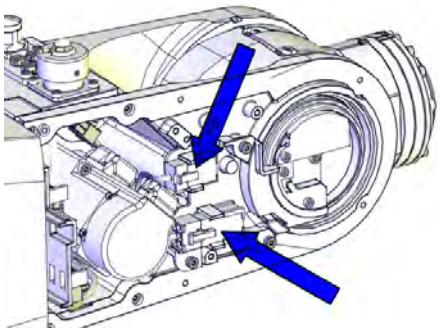 xx1300002390

Disconnecting the air hoses

	Action	Note
1	**DANGER** Make sure that all supplies for electrical power, hydraulic pressure, and air pressure are turned off.	
2	Disconnect the air hoses.	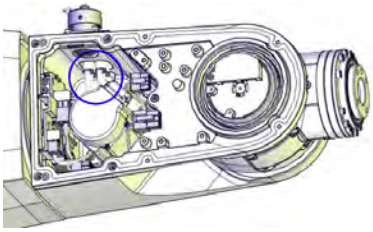 xx1400000738

Disconnecting the axis-4 FPC connectors

	Action	Note
1	**DANGER** Make sure that all supplies for electrical power, hydraulic pressure, and air pressure are turned off.	

Continues on next page

© Copyright 2014 - 2017 ABB. All rights reserved.

	Action	Note
2	**CAUTION** For robots with protection type Clean Room: Always cut the paint with a knife and grind the paint edge when disassembling parts of the robot! See *Replacing parts on the robot on page 138*	
3	Remove the cable housing cover.	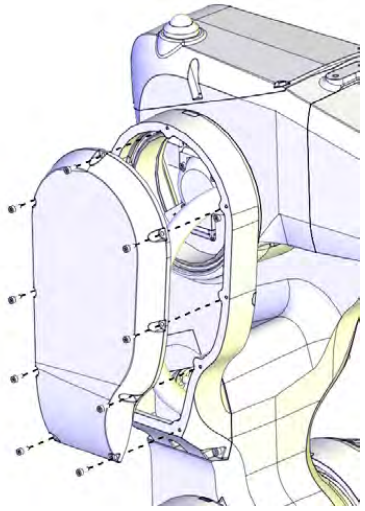 xx1300002400
4	Remove the plate.	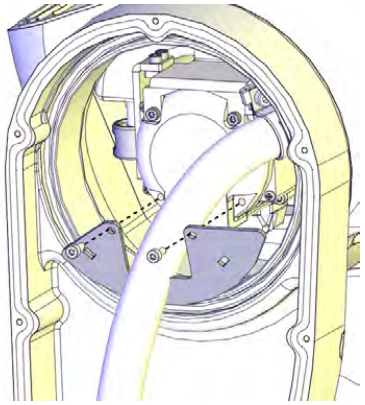 xx1300002413

Continues on next page

© Copyright 2014 - 2017 ABB. All rights reserved.

4.4.1 Replacing the lower arm

Continued

	Action	Note
5	Pull out the FPC connectors from the housing and disconnect them.	Cable layout in IRB 1200-7/0.7 : 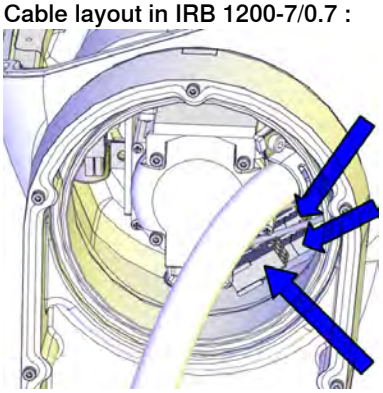 xx1300002412 Cable layout in IRB 1200-5/0.9 : 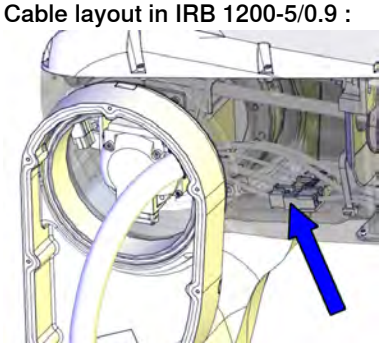 xx1400001471
6	Remove the small cover of the housing.	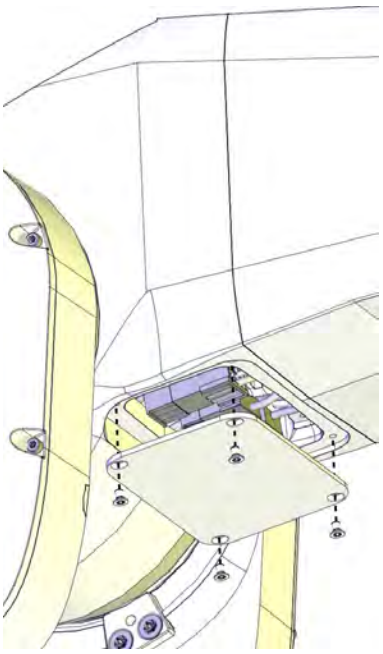 xx1300002398

Continues on next page

© Copyright 2014 - 2017 ABB. All rights reserved.

	Action	Note
7	Disconnect the remaining FPC connectors.	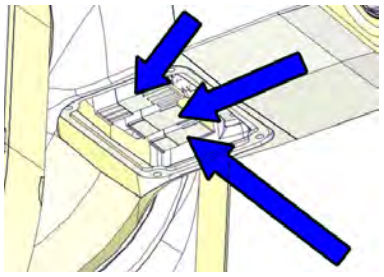 xx1300002399

Disconnecting the axis-4 motor connectors

	Action	Note
1	**DANGER** Make sure that all supplies for electrical power, hydraulic pressure, and air pressure are turned off.	
2	**CAUTION** For robots with protection type Clean Room: Always cut the paint with a knife and grind the paint edge when disassembling parts of the robot! See *Replacing parts on the robot on page 138*	
3	Remove the cover from the upper arm housing. **CAUTION** **For robots with safety lamp (option)** Be aware of the signal lamp cables that are attached inside the housing! Disconnect the lamp cable connectors R3.H1 and R3.H2 and then lift away the cover completely.	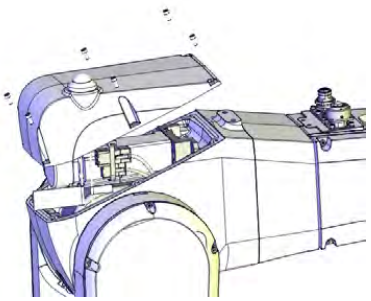 xx1300000456
4	Cut the strap that holds the connectors.	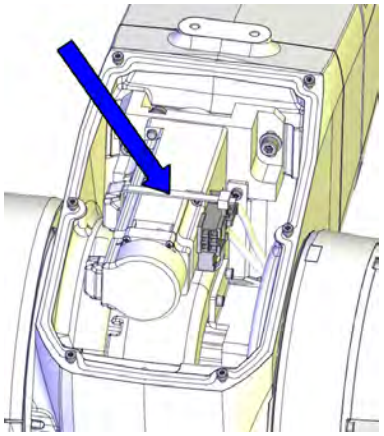 xx1300002494

Continues on next page

© Copyright 2014 - 2017 ABB. All rights reserved.

4.4.1 Replacing the lower arm

Continued

	Action	Note
5	Disconnect the motor connectors. **Tip** Take photos of the connector and cable position before disconnecting them, to have as a reference when reconnecting.	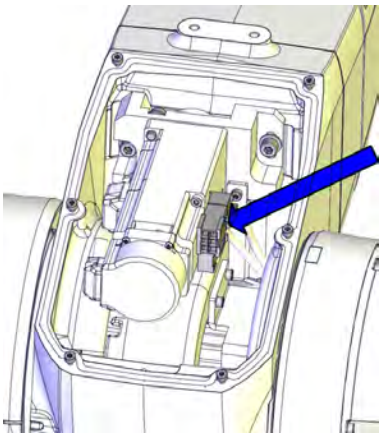 xx1300002495

Disconnecting the axis-3 motor connectors

	Action	Note
1	**DANGER** Make sure that all supplies for electrical power, hydraulic pressure, and air pressure are turned off.	
2	Pull out the axis-3 motor connectors from the housing and disconnect them.	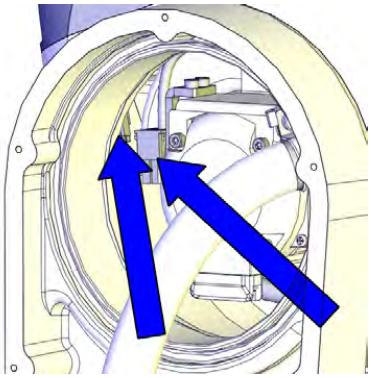 xx1300002420

Removing the cable package in the housing

	Action	Note
1	**DANGER** Make sure that all supplies for electrical power, hydraulic pressure, and air pressure are turned off.	

Continues on next page

© Copyright 2014 - 2017 ABB. All rights reserved.

	Action	Note
2	Remove the screw that fastens the air hose holder.	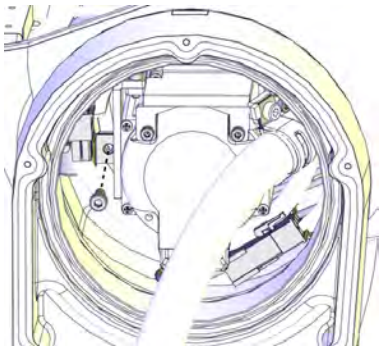 xx1300002422
3	Remove the screws that fasten the fix sheet to the inner plastic guide.	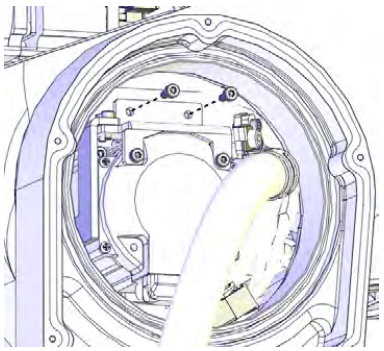 xx1300002421
4	Remove the screws that fasten the fix sheet to the motor.	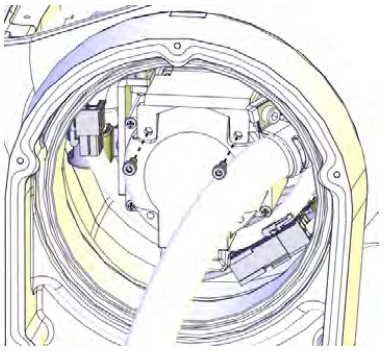 xx1300002423
5	Pull out the fix sheet a bit, to access the screws that fasten the cable bracket to the sheet. Loosen the bracket from the sheet by removing the two screws. **CAUTION** Do not loosen the cable clamp screw! There is a risk of rearrangement of the cable layout which would result in shortened lifetime of the cable harness.	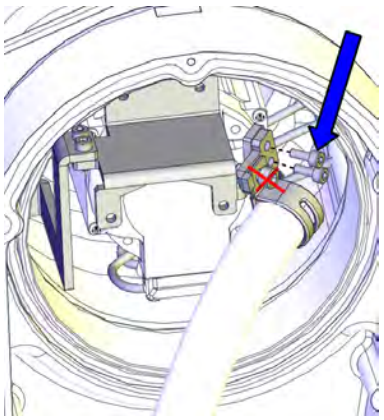 xx1300002424

Continues on next page

© Copyright 2014 - 2017 ABB. All rights reserved.

4.4.1 Replacing the lower arm

Continued

	Action	Note
6	**Valid for IRB 1200-5/0.9** Cut the cable straps at the bottom of the housing.	

Disconnecting the cabling in the lower arm

	Action	Note
1	**DANGER** Make sure that all supplies for electrical power, hydraulic pressure, and air pressure are turned off.	
2	**ELECTROSTATIC DISCHARGE (ESD)** The unit is sensitive to ESD. Before handling the unit please read the safety information in the section *WARNING - The unit is sensitive to ESD! on page 50*	
3	**CAUTION** For robots with protection type Clean Room: Always cut the paint with a knife and grind the paint edge when disassembling parts of the robot! See *Replacing parts on the robot on page 138*	
4	Remove the EIB/SMB cover attachment screws on the lower arm and carefully open the cover. **CAUTION** Be aware of the cabling that is attached to the cover! The cover can not be removed completely until the connectors and lugs are disconnected, as shown in following step.	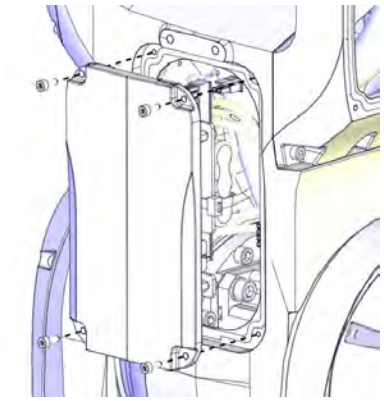 xx1300002427

Continues on next page

© Copyright 2014 - 2017 ABB. All rights reserved.

	Action	Note
5	**Valid for IRB 1200 (no type specified) and IRB 1200 Type A** Disconnect the connectors on the EIB unit. • R1.ME1-3 • R1.ME4-6 • R2.EIB Remove the EIB/SMB cover completely from the lower arm.	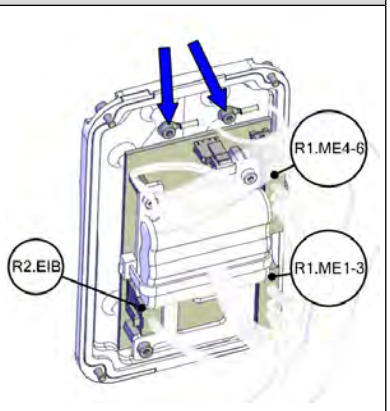 xx1300002428
6	**Valid for IRB 1200 (no type specified) and IRB 1200 Type A** Disconnect the lugs on the EIB/SMB cover.	
7	**Valid for IRB 1200 Type B** Loose the connector screws.	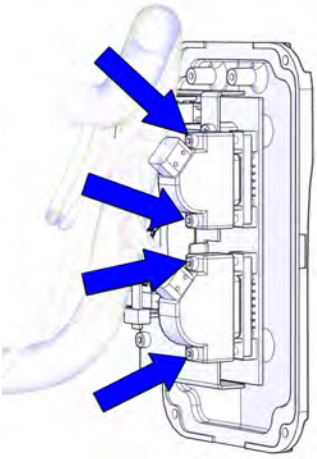 xx1700000004
8	**Valid for IRB 1200 Type B** Disconnect the connectors on the SMB unit. • R1.ME1,2,4,5 • R1.ME3,6 • R2.SMB Remove the EIB/SMB cover completely from the lower arm.	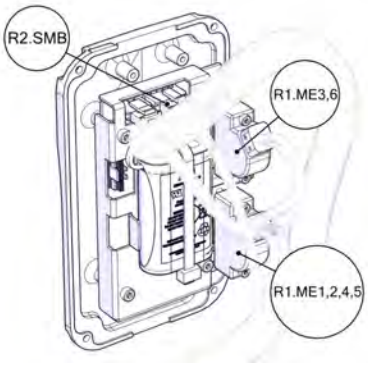 xx1700000005

Removing the cable package in the lower arm

	Action	Note
1	**DANGER** Make sure that all supplies for electrical power, hydraulic pressure, and air pressure are turned off.	

Continues on next page

© Copyright 2014 - 2017 ABB. All rights reserved.

4.4.1 Replacing the lower arm

Continued

	Action	Note
2	**CAUTION** For robots with protection type Clean Room: Always cut the paint with a knife and grind the paint edge when disassembling parts of the robot! See *Replacing parts on the robot on page 138*	
3	Pull the cable package out from the upper arm housing.	
4	Remove the fix sheet attachment screws in the lower arm.	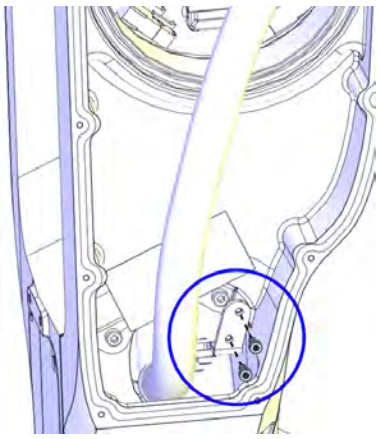 xx1300002426
5	Pull out the cable package a bit from the lower arm and remove the bracket from the cable package by removing the screws. **CAUTION** Do not loosen the cable clamp screw! There is a risk of rearrangement of the cable layout which would result in shortened lifetime of the cable harness.	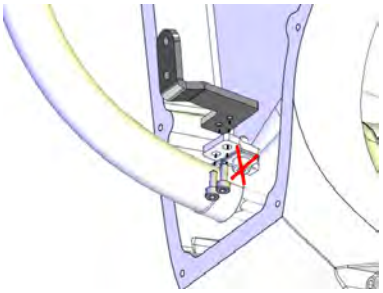 xx1300002430
6	Cut the cable strap that holds the cabling together inside the EIB/SMB cavity.	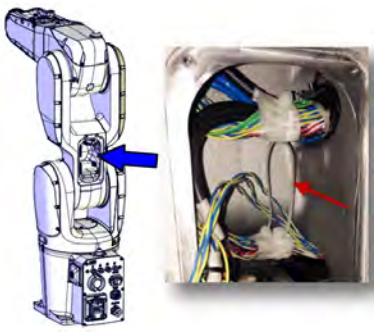 xx1400001130

Continues on next page

© Copyright 2014 - 2017 ABB. All rights reserved.

	Action	Note
7	**For robots with protection type Clean Room** Remove the swing sealing plug. Follow the procedure specified in *Removing the swing sealing plug on page 144*.	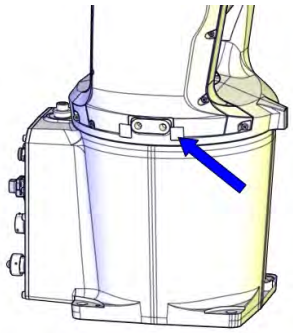 xx1600000205
8	Remove the swing cable housing cover by removing the screws.	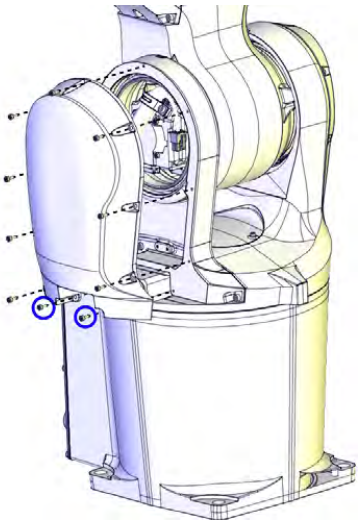 xx1300002431
9	Cut the cable straps.	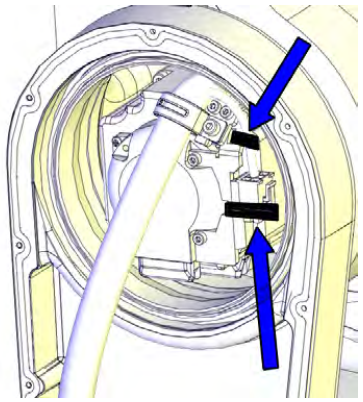 xx1400001528

Continues on next page

© Copyright 2014 - 2017 ABB. All rights reserved.

4.4.1 Replacing the lower arm

Continued

	Action	Note
10	Remove the axis-2 motor bracket screws.	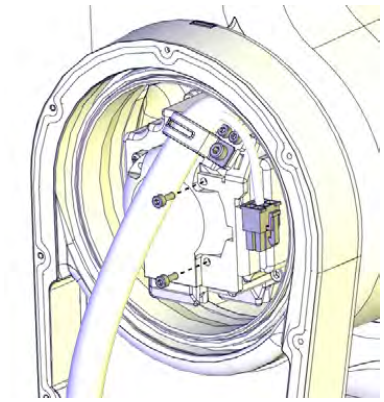 xx1300002432
11	Pull out the cabling and then remove the axis-2 motor bracket from the cable package by removing the screws. **CAUTION** Do not loosen the cable clamp screw! There is a risk of rearrangement of the cable layout which would result in shortened lifetime of the cable harness.	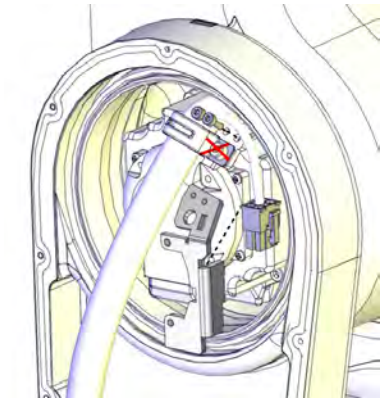 xx1300002433
12	Disconnect the motor connectors. • R2.ME2 • R2.MP2	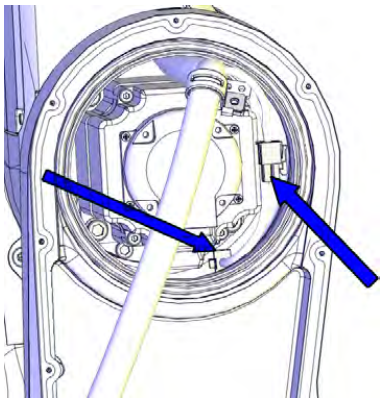 xx1300002434

Continues on next page

© Copyright 2014 - 2017 ABB. All rights reserved.

	Action	Note
13	Loosen the cable housing from the swing by removing the screws. Leave it hanging on the cable package.	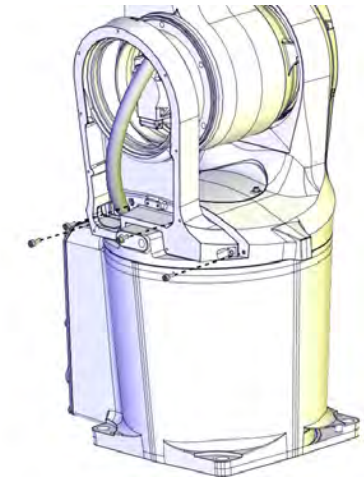 xx1300002435
14	Remove the axis-2 sealing ring by removing the screws.	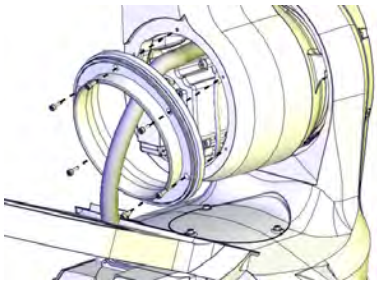 xx1400000020
15	Pull out the cable package from the lower arm. **Tip** There is a groove on the lower arm casting that simplifies cable passage, if needed. Its position can easily be felt by hand.	
16	Loosen the plastic plate from the cable housing in order to facilitate continued removal of the cable package .	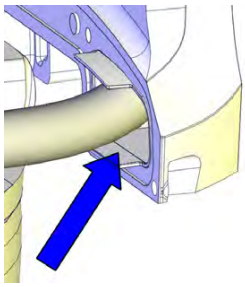 xx1400000023

Continues on next page

© Copyright 2014 - 2017 ABB. All rights reserved.

4.4.1 Replacing the lower arm

Continued

Removing the lower arm cable housing

	Action	Note
1	**DANGER** Make sure that all supplies for electrical power, hydraulic pressure, and air pressure are turned off.	
2	**CAUTION** For robots with protection type Clean Room: Always cut the paint with a knife and grind the paint edge when disassembling parts of the robot! See *Replacing parts on the robot on page 138*	
3	Remove the cable housing of the lower arm by removing the screws.	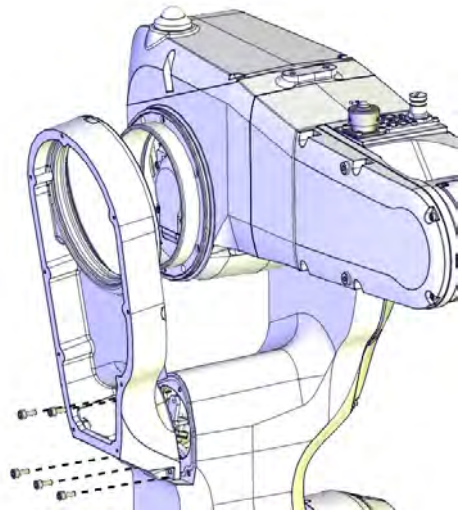 xx1300002529

Removing the upper arm

	Action	Note
1	**DANGER** Make sure that all supplies for electrical power, hydraulic pressure, and air pressure are turned off.	
2	**CAUTION** For robots with protection type Clean Room: Always cut the paint with a knife and grind the paint edge when disassembling parts of the robot! See *Replacing parts on the robot on page 138*	

Continues on next page

© Copyright 2014 - 2017 ABB. All rights reserved.

	Action	Note
3	Remove the lower arm cover.	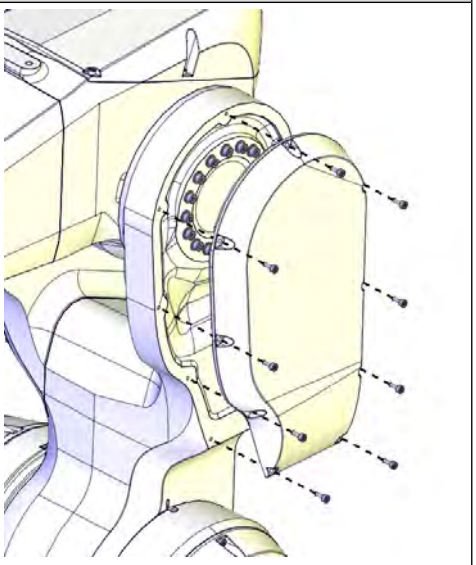 xx1300002528
4	**CAUTION** The upper arm weighs 17 kg. All lifting accessories used must be sized accordingly!	
5	Fit lifting slings to the upper arm to support the weight of the arm. (no force)	
6	Remove the upper arm screws. **WARNING** This releases the upper arm from the lower arm. Make sure the weight of the upper arm is properly secured by the lifting slings.	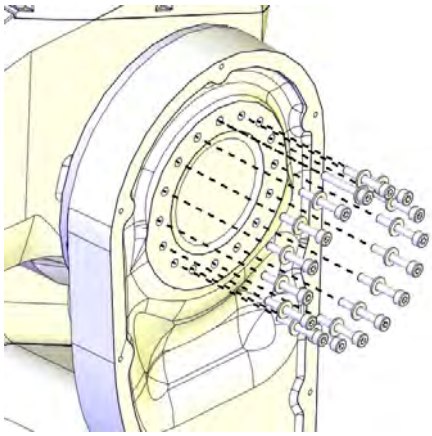 xx1300002531

Continues on next page

© Copyright 2014 - 2017 ABB. All rights reserved.

4.4.1 Replacing the lower arm

Continued

	Action	Note
7	Fit guide pins to the upper arm.	Guide pin for upper arm: 3HAC049705-001 Always use three guide pins together! 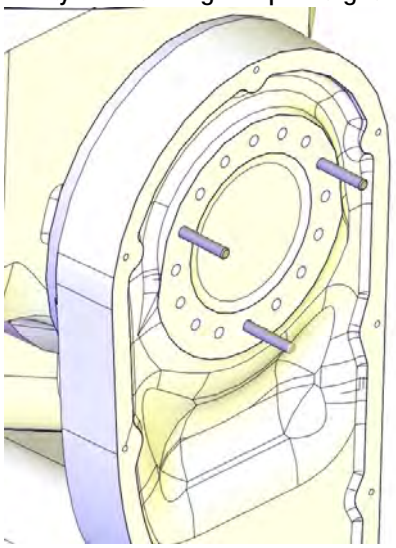 xx1400000771
8	Separate the upper and lower arm with guidance from the guide pins.	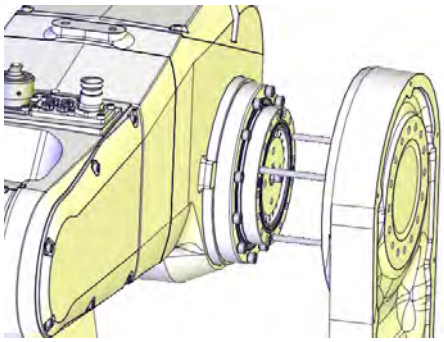 xx1300002533

Removing the lower arm

	Action	Note
1	**DANGER** Make sure that all supplies for electrical power, hydraulic pressure, and air pressure are turned off.	
2	**CAUTION** For robots with protection type Clean Room: Always cut the paint with a knife and grind the paint edge when disassembling parts of the robot! See *Replacing parts on the robot on page 138*	

Continues on next page

© Copyright 2014 - 2017 ABB. All rights reserved.

	Action	Note
3	Remove the swing cover.	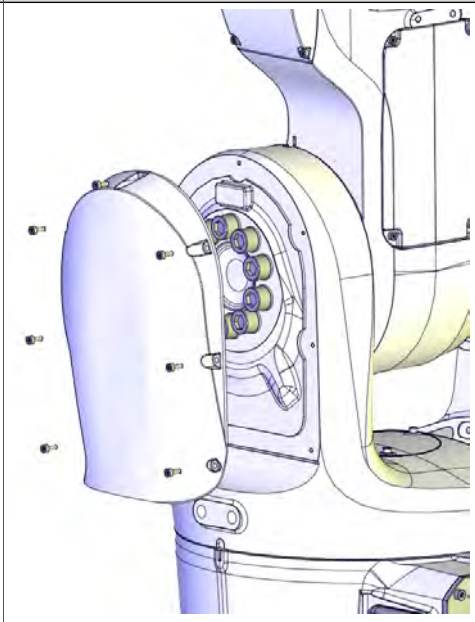 xx1300002551
4	Remove the lower arm screws and washers. **WARNING** This releases the lower arm from the swing. Make sure the weight of the arm is properly secured. The lower arm weighs 13 kg. If the upper arm is also attached to the lower arm, it adds an additional 17 kg to the total weight.	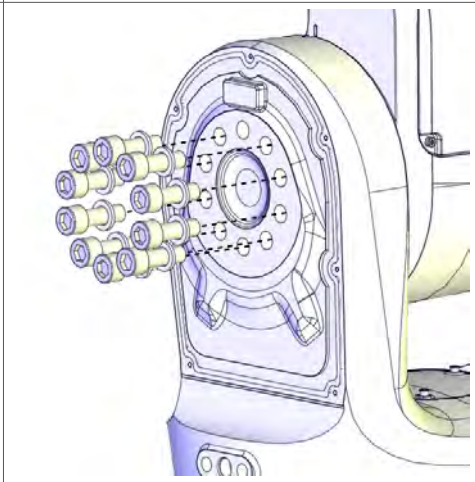 xx1300002552

Continues on next page

© Copyright 2014 - 2017 ABB. All rights reserved.

4.4.1 Replacing the lower arm
Continued

	Action	Note
5	Fit guide pins to the gearbox.	Guide pin for axis-2 gear unit: 3HAC049704-001 Always use three guide pins together! 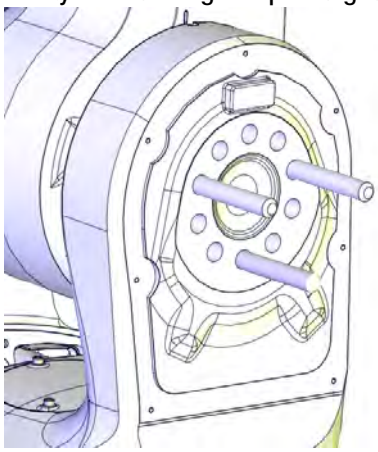 xx1300002563
6	Separate the lower arm from the swing. **Tip** If the lower arm is hard to loosen from the swing, two of the lower arm screws can be refitted in their attachment holes. Leave some space between the screw head and the swing casting. Then use a plastic hammer to knock on the screws lightly and evenly.	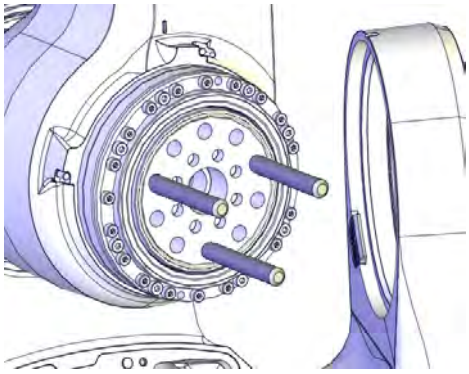 xx1300002553

Removing the axis-2 drive unit

	Action	Note
1	**DANGER** Make sure that all supplies for electrical power, hydraulic pressure, and air pressure are turned off.	
2	**CAUTION** For robots with protection type Clean Room: Always cut the paint with a knife and grind the paint edge when disassembling parts of the robot! See *Replacing parts on the robot on page 138*	

Continues on next page

© Copyright 2014 - 2017 ABB. All rights reserved.

	Action	Note
3	**CAUTION** The lower and upper arms together weigh 30 kg. All lifting accessories used must be sized accordingly!	
4	If there is enough space on the site, lay down the lower arm on a workbench. Make sure to support the gravity center of the lower arm. If the site is cramp, the procedure can be performed having the lower arm hanging in the lifting slings. If removing the axis-2 drive unit from a hanging lower arm, it is best performed by two persons working together: • Person 1: Hold the lower arm still. • Person 2: Remove the drive unit screws according to step below.	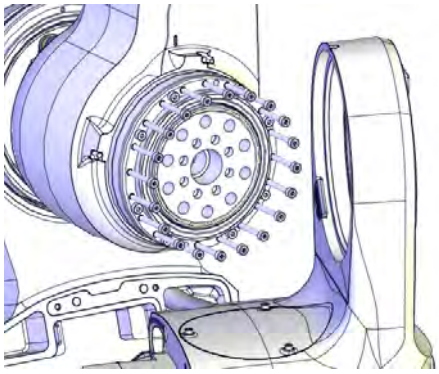 xx1300002554
5	Remove the grey screws from the drive unit. **WARNING** Keep the eight black screws fitted. They hold the gearbox together. Removing them can damage the gearbox severely.	
6	Insert two M4 screws to the press out holes and press out the drive unit.	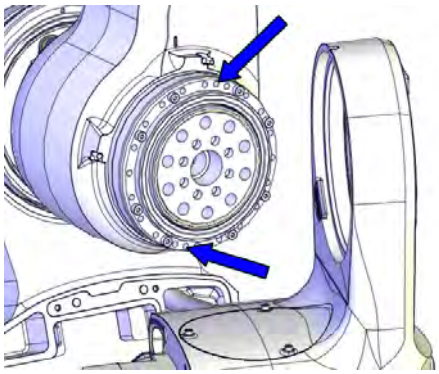 xx1400000008
7	Carefully pull out the complete drive unit.	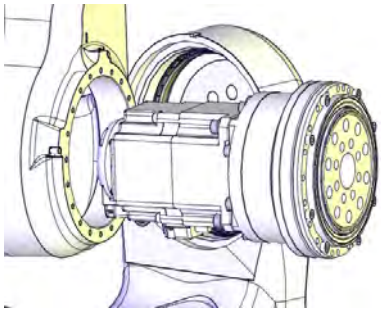 xx1300002555

Continues on next page

© Copyright 2014 - 2017 ABB. All rights reserved.

4.4.1 Replacing the lower arm
Continued

Refitting the lower arm

Use these procedures to refit the lower arm.

Refitting the axis-2 drive unit

	Action	Note
1	Clean Room robots: clean the joints that have been opened. See *Replacing parts on the robot on page 138*	
2	Check if there is a sufficient amount of grease on the gear. Apply more grease, if needed.	Harmonic grease 4B No. 2: 3HAC037302-001. LUBRIPLATE SYNXTREME FG-0: 3HAC043771-001 (for robots with food grade lubrication).
3	**For robots with protection class IP67 (option 287-10)** **For robots with protection type Foundry Plus (option 287-3)** Remove residual locking liquid and other pollutants with cleaning agent Loctite 7063. Apply flange sealing Loctite 574 on the mounting surfaces of the lower arm. **Note** For Clean Room robots, wipe clean the overflowing Loctite 574 if there is any.	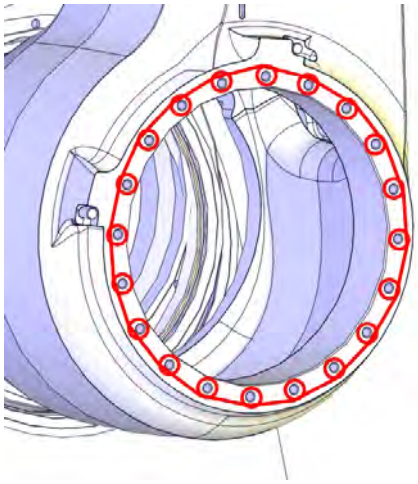 xx1400000006

Continues on next page

© Copyright 2014 - 2017 ABB. All rights reserved.

	Action	Note
4	Carefully insert the complete drive unit. **Note** Pay attention to the relative position between the motor connector block and the lower arm, so that the drive unit is positioned correctly inside the lower arm. 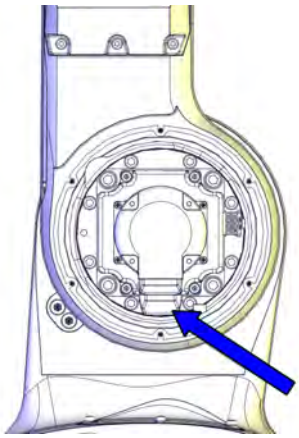 xx1400000795 The figure shows the position of the motor connector block when axis 2 is in position 0°.	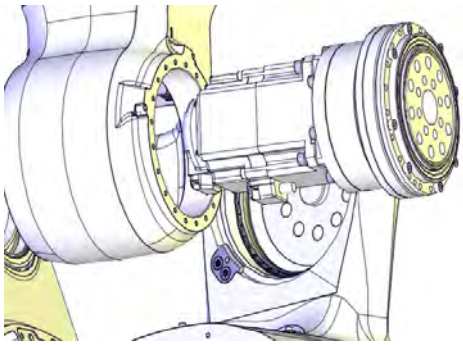 xx1300002580
5	If the gear is refitted in a hanging lower arm, this step requires two persons. • Person 1: Hold the lower arm still. • Person 2: Refit the drive unit screws. Secure the screws but do not tighten yet.	Screws: 3HAB3409-239 (M4x35). 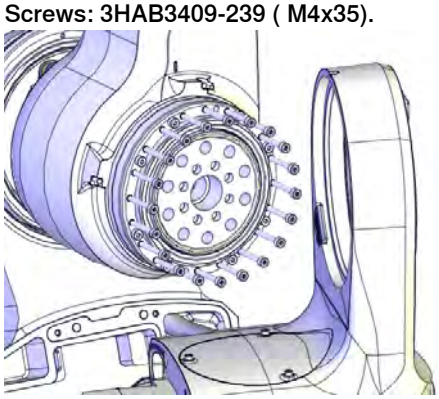 xx1300002554 **Note** Only use specified screws, never replace them with other screws.
6	If the drive unit is refitted in a hanging lower arm, this step requires two persons. • Person 1: Hold the lower arm still. • Person 2: Tighten the screws.	Tightening torque: 5 Nm

Continues on next page

© Copyright 2014 - 2017 ABB. All rights reserved.

4.4.1 Replacing the lower arm

Continued

	Action	Note
7	Clean Room robots: seal and paint the joints that have been opened. See *Replacing parts on the robot on page 138* **Note** After all repair work, wipe the robot free from particles with spirit on a lint free cloth.	

Refitting the lower arm

	Action	Note
1	For robots with protection type Clean Room: clean the joints that have been opened. See *Replacing parts on the robot on page 138*	
2	Check the o-ring. Replace if damaged.	O-ring: 3HAC048939-001 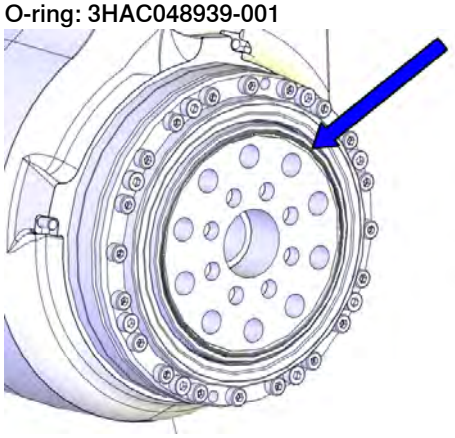 xx1300002556
3	Remove residual locking liquid and other pollutants with cleaning agent Loctite 7063. Apply flange sealing Loctite 574 to the cylindrical surface in the swing. **Note** For Clean Room robots, wipe clean the overflowing Loctite 574 if there is any.	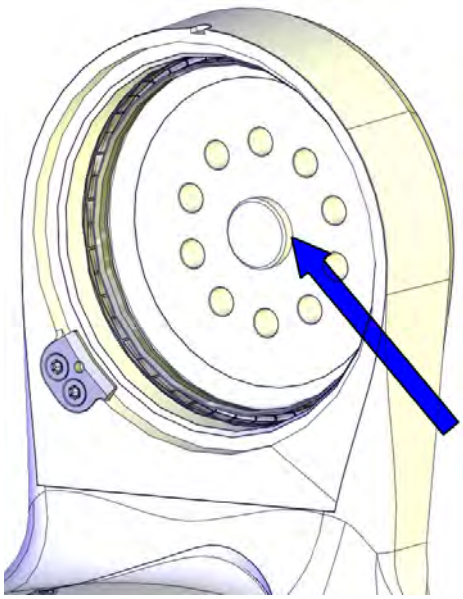 xx1400001403

Continues on next page

© Copyright 2014 - 2017 ABB. All rights reserved.

	Action	Note
4	Fit guide pins to the gearbox.	Guide pin for axis-2 gear unit: 3HAC049704-001 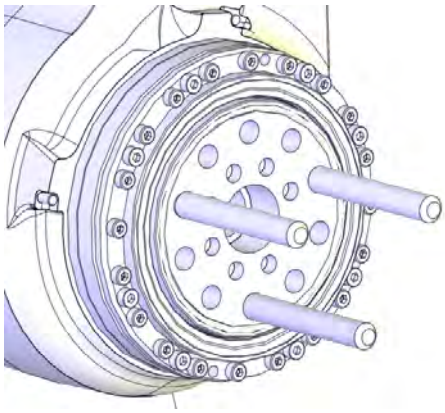 xx1300002562 Always use three guide pins together!
5	**For robots with protection class IP67 (option 287-10)** **For robots with protection type Foundry Plus (option 287-3)** Check the sealing. Replace if damaged. **CAUTION** Do not fit M2 variseal sealing on Clean Room robots.	M2 variseal sealing: 3HAC044641-003 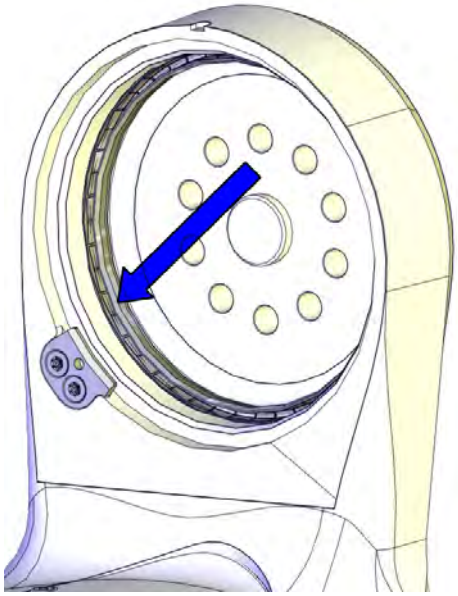 xx1400000453
6	Fit the lower arm to the swing, with guidance from the guide pins.	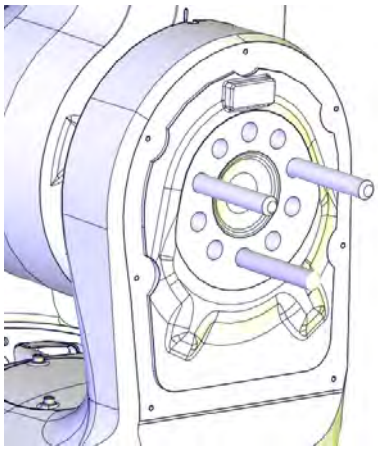 xx1300002563

Continues on next page

© Copyright 2014 - 2017 ABB. All rights reserved.

4.4.1 Replacing the lower arm

Continued

	Action	Note
7	Refit the lower arm screws and washers, using locking liquid Loctite 243. Secure the screws but do not tighten yet.	Screws: 3HAB3409-51 (M10x30). 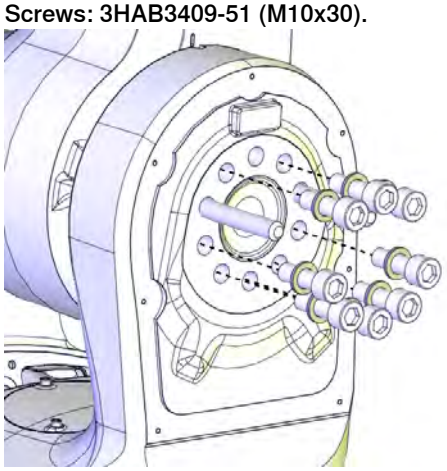 xx1300002564 **Note** Only use specified screws, never replace them with other screws.
8	Remove the guide pins and refit the remaining screws and washers using locking liquid Loctite 243.	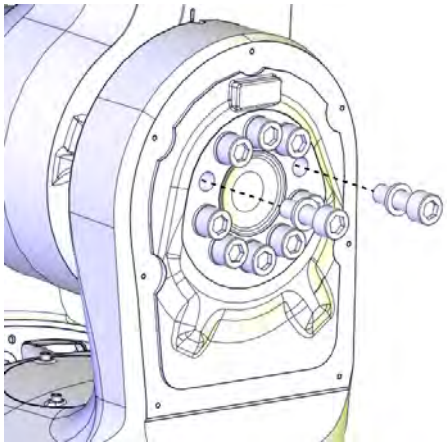 xx1300002565
9	Tighten all screws.	Tightening torque: 45 Nm

Continues on next page

© Copyright 2014 - 2017 ABB. All rights reserved.

	Action	Note
10	**For robots with protection class IP67 (option 287-10)** **For robots with protection type Foundry Plus (option 287-3)** **For robots with with protection type Clean Room** **For robots with food grade lubrication** Check the swing cover gasket. Replace if damaged.	Gasket on swing cover: 3HAC056727-001 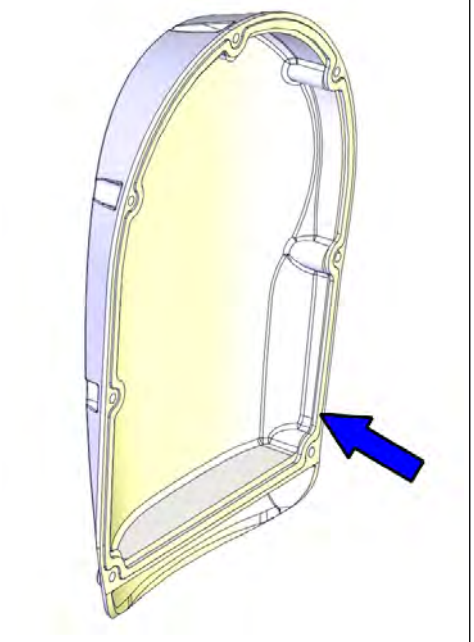 xx1400000007
11	Refit the swing cover. Replace if damaged.	Screws: 3HAB3409-207 (M3x8). Tightening torque: 1.5 Nm. Swing cover: 3HAC059676-001 : 3HAC056215-001 (used with protection type Clean Room) Swing cover, Clean Room Swing cover, food grade lubrication 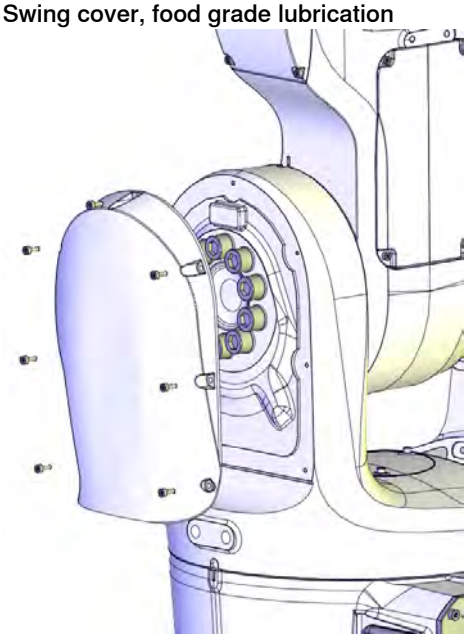 xx1300002551

Continues on next page

© Copyright 2014 - 2017 ABB. All rights reserved.

4.4.1 Replacing the lower arm

Continued

	Action	Note
12	**For robots with protection type Foundry Plus (option 287-3)** Check the protection plugs for lifting holes. Replace if damaged.	Protection plug for lifting holes: 3HAC4836-24 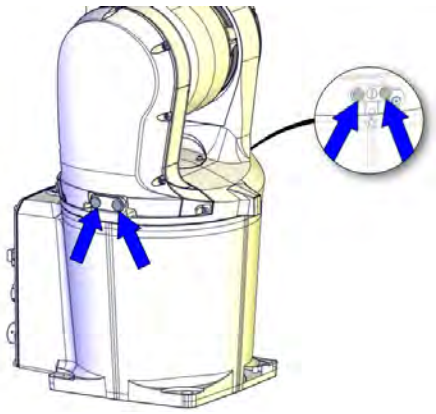 xx1600001151
13	**For robots with protection type Clean Room** Apply a string of the sealant Sikaflex 521FC to the joint of the swing cover. Smooth out the sealant string using a finger tip. Use washing-up on finger tips to get a smooth joint. If necessary, add extra sealant to get a full cover joint.	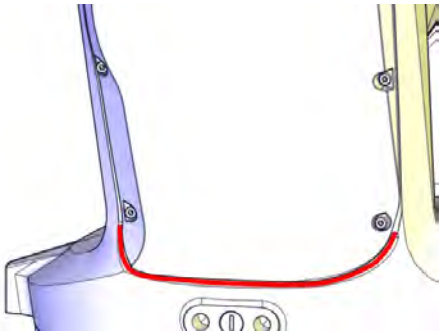 xx1600000217
14	**For robots with protection type Foundry Plus (option 287-3)** If required, fit two screws for protection.	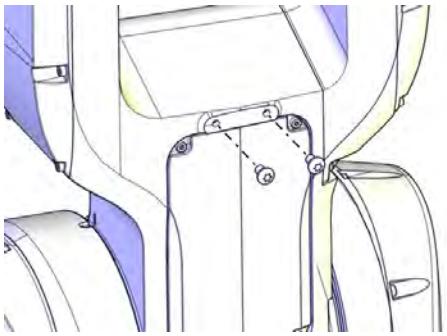 xx1600001154
15	For robots with protection type Clean Room: seal and paint the joints that have been opened. See *Replacing parts on the robot on page 138* **Note** After all repair work, wipe the robot free from particles with spirit on a lint free cloth.	

Continues on next page

© Copyright 2014 - 2017 ABB. All rights reserved.

Refitting the upper arm

	Action	Note
1	Clean Room robots: clean the joints that have been opened. See *Replacing parts on the robot on page 138*	
2	Fit guide pins to the axis-3 gear unit.	Guide pin for upper arm: 3HAC049705-001 Always use three guide pins together! 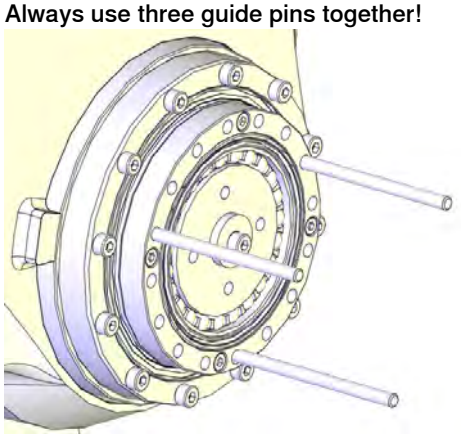 xx1400000027
3	**For robots with protection class IP67 (option 287-10)** **For robots with protection type Foundry Plus (option 287-3)** Check the sealing. Replace if damaged. **CAUTION** Do not fit M2 variseal sealing on Clean Room robots.	M2 variseal sealing: 3HAC044641-005 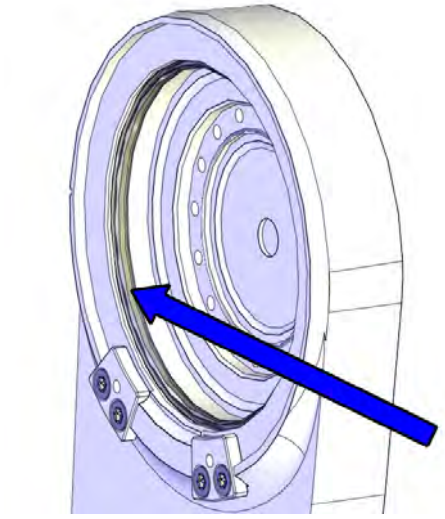 xx1400000474

Continues on next page

© Copyright 2014 - 2017 ABB. All rights reserved.

4.4.1 Replacing the lower arm

Continued

	Action	Note
4	Refit the upper arm to the lower arm and secure with the upper arm screws and washers. Do not tighten yet.	Screws: 3HAB3409-213 (M4x25). 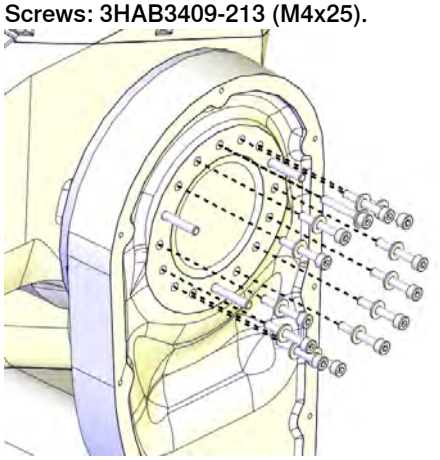 xx1400000028 **Note** Only use specified screws, never replace them with other screws.
5	Remove the guide pins and refit the remaining screws and washers.	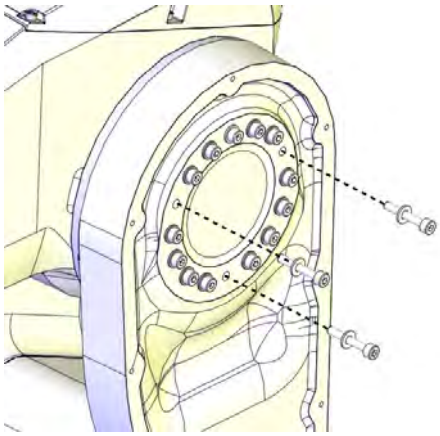 xx1400000029
6	Tighten all screws.	Tightening torque: 4.5 Nm.

Continues on next page

© Copyright 2014 - 2017 ABB. All rights reserved.

	Action	Note
7	**For robots with protection class IP67 (option 287-10)** **For robots with protection type Foundry Plus (option 287-3)** **For robots with with protection type Clean Room** **For robots with food grade lubrication** Check the lower arm cover gasket. Replace if damaged.	Gasket on lower arm cover: 3HAC056725-001 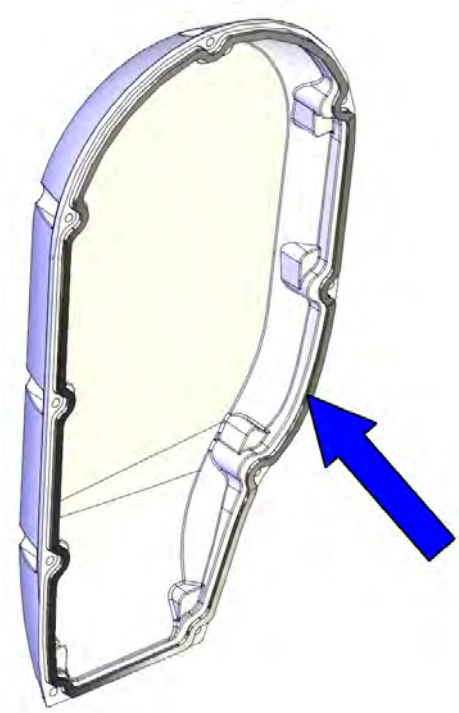 xx1400000047
8	Refit the lower arm cover.	Screws: 3HAB3409-207 (M3x8). Tightening torque: 1.5 Nm. 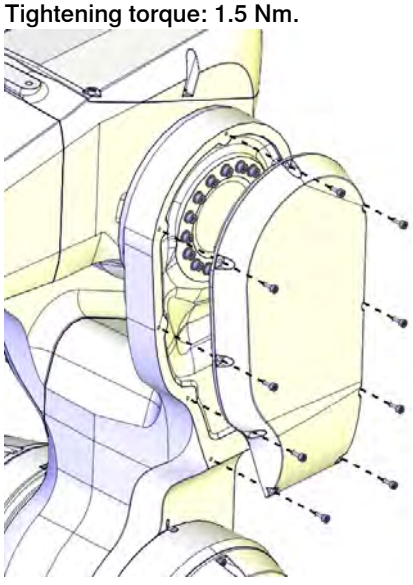 xx1300002528 **Note** Only use specified screws, never replace them with other screws.

Continues on next page

© Copyright 2014 - 2017 ABB. All rights reserved.

4.4.1 Replacing the lower arm

Continued

	Action	Note
9	**For robots with protection class IP67 (option 287-10)** **For robots with protection type Foundry Plus (option 287-3)** **For robots with with protection type Clean Room** **For robots with food grade lubrication** Check the cable housing gasket. Replace if damaged.	Gasket on lower arm cable housing: 3HAC044895-001 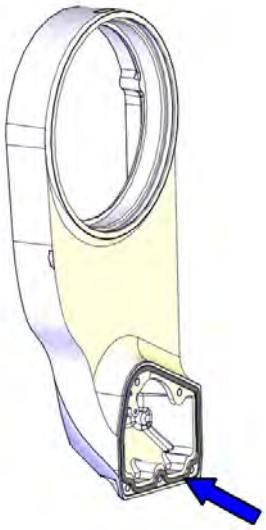 xx1400000414
10	**For robots with protection class IP67 (option 287-10)** **For robots with protection type Foundry Plus (option 287-3)** **For robots with with protection type Clean Room** **For robots with food grade lubrication** Check the axis-3 radial sealing and the M2 variseal sealing in the cable housing. Replace if damaged. **Note** The M2 variseal sealing does not used for robots with protection type Clean room and with food grade lubrication. **Note** For Clean Room robots, apply a little grease to the sealing when replacing the radial sealing and wipe clean after the replacement. **CAUTION** Do not fit M2 variseal sealing on Clean Room robots.	M2 variseal sealing: 3HAC044641-006 Radial sealing: 3HAC024865-001 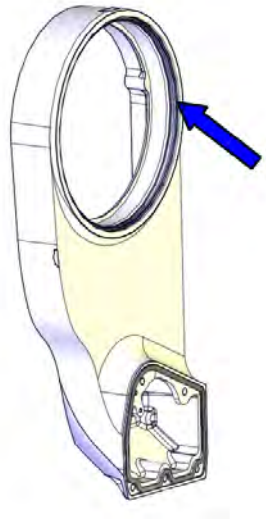 xx1400000473 Replacement is detailed in *Replacing the axis-3 radial sealing and sealing ring on page 374*.

Continues on next page

© Copyright 2014 - 2017 ABB. All rights reserved.

	Action	Note
11	Refit the cable housing of the lower arm.	Tightening torque: 3 Nm 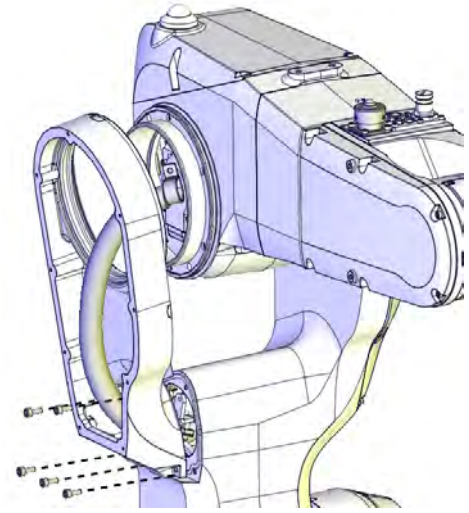 xx1400000785
12	**For robots with protection type Clean Room** Apply a string of the sealant Sikaflex 521FC to the joint of the cable housing of the lower arm. Smooth out the sealant string using a finger tip. Use washing-up on finger tips to get a smooth joint. If necessary, add extra sealant to get a full cover joint. **Note** No sealing is required in the cavities of the three lower screws highlighted with a ring in the figure.	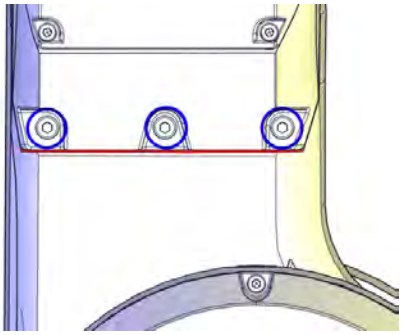 xx1600000218
13	**For robots with protection type Foundry Plus (option 287-3)** If required, fit two screws for protection.	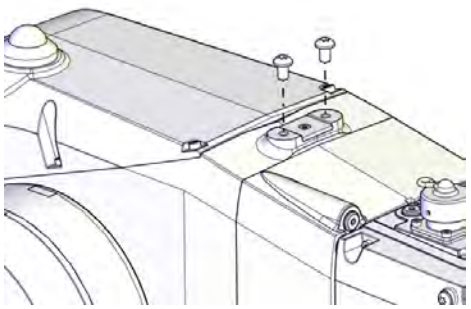 xx1600001155
14	Clean Room robots: seal and paint the joints that have been opened. See *Replacing parts on the robot on page 138* **Note** After all repair work, wipe the robot free from particles with spirit on a lint free cloth.	

Continues on next page

© Copyright 2014 - 2017 ABB. All rights reserved.

4.4.1 Replacing the lower arm

Continued

Refitting the cable package in the lower arm

	Action	Note
1	Clean Room robots: clean the joints that have been opened. See *Replacing parts on the robot on page 138*	
2	Check the axis-2 sealing ring. **For robots with protection class IP67 (option 287-10)** **For robots with protection type Foundry Plus (option 287-3)** **For robots with with protection type Clean Room** **For robots with food grade lubrication** Check the gasket. Replace if damaged.	Axis-2 sealing ring: 3HAC044677-001 Gasket of axis-2 sealing ring: 3HAC045688-001 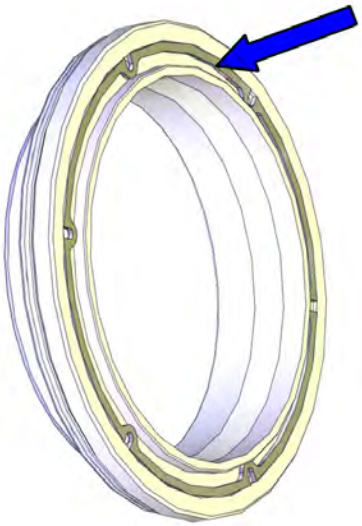 xx1400000476
3	**For robots with protection class IP67 (option 287-10)** **For robots with protection type Foundry Plus (option 287-3)** **For robots with with protection type Clean Room** **For robots with food grade lubrication** Check the gasket of the cable housing plastic plate. Replace if damaged.	Gasket of plastic plate: 3HAC044894-001 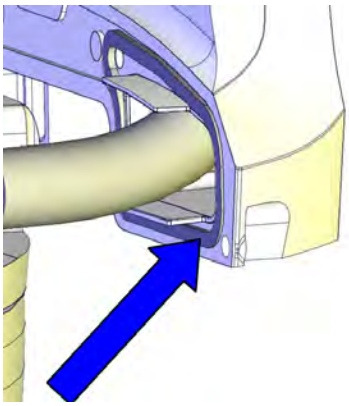 xx1400000457

Continues on next page

© Copyright 2014 - 2017 ABB. All rights reserved.

	Action	Note
4	Fetch the cable housing, the plastic plate and the axis-2 sealing ring and run the cable package through them.	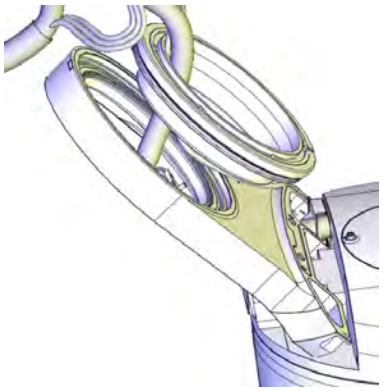 xx1400000025
5	Fasten the plastic plate to the cable housing, if removed. Replace if damaged.	The plastic plate is included in: Cable harness material set: 3HAC049663-001. 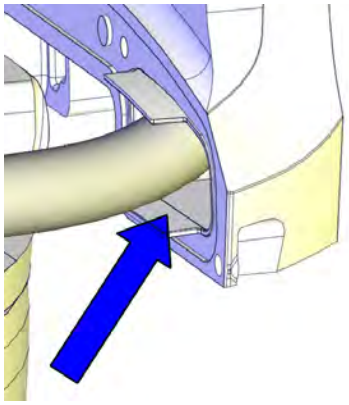 xx1400000023

Continues on next page

© Copyright 2014 - 2017 ABB. All rights reserved.

4.4.1 Replacing the lower arm

Continued

	Action	Note
6	**For robots with protection class IP67 (option 287-10)** **For robots with protection type Foundry Plus (option 287-3)** Check the sealing. Replace if damaged. **CAUTION** Do not fit M2 variseal sealing on Clean Room robots.	M2 variseal sealing: 3HAC044641-004 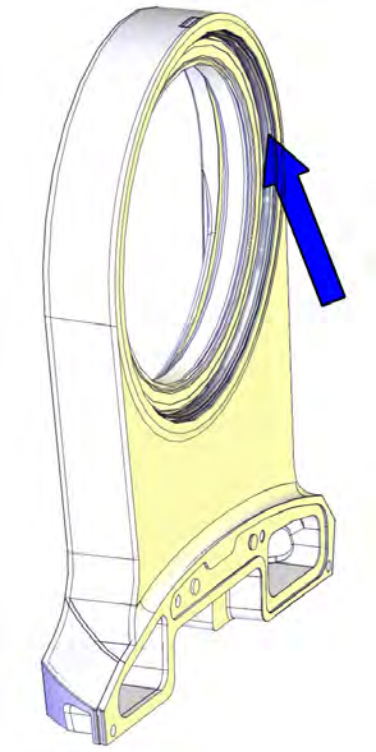 xx1400000454

Continues on next page

© Copyright 2014 - 2017 ABB. All rights reserved.

	Action	Note
7	**For robots with protection class IP67 (option 287-10)** **For robots with protection type Foundry Plus (option 287-3)** **For robots with with protection type Clean Room** **For robots with food grade lubrication** Check the radial sealing. Replace if damaged. **Note** For Clean Room robots, apply a little grease to the sealing when replacing the radial sealing and wipe clean after the replacement.	Radial sealing with dust lip: 3HAB3701-41 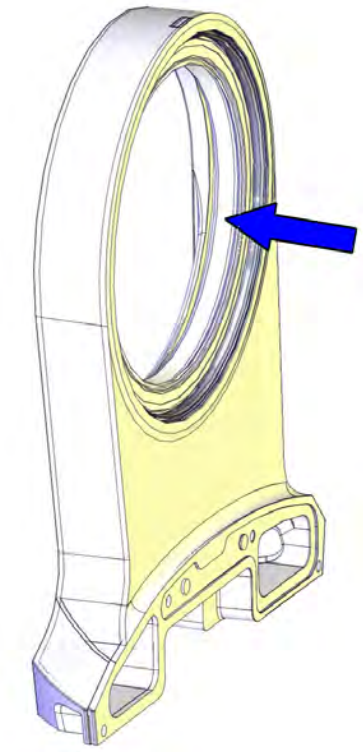 xx1400000753 Replacement is detailed in *Replacing the swing spare parts (swing, axis-2 radial sealing) on page 518*.
8	Guide the cable package into the lower arm. **Tip** There is a groove on the lower arm casting that simplifies cable passage, if needed. Its position can easily be felt by hand.	
9	Refit the axis-2 sealing ring with the screws.	Tightening torque: 1.5 Nm. 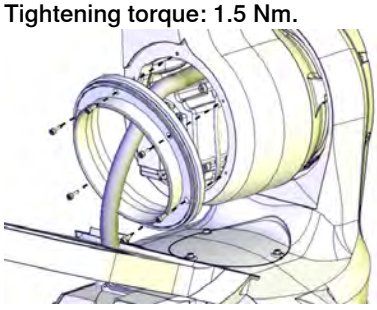 xx1400000020

Continues on next page

© Copyright 2014 - 2017 ABB. All rights reserved.

4.4.1 Replacing the lower arm

Continued

	Action	Note
10	Refit the cable housing with the screws.	Screws: 3HAB3409-236 (M4x10). Tightening torque: 3 Nm. 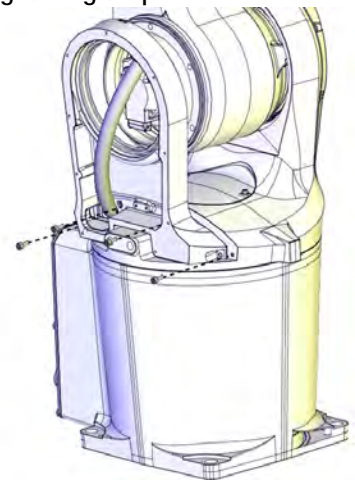 xx1300002435 **Note** Only use specified screws, never replace them with other screws.
11	Apply grease to the cable package, cover all moving area of the package.	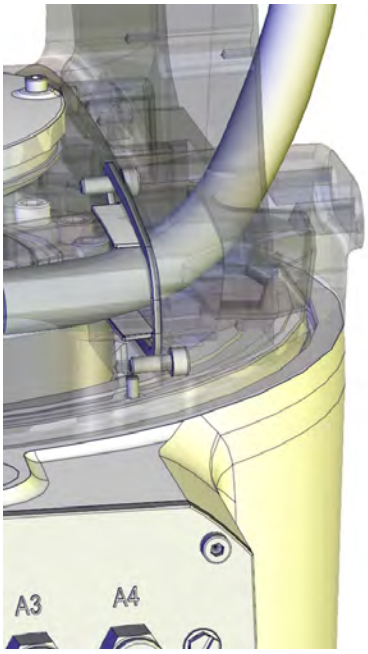 xx1400000481

Continues on next page

© Copyright 2014 - 2017 ABB. All rights reserved.

	Action	Note
12	Reconnect the motor connectors. • R2.ME2 • R2.MP2	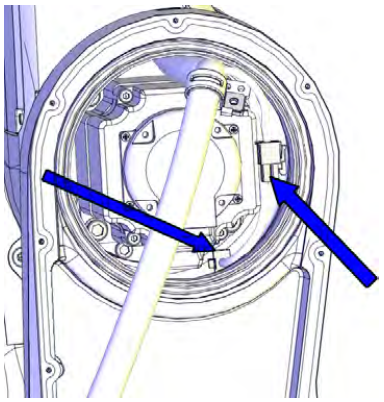 xx1300002434
13	Refit the axis-2 motor bracket to the cable package with the two screws. **CAUTION** Do not loosen the cable clamp screw! There is a risk of rearrangement of the cable layout which would result in shortened lifetime of the cable harness.	Tightening torque: 1.5 Nm. 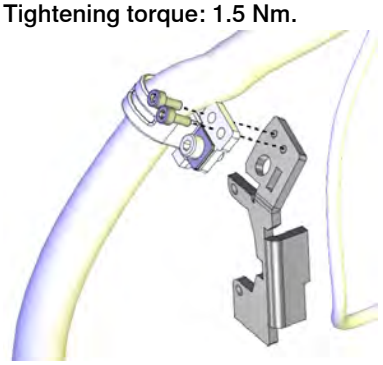 xx1400000021
14	Refit the axis-2 motor bracket to the motor.	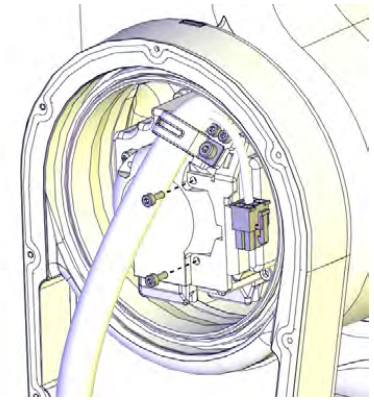 xx1300002432

Continues on next page

© Copyright 2014 - 2017 ABB. All rights reserved.

4.4.1 Replacing the lower arm

Continued

	Action	Note
15	Secure the connector R2.MP2 and its cable with cable straps onto the motor bracket. Make sure the connector is fixed by its tab to the bracket.	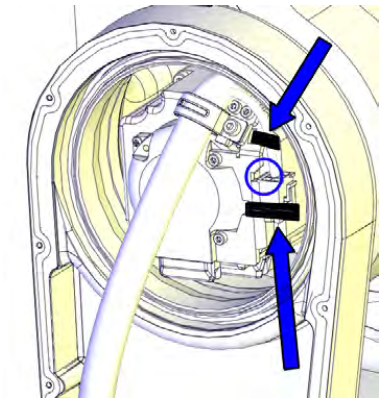 xx1400001529
16	Apply grease to the cable package, cover all moving area of the package.	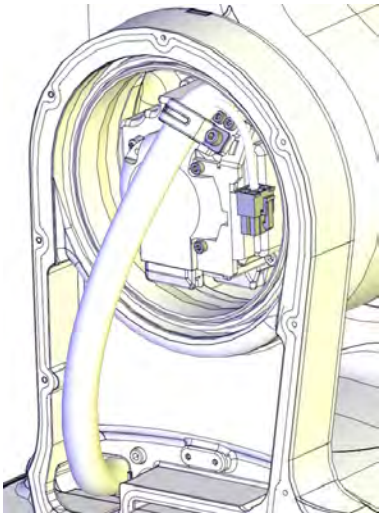 xx1400000482
17	In order to keep the cabling away from the hot axis-2 motor, the cable package must be secured accordingly inside the EIB/SMB cavity: 1 The cable package is strapped with tape by the supplier at two locations. Put a cable strap around the cable package at each location. 2 Insert a third cable strap through the top strap and the bottom strap, and close the strap to secure the cable package and keep it in place. See the figure.	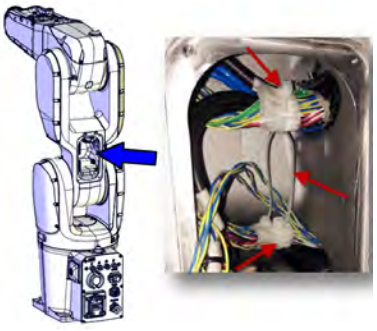 xx1400001131

Continues on next page

© Copyright 2014 - 2017 ABB. All rights reserved.

	Action	Note
18	**For robots with protection class IP67 (option 287-10)** **For robots with protection type Foundry Plus (option 287-3)** **For robots with with protection type Clean Room** **For robots with food grade lubrication** Check the gasket of the cable housing cover. Replace if damaged.	Gasket on cable housing cover: 3HAC056726-001 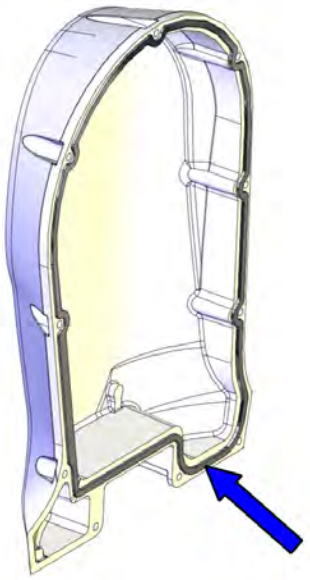 xx1400000424
19	Check the PTFE film. Replace if damaged.	PTFE film on cable housing cover: 3HAC044660-001
20	Apply grease to the inner surface of the cable housing cover and to the PTFE film surface.	

Continues on next page

© Copyright 2014 - 2017 ABB. All rights reserved.

4.4.1 Replacing the lower arm

Continued

	Action	Note
21	Refit the cable housing cover. Replace if damaged. **Note** Remember to refit the two lower screws shown in the figure.	Cable housing cover of the swing: 3HAC059678-001 : 3HAC056214-001 (used with protection type Clean Room) Cable housing cover of the swing, Clean Room Cable housing cover of the swing, food grade lubrication Screws: 3HAB3409-207 (M3x8). Tightening torque: 1.5 Nm. 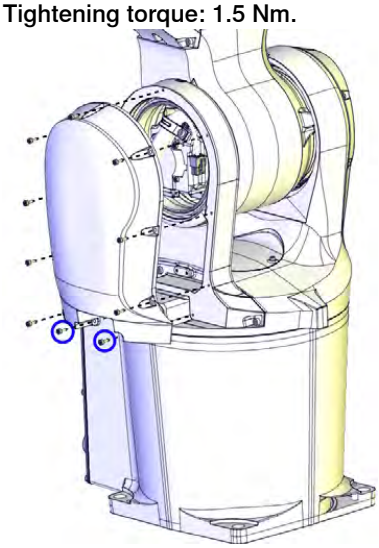 xx1300002431 **Note** Only use specified screws, never replace them with other screws.
22	**For robots with protection type Foundry Plus (option 287-3)** Check the protection plugs for lifting holes. Replace if damaged.	Protection plug for lifting holes: 3HAC4836-24 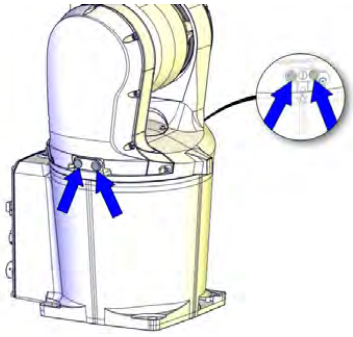 xx1600001151

Continues on next page

© Copyright 2014 - 2017 ABB. All rights reserved.

	Action	Note
23	**For robots with with protection type Clean Room** **For robots with food grade lubrication** Refit the swing sealing plug. Follow the procedure specified in *Refitting the swing sealing plug on page 145*.	Swing sealing plug:3HAC053687-001 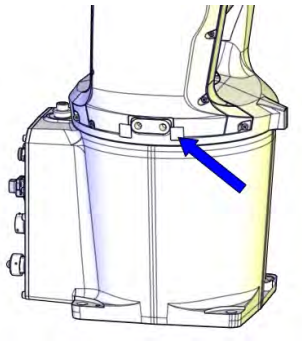 xx1600000205
24	Refit the lower arm bracket to the cable package. **CAUTION** Do not loosen the cable clamp screw! There is a risk of rearrangement of the cable layout which would result in shortened lifetime of the cable harness.	Tightening torque: 1.5 Nm. 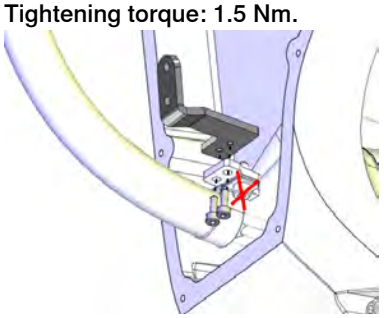 xx1300002430
25	Clean Room robots: seal and paint the joints that have been opened. See *Replacing parts on the robot on page 138* **Note** After all repair work, wipe the robot free from particles with spirit on a lint free cloth.	

Connecting the cabling in the lower arm

	Action	Note
1	**ELECTROSTATIC DISCHARGE (ESD)** The unit is sensitive to ESD. Before handling the unit please read the safety information in the section *WARNING - The unit is sensitive to ESD! on page 50*	
2	Clean Room robots: clean the joints that have been opened. See *Replacing parts on the robot on page 138*	

Continues on next page

© Copyright 2014 - 2017 ABB. All rights reserved.

4.4.1 Replacing the lower arm

Continued

	Action	Note
3	**For robots with protection class IP67 (option 287-10)** **For robots with protection type Foundry Plus (option 287-3)** **For robots with with protection type Clean Room** **For robots with food grade lubrication** Check the EIB/SMB cover gasket. Replace if damaged.	Gasket on EIB/SMB cover: 3HAC056728-001 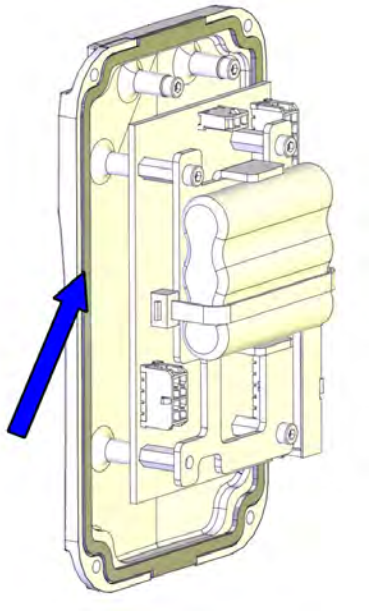 xx1400000475
4	**Valid for IRB 1200 (no type specified) and IRB 1200 Type A** Connect the connectors to the EIB unit. • R1.ME1-3 • R1.ME4-6 • R2.EIB **WARNING** Make sure not to mix the R2.EIB and R2.ME2. Axis 2 may be severely damaged. See the labels on the connectors for correct connection.	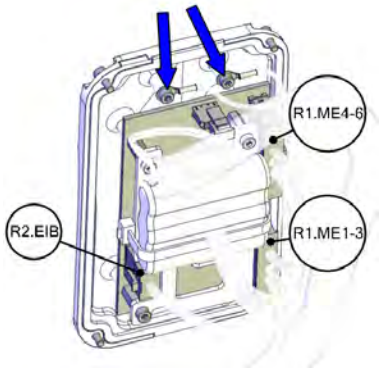 xx1300002428
5	**Valid for IRB 1200 (no type specified) and IRB 1200 Type A** Connect the lugs to the EIB/SMB cover.	
6	**Valid for IRB 1200 Type B** Connect the connectors to the SMB unit. • R1.ME1,2,4,5 • R1.ME3,6 • R2.SMB **WARNING** Make sure not to mix the R2.SMB and R2.ME2. Axis 2 may be severely damaged. See the labels on the connectors for correct connection.	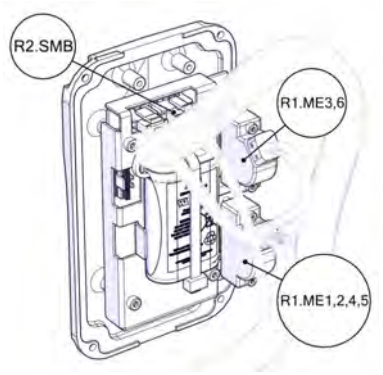 xx1700000005

Continues on next page

© Copyright 2014 - 2017 ABB. All rights reserved.

	Action	Note
7	**Valid for IRB 1200 Type B** Tighten the connector screws.	Tightening torque: 0.3 Nm 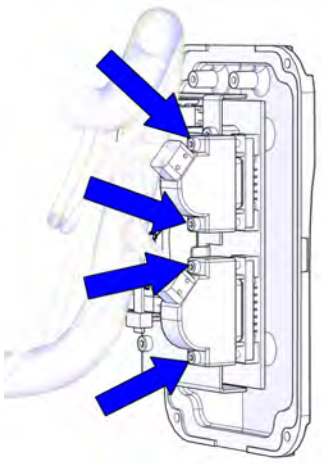 xx1700000004
8	Refit the EIB/SMB cover to the lower arm with the attachment screws.	Screws: 3HAB3409-207 (M3x8). Tightening torque: 1.5 Nm 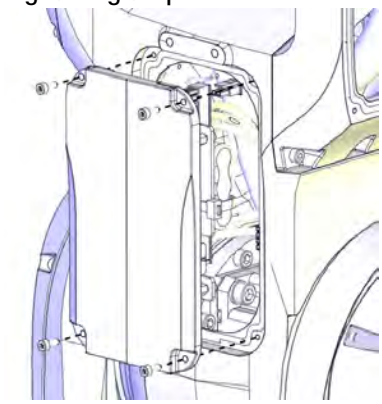 xx1300002427 **Note** Only use specified screws, never replace them with other screws.

Continues on next page

© Copyright 2014 - 2017 ABB. All rights reserved.

4.4.1 Replacing the lower arm

Continued

	Action	Note
9	Refit the fix sheet attachment screws in the lower arm.	Tightening torque: 1.5 Nm. 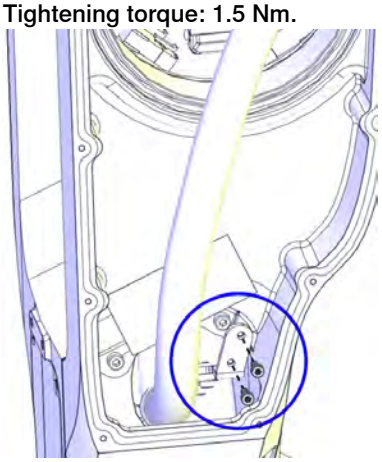 xx1300002426
10	Clean Room robots: seal and paint the joints that have been opened. See *Replacing parts on the robot on page 138* **Note** After all repair work, wipe the robot free from particles with spirit on a lint free cloth.	

Refitting the cable package in the housing

	Action	Note
1	Clean Room robots: clean the joints that have been opened. See *Replacing parts on the robot on page 138*	
2	Before guiding the cable package into the housing and upper arm, apply grease to the cable package, to the area going into the upper arm, shown in the figure. Cover all moving area of the package.	Area to be lubricated, shown in cable package already fitted to the housing. 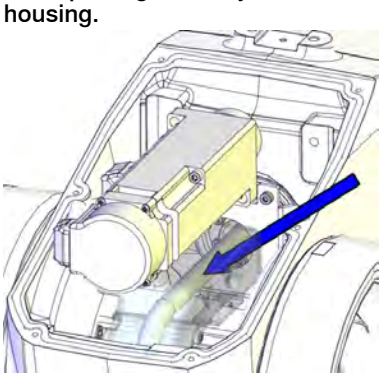 xx1400000483

Continues on next page

© Copyright 2014 - 2017 ABB. All rights reserved.

	Action	Note
3	Guide the cable package into the upper arm, through the housing. **Note** Guide the air hoses (A) underneath the bottom side of the axis-3 motor and the axis-3 motor cables (B) on top of the motor, see cable layout figure. The fix point of the air hoses is pre-determined (marked) and must be matched against the air hose holder on the left side of the axis-3 motor. **Note** The air hose holder keeps the air hoses arranged in an optimized way. It is necessary to keep the air hose holder vertically and firmly against the left side of the axis-3 motor.	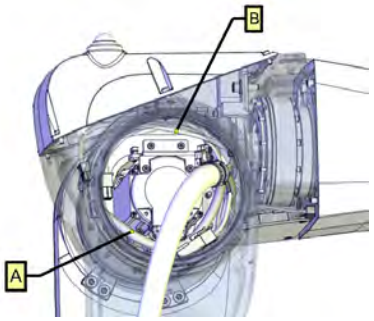 xx1400001472
4	Refit the bracket to the sheet with two screws. **CAUTION** Do not loosen the cable clamp screw! There is a risk of rearrangement of the cable layout which would result in shortened lifetime of the cable harness.	Tightening torque: 1.5 Nm. 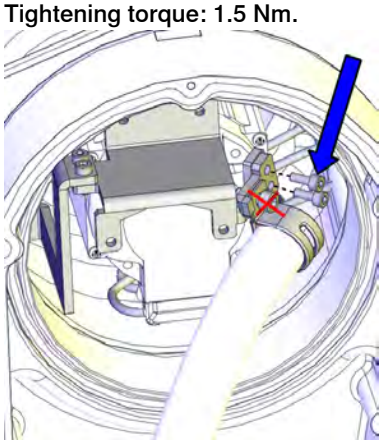 xx1300002424
5	Refit the fix sheet to the motor.	Tightening torque: 1.5 Nm. 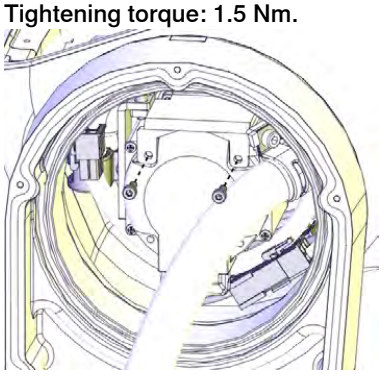 xx1300002423

Continues on next page

© Copyright 2014 - 2017 ABB. All rights reserved.

4.4.1 Replacing the lower arm

Continued

	Action	Note
6	Refit the fix sheet to the inner plastic guide.	Tightening torque: 1.5 Nm. 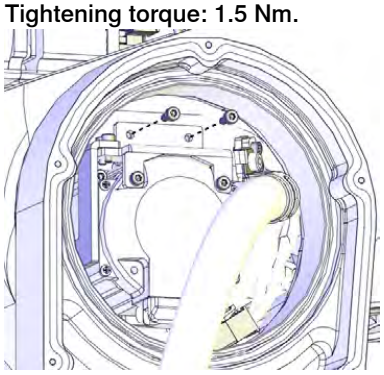 xx1300002421
7	Fit the air hose holder to the bracket. Replace the holder, if damaged. **Tip** If the air hose holder is difficult to fit, firstly remove the bracket from the fix sheet by removing the two M3 screws. Fit the holder to the bracket and then refit the complete assembly to the fix sheet again. Tightening torque for the two M3 screws: 1.5 Nm. 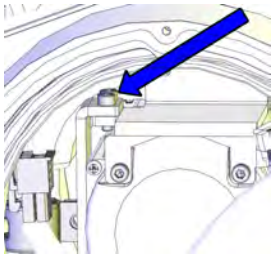 xx1400001133	Air hose holders are included in Cable harness material set (3HAC049663-001). Tightening torque: 4 Nm. 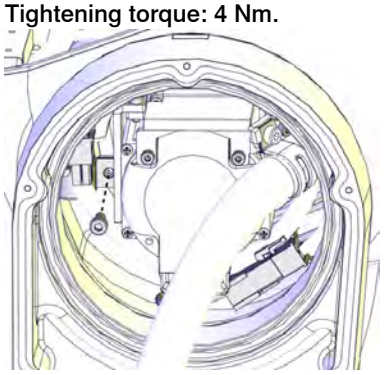 xx1300002422
8	Reconnect the axis-3 motor connectors.	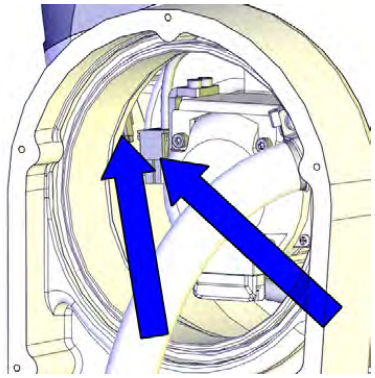 xx1300002420

Continues on next page

© Copyright 2014 - 2017 ABB. All rights reserved.

	Action	Note
9	Apply grease to the cable package, cover all moving area of the package.	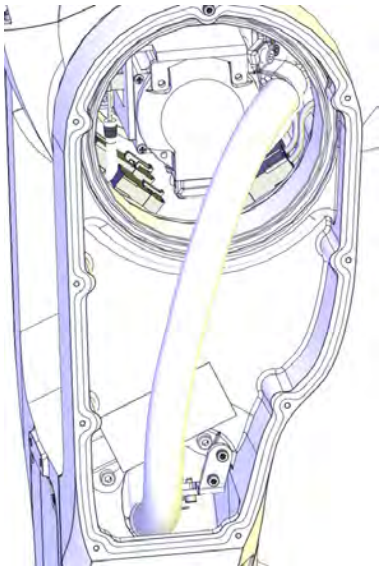 xx1400000754
10	**Valid for IRB 1200-5/0.9** Secure the cable package at the bottom of the housing with cable straps.	
11	Clean Room robots: seal and paint the joints that have been opened. See *Replacing parts on the robot on page 138* **Note** After all repair work, wipe the robot free from particles with spirit on a lint free cloth.	

Connecting the axis-4 motor connectors

	Action	Note
1	Reconnect the motor connectors.	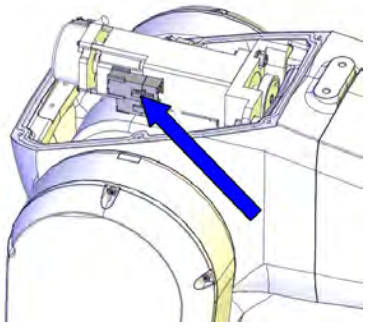 xx1300002371

Continues on next page

© Copyright 2014 - 2017 ABB. All rights reserved.

4.4.1 Replacing the lower arm

Continued

	Action	Note
2	Secure the connectors to the motor with a cable strap.	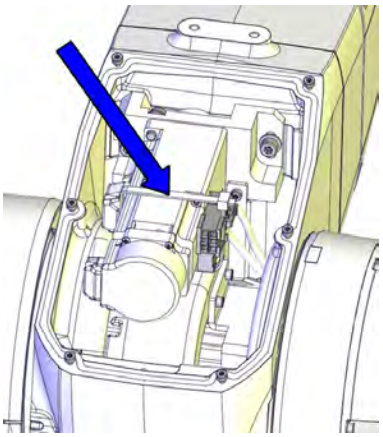 xx1300002494

Connecting the axis-4 FPC connectors

	Action	Note
1	Clean Room robots: clean the joints that have been opened. See *Replacing parts on the robot on page 138*	
2	Reconnect the FPC connectors. **Tip** See the number markings on the connectors for help to find the corresponding connector.	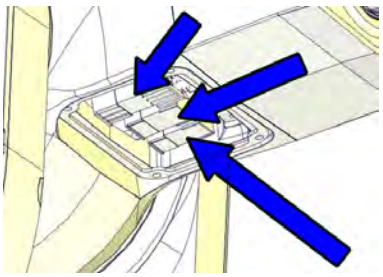 xx1300002399

Continues on next page

© Copyright 2014 - 2017 ABB. All rights reserved.

	Action	Note
3	Reconnect the FPC connectors and push them into place inside the housing. **Tip** See the number markings on the connectors for help to find the corresponding connector.	Cable layout in IRB 1200-7/0.7 : 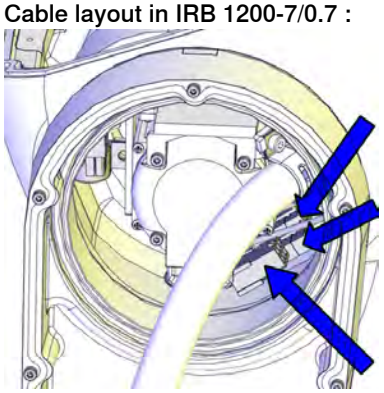 xx1300002412 Cable layout in IRB 1200-5/0.9 : 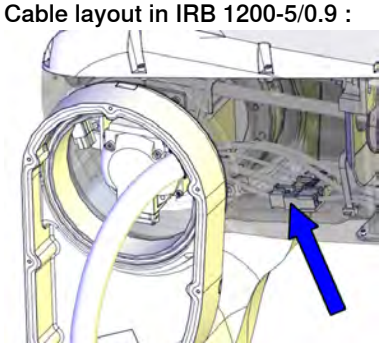 xx1400001471
4	Remove residual locking liquid and other pollutants with cleaning agent Loctite 7063.	

Continues on next page

© Copyright 2014 - 2017 ABB. All rights reserved.

4.4.1 Replacing the lower arm

Continued

	Action	Note
5	**For robots with protection class IP67 (option 287-10)** **For robots with protection type Foundry Plus (option 287-3)** Apply flange sealing Sikaflex 521FC on the mounting surfaces of the small cover on the housing.	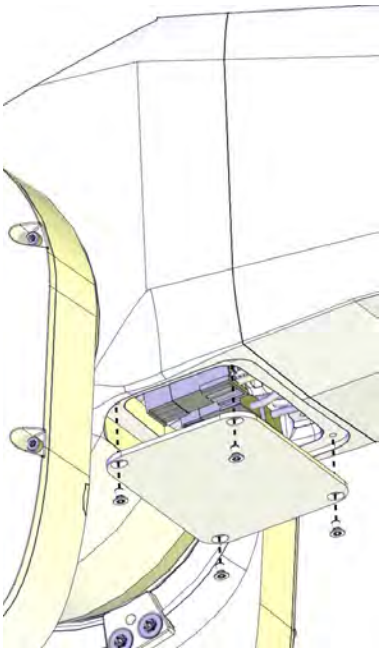 xx1300002398 Housing small cover: 3HAC059684-001 : 3HAC056142-001 (used with protection type Clean Room) Housing small cover, Clean Room Housing small cover, food grade lubrication Screws: 3HAC14286-4 (M3X5). Tightening torque: 1 Nm.
6	Refit the small cover to the housing. Replace if damaged.	
7	**For robots with protection type Clean Room** Apply a string of the sealant Sikaflex 521FC to the joint of the small cover on the housing. Smooth out the sealant string using a finger tip. Use washing-up on finger tips to get a smooth joint. If necessary, add extra sealant to get a full cover joint.	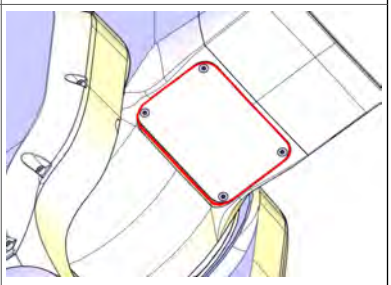 xx1600000214

Continues on next page

© Copyright 2014 - 2017 ABB. All rights reserved.

	Action	Note
8	Refit the plate.	Tightening torque: 1.5 Nm. 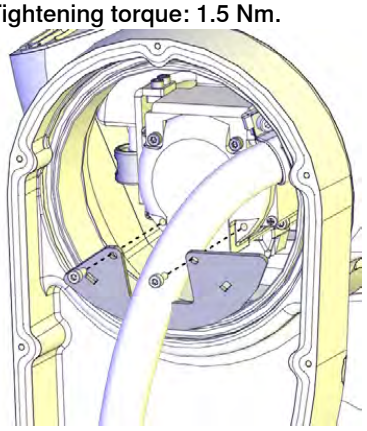 xx1300002413
9	Check the PTFE film on the cable housing. Replace if damaged.	PTFE film on lower arm cable housing: 3HAC044710-001 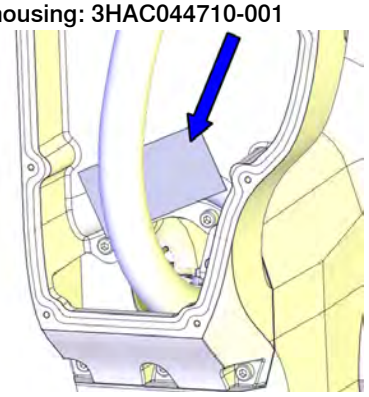 xx1400000740

Continues on next page

© Copyright 2014 - 2017 ABB. All rights reserved.

4.4.1 Replacing the lower arm

Continued

	Action	Note
10	**For robots with protection class IP67 (option 287-10)** **For robots with protection type Foundry Plus (option 287-3)** **For robots with with protection type Clean Room** **For robots with food grade lubrication** Check the gasket of the cable housing cover. Replace if damaged.	Gasket on cable housing cover: 3HAC056724-001 PTFE film on cable housing cover: 3HAC044660-001 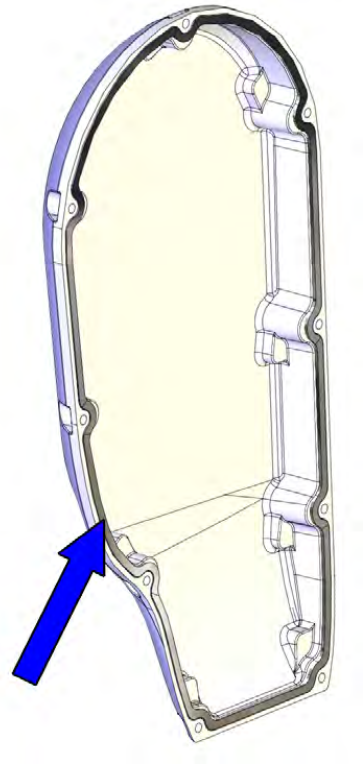 xx1400000048
11	Check the PTFE film on the cable housing cover. Replace if damaged.	
12	Apply grease to the inner surface of the cable housing cover and the PTFE film surface.	

Continues on next page

© Copyright 2014 - 2017 ABB. All rights reserved.

	Action	Note
13	Refit the cable housing cover.	Screws: 3HAB3409-207 (M3x8). Tightening torque: 1.5 Nm 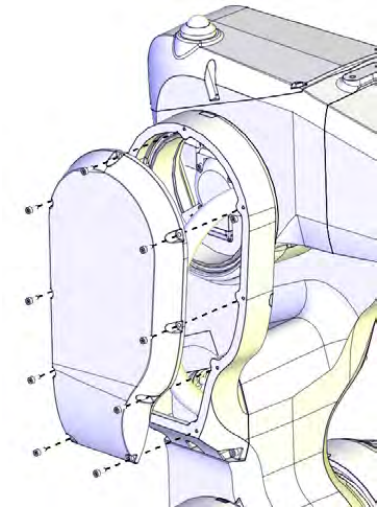 xx1300002400 **Note** Only use specified screws, never replace them with other screws.
14	Clean Room robots: seal and paint the joints that have been opened. See *Replacing parts on the robot on page 138* **Note** After all repair work, wipe the robot free from particles with spirit on a lint free cloth.	

Connecting the air hoses and CP/CS cabling (if equipped)

	Action	Note
1	Reconnect the air hoses.	Air connector set with Ethernet hole in flange: 3HAC049664-001 Air connector set without Ethernet hole in flange: 3HAC049665-001 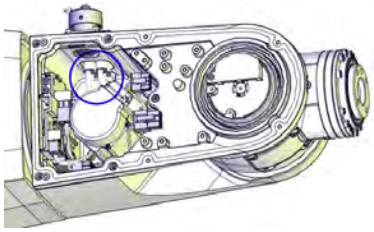 xx1400000738

Continues on next page

© Copyright 2014 - 2017 ABB. All rights reserved.

4.4.1 Replacing the lower arm

Continued

	Action	Note
2	If equipped, reconnect the CP/CS connector. **For robots with protection class IP67 (option 287-10)** **For robots with protection type Foundry Plus (option 287-3)** 1 Check the gasket. 2 Replace if damaged. **For robots with protection type Clean Room:** 1 Remove residual locking liquid and other pollutants with cleaning agent Loctite 7063. 2 Apply flange sealing Loctite 574 on the mounting surfaces of the CP/CS connector and wipe clean if there is any overflowing Loctite 574.	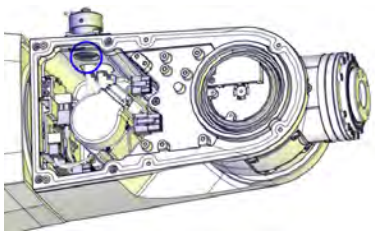 xx1500000252 On robots with protection class IP67 On robots with protection type Foundry Plus Gasket: 3HAC058567-001 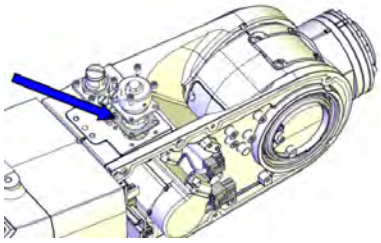 xx1500000251
3	**For robots with protection type Foundry Plus** If required, fit the protection bracket for CP/CS connectors.	Protection bracket for CP/CS connectors: 3HAC058350-001 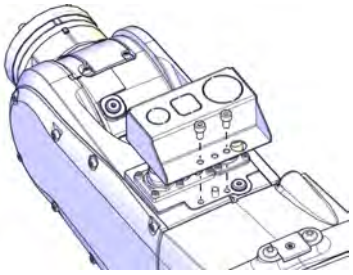 xx1600001152

Connecting the axis-5 motor FPC connectors

	Action	Note
1	Connect the axis-5 FPC connectors and snap them to their holders.	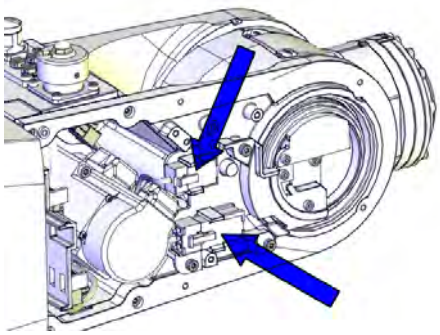 xx1300002390

Continues on next page

© Copyright 2014 - 2017 ABB. All rights reserved.

Connecting the axis-5 motor connectors

	Action	Note
1	Reconnect the motor cables. • R3.MP5 • R3.ME5	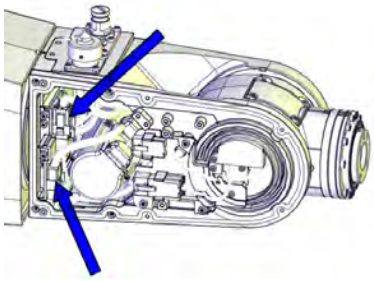 xx1300002360

Refitting the wrist covers

	Action	Note
1	Clean Room robots: clean the joints that have been opened. See *Replacing parts on the robot on page 138*	
2	**For robots with protection class IP67 (option 287-10)** **For robots with protection type Foundry Plus (option 287-3)** **For robots with with protection type Clean Room** **For robots with food grade lubrication** Check the tubular cover gasket. Replace if damaged.	Gasket for tubular cover: 3HAC058822-001 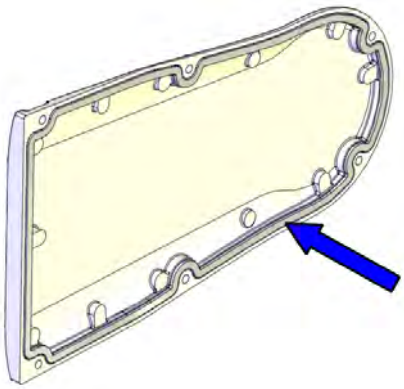 xx1400000034
3	**For robots with protection class IP67 (option 287-10)** **For robots with protection type Foundry Plus (option 287-3)** **For robots with with protection type Clean Room** **For robots with food grade lubrication** Check the tubular cable housing cover gasket. Replace if damaged.	Gasket for tubular cable housing cover: 3HAC056707-001 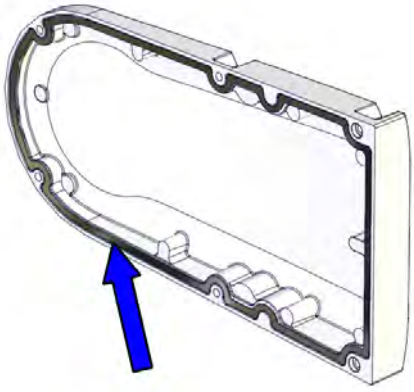 xx1400000345

Continues on next page

© Copyright 2014 - 2017 ABB. All rights reserved.

4.4.1 Replacing the lower arm

Continued

	Action	Note
4	Refit the both covers to the wrist. **For robots with protection class IP67 (option 287-10)** **For robots with protection type Foundry Plus (option 287-3)** Apply locking liquid Loctite 243 to the two front screws on the left hand side cover, encircled in the figure. Remember to refit the extra two screws and washers to the tubular cover. **For robots with protection type Clean Room** Remember to refit the extra two screws and washers to the tubular cover.	Screws: 3HAB3409-207 (M3x8). Tightening torque: 1.5 Nm. For robots with protection class IP67 (option 287-10) For robots with protection type Foundry Plus (option 287-3) 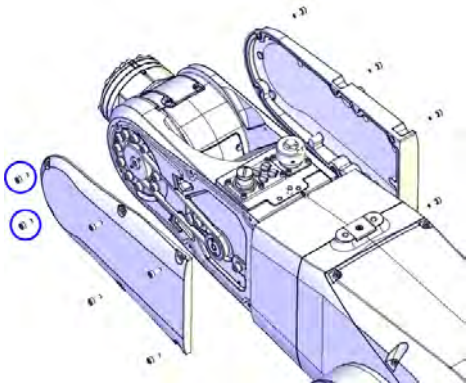 xx1300002349 For robots with protection type Clean Room 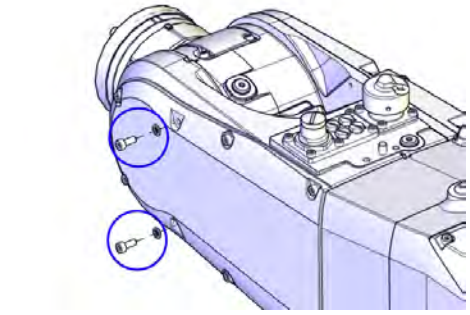 xx1600001153 **Note** Only use specified screws, never replace them with other screws.
5	Clean Room robots: seal and paint the joints that have been opened. See *Replacing parts on the robot on page 138* **Note** After all repair work, wipe the robot free from particles with spirit on a lint free cloth.	

Continues on next page

© Copyright 2014 - 2017 ABB. All rights reserved.

Concluding procedure

	Action	Note
1	**For robots with protection class IP67 (option 287-10)** **For robots with protection type Foundry Plus (option 287-3)** **For robots with with protection type Clean Room** **For robots with food grade lubrication** Check the gasket. Replace if damaged.	Housing cover gasket (IRB 1200-7/0.7): 3HAC056698-001 Housing cover gasket (IRB 1200-5/0.9): 3HAC056697-001 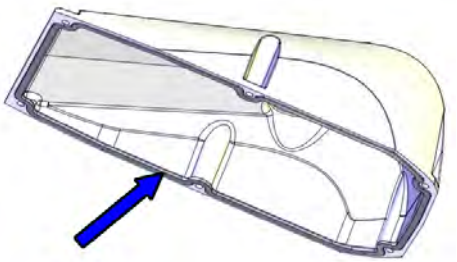 xx1400000477
2	Refit the upper arm housing cover with the screws. **CAUTION** **For robots with safety lamp (option)** Reconnect the lamp cable connectors R3.H1 and R3.H2 and then secure the cover.	Screws: 3HAB3409-207 (M3x8). Tightening torque: 1.5 Nm. 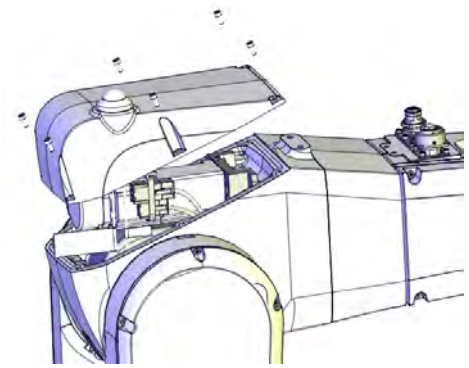 xx1300000456 **Note** Only use specified screws, never replace them with other screws.
3	**For robots with protection type Clean Room** Apply a string of the sealant Sikaflex 521FC to the joint of the upper arm housing cover. Smooth out the sealant string using a finger tip. Use washing-up on finger tips to get a smooth joint. If necessary, add extra sealant to get a full cover joint.	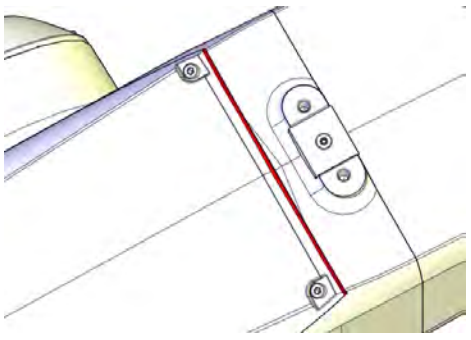 xx1600000215

Continues on next page

© Copyright 2014 - 2017 ABB. All rights reserved.

4.4.1 Replacing the lower arm

Continued

	Action	Note
4	For robots with protection type Clean Room: Clean and paint the joints that have been opened. See *Replacing parts on the robot on page 138*  **Note** After all repair work, wipe the Clean Room robot free from particles with spirit on a lint free cloth.	
5	Recalibrate the robot.	Calibration is detailed in section *Calibration on page 733*.
6	 **DANGER** Make sure all safety requirements are met when performing the first test run. These are further detailed in the section *DANGER - First test run may cause injury or damage! on page 48*.	

© Copyright 2014 - 2017 ABB. All rights reserved.

4.4.2 Replacing the signal lamp

Location of signal lamp

The signal lamp is located as shown in the figure.

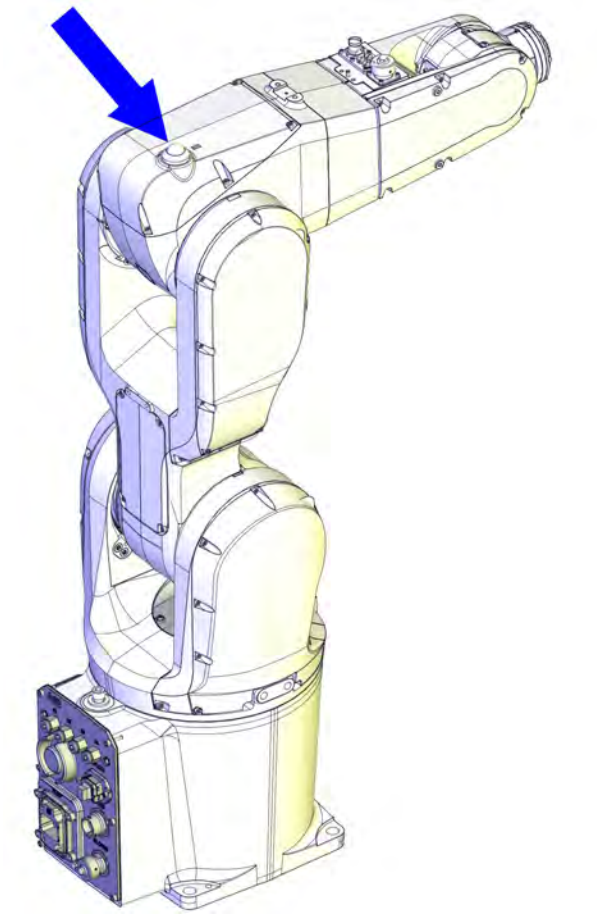

xx1300000455

Required spare parts

Note

The spare part numbers that are listed in the table can be out of date. See the latest revision of *Product manual, spare parts - IRB 1200* on ABB Library.

Spare part	Article number	Note
Signal lamp	3HAC16738-1	
Housing cover gasket (IRB 1200-7/0.7)	3HAC056698-001	Not used with protection class IP40. Replace if damaged.
Housing cover gasket (IRB 1200-5/0.9)	3HAC056697-001	Not used with protection class IP40. Replace if damaged.

Continues on next page

© Copyright 2014 - 2017 ABB. All rights reserved.

4.4.2 Replacing the signal lamp

Continued

Required tools and equipment

Equipment, etc.	Article number	Note
24 VDC power supply	-	Used to release the motor brakes.
Standard toolkit	-	Content is defined in section *Standard toolkit on page 808*.

Replacing the signal lamp

	Action	Note
1	**DANGER** Turn off all: • electric power supply • hydraulic pressure supply • air pressure supply to the robot, before entering the robot working area.	
2	For robots with protection type Clean Room: Always cut the paint with a knife and grind the paint edge when disassembling parts of the robot! See *Replacing parts on the robot on page 138*	
3	Remove the attachment screws of the upper arm housing cover and lift the cover carefully until the connectors of the signal lamp can be reached.	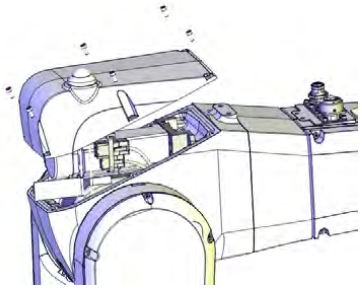 xx1300000456
4	Disconnect the connectors and remove the cover from the robot.	
5	Remove the nut from the lamp and pull out the lamp from the cover.	
6	Fit the new lamp to the cover and tighten the nut.	
7	Find the lamp connectors in the cable harness inside the upper arm housing. • Connect lamp connector R3.H1 to cable harness connector H1. • Connect lamp connector R3.H2 to cable harness connector H2.	
8	For robots with protection type Clean Room: clean the joints that have been opened. See *Replacing parts on the robot on page 138*	

Continues on next page

© Copyright 2014 - 2017 ABB. All rights reserved.

	Action	Note
9	**For robots with protection class IP67 (option 287-10)** **For robots with protection type Foundry Plus (option 287-3)** **For robots with with protection type Clean Room** **For robots with food grade lubrication** Check the gasket. Replace if damaged.	Housing cover gasket (IRB 1200-7/0.7): 3HAC056698-001 Housing cover gasket (IRB 1200-5/0.9): 3HAC056697-001 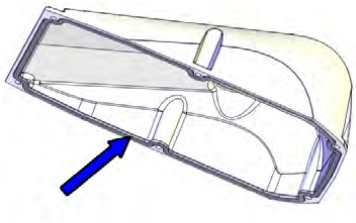 xx1400000477
10	Refit the cover on the upper arm housing.	Screws: 3HAB3409-207 (M3x8). Tightening torque: 1.5 Nm. **Note** Only use specified screws, never replace them with other screws.
11	The signal lamp is now ready for use and is lit in MOTORS ON mode.	
12	For robots with protection type Clean Room: seal and paint the joints that have been opened. See *Replacing parts on the robot on page 138* **Note** After all repair work, wipe the robot free from particles with spirit on a lint free cloth.	

© Copyright 2014 - 2017 ABB. All rights reserved.

4.4.3 Replacing the tubular spare parts

Location of tubular spare parts

The tubular parts that are considered spare parts are located as shown in the figure.

Tubular with sleeve	Tubular cover	Tubular cable housing	Tubular cable housing cover
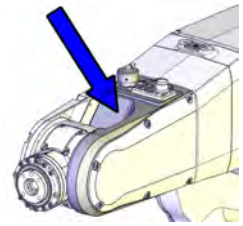 xx1400000432	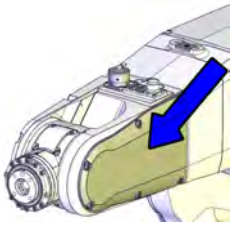 xx1400000433	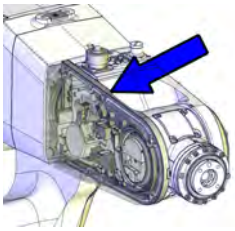 xx1400000434	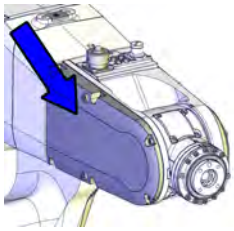 xx1400000435
3HAC059693-001 / 3HAC059723-001 [i]:	3HAC049656-001	3HAC059695-001	3HAC059694-001
3HAC059706-001: Used with protection type Clean Room. Used for robots with food grade lubrication.	3HAC056144-001 / 3HAC059708-001 [ii]: Used with protection type Clean Room. Used for robots with food grade lubrication. Replace if damaged.	3HAC056143-001: Used with protection type Clean Room. Used for robots with food grade lubrication.	3HAC056145-001: Used with protection type Clean Room. Used for robots with food grade lubrication. Replace if damaged.

[i] For information on which tubular to be ordered, see *Spare part versions for the tubular on Type A robots on page 799*.

[ii] For information on which tubular cover for Clean Room robots to be ordered, see *Spare part versions for the tubular cover on Clean Room robots on page 800*.

Required spare parts

Note

The spare part numbers that are listed in the table can be out of date. See the latest revision of *Product manual, spare parts - IRB 1200* on ABB Library.

Spare part	Article number	Note
Tubular with sleeve	3HAC059693-001 / 3HAC059723-001 [i]	
Tubular with sleeve, Clean Room Tubular with sleeve, food grade lubrication	3HAC059706-001	Used with protection type Clean Room. Used for robots with food grade lubrication.
Tubular cover	3HAC049656-001	Replace if damaged.
Tubular cover, Clean Room Tubular cover, food grade lubrication	3HAC056144-001 / 3HAC059708-001 [ii]	Used with protection type Clean Room. Used for robots with food grade lubrication. Replace if damaged.

Continues on next page

© Copyright 2014 - 2017 ABB. All rights reserved.

Spare part	Article number	Note
Gasket for tubular cover	3HAC058822-001	Not used with protection class IP40. Replace if damaged.
Tubular cable housing	3HAC059695-001	
Tubular cable housing, Clean Room Tubular cable housing, food grade lubrication	3HAC056143-001	Used with protection type Clean Room. Used for robots with food grade lubrication.
M2 variseal sealing	3HAC044641-009	Replace if damaged.
Radial sealing	3HAB3701-42	Not used with protection class IP40. Replace if damaged.
Tubular cable housing cover	3HAC059694-001	Replace if damaged.
Tubular cable housing cover, Clean Room Tubular cable housing cover, food grade lubrication	3HAC056145-001	Used with protection type Clean Room. Used for robots with food grade lubrication. Replace if damaged.
Gasket for tubular cable housing cover	3HAC056707-001	Not used with protection class IP40. Replace if damaged.
Washer	3HAC044869-001	Replace if damaged
M2 variseal sealing	3HAC044641-008	Used with protection class IP67. Used with protection type Foundry Plus. Replace if damaged.

i For information on which tubular to be ordered, see *Spare part versions for the tubular on Type A robots on page 799*.

ii For information on which tubular cover for Clean Room robots to be ordered, see *Spare part versions for the tubular cover on Clean Room robots on page 800*.

Required tools and equipment

Equipment, etc.	Article number	Note
Axis-5 sealing assembly tool set	3HAC049701-001	Used to refit the radial sealing, if replacement is needed.
Guide pin for tilt unit (axis 5)	3HAC049706-001	Always use three guide pins together!
24 VDC power supply	-	Used to release the motor brakes.
Calibration toolkit, manual calibration	3HAC051256-001	Includes calibration tools, pins and attachment screws for manual calibration method. [i]
Standard toolkit	-	Content is defined in section *Standard toolkit on page 808*.

i The robot is calibrated by either manual calibration or Axis Calibration at factory. Always use the same calibration method as used at the factory.

Information about valid calibration method is found on the calibration label or in the calibration menu on the FlexPendant.

If no data is found related to standard calibration, manual calibration is used as default.

Continues on next page

© Copyright 2014 - 2017 ABB. All rights reserved.

4.4.3 Replacing the tubular spare parts
Continued

Required consumables

Consumable	Art. no.	Note
Cable straps	-	
Cleaning agent	-	Loctite 7063
Flange sealing	12340011-116	Loctite 574

Deciding calibration routine

Decide which calibration routine to be used, based on the information in the table. Depending on which routine is chosen, action might be required prior to beginning the repair work of the robot, see the table.

	Action	Note
1	Decide which calibration routine to use for calibrating the robot. • Reference calibration. External cable packages (DressPack) and tools can stay fitted on the robot. • Fine calibration. All external cable packages (DressPack) and tools must be removed from the robot.	**Note** Calibrating axis 6 always requires tools to be removed from the mounting flange (also for reference calibration) since the mounting flange is used for installation of the calibration tool.
	If the robot is to be calibrated with reference calibration: Find previous reference values for the axis or create new reference values. These values are to be used after the repair procedure is completed, for calibration of the robot. If no previous reference values exist, and no new reference values can be created, then reference calibration is not possible.	Follow the instructions given in the reference calibration routine on the FlexPendant to create reference values. Creating new values requires possibility to move the robot. Read more about reference calibration for Axis Calibration in *Reference calibration routine on page 743*.
	If the robot is to be calibrated with fine calibration: Remove all external cable packages (DressPack) and tools from the robot.	

Preparations before removing the tubular spare parts

	Action	Note
1	Decide which calibration routine to use, and take actions accordingly prior to beginning the repair procedure.	

Continues on next page

© Copyright 2014 - 2017 ABB. All rights reserved.

	Action	Note
2	Jog all axes to zero position.	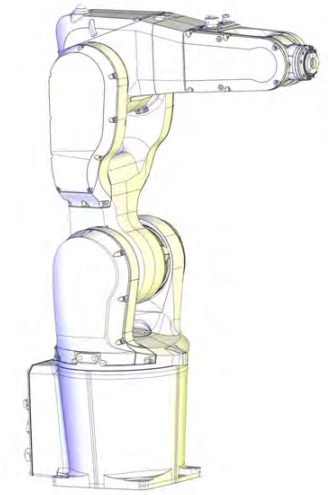 xx1300002581
3	**DANGER** Turn off all: • electric power supply • hydraulic pressure supply • air pressure supply to the robot, before entering the robot working area.	

Replacing the tubular cable housing

Use these procedures to replace the tubular cable housing.

Getting access to inside of the wrist unit

	Action	Note
1	**DANGER** Make sure that all supplies for electrical power, hydraulic pressure, and air pressure are turned off.	
2	**CAUTION** For robots with protection type Clean Room: Always cut the paint with a knife and grind the paint edge when disassembling parts of the robot! See *Replacing parts on the robot on page 138*	

Continues on next page

© Copyright 2014 - 2017 ABB. All rights reserved.

4.4.3 Replacing the tubular spare parts
Continued

	Action	Note
3	Remove the covers on each side of the wrist by removing their screws. **Note** **For robots with protection class IP67 (option 287-10)** **For robots with protection type Foundry Plus (option 287-3)** The two front screws on the left hand side cover (encircled in the figure) have been fitted with locking liquid. The tubular cover (left hand side cover) has two extra screws and washers, as encircled in the figure. **Note** **For robots with protection type Clean Room** The tubular cover (left hand side cover) has two extra screws and washers, as encircled in the figure.	For robots with protection class IP67 (option 287-10) For robots with protection type Foundry Plus (option 287-3) 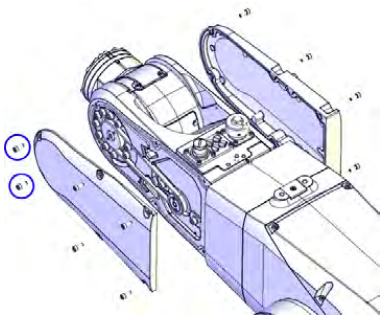 xx1300002349 For robots with protection type Clean Room 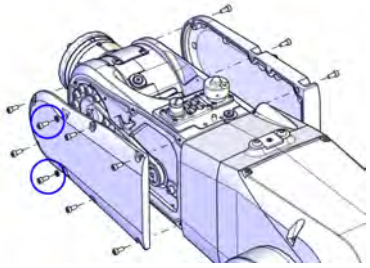 xx1600001148

Removing the tubular cable housing

	Action	Note
1	**CAUTION** For robots with protection type Clean Room: Always cut the paint with a knife and grind the paint edge when disassembling parts of the robot! See *Replacing parts on the robot on page 138*	
2	Snap loose and disconnect the axis-5 FPC connectors.	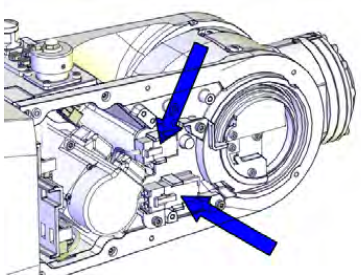 xx1300002390

Continues on next page

© Copyright 2014 - 2017 ABB. All rights reserved.

	Action	Note
3	Remove the connector plate by first removing the screws.	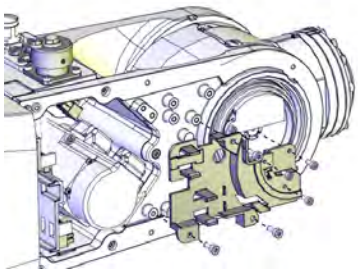 xx1300002391
4	Remove the cable housing of the tubular by first removing the screws. **Note** **For robots with protection class IP67 (option 287-10)** **For robots with protection type Foundry Plus (option 287-3)** The frame is glued and needs to be pried off.	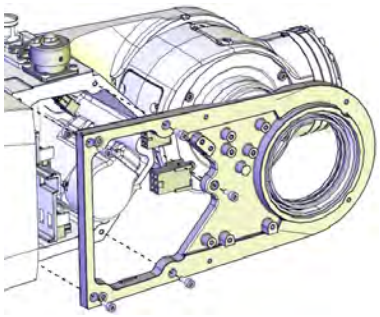 xx1300002392

Checking the tubular cable housing sealings

	Action	Note
1	Clean Room robots: clean the joints that have been opened. See *Replacing parts on the robot on page 138*	
2	Check the sealing. Replace if damaged. **CAUTION** Do not fit M2 variseal sealing on Clean Room robots.	M2 variseal sealing: 3HAC044641-009 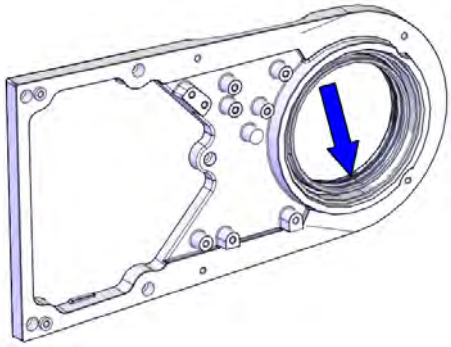 xx1300002396

Continues on next page

© Copyright 2014 - 2017 ABB. All rights reserved.

4.4.3 Replacing the tubular spare parts

Continued

	Action	Note
3	**For robots with protection class IP67 (option 287-10)** **For robots with protection type Foundry Plus (option 287-3)** **For robots with with protection type Clean Room** **For robots with food grade lubrication** Check the radial sealing. Replace if damaged, as described below. If undamaged and properly seated, skip to the next procedure table.	Radial sealing: 3HAB3701-42 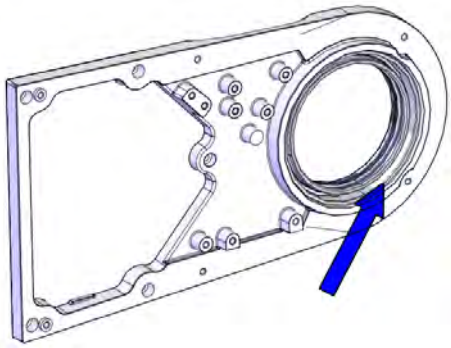 xx1300002608
4	**For robots with protection type Clean Room** Apply a little grease to the sealing when replacing the radial sealing and wipe clean after the replacement.	
5	Fit the radial sealing into the tubular cable housing.	
6	Fit the circular part of the radial sealing assembly tool against the radial sealing.	Axis-5 sealing assembly tool set: 3HAC049701-001
7	Fit the tool plate to the other side of the tubular cable housing with the six screws M6x40.	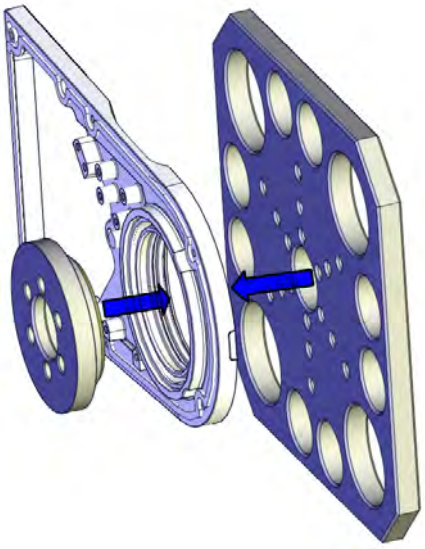 xx1400000485

Continues on next page

© Copyright 2014 - 2017 ABB. All rights reserved.

	Action	Note
8	Screw the screws, little by little, to press the sealing into place.	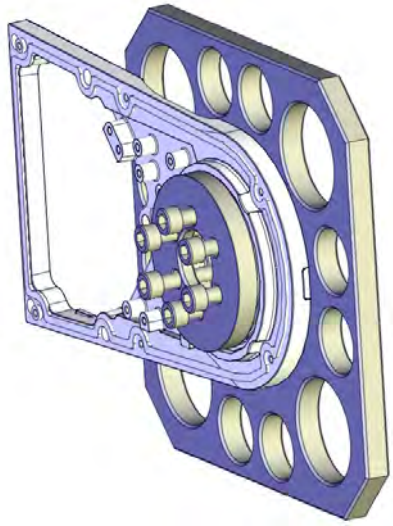 xx1400000486
9	Remove the assembly tool.	
10	Check that the sealing is undamaged and properly fitted.	
11	Clean Room robots: seal and paint the joints that have been opened. See *Replacing parts on the robot on page 138* **Note** After all repair work, wipe the robot free from particles with spirit on a lint free cloth.	

Refitting the tubular cable housing

	Action	Note
1	Clean Room robots: clean the joints that have been opened. See *Replacing parts on the robot on page 138*	
2	**For robots with protection class IP67 (option 287-10)** **For robots with protection type Foundry Plus (option 287-3)** Remove residual locking liquid and other pollutants with cleaning agent Loctite 7063. Apply flange sealing Loctite 574 on the mounting surfaces of the tubular cable housing. **Note** For Clean Room robots, wipe clean the overflowing Loctite 574 if there is any.	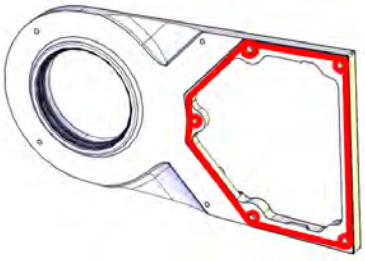 xx1300002610

Continues on next page

© Copyright 2014 - 2017 ABB. All rights reserved.

4.4.3 Replacing the tubular spare parts
Continued

	Action	Note
3	Refit the tubular cable housing with the screws.	Tightening torque: 1.5 Nm. Tubular cable housing: 3HAC059695-001 : 3HAC056143-001 (used with protection type Clean Room) Tubular cable housing, Clean Room Tubular cable housing, food grade lubrication 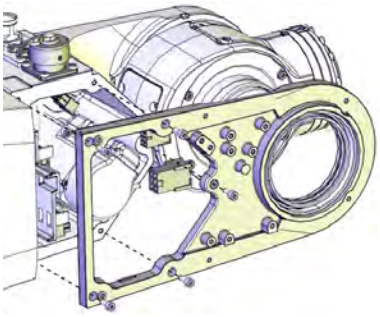 xx1300002392
4	Clean Room robots: seal and paint the joints that have been opened. See *Replacing parts on the robot on page 138* **Note** After all repair work, wipe the robot free from particles with spirit on a lint free cloth.	

Refitting the connector plate

	Action	Note
1	Clean Room robots: clean the joints that have been opened. See *Replacing parts on the robot on page 138*	
2	Refit the connector plate and secure with the M3 screws.	Tightening torque: 0.3 Nm. 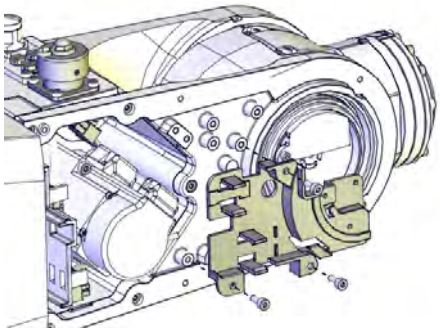 xx1400001401

Continues on next page

© Copyright 2014 - 2017 ABB. All rights reserved.

	Action	Note
3	Secure the three M2.5 screws.	Tightening torque: 0.3 Nm. 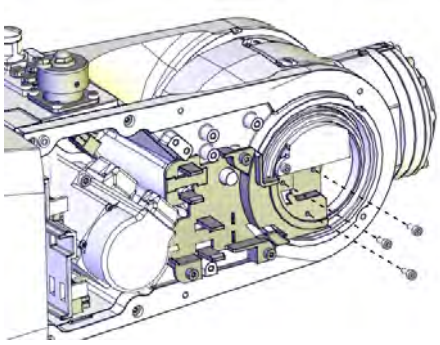 xx1400001402
4	Clean Room robots: seal and paint the joints that have been opened. See *Replacing parts on the robot on page 138* **Note** After all repair work, wipe the robot free from particles with spirit on a lint free cloth.	

Connecting the axis-5 motor FPC connectors

	Action	Note
1	Connect the axis-5 FPC connectors and snap them to their holders.	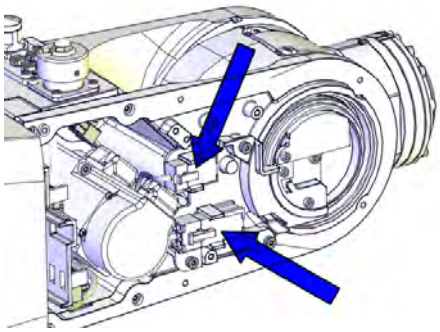 xx1300002390

Refitting the wrist covers

	Action	Note
1	Clean Room robots: clean the joints that have been opened. See *Replacing parts on the robot on page 138*	

Continues on next page

© Copyright 2014 - 2017 ABB. All rights reserved.

4.4.3 Replacing the tubular spare parts

Continued

	Action	Note
2	**For robots with protection class IP67 (option 287-10)** **For robots with protection type Foundry Plus (option 287-3)** **For robots with with protection type Clean Room** **For robots with food grade lubrication** Check the tubular cover gasket. Replace if damaged.	Gasket for tubular cover: 3HAC058822-001 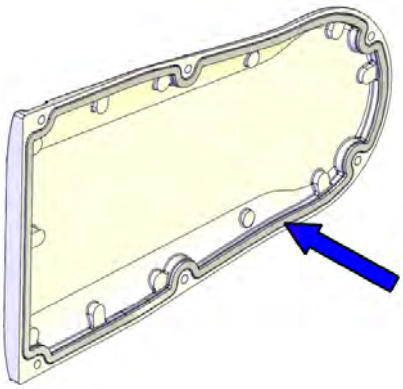 xx1400000034
3	**For robots with protection class IP67 (option 287-10)** **For robots with protection type Foundry Plus (option 287-3)** **For robots with with protection type Clean Room** **For robots with food grade lubrication** Check the tubular cable housing cover gasket. Replace if damaged.	Gasket for tubular cable housing cover: 3HAC056707-001 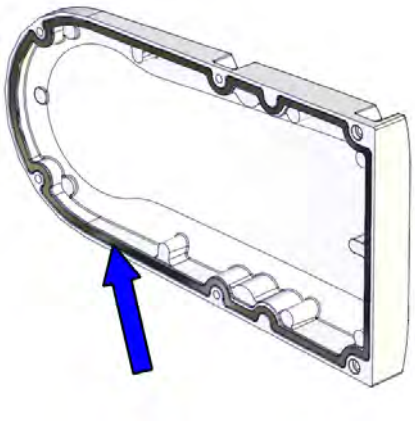 xx1400000345

Continues on next page

© Copyright 2014 - 2017 ABB. All rights reserved.

	Action	Note
4	Refit the both covers to the wrist. **For robots with protection class IP67 (option 287-10)** **For robots with protection type Foundry Plus (option 287-3)** Apply locking liquid Loctite 243 to the two front screws on the left hand side cover, encircled in the figure. Remember to refit the extra two screws and washers to the tubular cover. **For robots with protection type Clean Room** Remember to refit the extra two screws and washers to the tubular cover.	Screws: 3HAB3409-207 (M3x8). Tightening torque: 1.5 Nm. For robots with protection class IP67 (option 287-10) For robots with protection type Foundry Plus (option 287-3) 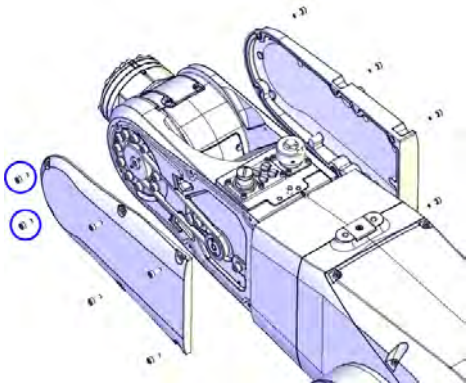 xx1300002349 For robots with protection type Clean Room 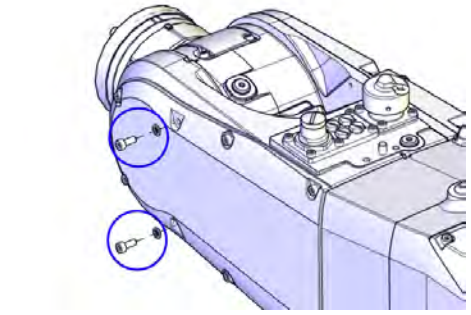 xx1600001153 **Note** Only use specified screws, never replace them with other screws.
5	Clean Room robots: seal and paint the joints that have been opened. See *Replacing parts on the robot on page 138* **Note** After all repair work, wipe the robot free from particles with spirit on a lint free cloth.	

Continues on next page

© Copyright 2014 - 2017 ABB. All rights reserved.

4.4.3 Replacing the tubular spare parts
Continued

Removing the tubular

Use these procedures to remove the tubular.

Getting access to inside of the wrist unit

	Action	Note
1	**DANGER** Make sure that all supplies for electrical power, hydraulic pressure, and air pressure are turned off.	
2	**CAUTION** For robots with protection type Clean Room: Always cut the paint with a knife and grind the paint edge when disassembling parts of the robot! See *Replacing parts on the robot on page 138*	
3	Remove the covers on each side of the wrist by removing their screws. **Note** **For robots with protection class IP67 (option 287-10)** **For robots with protection type Foundry Plus (option 287-3)** The two front screws on the left hand side cover (encircled in the figure) have been fitted with locking liquid. The tubular cover (left hand side cover) has two extra screws and washers, as encircled in the figure. **Note** **For robots with protection type Clean Room** The tubular cover (left hand side cover) has two extra screws and washers, as encircled in the figure.	For robots with protection class IP67 (option 287-10) For robots with protection type Foundry Plus (option 287-3) 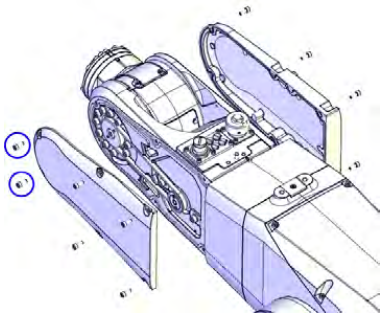 xx1300002349 For robots with protection type Clean Room 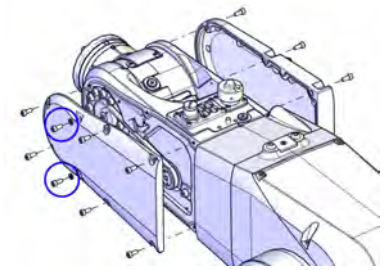 xx1600001148

Continues on next page

© Copyright 2014 - 2017 ABB. All rights reserved.

Disconnecting the axis-5 motor connectors

	Action	Note
1	**DANGER** Make sure that all supplies for electrical power, hydraulic pressure, and air pressure are turned off.	
2	Snap loose the motor connectors from their holders and then disconnect them. • R3.MP5 • R3.ME5 **Tip** Take photos of the connector and cable position before disconnecting them, to have as a reference when reconnecting.	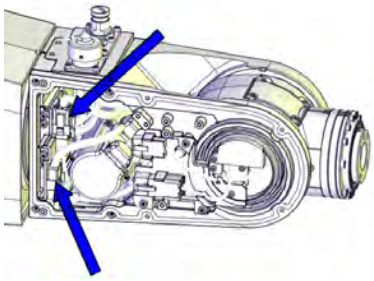 xx1300002360

Removing the axis-5 motor with pulley

	Action	Note
1	**DANGER** Make sure that all supplies for electrical power, hydraulic pressure, and air pressure are turned off.	
2	**CAUTION** For robots with protection type Clean Room: Always cut the paint with a knife and grind the paint edge when disassembling parts of the robot! See *Replacing parts on the robot on page 138*	
3	Loosen the screws so that the motor can be moved sideways.	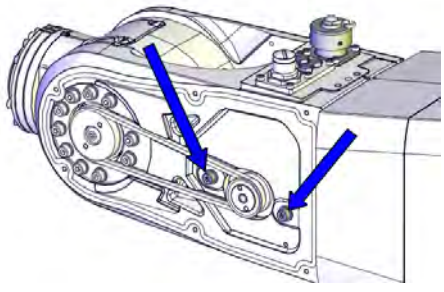 xx1300002350

Continues on next page

© Copyright 2014 - 2017 ABB. All rights reserved.

4.4.3 Replacing the tubular spare parts
Continued

	Action	Note
4	Remove the timing belt.	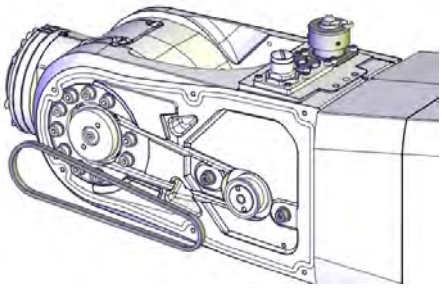 xx1300002351
5	Snap loose and disconnect the axis-5 FPC connectors.	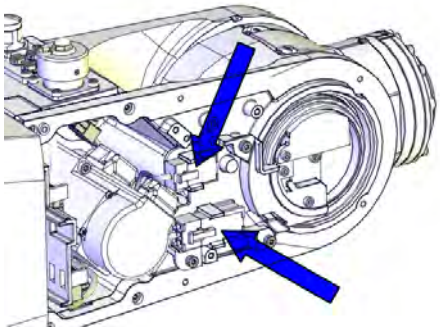 xx1300002390
6	Remove the screws and pull out the motor.	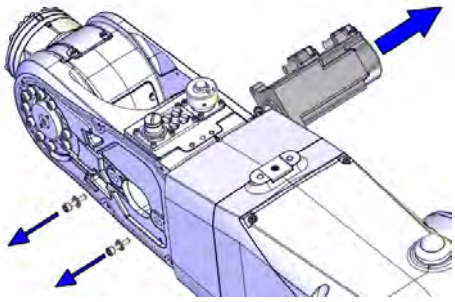 xx1300002352

Removing the wrist

	Action	Note
1	**DANGER** Make sure that all supplies for electrical power, hydraulic pressure, and air pressure are turned off.	
2	**CAUTION** For robots with protection type Clean Room: Always cut the paint with a knife and grind the paint edge when disassembling parts of the robot! See *Replacing parts on the robot on page 138*	

Continues on next page

© Copyright 2014 - 2017 ABB. All rights reserved.

	Action	Note
3	Disconnect the connectors shown in the figure.	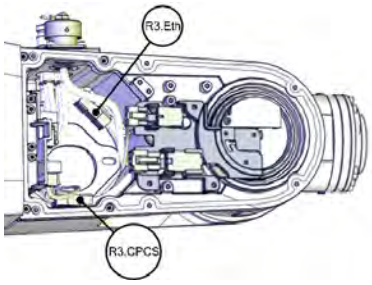 xx1300002353
4	Disconnect the air hoses.	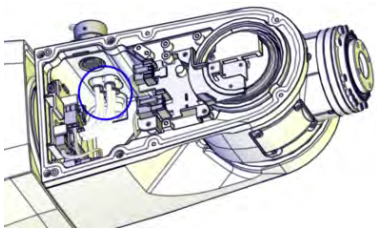 xx1300002355
5	Remove the connector plate attachment screws.	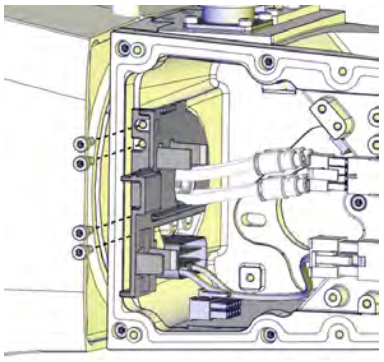 xx1300002356
6	Guide the hoses through the plate hole and remove the plate.	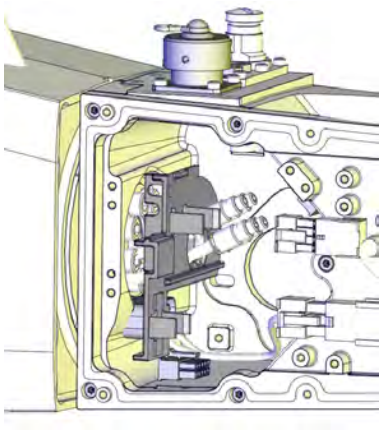 xx1300002357

Continues on next page

© Copyright 2014 - 2017 ABB. All rights reserved.

4.4.3 Replacing the tubular spare parts
Continued

	Action	Note
7	Support the weight of the wrist and remove the screws and the washer.	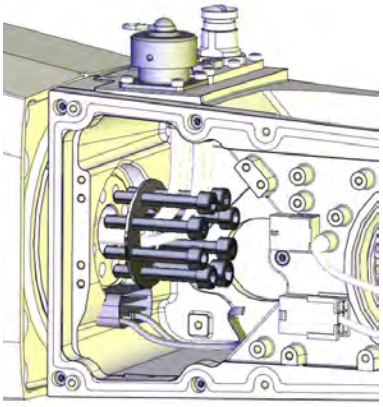 xx1300002358
8	Pull out the wrist carefully while at the same time pulling all connectors and the air hoses out of the wrist. Be careful not to damage the FPC cabling and the connectors. **CAUTION** Pay special attention to the plastic block on the FPC unit. It is easily pulled off, make sure it stays fitted to the FPC unit. 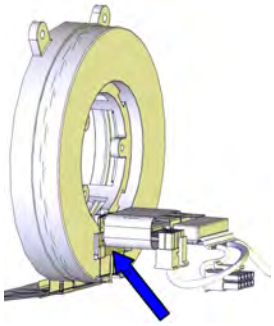 xx1300002611	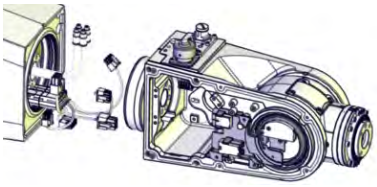 xx1300002359

Separating the tilt unit from the tubular

	Action	Note
1	**DANGER** Make sure that all supplies for electrical power, hydraulic pressure, and air pressure are turned off.	

Continues on next page

© Copyright 2014 - 2017 ABB. All rights reserved.

	Action	Note
2	**CAUTION** For robots with protection type Clean Room: Always cut the paint with a knife and grind the paint edge when disassembling parts of the robot! See *Replacing parts on the robot on page 138*	
3	Remove the cable housing of the tubular by first removing the screws. **Note** **For robots with protection class IP67 (option 287-10)** **For robots with protection type Foundry Plus (option 287-3)** The frame is glued and needs to be pried off.	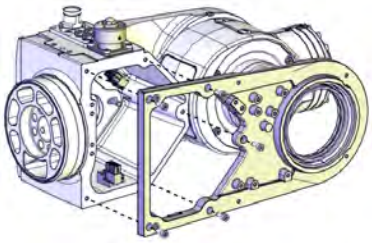 xx1400000774
4	Support the weight of the tilt unit and remove the screws.	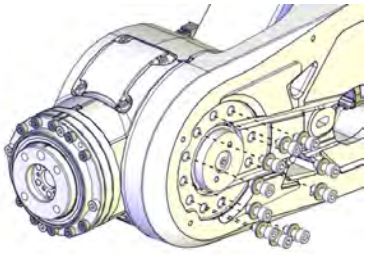 xx1300002469
5	Fit guide pins to the gearbox.	Guide pin for tilt unit (axis 5): 3HAC049706-001 Always use three guide pins together! 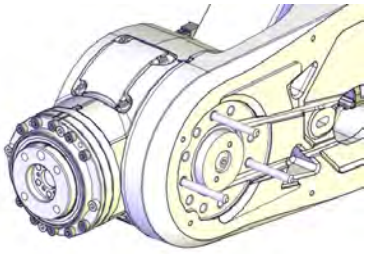 xx1400000775
6	Remove the tilt unit.	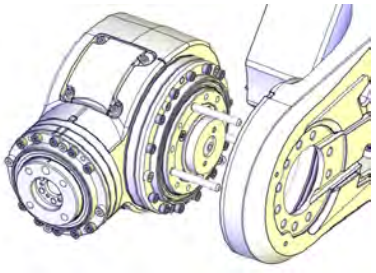 xx1300002470

Continues on next page

© Copyright 2014 - 2017 ABB. All rights reserved.

4.4.3 Replacing the tubular spare parts
Continued

Refitting the tubular

Use these procedures to refit the tubular.

Refitting the axis-5 and axis-6 drive unit

	Action	Note
1	Clean Room robots: clean the joints that have been opened. See *Replacing parts on the robot on page 138*	
2	**For robots with protection type Foundry Plus (option 287-3)** Check the protection cover for turning disk and T40 variseal sealing. Replace if damaged.	Protection cover for axis-6 turning disk: 3HAC044666-001 T40 variseal sealing: 3HAC044641-012 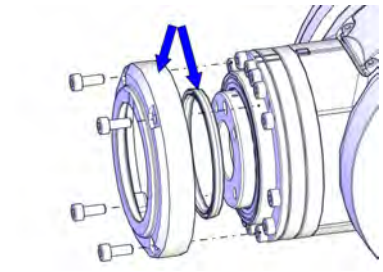 xx1600001126
3	**For robots with protection class IP67 (option 287-10)** **For robots with protection type Foundry Plus (option 287-3)** Check the sealing. Replace if damaged. **CAUTION** Do not fit M2 variseal sealing on Clean Room robots.	M2 variseal sealing: 3HAC044641-008 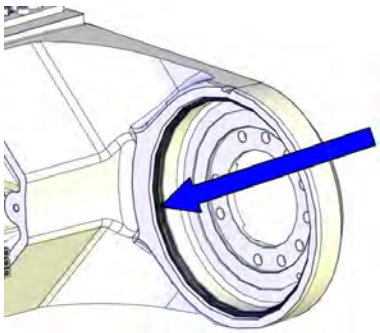 xx1300002493
4	Remove residual locking liquid and other pollutants with cleaning agent Loctite 7063. Apply flange sealing Loctite 574 on the mounting surfaces of the drive unit. **Note** For Clean Room robots, wipe clean the overflowing Loctite 574 if there is any.	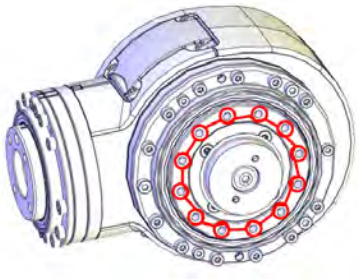 xx1400001404

Continues on next page

© Copyright 2014 - 2017 ABB. All rights reserved.

	Action	Note
5	Fit guide pins to the axis-5 gearbox.	Guide pin for tilt unit (axis 5): 3HAC049706-001 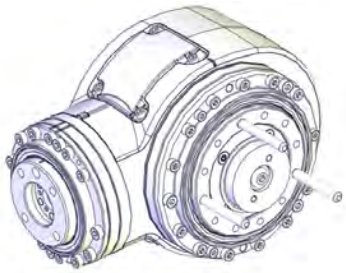 xx1300002568
6	**For robots with protection type Clean Room** Make sure the sealing to the tilt covers is intact before the refitting.	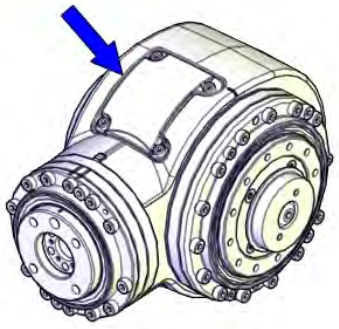 xx1600000219 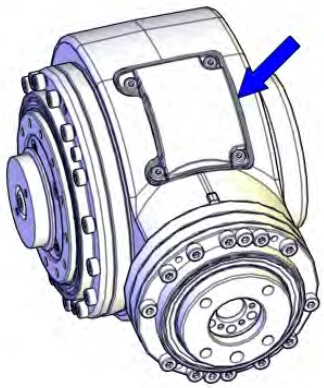 xx1600000220

Continues on next page

© Copyright 2014 - 2017 ABB. All rights reserved.

4.4.3 Replacing the tubular spare parts
Continued

	Action	Note
7	Refit the drive unit and secure with the screws and washers. Secure the screws but do not tighten yet. **Note** If there is glue on the screw, please clean it or replace it with a new one.	Attachment screws: 3HAB3409-236 (M4x10). 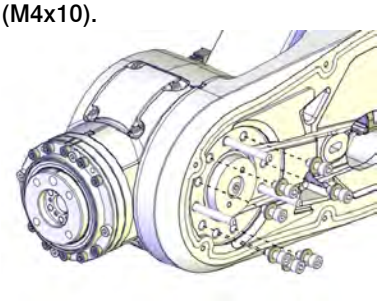 xx1300002569 **Note** Only use specified screws, never replace them with other screws.
8	Remove the guide pins and refit the remaining screws and washers.	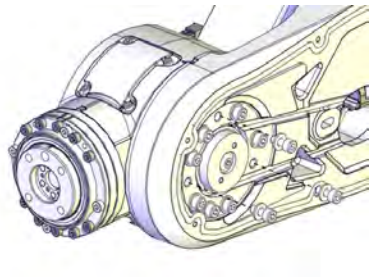 xx1300002570
9	Tighten the screws.	Tightening torque: 4.5 Nm.
10	Clean Room robots: seal and paint the joints that have been opened. See *Replacing parts on the robot on page 138* **Note** After all repair work, wipe the robot free from particles with spirit on a lint free cloth.	

Checking the tubular cable housing sealings

	Action	Note
1	Clean Room robots: clean the joints that have been opened. See *Replacing parts on the robot on page 138*	

Continues on next page

© Copyright 2014 - 2017 ABB. All rights reserved.

	Action	Note
2	Check the sealing. Replace if damaged. **CAUTION** Do not fit M2 variseal sealing on Clean Room robots.	M2 variseal sealing: 3HAC044641-009 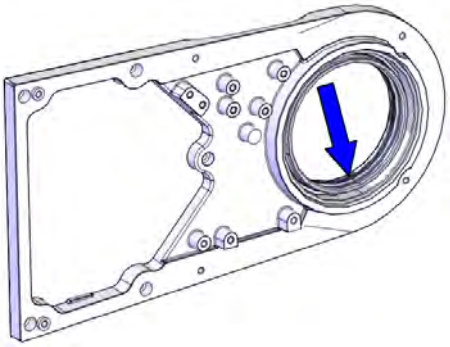 xx1300002396
3	**For robots with protection class IP67 (option 287-10)** **For robots with protection type Foundry Plus (option 287-3)** **For robots with with protection type Clean Room** **For robots with food grade lubrication** Check the radial sealing. Replace if damaged, as described below. If undamaged and properly seated, skip to the next procedure table.	Radial sealing: 3HAB3701-42 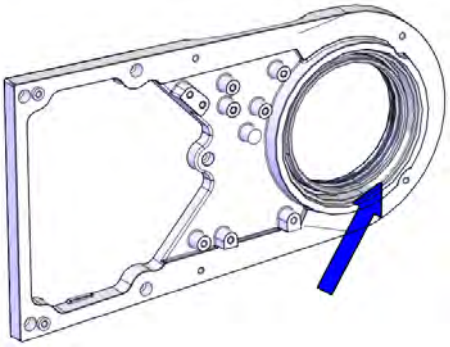 xx1300002608
4	**For robots with protection type Clean Room** Apply a little grease to the sealing when replacing the radial sealing and wipe clean after the replacement.	
5	Fit the radial sealing into the tubular cable housing.	

Continues on next page

© Copyright 2014 - 2017 ABB. All rights reserved.

4.4.3 Replacing the tubular spare parts

Continued

	Action	Note
6	Fit the circular part of the radial sealing assembly tool against the radial sealing.	Axis-5 sealing assembly tool set: 3HAC049701-001
7	Fit the tool plate to the other side of the tubular cable housing with the six screws M6x40.	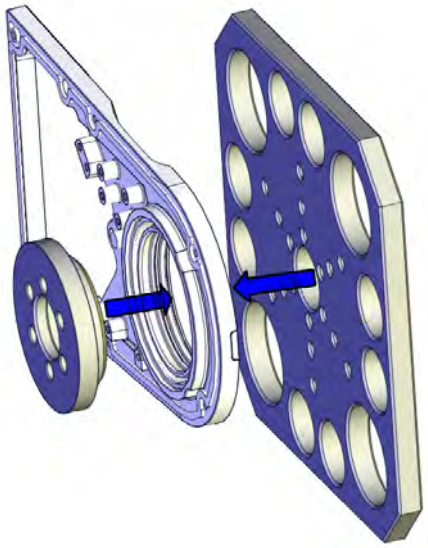 xx1400000485
8	Screw the screws, little by little, to press the sealing into place.	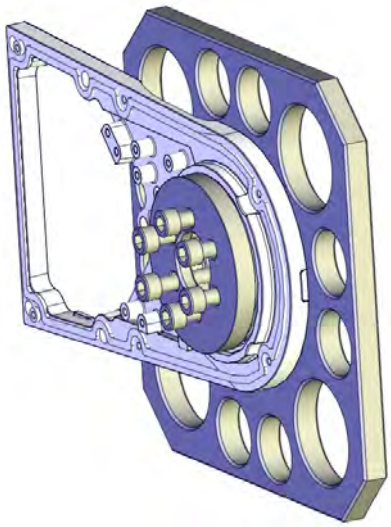 xx1400000486
9	Remove the assembly tool.	
10	Check that the sealing is undamaged and properly fitted.	
11	Clean Room robots: seal and paint the joints that have been opened. See *Replacing parts on the robot on page 138* **Note** After all repair work, wipe the robot free from particles with spirit on a lint free cloth.	

Continues on next page

© Copyright 2014 - 2017 ABB. All rights reserved.

Refitting the tubular cable housing

	Action	Note
1	Clean Room robots: clean the joints that have been opened. See *Replacing parts on the robot on page 138*	
2	**For robots with protection class IP67 (option 287-10)** **For robots with protection type Foundry Plus (option 287-3)** Remove residual locking liquid and other pollutants with cleaning agent Loctite 7063. Apply flange sealing Loctite 574 on the mounting surfaces of the tubular cable housing. **Note** For Clean Room robots, wipe clean the overflowing Loctite 574 if there is any.	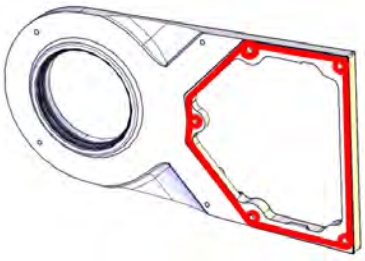 xx1300002610
3	Refit the tubular cable housing with the screws.	Tightening torque: 1.5 Nm. Tubular cable housing: 3HAC059695-001 : 3HAC056143-001 (used with protection type Clean Room) Tubular cable housing, Clean Room Tubular cable housing, food grade lubrication 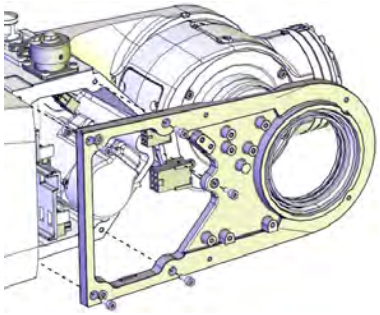 xx1300002392
4	Clean Room robots: seal and paint the joints that have been opened. See *Replacing parts on the robot on page 138* **Note** After all repair work, wipe the robot free from particles with spirit on a lint free cloth.	

Refitting the wrist

	Action	Note
1	Clean Room robots: clean the joints that have been opened. See *Replacing parts on the robot on page 138*	

Continues on next page

© Copyright 2014 - 2017 ABB. All rights reserved.

4.4.3 Replacing the tubular spare parts

Continued

	Action	Note
2	Put the connectors and air hoses into the wrist carefully while at the same time refitting the wrist to the housing extender unit. Be careful not to damage the FPC cabling and the connectors. **CAUTION** Pay special attention to the plastic block on the FPC unit. It is easily pulled off, make sure it stays fitted to the FPC unit. 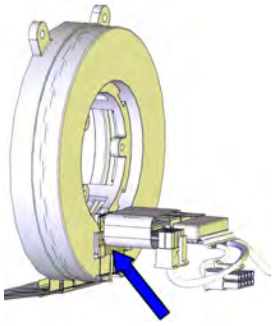 xx1300002611	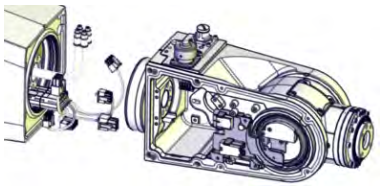 xx1300002359
3	Refit the washer while at the same time putting the cables through its center. Replace washer, if damaged.	Washer: 3HAC044869-001 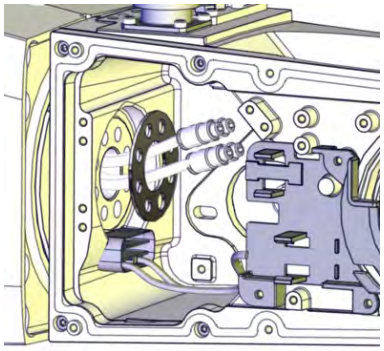 xx1400000001

Continues on next page

© Copyright 2014 - 2017 ABB. All rights reserved.

	Action	Note
4	Refit the screw M6x35 (1 pc). Do not tighten yet.	Screw: 3HAB3409-238 (M6x35 (1 pc)). 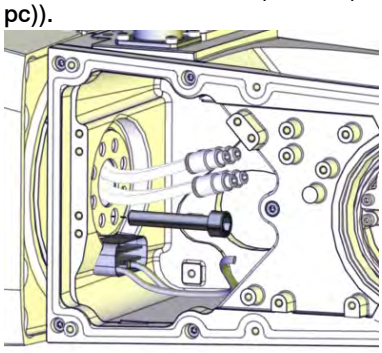 xx1400000002 **Note** Only use specified screws, never replace them with other screws.
5	Refit the rest of the screws (M5x35 (7 pcs)).	Screw: 3HAB3409-237 (M5x35 (7 pcs)). 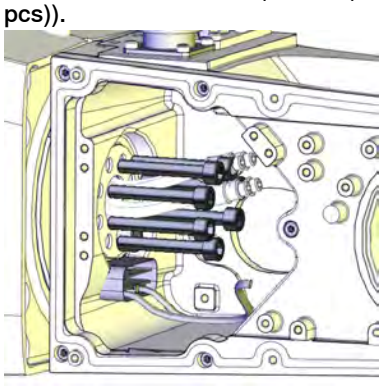 xx1400000003 **Note** Only use specified screws, never replace them with other screws.
6	Tighten all screws.	Tightening torque: 8 Nm.
7	Put the cables through the plate hole and refit the plate.	Tightening torque: 0.3 Nm. 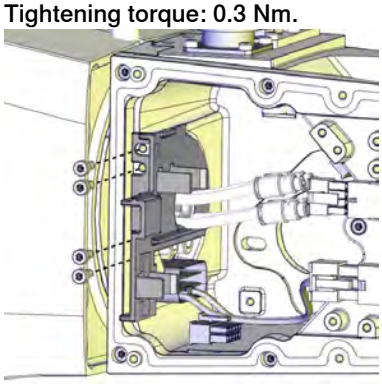 xx1300002356

Continues on next page

© Copyright 2014 - 2017 ABB. All rights reserved.

4.4.3 Replacing the tubular spare parts
Continued

	Action	Note
8	Reconnect the air hoses. **CAUTION** Make sure to connect the air hoses correctly, according to the marking on hoses and connectors.	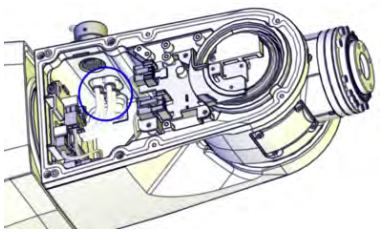 xx1300002355
9	Reconnect the connectors. • R3.Eth • R3.CPCS	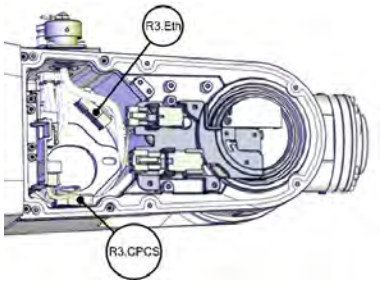 xx1300002353
10	Clean Room robots: seal and paint the joints that have been opened. See *Replacing parts on the robot on page 138* **Note** After all repair work, wipe the robot free from particles with spirit on a lint free cloth.	

Preparations before securing the axis-5 motor

	Action	Note
1	Check that: • all assembly surfaces are clean and without damages • the motor is clean and undamaged.	
2	Place the motor at its mounting position and fasten the attachment screws and washers just enough to still be able to move the motor.	Screws: 3HAB3409-212 (M4x16). 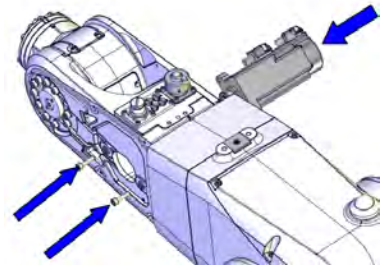 xx1300002463 **Note** Only use specified screws, never replace them with other screws.

Continues on next page

© Copyright 2014 - 2017 ABB. All rights reserved.

Securing the axis-5 motor and timing belt

	Action	Note
1	Clean Room robots: clean the joints that have been opened. See *Replacing parts on the robot on page 138*	
2	Refit the timing belt on the pulley.	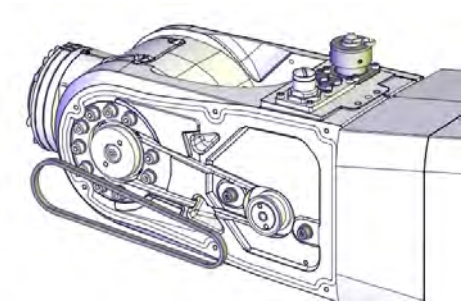 xx1300002351
3	Move the motor to a position where a good timing belt tension is reached (F = 26 N).	**Note** Do not strech the timing belt too much!
4	Secure the motor with its attachment screws.	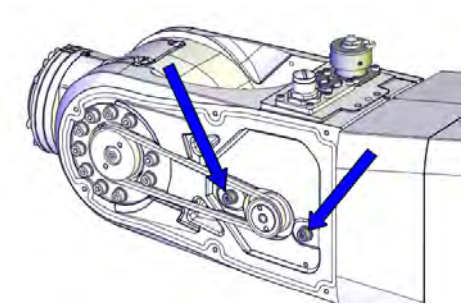 xx1300002350 Tightening torque: 3.5 Nm.
5	Clean Room robots: seal and paint the joints that have been opened. See *Replacing parts on the robot on page 138* **Note** After all repair work, wipe the robot free from particles with spirit on a lint free cloth.	

Refitting the connector plate

	Action	Note
1	Clean Room robots: clean the joints that have been opened. See *Replacing parts on the robot on page 138*	

Continues on next page

© Copyright 2014 - 2017 ABB. All rights reserved.

4.4.3 Replacing the tubular spare parts
Continued

	Action	Note
2	Refit the connector plate and secure with the M3 screws.	Tightening torque: 0.3 Nm. 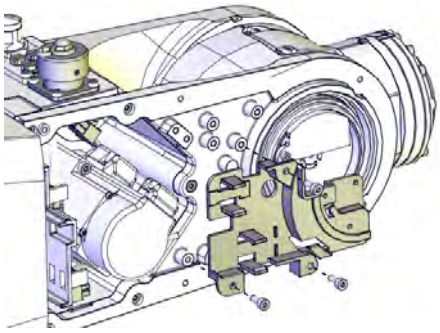 xx1400001401
3	Secure the three M2.5 screws.	Tightening torque: 0.3 Nm. 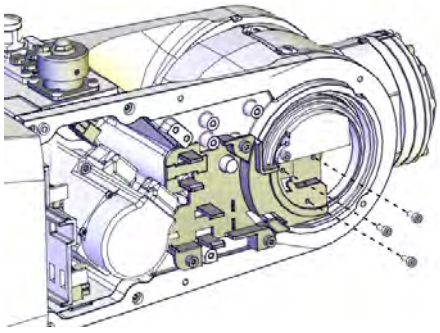 xx1400001402
4	Clean Room robots: seal and paint the joints that have been opened. See *Replacing parts on the robot on page 138* **Note** After all repair work, wipe the robot free from particles with spirit on a lint free cloth.	

Connecting the axis-5 motor FPC connectors

	Action	Note
1	Connect the axis-5 FPC connectors and snap them to their holders.	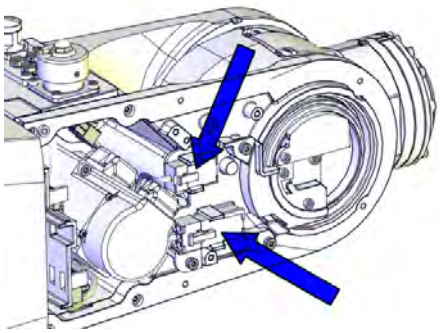 xx1300002390

Continues on next page

© Copyright 2014 - 2017 ABB. All rights reserved.

Connecting the axis-5 motor connectors

	Action	Note
1	Reconnect the motor cables. • R3.MP5 • R3.ME5	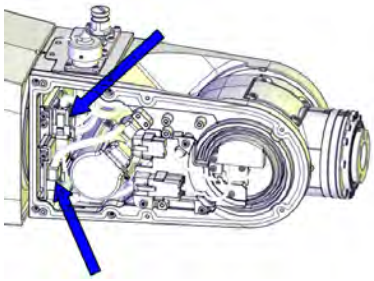 xx1300002360

Refitting the wrist covers

	Action	Note
1	Clean Room robots: clean the joints that have been opened. See *Replacing parts on the robot on page 138*	
2	**For robots with protection class IP67 (option 287-10)** **For robots with protection type Foundry Plus (option 287-3)** **For robots with with protection type Clean Room** **For robots with food grade lubrication** Check the tubular cover gasket. Replace if damaged.	Gasket for tubular cover: 3HAC058822-001 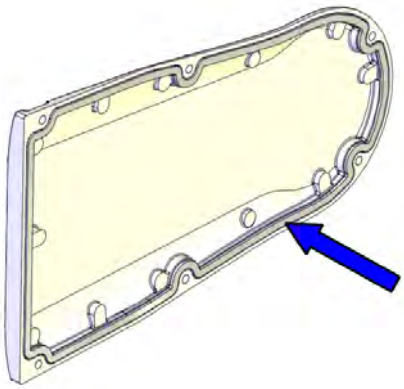 xx1400000034
3	**For robots with protection class IP67 (option 287-10)** **For robots with protection type Foundry Plus (option 287-3)** **For robots with with protection type Clean Room** **For robots with food grade lubrication** Check the tubular cable housing cover gasket. Replace if damaged.	Gasket for tubular cable housing cover: 3HAC056707-001 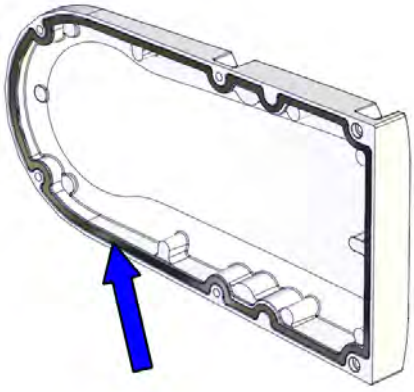 xx1400000345

Continues on next page

© Copyright 2014 - 2017 ABB. All rights reserved.

4.4.3 Replacing the tubular spare parts

Continued

	Action	Note
4	Refit the both covers to the wrist. **For robots with protection class IP67 (option 287-10)** **For robots with protection type Foundry Plus (option 287-3)** Apply locking liquid Loctite 243 to the two front screws on the left hand side cover, encircled in the figure. Remember to refit the extra two screws and washers to the tubular cover. **For robots with protection type Clean Room** Remember to refit the extra two screws and washers to the tubular cover.	Screws: 3HAB3409-207 (M3x8). Tightening torque: 1.5 Nm. For robots with protection class IP67 (option 287-10) For robots with protection type Foundry Plus (option 287-3) 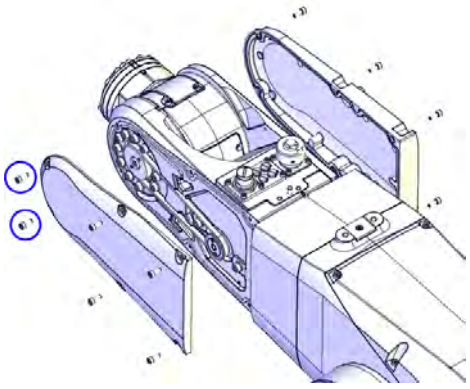 xx1300002349 For robots with protection type Clean Room 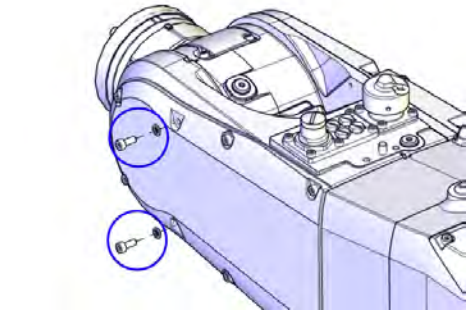 xx1600001153 **Note** Only use specified screws, never replace them with other screws.
5	Clean Room robots: seal and paint the joints that have been opened. See *Replacing parts on the robot on page 138* **Note** After all repair work, wipe the robot free from particles with spirit on a lint free cloth.	

Continues on next page

© Copyright 2014 - 2017 ABB. All rights reserved.

Concluding procedures

	Action	Note
1	For robots with protection type Clean Room: Clean and paint the joints that have been opened. See *Replacing parts on the robot on page 138*  **Note** After all repair work, wipe the Clean Room robot free from particles with spirit on a lint free cloth.	
2	Recalibrate the robot.	Calibration information is included in section *Calibration on page 733*.
3	 **DANGER** Make sure all safety requirements are met when performing the first test run. These are further detailed in the section *DANGER - First test run may cause injury or damage! on page 48*.	

© Copyright 2014 - 2017 ABB. All rights reserved.

4.4.4 Replacing the axis-3 radial sealing and sealing ring

Location of the sealings

The axis-3 radial sealing and sealing ring are located as shown in the figure.

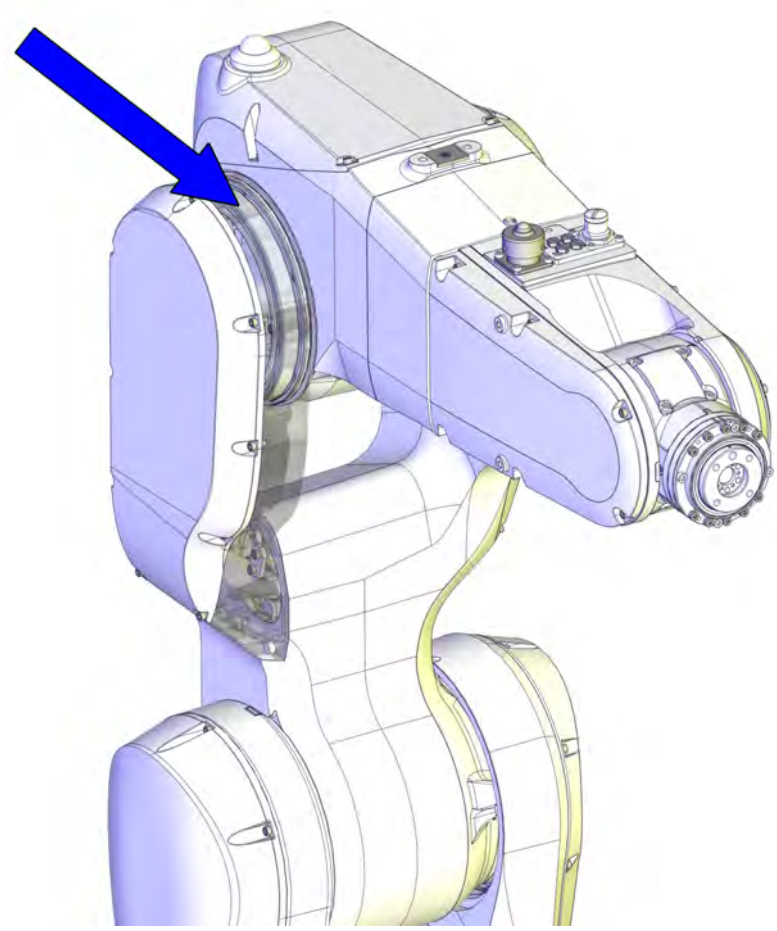

xx1400000336

Required spare parts

Note

The spare part numbers that are listed in the table can be out of date. See the latest revision of *Product manual, spare parts - IRB 1200* on ABB Library.

Spare part	Article number	Note
Radial sealing	3HAC024865-001	Not used with protection class IP40. Replace if damaged.
M2 variseal sealing	3HAC044641-006	Used with protection class IP67. Used with protection type Foundry Plus. Replace if damaged.
Axis-3 sealing ring	3HAC044678-001	Replace if damaged.

Continues on next page

© Copyright 2014 - 2017 ABB. All rights reserved.

Spare part	Article number	Note
Gasket on lower arm cable housing	3HAC044895-001	Not used with protection class IP40. Replace if damaged.
Cable harness material set	3HAC049663-001	Includes brackets, sheets, distance screws, plastics, cable clamp, seal bolts and air protection in tubular.
Gasket on cable housing cover	3HAC056724-001	Not used with protection class IP40. Replace if damaged.
Gasket for tubular cable housing cover	3HAC056707-001	Not used with protection class IP40. Replace if damaged.

Required tools and equipment

Equipment, etc.	Article number	Note
Axis-3 sealing assembly tool set	3HAC049697-001	Used to refit the axis-3 radial sealing.
24 VDC power supply	-	Used to release the motor brakes.
Standard toolkit	-	Content is defined in section *Standard toolkit on page 808*.

Required consumables

Consumable	Art. no.	Note
Cable straps	-	
Cleaning agent	-	Loctite 7063
Flange sealing	12340011-116	Loctite 574 For robots with protection class IP67 (option 287-10) For robots with protection type Foundry Plus (option 287-3)
Sealant	3HAC026759-001	Sikaflex 521FC For robots with protection type Clean Room

Continues on next page

© Copyright 2014 - 2017 ABB. All rights reserved.

4.4.4 Replacing the axis-3 radial sealing and sealing ring
Continued

Removing the sealings

Use these procedures to remove the axis-3 radial sealing and/or axis-3 sealing ring.

Preparations before removing the sealings

	Action	Note
1	Jog all axes to zero position.	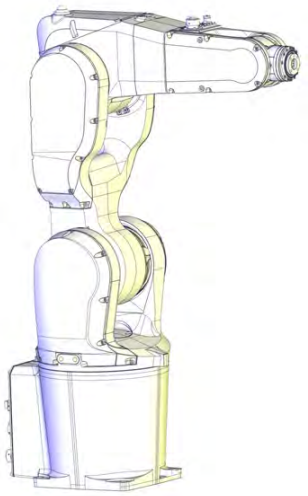 xx1300002581
2	**DANGER** Turn off all: • electric power supply • hydraulic pressure supply • air pressure supply to the robot, before entering the robot working area.	
3	**CAUTION** For robots with protection type Clean Room: Always cut the paint with a knife and grind the paint edge when disassembling parts of the robot! See *Replacing parts on the robot on page 138*	

Continues on next page

© Copyright 2014 - 2017 ABB. All rights reserved.

	Action	Note
4	Remove the wrist cover.	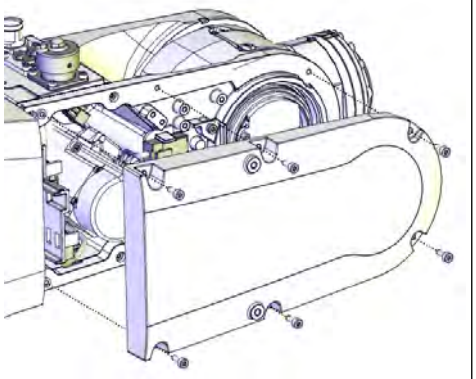 xx1300002389

Disconnecting the axis-5 motor connectors

	Action	Note
1	**DANGER** Make sure that all supplies for electrical power, hydraulic pressure, and air pressure are turned off.	
2	Snap loose the motor connectors from their holders and then disconnect them. • R3.MP5 • R3.ME5 **Tip** Take photos of the connector and cable position before disconnecting them, to have as a reference when reconnecting.	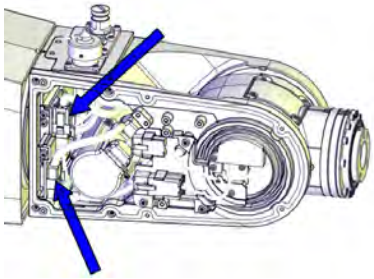 xx1300002360

Disconnecting the axis-5 FPC connectors

	Action	Note
1	**DANGER** Make sure that all supplies for electrical power, hydraulic pressure, and air pressure are turned off.	

Continues on next page

© Copyright 2014 - 2017 ABB. All rights reserved.

4.4.4 Replacing the axis-3 radial sealing and sealing ring

Continued

	Action	Note
2	Snap loose and disconnect the axis-5 FPC connectors.	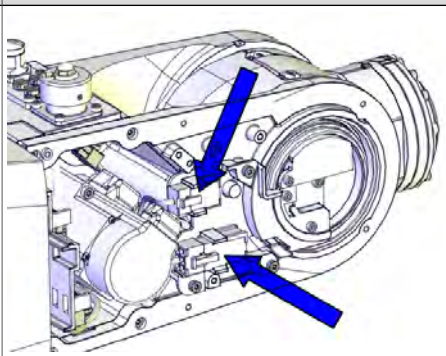 xx1300002390

Disconnecting the air hoses

	Action	Note
1	**DANGER** Make sure that all supplies for electrical power, hydraulic pressure, and air pressure are turned off.	
2	Disconnect the air hoses.	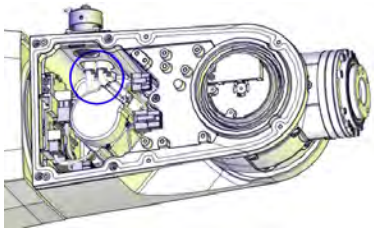 xx1400000738

Disconnecting the axis-4 FPC connectors

	Action	Note
1	**DANGER** Make sure that all supplies for electrical power, hydraulic pressure, and air pressure are turned off.	
2	**CAUTION** For robots with protection type Clean Room: Always cut the paint with a knife and grind the paint edge when disassembling parts of the robot! See *Replacing parts on the robot on page 138*	

Continues on next page

© Copyright 2014 - 2017 ABB. All rights reserved.

	Action	Note
3	Remove the cable housing cover.	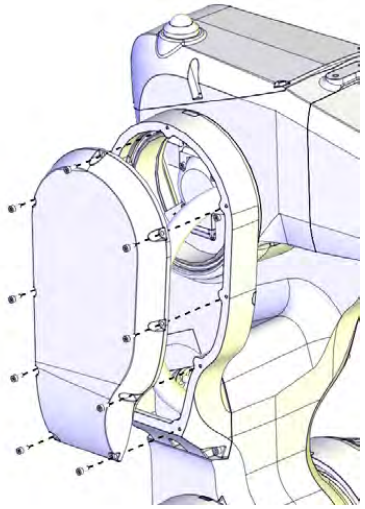 xx1300002400
4	Remove the plate.	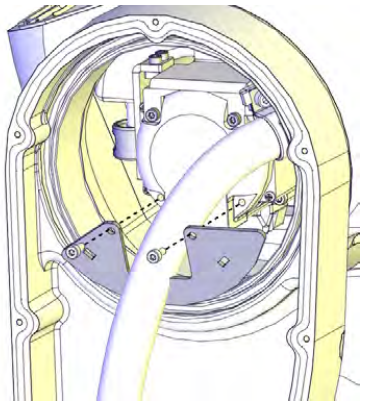 xx1300002413

Continues on next page

© Copyright 2014 - 2017 ABB. All rights reserved.

4.4.4 Replacing the axis-3 radial sealing and sealing ring

Continued

	Action	Note
5	Pull out the FPC connectors from the housing and disconnect them.	Cable layout in IRB 1200-7/0.7 : 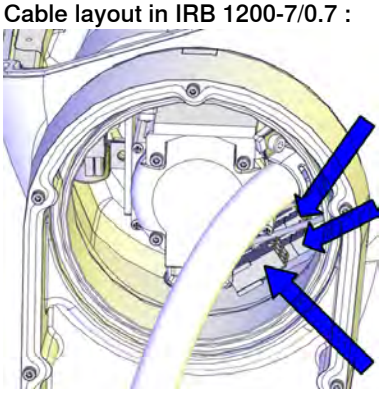 xx1300002412 Cable layout in IRB 1200-5/0.9 : 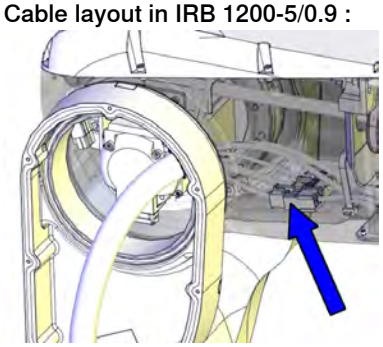 xx1400001471
6	Remove the small cover of the housing.	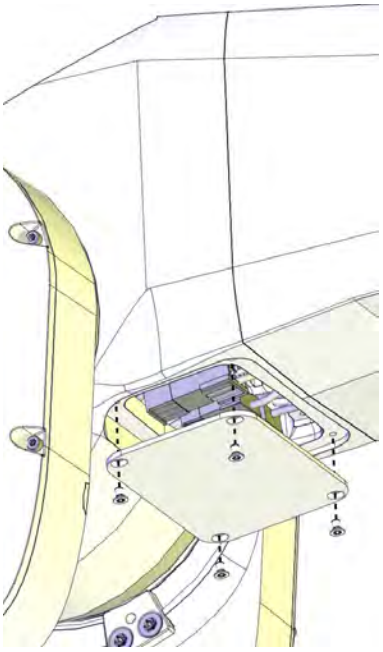 xx1300002398

Continues on next page

© Copyright 2014 - 2017 ABB. All rights reserved.

	Action	Note
7	Disconnect the remaining FPC connectors.	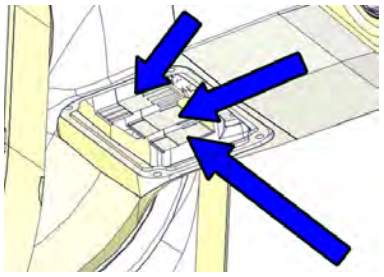 xx1300002399

Disconnecting the axis-4 motor connectors

	Action	Note
1	**DANGER** Make sure that all supplies for electrical power, hydraulic pressure, and air pressure are turned off.	
2	**CAUTION** For robots with protection type Clean Room: Always cut the paint with a knife and grind the paint edge when disassembling parts of the robot! See *Replacing parts on the robot on page 138*	
3	Remove the cover from the upper arm housing. **CAUTION** **For robots with safety lamp (option)** Be aware of the signal lamp cables that are attached inside the housing! Disconnect the lamp cable connectors R3.H1 and R3.H2 and then lift away the cover completely.	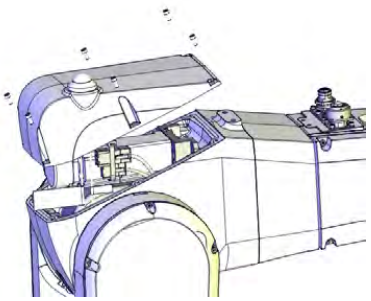 xx1300000456
4	Cut the strap that holds the connectors.	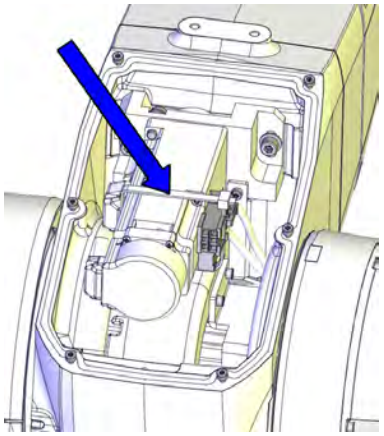 xx1300002494

Continues on next page

© Copyright 2014 - 2017 ABB. All rights reserved.

4.4.4 Replacing the axis-3 radial sealing and sealing ring

Continued

	Action	Note
5	Disconnect the motor connectors. **Tip** Take photos of the connector and cable position before disconnecting them, to have as a reference when reconnecting.	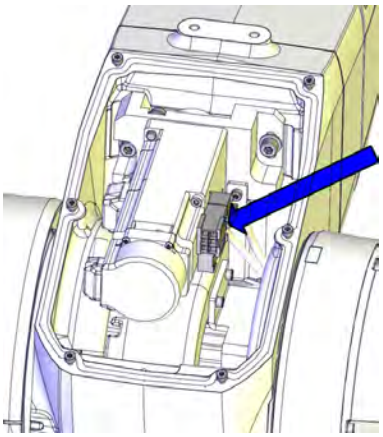 xx1300002495

Disconnecting the axis-3 motor connectors

	Action	Note
1	**DANGER** Make sure that all supplies for electrical power, hydraulic pressure, and air pressure are turned off.	
2	Pull out the axis-3 motor connectors from the housing and disconnect them.	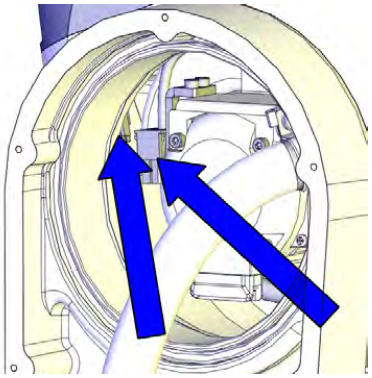 xx1300002420

Removing the cable package in the housing

	Action	Note
1	**DANGER** Make sure that all supplies for electrical power, hydraulic pressure, and air pressure are turned off.	

Continues on next page

© Copyright 2014 - 2017 ABB. All rights reserved.

	Action	Note
2	Remove the screw that fastens the air hose holder.	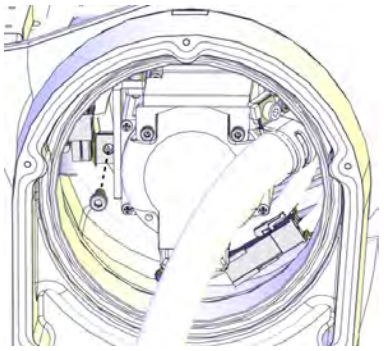 xx1300002422
3	Remove the screws that fasten the fix sheet to the inner plastic guide.	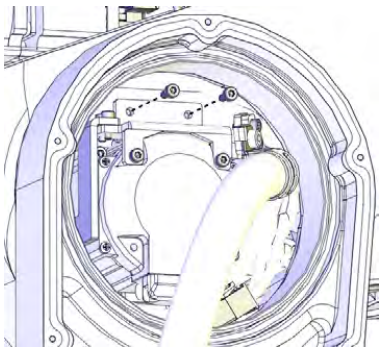 xx1300002421
4	Remove the screws that fasten the fix sheet to the motor.	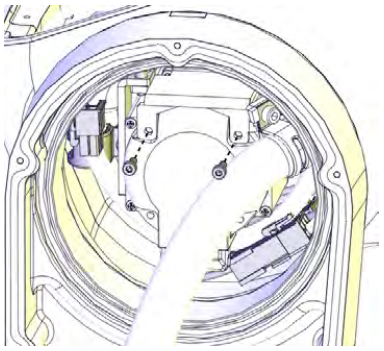 xx1300002423
5	Pull out the fix sheet a bit, to access the screws that fasten the cable bracket to the sheet. Loosen the bracket from the sheet by removing the two screws. **CAUTION** Do not loosen the cable clamp screw! There is a risk of rearrangement of the cable layout which would result in shortened lifetime of the cable harness.	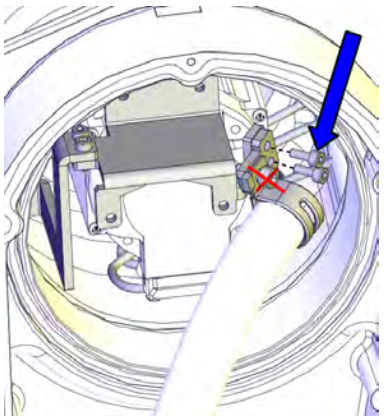 xx1300002424

Continues on next page

© Copyright 2014 - 2017 ABB. All rights reserved.

4.4.4 Replacing the axis-3 radial sealing and sealing ring

Continued

	Action	Note
6	**Valid for IRB 1200-5/0.9** Cut the cable straps at the bottom of the housing.	

Removing the lower arm cable housing

	Action	Note
1	**DANGER** Make sure that all supplies for electrical power, hydraulic pressure, and air pressure are turned off.	
2	**CAUTION** For robots with protection type Clean Room: Always cut the paint with a knife and grind the paint edge when disassembling parts of the robot! See *Replacing parts on the robot on page 138*	
3	Pull the cable harness out from the upper arm housing.	
4	Remove the cable housing of the lower arm by removing the screws.	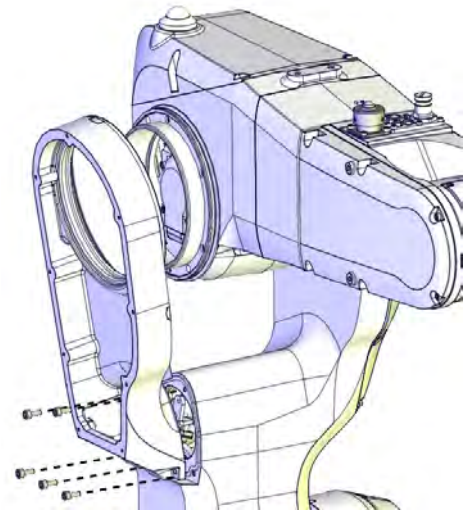 xx1300002529

Removing the axis-3 radial sealing

Use this procedure if the axis-3 radial sealing is to be removed.

	Action	Note
1	**DANGER** Make sure that all supplies for electrical power, hydraulic pressure, and air pressure are turned off.	

Continues on next page

© Copyright 2014 - 2017 ABB. All rights reserved.

	Action	Note
2	**CAUTION** **For robots with protection type Clean Room:** **Always cut the paint with a knife and grind the paint edge when disassembling parts of the robot!** See *Replacing parts on the robot on page 138*	
3	**For robots with protection class IP67 (option 287-10)** **For robots with protection type Foundry Plus (option 287-3)** Remove the M2 variseal sealing.	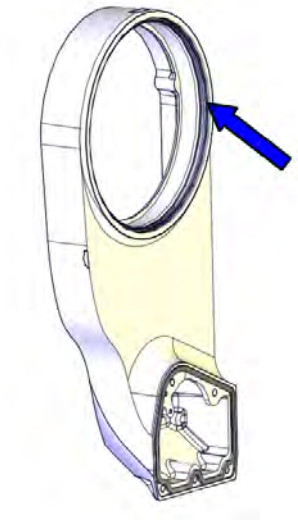 xx1400000473
4	Remove the axis-3 radial sealing.	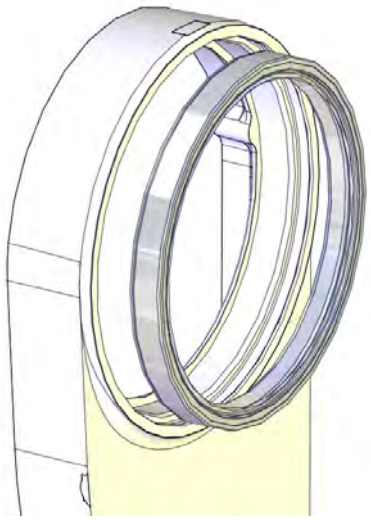 xx1400000334

Continues on next page

© Copyright 2014 - 2017 ABB. All rights reserved.

4.4.4 Replacing the axis-3 radial sealing and sealing ring

Continued

Removing the axis-3 sealing ring

Use this procedure if the axis-3 sealing ring is to be removed.

	Action	Note
1	**DANGER** Make sure that all supplies for electrical power, hydraulic pressure, and air pressure are turned off.	
2	**CAUTION** For robots with protection type Clean Room: Always cut the paint with a knife and grind the paint edge when disassembling parts of the robot! See *Replacing parts on the robot on page 138*	
3	Remove the screws.	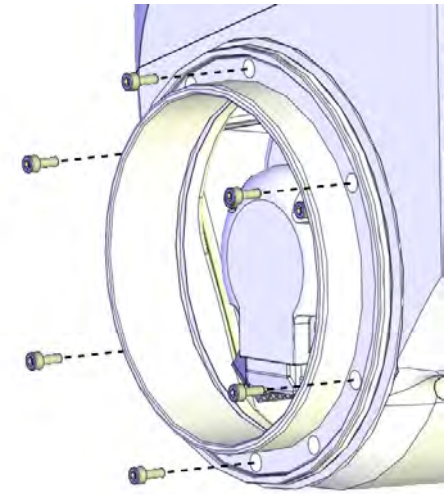 xx1400000332
4	Use screws in the two press out holes to press the sealing ring out.	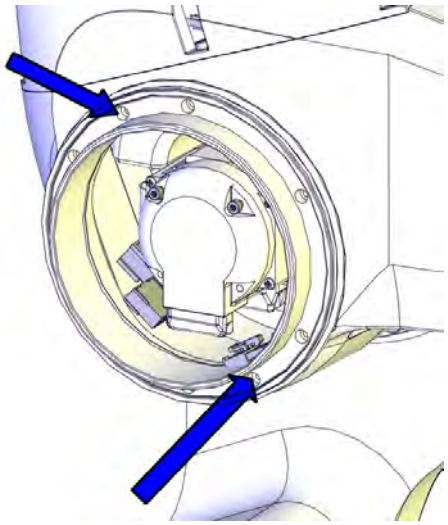 xx1400000333

Continues on next page

© Copyright 2014 - 2017 ABB. All rights reserved.

Refitting the sealings

Use these procedures to refit the axis-3 radial sealing and/or axis-3 sealing ring.

Refitting the axis-3 sealing ring

Use this procedure if the axis-3 sealing ring needs to be refitted.

	Action	Note
1	Clean Room robots: clean the joints that have been opened. See *Replacing parts on the robot on page 138*	
2	**For robots with protection class IP67 (option 287-10)** **For robots with protection type Foundry Plus (option 287-3)** Remove residual locking liquid and other pollutants with cleaning agent Loctite 7063. Apply flange sealing Loctite 574 on the mounting surfaces of the sealing ring. **Note** For Clean Room robots, wipe clean the overflowing Loctite 574 if there is any.	
3	Refit the axis-3 sealing ring by securing the screws. **Note** Make sure to use the correct screw holes. The two holes shown in the figure are only used for pressing out the ring during removal. 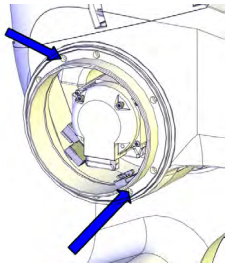 xx1400000333	Tightening torque: 1.5 Nm 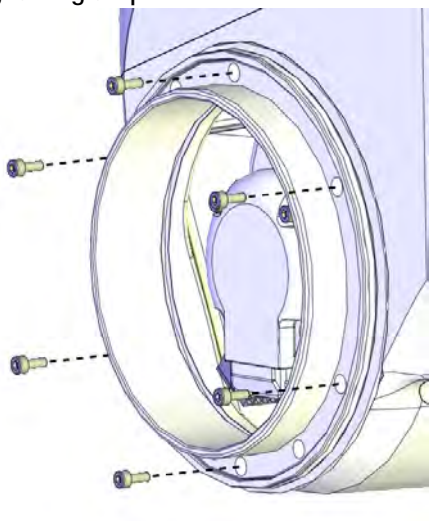 xx1400000332
4	Clean Room robots: seal and paint the joints that have been opened. See *Replacing parts on the robot on page 138* **Note** After all repair work, wipe the robot free from particles with spirit on a lint free cloth.	

Continues on next page

© Copyright 2014 - 2017 ABB. All rights reserved.

4.4.4 Replacing the axis-3 radial sealing and sealing ring

Continued

Refitting the axis-3 radial sealing

Use this procedure if the axis-3 radial sealing needs to be refitted.

	Action	Note
1	Clean Room robots: clean the joints that have been opened. See *Replacing parts on the robot on page 138*	
2	**For robots with protection type Clean Room** Apply a little grease to the sealing when replacing the radial sealing and wipe clean after the replacement.	
3	Fit the axis-3 radial sealing to the cable housing.	Radial sealing: 3HAC024865-001 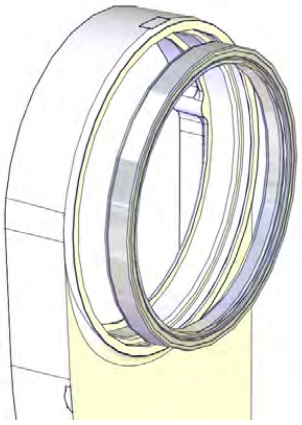 xx1400000334
4	Put the assembly tool on both sides of the cable housing, circular part against the sealing, and then slowly press the sealing into the housing by screwing the six screws (M6X50) into the plate little by little. Fit the circular part of the radial sealing fitting tool against the radial sealing.	Axis-3 sealing assembly tool set: 3HAC049697-001 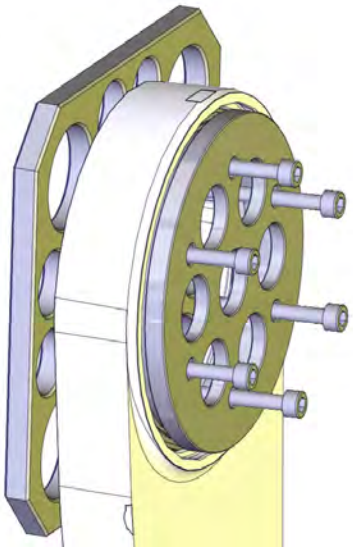 xx1400000335
5	Fit the tool plate to the other side of the cable housing with the six screws M6X50.	
6	Screw the screws, little by little, to press the sealing into place.	
7	Remove the assembly tool.	

Continues on next page

© Copyright 2014 - 2017 ABB. All rights reserved.

	Action	Note
8	**For robots with protection class IP67 (option 287-10)** **For robots with protection type Foundry Plus (option 287-3)** Fit a new M2 variseal sealing. **CAUTION** Do not fit M2 variseal sealing on Clean Room robots.	M2 variseal sealing: 3HAC044641-006 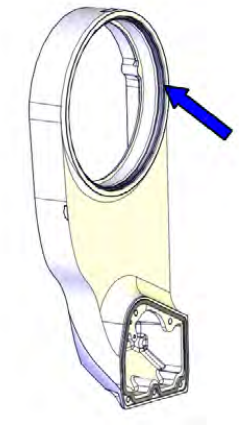 xx1400000473
9	Check that the sealings are undamaged and properly fitted.	
10	Clean Room robots: seal and paint the joints that have been opened. See *Replacing parts on the robot on page 138* **Note** After all repair work, wipe the robot free from particles with spirit on a lint free cloth.	

Refitting the lower arm cable housing

	Action	Note
1	Clean Room robots: clean the joints that have been opened. See *Replacing parts on the robot on page 138*	

Continues on next page

© Copyright 2014 - 2017 ABB. All rights reserved.

4.4.4 Replacing the axis-3 radial sealing and sealing ring

Continued

	Action	Note
2	**For robots with protection class IP67 (option 287-10)** **For robots with protection type Foundry Plus (option 287-3)** **For robots with with protection type Clean Room** **For robots with food grade lubrication** Check the cable housing gasket. Replace if damaged.	Gasket on lower arm cable housing: 3HAC044895-001 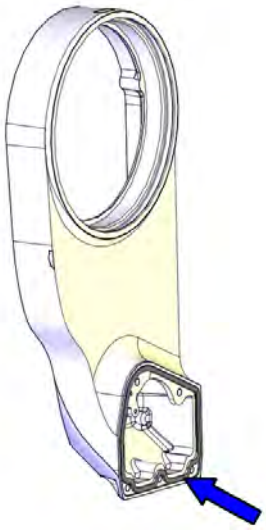 xx1400000414
3	**For robots with protection class IP67 (option 287-10)** **For robots with protection type Foundry Plus (option 287-3)** **For robots with with protection type Clean Room** **For robots with food grade lubrication** Check the radial sealing and the M2 variseal sealing. Replace if damaged. **Note** The M2 variseal sealing does not used for robots with protection type Clean room and with food grade lubrication. **Note** For Clean Room robots, apply a little grease to the sealing when replacing the radial sealing and wipe clean after the replacement. **CAUTION** Do not fit M2 variseal sealing on Clean Room robots.	Radial sealing: 3HAC024865-001 M2 variseal sealing: 3HAC044641-006 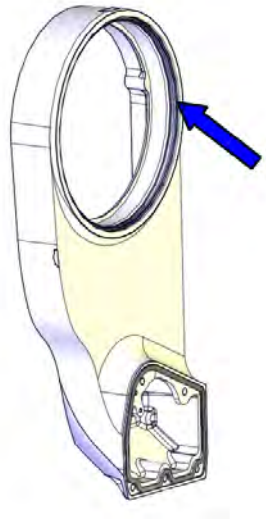 xx1400000473 Replacement of the radial sealing is detailed in previous section.

Continues on next page

© Copyright 2014 - 2017 ABB. All rights reserved.

	Action	Note
4	Refit the cable housing of the lower arm.	Tightening torque: 4 Nm. 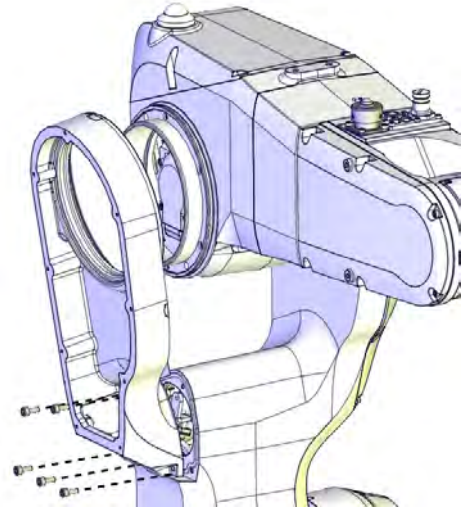 xx1300002529
5	**For robots with protection type Clean Room** Apply a string of the sealant Sikaflex 521FC to the joint of the cable housing of the lower arm. Smooth out the sealant string using a finger tip. Use washing-up on finger tips to get a smooth joint. If necessary, add extra sealant to get a full cover joint. **Note** No sealing is required in the cavities of the three lower screws highlighted with a ring in the figure.	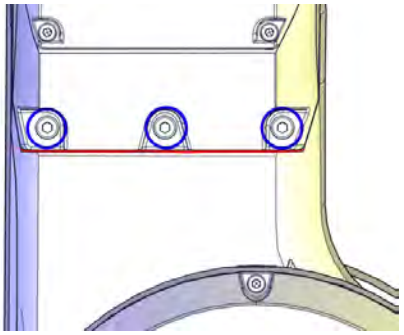 xx1600000218
6	Clean Room robots: seal and paint the joints that have been opened. See *Replacing parts on the robot on page 138* **Note** After all repair work, wipe the robot free from particles with spirit on a lint free cloth.	

Refitting the cable package in the housing

	Action	Note
1	Clean Room robots: clean the joints that have been opened. See *Replacing parts on the robot on page 138*	

Continues on next page

© Copyright 2014 - 2017 ABB. All rights reserved.

4.4.4 Replacing the axis-3 radial sealing and sealing ring

Continued

	Action	Note
2	Before guiding the cable package into the housing and upper arm, apply grease to the cable package, to the area going into the upper arm, shown in the figure. Cover all moving area of the package.	Area to be lubricated, shown in cable package already fitted to the housing. 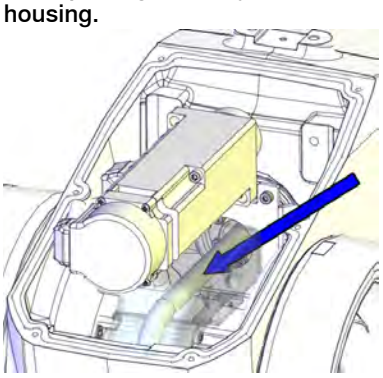 xx1400000483
3	Guide the cable package into the upper arm, through the housing. **Note** Guide the air hoses (A) underneath the bottom side of the axis-3 motor and the axis-3 motor cables (B) on top of the motor, see cable layout figure. The fix point of the air hoses is pre-determined (marked) and must be matched against the air hose holder on the left side of the axis-3 motor. **Note** The air hose holder keeps the air hoses arranged in an optimized way. It is necessary to keep the air hose holder vertically and firmly against the left side of the axis-3 motor.	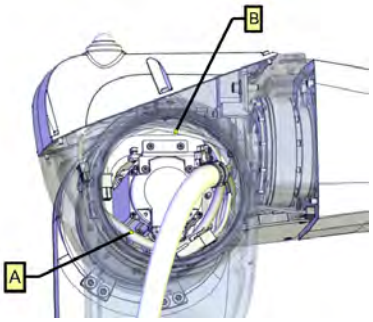 xx1400001472
4	Refit the bracket to the sheet with two screws. **CAUTION** Do not loosen the cable clamp screw! There is a risk of rearrangement of the cable layout which would result in shortened lifetime of the cable harness.	Tightening torque: 1.5 Nm. 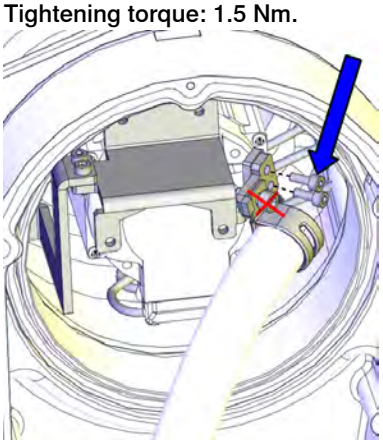 xx1300002424

Continues on next page

© Copyright 2014 - 2017 ABB. All rights reserved.

	Action	Note
5	Refit the fix sheet to the motor.	Tightening torque: 1.5 Nm. 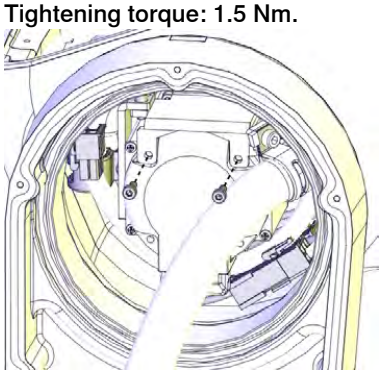 xx1300002423
6	Refit the fix sheet to the inner plastic guide.	Tightening torque: 1.5 Nm. 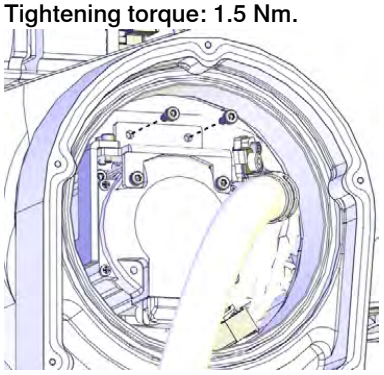 xx1300002421
7	Fit the air hose holder to the bracket. Replace the holder, if damaged. **Tip** If the air hose holder is difficult to fit, firstly remove the bracket from the fix sheet by removing the two M3 screws. Fit the holder to the bracket and then refit the complete assembly to the fix sheet again. Tightening torque for the two M3 screws: 1.5 Nm. 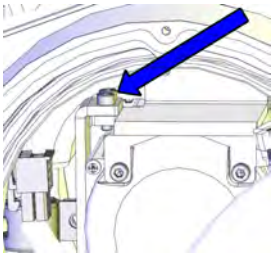 xx1400001133	Air hose holders are included in Cable harness material set (3HAC049663-001). Tightening torque: 4 Nm. 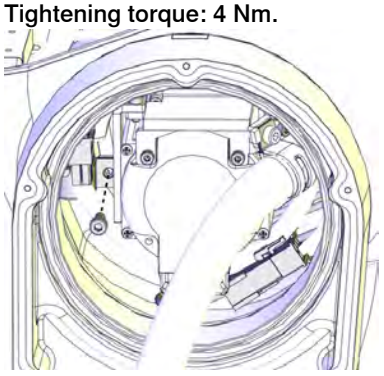 xx1300002422

Continues on next page

© Copyright 2014 - 2017 ABB. All rights reserved.

4.4.4 Replacing the axis-3 radial sealing and sealing ring

Continued

	Action	Note
8	Reconnect the axis-3 motor connectors.	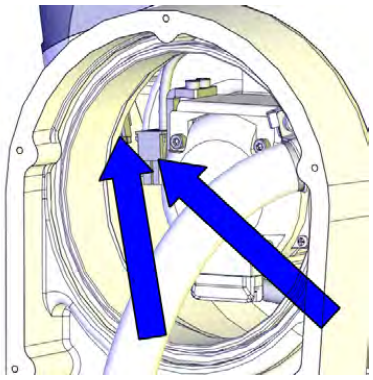 xx1300002420
9	Apply grease to the cable package, cover all moving area of the package.	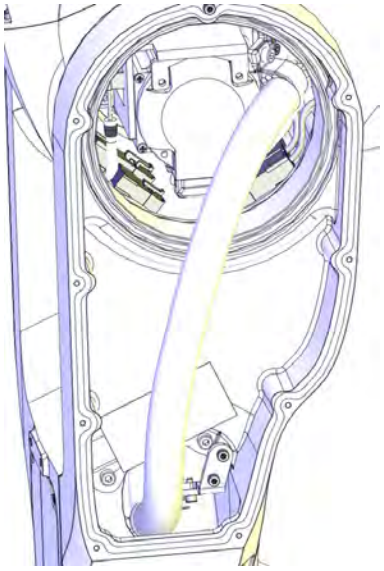 xx1400000754
10	**Valid for IRB 1200-5/0.9** Secure the cable package at the bottom of the housing with cable straps.	
11	Clean Room robots: seal and paint the joints that have been opened. See *Replacing parts on the robot on page 138* **Note** After all repair work, wipe the robot free from particles with spirit on a lint free cloth.	

Continues on next page

© Copyright 2014 - 2017 ABB. All rights reserved.

Connecting the axis-4 motor connectors

	Action	Note
1	Reconnect the motor connectors.	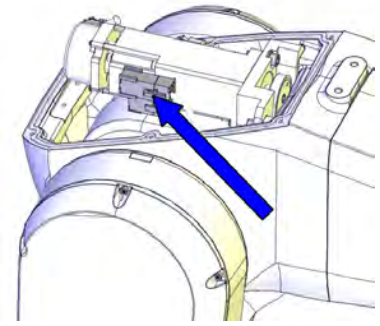 xx1300002371
2	Secure the connectors to the motor with a cable strap.	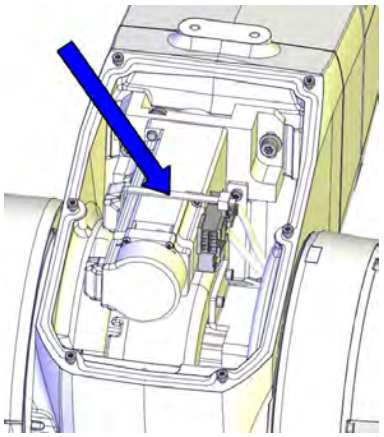 xx1300002494

Connecting the axis-4 FPC connectors

	Action	Note
1	Clean Room robots: clean the joints that have been opened. See *Replacing parts on the robot on page 138*	
2	Reconnect the FPC connectors. **Tip** See the number markings on the connectors for help to find the corresponding connector.	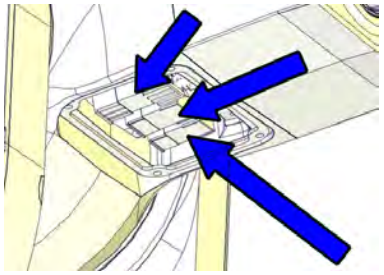 xx1300002399

Continues on next page

© Copyright 2014 - 2017 ABB. All rights reserved.

4.4.4 Replacing the axis-3 radial sealing and sealing ring

Continued

	Action	Note
3	Reconnect the FPC connectors and push them into place inside the housing. **Tip** See the number markings on the connectors for help to find the corresponding connector.	Cable layout in IRB 1200-7/0.7 : 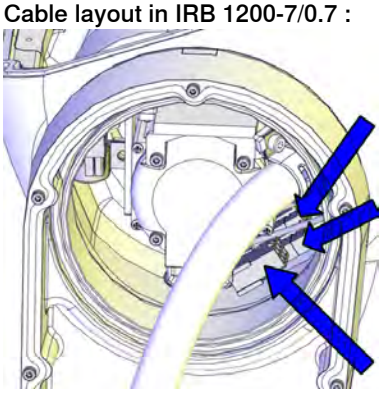 xx1300002412 Cable layout in IRB 1200-5/0.9 : 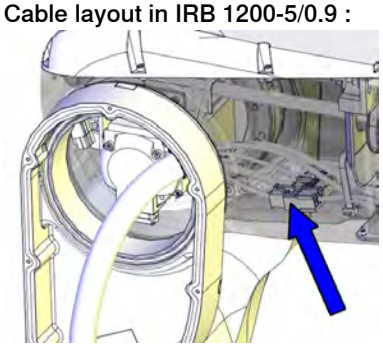 xx1400001471
4	Remove residual locking liquid and other pollutants with cleaning agent Loctite 7063.	

Continues on next page

© Copyright 2014 - 2017 ABB. All rights reserved.

	Action	Note
5	**For robots with protection class IP67 (option 287-10)** **For robots with protection type Foundry Plus (option 287-3)** Apply flange sealing Sikaflex 521FC on the mounting surfaces of the small cover on the housing.	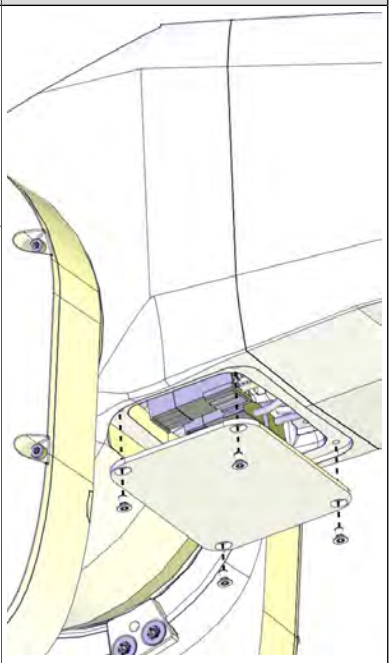 xx1300002398 Housing small cover: 3HAC059684-001 : 3HAC056142-001 (used with protection type Clean Room) Housing small cover, Clean Room Housing small cover, food grade lubrication Screws: 3HAC14286-4 (M3X5). Tightening torque: 1 Nm.
6	Refit the small cover to the housing. Replace if damaged.	
7	**For robots with protection type Clean Room** Apply a string of the sealant Sikaflex 521FC to the joint of the small cover on the housing. Smooth out the sealant string using a finger tip. Use washing-up on finger tips to get a smooth joint. If necessary, add extra sealant to get a full cover joint.	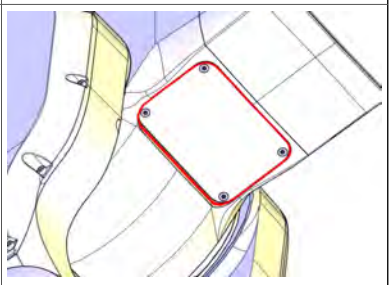 xx1600000214

Continues on next page

© Copyright 2014 - 2017 ABB. All rights reserved.

4.4.4 Replacing the axis-3 radial sealing and sealing ring
Continued

	Action	Note
8	Refit the plate.	Tightening torque: 1.5 Nm. 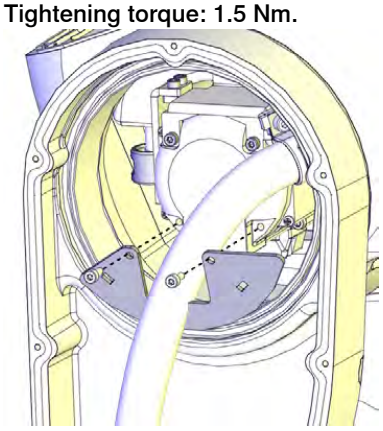 xx1300002413
9	Check the PTFE film on the cable housing. Replace if damaged.	PTFE film on lower arm cable housing: 3HAC044710-001 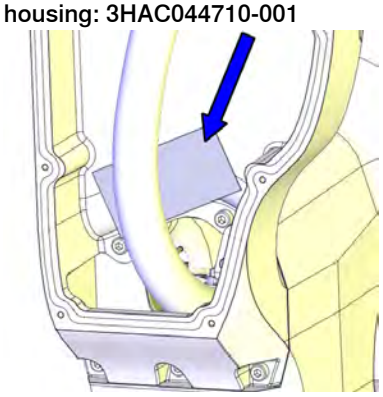 xx1400000740

Continues on next page

© Copyright 2014 - 2017 ABB. All rights reserved.

	Action	Note
10	**For robots with protection class IP67 (option 287-10)** **For robots with protection type Foundry Plus (option 287-3)** **For robots with with protection type Clean Room** **For robots with food grade lubrication** Check the gasket of the cable housing cover. Replace if damaged.	Gasket on cable housing cover: 3HAC056724-001 PTFE film on cable housing cover: 3HAC044660-001 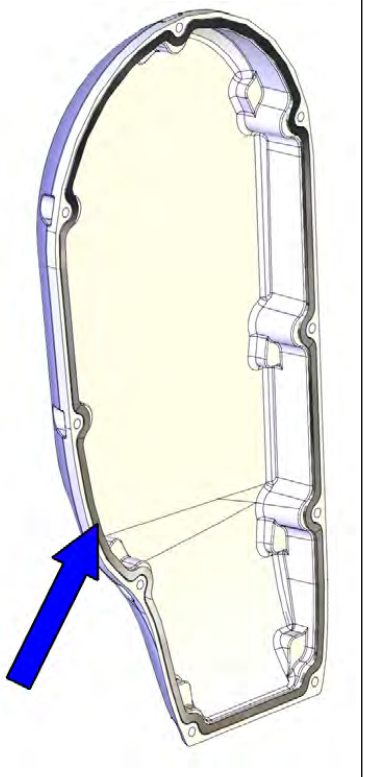 xx1400000048
11	Check the PTFE film on the cable housing cover. Replace if damaged.	
12	Apply grease to the inner surface of the cable housing cover and the PTFE film surface.	

Continues on next page

© Copyright 2014 - 2017 ABB. All rights reserved.

4.4.4 Replacing the axis-3 radial sealing and sealing ring

Continued

	Action	Note
13	Refit the cable housing cover.	Screws: 3HAB3409-207 (M3x8). Tightening torque: 1.5 Nm 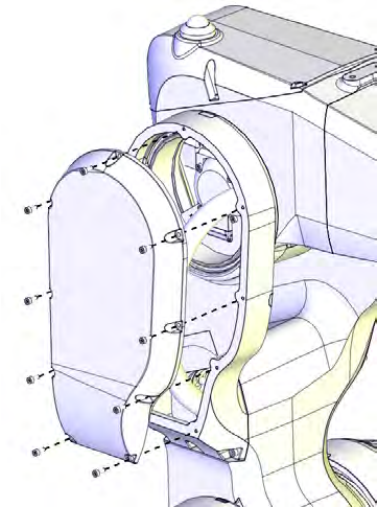 xx1300002400 **Note** Only use specified screws, never replace them with other screws.
14	Clean Room robots: seal and paint the joints that have been opened. See *Replacing parts on the robot on page 138* **Note** After all repair work, wipe the robot free from particles with spirit on a lint free cloth.	

Connecting the air hoses and CP/CS cabling (if equipped)

	Action	Note
1	Reconnect the air hoses.	Air connector set with Ethernet hole in flange: 3HAC049664-001 Air connector set without Ethernet hole in flange: 3HAC049665-001 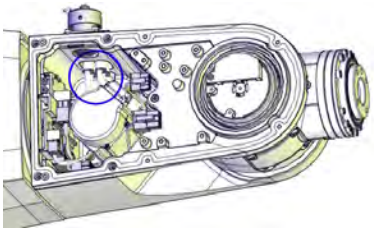 xx1400000738

Continues on next page

© Copyright 2014 - 2017 ABB. All rights reserved.

	Action	Note
2	If equipped, reconnect the CP/CS connector. **For robots with protection class IP67 (option 287-10)** **For robots with protection type Foundry Plus (option 287-3)** 1 Check the gasket. 2 Replace if damaged. **For robots with protection type Clean Room:** 1 Remove residual locking liquid and other pollutants with cleaning agent Loctite 7063. 2 Apply flange sealing Loctite 574 on the mounting surfaces of the CP/CS connector and wipe clean if there is any overflowing Loctite 574.	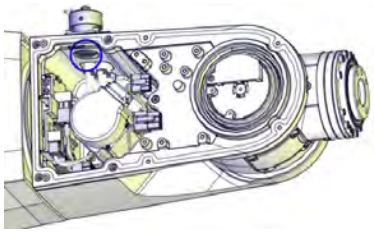 xx1500000252 On robots with protection class IP67 On robots with protection type Foundry Plus Gasket: 3HAC058567-001 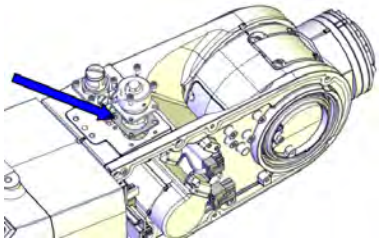 xx1500000251
3	**For robots with protection type Foundry Plus** If required, fit the protection bracket for CP/CS connectors.	Protection bracket for CP/CS connectors: 3HAC058350-001 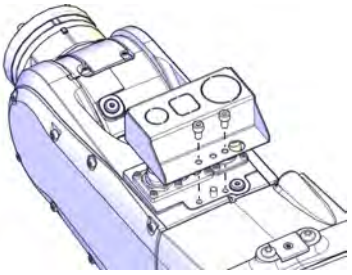 xx1600001152

Connecting the axis-5 motor FPC connectors

	Action	Note
1	Connect the axis-5 FPC connectors and snap them to their holders.	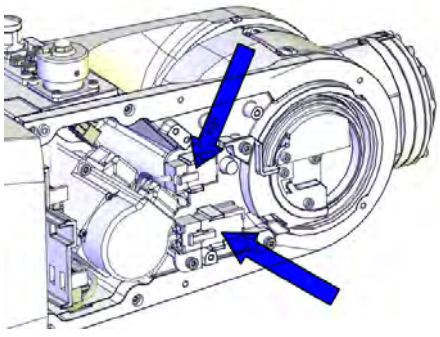 xx1300002390

Continues on next page

© Copyright 2014 - 2017 ABB. All rights reserved.

4.4.4 Replacing the axis-3 radial sealing and sealing ring

Continued

Connecting the axis-5 motor connectors

	Action	Note
1	Reconnect the motor cables. • R3.MP5 • R3.ME5	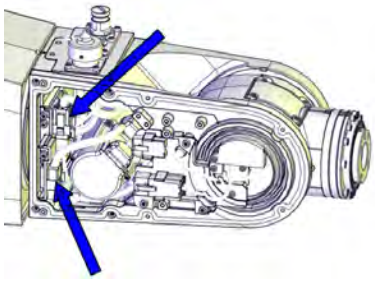 xx1300002360

Refitting the tubular cable housing cover

	Action	Note
1	Clean Room robots: clean the joints that have been opened. See *Replacing parts on the robot on page 138*	
2	**For robots with protection class IP67 (option 287-10)** **For robots with protection type Foundry Plus (option 287-3)** **For robots with with protection type Clean Room** **For robots with food grade lubrication** Check the tubular cable housing cover gasket. Replace if damaged.	Gasket for tubular cable housing cover: 3HAC056707-001 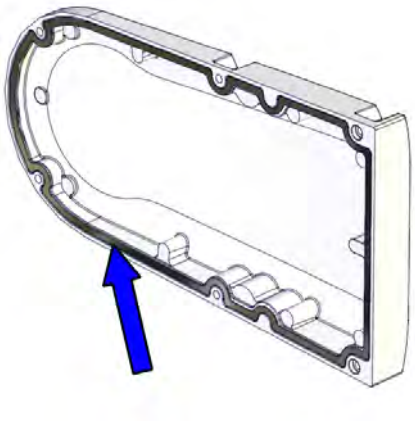 xx1400000345

Continues on next page

© Copyright 2014 - 2017 ABB. All rights reserved.

	Action	Note
3	Refit the cover to the cable housing.	Screws: 3HAB3409-207 (M3x8). Tightening torque: 1.5 Nm. 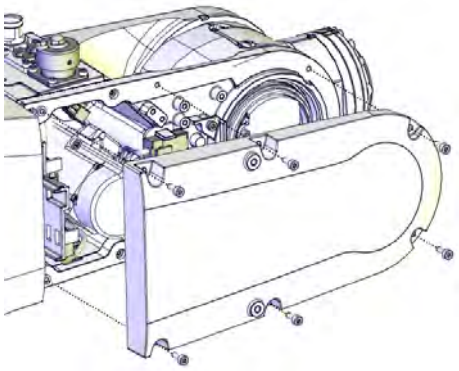 xx1300002389 **Note** Only use specified screws, never replace them with other screws.
4	Clean Room robots: seal and paint the joints that have been opened. See *Replacing parts on the robot on page 138* **Note** After all repair work, wipe the robot free from particles with spirit on a lint free cloth.	

Concluding procedure

	Action	Note
1	**For robots with protection class IP67 (option 287-10)** **For robots with protection type Foundry Plus (option 287-3)** **For robots with with protection type Clean Room** **For robots with food grade lubrication** Check the gasket. Replace if damaged.	Housing cover gasket (IRB 1200-7/0.7): 3HAC056698-001 Housing cover gasket (IRB 1200-5/0.9): 3HAC056697-001 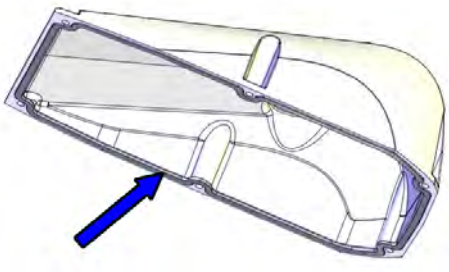 xx1400000477

Continues on next page

© Copyright 2014 - 2017 ABB. All rights reserved.

4.4.4 Replacing the axis-3 radial sealing and sealing ring

Continued

	Action	Note
2	Refit the upper arm housing cover with the screws. **CAUTION** **For robots with safety lamp (option)** Reconnect the lamp cable connectors R3.H1 and R3.H2 and then secure the cover.	Screws: 3HAB3409-207 (M3x8). Tightening torque: 1.5 Nm. 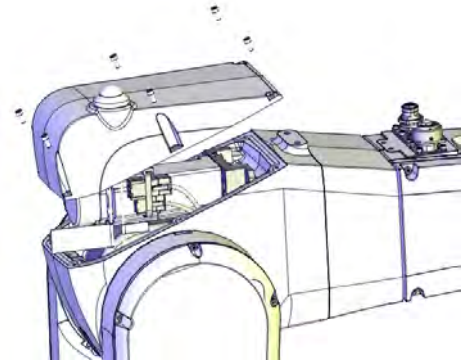 xx1300000456 **Note** Only use specified screws, never replace them with other screws.
3	**For robots with protection type Clean Room** Apply a string of the sealant Sikaflex 521FC to the joint of the upper arm housing cover. Smooth out the sealant string using a finger tip. Use washing-up on finger tips to get a smooth joint. If necessary, add extra sealant to get a full cover joint.	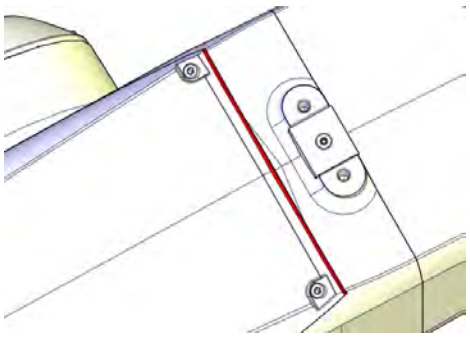 xx1600000215
4	For robots with protection type Clean Room: Clean and paint the joints that have been opened. See *Replacing parts on the robot on page 138* **Note** After all repair work, wipe the Clean Room robot free from particles with spirit on a lint free cloth.	
5	**DANGER** Make sure all safety requirements are met when performing the first test run. These are further detailed in the section *DANGER - First test run may cause injury or damage! on page 48*.	

© Copyright 2014 - 2017 ABB. All rights reserved.

4.4.5 Replacing the axis-2 mechanical stop

Location of the mechanical stop

The axis-2 mechanical stop is located as shown in the figure.

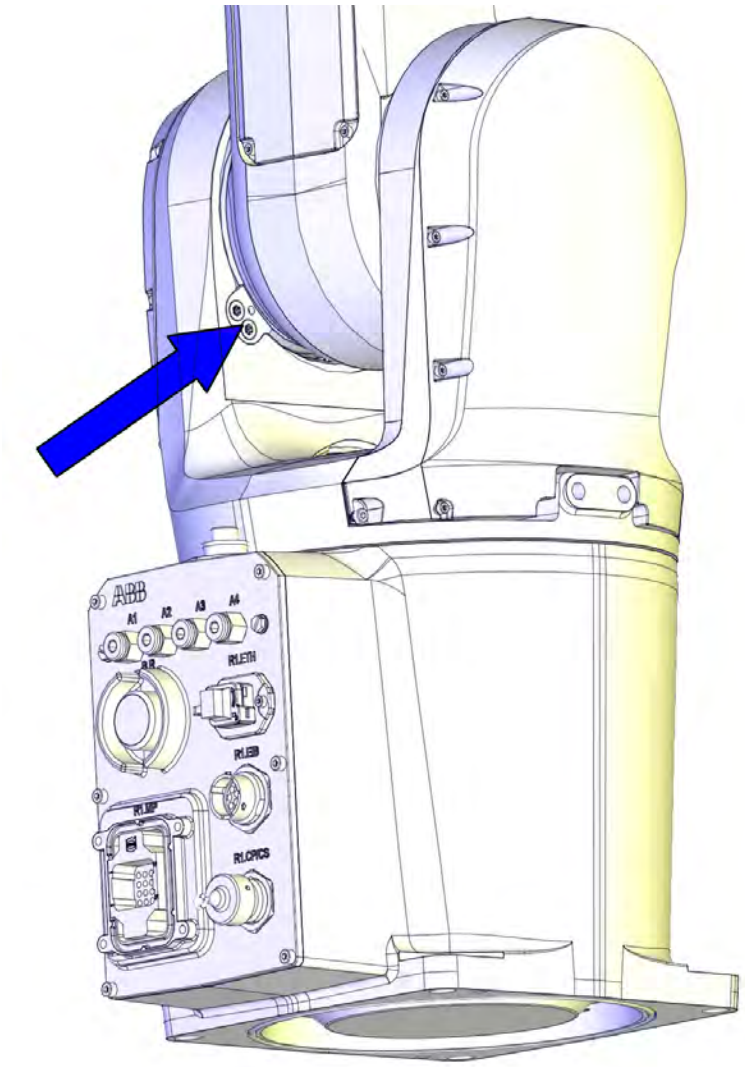

xx1400000389

Required spare parts

Note

The spare part numbers that are listed in the table can be out of date. See the latest revision of *Product manual, spare parts - IRB 1200* on ABB Library.

Spare part	Article number	Note
Mechanical stop set, axis 2	3HAC049637-001	Includes mechanical stop pin (1 pc) and screws.

Continues on next page

© Copyright 2014 - 2017 ABB. All rights reserved.

4.4.5 Replacing the axis-2 mechanical stop

Continued

Required tools and equipment

Equipment, etc.	Article number	Note
24 VDC power supply	-	Used to release the motor brakes.
Standard toolkit	-	Content is defined in section *Standard toolkit on page 808*.

Replacing the mechanical stop

Use these procedures to remove the axis-2 mechanical stop.

Preparations before removing the mechanical stop

	Action	Note
1	Jog the robot to a position where the mechanical stop is most easily accessed.	
2	**DANGER** Turn off all: • electric power supply • hydraulic pressure supply • air pressure supply to the robot, before entering the robot working area.	

Replacing the axis-2 mechanical stop

	Action	Note
1	**DANGER** Make sure that all supplies for electrical power, hydraulic pressure, and air pressure are turned off.	
2	**CAUTION** For robots with protection type Clean Room: Always cut the paint with a knife and grind the paint edge when disassembling parts of the robot! See *Replacing parts on the robot on page 138*	

Continues on next page

© Copyright 2014 - 2017 ABB. All rights reserved.

	Action	Note
3	Remove the mechanical stop by removing the screws.	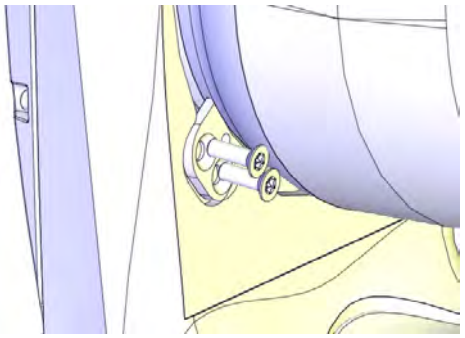 xx1400000390 Screws: 9ADA624-45 (M5x16). Tightening torque: 4 Nm. **Note** Only use specified screws, never replace them with other screws.
4	Discard the old screws.	
5	Refit and secure the new stop with the enclosed screws.	
6	**DANGER** Make sure all safety requirements are met when performing the first test run. These are further detailed in the section *DANGER - First test run may cause injury or damage! on page 48*.	

© Copyright 2014 - 2017 ABB. All rights reserved.

4.4.6 Replacing the axis-3 mechanical stop

Location of the mechanical stop

The axis-3 mechanical stop is located as shown in the figure.

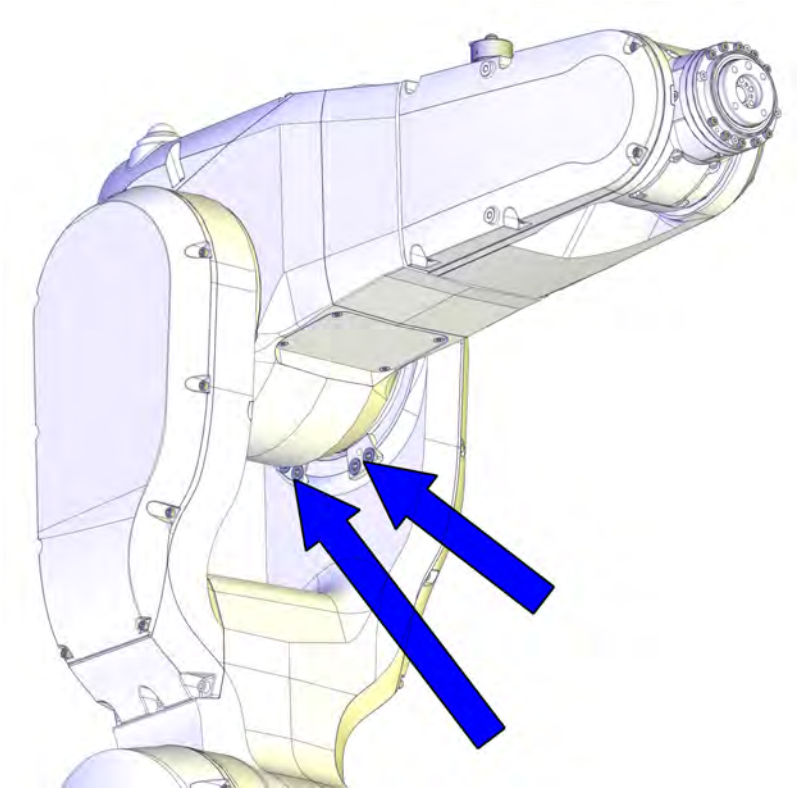

xx1400000386

Required spare parts

Note

The spare part numbers that are listed in the table can be out of date. See the latest revision of *Product manual, spare parts - IRB 1200* on ABB Library.

Spare part	Article number	Note
Mechanical stop set, axis 3	3HAC049644-001	Includes mechanical stop pin (1 pc) and screws.

Required tools and equipment

Equipment, etc.	Article number	Note
24 VDC power supply	-	Used to release the motor brakes.
Standard toolkit	-	Content is defined in section *Standard toolkit on page 808*.

Continues on next page

© Copyright 2014 - 2017 ABB. All rights reserved.

Replacing the mechanical stop

Use these procedures to replace the axis-3 mechanical stop.

Preparations before removing the mechanical stop

	Action	Note
1	Jog the robot to a position where the mechanical stops are most easily accessed.	
2	**DANGER** Turn off all: • electric power supply • hydraulic pressure supply • air pressure supply to the robot, before entering the robot working area.	

Replacing the axis-3 mechanical stop

	Action	Note
1	**DANGER** Make sure that all supplies for electrical power, hydraulic pressure, and air pressure are turned off.	
2	**CAUTION** For robots with protection type Clean Room: Always cut the paint with a knife and grind the paint edge when disassembling parts of the robot! See *Replacing parts on the robot on page 138*	

Continues on next page

© Copyright 2014 - 2017 ABB. All rights reserved.

4.4.6 Replacing the axis-3 mechanical stop

Continued

	Action	Note
3	Remove the mechanical stop to be replaced by removing the screws.	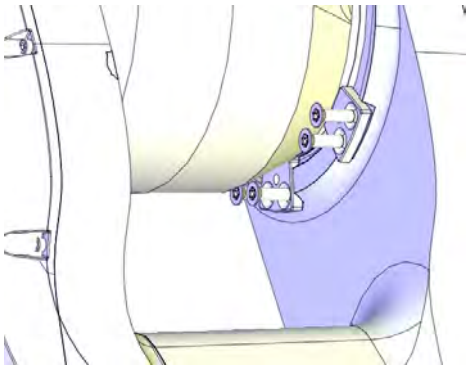 xx1400000387 Screws: 9ADA624-45 (M5x16). Tightening torque: 4 Nm **Note** Only use specified screws, never replace them with other screws.
4	Discard the old screws.	
5	Refit and secure the new stop with the enclosed screws.	
6	**DANGER** Make sure all safety requirements are met when performing the first test run. These are further detailed in the section *DANGER - First test run may cause injury or damage! on page 48*.	

© Copyright 2014 - 2017 ABB. All rights reserved.

4.4.7 Replacing the axis-4 mechanical stop

WARNING

The mechanical stop needs to be inspected immediately if it gets hit. Replace the mechanical stop if damage is detected. Access to and inspection of the stop requires disassembly of the robot according to this section.

Location of the mechanical stop

The axis-4 mechanical stop is located inside the housing extender unit, as shown in the figure.

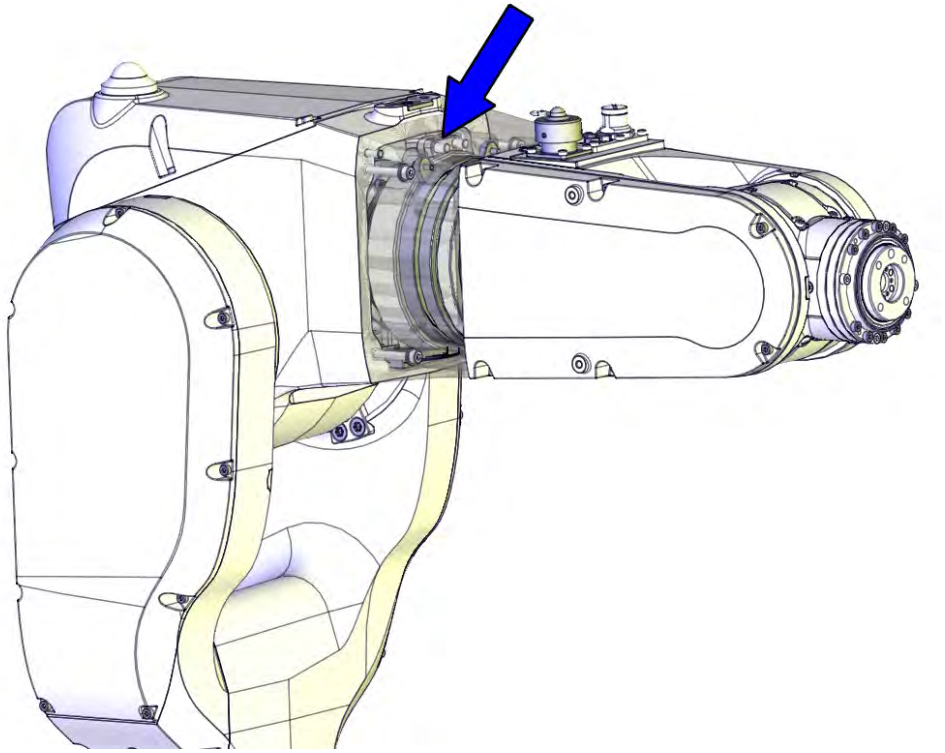

xx1300002416

Required spare parts

Note

The spare part numbers that are listed in the table can be out of date. See the latest revision of *Product manual, spare parts - IRB 1200* on ABB Library.

Spare part	Article number	Note
Mechanical stop set	3HAC049652-001	Includes mechanical stop pin, guide, slider and screws.

Continues on next page

© Copyright 2014 - 2017 ABB. All rights reserved.

4.4.7 Replacing the axis-4 mechanical stop

Continued

Spare part	Article number	Note
M2 variseal sealing	3HAC044641-007	Used with protection class IP67. Used with protection type Foundry Plus. Replace if damaged.
Radial sealing with dust lip	3HAB3701-48	Not used with protection class IP40. Replace if damaged.
Housing small cover	3HAC059684-001	Replace if damaged.
Housing small cover, Clean Room Housing small cover, food grade lubrication	3HAC056142-001	Used with protection type Clean Room. Used for robots with food grade lubrication. Replace if damaged.
PTFE film on lower arm cable housing	3HAC044710-001	Replace if damaged.
Gasket on cable housing cover	3HAC056724-001	Not used with protection class IP40. Replace if damaged.
PTFE film on cable housing cover	3HAC044660-001	Replace if damaged.
Washer	3HAC044869-001	Replace if damaged
Gasket for tubular cover	3HAC058822-001	Not used with protection class IP40. Replace if damaged.
Gasket for tubular cable housing cover	3HAC056707-001	Not used with protection class IP40. Replace if damaged.

Required tools and equipment

Equipment, etc.	Article number	Note
Axis-4 sealing assembly tool set	3HAC049699-001	Used to refit the radial sealing, if replacement is needed.
24 VDC power supply	-	Used to release the motor brakes.
Standard toolkit	-	Content is defined in section *Standard toolkit on page 808*.

Required consumables

Consumable	Art. no.	Note
Cleaning agent	-	Loctite 7063
Flange sealing	12340011-116	Loctite 574 Used with protection class IP67. Used with protection type Foundry Plus.
Flange sealing	3HAC026759-001	Sikaflex 521FC
Locking liquid	3HAB7116-1	Loctite 243

Continues on next page

© Copyright 2014 - 2017 ABB. All rights reserved.

Deciding calibration routine

Decide which calibration routine to be used, based on the information in the table. Depending on which routine is chosen, action might be required prior to beginning the repair work of the robot, see the table.

	Action	Note
1	Decide which calibration routine to use for calibrating the robot. • Reference calibration. External cable packages (DressPack) and tools can stay fitted on the robot. • Fine calibration. All external cable packages (DressPack) and tools must be removed from the robot.	**Note** Calibrating axis 6 always requires tools to be removed from the mounting flange (also for reference calibration) since the mounting flange is used for installation of the calibration tool.
	If the robot is to be calibrated with reference calibration: Find previous reference values for the axis or create new reference values. These values are to be used after the repair procedure is completed, for calibration of the robot. If no previous reference values exist, and no new reference values can be created, then reference calibration is not possible.	Follow the instructions given in the reference calibration routine on the FlexPendant to create reference values. Creating new values requires possibility to move the robot. Read more about reference calibration for Axis Calibration in *Reference calibration routine on page 743*.
	If the robot is to be calibrated with fine calibration: Remove all external cable packages (DressPack) and tools from the robot.	

Removing the mechanical stop

Use these procedures to remove the mechanical stop.

Preparations before removing the axis-4 mechanical stop

	Action	Note
1	Decide which calibration routine to use, and take actions accordingly prior to beginning the repair procedure.	
2	Jog all axes to zero position.	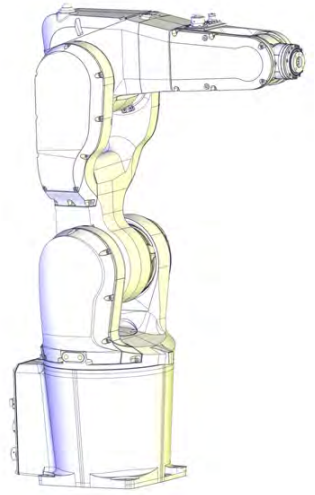 xx1300002581

Continues on next page

© Copyright 2014 - 2017 ABB. All rights reserved.

4.4.7 Replacing the axis-4 mechanical stop

Continued

	Action	Note
3	**DANGER** Turn off all: • electric power supply • hydraulic pressure supply • air pressure supply to the robot, before entering the robot working area.	

Getting access to inside of the wrist unit

	Action	Note
1	**DANGER** Make sure that all supplies for electrical power, hydraulic pressure, and air pressure are turned off.	
2	**CAUTION** For robots with protection type Clean Room: Always cut the paint with a knife and grind the paint edge when disassembling parts of the robot! See *Replacing parts on the robot on page 138*	

Continues on next page

© Copyright 2014 - 2017 ABB. All rights reserved.

	Action	Note
3	Remove the covers on each side of the wrist by removing their screws. **Note** **For robots with protection class IP67 (option 287-10)** **For robots with protection type Foundry Plus (option 287-3)** The two front screws on the left hand side cover (encircled in the figure) have been fitted with locking liquid. The tubular cover (left hand side cover) has two extra screws and washers, as encircled in the figure. **Note** **For robots with protection type Clean Room** The tubular cover (left hand side cover) has two extra screws and washers, as encircled in the figure.	For robots with protection class IP67 (option 287-10) For robots with protection type Foundry Plus (option 287-3) 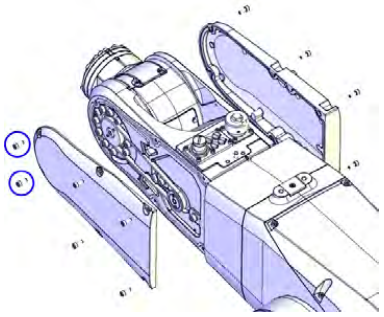 xx1300002349 For robots with protection type Clean Room 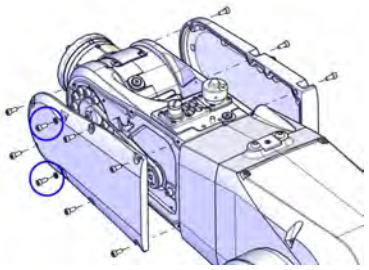 xx1600001148

Disconnecting the axis-5 motor connectors

	Action	Note
1	**DANGER** Make sure that all supplies for electrical power, hydraulic pressure, and air pressure are turned off.	
2	Snap loose the motor connectors from their holders and then disconnect them. • R3.MP5 • R3.ME5 **Tip** Take photos of the connector and cable position before disconnecting them, to have as a reference when reconnecting.	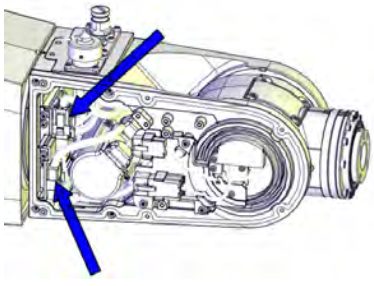 xx1300002360

Continues on next page

© Copyright 2014 - 2017 ABB. All rights reserved.

4.4.7 Replacing the axis-4 mechanical stop

Continued

Removing the axis-5 motor with pulley

	Action	Note
1	**DANGER** Make sure that all supplies for electrical power, hydraulic pressure, and air pressure are turned off.	
2	**CAUTION** For robots with protection type Clean Room: Always cut the paint with a knife and grind the paint edge when disassembling parts of the robot! See *Replacing parts on the robot on page 138*	
3	Loosen the screws so that the motor can be moved sideways.	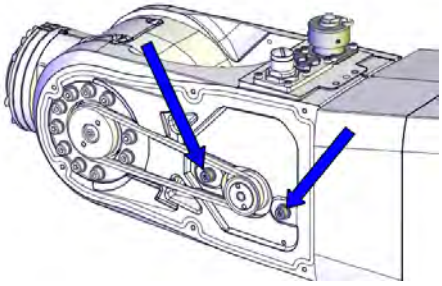 xx1300002350
4	Remove the timing belt.	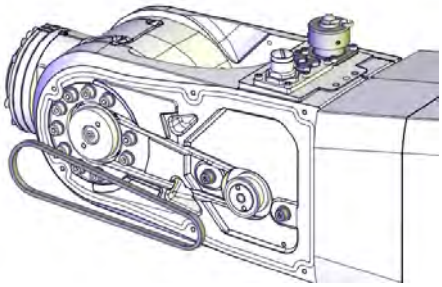 xx1300002351
5	Snap loose and disconnect the axis-5 FPC connectors.	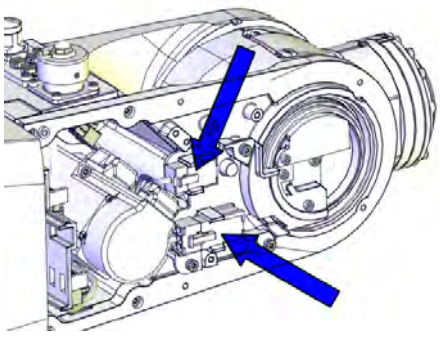 xx1300002390

Continues on next page

© Copyright 2014 - 2017 ABB. All rights reserved.

	Action	Note
6	Remove the screws and pull out the motor.	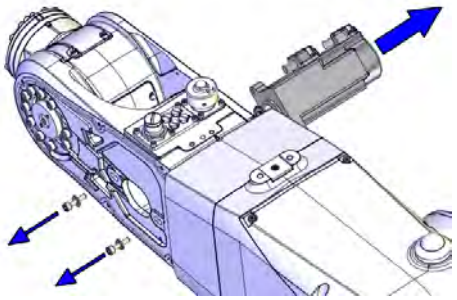 xx1300002352

Removing the wrist

	Action	Note
1	**DANGER** Make sure that all supplies for electrical power, hydraulic pressure, and air pressure are turned off.	
2	**CAUTION** For robots with protection type Clean Room: Always cut the paint with a knife and grind the paint edge when disassembling parts of the robot! See *Replacing parts on the robot on page 138*	
3	Disconnect the connectors shown in the figure.	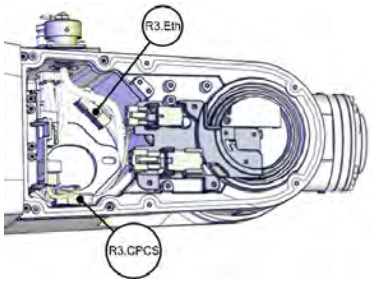 xx1300002353
4	Disconnect the air hoses.	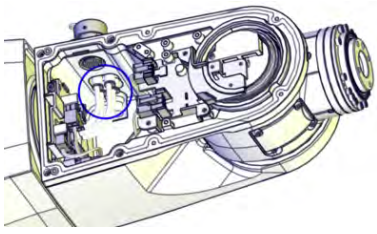 xx1300002355

Continues on next page

© Copyright 2014 - 2017 ABB. All rights reserved.

4.4.7 Replacing the axis-4 mechanical stop

Continued

	Action	Note
5	Remove the connector plate attachment screws.	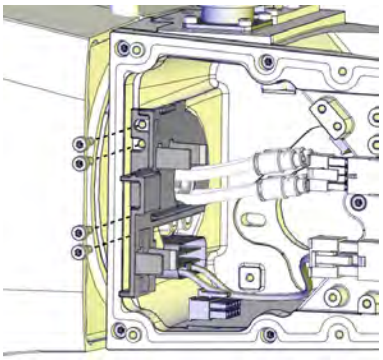 xx1300002356
6	Guide the hoses through the plate hole and remove the plate.	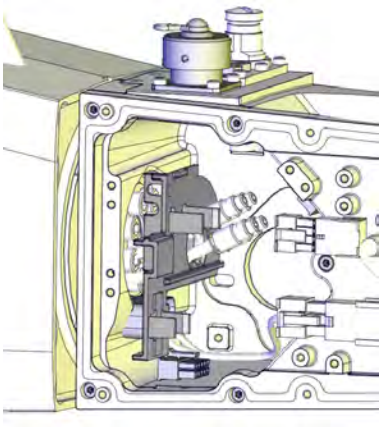 xx1300002357
7	Support the weight of the wrist and remove the screws and the washer.	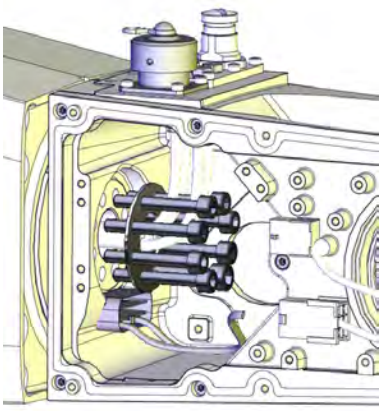 xx1300002358

Continues on next page

© Copyright 2014 - 2017 ABB. All rights reserved.

	Action	Note
8	Pull out the wrist carefully while at the same time pulling all connectors and the air hoses out of the wrist. Be careful not to damage the FPC cabling and the connectors. **CAUTION** Pay special attention to the plastic block on the FPC unit. It is easily pulled off, make sure it stays fitted to the FPC unit. 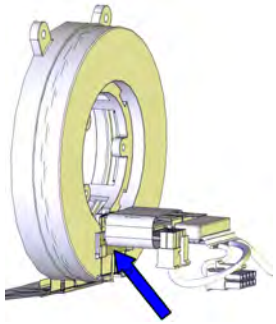 xx1300002611	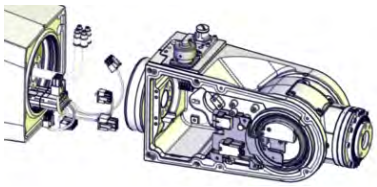 xx1300002359

Disconnecting the axis-4 FPC connectors

	Action	Note
1	**DANGER** Make sure that all supplies for electrical power, hydraulic pressure, and air pressure are turned off.	
2	**CAUTION** For robots with protection type Clean Room: Always cut the paint with a knife and grind the paint edge when disassembling parts of the robot! See *Replacing parts on the robot on page 138*	

Continues on next page

© Copyright 2014 - 2017 ABB. All rights reserved.

4.4.7 Replacing the axis-4 mechanical stop

Continued

	Action	Note
3	Remove the cable housing cover.	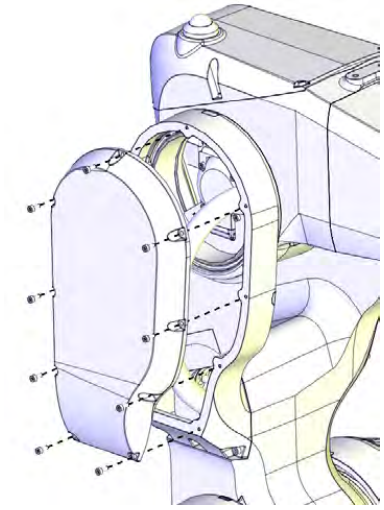 xx1300002400
4	Remove the plate.	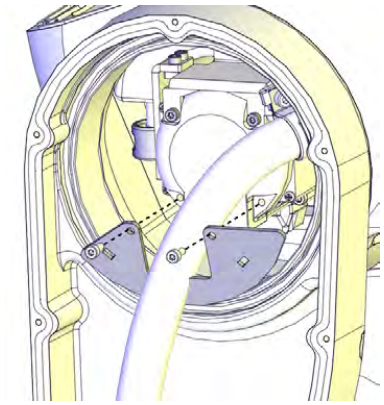 xx1300002413

Continues on next page

© Copyright 2014 - 2017 ABB. All rights reserved.

	Action	Note
5	Pull out the FPC connectors from the housing and disconnect them.	Cable layout in IRB 1200-7/0.7 : 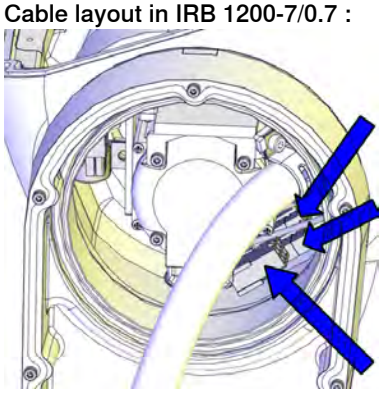 xx1300002412 Cable layout in IRB 1200-5/0.9 : 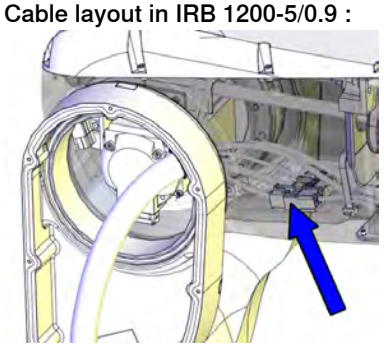 xx1400001471
6	Remove the small cover of the housing.	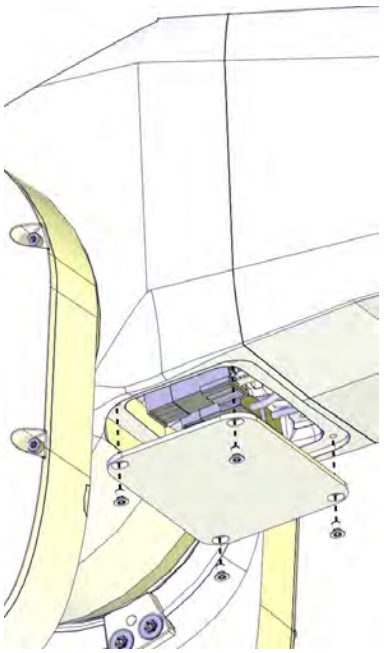 xx1300002398

Continues on next page

© Copyright 2014 - 2017 ABB. All rights reserved.

4.4.7 Replacing the axis-4 mechanical stop

Continued

	Action	Note
7	Disconnect the remaining FPC connectors.	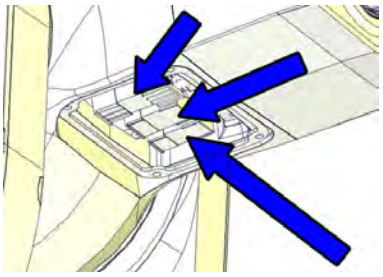 xx1300002399

Removing the housing extender unit

	Action	Note
1	**CAUTION** For robots with protection type Clean Room: Always cut the paint with a knife and grind the paint edge when disassembling parts of the robot! See *Replacing parts on the robot on page 138*	
2	Remove the axis-4 FPC unit screws.	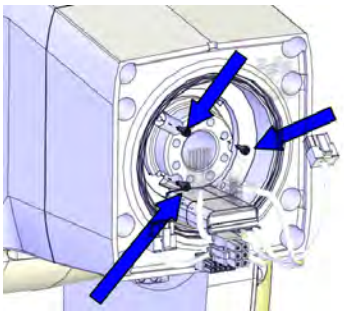 xx1300002373
3	**For robots with protection type Clean Room** **For robots with protection type Foundry Plus** Remove the plugs covering the extender unit screws with a needle-nose plier.	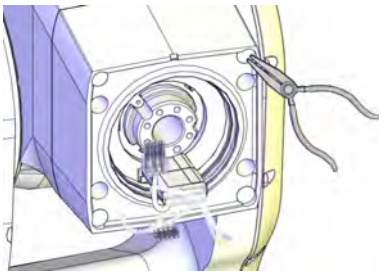 xx1600000262
4	Remove the extender unit screws.	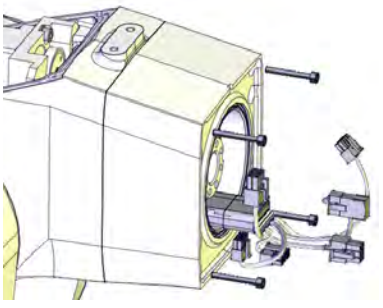 xx1300002372

Continues on next page

© Copyright 2014 - 2017 ABB. All rights reserved.

	Action	Note
5	Remove the housing extender unit. Be careful not to damage the cabling.	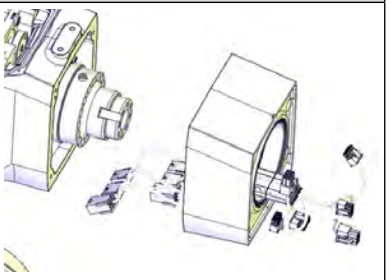 xx1300002374

Removing the axis-4 mechanical stop

	Action	Note
1	**CAUTION** For robots with protection type Clean Room: Always cut the paint with a knife and grind the paint edge when disassembling parts of the robot! See *Replacing parts on the robot on page 138*	
2	Remove the mechanical stop assembly from the housing extender unit by removing the screws.	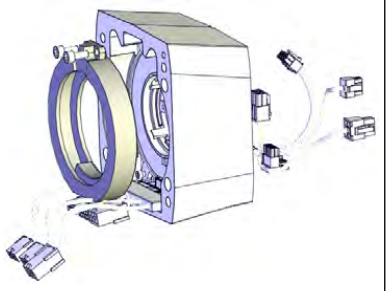 xx1300002415

Refitting the mechanical stop

Use these procedures to refit the mechanical stop.

Checking the housing extender sealings

	Action	Note
1	Clean Room robots: clean the joints that have been opened. See *Replacing parts on the robot on page 138*	

Continues on next page

© Copyright 2014 - 2017 ABB. All rights reserved.

4.4.7 Replacing the axis-4 mechanical stop

Continued

	Action	Note
2	**For robots with protection class IP67 (option 287-10)** **For robots with protection type Foundry Plus (option 287-3)** Check the sealing. Replace if damaged. **CAUTION** Do not fit M2 variseal sealing on Clean Room robots.	M2 variseal sealing: 3HAC044641-007 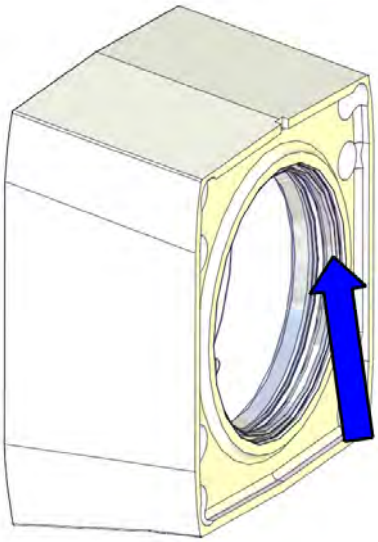 xx1300002418
3	**For robots with protection class IP67 (option 287-10)** **For robots with protection type Foundry Plus (option 287-3)** **For robots with with protection type Clean Room** **For robots with food grade lubrication** Check the radial sealing. Replace if damaged, as described below. In order to replace the radial sealing, both the axis-4 mechanical stop and the axis-4 FPC unit must be removed from the housing extender unit, if not already removed.	Radial sealing with dust lip: 3HAB3701-48 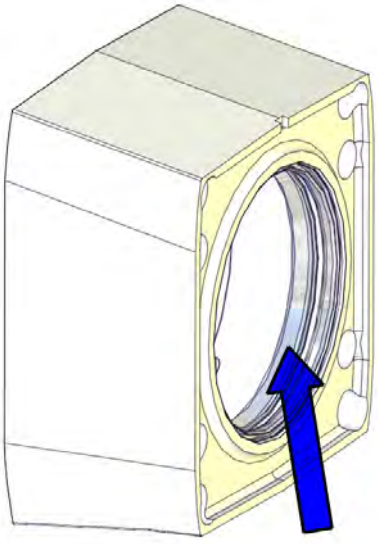 xx1400000438
4	**For robots with protection type Clean Room** Apply a little grease to the sealing when replacing the radial sealing and wipe clean after the replacement.	
5	Fit the radial sealing into the housing extender unit.	

Continues on next page

© Copyright 2014 - 2017 ABB. All rights reserved.

	Action	Note
6	Fit the circular part of the radial sealing assembly tool against the radial sealing.	Axis-4 sealing assembly tool set: 3HAC049699-001
7	Fit the tool plate to the other side of the housing extender unit with the six screws M6X50.	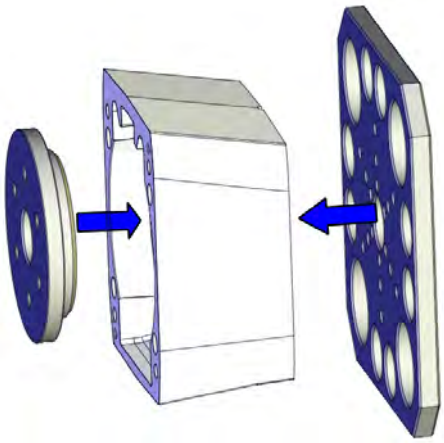 xx1400000436
8	Screw the screws, little by little, to press the sealing into place.	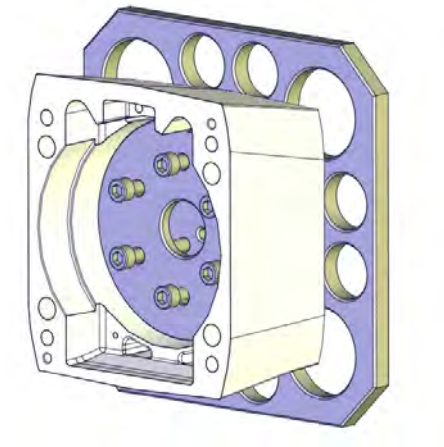 xx1400000437
9	Remove the assembly tool.	
10	Check that the sealing is undamaged and properly fitted.	
11	Refit both the axis-4 mechanical stop and the axis-4 FPC unit to the housing extender unit.	
12	Clean Room robots: seal and paint the joints that have been opened. See *Replacing parts on the robot on page 138* **Note** After all repair work, wipe the robot free from particles with spirit on a lint free cloth.	

Continues on next page

© Copyright 2014 - 2017 ABB. All rights reserved.

4.4.7 Replacing the axis-4 mechanical stop
Continued

Refitting the axis-4 mechanical stop

	Action	Note
1	Clean Room robots: clean the joints that have been opened. See *Replacing parts on the robot on page 138*	
2	Fit the mechanical stop screw to the axis-4 shaft.	Screws: 3HAB3409-231 (M4x8). Tightening torque: 4 Nm. 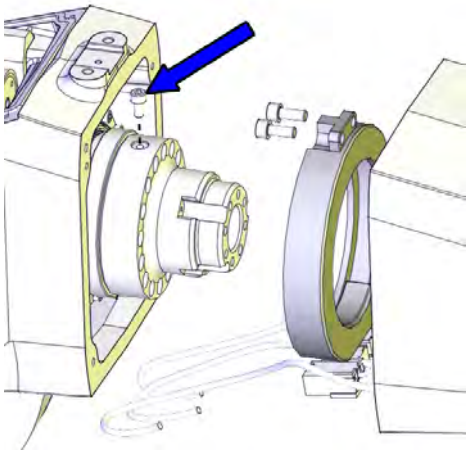 xx1400000393
3	Fit the mechanical stop assembly to the housing extender unit and secure with screws.	Screws: 3HAB3409-216 (M5x12). Tightening torque: 4 Nm. 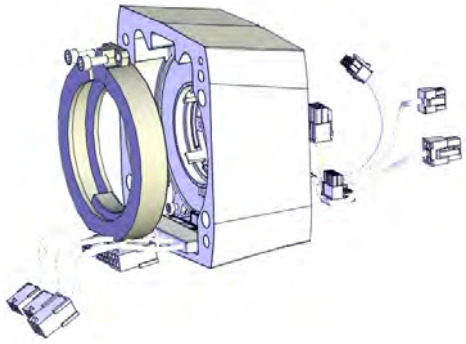 xx1300002415 **Note** Only use specified screws, never replace them with other screws.
4	Clean Room robots: seal and paint the joints that have been opened. See *Replacing parts on the robot on page 138* **Note** After all repair work, wipe the robot free from particles with spirit on a lint free cloth.	

Continues on next page

© Copyright 2014 - 2017 ABB. All rights reserved.

Refitting the housing extender unit

	Action	Note
1	Clean Room robots: clean the joints that have been opened. See *Replacing parts on the robot on page 138*	
2	**For robots with protection class IP67 (option 287-10)** **For robots with protection type Foundry Plus (option 287-3)** Remove residual locking liquid and other pollutants with cleaning agent Loctite 7063. Apply flange sealing Loctite 574 on the mounting surfaces of the housing extender unit. **Note** For Clean Room robots, wipe clean the overflowing Loctite 574 if there is any.	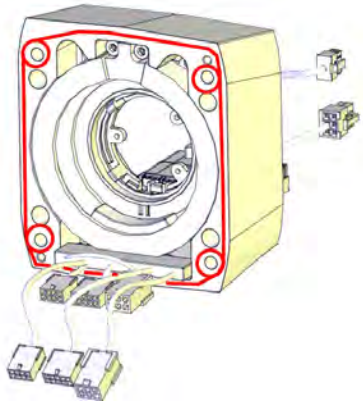 xx1300002613
3	**For robots with protection type Clean Room** **For robots with protection type Foundry Plus** Make sure the four cavities are fully filled with glue. If not, fill glue again before the refitting.	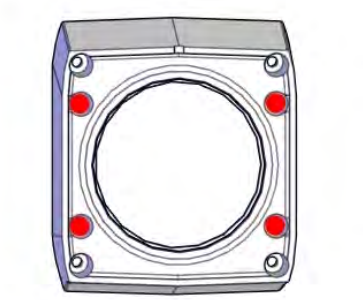 xx1600000216
4	Refit the housing extender unit to the housing while putting the FPC cables into the housing and the air hoses through the housing extender unit. Be careful not to damage the cabling. **CAUTION** Make sure that the axis-4 FPC unit is in its zero position when refitting the housing extender unit. **Note** Mate the unit to the two locating pins attached to the housing.	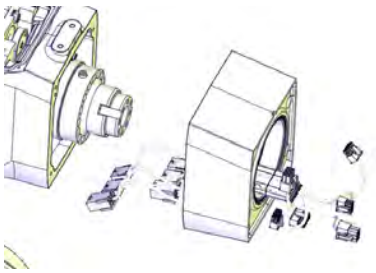 xx1300002374

Continues on next page

© Copyright 2014 - 2017 ABB. All rights reserved.

4.4.7 Replacing the axis-4 mechanical stop

Continued

	Action	Note
5	Secure with screws and washers, using locking liquid Loctite 243.	Screws: M4x30. Tightening torque: 2.7 Nm. 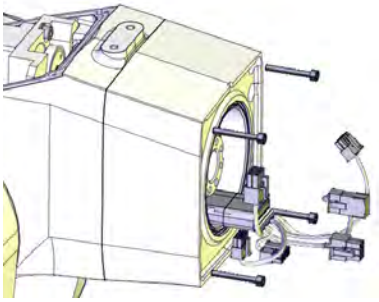 xx1300002372
6	**For robots with protection type Foundry Plus (option 287-3)** **For robots with protection type Clean Room** **For robots with food grade lubrication** Press in screw sealing plugs to cover the screws.	Screw sealing plug: 3HAC053685-001 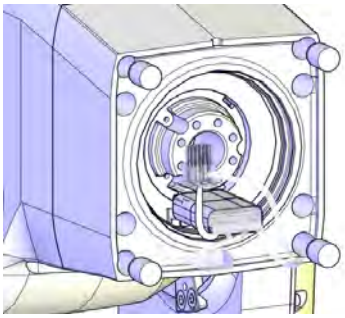 xx1600000263
7	Fit and secure the axis-4 FPC unit screws.	Tightening torque: 0.3 Nm. 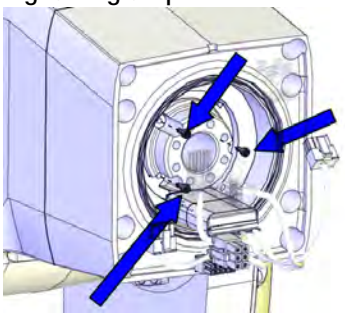 xx1300002373
8	Clean Room robots: seal and paint the joints that have been opened. See *Replacing parts on the robot on page 138* **Note** After all repair work, wipe the robot free from particles with spirit on a lint free cloth.	

Connecting the axis-4 FPC connectors

	Action	Note
1	Clean Room robots: clean the joints that have been opened. See *Replacing parts on the robot on page 138*	

Continues on next page

© Copyright 2014 - 2017 ABB. All rights reserved.

	Action	Note
2	Reconnect the FPC connectors. **Tip** See the number markings on the connectors for help to find the corresponding connector.	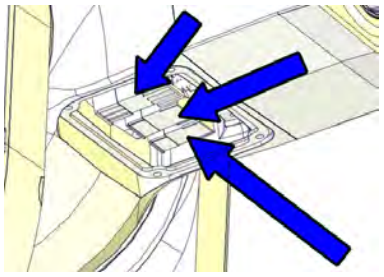 xx1300002399
3	Reconnect the FPC connectors and push them into place inside the housing. **Tip** See the number markings on the connectors for help to find the corresponding connector.	Cable layout in IRB 1200-7/0.7 : 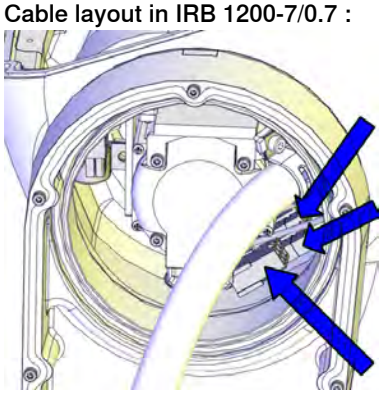 xx1300002412 Cable layout in IRB 1200-5/0.9 : 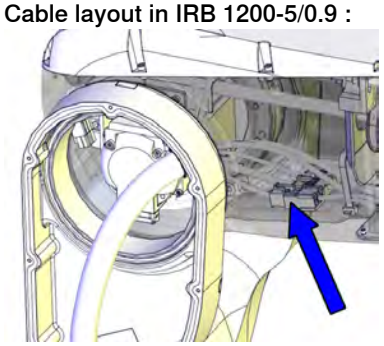 xx1400001471
4	Remove residual locking liquid and other pollutants with cleaning agent Loctite 7063.	

Continues on next page

© Copyright 2014 - 2017 ABB. All rights reserved.

4.4.7 Replacing the axis-4 mechanical stop

Continued

	Action	Note
5	**For robots with protection class IP67 (option 287-10)** **For robots with protection type Foundry Plus (option 287-3)** Apply flange sealing Sikaflex 521FC on the mounting surfaces of the small cover on the housing.	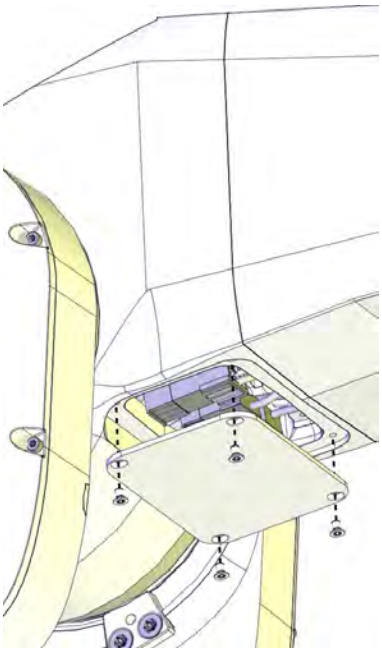 xx1300002398 Housing small cover: 3HAC059684-001 : 3HAC056142-001 (used with protection type Clean Room) Housing small cover, Clean Room Housing small cover, food grade lubrication Screws: 3HAC14286-4 (M3X5). Tightening torque: 1 Nm.
6	Refit the small cover to the housing. Replace if damaged.	
7	**For robots with protection type Clean Room** Apply a string of the sealant Sikaflex 521FC to the joint of the small cover on the housing. Smooth out the sealant string using a finger tip. Use washing-up on finger tips to get a smooth joint. If necessary, add extra sealant to get a full cover joint.	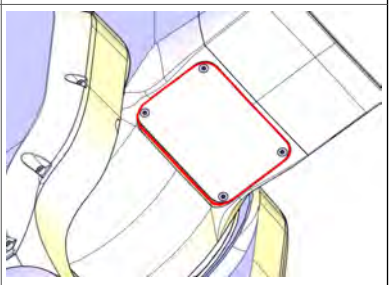 xx1600000214

Continues on next page

© Copyright 2014 - 2017 ABB. All rights reserved.

	Action	Note
8	Refit the plate.	Tightening torque: 1.5 Nm. 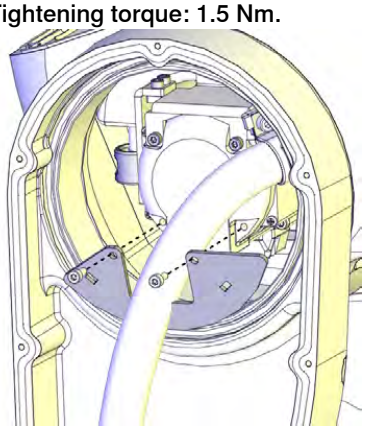 xx1300002413
9	Check the PTFE film on the cable housing. Replace if damaged.	PTFE film on lower arm cable housing: 3HAC044710-001 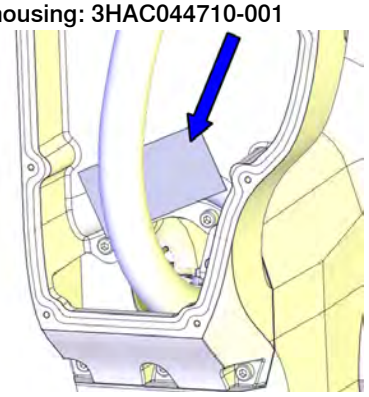 xx1400000740

Continues on next page

© Copyright 2014 - 2017 ABB. All rights reserved.

4.4.7 Replacing the axis-4 mechanical stop

Continued

	Action	Note
10	**For robots with protection class IP67 (option 287-10)** **For robots with protection type Foundry Plus (option 287-3)** **For robots with with protection type Clean Room** **For robots with food grade lubrication** Check the gasket of the cable housing cover. Replace if damaged.	Gasket on cable housing cover: 3HAC056724-001 PTFE film on cable housing cover: 3HAC044660-001 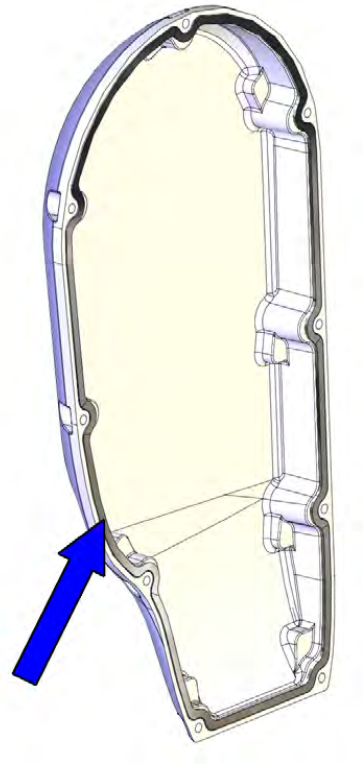 xx1400000048
11	Check the PTFE film on the cable housing cover. Replace if damaged.	
12	Apply grease to the inner surface of the cable housing cover and the PTFE film surface.	

Continues on next page

© Copyright 2014 - 2017 ABB. All rights reserved.

	Action	Note
13	Refit the cable housing cover.	Screws: 3HAB3409-207 (M3x8). Tightening torque: 1.5 Nm 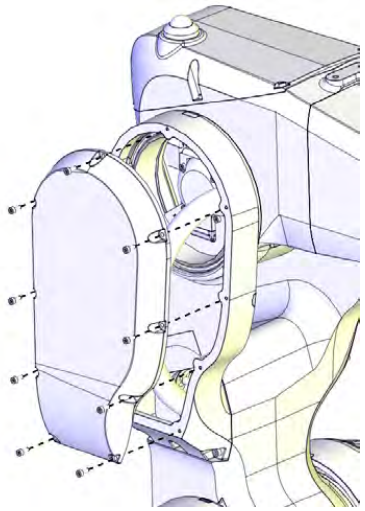 xx1300002400 **Note** Only use specified screws, never replace them with other screws.
14	Clean Room robots: seal and paint the joints that have been opened. See *Replacing parts on the robot on page 138* **Note** After all repair work, wipe the robot free from particles with spirit on a lint free cloth.	

Refitting the wrist

	Action	Note
1	Clean Room robots: clean the joints that have been opened. See *Replacing parts on the robot on page 138*	

Continues on next page

© Copyright 2014 - 2017 ABB. All rights reserved.

4.4.7 Replacing the axis-4 mechanical stop

Continued

	Action	Note
2	Put the connectors and air hoses into the wrist carefully while at the same time refitting the wrist to the housing extender unit. Be careful not to damage the FPC cabling and the connectors. **CAUTION** Pay special attention to the plastic block on the FPC unit. It is easily pulled off, make sure it stays fitted to the FPC unit. 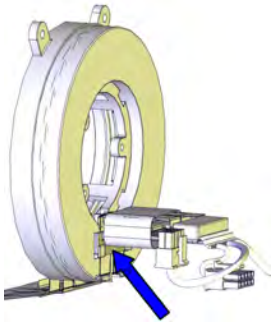 xx1300002611	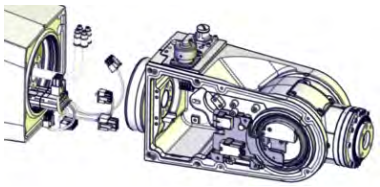 xx1300002359
3	Refit the washer while at the same time putting the cables through its center. Replace washer, if damaged.	Washer: 3HAC044869-001 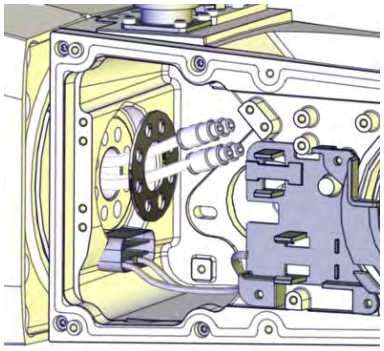 xx1400000001

Continues on next page

© Copyright 2014 - 2017 ABB. All rights reserved.

	Action	Note
4	Refit the screw M6x35 (1 pc). Do not tighten yet.	Screw: 3HAB3409-238 (M6x35 (1 pc)). 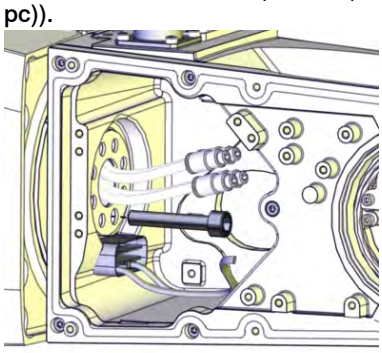 xx1400000002 **Note** Only use specified screws, never replace them with other screws.
5	Refit the rest of the screws (M5x35 (7 pcs)).	Screw: 3HAB3409-237 (M5x35 (7 pcs)). 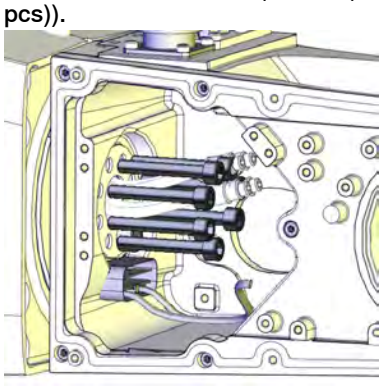 xx1400000003 **Note** Only use specified screws, never replace them with other screws.
6	Tighten all screws.	Tightening torque: 8 Nm.
7	Put the cables through the plate hole and refit the plate.	Tightening torque: 0.3 Nm. 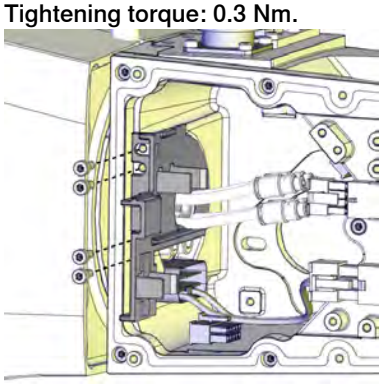 xx1300002356

Continues on next page

© Copyright 2014 - 2017 ABB. All rights reserved.

4.4.7 Replacing the axis-4 mechanical stop

Continued

	Action	Note
8	Reconnect the air hoses. **CAUTION** Make sure to connect the air hoses correctly, according to the marking on hoses and connectors.	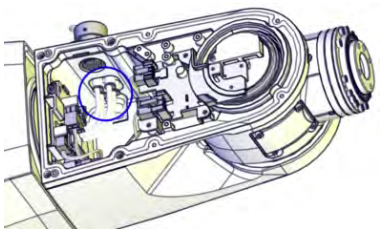 xx1300002355
9	Reconnect the connectors. • R3.Eth • R3.CPCS	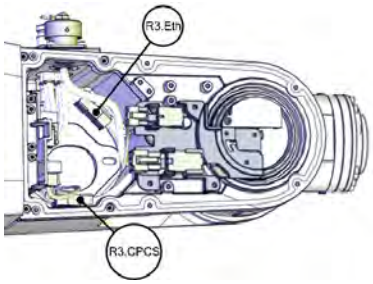 xx1300002353
10	Clean Room robots: seal and paint the joints that have been opened. See *Replacing parts on the robot on page 138* **Note** After all repair work, wipe the robot free from particles with spirit on a lint free cloth.	

Preparations before securing the axis-5 motor

	Action	Note
1	Check that: • all assembly surfaces are clean and without damages • the motor is clean and undamaged.	
2	Place the motor at its mounting position and fasten the attachment screws and washers just enough to still be able to move the motor.	Screws: 3HAB3409-212 (M4x16). 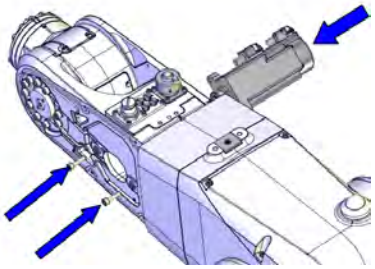 xx1300002463 **Note** Only use specified screws, never replace them with other screws.

Continues on next page

© Copyright 2014 - 2017 ABB. All rights reserved.

Securing the axis-5 motor and timing belt

	Action	Note
1	Clean Room robots: clean the joints that have been opened. See *Replacing parts on the robot on page 138*	
2	Refit the timing belt on the pulley.	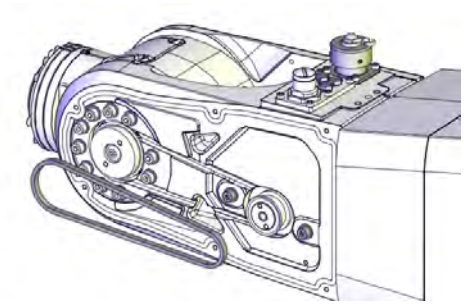 xx1300002351
3	Move the motor to a position where a good timing belt tension is reached (F = 26 N).	**Note** Do not strech the timing belt too much!
4	Secure the motor with its attachment screws.	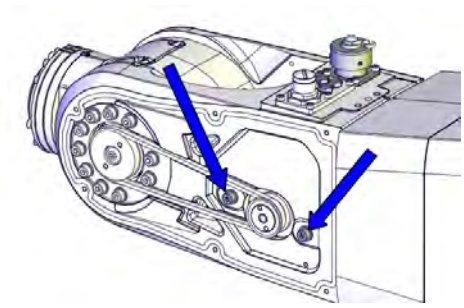 xx1300002350 Tightening torque: 3.5 Nm.
5	Clean Room robots: seal and paint the joints that have been opened. See *Replacing parts on the robot on page 138* **Note** After all repair work, wipe the robot free from particles with spirit on a lint free cloth.	

Refitting the connector plate

	Action	Note
1	Clean Room robots: clean the joints that have been opened. See *Replacing parts on the robot on page 138*	

Continues on next page

© Copyright 2014 - 2017 ABB. All rights reserved.

4.4.7 Replacing the axis-4 mechanical stop
Continued

	Action	Note
2	Refit the connector plate and secure with the M3 screws.	Tightening torque: 0.3 Nm. 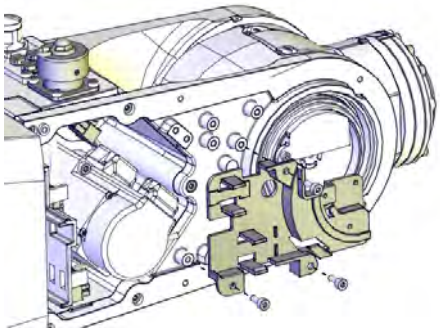 xx1400001401
3	Secure the three M2.5 screws.	Tightening torque: 0.3 Nm. 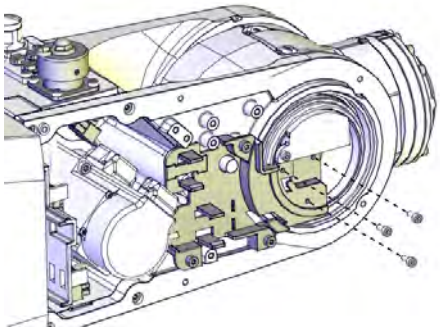 xx1400001402
4	Clean Room robots: seal and paint the joints that have been opened. See *Replacing parts on the robot on page 138* **Note** After all repair work, wipe the robot free from particles with spirit on a lint free cloth.	

Connecting the axis-5 motor FPC connectors

	Action	Note
1	Connect the axis-5 FPC connectors and snap them to their holders.	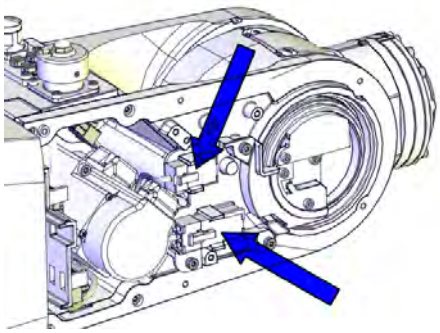 xx1300002390

Continues on next page

© Copyright 2014 - 2017 ABB. All rights reserved.

Connecting the axis-5 motor connectors

	Action	Note
1	Reconnect the motor cables. • R3.MP5 • R3.ME5	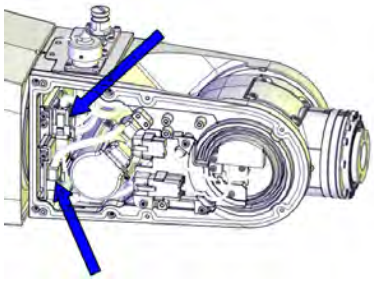 xx1300002360

Refitting the wrist covers

	Action	Note
1	Clean Room robots: clean the joints that have been opened. See *Replacing parts on the robot on page 138*	
2	**For robots with protection class IP67 (option 287-10)** **For robots with protection type Foundry Plus (option 287-3)** **For robots with with protection type Clean Room** **For robots with food grade lubrication** Check the tubular cover gasket. Replace if damaged.	Gasket for tubular cover: 3HAC058822-001 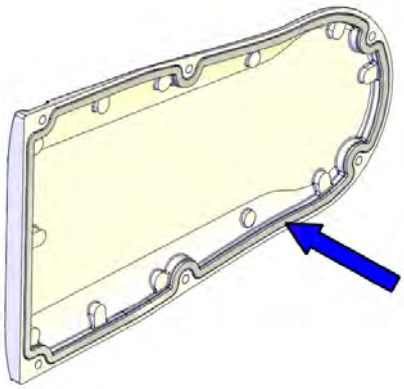 xx1400000034
3	**For robots with protection class IP67 (option 287-10)** **For robots with protection type Foundry Plus (option 287-3)** **For robots with with protection type Clean Room** **For robots with food grade lubrication** Check the tubular cable housing cover gasket. Replace if damaged.	Gasket for tubular cable housing cover: 3HAC056707-001 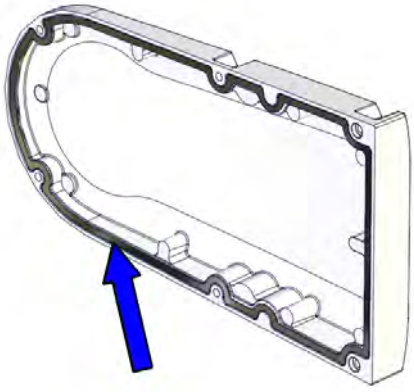 xx1400000345

Continues on next page

© Copyright 2014 - 2017 ABB. All rights reserved.

4.4.7 Replacing the axis-4 mechanical stop

Continued

	Action	Note
4	Refit the both covers to the wrist. **For robots with protection class IP67 (option 287-10)** **For robots with protection type Foundry Plus (option 287-3)** Apply locking liquid Loctite 243 to the two front screws on the left hand side cover, encircled in the figure. Remember to refit the extra two screws and washers to the tubular cover. **For robots with protection type Clean Room** Remember to refit the extra two screws and washers to the tubular cover.	Screws: 3HAB3409-207 (M3x8). Tightening torque: 1.5 Nm. For robots with protection class IP67 (option 287-10) For robots with protection type Foundry Plus (option 287-3) 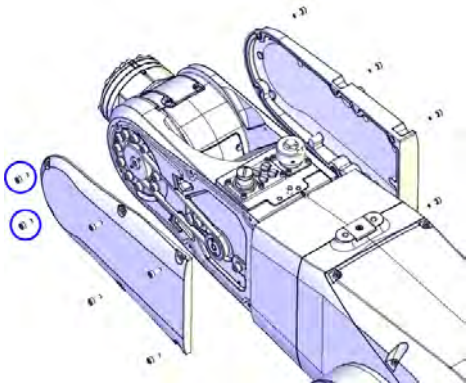 xx1300002349 For robots with protection type Clean Room 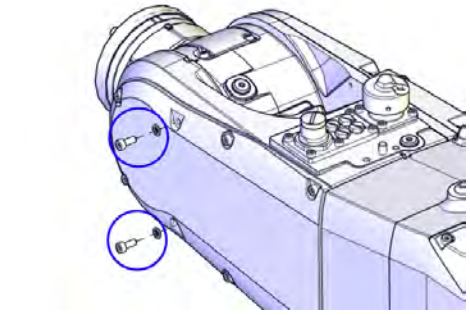 xx1600001153 **Note** Only use specified screws, never replace them with other screws.
5	Clean Room robots: seal and paint the joints that have been opened. See *Replacing parts on the robot on page 138* **Note** After all repair work, wipe the robot free from particles with spirit on a lint free cloth.	

Continues on next page

© Copyright 2014 - 2017 ABB. All rights reserved.

Concluding procedure

	Action	Note
1	For robots with protection type Clean Room: Clean and paint the joints that have been opened. See *Replacing parts on the robot on page 138*  **Note** After all repair work, wipe the Clean Room robot free from particles with spirit on a lint free cloth.	
2	Recalibrate the robot.	Calibration is detailed in section *Calibration on page 733*.
3	 **DANGER** Make sure all safety requirements are met when performing the first test run. These are further detailed in the section *DANGER - First test run may cause injury or damage! on page 48*.	

© Copyright 2014 - 2017 ABB. All rights reserved.

4.5 Swing and base

4.5.1 Replacing the base spare parts (base, axis-1 radial sealing, protection sleeve)

Location of the base spare parts

The base parts that are considered spare parts are located as shown in the figure.

Base	Base, SafeMove 2-supported	Radial sealing with dust lip	Cable protection sleeve inside base
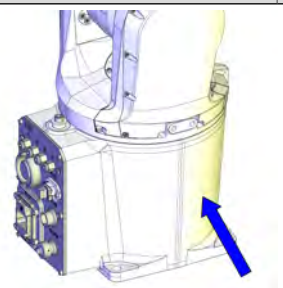 xx1400000396		 xx1400000269	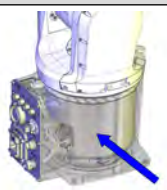 xx1400000395
3HAC059553-001 Includes base machining, axis-1 gear unit and axis-1 AC motor with encoder interface. Incompatible with swing 3HAC049632-001. See *Spare part versions for the base on IP40/IP67 robots on page 793*.	3HAC061270-001 Used for IRB 1200 Type B. See *Type B of IRB 1200 on page 792*. Includes base machining, axis-1 gear unit and axis-1 AC motor with resolver interface.	3HAB3701-47 Not used with protection class IP40. Replace if damaged.	3HAC044690-001
3HAC059699-001 Used with protection type Clean Room.	3HAC061271-001 Used for IRB 1200 Type B. See *Type B of IRB 1200 on page 792*. Used with protection type Clean Room.		
3HAC057906-001 Used for robots with food grade lubrication.	3HAC061272-001 Used for IRB 1200 Type B. See *Type B of IRB 1200 on page 792*. Used for robots with food grade lubrication.		

Continues on next page

© Copyright 2014 - 2017 ABB. All rights reserved.

M2 variseal sealing	Sealing ring (IP40) / Sealing ring, gasket and V-ring (IP67)
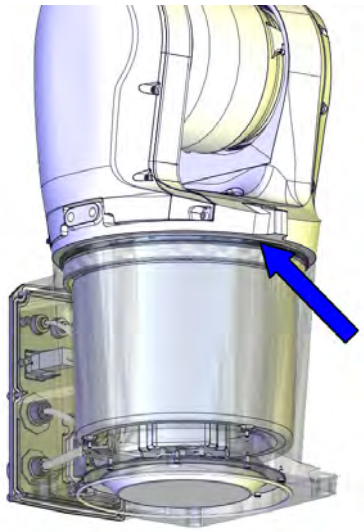 xx1400000471	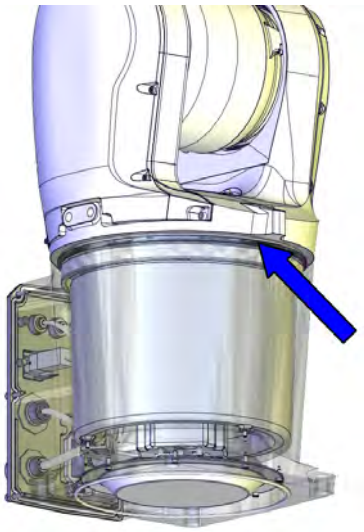 xx1400000471
3HAC044641-002 Used with protection class IP67. Used only on base 3HAC049628-001. See *Spare part versions for the base on IP40/IP67 robots on page 793*. Replace if damaged.	Sealing ring: 3HAC058568-001 (IP40) Sealing ring, gasket and V-ring: 3HAC058001-001 (IP67) Used with protection class IP67. Replace if damaged.

Required spare parts

Note

The spare part numbers that are listed in the table can be out of date. See the latest revision of *Product manual, spare parts - IRB 1200* on ABB Library.

Spare part	Article number	Note
Base	3HAC059553-001	Includes base machining, axis-1 gear unit and axis-1 AC motor with encoder interface. Incompatible with swing 3HAC049632-001. See *Spare part versions for the base on IP40/IP67 robots on page 793*.
Base, Clean Room	3HAC059699-001	Used with protection type Clean Room. Includes base machining, axis-1 gear unit and axis-1 AC motor with encoder interface.
Base, food grade lubrication	3HAC057906-001	Used for robots with food grade lubrication. Includes base machining, axis-1 gear unit and axis-1 AC motor with encoder interface.

Continues on next page

© Copyright 2014 - 2017 ABB. All rights reserved.

4.5.1 Replacing the base spare parts (base, axis-1 radial sealing, protection sleeve)
Continued

Spare part	Article number	Note
Base, SafeMove 2-supported	3HAC061270-001	Used for IRB 1200 Type B. See *Type B of IRB 1200 on page 792*. Includes base machining, axis-1 gear unit and axis-1 AC motor with resolver interface.
Base, Clean Room and SafeMove 2-supported	3HAC061271-001	Used for IRB 1200 Type B. See *Type B of IRB 1200 on page 792*. Used with protection type Clean Room. Includes base machining, axis-1 gear unit and axis-1 AC motor with resolver interface.
Base, food grade lubrication and SafeMove 2-supported	3HAC061272-001	Used for IRB 1200 Type B. See *Type B of IRB 1200 on page 792*. Used for robots with food grade lubrication. Includes base machining, axis-1 gear unit and axis-1 AC motor with resolver interface.
Radial sealing with dust lip	3HAB3701-47	Not used with protection class IP40. Replace if damaged.
Axis-1 sealing ring gasket	3HAC045685-001	Used with protection class IP67. Only on axis-1 sealing ring version 3HAC044676-001. See *Spare part versions for the axis-1 sealing ring on IP40/IP67 robots on page 797*. Replace if damaged.
Axis-1 sealing ring gasket	3HAC058349-001	Not used with protection class IP40. Only on axis-1 sealing ring version 3HAC058568-001. See *Spare part versions for the axis-1 sealing ring on IP40/IP67 robots on page 797*. Replace if damaged.
V-ring	3HAB3732-34	Used with protection class IP67. Used with protection type Foundry Plus. Only on swing version 3HAC058000-001 and 3HAC059554-001. See *Spare part versions for the swing on IP40/IP67 robots on page 795*. Replace if damaged.
M2 variseal sealing	3HAC044641-002	Used with protection class IP67. Used only on base 3HAC049628-001. See *Spare part versions for the base on IP40/IP67 robots on page 793*. Replace if damaged.

Continues on next page

© Copyright 2014 - 2017 ABB. All rights reserved.

Spare part	Article number	Note
Sealing ring	3HAC058568-001	Used with protection class IP67. Used with protection type Foundry Plus. Used only on base 3HAC059553-001. See *Spare part versions for the base on IP40/IP67 robots on page 793*. Replace if damaged.
Sealing ring, gasket and V-ring	3HAC058001-001	Used with protection class IP67. Replace if damaged.
Protection plug	3HAC051199-001	Protection plug for the calibration hole in the swing (the hole is used during calibration of axis 1 with the manual calibration method). Replace if damaged.
Cable protection sleeve inside base	3HAC044690-001	
O-ring	3HAB3772-86	Not used with protection class IP40. Replace if damaged.
Gasket for rear base cover	3HAC058566-001	Not used with protection class IP40. Replace if damaged.
M2 variseal sealing	3HAC044641-004	Used with protection class IP67. Used with protection type Foundry Plus. Replace if damaged.
Cable harness material set	3HAC049663-001	Includes brackets, sheets, distance screws, plastics, cable clamp, seal bolts and air protection in tubular.
Gasket on cable housing cover	3HAC056724-001	Not used with protection class IP40. Replace if damaged.
Gasket for tubular cable housing cover	3HAC056707-001	Not used with protection class IP40. Replace if damaged.

Required tools and equipment

Equipment, etc.	Article number	Note
Roundsling, 2 m	-	Length: 2 m. Lifting capacity: 100 kg.
Axis-1 sealing assembly tool set	3HAC049692-001	Used to refit the axis-1 radial sealing.
Guide pin for axis-1 gear unit	3HAC049703-001	Always use three guide pins together!
24 VDC power supply	-	Used to release the motor brakes.
Calibration toolkit, manual calibration	3HAC051256-001	Includes calibration tools, pins and attachment screws for manual calibration method. i

Continues on next page

© Copyright 2014 - 2017 ABB. All rights reserved.

4.5.1 Replacing the base spare parts (base, axis-1 radial sealing, protection sleeve)
Continued

Equipment, etc.	Article number	Note
Standard toolkit	-	Content is defined in section *Standard toolkit on page 808*.

i The robot is calibrated by either manual calibration or Axis Calibration at factory. Always use the same calibration method as used at the factory.
Information about valid calibration method is found on the calibration label or in the calibration menu on the FlexPendant.
If no data is found related to standard calibration, manual calibration is used as default.

Required consumables

Equipment	Art. no.	Note
Cable straps	-	
Grease	3HAB3537-1	Used for lubrication of cable contact areas.
Grease	3HAC029132-001	Used for lubrication of cable contact areas for robots with food grade lubrication.
Grease	3HAC058065-001	Used for lubrication of radial sealing surface between base and swing. For robots with protection class IP67 (option 287-10) For robots with protection type Foundry Plus (option 287-3).
Sealant	3HAC026759-001	Sikaflex 521FC For robots with protection type Clean Room. For robots with protection class IP67 (option 287-10) For robots with protection type Foundry Plus (option 287-3).

Deciding calibration routine

Decide which calibration routine to be used, based on the information in the table. Depending on which routine is chosen, action might be required prior to beginning the repair work of the robot, see the table.

	Action	Note
1	Decide which calibration routine to use for calibrating the robot. • Reference calibration. External cable packages (DressPack) and tools can stay fitted on the robot. • Fine calibration. All external cable packages (DressPack) and tools must be removed from the robot.	**Note** Calibrating axis 6 always requires tools to be removed from the mounting flange (also for reference calibration) since the mounting flange is used for installation of the calibration tool.

Continues on next page

© Copyright 2014 - 2017 ABB. All rights reserved.

	Action	Note
	If the robot is to be calibrated with reference calibration: Find previous reference values for the axis or create new reference values. These values are to be used after the repair procedure is completed, for calibration of the robot. If no previous reference values exist, and no new reference values can be created, then reference calibration is not possible.	Follow the instructions given in the reference calibration routine on the FlexPendant to create reference values. Creating new values requires possibility to move the robot. Read more about reference calibration for Axis Calibration in *Reference calibration routine on page 743*.
	If the robot is to be calibrated with fine calibration: Remove all external cable packages (DressPack) and tools from the robot.	

Removing the cabling

Before the spare parts of the base can be removed, the cable harness must be removed from upper arm and down to the base. Use these procedures to remove the cabling in order to access the base spare parts.

Preparations before removing the cabling

	Action	Note
1	Decide which calibration routine to use, and take actions accordingly prior to beginning the repair procedure.	
2	Jog all axes to zero position.	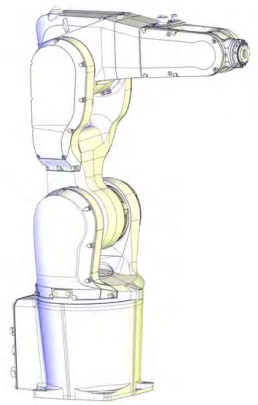 xx1300002581
3	**DANGER** Turn off all: • electric power supply • hydraulic pressure supply • air pressure supply to the robot, before entering the robot working area.	

Continues on next page

© Copyright 2014 - 2017 ABB. All rights reserved.

4.5.1 Replacing the base spare parts (base, axis-1 radial sealing, protection sleeve)
Continued

	Action	Note
4	**CAUTION** For robots with protection type Clean Room: Always cut the paint with a knife and grind the paint edge when disassembling parts of the robot! See *Replacing parts on the robot on page 138*	
5	Remove the wrist cover.	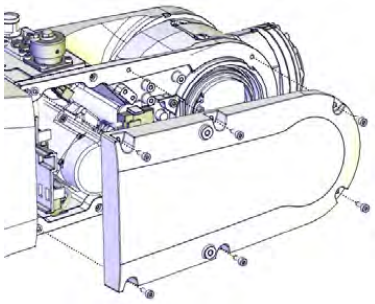 xx1300002389

Disconnecting the axis-5 motor connectors

	Action	Note
1	**DANGER** Make sure that all supplies for electrical power, hydraulic pressure, and air pressure are turned off.	
2	Snap loose the motor connectors from their holders and then disconnect them. • R3.MP5 • R3.ME5 **Tip** Take photos of the connector and cable position before disconnecting them, to have as a reference when reconnecting.	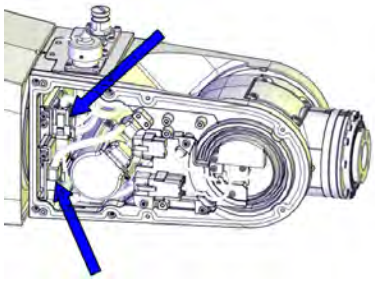 xx1300002360

Disconnecting the axis-5 FPC connectors

	Action	Note
1	**DANGER** Make sure that all supplies for electrical power, hydraulic pressure, and air pressure are turned off.	

Continues on next page

© Copyright 2014 - 2017 ABB. All rights reserved.

	Action	Note
2	Snap loose and disconnect the axis-5 FPC connectors.	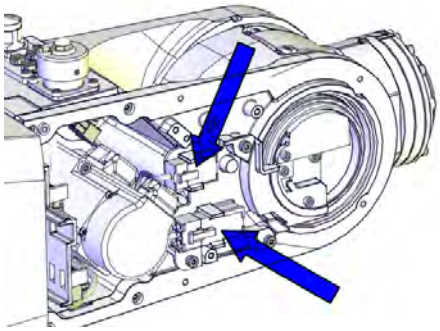 xx1300002390

Disconnecting the air hoses

	Action	Note
1	**DANGER** Make sure that all supplies for electrical power, hydraulic pressure, and air pressure are turned off.	
2	Disconnect the air hoses.	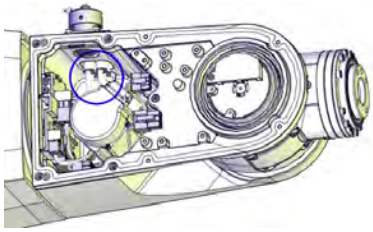 xx1400000738

Disconnecting the axis-4 FPC connectors

	Action	Note
1	**DANGER** Make sure that all supplies for electrical power, hydraulic pressure, and air pressure are turned off.	
2	**CAUTION** For robots with protection type Clean Room: Always cut the paint with a knife and grind the paint edge when disassembling parts of the robot! See *Replacing parts on the robot on page 138*	

Continues on next page

© Copyright 2014 - 2017 ABB. All rights reserved.

4.5.1 Replacing the base spare parts (base, axis-1 radial sealing, protection sleeve)

Continued

	Action	Note
3	Remove the cable housing cover.	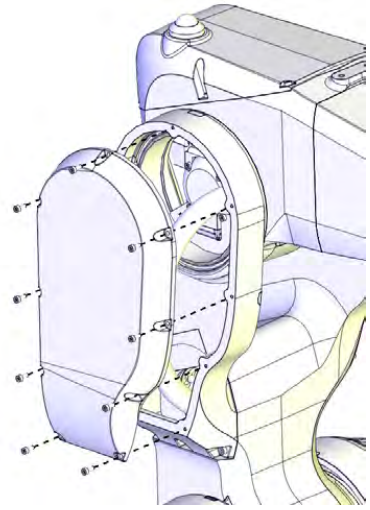 xx1300002400
4	Remove the plate.	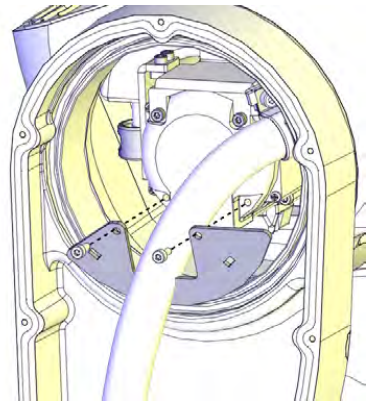 xx1300002413

Continues on next page

© Copyright 2014 - 2017 ABB. All rights reserved.

	Action	Note
5	Pull out the FPC connectors from the housing and disconnect them.	Cable layout in IRB 1200-7/0.7 : 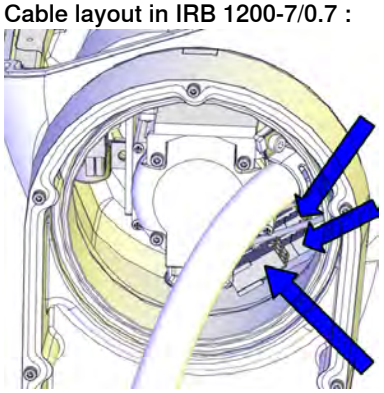 xx1300002412 Cable layout in IRB 1200-5/0.9 : 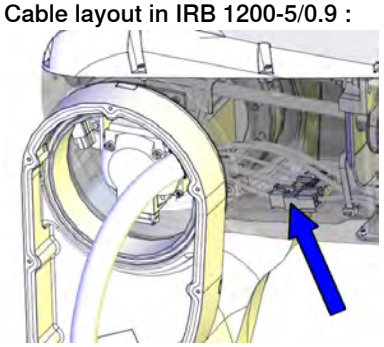 xx1400001471
6	Remove the small cover of the housing.	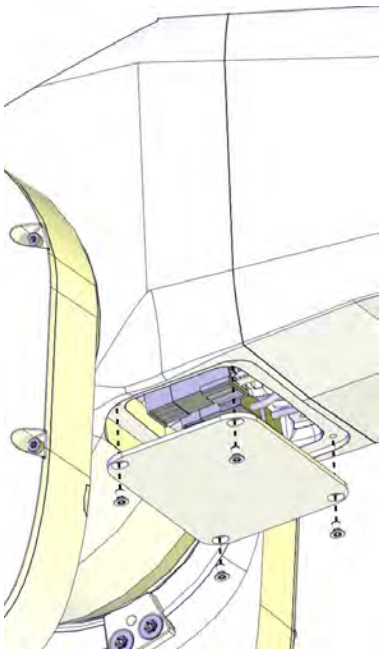 xx1300002398

Continues on next page

© Copyright 2014 - 2017 ABB. All rights reserved.

4.5.1 Replacing the base spare parts (base, axis-1 radial sealing, protection sleeve)

Continued

	Action	Note
7	Disconnect the remaining FPC connectors.	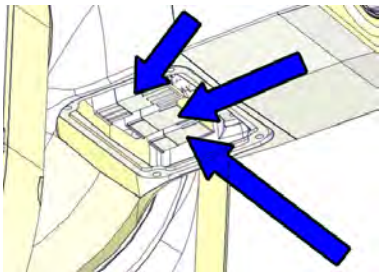 xx1300002399

Disconnecting the axis-4 motor connectors

	Action	Note
1	**DANGER** Make sure that all supplies for electrical power, hydraulic pressure, and air pressure are turned off.	
2	**CAUTION** For robots with protection type Clean Room: Always cut the paint with a knife and grind the paint edge when disassembling parts of the robot! See *Replacing parts on the robot on page 138*	
3	Remove the cover from the upper arm housing. **CAUTION** **For robots with safety lamp (option)** Be aware of the signal lamp cables that are attached inside the housing! Disconnect the lamp cable connectors R3.H1 and R3.H2 and then lift away the cover completely.	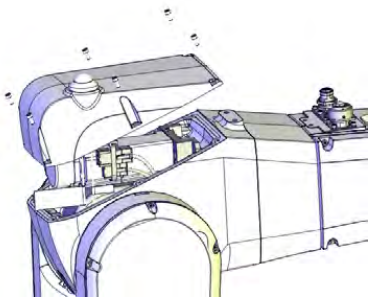 xx1300000456
4	Cut the strap that holds the connectors.	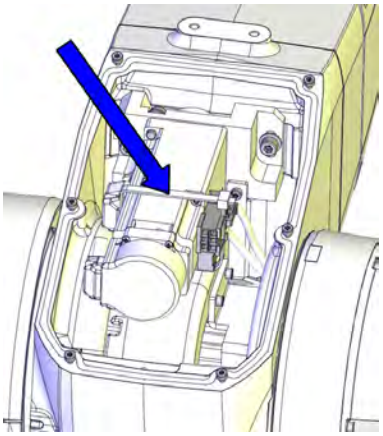 xx1300002494

Continues on next page

© Copyright 2014 - 2017 ABB. All rights reserved.

	Action	Note
5	Disconnect the motor connectors. **Tip** Take photos of the connector and cable position before disconnecting them, to have as a reference when reconnecting.	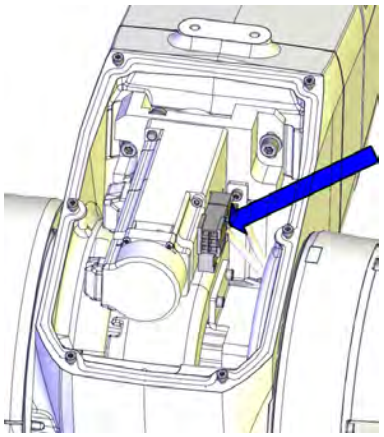 xx1300002495

Disconnecting the axis-3 motor connectors

	Action	Note
1	**DANGER** Make sure that all supplies for electrical power, hydraulic pressure, and air pressure are turned off.	
2	Pull out the axis-3 motor connectors from the housing and disconnect them.	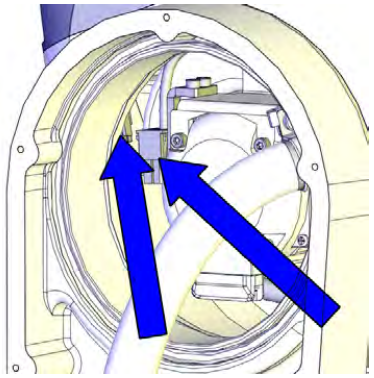 xx1300002420

Removing the cable package in the housing

	Action	Note
1	**DANGER** Make sure that all supplies for electrical power, hydraulic pressure, and air pressure are turned off.	

Continues on next page

© Copyright 2014 - 2017 ABB. All rights reserved.

4.5.1 Replacing the base spare parts (base, axis-1 radial sealing, protection sleeve)

Continued

	Action	Note
2	Remove the screw that fastens the air hose holder.	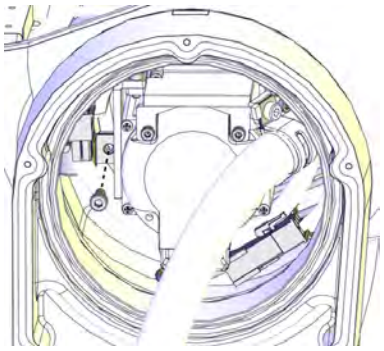 xx1300002422
3	Remove the screws that fasten the fix sheet to the inner plastic guide.	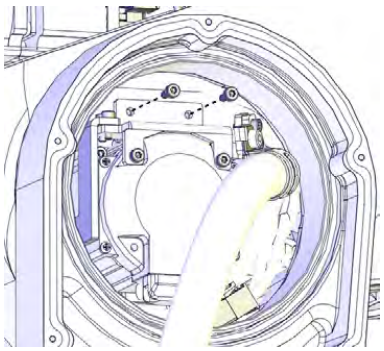 xx1300002421
4	Remove the screws that fasten the fix sheet to the motor.	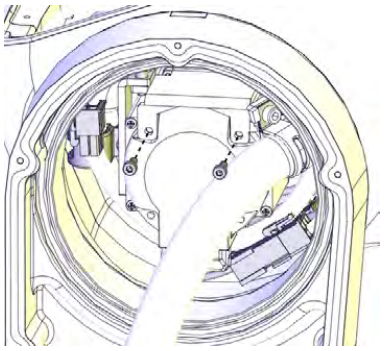 xx1300002423
5	Pull out the fix sheet a bit, to access the screws that fasten the cable bracket to the sheet. Loosen the bracket from the sheet by removing the two screws. **CAUTION** Do not loosen the cable clamp screw! There is a risk of rearrangement of the cable layout which would result in shortened lifetime of the cable harness.	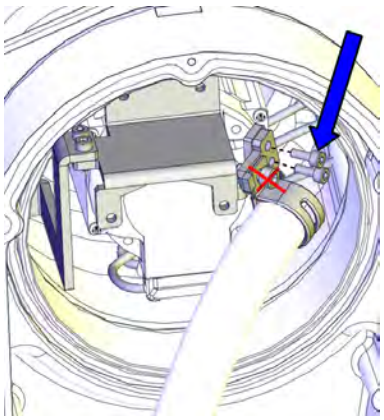 xx1300002424

Continues on next page

© Copyright 2014 - 2017 ABB. All rights reserved.

	Action	Note
6	**Valid for IRB 1200-5/0.9** Cut the cable straps at the bottom of the housing.	

Disconnecting the cabling in the lower arm

	Action	Note
1	**DANGER** Make sure that all supplies for electrical power, hydraulic pressure, and air pressure are turned off.	
2	**ELECTROSTATIC DISCHARGE (ESD)** The unit is sensitive to ESD. Before handling the unit please read the safety information in the section *WARNING - The unit is sensitive to ESD! on page 50*	
3	**CAUTION** For robots with protection type Clean Room: Always cut the paint with a knife and grind the paint edge when disassembling parts of the robot! See *Replacing parts on the robot on page 138*	
4	Remove the EIB/SMB cover attachment screws on the lower arm and carefully open the cover. **CAUTION** Be aware of the cabling that is attached to the cover! The cover can not be removed completely until the connectors and lugs are disconnected, as shown in following step.	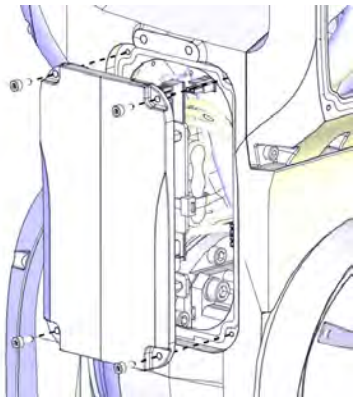 xx1300002427

Continues on next page

© Copyright 2014 - 2017 ABB. All rights reserved.

4.5.1 Replacing the base spare parts (base, axis-1 radial sealing, protection sleeve)
Continued

	Action	Note
5	**Valid for IRB 1200 (no type specified) and IRB 1200 Type A** Disconnect the connectors on the EIB unit. • R1.ME1-3 • R1.ME4-6 • R2.EIB Remove the EIB/SMB cover completely from the lower arm.	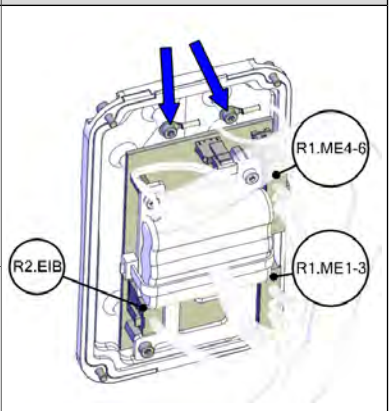 xx1300002428
6	**Valid for IRB 1200 (no type specified) and IRB 1200 Type A** Disconnect the lugs on the EIB/SMB cover.	
7	**Valid for IRB 1200 Type B** Loose the connector screws.	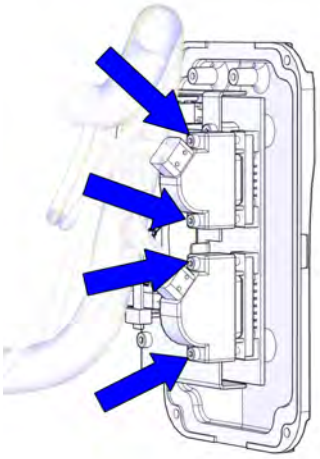 xx1700000004
8	**Valid for IRB 1200 Type B** Disconnect the connectors on the SMB unit. • R1.ME1,2,4,5 • R1.ME3,6 • R2.SMB Remove the EIB/SMB cover completely from the lower arm.	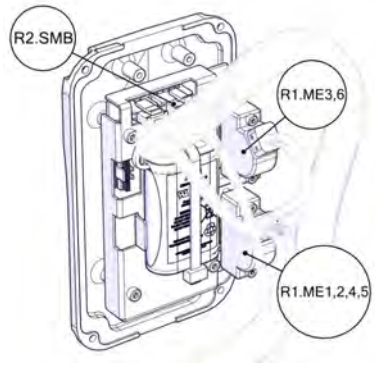 xx1700000005

Removing the cable package in the lower arm

	Action	Note
1	**DANGER** Make sure that all supplies for electrical power, hydraulic pressure, and air pressure are turned off.	

Continues on next page

© Copyright 2014 - 2017 ABB. All rights reserved.

	Action	Note
2	**CAUTION** For robots with protection type Clean Room: Always cut the paint with a knife and grind the paint edge when disassembling parts of the robot! See *Replacing parts on the robot on page 138*	
3	Pull the cable package out from the upper arm housing.	
4	Remove the fix sheet attachment screws in the lower arm.	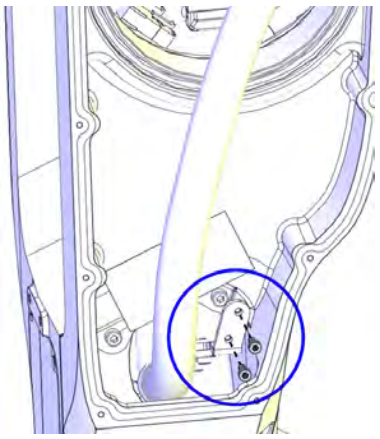 xx1300002426
5	Pull out the cable package a bit from the lower arm and remove the bracket from the cable package by removing the screws. **CAUTION** Do not loosen the cable clamp screw! There is a risk of rearrangement of the cable layout which would result in shortened lifetime of the cable harness.	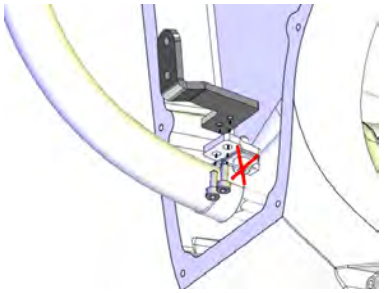 xx1300002430
6	Cut the cable strap that holds the cabling together inside the EIB/SMB cavity.	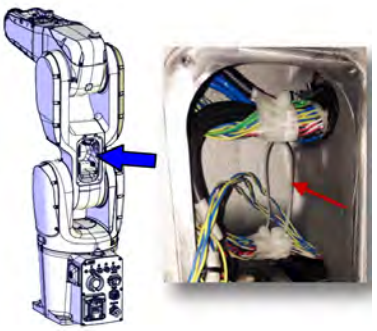 xx1400001130

Continues on next page

© Copyright 2014 - 2017 ABB. All rights reserved.

4.5.1 Replacing the base spare parts (base, axis-1 radial sealing, protection sleeve)
Continued

	Action	Note
7	**For robots with protection type Clean Room** Remove the swing sealing plug. Follow the procedure specified in *Removing the swing sealing plug on page 144*.	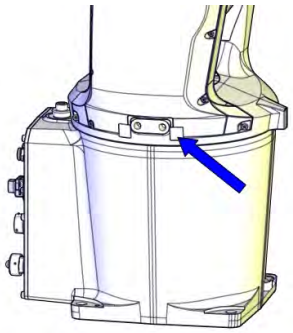 xx1600000205
8	Remove the swing cable housing cover by removing the screws.	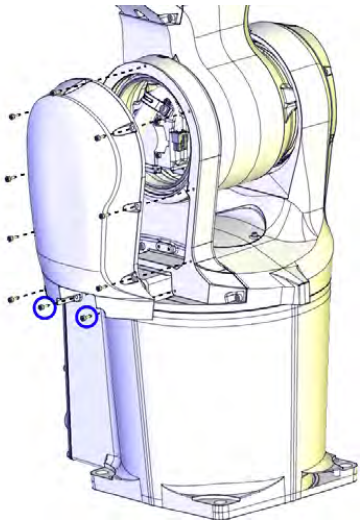 xx1300002431
9	Cut the cable straps.	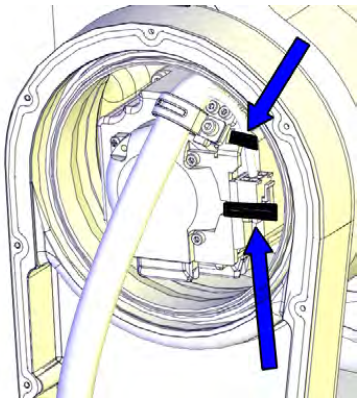 xx1400001528

Continues on next page

© Copyright 2014 - 2017 ABB. All rights reserved.

	Action	Note
10	Remove the axis-2 motor bracket screws.	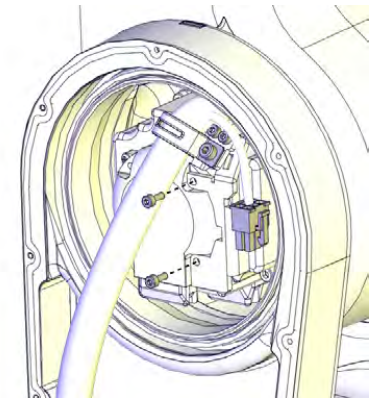 xx1300002432
11	Pull out the cabling and then remove the axis-2 motor bracket from the cable package by removing the screws. **CAUTION** Do not loosen the cable clamp screw! There is a risk of rearrangement of the cable layout which would result in shortened lifetime of the cable harness.	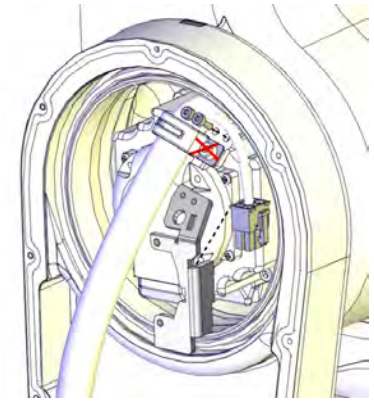 xx1300002433
12	Disconnect the motor connectors. • R2.ME2 • R2.MP2	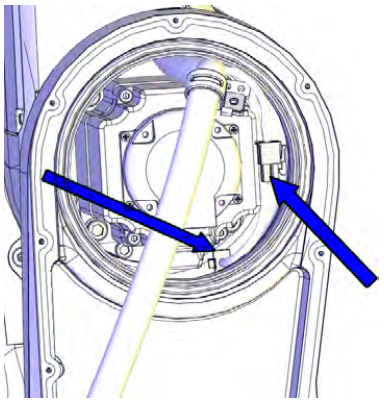 xx1300002434

Continues on next page

© Copyright 2014 - 2017 ABB. All rights reserved.

4.5.1 Replacing the base spare parts (base, axis-1 radial sealing, protection sleeve)

Continued

	Action	Note
13	Loosen the cable housing from the swing by removing the screws. Leave it hanging on the cable package.	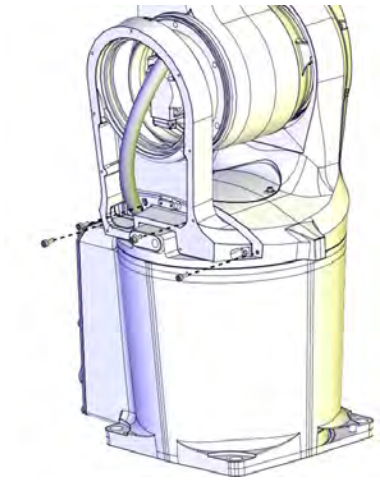 xx1300002435
14	Remove the axis-2 sealing ring by removing the screws.	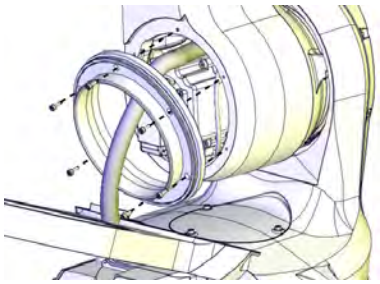 xx1400000020
15	Pull out the cable package from the lower arm. **Tip** There is a groove on the lower arm casting that simplifies cable passage, if needed. Its position can easily be felt by hand.	
16	Loosen the plastic plate from the cable housing in order to facilitate continued removal of the cable package .	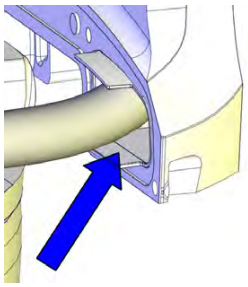 xx1400000023

Continues on next page

© Copyright 2014 - 2017 ABB. All rights reserved.

Putting the robot on its side

	Action	Note
1	**DANGER** Make sure that all supplies for electrical power, hydraulic pressure, and air pressure are turned off.	
2	**CAUTION** For Clean Room robots, apply a protection where the lifting accessories and round-slings will rub against the paint of the robot. In order to prevent from particle emission while lifting, put for example a 20 mm thick cellular plastic sheet around the places on the robot where the lifting accessories may rub against the paint.	
3	**CAUTION** The robot weighs . IRB 1200-5/0.9: 54 kg IRB 1200-7/0.7: 52 kg All lifting accessories used must be sized accordingly!	

Continues on next page

© Copyright 2014 - 2017 ABB. All rights reserved.

4.5.1 Replacing the base spare parts (base, axis-1 radial sealing, protection sleeve)

Continued

	Action	Note
4	Run a roundsling between the housing and the lower arm. **CAUTION** Put the sling on the lower arm side and **not** on the cable arm side, which would damage the robot.	Roundsling, 2 m 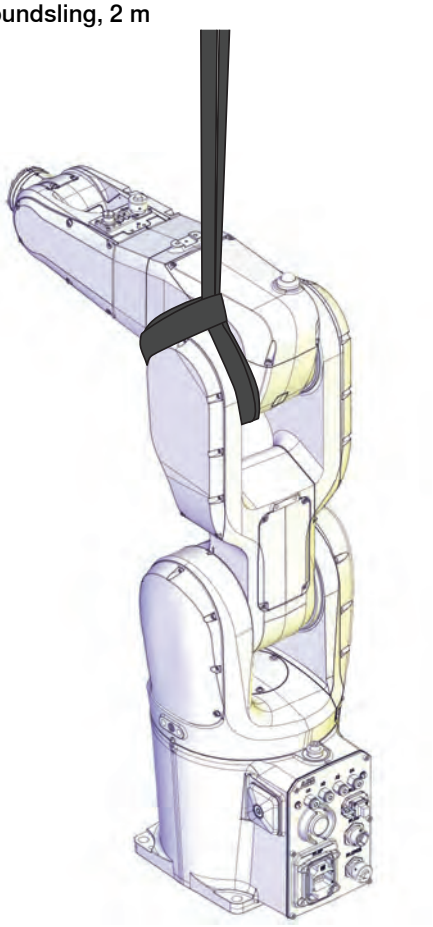 xx1400000679
5	**WARNING** The robot is likely to be mechanically unstable if not secured to the foundation!	
6	**CAUTION** The robot weighs . IRB 1200-5/0.9: 54 kg IRB 1200-7/0.7: 52 kg All lifting accessories used must be sized accordingly!	

Continues on next page

© Copyright 2014 - 2017 ABB. All rights reserved.

	Action	Note
7	Loosen the robot from the foundation by removing the foundation attachment screws and put the robot on its side.	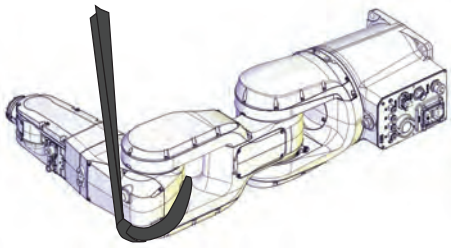 xx1400000680

Separating the arm system from base

	Action	Note
1	**DANGER** Make sure that all supplies for electrical power, hydraulic pressure, and air pressure are turned off.	
2	**CAUTION** For robots with protection type Clean Room: Always cut the paint with a knife and grind the paint edge when disassembling parts of the robot! See *Replacing parts on the robot on page 138*	
3	Remove the swing top cover by removing the screws. **Tip** Fit M4 screws in the cover holes to pull out the cover more easily. Only tighten the screws lightly in order not to damage the threads.	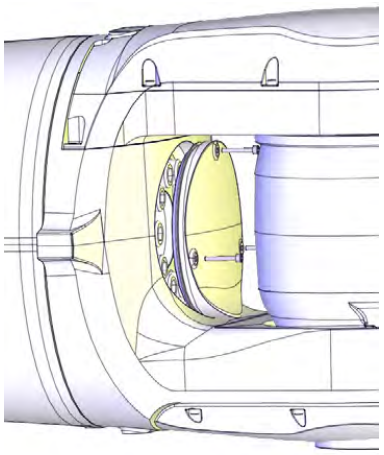 xx1300000467

Continues on next page

© Copyright 2014 - 2017 ABB. All rights reserved.

4.5.1 Replacing the base spare parts (base, axis-1 radial sealing, protection sleeve)

Continued

	Action	Note
4	Remove the screws and washers.	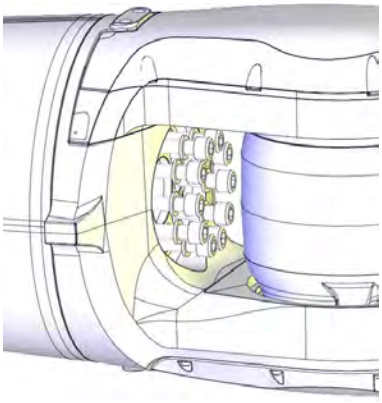 xx1300000471
5	Pull out the base slightly and turn it aside. **Tip** Remember the cable layout in the base. The cabling must be positioned and angled in the same way during refitting.	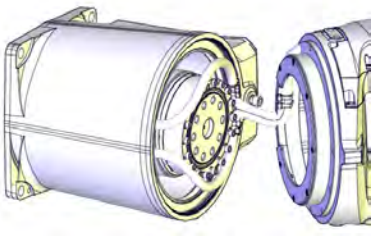 xx1300000472

Removing the cable package from the axis-1 sealing ring

	Action	Note
1	**CAUTION** For robots with protection type Clean Room: Always cut the paint with a knife and grind the paint edge when disassembling parts of the robot! See *Replacing parts on the robot on page 138*	
2	Remove the axis-1 sealing ring from the swing and carefully run the cable package out from the swing.	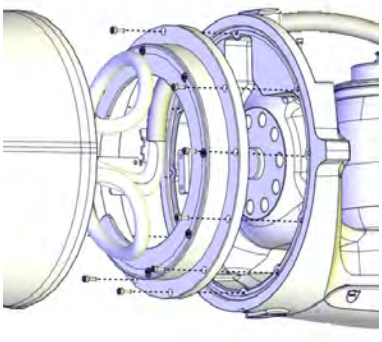 xx1300002438
3	Remove the swing (including arm system) completely from the base and lay it aside on a safe location.	

Continues on next page

© Copyright 2014 - 2017 ABB. All rights reserved.

	Action	Note
4	Remove the cable bracket from the cabling, if the cable package is to be replaced with a new spare part.	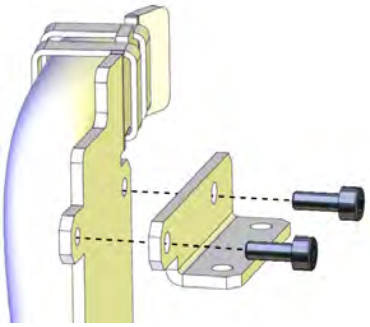 xx1300002446

Replacing the radial sealing (IP67 and Foundry Plus)

First remove the cabling according to *Removing the cabling on page 447*, then use this procedure to replace the axis-1 radial sealing.

The sealing is only used for robots with protection class IP67 (option 287-10) and protection type Foundry Plus (option 287-3).

Removing the axis-1 radial sealing and M2 variseal sealing

	Action	Note
1	**CAUTION** For robots with protection type Clean Room: Always cut the paint with a knife and grind the paint edge when disassembling parts of the robot! See *Replacing parts on the robot on page 138*	
2	Raise the base into standing and put most of the cable harness, including the sealing ring bracket, into the base (in the space of the protection sleeve).	

Continues on next page

© Copyright 2014 - 2017 ABB. All rights reserved.

4.5.1 Replacing the base spare parts (base, axis-1 radial sealing, protection sleeve)

Continued

	Action	Note
3	Remove the M2 variseal sealing. The M2 variseal sealing is only installed on base version 3HAC049628-001. See *Spare part versions for the base on IP40/IP67 robots on page 793*.	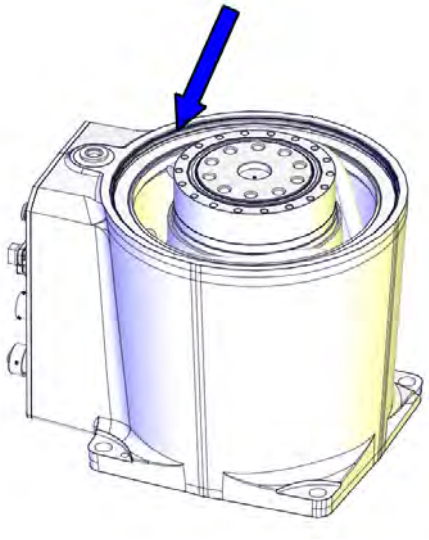 xx1400000780
4	Remove the radial sealing.	 xx1400000270

Refitting the axis-1 radial sealing and M2 variseal sealing

	Action	Note
1	Clean Room robots: clean the joints that have been opened. See *Replacing parts on the robot on page 138*	
2	**For robots with protection type Clean Room** Apply a little grease to the sealing when replacing the radial sealing and wipe clean after the replacement.	

Continues on next page

© Copyright 2014 - 2017 ABB. All rights reserved.

	Action	Note
3	Fit the new sealing in its groove in the base.	Radial sealing with dust lip: 3HAB3701-47 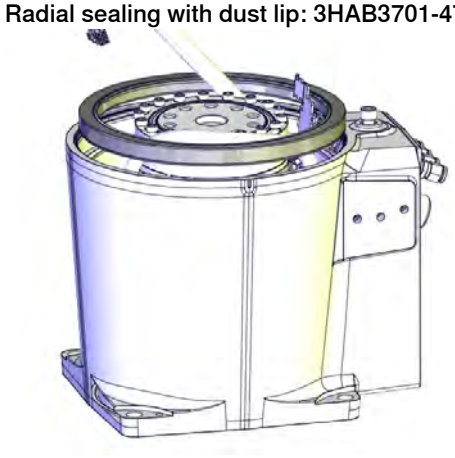 xx1400000270
4	Put the assembly tool against the axis-1 gear and slowly press the sealing into the base by screwing the five screws (M10X35) into the axis-1 gear screws little by little.	Axis-1 sealing assembly tool set: 3HAC049692-001 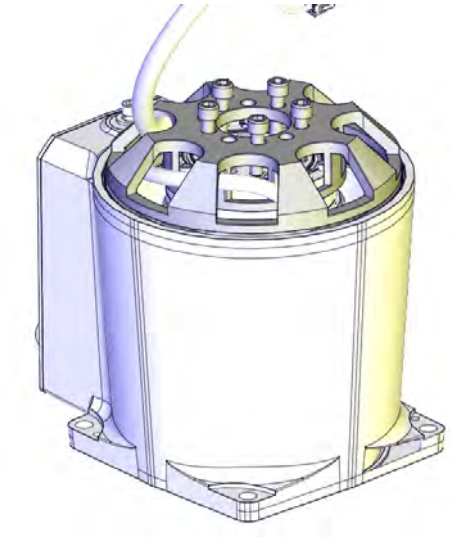 xx1400000271
5	Remove the assembly tool.	

Continues on next page

© Copyright 2014 - 2017 ABB. All rights reserved.

4.5.1 Replacing the base spare parts (base, axis-1 radial sealing, protection sleeve)
Continued

	Action	Note
6	Fit a new M2 variseal sealing in its groove in the base. The M2 variseal sealing is only installed on base version 3HAC049628-001. See *Spare part versions for the base on IP40/IP67 robots on page 793*. **CAUTION** Do not fit M2 variseal sealing on Clean Room robots.	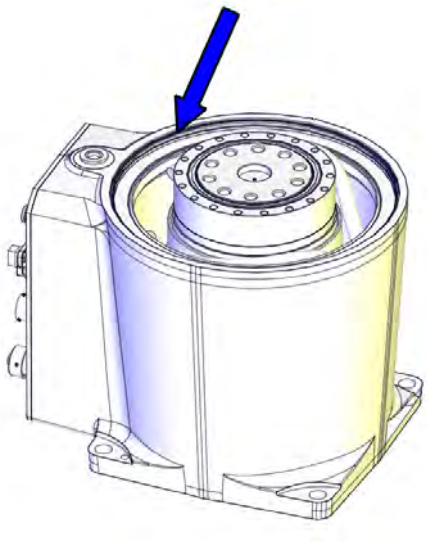 xx1400000780 M2 variseal sealing: 3HAC044641-002
7	Check that the sealings are undamaged and properly fitted.	
8	Clean Room robots: seal and paint the joints that have been opened. See *Replacing parts on the robot on page 138* **Note** After all repair work, wipe the robot free from particles with spirit on a lint free cloth.	

Replacing the M2 variseal sealing (IP67)

The M2 variseal sealing is only installed on base version 3HAC049628-001. See *Spare part versions for the base on IP40/IP67 robots on page 793*.

First remove the cabling according to *Removing the cabling on page 447*, then use this procedure to replace the M2 variseal sealing.

Note

The sealing is only used for robots with protection class IP67 (option 287-10) but not for Clean Room robots. Do not fit the sealing to Clean Room robots.

Continues on next page

© Copyright 2014 - 2017 ABB. All rights reserved.

Replacing the axis-1 M2 variseal sealing (IP67)

	Action	Note
1	**CAUTION** For robots with protection type Clean Room: Always cut the paint with a knife and grind the paint edge when disassembling parts of the robot! See *Replacing parts on the robot on page 138*	
2	Remove the sealing.	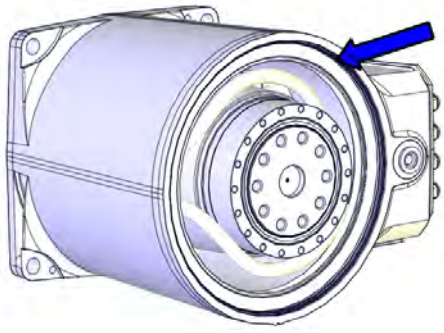 xx1400000472 M2 variseal sealing: 3HAC044641-002
3	Clean Room robots: clean the joints that have been opened. See *Replacing parts on the robot on page 138*	
4	Fit the new sealing in its groove in the base. **CAUTION** Do not fit M2 variseal sealing on Clean Room robots.	
5	Clean Room robots: seal and paint the joints that have been opened. See *Replacing parts on the robot on page 138* **Note** After all repair work, wipe the robot free from particles with spirit on a lint free cloth.	

Replacing the cable protection sleeve

First remove the cabling according to *Removing the cabling on page 447*, then use this procedure to replace the protection sleeve.

Replacing the cable protection sleeve

	Action	Note
1	**CAUTION** For robots with protection type Clean Room: Always cut the paint with a knife and grind the paint edge when disassembling parts of the robot! See *Replacing parts on the robot on page 138*	
2	Remove the cabling from the base.	

Continues on next page

© Copyright 2014 - 2017 ABB. All rights reserved.

4.5.1 Replacing the base spare parts (base, axis-1 radial sealing, protection sleeve)

Continued

	Action	Note
3	Remove the screws.	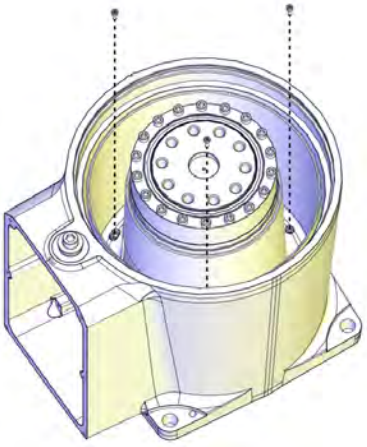 xx1400000776
4	Pull up the protection sleeve.	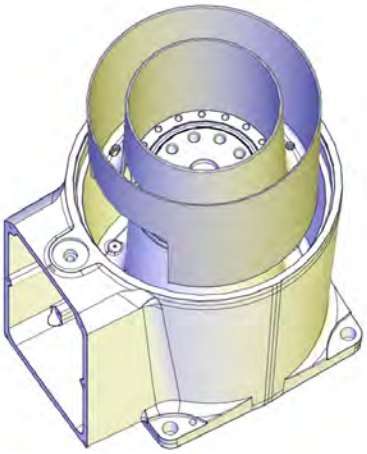 xx1400000777
5	Clean Room robots: clean the joints that have been opened. See *Replacing parts on the robot on page 138*	
6	Fit the new protection sleeve and secure with screws.	Tightening torque: 0.3 Nm.
7	Apply grease on the inner surface of the protection sleeve, also on the bottom surface.	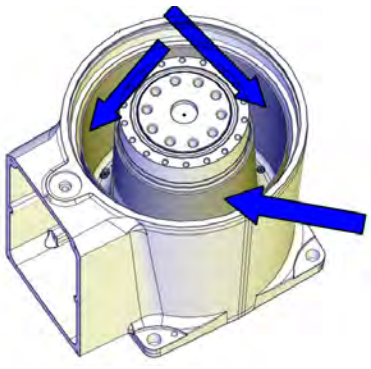 xx1400000778

Continues on next page

© Copyright 2014 - 2017 ABB. All rights reserved.

	Action	Note
8	Clean Room robots: seal and paint the joints that have been opened. See *Replacing parts on the robot on page 138* **Note** After all repair work, wipe the robot free from particles with spirit on a lint free cloth.	

Replacing the base

Use these procedures to replace the base.

Disconnecting the axis-1 motor connectors

	Action	Note
1	**DANGER** Make sure that all supplies for electrical power, hydraulic pressure, and air pressure are turned off.	
2	**CAUTION** For robots with protection type Clean Room: Always cut the paint with a knife and grind the paint edge when disassembling parts of the robot! See *Replacing parts on the robot on page 138*	

Continues on next page

© Copyright 2014 - 2017 ABB. All rights reserved.

4.5.1 Replacing the base spare parts (base, axis-1 radial sealing, protection sleeve)

Continued

	Action	Note
3	Remove the bottom cover.	Rear connector interface: 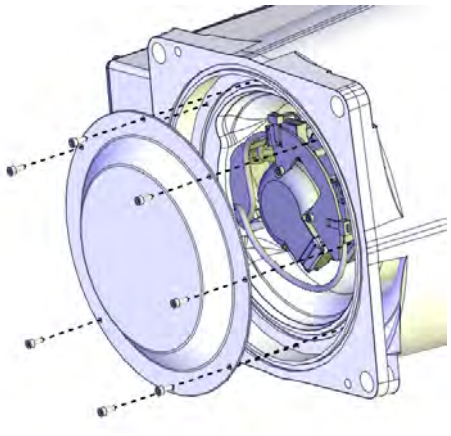 xx1300000469 Bottom connector interface: 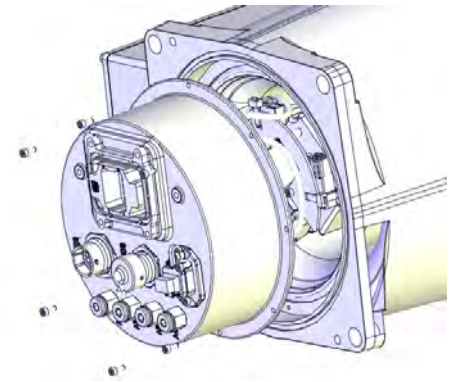 xx1400000403

Continues on next page

© Copyright 2014 - 2017 ABB. All rights reserved.

4.5.1 Replacing the base spare parts (base, axis-1 radial sealing, protection sleeve)
Continued

	Action	Note
4	Remove the axis-1 motor bracket.	Rear connector interface: 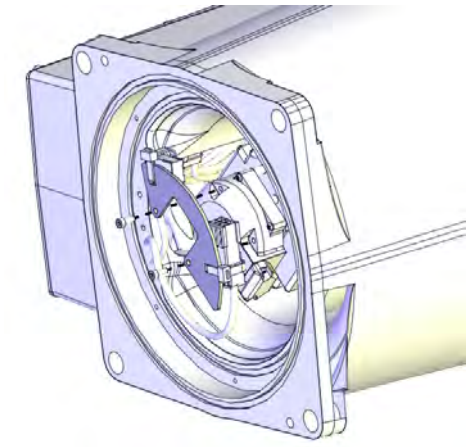 xx1300000470 Bottom connector interface: 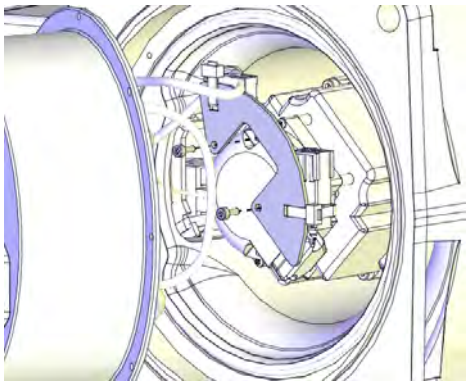 xx1400000404
5	Loosen the connectors from the bracket by cutting the cable straps, and disconnect the connectors.	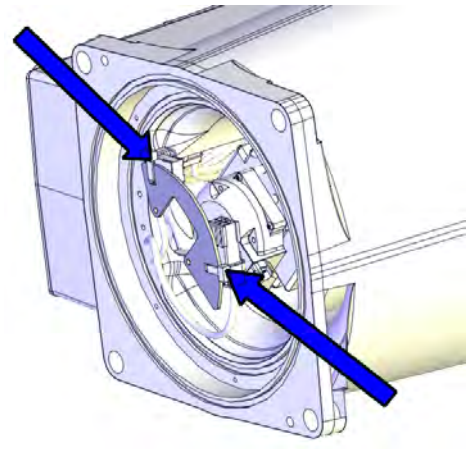 xx1300002496

Continues on next page

© Copyright 2014 - 2017 ABB. All rights reserved.

4.5.1 Replacing the base spare parts (base, axis-1 radial sealing, protection sleeve)
Continued

Removing the cable package from the base

Notice that the procedure differs depending on if the connector interface is located either at the rear or at the bottom of the base.

Cabling with rear interface

Use this procedure if the cable connector interface is located at the rear of the base.

	Action	Note
1	**DANGER** Make sure that all supplies for electrical power, hydraulic pressure, and air pressure are turned off.	
2	**CAUTION** For robots with protection type Clean Room: Always cut the paint with a knife and grind the paint edge when disassembling parts of the robot! See *Replacing parts on the robot on page 138*	
3	Open the base cover.	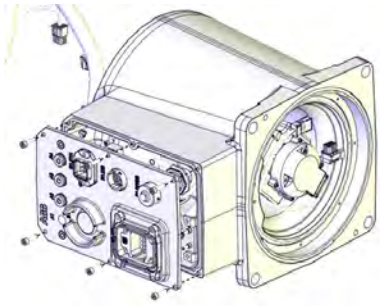 xx1300002448
4	Disconnect the earth cable.	
5	Pull the cable package out from the base, through the rear.	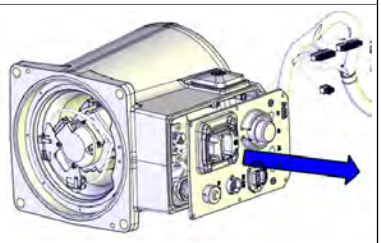 xx1300002456

Continues on next page

© Copyright 2014 - 2017 ABB. All rights reserved.

Cabling with bottom interface, and cabling routed from below (option 996-1)

Use this procedure if the cable connector interface is located at the bottom of the base and the cabling is routed from below.

	Action	Note
1	**DANGER** Make sure that all supplies for electrical power, hydraulic pressure, and air pressure are turned off.	
2	**CAUTION** For robots with protection type Clean Room: Always cut the paint with a knife and grind the paint edge when disassembling parts of the robot! See *Replacing parts on the robot on page 138*	
3	Open the base cover.	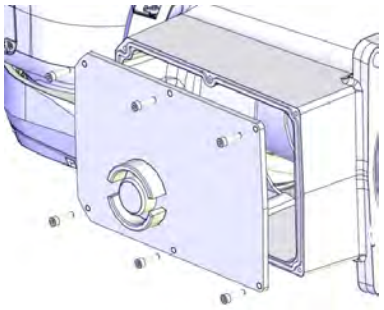 xx1400000405
4	Remove the brake release button from the base cover.	
5	Disconnect the earth cable.	
6	Remove the cable bracket by removing the screws.	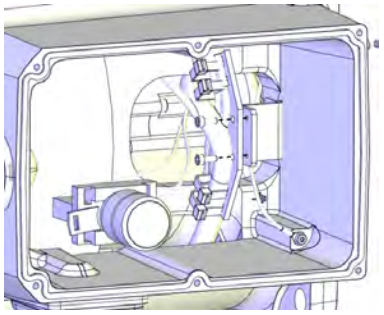 xx1400000406

Continues on next page

© Copyright 2014 - 2017 ABB. All rights reserved.

4.5.1 Replacing the base spare parts (base, axis-1 radial sealing, protection sleeve)
Continued

	Action	Note
7	Remove the bracket inside the base by removing the screws.	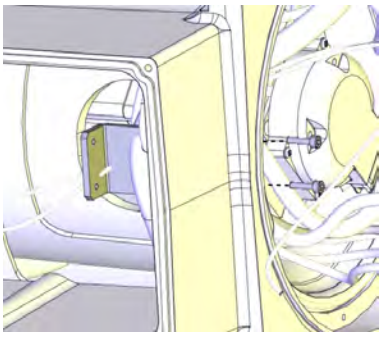 xx1400000407
8	Pull the cable package out from the base, through the bottom.	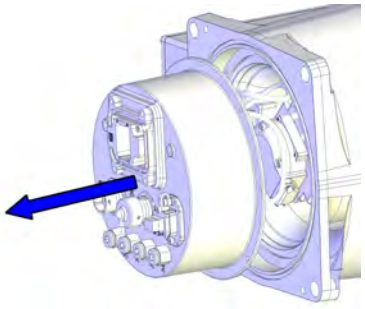 xx1400000411

Removing the axis-1 radial sealing and M2 variseal sealing

	Action	Note
1	**CAUTION** For robots with protection type Clean Room: Always cut the paint with a knife and grind the paint edge when disassembling parts of the robot! See *Replacing parts on the robot on page 138*	
2	Raise the base into standing and put most of the cable harness, including the sealing ring bracket, into the base (in the space of the protection sleeve).	

Continues on next page

© Copyright 2014 - 2017 ABB. All rights reserved.

	Action	Note
3	Remove the M2 variseal sealing. The M2 variseal sealing is only installed on base version 3HAC049628-001. See *Spare part versions for the base on IP40/IP67 robots on page 793*.	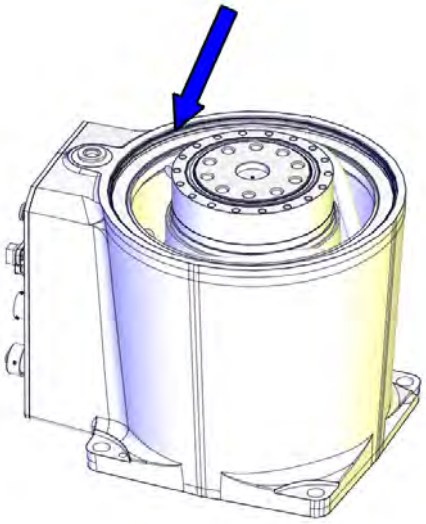 xx1400000780
4	Remove the radial sealing.	 xx1400000270

Replacing the base

	Action	Note
1	**CAUTION** For robots with protection type Clean Room: Always cut the paint with a knife and grind the paint edge when disassembling parts of the robot! See *Replacing parts on the robot on page 138*	

Continues on next page

© Copyright 2014 - 2017 ABB. All rights reserved.

4.5.1 Replacing the base spare parts (base, axis-1 radial sealing, protection sleeve)
Continued

	Action	Note
2	Move the protection sleeve from the old base to the new.	Tightening torque: 0.3 Nm. 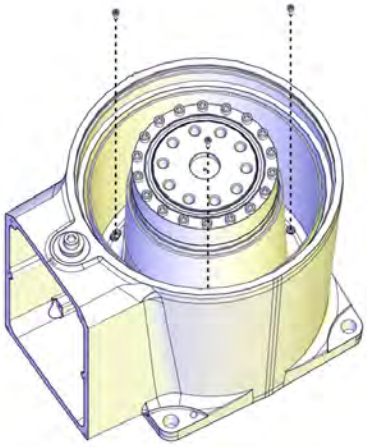 xx1400000776
3	Move the axis-1 mechanical stop set from the old base to the new. Replace if damaged.	Tightening torque: 12 Nm. 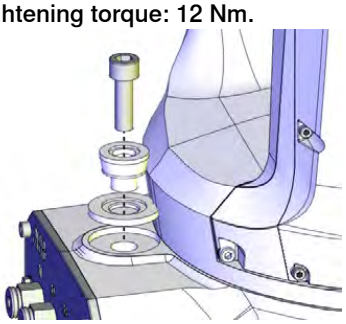 xx1400000392

Refitting the axis-1 radial sealing and M2 variseal sealing

	Action	Note
1	Clean Room robots: clean the joints that have been opened. See *Replacing parts on the robot on page 138*	
2	**For robots with protection type Clean Room** Apply a little grease to the sealing when replacing the radial sealing and wipe clean after the replacement.	

Continues on next page

© Copyright 2014 - 2017 ABB. All rights reserved.

4.5.1 Replacing the base spare parts (base, axis-1 radial sealing, protection sleeve)
Continued

	Action	Note
3	Fit the new sealing in its groove in the base.	Radial sealing with dust lip: 3HAB3701-47 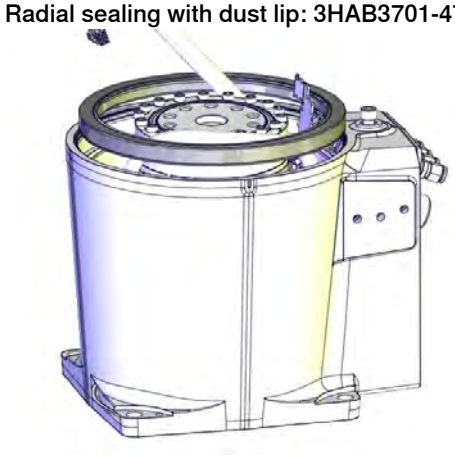 xx1400000270
4	Put the assembly tool against the axis-1 gear and slowly press the sealing into the base by screwing the five screws (M10X35) into the axis-1 gear screws little by little.	Axis-1 sealing assembly tool set: 3HAC049692-001 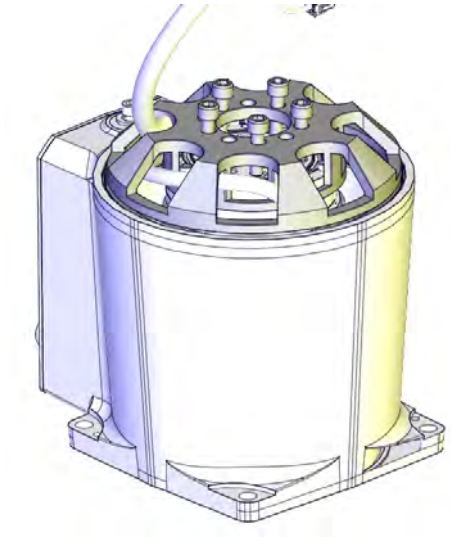 xx1400000271
5	Remove the assembly tool.	

Continues on next page

© Copyright 2014 - 2017 ABB. All rights reserved.

4.5.1 Replacing the base spare parts (base, axis-1 radial sealing, protection sleeve)
Continued

	Action	Note
6	Fit a new M2 variseal sealing in its groove in the base. The M2 variseal sealing is only installed on base version 3HAC049628-001. See *Spare part versions for the base on IP40/IP67 robots on page 793*. **CAUTION** Do not fit M2 variseal sealing on Clean Room robots.	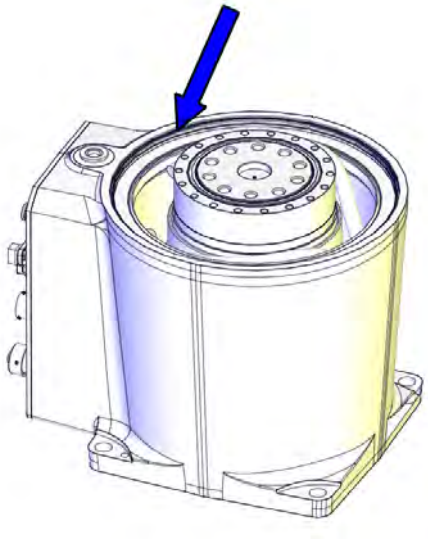 xx1400000780 M2 variseal sealing: 3HAC044641-002
7	Check that the sealings are undamaged and properly fitted.	
8	Clean Room robots: seal and paint the joints that have been opened. See *Replacing parts on the robot on page 138* **Note** After all repair work, wipe the robot free from particles with spirit on a lint free cloth.	

Refitting the cable package to the base

Notice that the procedure differs depending on if the connector interface is located either at the rear or at the bottom of the base.

Cabling with rear interface

Use this procedure if the cable connector interface is located at the rear of the base.

	Action	Note
1	Clean Room robots: clean the joints that have been opened. See *Replacing parts on the robot on page 138*	

Continues on next page

© Copyright 2014 - 2017 ABB. All rights reserved.

	Action	Note
2	**For robots with protection class IP67 (option 287-10)** **For robots with protection type Foundry Plus (option 287-3)** **For robots with with protection type Clean Room** **For robots with food grade lubrication** Check the gasket on the base cover. Replace if damaged.	Gasket for rear base cover: 3HAC058566-001 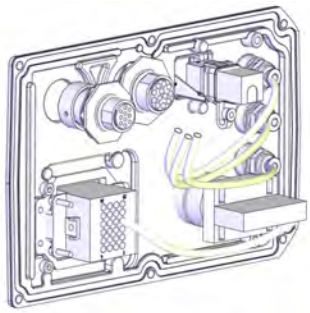 xx1400000741
3	Insert the cable package in and up through the base, through the rear.	
4	Reconnect the earth cable.	
5	Refit the base cover with the attachment screws.	Screws: 3HAB3409-212 (M4x16). Tightening torque: 4 Nm. 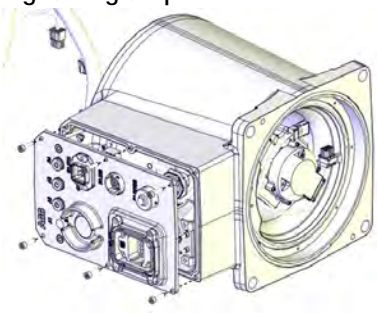 xx1300002448 **Note** Only use specified screws, never replace them with other screws.
6	Route the cable package inside the base as shown in the figure. Apply grease to the cable package, cover all moving area of the package.	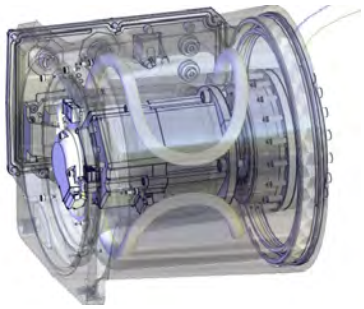 xx1400000480
7	Clean Room robots: seal and paint the joints that have been opened. See *Replacing parts on the robot on page 138* **Note** After all repair work, wipe the robot free from particles with spirit on a lint free cloth.	

Continues on next page

© Copyright 2014 - 2017 ABB. All rights reserved.

4.5.1 Replacing the base spare parts (base, axis-1 radial sealing, protection sleeve)
Continued

Cabling with bottom interface, cabling routed from below (option 996-1)

Use this procedure if the cable connector interface is located at the bottom of the base and the cabling is routed from below.

	Action	Note
1	Clean Room robots: clean the joints that have been opened. See *Replacing parts on the robot on page 138*	
2	Insert the cable package in and up through the base, through the bottom.	
3	Refit the bracket inside the base with the screws.	Tightening torque: 1.5 Nm. 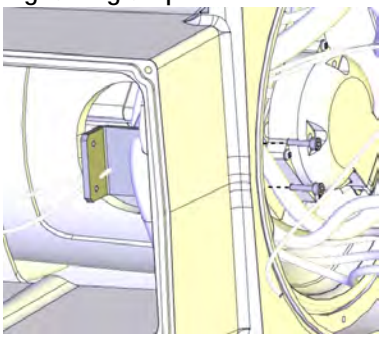 xx1400000407
4	Refit the cable bracket with the screws.	Tightening torque: 1.5 Nm. 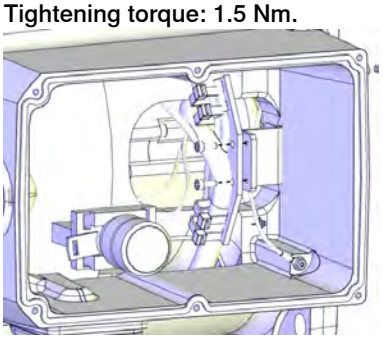 xx1400000406
5	**For robots with protection class IP67 (option 287-10)** **For robots with protection type Foundry Plus (option 287-3)** **For robots with with protection type Clean Room** **For robots with food grade lubrication** Check the gasket of the base cover. Replace if damaged.	Gasket for rear base cover: 3HAC058566-001 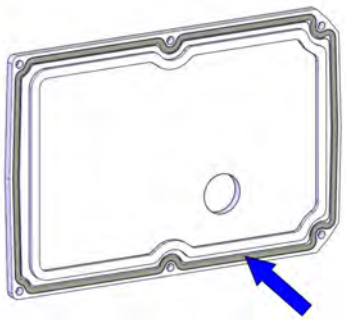 xx1400000413
6	Reconnect the earth cable.	
7	Refit the brake release button to the base cover.	

Continues on next page

© Copyright 2014 - 2017 ABB. All rights reserved.

	Action	Note
8	Refit the base cover.	Screws: 3HAB3409-212 (M4x16). Tightening torque: 4 Nm. 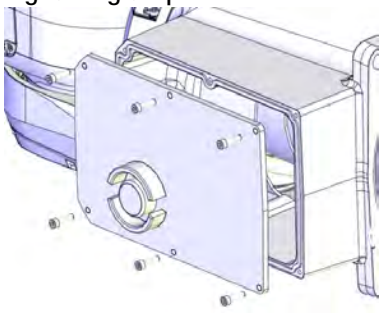 xx1400000405 **Note** Only use specified screws, never replace them with other screws.
9	Route the cable package inside the base as shown in the figure. Apply grease to the cable package, cover all moving area of the package.	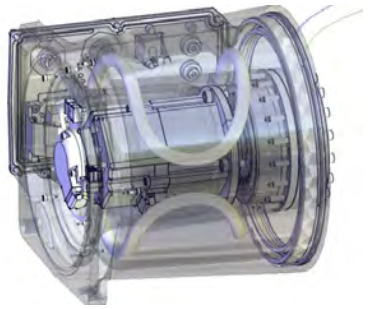 xx1400000480
10	Clean Room robots: seal and paint the joints that have been opened. See *Replacing parts on the robot on page 138* **Note** After all repair work, wipe the robot free from particles with spirit on a lint free cloth.	

Refitting the cabling

Use these procedures to refit the cabling, after the base part in question has been replaced.

Refitting the cable package to the axis-1 sealing ring

	Action	Note
1	Clean Room robots: clean the joints that have been opened. See *Replacing parts on the robot on page 138*	
2	Check the axis-1 sealing ring. Replace if damaged.	Axis-1 sealing ring: 3HAC044676-001 / 3HAC058568-001 i

Continues on next page

© Copyright 2014 - 2017 ABB. All rights reserved.

4.5.1 Replacing the base spare parts (base, axis-1 radial sealing, protection sleeve)
Continued

	Action	Note
3	**For robots with protection class IP67 (option 287-10)** On axis-1 sealing ring version 3HAC056658-001: Add sealant to the axis-1 sealing ring. (See *Spare part versions for the axis-1 sealing ring on IP40/IP67 robots on page 797*.)	Sealant: Sikaflex 521FC. 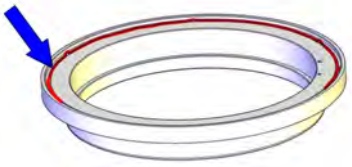 xx1600001125
4	**For robots with protection class IP67 (option 287-10)** On axis-1 sealing ring version 3HAC044676-001 or 3HAC058568-001: **For robots with protection type Foundry Plus (option 287-3)** On axis-1 sealing ring version 3HAC058568-001: Check the gasket on the axis-1 sealing ring. (See *Spare part versions for the axis-1 sealing ring on IP40/IP67 robots on page 797*.) Replace if damaged.	On axis-1 sealing ring version 3HAC044676-001: Axis-1 sealing ring gasket: 3HAC045685-001  xx1400000458 On axis-1 sealing ring version 3HAC058568-001: Axis-1 sealing ring gasket: 3HAC058349-001 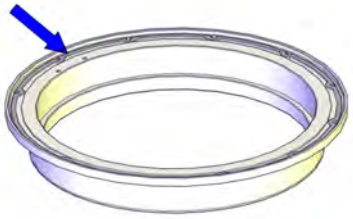 xx1600001149
5	**For robots with protection class IP67 (option 287-10)** On axis-1 sealing ring version 3HAC056658-001 or 3HAC058568-001: **For robots with protection type Foundry Plus (option 287-3)** On axis-1 sealing ring version 3HAC058568-001: Check the V-ring on the axis-1 sealing ring. (See *Spare part versions for the axis-1 sealing ring on IP40/IP67 robots on page 797*.) Replace if damaged.	V-ring: 3HAB3732-34 On axis-1 sealing ring version 3HAC056658-001:  xx1600001124 On axis-1 sealing ring version 3HAC058568-001:  xx1600001150

Continues on next page

© Copyright 2014 - 2017 ABB. All rights reserved.

	Action	Note
6	Check the cable protection on the axis-1 sealing ring. Replace if damaged. If replacing the cable protection, use locking liquid Loctite 243 on the screws.	Cable protection: 3HAC044691-001 Torx countersunk head screw M3x5: 3HAC14286-4 Tightening torque: 0.3 Nm  xx1400000456
7	Refit the cable bracket to the cabling, if removed. Use Loctite 243 on the screw threads.	Tightening torque: 1 Nm. 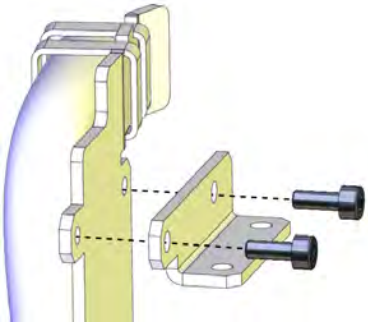 xx1300002446
8	Refit the axis-1 sealing ring to the swing and carefully run the cabling into the swing.	Tightening torque: 1.5 Nm. 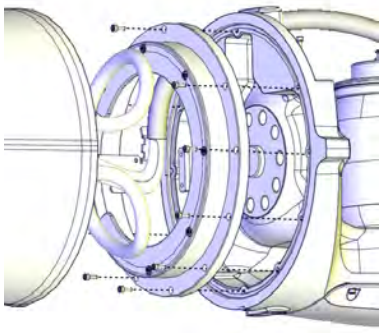 xx1300002438
9	Clean Room robots: seal and paint the joints that have been opened. See *Replacing parts on the robot on page 138* **Note** After all repair work, wipe the robot free from particles with spirit on a lint free cloth.	

i For information on which sealing ring to be ordered, see *Spare part versions for the axis-1 sealing ring on IP40/IP67 robots on page 797*.

Continues on next page

© Copyright 2014 - 2017 ABB. All rights reserved.

4.5.1 Replacing the base spare parts (base, axis-1 radial sealing, protection sleeve)
Continued

Assembling the swing and base

	Action	Note
1	Clean Room robots: clean the joints that have been opened. See *Replacing parts on the robot on page 138*	
2	Check the axis-1 radial sealing and the M2 variseal sealing in the base. Replace if damaged. **Note** For Clean Room robots, apply a little grease to the sealing when replacing the radial sealing and wipe clean after the replacement. The M2 variseal sealing is only installed on base version 3HAC049628-001. See *Spare part versions for the base on IP40/IP67 robots on page 793*. **CAUTION** Do not fit M2 variseal sealing on Clean Room robots.	Radial sealing with dust lip: 3HAB3701-47 M2 variseal sealing: 3HAC044641-002 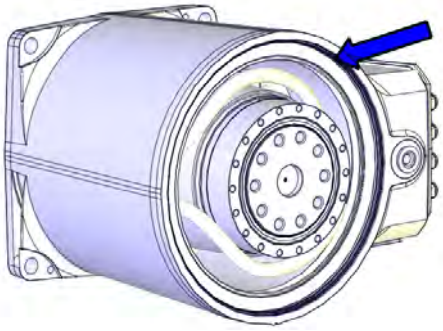 xx1400000472 Replacement is detailed in *Replacing the base spare parts (base, axis-1 radial sealing, protection sleeve) on page 442*.
3	**For robots with protection class IP67 (option 287-10)** **For robots with protection type Foundry Plus (option 287-3)** Apply grease to the radial sealing surface.	Grease: 3HAC058065-001. 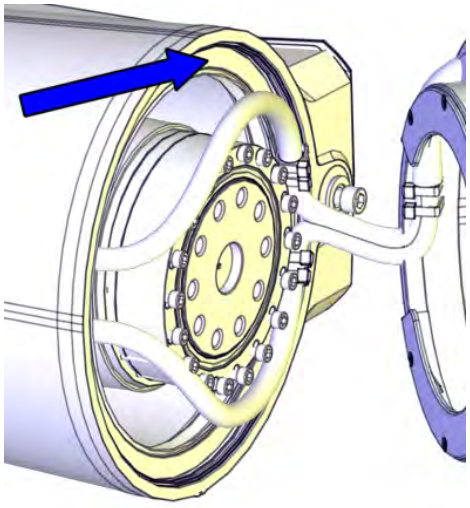 xx1600000170

Continues on next page

© Copyright 2014 - 2017 ABB. All rights reserved.

4.5.1 Replacing the base spare parts (base, axis-1 radial sealing, protection sleeve)
Continued

	Action	Note
4	Fit the guide pins to the drive unit.	Guide pin for axis-1 gear unit: 3HAC049703-001 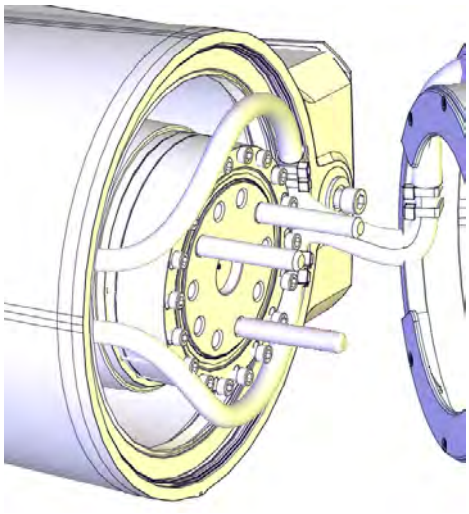 xx1300002566 Always use three guide pins together!
5	Refit the swing to the base with guidance from the guide pins while running the cabling up through the swing. Position and angle the cabling inside the base as it was positioned during removal. **CAUTION** Be careful not to squeeze any cabling during the refitting procedure.	
6	Secure with attachment screws and washers, but do not tighten yet.	Screws: 3HAB3409-52 (M10x35). 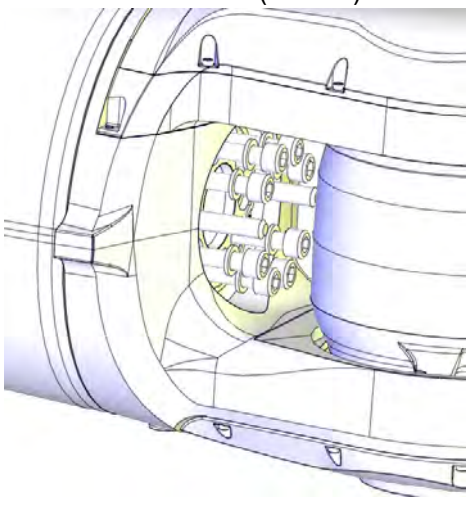 xx1300002567 **Note** Only use specified screws, never replace them with other screws.

Continues on next page

© Copyright 2014 - 2017 ABB. All rights reserved.

4.5.1 Replacing the base spare parts (base, axis-1 radial sealing, protection sleeve)

Continued

	Action	Note
7	Remove the guide pins and refit the remaining attachment screws and washers.	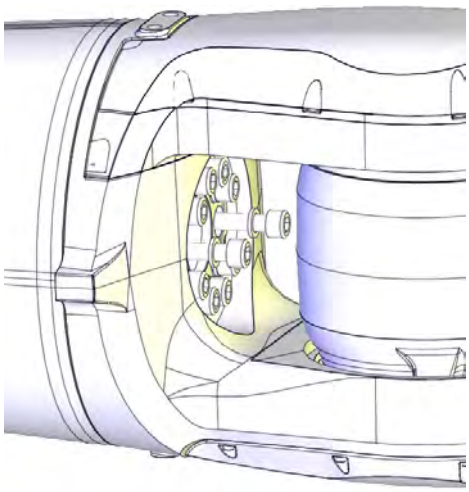 xx1300000523
8	Tighten all screws.	Tightening torque: 40 Nm.
9	**For robots with protection class IP67 (option 287-10)** **For robots with protection type Foundry Plus (option 287-3)** **For robots with with protection type Clean Room** **For robots with food grade lubrication** Check the gasket. Replace if damaged.	Gasket on top swing cover: 3HAC056696-001 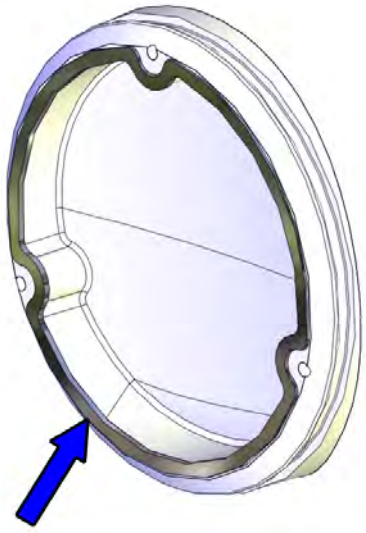 xx1400000425

Continues on next page

© Copyright 2014 - 2017 ABB. All rights reserved.

	Action	Note
10	Refit the swing top cover with the screws. Replace if damaged.	Cover on top of swing: 3HAC059679-001 : 3HAC056133-001 (used with protection type Clean Room) Cover on top of swing, Clean Room Cover on top of swing, food grade lubrication Screws: 3HAB3409-209 (M3x20). Tightening torque: 1.5 Nm. 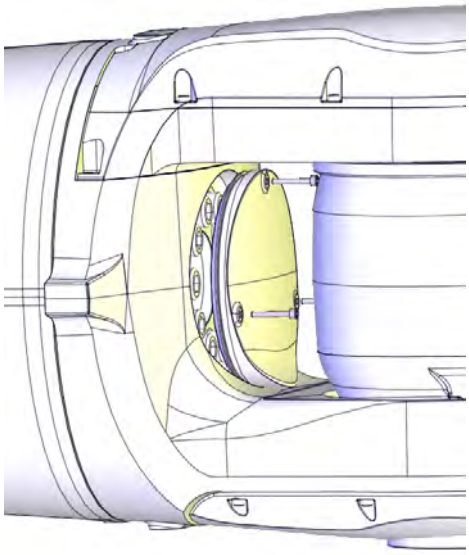 xx1300000467 **Note** Only use specified screws, never replace them with other screws.
11	Clean Room robots: seal and paint the joints that have been opened. See *Replacing parts on the robot on page 138* **Note** After all repair work, wipe the robot free from particles with spirit on a lint free cloth.	

Connecting the axis-1 motor connectors

	Action	Note
1	Clean Room robots: clean the joints that have been opened. See *Replacing parts on the robot on page 138*	

Continues on next page

© Copyright 2014 - 2017 ABB. All rights reserved.

4.5.1 Replacing the base spare parts (base, axis-1 radial sealing, protection sleeve)

Continued

	Action	Note
2	Reconnect the connectors and secure the connectors to the bracket with cable straps.	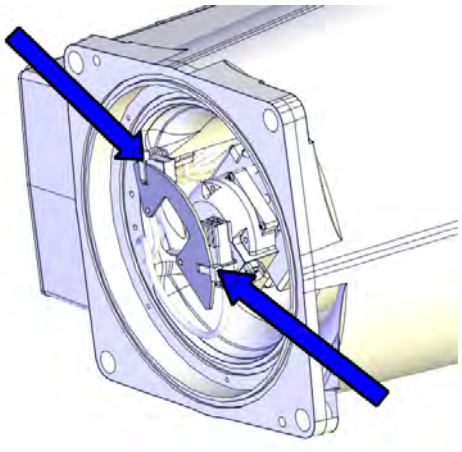 xx1300002496
3	Refit the axis-1 motor bracket.	Tightening torque: 1.5 Nm. Rear connector interface: 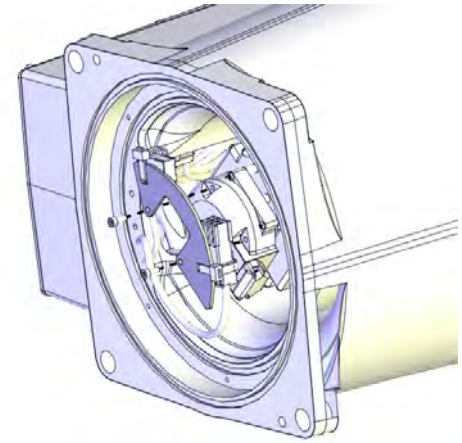 xx1300000470 Bottom connector interface: 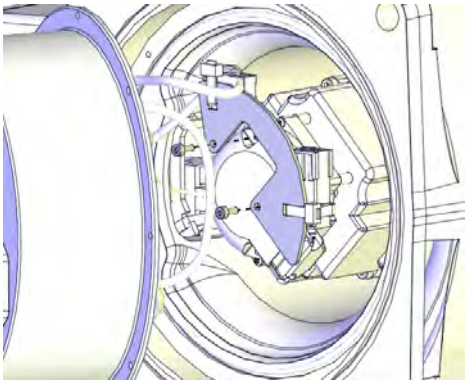 xx1400000404

Continues on next page

© Copyright 2014 - 2017 ABB. All rights reserved.

	Action	Note
4	**For robots with protection class IP67 (option 287-10)** **For robots with protection type Foundry Plus (option 287-3)** **For robots with with protection type Clean Room** **For robots with food grade lubrication** Check the O-ring. Replace if damaged.	O-ring: 3HAB3772-86 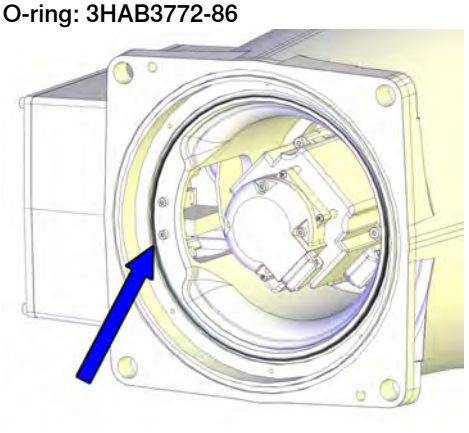 xx1400000412
5	Refit the bottom cover.	Screws: 3HAB3409-207 (M3x8). Tightening torque: 1.5 Nm. Rear connector interface: 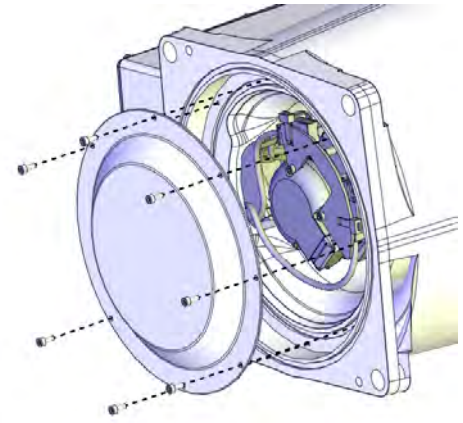 xx1300000469 Bottom connector interface: 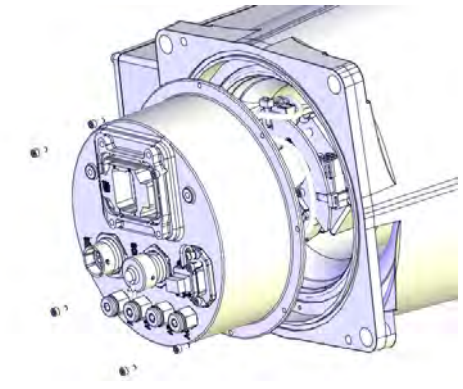 xx1400000403 **Note** Only use specified screws, never replace them with other screws.

Continues on next page

© Copyright 2014 - 2017 ABB. All rights reserved.

4.5.1 Replacing the base spare parts (base, axis-1 radial sealing, protection sleeve)
Continued

	Action	Note
6	Clean Room robots: seal and paint the joints that have been opened. See *Replacing parts on the robot on page 138* **Note** After all repair work, wipe the robot free from particles with spirit on a lint free cloth.	

Securing the robot to the foundation

	Action	Note
1	**CAUTION** The robot weighs . IRB 1200-5/0.9: 54 kg IRB 1200-7/0.7: 52 kg All lifting accessories used must be sized accordingly!	
2	**For robots with:** **protection class IP67 (option 287-10),** **protection type Foundry Plus (option 287-3),** **and manipulator cables routed from below (option 996-1)** Check the gasket at the bottom of the base. Replace if damaged.	O-ring: 3HAB3772-141 Used with protection class IP67. Used with protection type Foundry Plus. Used with manipulator cables routed from below (option 996-1) 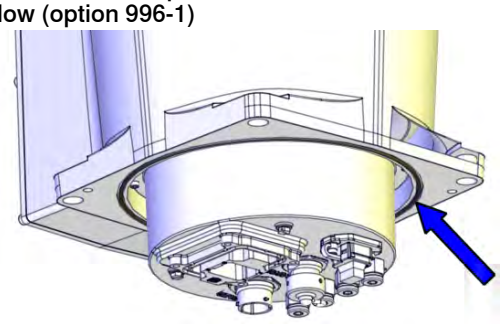 xx1500000241
3	Raise the robot to standing and secure to the foundation with the attachment screws and washers.	Attachment screws: M12x35 (robot installation directly on foundation), quality: 8.8. Washers: 13 x 20 x 2, steel hardness class 300HV. Pin: 2 pcs, D6x20, ISO 2338 - 6m6x20 - A1. Tightening Torque: 55 Nm ± 5 Nm.

Refitting the cable package in the lower arm

	Action	Note
1	Clean Room robots: clean the joints that have been opened. See *Replacing parts on the robot on page 138*	

Continues on next page

© Copyright 2014 - 2017 ABB. All rights reserved.

4.5.1 Replacing the base spare parts (base, axis-1 radial sealing, protection sleeve)
Continued

	Action	Note
2	Check the axis-2 sealing ring. **For robots with protection class IP67 (option 287-10)** **For robots with protection type Foundry Plus (option 287-3)** **For robots with with protection type Clean Room** **For robots with food grade lubrication** Check the gasket. Replace if damaged.	Axis-2 sealing ring: 3HAC044677-001 Gasket of axis-2 sealing ring: 3HAC045688-001 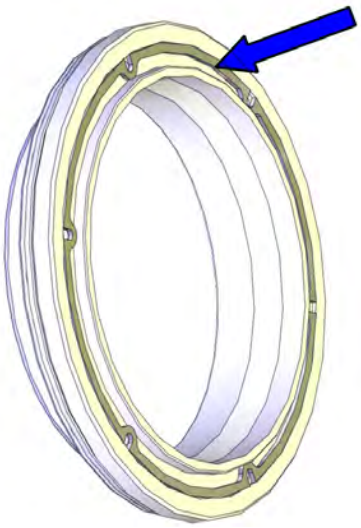 xx1400000476
3	**For robots with protection class IP67 (option 287-10)** **For robots with protection type Foundry Plus (option 287-3)** **For robots with with protection type Clean Room** **For robots with food grade lubrication** Check the gasket of the cable housing plastic plate. Replace if damaged.	Gasket of plastic plate: 3HAC044894-001 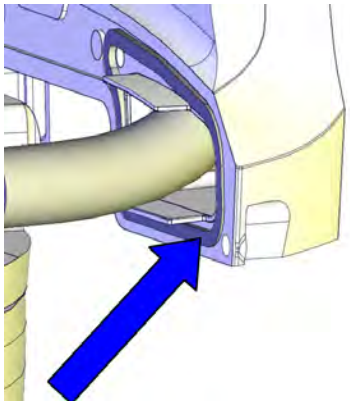 xx1400000457
4	Fetch the cable housing, the plastic plate and the axis-2 sealing ring and run the cable package through them.	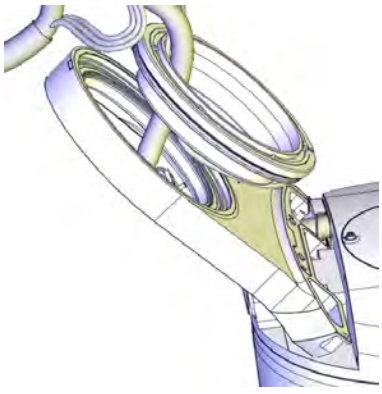 xx1400000025

Continues on next page

© Copyright 2014 - 2017 ABB. All rights reserved.

4.5.1 Replacing the base spare parts (base, axis-1 radial sealing, protection sleeve)

Continued

	Action	Note
5	Fasten the plastic plate to the cable housing, if removed. Replace if damaged.	The plastic plate is included in: Cable harness material set: 3HAC049663-001. 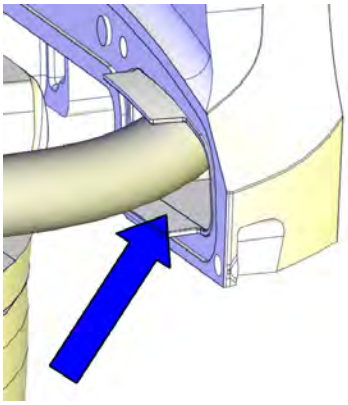 xx1400000023
6	**For robots with protection class IP67 (option 287-10)** **For robots with protection type Foundry Plus (option 287-3)** Check the sealing. Replace if damaged. **CAUTION** Do not fit M2 variseal sealing on Clean Room robots.	M2 variseal sealing: 3HAC044641-004 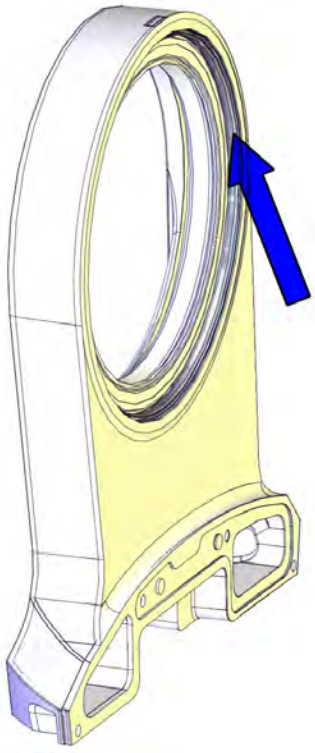 xx1400000454

Continues on next page

© Copyright 2014 - 2017 ABB. All rights reserved.

	Action	Note
7	**For robots with protection class IP67 (option 287-10)** **For robots with protection type Foundry Plus (option 287-3)** **For robots with with protection type Clean Room** **For robots with food grade lubrication** Check the radial sealing. Replace if damaged. **Note** For Clean Room robots, apply a little grease to the sealing when replacing the radial sealing and wipe clean after the replacement.	Radial sealing with dust lip: 3HAB3701-41 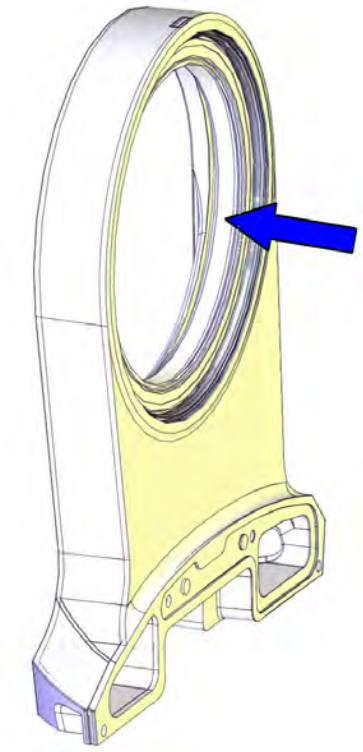 xx1400000753 Replacement is detailed in *Replacing the swing spare parts (swing, axis-2 radial sealing) on page 518*.
8	Guide the cable package into the lower arm. **Tip** There is a groove on the lower arm casting that simplifies cable passage, if needed. Its position can easily be felt by hand.	
9	Refit the axis-2 sealing ring with the screws.	Tightening torque: 1.5 Nm. 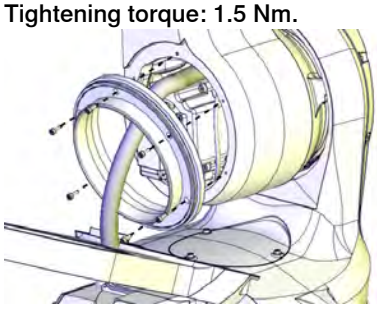 xx1400000020

Continues on next page

© Copyright 2014 - 2017 ABB. All rights reserved.

4.5.1 Replacing the base spare parts (base, axis-1 radial sealing, protection sleeve)

Continued

	Action	Note
10	Refit the cable housing with the screws.	Screws: 3HAB3409-236 (M4x10). Tightening torque: 3 Nm. 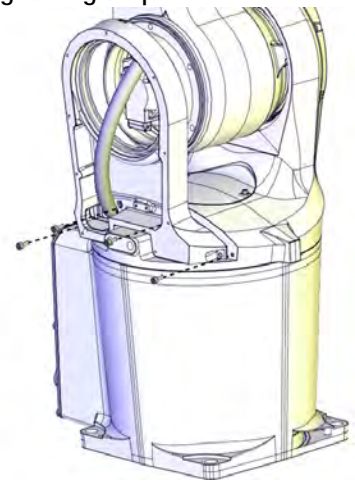 xx1300002435 **Note** Only use specified screws, never replace them with other screws.
11	Apply grease to the cable package, cover all moving area of the package.	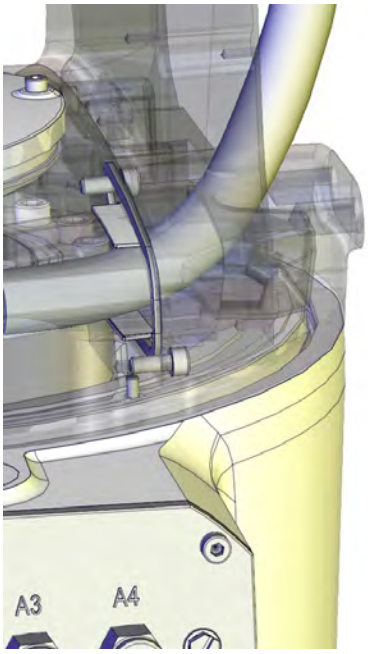 xx1400000481

Continues on next page

© Copyright 2014 - 2017 ABB. All rights reserved.

	Action	Note
12	Reconnect the motor connectors. • R2.ME2 • R2.MP2	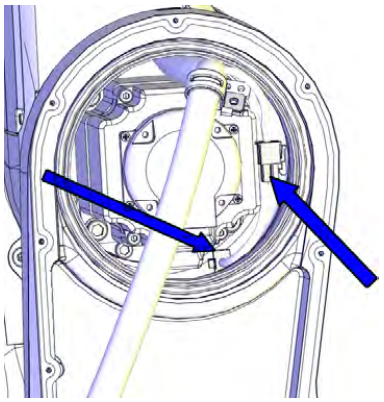 xx1300002434
13	Refit the axis-2 motor bracket to the cable package with the two screws. **CAUTION** Do not loosen the cable clamp screw! There is a risk of rearrangement of the cable layout which would result in shortened lifetime of the cable harness.	Tightening torque: 1.5 Nm. 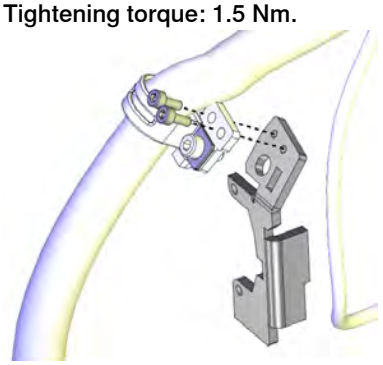 xx1400000021
14	Refit the axis-2 motor bracket to the motor.	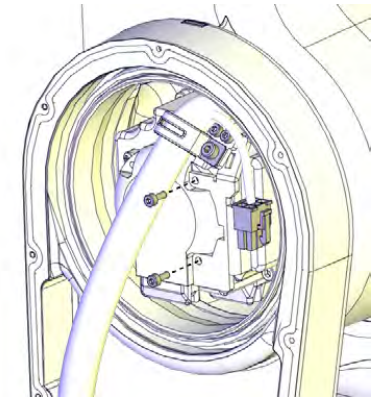 xx1300002432

Continues on next page

© Copyright 2014 - 2017 ABB. All rights reserved.

4.5.1 Replacing the base spare parts (base, axis-1 radial sealing, protection sleeve)

Continued

	Action	Note
15	Secure the connector R2.MP2 and its cable with cable straps onto the motor bracket. Make sure the connector is fixed by its tab to the bracket.	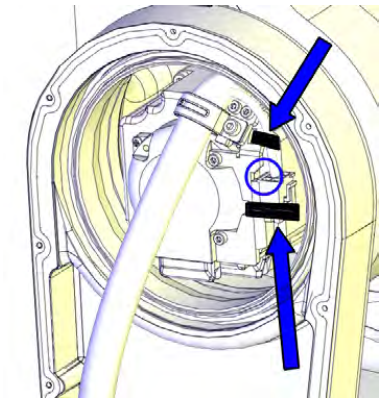 xx1400001529
16	Apply grease to the cable package, cover all moving area of the package.	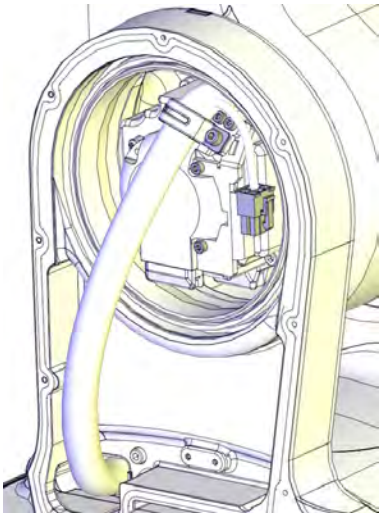 xx1400000482
17	In order to keep the cabling away from the hot axis-2 motor, the cable package must be secured accordingly inside the EIB/SMB cavity: 1 The cable package is strapped with tape by the supplier at two locations. Put a cable strap around the cable package at each location. 2 Insert a third cable strap through the top strap and the bottom strap, and close the strap to secure the cable package and keep it in place. See the figure.	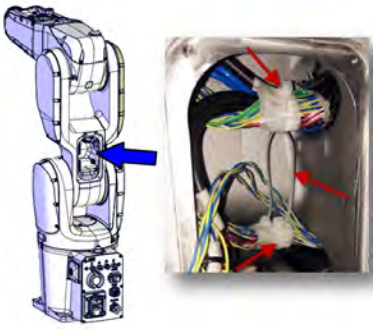 xx1400001131

Continues on next page

© Copyright 2014 - 2017 ABB. All rights reserved.

	Action	Note
18	**For robots with protection class IP67 (option 287-10)** **For robots with protection type Foundry Plus (option 287-3)** **For robots with with protection type Clean Room** **For robots with food grade lubrication** Check the gasket of the cable housing cover. Replace if damaged.	Gasket on cable housing cover: 3HAC056726-001 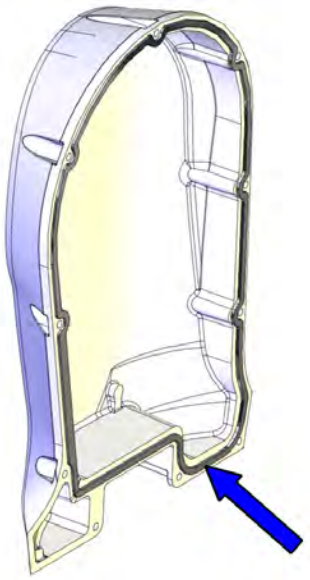 xx1400000424
19	Check the PTFE film. Replace if damaged.	PTFE film on cable housing cover: 3HAC044660-001
20	Apply grease to the inner surface of the cable housing cover and to the PTFE film surface.	

Continues on next page

© Copyright 2014 - 2017 ABB. All rights reserved.

4.5.1 Replacing the base spare parts (base, axis-1 radial sealing, protection sleeve)

Continued

	Action	Note
21	Refit the cable housing cover. Replace if damaged. **Note** Remember to refit the two lower screws shown in the figure.	Cable housing cover of the swing: 3HAC059678-001 : 3HAC056214-001 (used with protection type Clean Room) Cable housing cover of the swing, Clean Room Cable housing cover of the swing, food grade lubrication Screws: 3HAB3409-207 (M3x8). Tightening torque: 1.5 Nm. 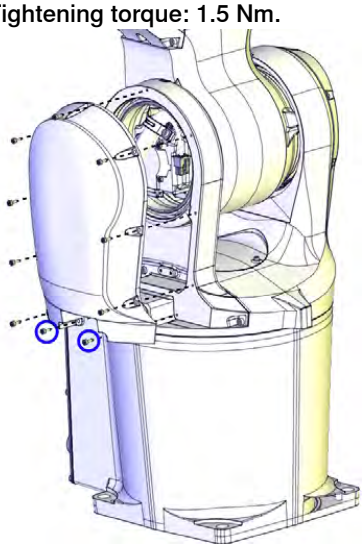 xx1300002431 **Note** Only use specified screws, never replace them with other screws.
22	**For robots with protection type Foundry Plus (option 287-3)** Check the protection plugs for lifting holes. Replace if damaged.	Protection plug for lifting holes: 3HAC4836-24 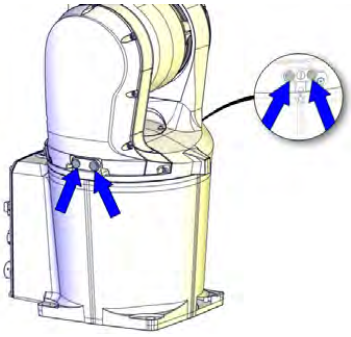 xx1600001151

Continues on next page

© Copyright 2014 - 2017 ABB. All rights reserved.

	Action	Note
23	**For robots with with protection type Clean Room** **For robots with food grade lubrication** Refit the swing sealing plug. Follow the procedure specified in *Refitting the swing sealing plug on page 145*.	Swing sealing plug:3HAC053687-001 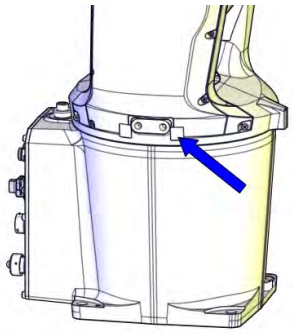 xx1600000205
24	Refit the lower arm bracket to the cable package. **CAUTION** Do not loosen the cable clamp screw! There is a risk of rearrangement of the cable layout which would result in shortened lifetime of the cable harness.	Tightening torque: 1.5 Nm. 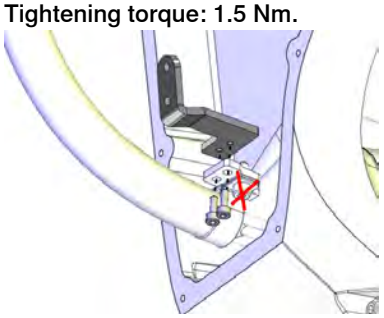 xx1300002430
25	Clean Room robots: seal and paint the joints that have been opened. See *Replacing parts on the robot on page 138* **Note** After all repair work, wipe the robot free from particles with spirit on a lint free cloth.	

Connecting the cabling in the lower arm

	Action	Note
1	**ELECTROSTATIC DISCHARGE (ESD)** The unit is sensitive to ESD. Before handling the unit please read the safety information in the section *WARNING - The unit is sensitive to ESD! on page 50*	
2	Clean Room robots: clean the joints that have been opened. See *Replacing parts on the robot on page 138*	

Continues on next page

© Copyright 2014 - 2017 ABB. All rights reserved.

4.5.1 Replacing the base spare parts (base, axis-1 radial sealing, protection sleeve)
Continued

	Action	Note
3	**For robots with protection class IP67 (option 287-10)** **For robots with protection type Foundry Plus (option 287-3)** **For robots with with protection type Clean Room** **For robots with food grade lubrication** Check the EIB/SMB cover gasket. Replace if damaged.	Gasket on EIB/SMB cover: 3HAC056728-001 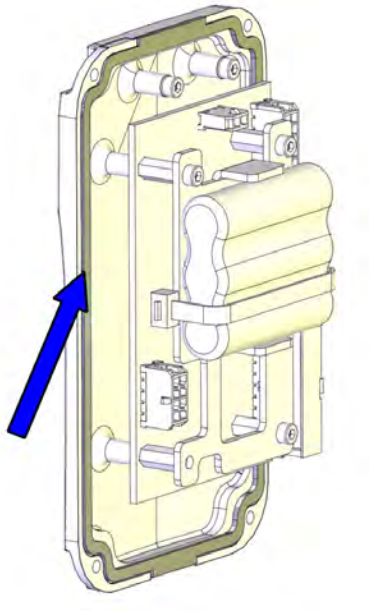 xx1400000475
4	**Valid for IRB 1200 (no type specified) and IRB 1200 Type A** Connect the connectors to the EIB unit. • R1.ME1-3 • R1.ME4-6 • R2.EIB **WARNING** Make sure not to mix the R2.EIB and R2.ME2. Axis 2 may be severely damaged. See the labels on the connectors for correct connection.	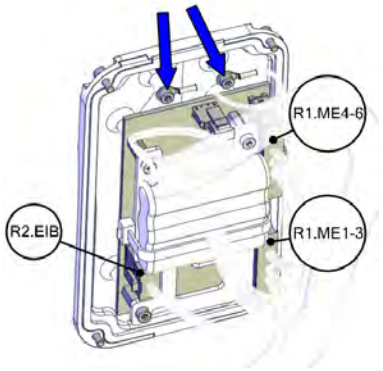 xx1300002428
5	**Valid for IRB 1200 (no type specified) and IRB 1200 Type A** Connect the lugs to the EIB/SMB cover.	
6	**Valid for IRB 1200 Type B** Connect the connectors to the SMB unit. • R1.ME1,2,4,5 • R1.ME3,6 • R2.SMB **WARNING** Make sure not to mix the R2.SMB and R2.ME2. Axis 2 may be severely damaged. See the labels on the connectors for correct connection.	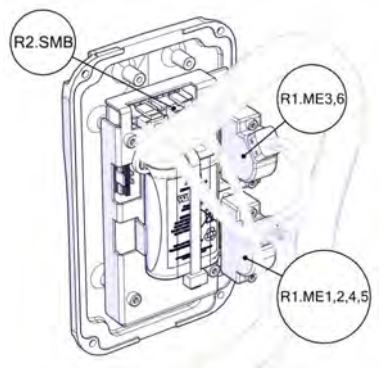 xx1700000005

Continues on next page

© Copyright 2014 - 2017 ABB. All rights reserved.

	Action	Note
7	**Valid for IRB 1200 Type B** Tighten the connector screws.	Tightening torque: 0.3 Nm 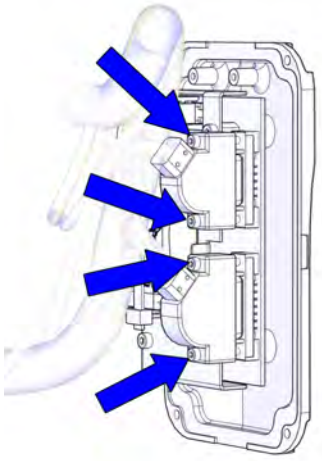 xx1700000004
8	Refit the EIB/SMB cover to the lower arm with the attachment screws.	Screws: 3HAB3409-207 (M3x8). Tightening torque: 1.5 Nm 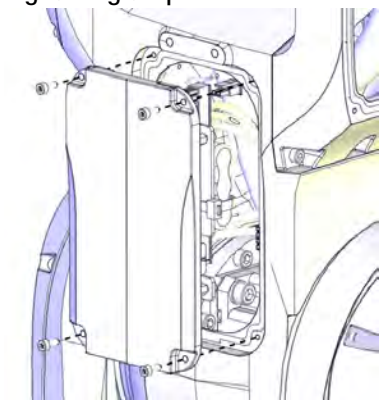 xx1300002427 **Note** Only use specified screws, never replace them with other screws.

Continues on next page

© Copyright 2014 - 2017 ABB. All rights reserved.

4.5.1 Replacing the base spare parts (base, axis-1 radial sealing, protection sleeve)
Continued

	Action	Note
9	Refit the fix sheet attachment screws in the lower arm.	Tightening torque: 1.5 Nm. 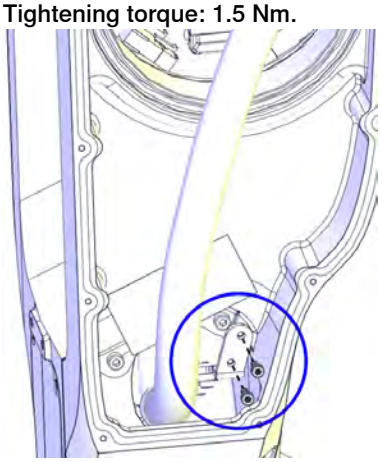 xx1300002426
10	Clean Room robots: seal and paint the joints that have been opened. See *Replacing parts on the robot on page 138* **Note** After all repair work, wipe the robot free from particles with spirit on a lint free cloth.	

Refitting the cable package in the housing

	Action	Note
1	Clean Room robots: clean the joints that have been opened. See *Replacing parts on the robot on page 138*	
2	Before guiding the cable package into the housing and upper arm, apply grease to the cable package, to the area going into the upper arm, shown in the figure. Cover all moving area of the package.	Area to be lubricated, shown in cable package already fitted to the housing. 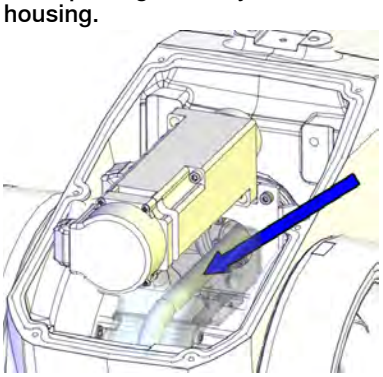 xx1400000483

Continues on next page

© Copyright 2014 - 2017 ABB. All rights reserved.

	Action	Note
3	Guide the cable package into the upper arm, through the housing. **Note** Guide the air hoses (A) underneath the bottom side of the axis-3 motor and the axis-3 motor cables (B) on top of the motor, see cable layout figure. The fix point of the air hoses is pre-determined (marked) and must be matched against the air hose holder on the left side of the axis-3 motor. **Note** The air hose holder keeps the air hoses arranged in an optimized way. It is necessary to keep the air hose holder vertically and firmly against the left side of the axis-3 motor.	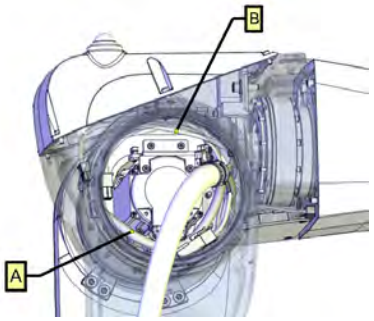 xx1400001472
4	Refit the bracket to the sheet with two screws. **CAUTION** Do not loosen the cable clamp screw! There is a risk of rearrangement of the cable layout which would result in shortened lifetime of the cable harness.	Tightening torque: 1.5 Nm. 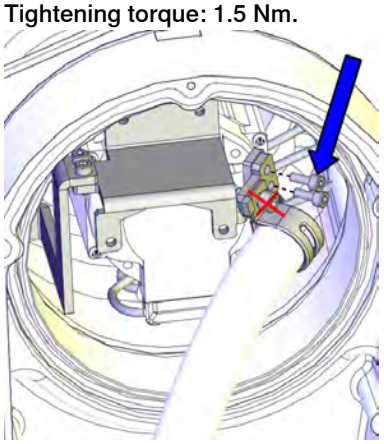 xx1300002424
5	Refit the fix sheet to the motor.	Tightening torque: 1.5 Nm. 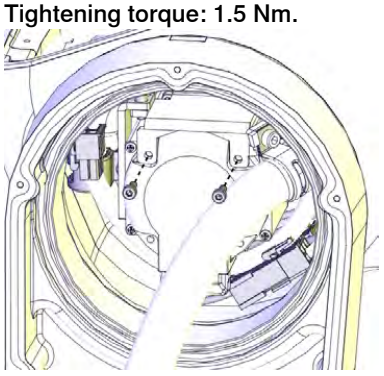 xx1300002423

Continues on next page

© Copyright 2014 - 2017 ABB. All rights reserved.

4.5.1 Replacing the base spare parts (base, axis-1 radial sealing, protection sleeve)

Continued

	Action	Note
6	Refit the fix sheet to the inner plastic guide.	Tightening torque: 1.5 Nm. 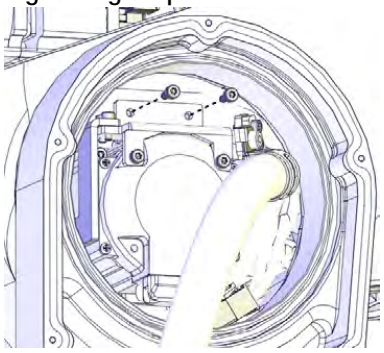 xx1300002421
7	Fit the air hose holder to the bracket. Replace the holder, if damaged. **Tip** If the air hose holder is difficult to fit, firstly remove the bracket from the fix sheet by removing the two M3 screws. Fit the holder to the bracket and then refit the complete assembly to the fix sheet again. Tightening torque for the two M3 screws: 1.5 Nm. 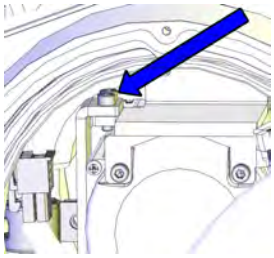 xx1400001133	Air hose holders are included in Cable harness material set (3HAC049663-001). Tightening torque: 4 Nm. 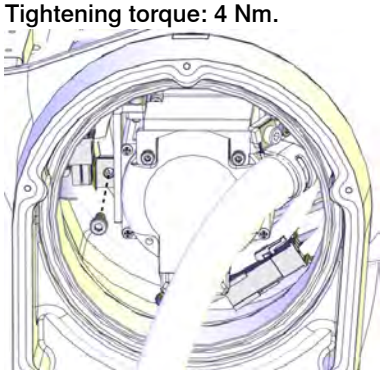 xx1300002422
8	Reconnect the axis-3 motor connectors.	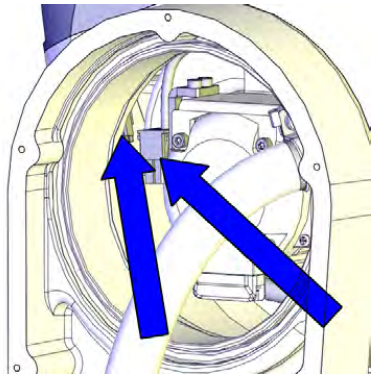 xx1300002420

Continues on next page

© Copyright 2014 - 2017 ABB. All rights reserved.

	Action	Note
9	Apply grease to the cable package, cover all moving area of the package.	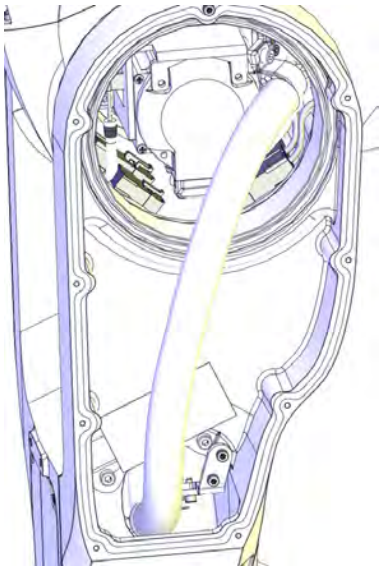 xx1400000754
10	**Valid for IRB 1200-5/0.9** Secure the cable package at the bottom of the housing with cable straps.	
11	Clean Room robots: seal and paint the joints that have been opened. See *Replacing parts on the robot on page 138* **Note** After all repair work, wipe the robot free from particles with spirit on a lint free cloth.	

Connecting the axis-4 motor connectors

	Action	Note
1	Reconnect the motor connectors.	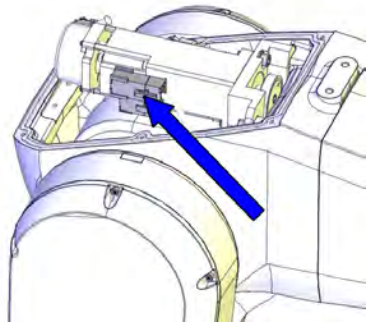 xx1300002371

Continues on next page

© Copyright 2014 - 2017 ABB. All rights reserved.

4.5.1 Replacing the base spare parts (base, axis-1 radial sealing, protection sleeve)

Continued

	Action	Note
2	Secure the connectors to the motor with a cable strap.	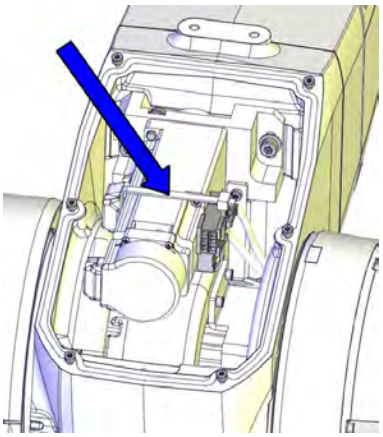 xx1300002494

Connecting the axis-4 FPC connectors

	Action	Note
1	Clean Room robots: clean the joints that have been opened. See *Replacing parts on the robot on page 138*	
2	Reconnect the FPC connectors.  **Tip** See the number markings on the connectors for help to find the corresponding connector.	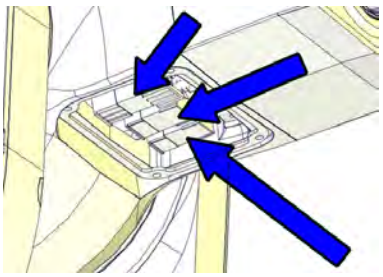 xx1300002399

Continues on next page

© Copyright 2014 - 2017 ABB. All rights reserved.

	Action	Note
3	Reconnect the FPC connectors and push them into place inside the housing. **Tip** See the number markings on the connectors for help to find the corresponding connector.	Cable layout in IRB 1200-7/0.7 : 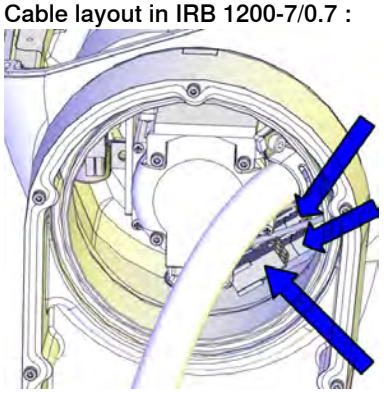 xx1300002412 Cable layout in IRB 1200-5/0.9 : 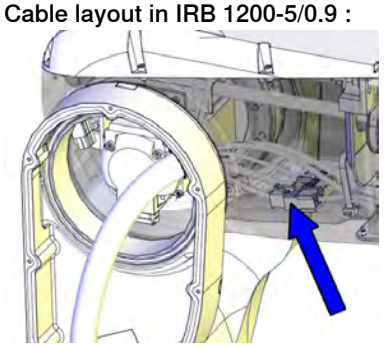 xx1400001471
4	Remove residual locking liquid and other pollutants with cleaning agent Loctite 7063.	

Continues on next page

© Copyright 2014 - 2017 ABB. All rights reserved.

4.5.1 Replacing the base spare parts (base, axis-1 radial sealing, protection sleeve)

Continued

	Action	Note
5	**For robots with protection class IP67 (option 287-10)** **For robots with protection type Foundry Plus (option 287-3)** Apply flange sealing Sikaflex 521FC on the mounting surfaces of the small cover on the housing.	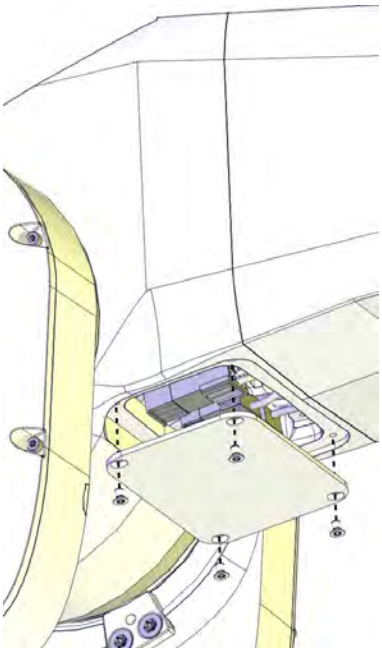 xx1300002398 Housing small cover: 3HAC059684-001 : 3HAC056142-001 (used with protection type Clean Room) Housing small cover, Clean Room Housing small cover, food grade lubrication Screws: 3HAC14286-4 (M3X5). Tightening torque: 1 Nm.
6	Refit the small cover to the housing. Replace if damaged.	
7	**For robots with protection type Clean Room** Apply a string of the sealant Sikaflex 521FC to the joint of the small cover on the housing. Smooth out the sealant string using a finger tip. Use washing-up on finger tips to get a smooth joint. If necessary, add extra sealant to get a full cover joint.	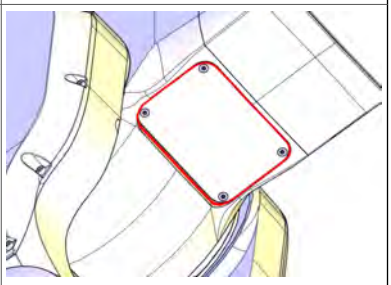 xx1600000214

Continues on next page

© Copyright 2014 - 2017 ABB. All rights reserved.

	Action	Note
8	Refit the plate.	Tightening torque: 1.5 Nm. 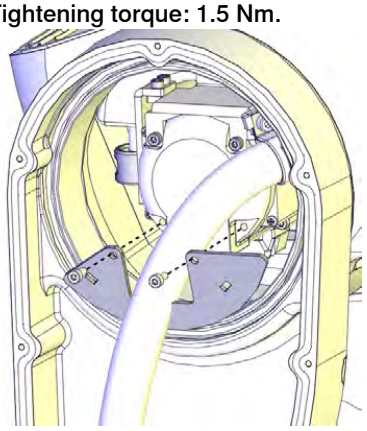 xx1300002413
9	Check the PTFE film on the cable housing. Replace if damaged.	PTFE film on lower arm cable housing: 3HAC044710-001 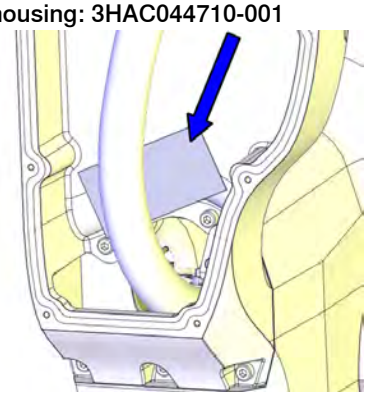 xx1400000740

Continues on next page

© Copyright 2014 - 2017 ABB. All rights reserved.

4.5.1 Replacing the base spare parts (base, axis-1 radial sealing, protection sleeve)
Continued

	Action	Note
10	**For robots with protection class IP67 (option 287-10)** **For robots with protection type Foundry Plus (option 287-3)** **For robots with with protection type Clean Room** **For robots with food grade lubrication** Check the gasket of the cable housing cover. Replace if damaged.	Gasket on cable housing cover: 3HAC056724-001 PTFE film on cable housing cover: 3HAC044660-001 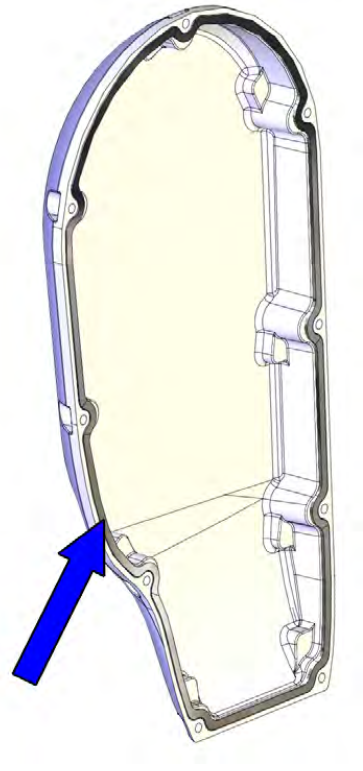 xx1400000048
11	Check the PTFE film on the cable housing cover. Replace if damaged.	
12	Apply grease to the inner surface of the cable housing cover and the PTFE film surface.	

Continues on next page

© Copyright 2014 - 2017 ABB. All rights reserved.

	Action	Note
13	Refit the cable housing cover.	Screws: 3HAB3409-207 (M3x8). Tightening torque: 1.5 Nm 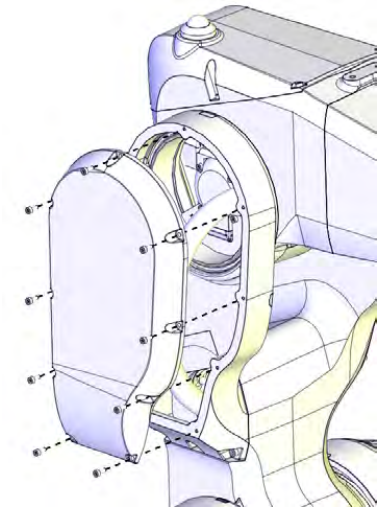 xx1300002400 **Note** Only use specified screws, never replace them with other screws.
14	Clean Room robots: seal and paint the joints that have been opened. See *Replacing parts on the robot on page 138* **Note** After all repair work, wipe the robot free from particles with spirit on a lint free cloth.	

Connecting the air hoses and CP/CS cabling (if equipped)

	Action	Note
1	Reconnect the air hoses.	Air connector set with Ethernet hole in flange: 3HAC049664-001 Air connector set without Ethernet hole in flange: 3HAC049665-001 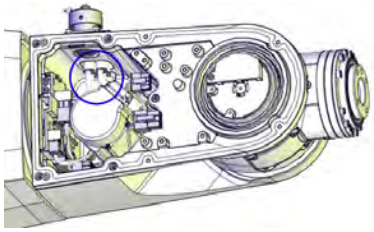 xx1400000738

Continues on next page

© Copyright 2014 - 2017 ABB. All rights reserved.

4.5.1 Replacing the base spare parts (base, axis-1 radial sealing, protection sleeve)
Continued

	Action	Note
2	If equipped, reconnect the CP/CS connector. **For robots with protection class IP67 (option 287-10)** **For robots with protection type Foundry Plus (option 287-3)** 1 Check the gasket. 2 Replace if damaged. **For robots with protection type Clean Room:** 1 Remove residual locking liquid and other pollutants with cleaning agent Loctite 7063. 2 Apply flange sealing Loctite 574 on the mounting surfaces of the CP/CS connector and wipe clean if there is any overflowing Loctite 574.	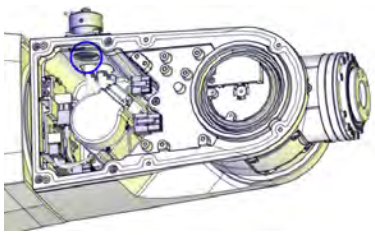 xx1500000252 On robots with protection class IP67 On robots with protection type Foundry Plus Gasket: 3HAC058567-001 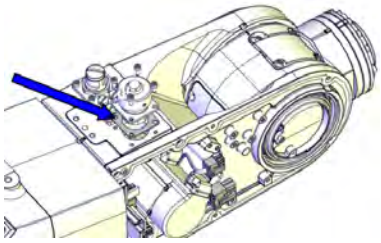 xx1500000251
3	**For robots with protection type Foundry Plus** If required, fit the protection bracket for CP/CS connectors.	Protection bracket for CP/CS connectors: 3HAC058350-001 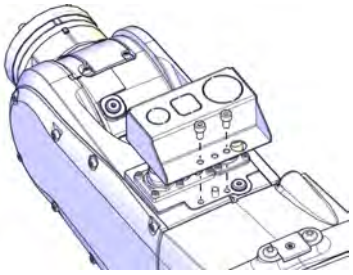 xx1600001152

Connecting the axis-5 motor FPC connectors

	Action	Note
1	Connect the axis-5 FPC connectors and snap them to their holders.	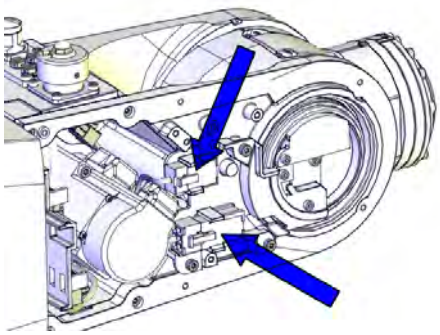 xx1300002390

Continues on next page

© Copyright 2014 - 2017 ABB. All rights reserved.

Connecting the axis-5 motor connectors

	Action	Note
1	Reconnect the motor cables. • R3.MP5 • R3.ME5	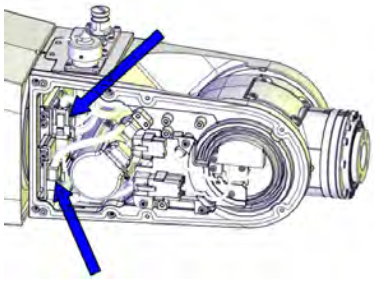 xx1300002360

Refitting the tubular cable housing cover

	Action	Note
1	Clean Room robots: clean the joints that have been opened. See *Replacing parts on the robot on page 138*	
2	**For robots with protection class IP67 (option 287-10)** **For robots with protection type Foundry Plus (option 287-3)** **For robots with with protection type Clean Room** **For robots with food grade lubrication** Check the tubular cable housing cover gasket. Replace if damaged.	Gasket for tubular cable housing cover: 3HAC056707-001 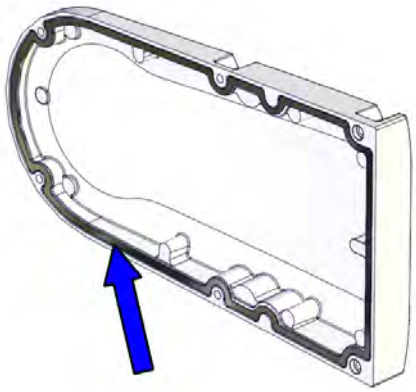 xx1400000345

Continues on next page

© Copyright 2014 - 2017 ABB. All rights reserved.

4.5.1 Replacing the base spare parts (base, axis-1 radial sealing, protection sleeve)
Continued

	Action	Note
3	Refit the cover to the cable housing.	Screws: 3HAB3409-207 (M3x8). Tightening torque: 1.5 Nm. 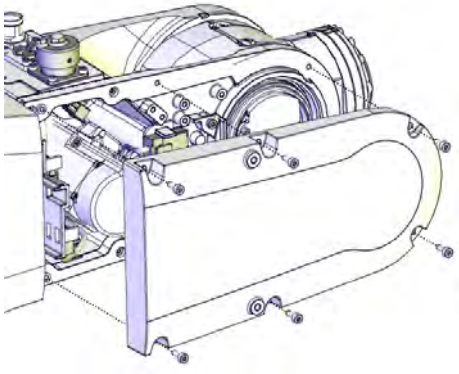 xx1300002389 **Note** Only use specified screws, never replace them with other screws.
4	Clean Room robots: seal and paint the joints that have been opened. See *Replacing parts on the robot on page 138* **Note** After all repair work, wipe the robot free from particles with spirit on a lint free cloth.	

Concluding procedure

	Action	Note
1	**For robots with protection class IP67 (option 287-10)** **For robots with protection type Foundry Plus (option 287-3)** **For robots with with protection type Clean Room** **For robots with food grade lubrication** Check the gasket. Replace if damaged.	Housing cover gasket (IRB 1200-7/0.7): 3HAC056698-001 Housing cover gasket (IRB 1200-5/0.9): 3HAC056697-001 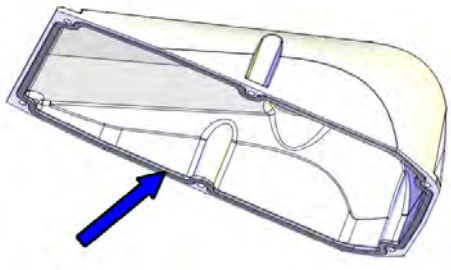 xx1400000477

Continues on next page

© Copyright 2014 - 2017 ABB. All rights reserved.

	Action	Note
2	Refit the upper arm housing cover with the screws. **CAUTION** **For robots with safety lamp (option)** Reconnect the lamp cable connectors R3.H1 and R3.H2 and then secure the cover.	Screws: 3HAB3409-207 (M3x8). Tightening torque: 1.5 Nm. 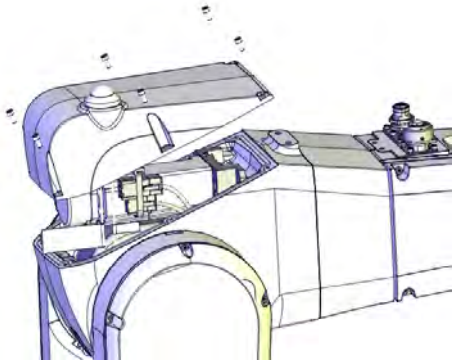 xx1300000456 **Note** Only use specified screws, never replace them with other screws.
3	**For robots with protection type Clean Room** Apply a string of the sealant Sikaflex 521FC to the joint of the upper arm housing cover. Smooth out the sealant string using a finger tip. Use washing-up on finger tips to get a smooth joint. If necessary, add extra sealant to get a full cover joint.	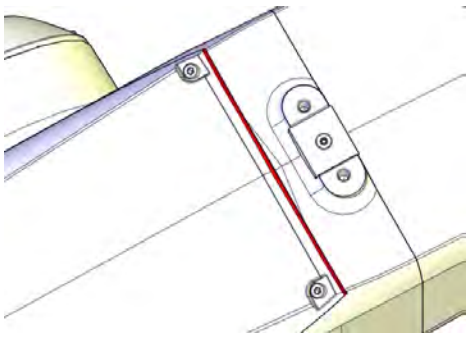 xx1600000215
4	For robots with protection type Clean Room: Clean and paint the joints that have been opened. See *Replacing parts on the robot on page 138* **Note** After all repair work, wipe the Clean Room robot free from particles with spirit on a lint free cloth.	
5	Recalibrate the robot.	Calibration information is included in section *Calibration on page 733*.
6	**DANGER** Make sure all safety requirements are met when performing the first test run. These are further detailed in the section *DANGER - First test run may cause injury or damage! on page 48*.	

© Copyright 2014 - 2017 ABB. All rights reserved.

4.5.2 Replacing the swing spare parts (swing, axis-2 radial sealing)

Location of the swing spare parts

The swing parts that are considered spare parts are located as shown in the figures.

Swing	Swing cover
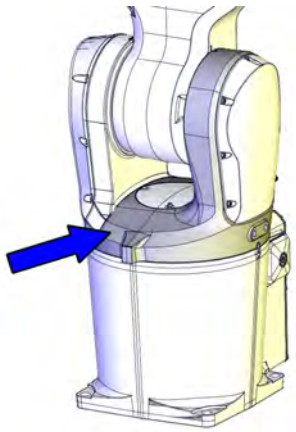 xx1400000442	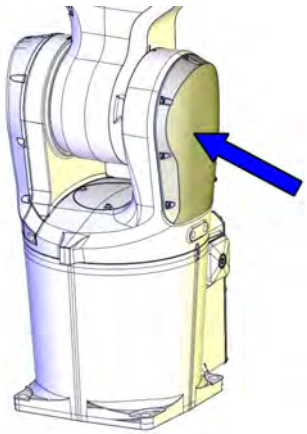 xx1400000443
3HAC059554-001	3HAC059676-001
3HAC059700-001 Used with protection type Clean Room. Used for robots with food grade lubrication.	3HAC056215-001 Used with protection type Clean Room. Used for robots with food grade lubrication. Replace if damaged.

Cable housing of the swing	Cable housing cover of the swing	Radial sealing with dust lip
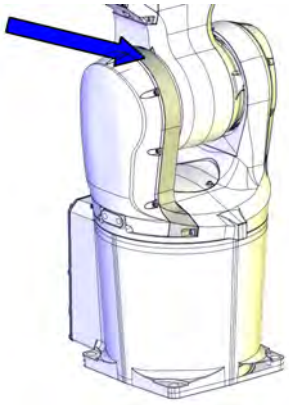 xx1400000446	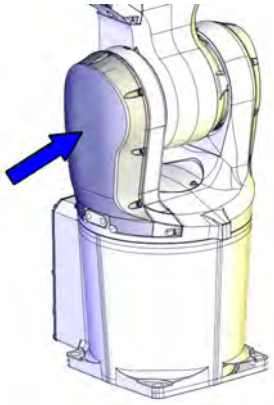 xx1400000445	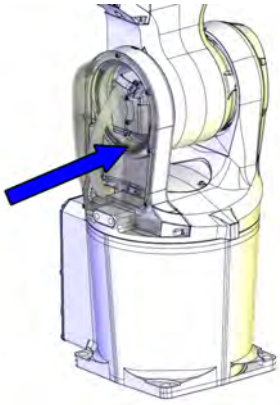 xx1400000444
3HAC059677-001	3HAC059678-001	3HAB3701-41
3HAC056213-001 Used with protection type Clean Room. Used for robots with food grade lubrication. Replace if damaged.	3HAC056214-001 Used with protection type Clean Room. Used for robots with food grade lubrication. Replace if damaged.	Not used with protection class IP40. Replace if damaged.

Continues on next page

© Copyright 2014 - 2017 ABB. All rights reserved.

Required spare parts

Note

The spare part numbers that are listed in the table can be out of date. See the latest revision of *Product manual, spare parts - IRB 1200* on ABB Library.

Spare part	Article number	Note
Swing	3HAC059554-001	If the swing 3HAC049632-001 or 3HAC058000-001 is previously installed on the robot, also a new sealing ring and, for IP67 and Foundry Plus, a gasket and a V-ring is required. See *Spare part versions for the swing on IP40/IP67 robots on page 795*.
Swing, Clean Room Swing, food grade lubrication	3HAC059700-001	Used with protection type Clean Room. Used for robots with food grade lubrication.
Axis-1 sealing ring	3HAC044676-001 / 3HAC058568-001 i	Replace if damaged.
Axis-1 sealing ring gasket	3HAC045685-001	Used with protection class IP67. Only on axis-1 sealing ring version 3HAC044676-001. See *Spare part versions for the axis-1 sealing ring on IP40/IP67 robots on page 797*. Replace if damaged.
Axis-1 sealing ring gasket	3HAC058349-001	Not used with protection class IP40. Only on axis-1 sealing ring version 3HAC058568-001. See *Spare part versions for the axis-1 sealing ring on IP40/IP67 robots on page 797*. Replace if damaged.
Sealing ring, gasket and V-ring	3HAC058001-001	Used with protection class IP67. Replace if damaged.
V-ring	3HAB3732-34	Used with protection class IP67. Used with protection type Foundry Plus. Only on swing version 3HAC058000-001 and 3HAC059554-001. See *Spare part versions for the swing on IP40/IP67 robots on page 795*. Replace if damaged.
Cable protection	3HAC044691-001	Replace if damaged.
Torx countersunk head screw M3x5	3HAC14286-4	Replace if damaged.
Cover on top of swing	3HAC059679-001	Replace if damaged.

Continues on next page

© Copyright 2014 - 2017 ABB. All rights reserved.

4.5.2 Replacing the swing spare parts (swing, axis-2 radial sealing)
Continued

Spare part	Article number	Note
Cover on top of swing, Clean Room Cover on top of swing, food grade lubrication	3HAC056133-001	Used with protection type Clean Room. Used for robots with food grade lubrication. Replace if damaged.
Gasket on top swing cover	3HAC056696-001	Not used with protection class IP40. Replace if damaged.
Swing cover	3HAC059676-001	Replace if damaged.
Swing cover, Clean Room Swing cover, food grade lubrication	3HAC056215-001	Used with protection type Clean Room. Used for robots with food grade lubrication. Replace if damaged.
Gasket on swing cover	3HAC056727-001	Not used with protection class IP40. Replace if damaged.
Radial sealing with dust lip	3HAB3701-41	Not used with protection class IP40. Replace if damaged.
Cable housing of the swing	3HAC059677-001	Replace if damaged.
Cable housing of the swing, Clean Room Cable housing of the swing, food grade lubrication	3HAC056213-001	Used with protection type Clean Room. Used for robots with food grade lubrication. Replace if damaged.
Cable housing cover of the swing	3HAC059678-001	Replace if damaged.
Cable housing cover of the swing, Clean Room Cable housing cover of the swing, food grade lubrication	3HAC056214-001	Used with protection type Clean Room. Used for robots with food grade lubrication. Replace if damaged.
Gasket on cable housing cover	3HAC056726-001	Not used for robots with protection class IP40. Replace if damaged.
Axis-2 sealing ring	3HAC044677-001	Replace if damaged.
M2 variseal sealing	3HAC044641-003	Used with protection class IP67. Used with protection type Foundry Plus. Replace if damaged.
O-ring	3HAC048939-001	Replace if damaged.
M2 variseal sealing	3HAC044641-004	Used with protection class IP67. Used with protection type Foundry Plus. Replace if damaged.

Continues on next page

© Copyright 2014 - 2017 ABB. All rights reserved.

Spare part	Article number	Note
Cable harness material set	3HAC049663-001	Includes brackets, sheets, distance screws, plastics, cable clamp, seal bolts and air protection in tubular.
Gasket on cable housing cover	3HAC056724-001	Not used with protection class IP40. Replace if damaged.
Gasket for tubular cable housing cover	3HAC056707-001	Not used with protection class IP40. Replace if damaged.
Housing cover gasket (IRB 1200-7/0.7)	3HAC056698-001	Not used with protection class IP40. Replace if damaged.
Housing cover gasket (IRB 1200-5/0.9)	3HAC056697-001	Not used with protection class IP40. Replace if damaged.

i For information on which sealing ring to be ordered, see *Spare part versions for the axis-1 sealing ring on IP40/IP67 robots on page 797*.

Required tools and equipment

Equipment, etc.	Article number	Note
Roundsling, 2 m	-	Length: 2 m. Lifting capacity: 100 kg.
Axis-2 sealing assembly tool set	3HAC049694-001	Used to refit the radial sealing, if replacement is needed.
Guide pin for axis-1 gear unit	3HAC049703-001	Always use three guide pins together!
Guide pin for axis-2 gear unit	3HAC049704-001	Always use three guide pins together!
24 VDC power supply	-	Used to release the motor brakes.
Calibration toolkit, manual calibration	3HAC051256-001	Includes calibration tools, pins and attachment screws for manual calibration method. i
Standard toolkit	-	Content is defined in section *Standard toolkit on page 808*.

i The robot is calibrated by either manual calibration or Axis Calibration at factory. Always use the same calibration method as used at the factory.

Information about valid calibration method is found on the calibration label or in the calibration menu on the FlexPendant.

If no data is found related to standard calibration, manual calibration is used as default.

Required consumables

Consumable	Art. no.	Note
Cable straps	-	
Locking liquid	3HAB7116-1	Loctite 243
Cleaning agent	-	Loctite 7063
Flange sealing	12340011-116	Loctite 574

Continues on next page

© Copyright 2014 - 2017 ABB. All rights reserved.

4.5.2 Replacing the swing spare parts (swing, axis-2 radial sealing)
Continued

Consumable	Art. no.	Note
Sealant	3HAC026759-001	Sikaflex 521FC For robots with protection class IP67 (option 287-10) For robots with protection type Clean Room For robots with protection type Foundry Plus (option 287-3)

Deciding calibration routine

Decide which calibration routine to be used, based on the information in the table. Depending on which routine is chosen, action might be required prior to beginning the repair work of the robot, see the table.

	Action	Note
1	Decide which calibration routine to use for calibrating the robot. • Reference calibration. External cable packages (DressPack) and tools can stay fitted on the robot. • Fine calibration. All external cable packages (DressPack) and tools must be removed from the robot.	**Note** Calibrating axis 6 always requires tools to be removed from the mounting flange (also for reference calibration) since the mounting flange is used for installation of the calibration tool.
	If the robot is to be calibrated with reference calibration: Find previous reference values for the axis or create new reference values. These values are to be used after the repair procedure is completed, for calibration of the robot. If no previous reference values exist, and no new reference values can be created, then reference calibration is not possible.	Follow the instructions given in the reference calibration routine on the FlexPendant to create reference values. Creating new values requires possibility to move the robot. Read more about reference calibration for Axis Calibration in *Reference calibration routine on page 743*.
	If the robot is to be calibrated with fine calibration: Remove all external cable packages (DressPack) and tools from the robot.	

Removing the swing parts

Use these procedures to remove the swing spare parts.

Preparations before removing the swing spare parts

	Action	Note
1	Decide which calibration routine to use, and take actions accordingly prior to beginning the repair procedure.	

Continues on next page

© Copyright 2014 - 2017 ABB. All rights reserved.

	Action	Note
2	Jog all axes to zero position.	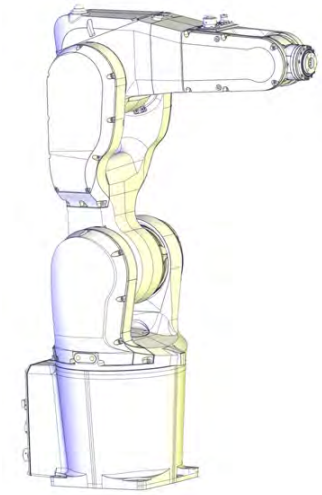 xx1300002581
3	**DANGER** Turn off all: • electric power supply • hydraulic pressure supply • air pressure supply to the robot, before entering the robot working area.	
4	**CAUTION** For robots with protection type Clean Room: Always cut the paint with a knife and grind the paint edge when disassembling parts of the robot! See *Replacing parts on the robot on page 138*	
5	Remove the wrist cover.	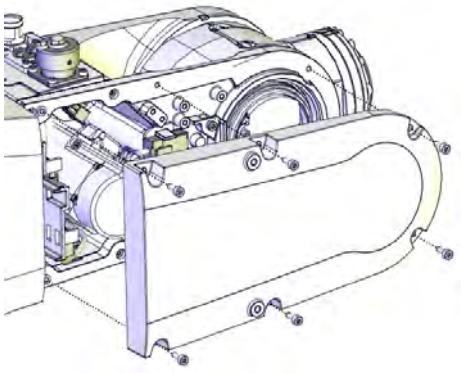 xx1300002389

Continues on next page

© Copyright 2014 - 2017 ABB. All rights reserved.

4.5.2 Replacing the swing spare parts (swing, axis-2 radial sealing)

Continued

Disconnecting the axis-5 motor connectors

	Action	Note
1	**DANGER** Make sure that all supplies for electrical power, hydraulic pressure, and air pressure are turned off.	
2	Snap loose the motor connectors from their holders and then disconnect them. • R3.MP5 • R3.ME5 **Tip** Take photos of the connector and cable position before disconnecting them, to have as a reference when reconnecting.	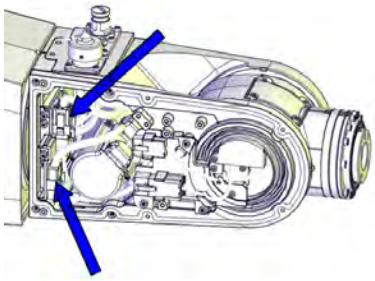 xx1300002360

Disconnecting the axis-5 FPC connectors

	Action	Note
1	**DANGER** Make sure that all supplies for electrical power, hydraulic pressure, and air pressure are turned off.	
2	Snap loose and disconnect the axis-5 FPC connectors.	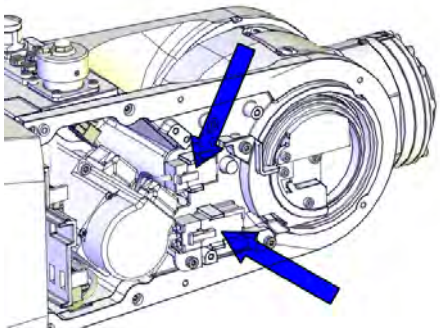 xx1300002390

Disconnecting the air hoses

	Action	Note
1	**DANGER** Make sure that all supplies for electrical power, hydraulic pressure, and air pressure are turned off.	

Continues on next page

© Copyright 2014 - 2017 ABB. All rights reserved.

	Action	Note
2	Disconnect the air hoses.	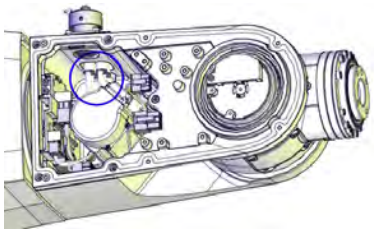 xx1400000738

Disconnecting the axis-4 FPC connectors

	Action	Note
1	**DANGER** Make sure that all supplies for electrical power, hydraulic pressure, and air pressure are turned off.	
2	**CAUTION** For robots with protection type Clean Room: Always cut the paint with a knife and grind the paint edge when disassembling parts of the robot! See *Replacing parts on the robot on page 138*	
3	Remove the cable housing cover.	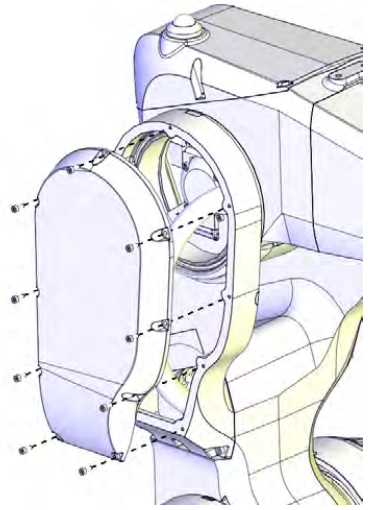 xx1300002400

Continues on next page

© Copyright 2014 - 2017 ABB. All rights reserved.

4.5.2 Replacing the swing spare parts (swing, axis-2 radial sealing)

Continued

	Action	Note
4	Remove the plate.	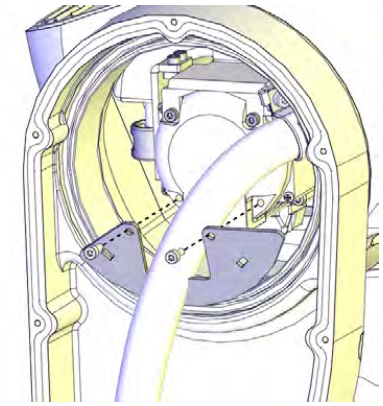 xx1300002413
5	Pull out the FPC connectors from the housing and disconnect them.	Cable layout in IRB 1200-7/0.7 : 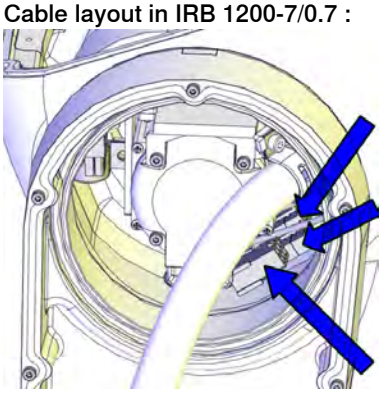 xx1300002412 Cable layout in IRB 1200-5/0.9 : 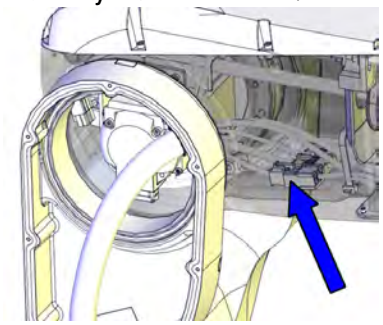 xx1400001471

Continues on next page

© Copyright 2014 - 2017 ABB. All rights reserved.

	Action	Note
6	Remove the small cover of the housing.	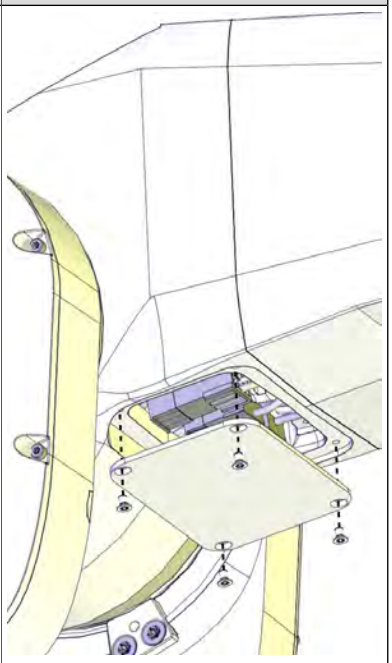 xx1300002398
7	Disconnect the remaining FPC connectors.	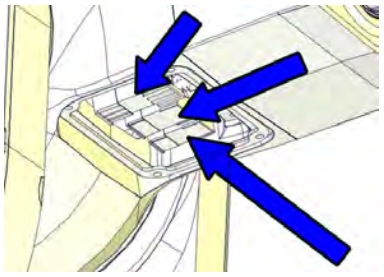 xx1300002399

Disconnecting the axis-4 motor connectors

	Action	Note
1	**DANGER** Make sure that all supplies for electrical power, hydraulic pressure, and air pressure are turned off.	
2	**CAUTION** For robots with protection type Clean Room: Always cut the paint with a knife and grind the paint edge when disassembling parts of the robot! See *Replacing parts on the robot on page 138*	

Continues on next page

© Copyright 2014 - 2017 ABB. All rights reserved.

4.5.2 Replacing the swing spare parts (swing, axis-2 radial sealing)
Continued

	Action	Note
3	Remove the cover from the upper arm housing. **CAUTION** **For robots with safety lamp (option)** Be aware of the signal lamp cables that are attached inside the housing! Disconnect the lamp cable connectors R3.H1 and R3.H2 and then lift away the cover completely.	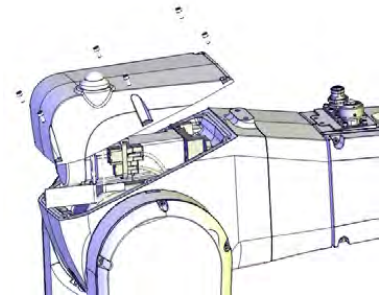 xx1300000456
4	Cut the strap that holds the connectors.	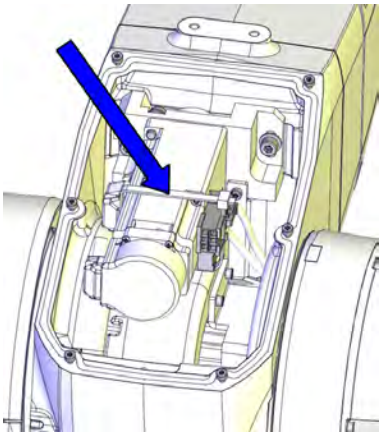 xx1300002494
5	Disconnect the motor connectors. **Tip** Take photos of the connector and cable position before disconnecting them, to have as a reference when reconnecting.	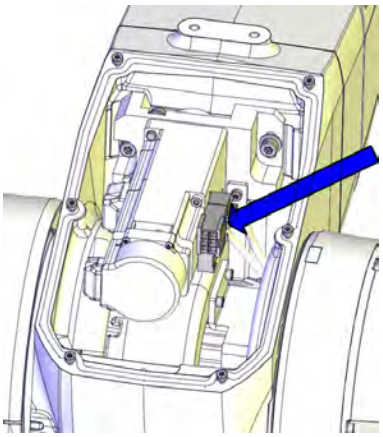 xx1300002495

Disconnecting the axis-3 motor connectors

	Action	Note
1	**DANGER** Make sure that all supplies for electrical power, hydraulic pressure, and air pressure are turned off.	

Continues on next page

© Copyright 2014 - 2017 ABB. All rights reserved.

	Action	Note
2	Pull out the axis-3 motor connectors from the housing and disconnect them.	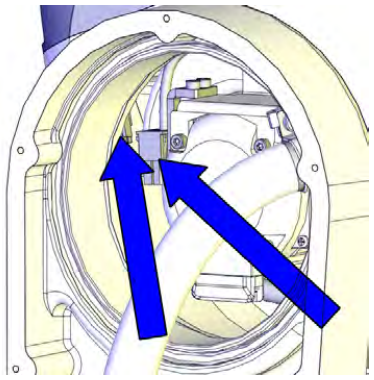 xx1300002420

Removing the cable package in the housing

	Action	Note
1	**DANGER** Make sure that all supplies for electrical power, hydraulic pressure, and air pressure are turned off.	
2	Remove the screw that fastens the air hose holder.	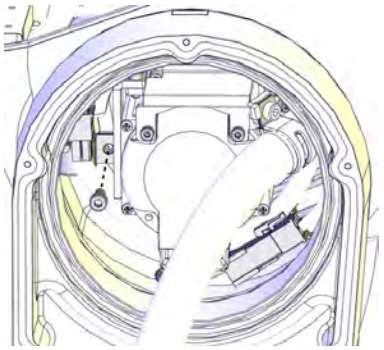 xx1300002422
3	Remove the screws that fasten the fix sheet to the inner plastic guide.	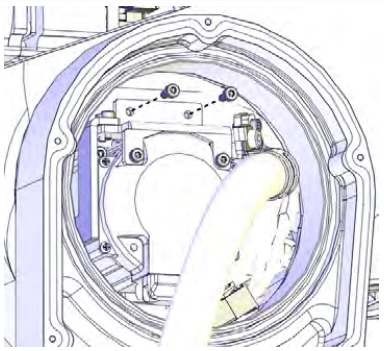 xx1300002421

Continues on next page

© Copyright 2014 - 2017 ABB. All rights reserved.

4.5.2 Replacing the swing spare parts (swing, axis-2 radial sealing)
Continued

	Action	Note
4	Remove the screws that fasten the fix sheet to the motor.	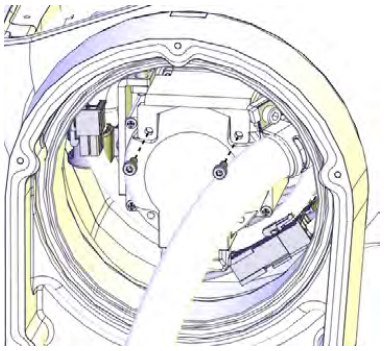 xx1300002423
5	Pull out the fix sheet a bit, to access the screws that fasten the cable bracket to the sheet. Loosen the bracket from the sheet by removing the two screws. **CAUTION** Do not loosen the cable clamp screw! There is a risk of rearrangement of the cable layout which would result in shortened lifetime of the cable harness.	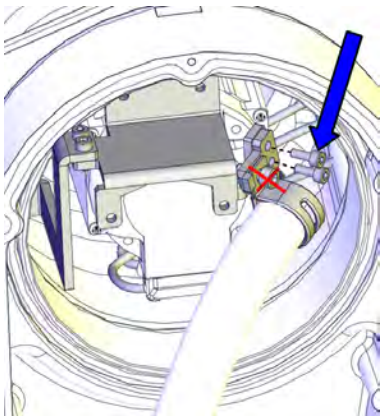 xx1300002424
6	**Valid for IRB 1200-5/0.9** Cut the cable straps at the bottom of the housing.	

Disconnecting the cabling in the lower arm

	Action	Note
1	**DANGER** Make sure that all supplies for electrical power, hydraulic pressure, and air pressure are turned off.	
2	**ELECTROSTATIC DISCHARGE (ESD)** The unit is sensitive to ESD. Before handling the unit please read the safety information in the section *WARNING - The unit is sensitive to ESD! on page 50*	
3	**CAUTION** For robots with protection type Clean Room: Always cut the paint with a knife and grind the paint edge when disassembling parts of the robot! See *Replacing parts on the robot on page 138*	

Continues on next page

© Copyright 2014 - 2017 ABB. All rights reserved.

	Action	Note
4	Remove the EIB/SMB cover attachment screws on the lower arm and carefully open the cover. **CAUTION** Be aware of the cabling that is attached to the cover! The cover can not be removed completely until the connectors and lugs are disconnected, as shown in following step.	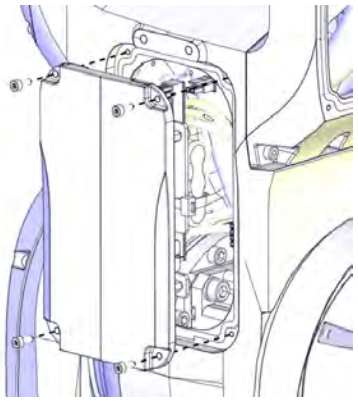 xx1300002427
5	**Valid for IRB 1200 (no type specified) and IRB 1200 Type A** Disconnect the connectors on the EIB unit. • R1.ME1-3 • R1.ME4-6 • R2.EIB Remove the EIB/SMB cover completely from the lower arm.	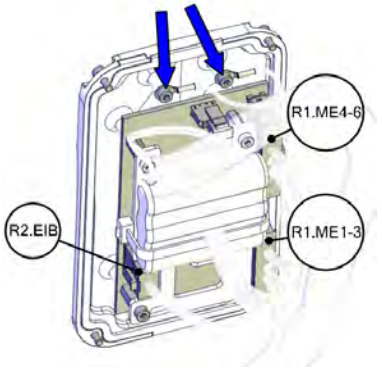 xx1300002428
6	**Valid for IRB 1200 (no type specified) and IRB 1200 Type A** Disconnect the lugs on the EIB/SMB cover.	
7	**Valid for IRB 1200 Type B** Loose the connector screws.	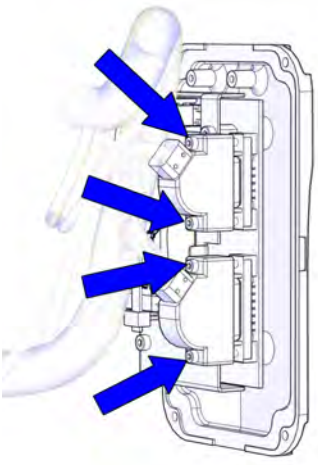 xx1700000004

Continues on next page

© Copyright 2014 - 2017 ABB. All rights reserved.

4.5.2 Replacing the swing spare parts (swing, axis-2 radial sealing)
Continued

	Action	Note
8	**Valid for IRB 1200 Type B** Disconnect the connectors on the SMB unit. • R1.ME1,2,4,5 • R1.ME3,6 • R2.SMB Remove the EIB/SMB cover completely from the lower arm.	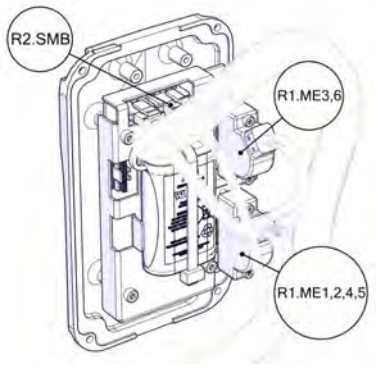 xx1700000005

Removing the cable package in the lower arm

	Action	Note
1	**DANGER** Make sure that all supplies for electrical power, hydraulic pressure, and air pressure are turned off.	
2	**CAUTION** For robots with protection type Clean Room: Always cut the paint with a knife and grind the paint edge when disassembling parts of the robot! See *Replacing parts on the robot on page 138*	
3	Pull the cable package out from the upper arm housing.	
4	Remove the fix sheet attachment screws in the lower arm.	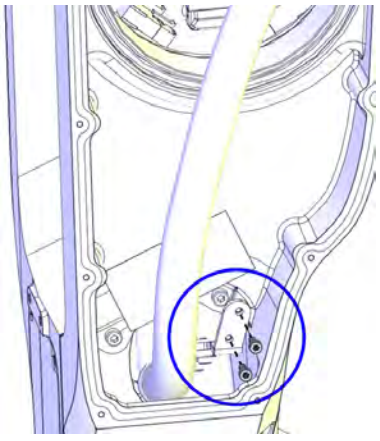 xx1300002426

Continues on next page

© Copyright 2014 - 2017 ABB. All rights reserved.

	Action	Note
5	Pull out the cable package a bit from the lower arm and remove the bracket from the cable package by removing the screws. **CAUTION** Do not loosen the cable clamp screw! There is a risk of rearrangement of the cable layout which would result in shortened lifetime of the cable harness.	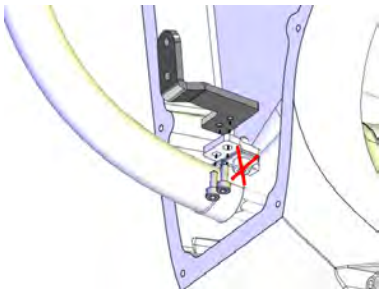 xx1300002430
6	Cut the cable strap that holds the cabling together inside the EIB/SMB cavity.	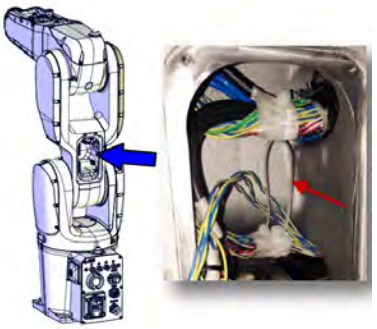 xx1400001130
7	**For robots with protection type Clean Room** Remove the swing sealing plug. Follow the procedure specified in *Removing the swing sealing plug on page 144*.	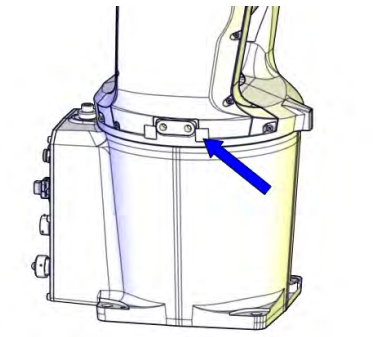 xx1600000205
8	Remove the swing cable housing cover by removing the screws.	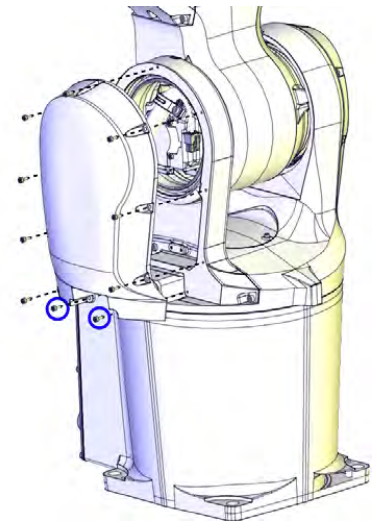 xx1300002431

Continues on next page

© Copyright 2014 - 2017 ABB. All rights reserved.

4.5.2 Replacing the swing spare parts (swing, axis-2 radial sealing)

Continued

	Action	Note
9	Cut the cable straps.	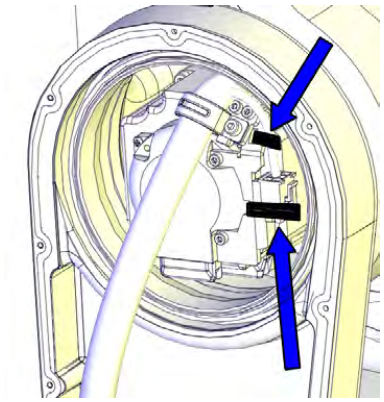 xx1400001528
10	Remove the axis-2 motor bracket screws.	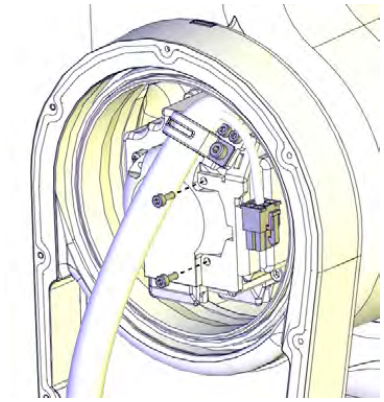 xx1300002432
11	Pull out the cabling and then remove the axis-2 motor bracket from the cable package by removing the screws. **CAUTION** Do not loosen the cable clamp screw! There is a risk of rearrangement of the cable layout which would result in shortened lifetime of the cable harness.	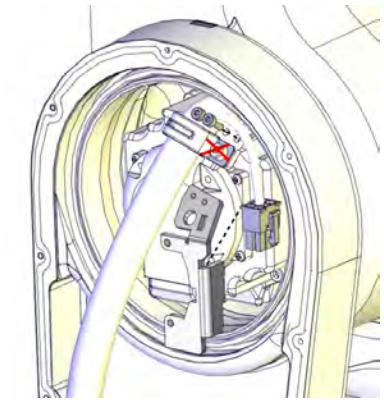 xx1300002433

Continues on next page

© Copyright 2014 - 2017 ABB. All rights reserved.

	Action	Note
12	Disconnect the motor connectors. • R2.ME2 • R2.MP2	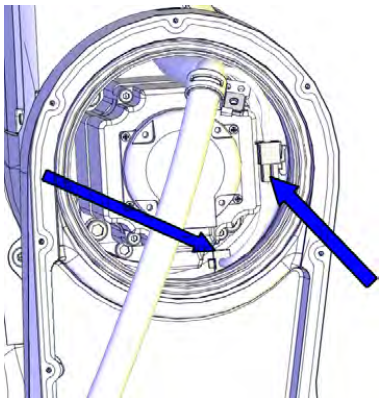 xx1300002434
13	Loosen the cable housing from the swing by removing the screws. Leave it hanging on the cable package.	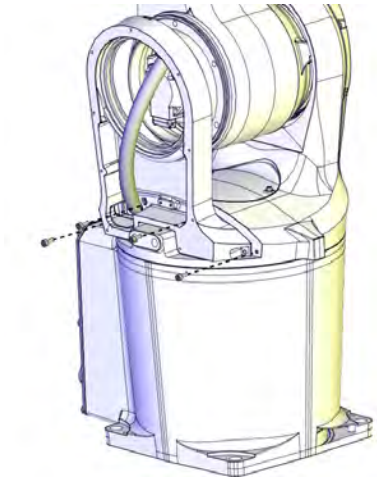 xx1300002435
14	Remove the axis-2 sealing ring by removing the screws.	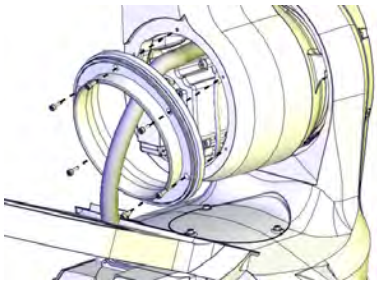 xx1400000020
15	Pull out the cable package from the lower arm. **Tip** There is a groove on the lower arm casting that simplifies cable passage, if needed. Its position can easily be felt by hand.	

Continues on next page

© Copyright 2014 - 2017 ABB. All rights reserved.

4.5.2 Replacing the swing spare parts (swing, axis-2 radial sealing)

Continued

	Action	Note
16	Loosen the plastic plate from the cable housing in order to facilitate continued removal of the cable package .	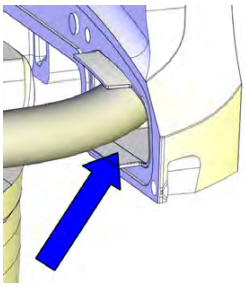 xx1400000023

Fitting lifting equipment to the upper and lower arm

	Action	Note
1	**CAUTION** The lower and upper arms together weigh 30 kg. All lifting accessories used must be sized accordingly!	
2	Clean Room robots: clean the joints that have been opened. See *Replacing parts on the robot on page 138*	
3	Fit lifting slings to the upper and lower arm.	Roundsling, 2 m
4	Clean Room robots: seal and paint the joints that have been opened. See *Replacing parts on the robot on page 138* **Note** After all repair work, wipe the robot free from particles with spirit on a lint free cloth.	

Removing the lower arm

	Action	Note
1	**DANGER** Make sure that all supplies for electrical power, hydraulic pressure, and air pressure are turned off.	
2	**CAUTION** For robots with protection type Clean Room: Always cut the paint with a knife and grind the paint edge when disassembling parts of the robot! See *Replacing parts on the robot on page 138*	

Continues on next page

© Copyright 2014 - 2017 ABB. All rights reserved.

	Action	Note
3	Remove the swing cover.	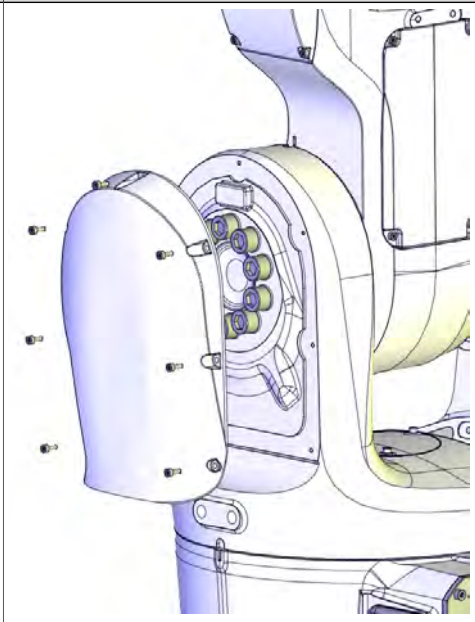 xx1300002551
4	Remove the lower arm screws and washers. **WARNING** This releases the lower arm from the swing. Make sure the weight of the arm is properly secured. The lower arm weighs 13 kg. If the upper arm is also attached to the lower arm, it adds an additional 17 kg to the total weight.	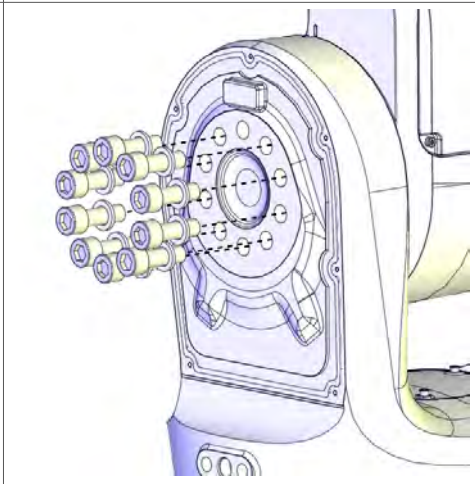 xx1300002552

Continues on next page

© Copyright 2014 - 2017 ABB. All rights reserved.

4.5.2 Replacing the swing spare parts (swing, axis-2 radial sealing)
Continued

	Action	Note
5	Fit guide pins to the gearbox.	Guide pin for axis-2 gear unit: 3HAC049704-001 Always use three guide pins together! 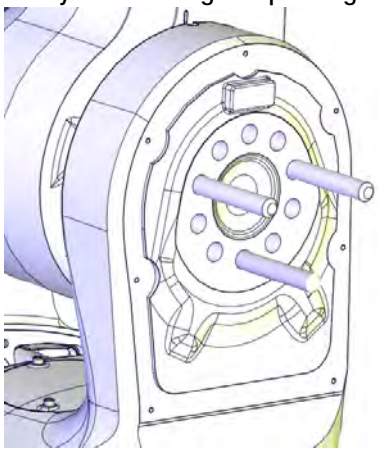 xx1300002563
6	Separate the lower arm from the swing. **Tip** If the lower arm is hard to loosen from the swing, two of the lower arm screws can be refitted in their attachment holes. Leave some space between the screw head and the swing casting. Then use a plastic hammer to knock on the screws lightly and evenly.	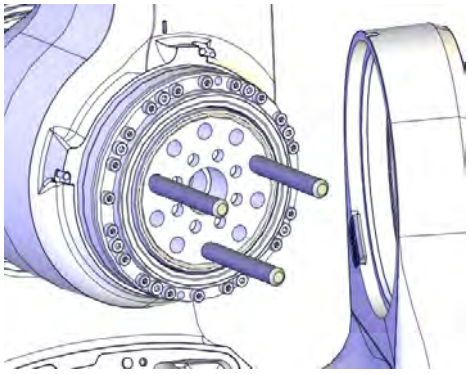 xx1300002553

Removing the swing

Use this procedure if replacing the swing.

	Action	Note
1	**DANGER** Make sure that all supplies for electrical power, hydraulic pressure, and air pressure are turned off.	
2	**CAUTION** For robots with protection type Clean Room: Always cut the paint with a knife and grind the paint edge when disassembling parts of the robot! See *Replacing parts on the robot on page 138*	

Continues on next page

© Copyright 2014 - 2017 ABB. All rights reserved.

	Action	Note
3	Remove the swing top cover by removing the screws. **Tip** Fit M4 screws in the cover holes to pull out the cover more easily. Only tighten the screws lightly in order not to damage the threads.	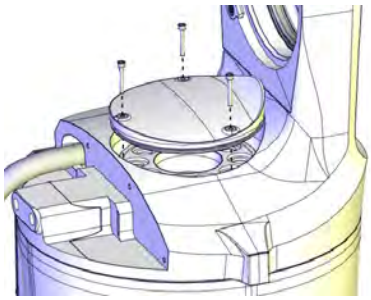 xx1400000447
4	Remove the swing attachment screws and washers.	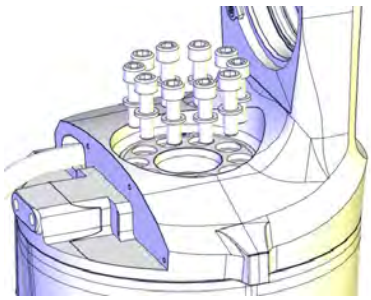 xx1400000448
5	Lift the swing upwards to access the axis-1 sealing ring. **CAUTION** Be aware of the cabling that is attached to the sealing ring fitted to the swing! The swing can not be removed completely until the axis-1 sealing ring is removed, as shown in following step.	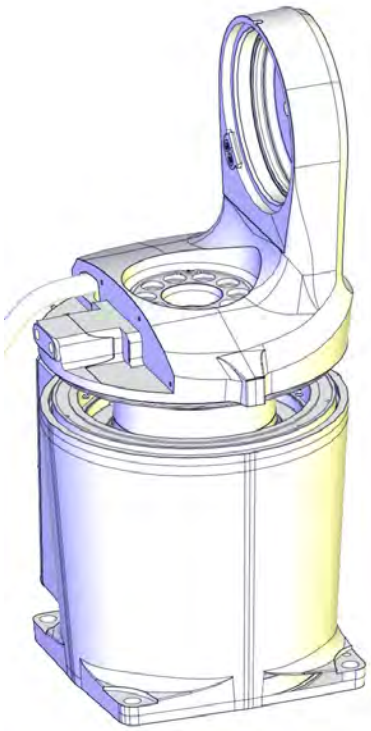 xx1400000449

Continues on next page

© Copyright 2014 - 2017 ABB. All rights reserved.

4.5.2 Replacing the swing spare parts (swing, axis-2 radial sealing)
Continued

	Action	Note
6	Remove the axis-1 sealing ring from the swing and carefully run the cabling out from the swing.	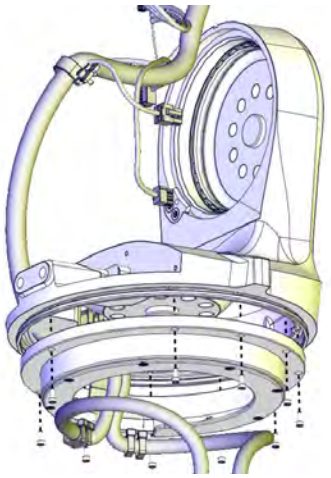 xx1400000455

Removing the axis-2 radial sealing (IP67 and Foundry Plus)

Use this procedure if replacing the axis-2 radial sealing.

The sealing is only used for robots with protection class IP67 (option 287-10) and with protection type Foundry Plus (option 287-3).

	Action	Note
1	**DANGER** Make sure that all supplies for electrical power, hydraulic pressure, and air pressure are turned off.	
2	**CAUTION** For robots with protection type Clean Room: Always cut the paint with a knife and grind the paint edge when disassembling parts of the robot! See *Replacing parts on the robot on page 138*	

Continues on next page

© Copyright 2014 - 2017 ABB. All rights reserved.

	Action	Note
3	Remove the axis-2 radial sealing from the cable housing.	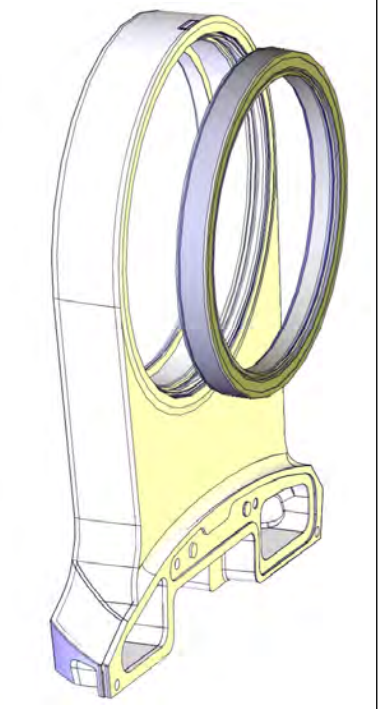 xx1400000450

Refitting the swing spare parts

Use these procedures to refit the swing spare parts.

Refitting the swing

Use this procedure if replacing the swing.

	Action	Note
1	Clean Room robots: clean the joints that have been opened. See *Replacing parts on the robot on page 138*	
2	**For robots with protection class IP67 (option 287-10)** **For robots with protection type Foundry Plus (option 287-3)** On swing version 3HAC058000-001: Add sealant to the swing groove.	Sealant: Sikaflex 521FC. 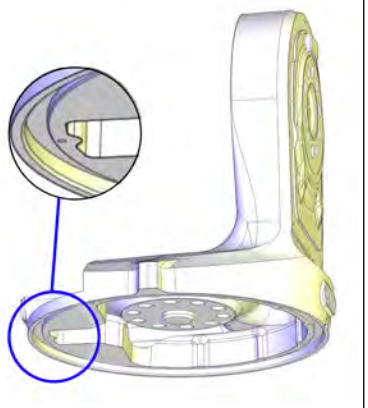 xx1600000053

Continues on next page

© Copyright 2014 - 2017 ABB. All rights reserved.

4.5.2 Replacing the swing spare parts (swing, axis-2 radial sealing)
Continued

	Action	Note
3	**For robots with protection class IP67 (option 287-10)** On axis-1 sealing ring version 3HAC056658-001: Add sealant to the axis-1 sealing ring. (See *Spare part versions for the axis-1 sealing ring on IP40/IP67 robots on page 797*.)	Sealant: Sikaflex 521FC. 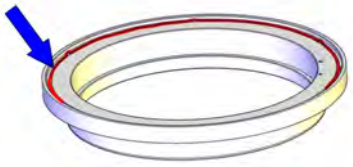 xx1600001125
4	**For robots with protection class IP67 (option 287-10)** On axis-1 sealing ring version 3HAC044676-001 or 3HAC058568-001: **For robots with protection type Foundry Plus (option 287-3)** On axis-1 sealing ring version 3HAC058568-001: Check the gasket on the axis-1 sealing ring. Replace if damaged. (See *Spare part versions for the axis-1 sealing ring on IP40/IP67 robots on page 797*.)	On axis-1 sealing ring version 3HAC044676-001: Axis-1 sealing ring gasket: 3HAC045685-001  xx1400000458 On axis-1 sealing ring version 3HAC058568-001: Axis-1 sealing ring gasket: 3HAC058349-001 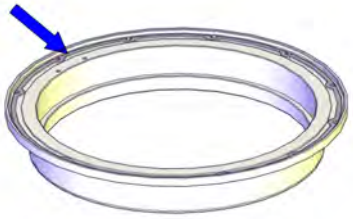 xx1600001149
5	**For robots with protection class IP67 (option 287-10)** On axis-1 sealing ring version 3HAC056658-001 or 3HAC058568-001: **For robots with protection type Foundry Plus (option 287-3)** On axis-1 sealing ring version 3HAC058568-001: Check the V-ring on the axis-1 sealing ring. (See *Spare part versions for the axis-1 sealing ring on IP40/IP67 robots on page 797*.) Replace if damaged.	V-ring: 3HAB3732-34 On axis-1 sealing ring version 3HAC044676-001:  xx1600001124 On axis-1 sealing ring version 3HAC058568-001:  xx1600001150

Continues on next page

© Copyright 2014 - 2017 ABB. All rights reserved.

	Action	Note
6	Check the cable protection on the axis-1 sealing ring. Replace if damaged. If replacing the cable protection, use locking liquid Loctite 243 on the screws.	Cable protection: 3HAC044691-001 Torx countersunk head screw M3x5: 3HAC14286-4 Tightening torque: 0.3 Nm  xx1400000456
7	Fit the axis-1 sealing ring to the swing with the screws and carefully run the cabling out up through the swing.	Axis-1 sealing ring: 3HAC044676-001 / 3HAC058568-001 i Tightening torque: 1.5 Nm. 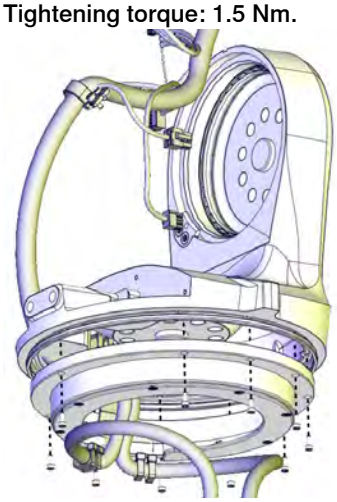 xx1400000455

Continues on next page

© Copyright 2014 - 2017 ABB. All rights reserved.

4.5.2 Replacing the swing spare parts (swing, axis-2 radial sealing)

Continued

	Action	Note
8	Lower the swing down into place while at the same time guiding the cabling through the cable hole.	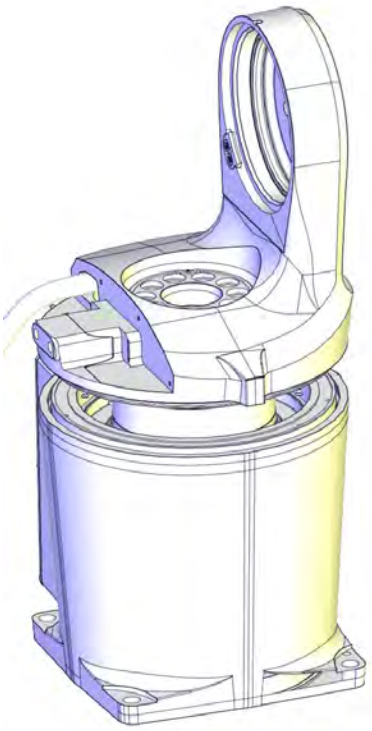 xx1400000449
9	Refit the swing attachment screws and washers.	Screws: 3HAB3409-52 (M10x35). Tightening torque: 40 Nm. 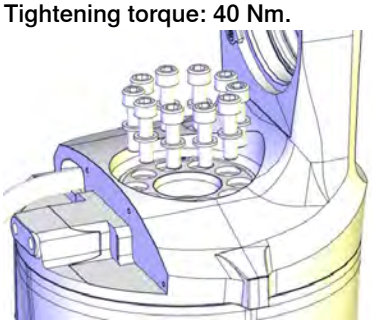 xx1400000448 **Note** Only use specified screws, never replace them with other screws.

Continues on next page

© Copyright 2014 - 2017 ABB. All rights reserved.

	Action	Note
10	**For robots with protection class IP67 (option 287-10)** **For robots with protection type Foundry Plus (option 287-3)** **For robots with with protection type Clean Room** **For robots with food grade lubrication** Check the gasket. Replace if damaged.	Gasket on top swing cover: 3HAC056696-001 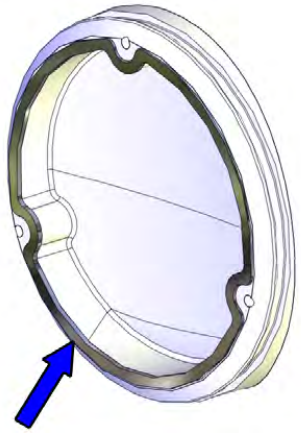 xx1400000425
11	Refit the swing top cover with the screws. Replace if damaged.	Cover on top of swing: 3HAC059679-001 : 3HAC056133-001 (used with protection type Clean Room) Cover on top of swing, Clean Room Cover on top of swing, food grade lubrication Screws: 3HAB3409-209 (M3x20). Tightening torque: 1.5 Nm. 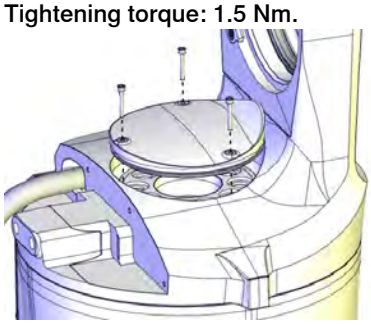 xx1400000447 **Note** Only use specified screws, never replace them with other screws.
12	Clean Room robots: seal and paint the joints that have been opened. See *Replacing parts on the robot on page 138* **Note** After all repair work, wipe the robot free from particles with spirit on a lint free cloth.	

i For information on which sealing ring to be ordered, see *Spare part versions for the axis-1 sealing ring on IP40/IP67 robots on page 797*.

Continues on next page

© Copyright 2014 - 2017 ABB. All rights reserved.

4.5.2 Replacing the swing spare parts (swing, axis-2 radial sealing)
Continued

Refitting the axis-2 radial sealing (IP67, Foundry Plus, Clean Room, food grade lubrication)

Use this procedure if replacing the axis-2 radial sealing.

The sealing is only used for robots with protection class IP67 (option 287-10), with protection type Foundry Plus (option 287-3), with protection type Clean Room and with food grade lubrication.

	Action	Note
1	Clean Room robots: clean the joints that have been opened. See *Replacing parts on the robot on page 138*	
2	**For robots with protection type Clean Room** Apply a little grease to the sealing and wipe clean after the refitting.	
3	Fit the axis-2 radial sealing into the cable housing.	Radial sealing with dust lip: 3HAB3701-41 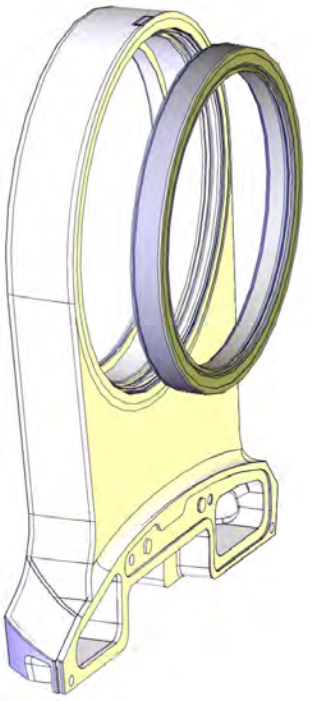 xx1400000450

Continues on next page

© Copyright 2014 - 2017 ABB. All rights reserved.

	Action	Note
4	Fit the circular part of the radial sealing fitting tool against the radial sealing.	Axis-2 sealing assembly tool set: 3HAC049694-001
5	Fit the tool plate to the other side of the cable housing with the six screws M6X50.	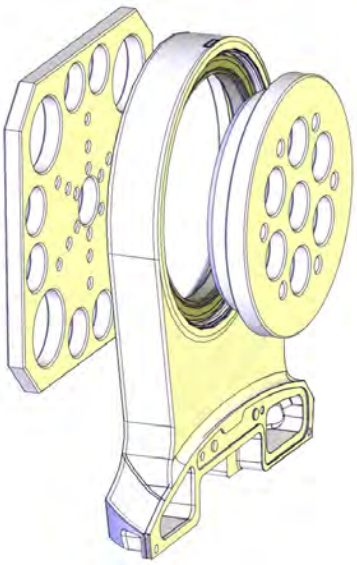 xx1400000451
6	Screw the screws, little by little, to press the sealing into place.	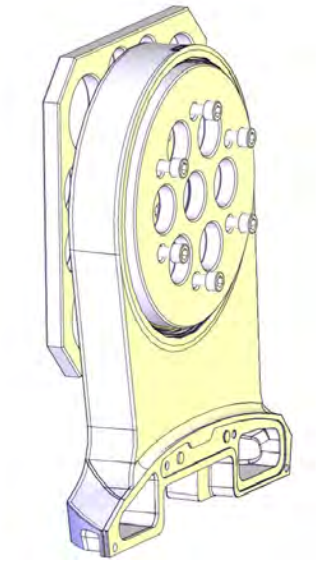 xx1400000452
7	Remove the assembly tool.	
8	Check that the sealing is undamaged and properly fitted.	
9	Clean Room robots: seal and paint the joints that have been opened. See *Replacing parts on the robot on page 138* **Note** After all repair work, wipe the robot free from particles with spirit on a lint free cloth.	

Continues on next page

© Copyright 2014 - 2017 ABB. All rights reserved.

4.5.2 Replacing the swing spare parts (swing, axis-2 radial sealing)

Continued

Fitting lifting equipment to the upper and lower arm

	Action	Note
1	**CAUTION** The lower and upper arms together weigh 30 kg. All lifting accessories used must be sized accordingly!	
2	Clean Room robots: clean the joints that have been opened. See *Replacing parts on the robot on page 138*	
3	Fit lifting slings to the upper and lower arm.	Roundsling, 2 m
4	Clean Room robots: seal and paint the joints that have been opened. See *Replacing parts on the robot on page 138* **Note** After all repair work, wipe the robot free from particles with spirit on a lint free cloth.	

Refitting the lower arm

	Action	Note
1	For robots with protection type Clean Room: clean the joints that have been opened. See *Replacing parts on the robot on page 138*	
2	Check the o-ring. Replace if damaged.	O-ring: 3HAC048939-001 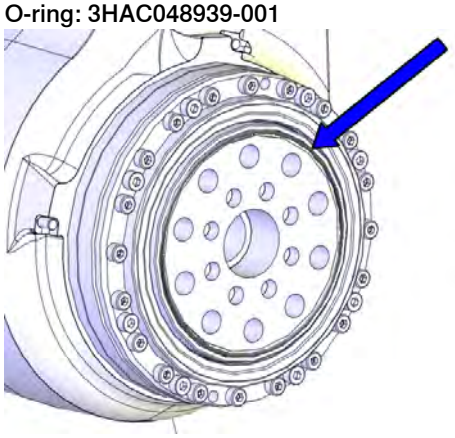 xx1300002556

Continues on next page

© Copyright 2014 - 2017 ABB. All rights reserved.

	Action	Note
3	Remove residual locking liquid and other pollutants with cleaning agent Loctite 7063. Apply flange sealing Loctite 574 to the cylindrical surface in the swing. **Note** For Clean Room robots, wipe clean the overflowing Loctite 574 if there is any.	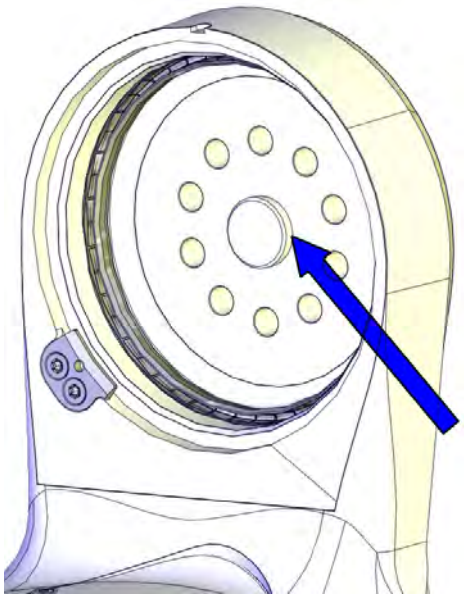 xx1400001403
4	Fit guide pins to the gearbox.	Guide pin for axis-2 gear unit: 3HAC049704-001 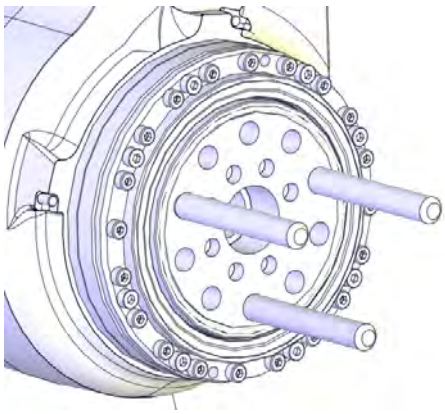 xx1300002562 Always use three guide pins together!

Continues on next page

© Copyright 2014 - 2017 ABB. All rights reserved.

4.5.2 Replacing the swing spare parts (swing, axis-2 radial sealing)

Continued

	Action	Note
5	**For robots with protection class IP67 (option 287-10)** **For robots with protection type Foundry Plus (option 287-3)** Check the sealing. Replace if damaged. **CAUTION** Do not fit M2 variseal sealing on Clean Room robots.	M2 variseal sealing: 3HAC044641-003 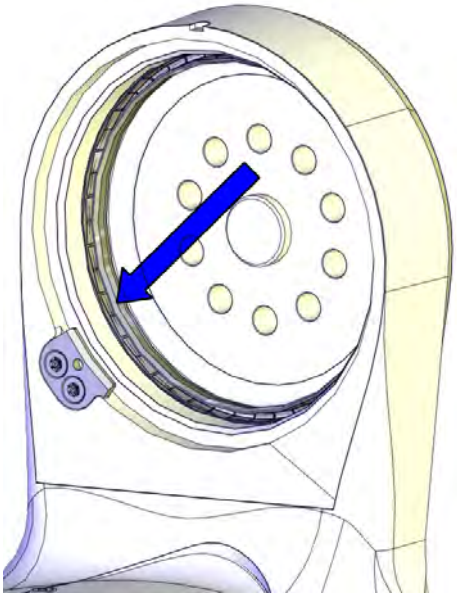 xx1400000453
6	Fit the lower arm to the swing, with guidance from the guide pins.	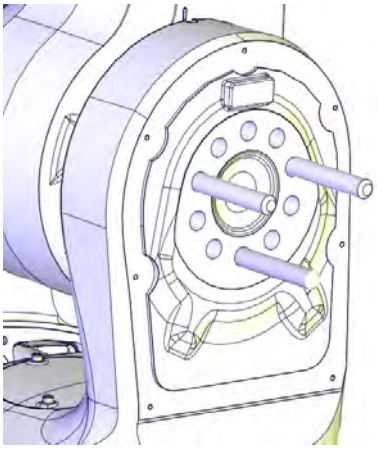 xx1300002563

Continues on next page

© Copyright 2014 - 2017 ABB. All rights reserved.

	Action	Note
7	Refit the lower arm screws and washers, using locking liquid Loctite 243. Secure the screws but do not tighten yet.	Screws: 3HAB3409-51 (M10x30). 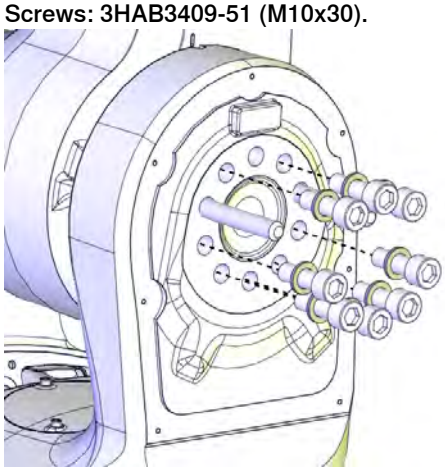 xx1300002564 **Note** Only use specified screws, never replace them with other screws.
8	Remove the guide pins and refit the remaining screws and washers using locking liquid Loctite 243.	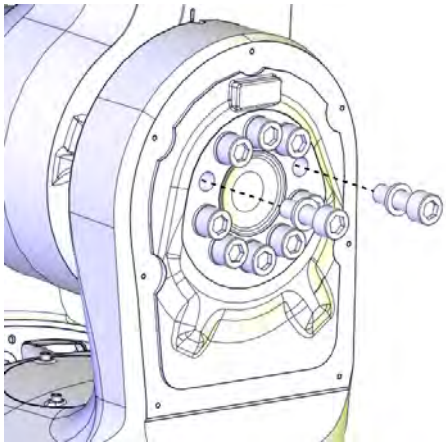 xx1300002565
9	Tighten all screws.	Tightening torque: 45 Nm

Continues on next page

© Copyright 2014 - 2017 ABB. All rights reserved.

4.5.2 Replacing the swing spare parts (swing, axis-2 radial sealing)
Continued

	Action	Note
10	**For robots with protection class IP67 (option 287-10)** **For robots with protection type Foundry Plus (option 287-3)** **For robots with with protection type Clean Room** **For robots with food grade lubrication** Check the swing cover gasket. Replace if damaged.	Gasket on swing cover: 3HAC056727-001 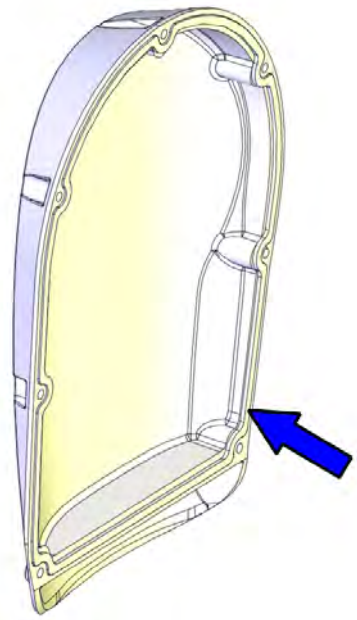 xx1400000007
11	Refit the swing cover. Replace if damaged.	Screws: 3HAB3409-207 (M3x8). Tightening torque: 1.5 Nm. Swing cover: 3HAC059676-001 : 3HAC056215-001 (used with protection type Clean Room) Swing cover, Clean Room Swing cover, food grade lubrication 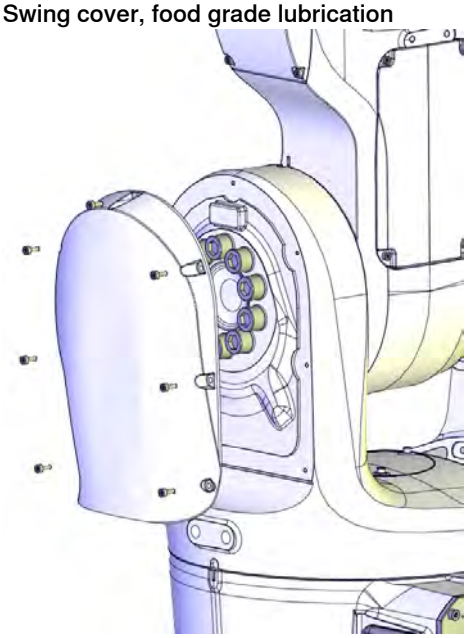 xx1300002551

Continues on next page

© Copyright 2014 - 2017 ABB. All rights reserved.

	Action	Note
12	**For robots with protection type Foundry Plus (option 287-3)** Check the protection plugs for lifting holes. Replace if damaged.	Protection plug for lifting holes: 3HAC4836-24 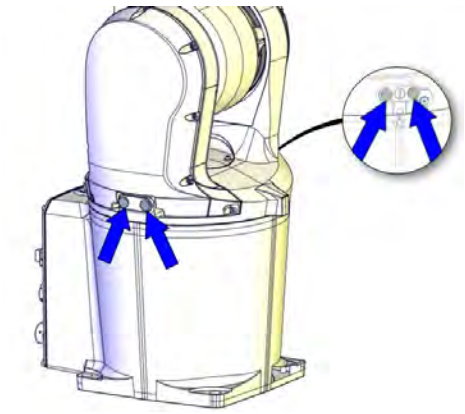 xx1600001151
13	**For robots with protection type Clean Room** Apply a string of the sealant Sikaflex 521FC to the joint of the swing cover. Smooth out the sealant string using a finger tip. Use washing-up on finger tips to get a smooth joint. If necessary, add extra sealant to get a full cover joint.	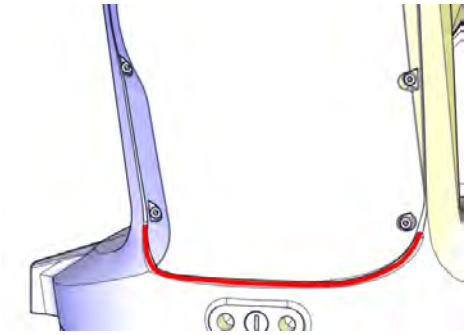 xx1600000217
14	**For robots with protection type Foundry Plus (option 287-3)** If required, fit two screws for protection.	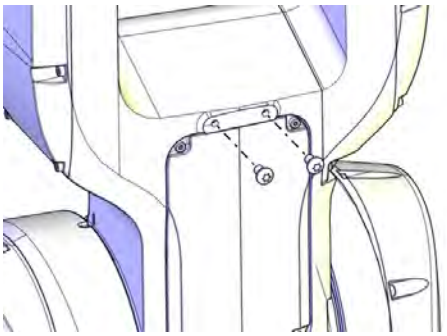 xx1600001154
15	For robots with protection type Clean Room: seal and paint the joints that have been opened. See *Replacing parts on the robot on page 138* **Note** After all repair work, wipe the robot free from particles with spirit on a lint free cloth.	

Continues on next page

© Copyright 2014 - 2017 ABB. All rights reserved.

4.5.2 Replacing the swing spare parts (swing, axis-2 radial sealing)
Continued

Refitting the cable package in the lower arm

	Action	Note
1	Clean Room robots: clean the joints that have been opened. See *Replacing parts on the robot on page 138*	
2	Check the axis-2 sealing ring. **For robots with protection class IP67 (option 287-10)** **For robots with protection type Foundry Plus (option 287-3)** **For robots with with protection type Clean Room** **For robots with food grade lubrication** Check the gasket. Replace if damaged.	Axis-2 sealing ring: 3HAC044677-001 Gasket of axis-2 sealing ring: 3HAC045688-001 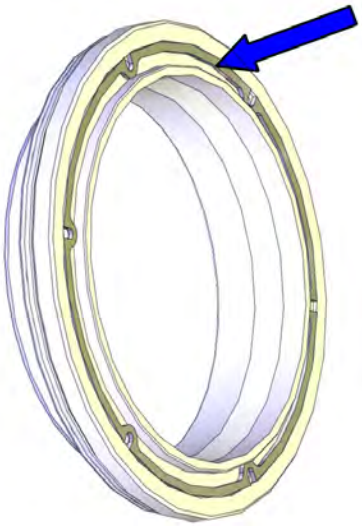 xx1400000476
3	**For robots with protection class IP67 (option 287-10)** **For robots with protection type Foundry Plus (option 287-3)** **For robots with with protection type Clean Room** **For robots with food grade lubrication** Check the gasket of the cable housing plastic plate. Replace if damaged.	Gasket of plastic plate: 3HAC044894-001 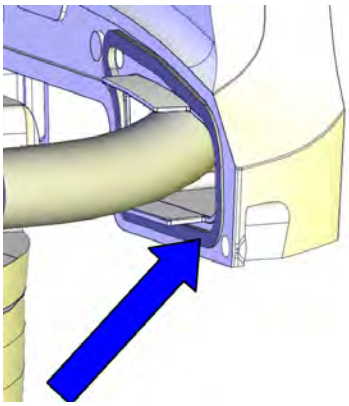 xx1400000457

Continues on next page

© Copyright 2014 - 2017 ABB. All rights reserved.

	Action	Note
4	Fetch the cable housing, the plastic plate and the axis-2 sealing ring and run the cable package through them.	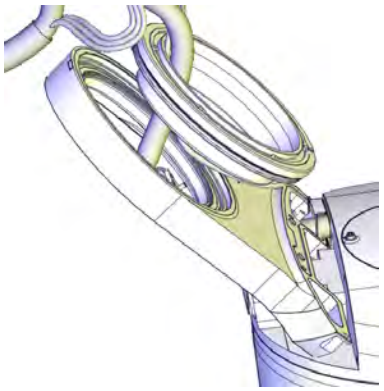 xx1400000025
5	Fasten the plastic plate to the cable housing, if removed. Replace if damaged.	The plastic plate is included in: Cable harness material set: 3HAC049663-001. 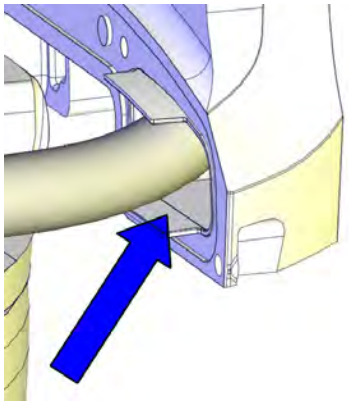 xx1400000023

Continues on next page

© Copyright 2014 - 2017 ABB. All rights reserved.

4.5.2 Replacing the swing spare parts (swing, axis-2 radial sealing)
Continued

	Action	Note
6	**For robots with protection class IP67 (option 287-10)** **For robots with protection type Foundry Plus (option 287-3)** Check the sealing. Replace if damaged. **CAUTION** Do not fit M2 variseal sealing on Clean Room robots.	M2 variseal sealing: 3HAC044641-004 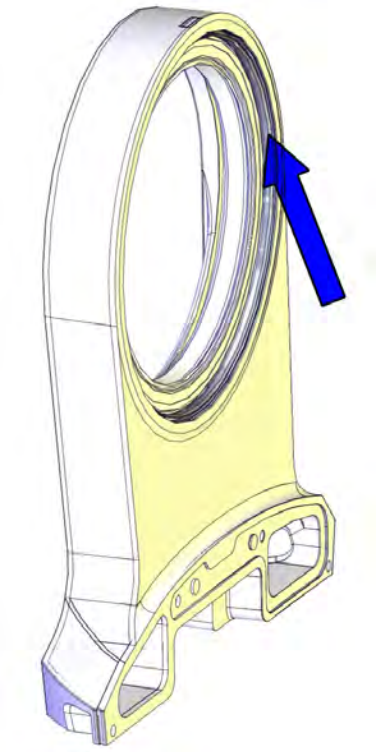 xx1400000454

Continues on next page

© Copyright 2014 - 2017 ABB. All rights reserved.

	Action	Note
7	**For robots with protection class IP67 (option 287-10)** **For robots with protection type Foundry Plus (option 287-3)** **For robots with with protection type Clean Room** **For robots with food grade lubrication** Check the radial sealing. Replace if damaged. **Note** For Clean Room robots, apply a little grease to the sealing when replacing the radial sealing and wipe clean after the replacement.	Radial sealing with dust lip: 3HAB3701-41 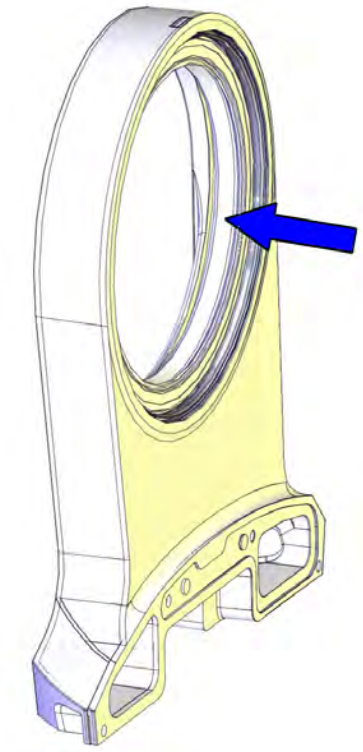 xx1400000753 Replacement is detailed in *Replacing the swing spare parts (swing, axis-2 radial sealing) on page 518*.
8	Guide the cable package into the lower arm. **Tip** There is a groove on the lower arm casting that simplifies cable passage, if needed. Its position can easily be felt by hand.	
9	Refit the axis-2 sealing ring with the screws.	Tightening torque: 1.5 Nm. 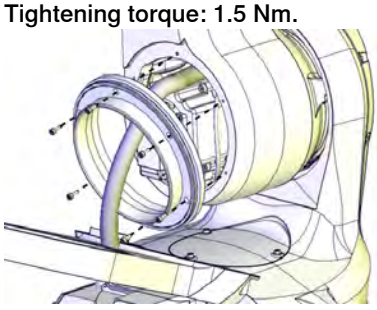 xx1400000020

Continues on next page

© Copyright 2014 - 2017 ABB. All rights reserved.

4.5.2 Replacing the swing spare parts (swing, axis-2 radial sealing)

Continued

	Action	Note
10	Refit the cable housing with the screws.	Screws: 3HAB3409-236 (M4x10). Tightening torque: 3 Nm. 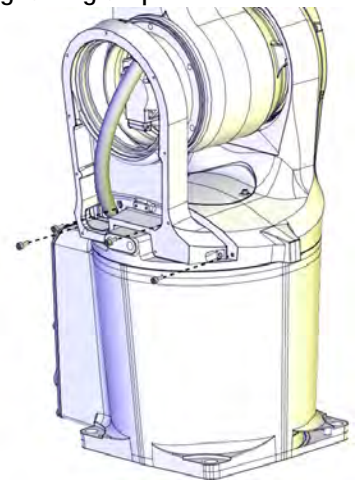 xx1300002435 **Note** Only use specified screws, never replace them with other screws.
11	Apply grease to the cable package, cover all moving area of the package.	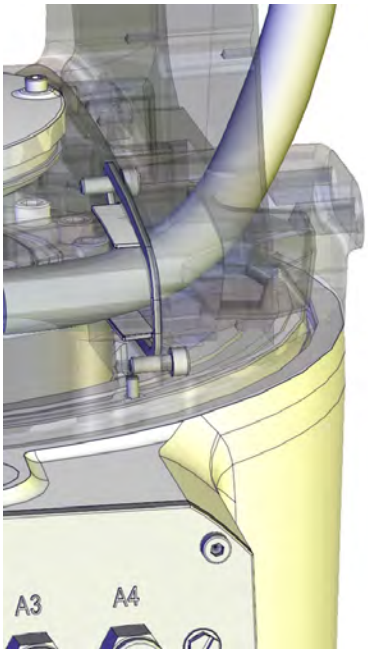 xx1400000481

Continues on next page

© Copyright 2014 - 2017 ABB. All rights reserved.

	Action	Note
12	Reconnect the motor connectors. • R2.ME2 • R2.MP2	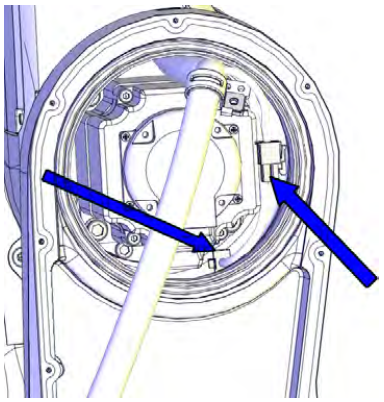 xx1300002434
13	Refit the axis-2 motor bracket to the cable package with the two screws. **CAUTION** Do not loosen the cable clamp screw! There is a risk of rearrangement of the cable layout which would result in shortened lifetime of the cable harness.	Tightening torque: 1.5 Nm. 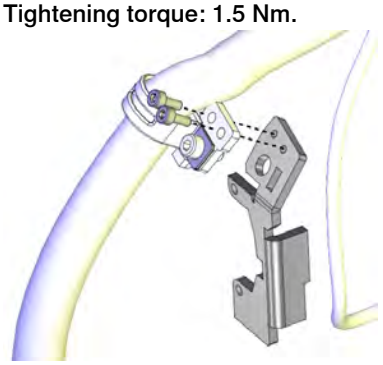 xx1400000021
14	Refit the axis-2 motor bracket to the motor.	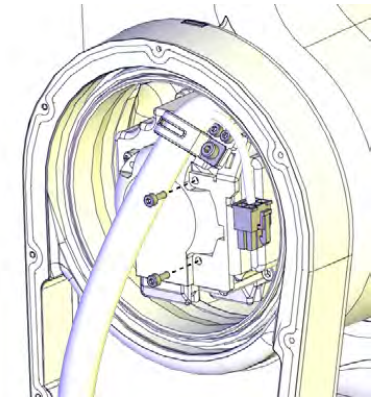 xx1300002432

Continues on next page

© Copyright 2014 - 2017 ABB. All rights reserved.

4.5.2 Replacing the swing spare parts (swing, axis-2 radial sealing)

Continued

	Action	Note
15	Secure the connector R2.MP2 and its cable with cable straps onto the motor bracket. Make sure the connector is fixed by its tab to the bracket.	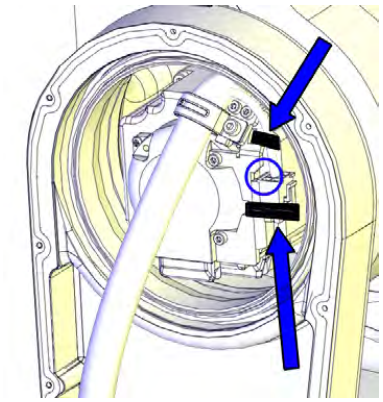 xx1400001529
16	Apply grease to the cable package, cover all moving area of the package.	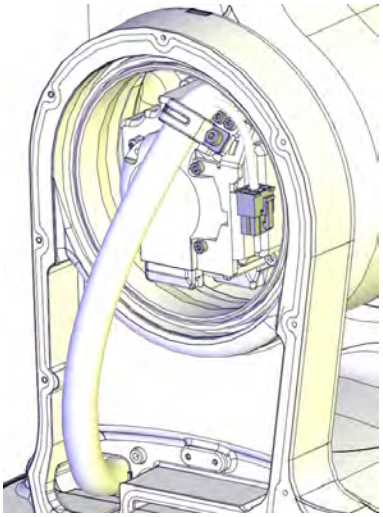 xx1400000482
17	In order to keep the cabling away from the hot axis-2 motor, the cable package must be secured accordingly inside the EIB/SMB cavity: 1 The cable package is strapped with tape by the supplier at two locations. Put a cable strap around the cable package at each location. 2 Insert a third cable strap through the top strap and the bottom strap, and close the strap to secure the cable package and keep it in place. See the figure.	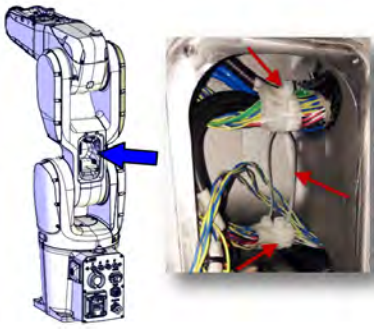 xx1400001131

Continues on next page

© Copyright 2014 - 2017 ABB. All rights reserved.

	Action	Note
18	**For robots with protection class IP67 (option 287-10)** **For robots with protection type Foundry Plus (option 287-3)** **For robots with with protection type Clean Room** **For robots with food grade lubrication** Check the gasket of the cable housing cover. Replace if damaged.	Gasket on cable housing cover: 3HAC056726-001 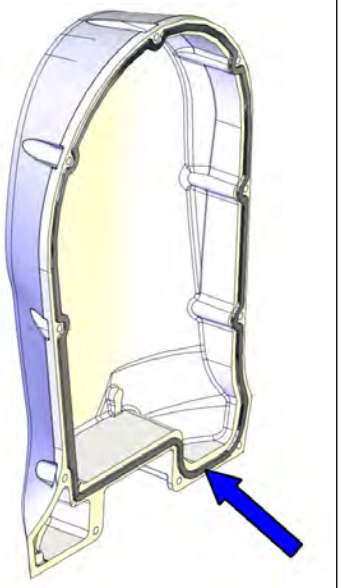 xx1400000424
19	Check the PTFE film. Replace if damaged.	PTFE film on cable housing cover: 3HAC044660-001
20	Apply grease to the inner surface of the cable housing cover and to the PTFE film surface.	

Continues on next page

© Copyright 2014 - 2017 ABB. All rights reserved.

4.5.2 Replacing the swing spare parts (swing, axis-2 radial sealing)

Continued

	Action	Note
21	Refit the cable housing cover. Replace if damaged. **Note** Remember to refit the two lower screws shown in the figure.	Cable housing cover of the swing: 3HAC059678-001 : 3HAC056214-001 (used with protection type Clean Room) Cable housing cover of the swing, Clean Room Cable housing cover of the swing, food grade lubrication Screws: 3HAB3409-207 (M3x8). Tightening torque: 1.5 Nm. 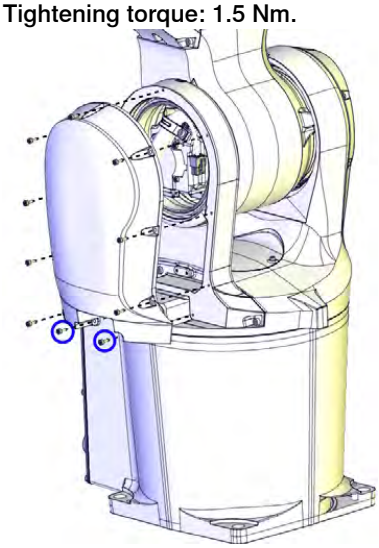 xx1300002431 **Note** Only use specified screws, never replace them with other screws.
22	**For robots with protection type Foundry Plus (option 287-3)** Check the protection plugs for lifting holes. Replace if damaged.	Protection plug for lifting holes: 3HAC4836-24 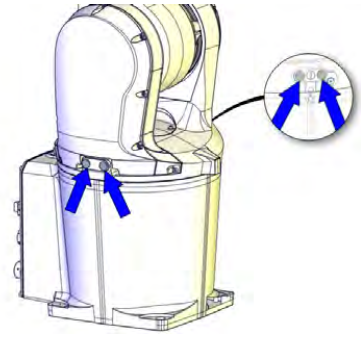 xx1600001151

Continues on next page

© Copyright 2014 - 2017 ABB. All rights reserved.

	Action	Note
23	**For robots with with protection type Clean Room** **For robots with food grade lubrication** Refit the swing sealing plug. Follow the procedure specified in *Refitting the swing sealing plug on page 145*.	Swing sealing plug:3HAC053687-001 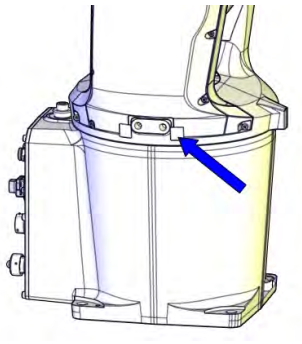 xx1600000205
24	Refit the lower arm bracket to the cable package. **CAUTION** Do not loosen the cable clamp screw! There is a risk of rearrangement of the cable layout which would result in shortened lifetime of the cable harness.	Tightening torque: 1.5 Nm. 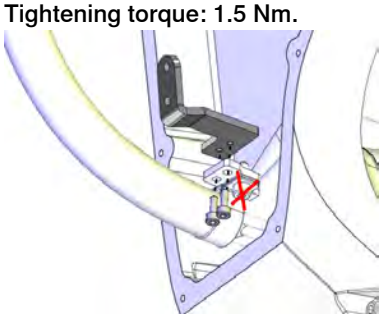 xx1300002430
25	Clean Room robots: seal and paint the joints that have been opened. See *Replacing parts on the robot on page 138* **Note** After all repair work, wipe the robot free from particles with spirit on a lint free cloth.	

Connecting the cabling in the lower arm

	Action	Note
1	**ELECTROSTATIC DISCHARGE (ESD)** The unit is sensitive to ESD. Before handling the unit please read the safety information in the section *WARNING - The unit is sensitive to ESD! on page 50*	
2	Clean Room robots: clean the joints that have been opened. See *Replacing parts on the robot on page 138*	

Continues on next page

© Copyright 2014 - 2017 ABB. All rights reserved.

4.5.2 Replacing the swing spare parts (swing, axis-2 radial sealing)
Continued

	Action	Note
3	**For robots with protection class IP67 (option 287-10)** **For robots with protection type Foundry Plus (option 287-3)** **For robots with with protection type Clean Room** **For robots with food grade lubrication** Check the EIB/SMB cover gasket. Replace if damaged.	Gasket on EIB/SMB cover: 3HAC056728-001 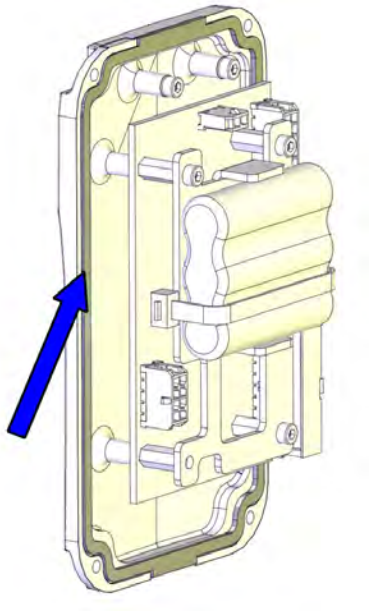 xx1400000475
4	**Valid for IRB 1200 (no type specified) and IRB 1200 Type A** Connect the connectors to the EIB unit. • R1.ME1-3 • R1.ME4-6 • R2.EIB **WARNING** Make sure not to mix the R2.EIB and R2.ME2. Axis 2 may be severely damaged. See the labels on the connectors for correct connection.	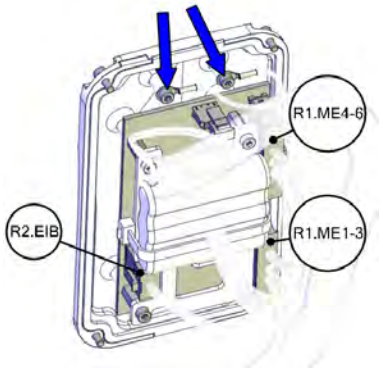 xx1300002428
5	**Valid for IRB 1200 (no type specified) and IRB 1200 Type A** Connect the lugs to the EIB/SMB cover.	
6	**Valid for IRB 1200 Type B** Connect the connectors to the SMB unit. • R1.ME1,2,4,5 • R1.ME3,6 • R2.SMB **WARNING** Make sure not to mix the R2.SMB and R2.ME2. Axis 2 may be severely damaged. See the labels on the connectors for correct connection.	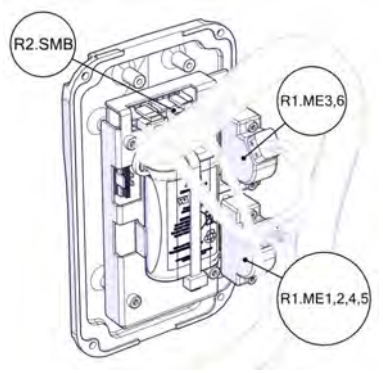 xx1700000005

Continues on next page

© Copyright 2014 - 2017 ABB. All rights reserved.

	Action	Note
7	**Valid for IRB 1200 Type B** Tighten the connector screws.	Tightening torque: 0.3 Nm 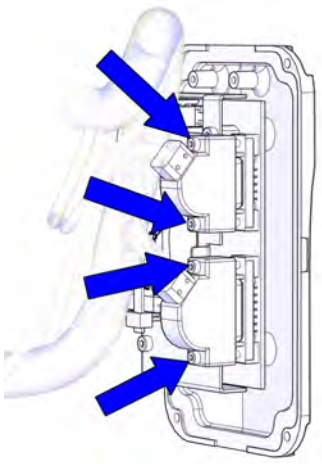 xx1700000004
8	Refit the EIB/SMB cover to the lower arm with the attachment screws.	Screws: 3HAB3409-207 (M3x8). Tightening torque: 1.5 Nm 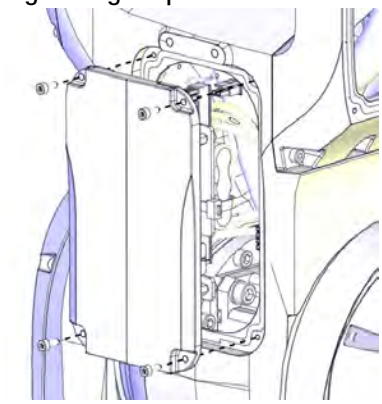 xx1300002427 **Note** Only use specified screws, never replace them with other screws.

Continues on next page

© Copyright 2014 - 2017 ABB. All rights reserved.

4.5.2 Replacing the swing spare parts (swing, axis-2 radial sealing)
Continued

	Action	Note
9	Refit the fix sheet attachment screws in the lower arm.	Tightening torque: 1.5 Nm. 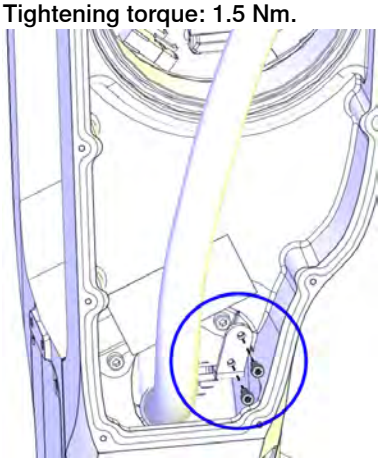 xx1300002426
10	Clean Room robots: seal and paint the joints that have been opened. See *Replacing parts on the robot on page 138* **Note** After all repair work, wipe the robot free from particles with spirit on a lint free cloth.	

Refitting the cable package in the housing

	Action	Note
1	Clean Room robots: clean the joints that have been opened. See *Replacing parts on the robot on page 138*	
2	Before guiding the cable package into the housing and upper arm, apply grease to the cable package, to the area going into the upper arm, shown in the figure. Cover all moving area of the package.	Area to be lubricated, shown in cable package already fitted to the housing. 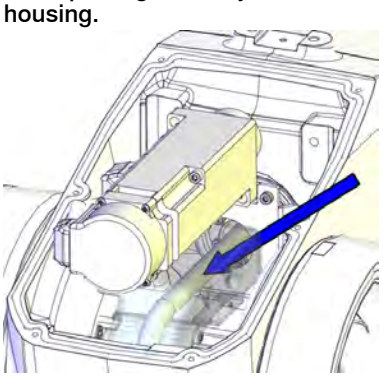 xx1400000483

Continues on next page

© Copyright 2014 - 2017 ABB. All rights reserved.

	Action	Note
3	Guide the cable package into the upper arm, through the housing. **Note** Guide the air hoses (A) underneath the bottom side of the axis-3 motor and the axis-3 motor cables (B) on top of the motor, see cable layout figure. The fix point of the air hoses is pre-determined (marked) and must be matched against the air hose holder on the left side of the axis-3 motor. **Note** The air hose holder keeps the air hoses arranged in an optimized way. It is necessary to keep the air hose holder vertically and firmly against the left side of the axis-3 motor.	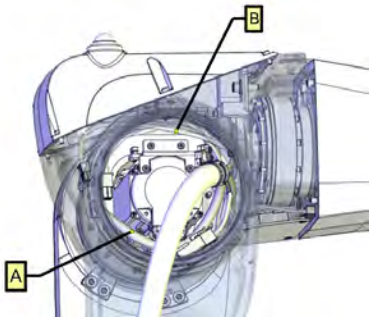 xx1400001472
4	Refit the bracket to the sheet with two screws. **CAUTION** Do not loosen the cable clamp screw! There is a risk of rearrangement of the cable layout which would result in shortened lifetime of the cable harness.	Tightening torque: 1.5 Nm. 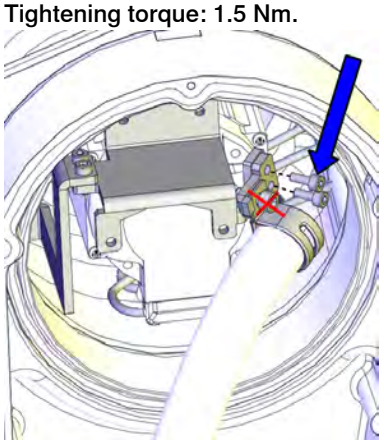 xx1300002424
5	Refit the fix sheet to the motor.	Tightening torque: 1.5 Nm. 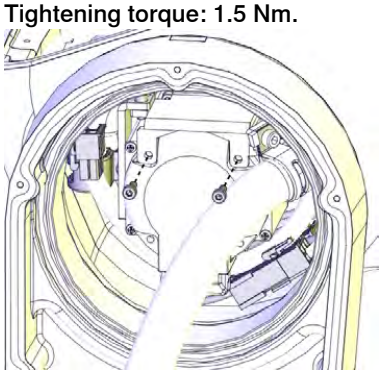 xx1300002423

Continues on next page

© Copyright 2014 - 2017 ABB. All rights reserved.

4.5.2 Replacing the swing spare parts (swing, axis-2 radial sealing)

Continued

	Action	Note
6	Refit the fix sheet to the inner plastic guide.	Tightening torque: 1.5 Nm. 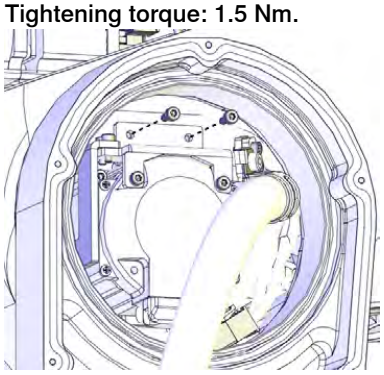 xx1300002421
7	Fit the air hose holder to the bracket. Replace the holder, if damaged. **Tip** If the air hose holder is difficult to fit, firstly remove the bracket from the fix sheet by removing the two M3 screws. Fit the holder to the bracket and then refit the complete assembly to the fix sheet again. Tightening torque for the two M3 screws: 1.5 Nm. 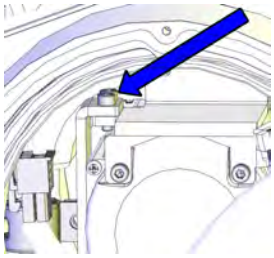 xx1400001133	Air hose holders are included in Cable harness material set (3HAC049663-001). Tightening torque: 4 Nm. 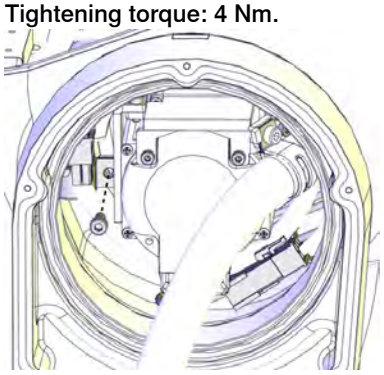 xx1300002422
8	Reconnect the axis-3 motor connectors.	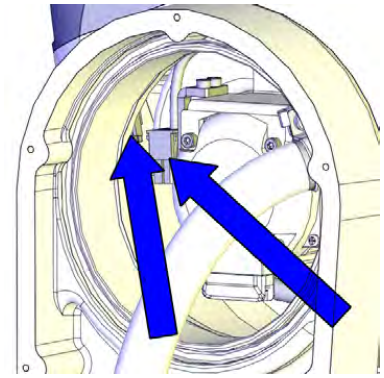 xx1300002420

Continues on next page

© Copyright 2014 - 2017 ABB. All rights reserved.

	Action	Note
9	Apply grease to the cable package, cover all moving area of the package.	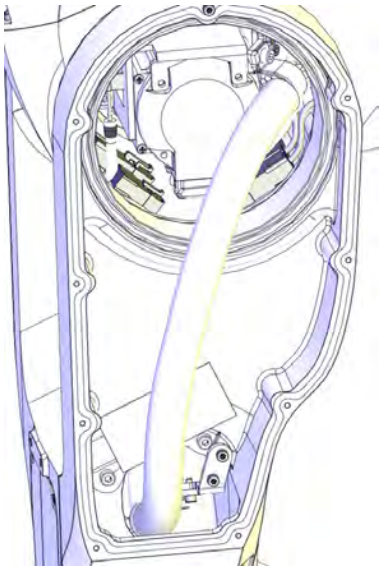 xx1400000754
10	**Valid for IRB 1200-5/0.9** Secure the cable package at the bottom of the housing with cable straps.	
11	Clean Room robots: seal and paint the joints that have been opened. See *Replacing parts on the robot on page 138* **Note** After all repair work, wipe the robot free from particles with spirit on a lint free cloth.	

Connecting the axis-4 motor connectors

	Action	Note
1	Reconnect the motor connectors.	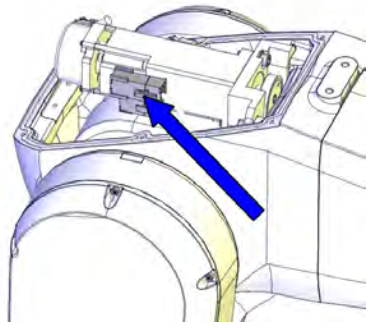 xx1300002371

Continues on next page

© Copyright 2014 - 2017 ABB. All rights reserved.

4.5.2 Replacing the swing spare parts (swing, axis-2 radial sealing)

Continued

	Action	Note
2	Secure the connectors to the motor with a cable strap.	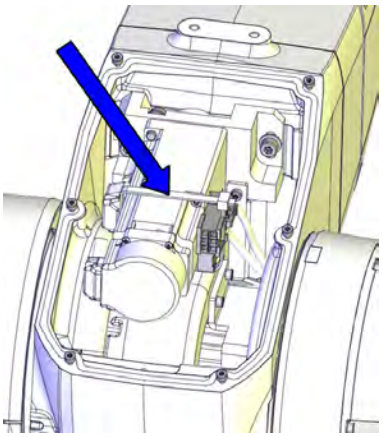 xx1300002494

Connecting the axis-4 FPC connectors

	Action	Note
1	Clean Room robots: clean the joints that have been opened. See *Replacing parts on the robot on page 138*	
2	Reconnect the FPC connectors. **Tip** See the number markings on the connectors for help to find the corresponding connector.	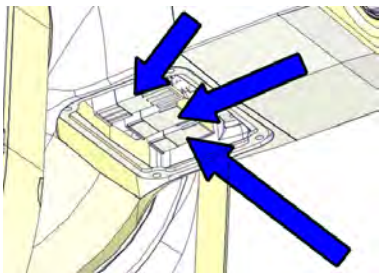 xx1300002399

Continues on next page

© Copyright 2014 - 2017 ABB. All rights reserved.

	Action	Note
3	Reconnect the FPC connectors and push them into place inside the housing. **Tip** See the number markings on the connectors for help to find the corresponding connector.	Cable layout in IRB 1200-7/0.7 : 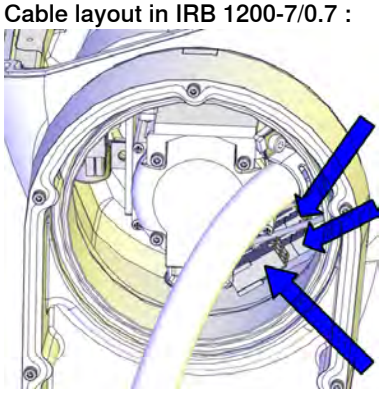 xx1300002412 Cable layout in IRB 1200-5/0.9 : 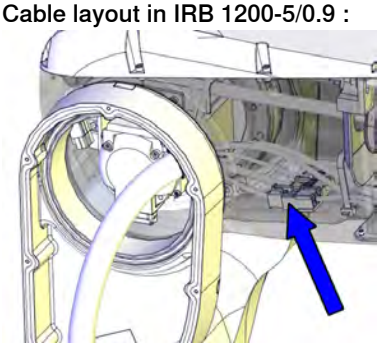 xx1400001471
4	Remove residual locking liquid and other pollutants with cleaning agent Loctite 7063.	

Continues on next page

© Copyright 2014 - 2017 ABB. All rights reserved.

4.5.2 Replacing the swing spare parts (swing, axis-2 radial sealing)
Continued

	Action	Note
5	**For robots with protection class IP67 (option 287-10)** **For robots with protection type Foundry Plus (option 287-3)** Apply flange sealing Sikaflex 521FC on the mounting surfaces of the small cover on the housing.	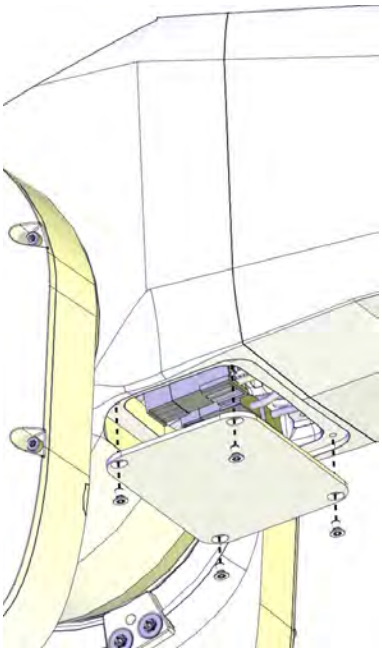 xx1300002398 Housing small cover: 3HAC059684-001 : 3HAC056142-001 (used with protection type Clean Room) Housing small cover, Clean Room Housing small cover, food grade lubrication Screws: 3HAC14286-4 (M3X5). Tightening torque: 1 Nm.
6	Refit the small cover to the housing. Replace if damaged.	
7	**For robots with protection type Clean Room** Apply a string of the sealant Sikaflex 521FC to the joint of the small cover on the housing. Smooth out the sealant string using a finger tip. Use washing-up on finger tips to get a smooth joint. If necessary, add extra sealant to get a full cover joint.	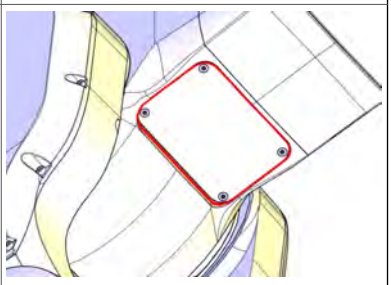 xx1600000214

Continues on next page

© Copyright 2014 - 2017 ABB. All rights reserved.

	Action	Note
8	Refit the plate.	Tightening torque: 1.5 Nm. 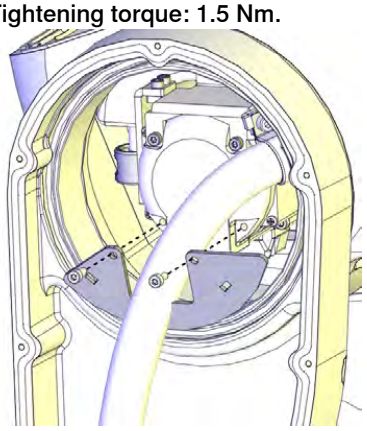 xx1300002413
9	Check the PTFE film on the cable housing. Replace if damaged.	PTFE film on lower arm cable housing: 3HAC044710-001 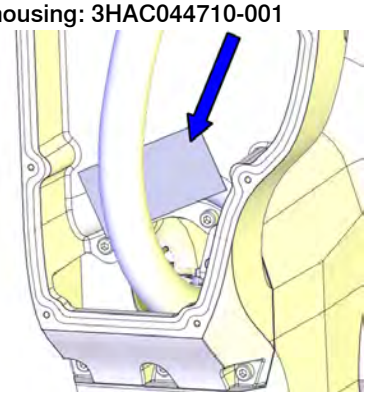 xx1400000740

Continues on next page

© Copyright 2014 - 2017 ABB. All rights reserved.

4.5.2 Replacing the swing spare parts (swing, axis-2 radial sealing)
Continued

	Action	Note
10	**For robots with protection class IP67 (option 287-10)** **For robots with protection type Foundry Plus (option 287-3)** **For robots with with protection type Clean Room** **For robots with food grade lubrication** Check the gasket of the cable housing cover. Replace if damaged.	Gasket on cable housing cover: 3HAC056724-001 PTFE film on cable housing cover: 3HAC044660-001 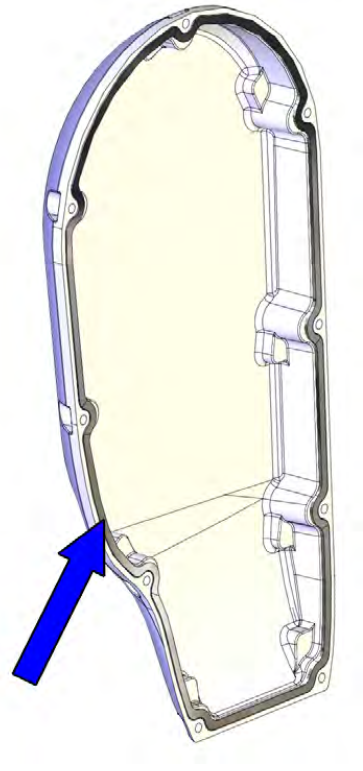 xx1400000048
11	Check the PTFE film on the cable housing cover. Replace if damaged.	
12	Apply grease to the inner surface of the cable housing cover and the PTFE film surface.	

Continues on next page

© Copyright 2014 - 2017 ABB. All rights reserved.

	Action	Note
13	Refit the cable housing cover.	Screws: 3HAB3409-207 (M3x8). Tightening torque: 1.5 Nm 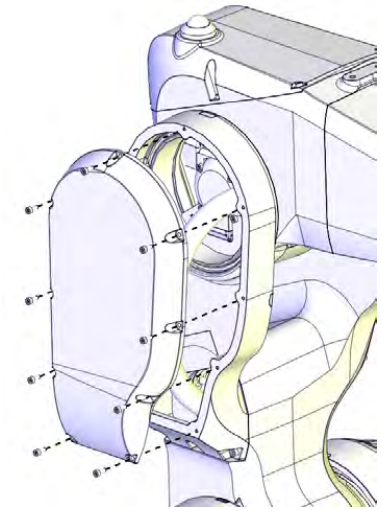 xx1300002400 **Note** Only use specified screws, never replace them with other screws.
14	Clean Room robots: seal and paint the joints that have been opened. See *Replacing parts on the robot on page 138* **Note** After all repair work, wipe the robot free from particles with spirit on a lint free cloth.	

Connecting the air hoses and CP/CS cabling (if equipped)

	Action	Note
1	Reconnect the air hoses.	Air connector set with Ethernet hole in flange: 3HAC049664-001 Air connector set without Ethernet hole in flange: 3HAC049665-001 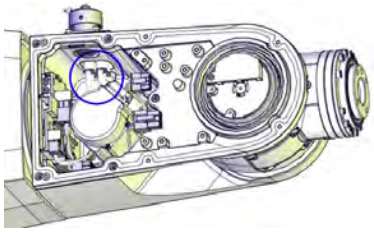 xx1400000738

Continues on next page

© Copyright 2014 - 2017 ABB. All rights reserved.

4.5.2 Replacing the swing spare parts (swing, axis-2 radial sealing)
Continued

	Action	Note
2	If equipped, reconnect the CP/CS connector. **For robots with protection class IP67 (option 287-10)** **For robots with protection type Foundry Plus (option 287-3)** 1 Check the gasket. 2 Replace if damaged. **For robots with protection type Clean Room:** 1 Remove residual locking liquid and other pollutants with cleaning agent Loctite 7063. 2 Apply flange sealing Loctite 574 on the mounting surfaces of the CP/CS connector and wipe clean if there is any overflowing Loctite 574.	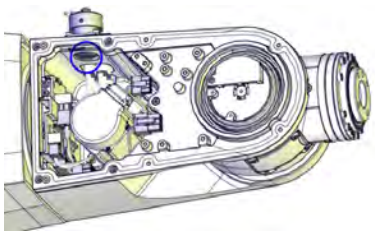 xx1500000252 On robots with protection class IP67 On robots with protection type Foundry Plus Gasket: 3HAC058567-001 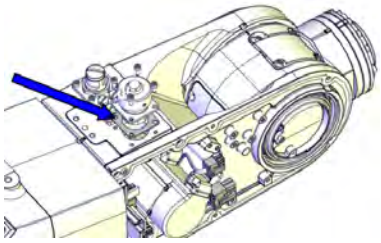 xx1500000251
3	**For robots with protection type Foundry Plus** If required, fit the protection bracket for CP/CS connectors.	Protection bracket for CP/CS connectors: 3HAC058350-001 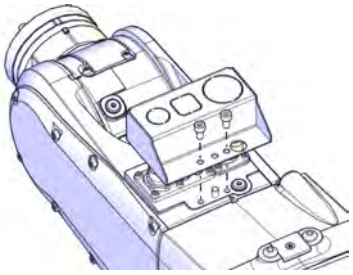 xx1600001152

Connecting the axis-5 motor FPC connectors

	Action	Note
1	Connect the axis-5 FPC connectors and snap them to their holders.	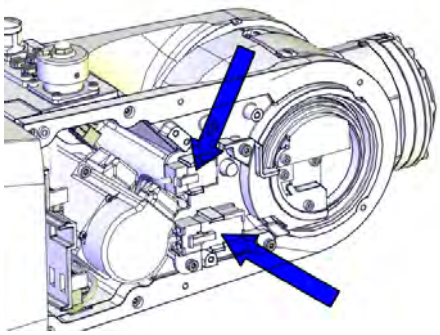 xx1300002390

Continues on next page

© Copyright 2014 - 2017 ABB. All rights reserved.

Connecting the axis-5 motor connectors

	Action	Note
1	Reconnect the motor cables. • R3.MP5 • R3.ME5	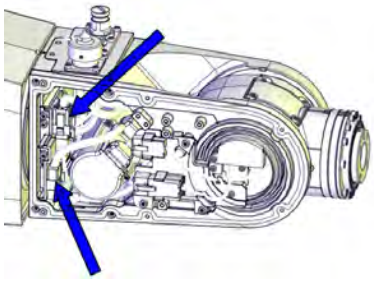 xx1300002360

Refitting the tubular cable housing cover

	Action	Note
1	Clean Room robots: clean the joints that have been opened. See *Replacing parts on the robot on page 138*	
2	**For robots with protection class IP67 (option 287-10)** **For robots with protection type Foundry Plus (option 287-3)** **For robots with with protection type Clean Room** **For robots with food grade lubrication** Check the tubular cable housing cover gasket. Replace if damaged.	Gasket for tubular cable housing cover: 3HAC056707-001 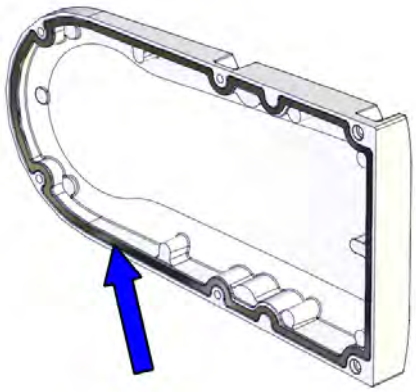 xx1400000345

Continues on next page

© Copyright 2014 - 2017 ABB. All rights reserved.

4.5.2 Replacing the swing spare parts (swing, axis-2 radial sealing)

Continued

	Action	Note
3	Refit the cover to the cable housing.	Screws: 3HAB3409-207 (M3x8). Tightening torque: 1.5 Nm. 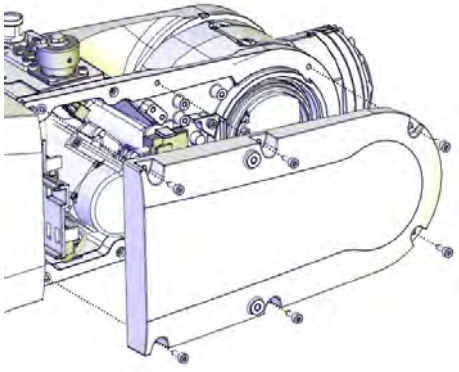 xx1300002389 **Note** Only use specified screws, never replace them with other screws.
4	Clean Room robots: seal and paint the joints that have been opened. See *Replacing parts on the robot on page 138* **Note** After all repair work, wipe the robot free from particles with spirit on a lint free cloth.	

Concluding procedure

	Action	Note
1	**For robots with protection class IP67 (option 287-10)** **For robots with protection type Foundry Plus (option 287-3)** **For robots with with protection type Clean Room** **For robots with food grade lubrication** Check the gasket. Replace if damaged.	Housing cover gasket (IRB 1200-7/0.7): 3HAC056698-001 Housing cover gasket (IRB 1200-5/0.9): 3HAC056697-001 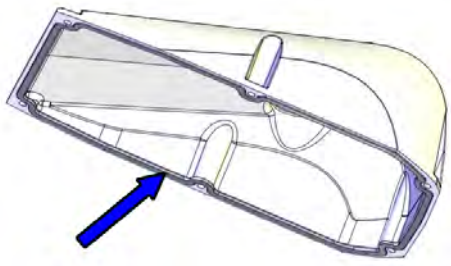 xx1400000477

Continues on next page

© Copyright 2014 - 2017 ABB. All rights reserved.

	Action	Note
2	Refit the upper arm housing cover with the screws. **CAUTION** **For robots with safety lamp (option)** Reconnect the lamp cable connectors R3.H1 and R3.H2 and then secure the cover.	Screws: 3HAB3409-207 (M3x8). Tightening torque: 1.5 Nm. 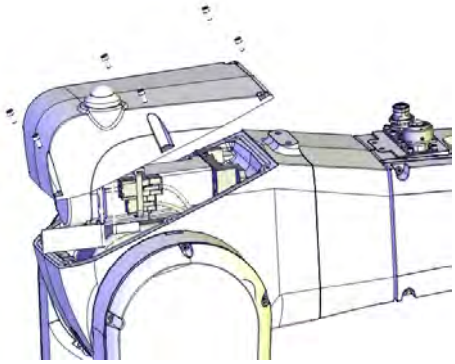 xx1300000456 **Note** Only use specified screws, never replace them with other screws.
3	**For robots with protection type Clean Room** Apply a string of the sealant Sikaflex 521FC to the joint of the upper arm housing cover. Smooth out the sealant string using a finger tip. Use washing-up on finger tips to get a smooth joint. If necessary, add extra sealant to get a full cover joint.	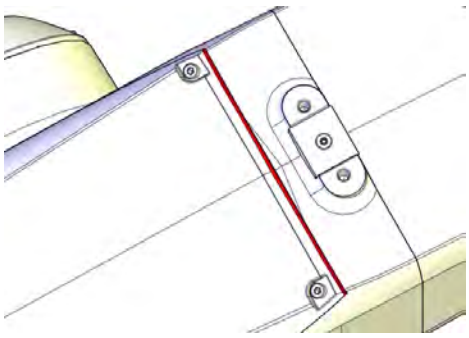 xx1600000215
4	Recalibrate the robot.	Calibration is detailed in section *Calibration on page 733*.
5	For robots with protection type Clean Room: Clean and paint the joints that have been opened. See *Replacing parts on the robot on page 138* **Note** After all repair work, wipe the Clean Room robot free from particles with spirit on a lint free cloth.	
6	**DANGER** Make sure all safety requirements are met when performing the first test run. These are further detailed in the section *DANGER - First test run may cause injury or damage! on page 48*.	

© Copyright 2014 - 2017 ABB. All rights reserved.

4.5.3 Replacing the axis-1 mechanical stop

Location of the mechanical stop

The axis-1 mechanical stop is located as shown in the figure.

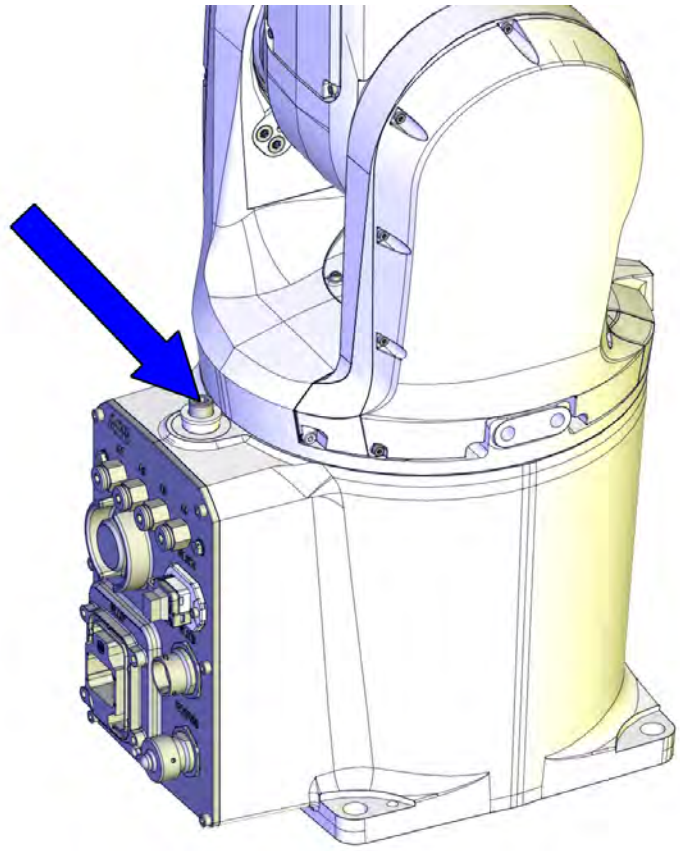

xx1400000391

Required spare parts

Note

The spare part numbers that are listed in the table can be out of date. See the latest revision of *Product manual, spare parts - IRB 1200* on ABB Library.

Spare part	Article number	Note
Mechanical stop set, axis 1	3HAC049630-001	Includes mechanical stop pin (1 pc), washer and screw.

Required tools and equipment

Equipment, etc.	Article number	Note
Standard toolkit	-	Content is defined in section *Standard toolkit on page 808*.

Continues on next page

© Copyright 2014 - 2017 ABB. All rights reserved.

Replacing the mechanical stop

Use these procedures to remove the axis-1 mechanical stop.

Preparations before removing the mechanical stop

	Action	Note
1	Jog the robot to a position where the mechanical stop is most easily accessed.	
2	**DANGER** Turn off all: • electric power supply • hydraulic pressure supply • air pressure supply to the robot, before entering the robot working area.	

Replacing the axis-1 mechanical stop

	Action	Note
1	**DANGER** Make sure that all supplies for electrical power, hydraulic pressure, and air pressure are turned off.	
2	**CAUTION** For robots with protection type Clean Room: Always cut the paint with a knife and grind the paint edge when disassembling parts of the robot! See *Replacing parts on the robot on page 138*	

Continues on next page

© Copyright 2014 - 2017 ABB. All rights reserved.

4.5.3 Replacing the axis-1 mechanical stop

Continued

	Action	Note
3	Remove the mechanical stop by removing the screw.	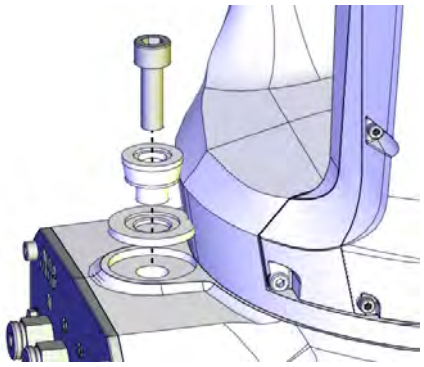 xx1400000392 Screw: 9ADA183-37 (M8x25). Tightening torque: 12 Nm. **Note** Only use specified screws, never replace them with other screws.
4	Discard the old screw and washer.	
5	Clean Room robots: clean the joints that have been opened. See *Replacing parts on the robot on page 138*	
6	Refit and secure the new stop with the enclosed screw and washer.	
7	For robots with protection type Clean Room: Clean and paint the joints that have been opened. See *Replacing parts on the robot on page 138* **Note** After all repair work, wipe the Clean Room robot free from particles with spirit on a lint free cloth.	
8	**DANGER** Make sure all safety requirements are met when performing the first test run. These are further detailed in the section *DANGER - First test run may cause injury or damage! on page 48*.	

© Copyright 2014 - 2017 ABB. All rights reserved.

4.6 Motors and gearboxes

4.6.1 Replacing the axis-1 gear unit

Part of complete base

The axis-1 gear unit and axis-1 motor is part of the complete base spare part assembly, see *Replacing the base spare parts (base, axis-1 radial sealing, protection sleeve) on page 442*.

© Copyright 2014 - 2017 ABB. All rights reserved.

4.6.2 Replacing the axis-2 drive unit

Location of the drive unit

The axis-2 drive unit is located as shown in the figure.

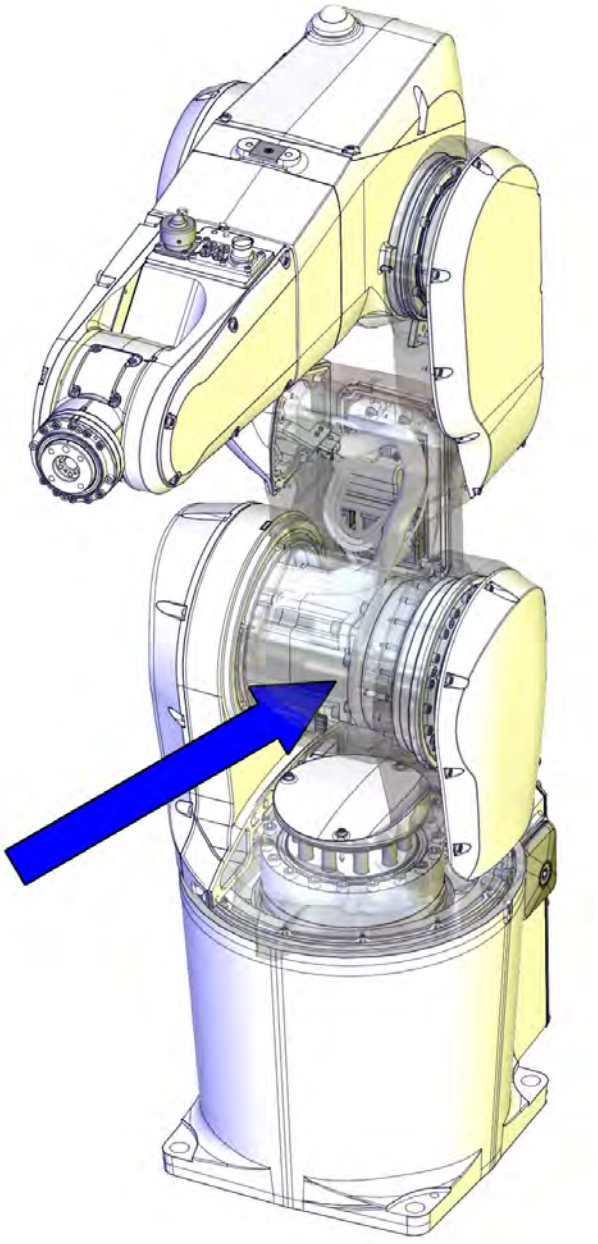

xx1300002547

Required spare parts

Note

The spare part numbers that are listed in the table can be out of date. See the latest revision of *Product manual, spare parts - IRB 1200* on ABB Library.

Continues on next page

© Copyright 2014 - 2017 ABB. All rights reserved.

Spare part	Article number	Note
Drive unit	3HAC049645-001	Includes axis-2 gearbox, AC motor with encoder interface and motor adapter.
Drive unit, food grade lubrication	3HAC057903-001	Used for robots with food grade lubrication. Includes axis-2 gearbox, AC motor with encoder interface and motor adapter.
Drive unit, SafeMove 2-supported	3HAC061273-001	Used for IRB 1200 Type B. See *Type B of IRB 1200 on page 792*. Includes axis-2 gearbox, AC motor with resolver interface and motor adapter.
Drive unit, food grade lubrication and SafeMove 2-supported.	3HAC061274-001	Used for IRB 1200 Type B. See *Type B of IRB 1200 on page 792*. Used for robots with food grade lubrication. Includes axis-2 gearbox, AC motor with resolver interface and motor adapter.
O-ring	3HAC048939-001	Replace if damaged.
M2 variseal sealing	3HAC044641-003	Used with protection class IP67. Used with protection type Foundry Plus. Replace if damaged.
Gasket on swing cover	3HAC056727-001	Not used with protection class IP40. Replace if damaged.
Gasket on cable housing cover	3HAC056726-001	Not used for robots with protection class IP40. Replace if damaged.

Required tools and equipment

Equipment, etc.	Article number	Note
Roundsling, 2 m	-	Length: 2 m. Lifting capacity: 100 kg.
Guide pin for axis-2 gear unit	3HAC049704-001	Always use three guide pins together!
24 VDC power supply	-	Used to release the motor brakes.
Calibration toolkit, manual calibration	3HAC051256-001	Includes calibration tools, pins and attachment screws for manual calibration method. [i]
Standard toolkit	-	Content is defined in section *Standard toolkit on page 808*.

[i] The robot is calibrated by either manual calibration or Axis Calibration at factory. Always use the same calibration method as used at the factory.
Information about valid calibration method is found on the calibration label or in the calibration menu on the FlexPendant.
If no data is found related to standard calibration, manual calibration is used as default.

Continues on next page

© Copyright 2014 - 2017 ABB. All rights reserved.

4.6.2 Replacing the axis-2 drive unit
Continued

Required consumables

Consumable	Art. no.	Note
Cable straps	-	
Cleaning agent	-	Loctite 7063
Flange sealing	12340011-116	Loctite 574
Locking liquid	3HAB7116-1	Loctite 243
Harmonic grease 4B No. 2	3HAC037302-001	Total amount: 60 g. Used to lubricate the gearbox. The gear is pre-filled at delivery but grease may need to be added depending on the actual condition.
LUBRIPLATE SYNXTREME FG-0	3HAC043771-001	Total amount: 60 g. Used to lubricate the gearbox of robots with food grade lubrication. The gear is pre-filled at delivery but grease may need to be added depending on the actual condition.

Deciding calibration routine

Decide which calibration routine to be used, based on the information in the table. Depending on which routine is chosen, action might be required prior to beginning the repair work of the robot, see the table.

	Action	Note
1	Decide which calibration routine to use for calibrating the robot. • Reference calibration. External cable packages (DressPack) and tools can stay fitted on the robot. • Fine calibration. All external cable packages (DressPack) and tools must be removed from the robot.	**Note** Calibrating axis 6 always requires tools to be removed from the mounting flange (also for reference calibration) since the mounting flange is used for installation of the calibration tool.
	If the robot is to be calibrated with reference calibration: Find previous reference values for the axis or create new reference values. These values are to be used after the repair procedure is completed, for calibration of the robot. If no previous reference values exist, and no new reference values can be created, then reference calibration is not possible.	Follow the instructions given in the reference calibration routine on the FlexPendant to create reference values. Creating new values requires possibility to move the robot. Read more about reference calibration for Axis Calibration in *Reference calibration routine on page 743*.
	If the robot is to be calibrated with fine calibration: Remove all external cable packages (DressPack) and tools from the robot.	

Continues on next page

© Copyright 2014 - 2017 ABB. All rights reserved.

Removing the drive unit

Use these procedures to remove the axis-2 drive unit.

Preparations before removing the axis-2 drive unit

	Action	Note
1	Decide which calibration routine to use, and take actions accordingly prior to beginning the repair procedure.	
2	Jog all axes to zero position.	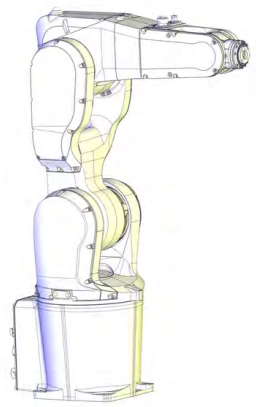 xx1300002581
3	**DANGER** Turn off all: • electric power supply • hydraulic pressure supply • air pressure supply to the robot, before entering the robot working area.	
4	**CAUTION** The lower and upper arms together weigh 30 kg. All lifting accessories used must be sized accordingly!	
5	Fit a roundsling to the upper arm to support the weight of the upper and lower arm. (no force)	

Loosening the cabling in the swing

	Action	Note
1	**DANGER** Make sure that all supplies for electrical power, hydraulic pressure, and air pressure are turned off.	

Continues on next page

© Copyright 2014 - 2017 ABB. All rights reserved.

4.6.2 Replacing the axis-2 drive unit

Continued

	Action	Note
2	**CAUTION** For robots with protection type Clean Room: Always cut the paint with a knife and grind the paint edge when disassembling parts of the robot! See *Replacing parts on the robot on page 138*	
3	**For robots with protection type Clean Room** Remove the swing sealing plug. Follow the procedure specified in *Removing the swing sealing plug on page 144*.	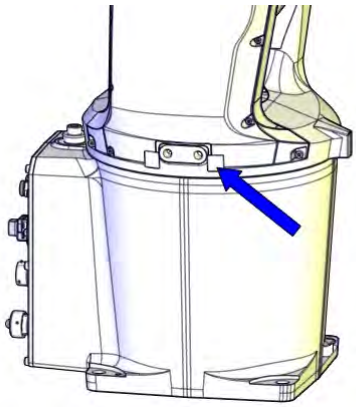 xx1600000205
4	Remove the cable housing cover of the swing by removing the screws.	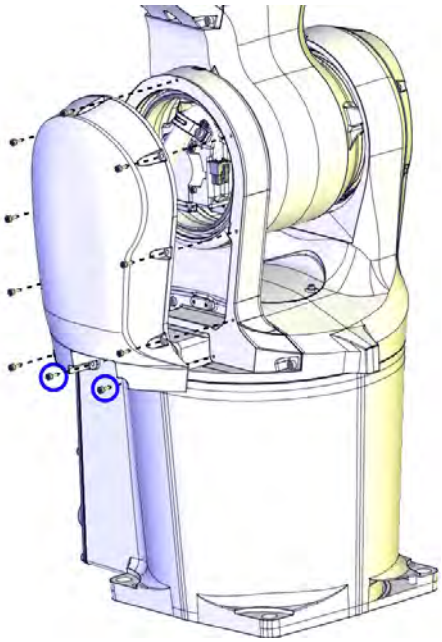 xx1300002431

Continues on next page

© Copyright 2014 - 2017 ABB. All rights reserved.

	Action	Note
5	Cut the cable straps.	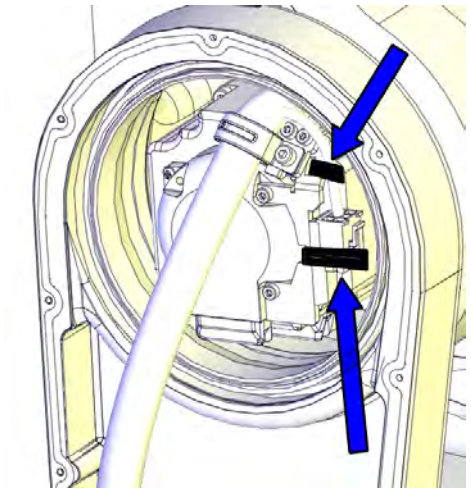 xx1400001528
6	Remove the axis-2 motor bracket screws.	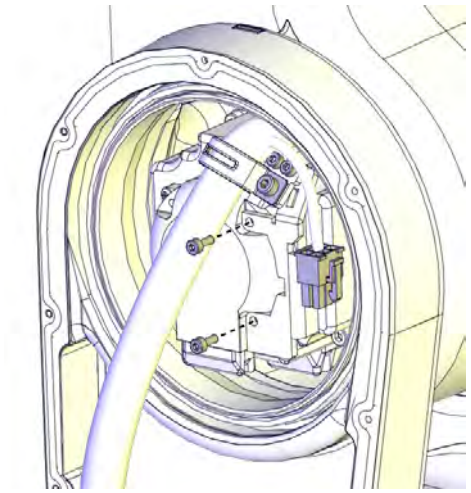 xx1300002432
7	Disconnect the motor connectors. • R2.ME2 • R2.MP2	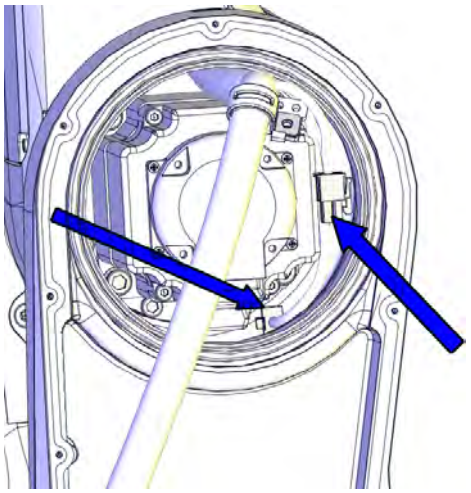 xx1300002434

Continues on next page

© Copyright 2014 - 2017 ABB. All rights reserved.

4.6.2 Replacing the axis-2 drive unit

Continued

	Action	Note
8	Pull out the cable harness slightly from the lower arm housing. **Note** The cabling is still connected inside the robot, so be careful not to strain the cables!	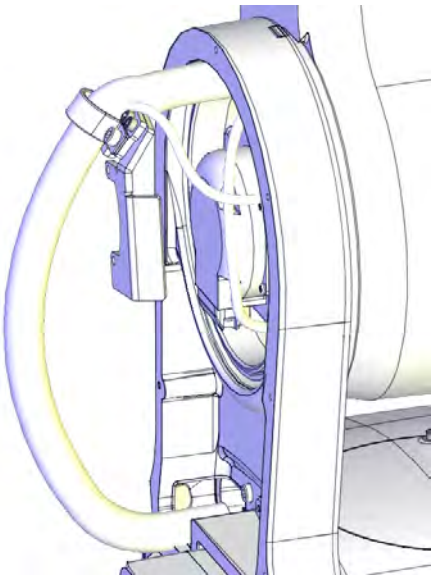 xx1300002548
9	Loosen the cable housing of the swing by removing the screws, and tilt it outwards. **CAUTION** Make sure that the sealing in the cable housing does not get damaged when the cable housing is hanging on the cable.	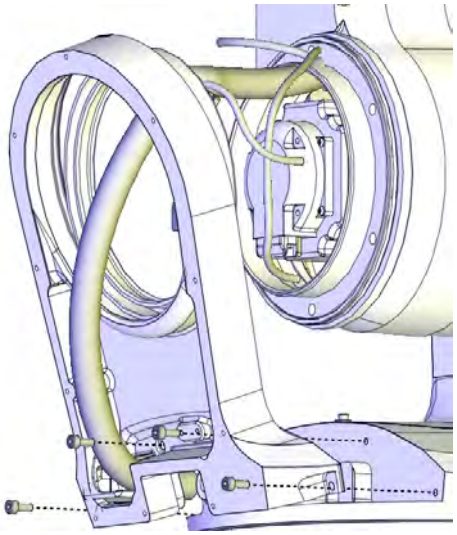 xx1300002549

Removing the lower arm

	Action	Note
1	**DANGER** Make sure that all supplies for electrical power, hydraulic pressure, and air pressure are turned off.	

Continues on next page

© Copyright 2014 - 2017 ABB. All rights reserved.

	Action	Note
2	**CAUTION** For robots with protection type Clean Room: Always cut the paint with a knife and grind the paint edge when disassembling parts of the robot! See *Replacing parts on the robot on page 138*	
3	Remove the swing cover.	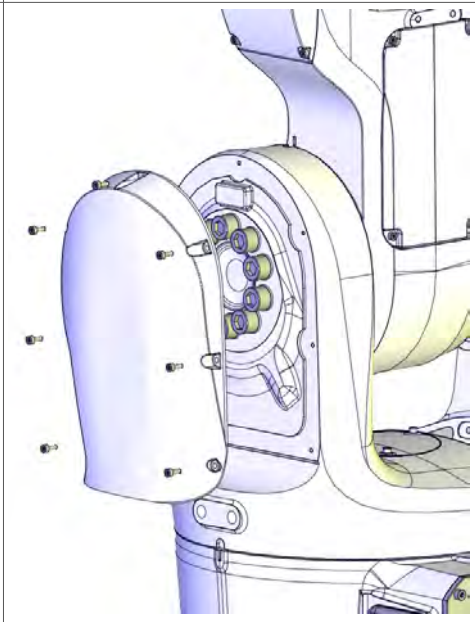 xx1300002551
4	Remove the lower arm screws and washers. **WARNING** This releases the lower arm from the swing. Make sure the weight of the arm is properly secured. The lower arm weighs 13 kg. If the upper arm is also attached to the lower arm, it adds an additional 17 kg to the total weight.	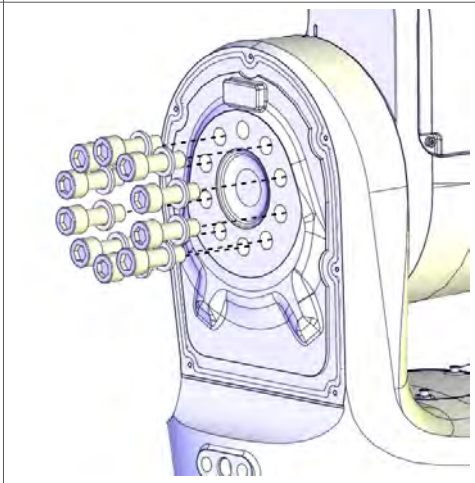 xx1300002552

Continues on next page

© Copyright 2014 - 2017 ABB. All rights reserved.

4.6.2 Replacing the axis-2 drive unit

Continued

	Action	Note
5	Fit guide pins to the gearbox.	Guide pin for axis-2 gear unit: 3HAC049704-001 Always use three guide pins together! 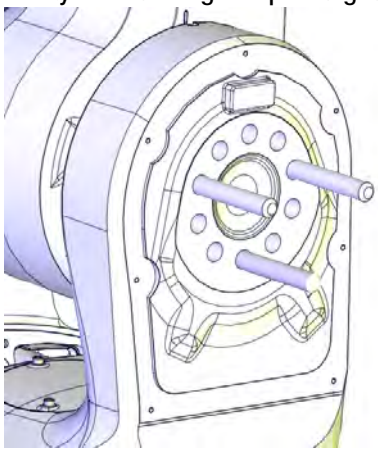 xx1300002563
6	Separate the lower arm from the swing. **Tip** If the lower arm is hard to loosen from the swing, two of the lower arm screws can be refitted in their attachment holes. Leave some space between the screw head and the swing casting. Then use a plastic hammer to knock on the screws lightly and evenly.	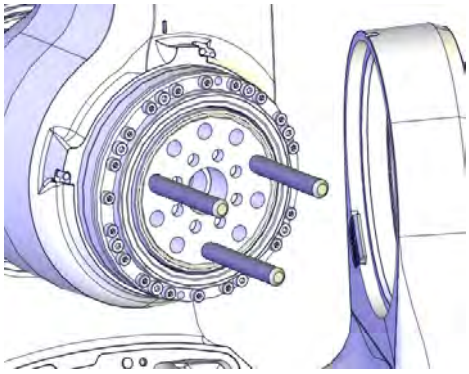 xx1300002553

Removing the axis-2 drive unit

	Action	Note
1	**DANGER** Make sure that all supplies for electrical power, hydraulic pressure, and air pressure are turned off.	
2	**CAUTION** For robots with protection type Clean Room: Always cut the paint with a knife and grind the paint edge when disassembling parts of the robot! See *Replacing parts on the robot on page 138*	

Continues on next page

© Copyright 2014 - 2017 ABB. All rights reserved.

	Action	Note
3	**CAUTION** The lower and upper arms together weigh 30 kg. All lifting accessories used must be sized accordingly!	
4	If there is enough space on the site, lay down the lower arm on a workbench. Make sure to support the gravity center of the lower arm. If the site is cramp, the procedure can be performed having the lower arm hanging in the lifting slings. If removing the axis-2 drive unit from a hanging lower arm, it is best performed by two persons working together: • Person 1: Hold the lower arm still. • Person 2: Remove the drive unit screws according to step below.	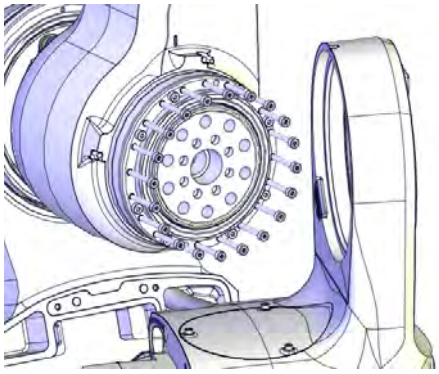 xx1300002554
5	Remove the grey screws from the drive unit. **WARNING** Keep the eight black screws fitted. They hold the gearbox together. Removing them can damage the gearbox severely.	
6	Insert two M4 screws to the press out holes and press out the drive unit.	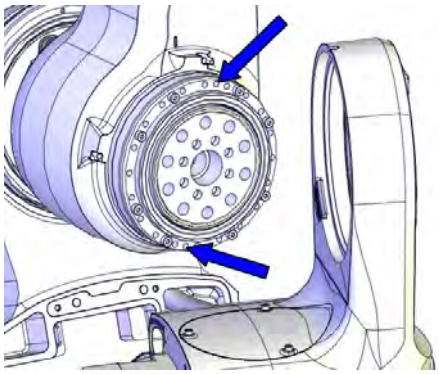 xx1400000008
7	Carefully pull out the complete drive unit.	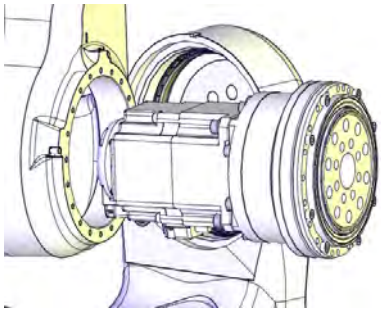 xx1300002555

Continues on next page

© Copyright 2014 - 2017 ABB. All rights reserved.

4.6.2 Replacing the axis-2 drive unit
Continued

Refitting the drive unit

Use these procedures to refit the axis-2 drive unit.

Refitting the axis-2 drive unit

	Action	Note
1	Clean Room robots: clean the joints that have been opened. See *Replacing parts on the robot on page 138*	
2	Check if there is a sufficient amount of grease on the gear. Apply more grease, if needed.	Harmonic grease 4B No. 2: 3HAC037302-001. LUBRIPLATE SYNXTREME FG-0: 3HAC043771-001 (for robots with food grade lubrication).
3	**For robots with protection class IP67 (option 287-10)** **For robots with protection type Foundry Plus (option 287-3)** Remove residual locking liquid and other pollutants with cleaning agent Loctite 7063. Apply flange sealing Loctite 574 on the mounting surfaces of the lower arm. **Note** For Clean Room robots, wipe clean the overflowing Loctite 574 if there is any.	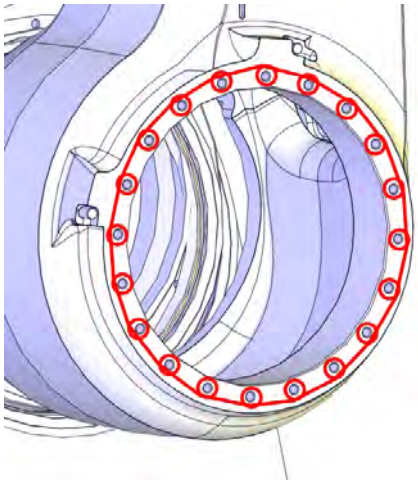 xx1400000006

Continues on next page

© Copyright 2014 - 2017 ABB. All rights reserved.

	Action	Note
4	Carefully insert the complete drive unit. **Note** Pay attention to the relative position between the motor connector block and the lower arm, so that the drive unit is positioned correctly inside the lower arm. 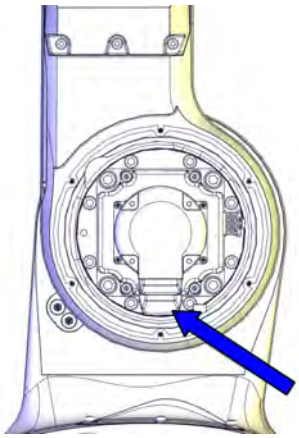 xx1400000795 The figure shows the position of the motor connector block when axis 2 is in position 0°.	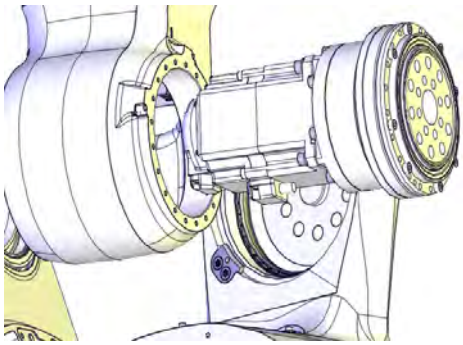 xx1300002580
5	If the gear is refitted in a hanging lower arm, this step requires two persons. • Person 1: Hold the lower arm still. • Person 2: Refit the drive unit screws. Secure the screws but do not tighten yet.	Screws: 3HAB3409-239 (M4x35). 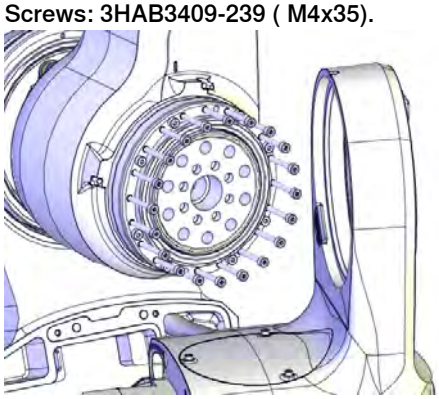 xx1300002554 **Note** Only use specified screws, never replace them with other screws.
6	If the drive unit is refitted in a hanging lower arm, this step requires two persons. • Person 1: Hold the lower arm still. • Person 2: Tighten the screws.	Tightening torque: 5 Nm

Continues on next page

© Copyright 2014 - 2017 ABB. All rights reserved.

4.6.2 Replacing the axis-2 drive unit

Continued

	Action	Note
7	Clean Room robots: seal and paint the joints that have been opened. See *Replacing parts on the robot on page 138* **Note** After all repair work, wipe the robot free from particles with spirit on a lint free cloth.	

Refitting the lower arm

	Action	Note
1	For robots with protection type Clean Room: clean the joints that have been opened. See *Replacing parts on the robot on page 138*	
2	Check the o-ring. Replace if damaged.	O-ring: 3HAC048939-001 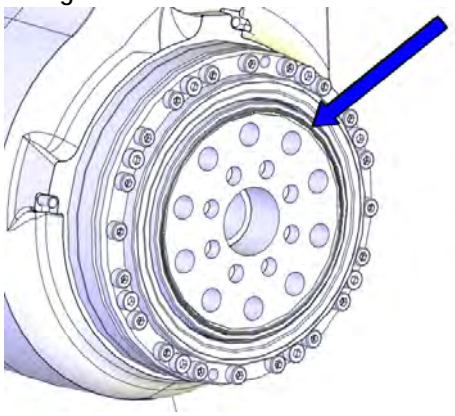 xx1300002556
3	Remove residual locking liquid and other pollutants with cleaning agent Loctite 7063. Apply flange sealing Loctite 574 to the cylindrical surface in the swing. **Note** For Clean Room robots, wipe clean the overflowing Loctite 574 if there is any.	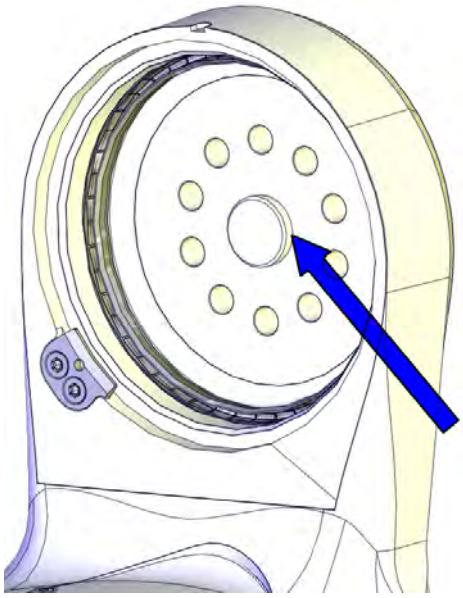 xx1400001403

Continues on next page

© Copyright 2014 - 2017 ABB. All rights reserved.

	Action	Note
4	Fit guide pins to the gearbox.	Guide pin for axis-2 gear unit: 3HAC049704-001 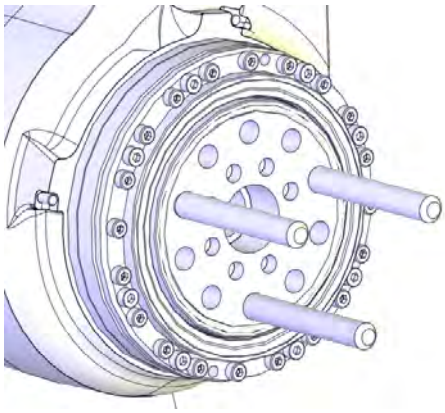 xx1300002562 Always use three guide pins together!
5	**For robots with protection class IP67 (option 287-10)** **For robots with protection type Foundry Plus (option 287-3)** Check the sealing. Replace if damaged. **CAUTION** Do not fit M2 variseal sealing on Clean Room robots.	M2 variseal sealing: 3HAC044641-003 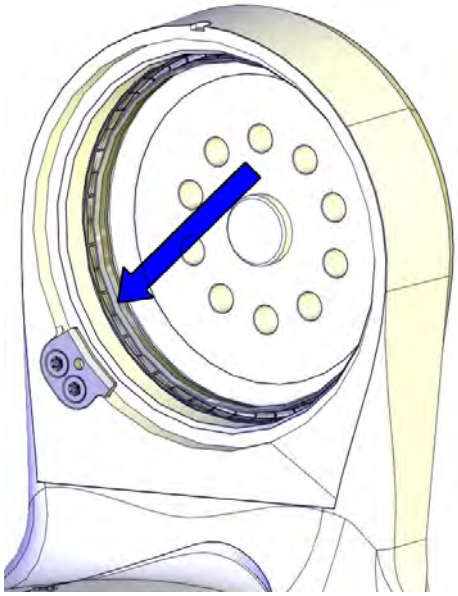 xx1400000453
6	Fit the lower arm to the swing, with guidance from the guide pins.	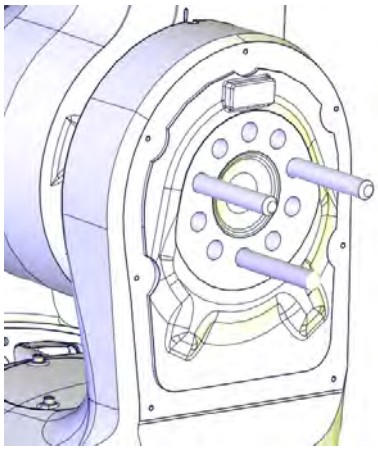 xx1300002563

Continues on next page

© Copyright 2014 - 2017 ABB. All rights reserved.

4.6.2 Replacing the axis-2 drive unit

Continued

	Action	Note
7	Refit the lower arm screws and washers, using locking liquid Loctite 243. Secure the screws but do not tighten yet.	Screws: 3HAB3409-51 (M10x30). 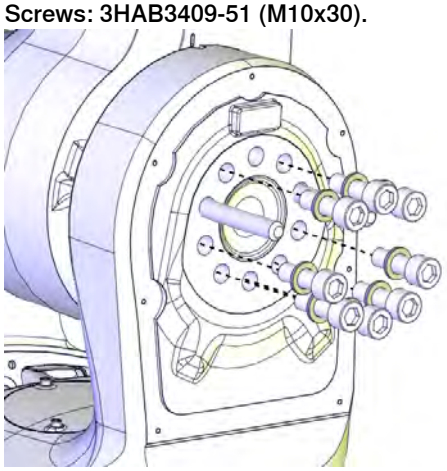 xx1300002564 **Note** Only use specified screws, never replace them with other screws.
8	Remove the guide pins and refit the remaining screws and washers using locking liquid Loctite 243.	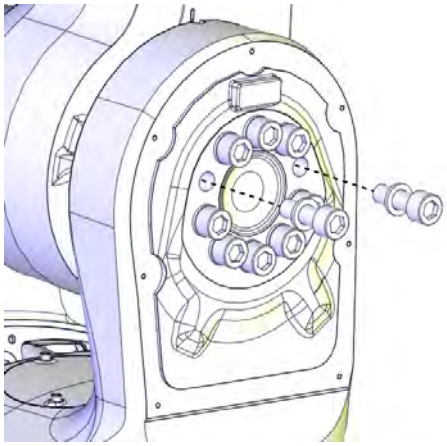 xx1300002565
9	Tighten all screws.	Tightening torque: 45 Nm

Continues on next page

© Copyright 2014 - 2017 ABB. All rights reserved.

	Action	Note
10	**For robots with protection class IP67 (option 287-10)** **For robots with protection type Foundry Plus (option 287-3)** **For robots with with protection type Clean Room** **For robots with food grade lubrication** Check the swing cover gasket. Replace if damaged.	Gasket on swing cover: 3HAC056727-001 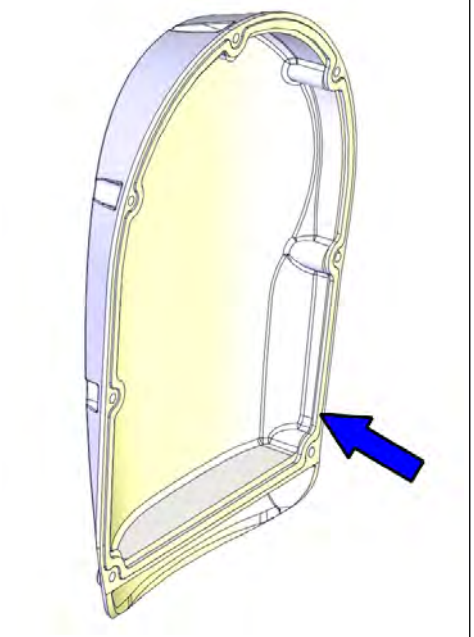 xx1400000007
11	Refit the swing cover. Replace if damaged.	Screws: 3HAB3409-207 (M3x8). Tightening torque: 1.5 Nm. Swing cover: 3HAC059676-001 : 3HAC056215-001 (used with protection type Clean Room) Swing cover, Clean Room Swing cover, food grade lubrication 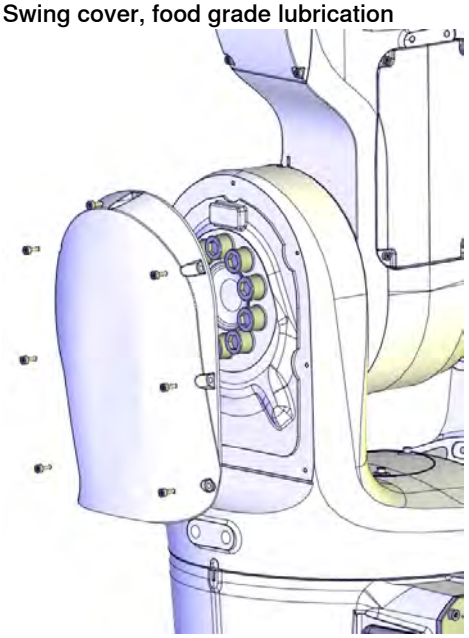 xx1300002551

Continues on next page

© Copyright 2014 - 2017 ABB. All rights reserved.

4.6.2 Replacing the axis-2 drive unit

Continued

	Action	Note
12	**For robots with protection type Foundry Plus (option 287-3)** Check the protection plugs for lifting holes. Replace if damaged.	Protection plug for lifting holes: 3HAC4836-24 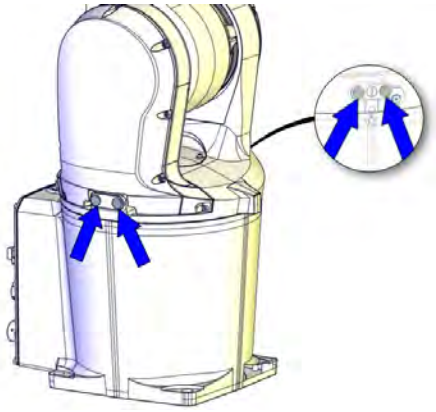 xx1600001151
13	**For robots with protection type Clean Room** Apply a string of the sealant Sikaflex 521FC to the joint of the swing cover. Smooth out the sealant string using a finger tip. Use washing-up on finger tips to get a smooth joint. If necessary, add extra sealant to get a full cover joint.	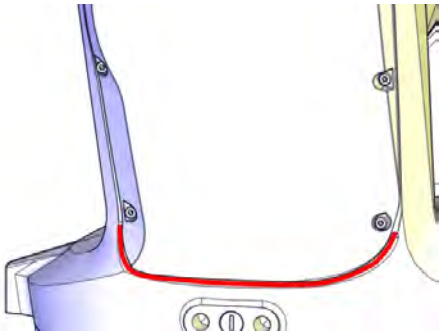 xx1600000217
14	**For robots with protection type Foundry Plus (option 287-3)** If required, fit two screws for protection.	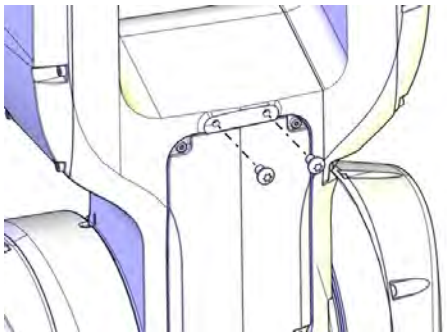 xx1600001154
15	For robots with protection type Clean Room: seal and paint the joints that have been opened. See *Replacing parts on the robot on page 138* **Note** After all repair work, wipe the robot free from particles with spirit on a lint free cloth.	

Continues on next page

© Copyright 2014 - 2017 ABB. All rights reserved.

Securing the cabling to the swing

	Action	Note
1	Clean Room robots: clean the joints that have been opened. See *Replacing parts on the robot on page 138*	
2	Refit the cable housing to the swing with the screws.	Tightening torque: 3 Nm. 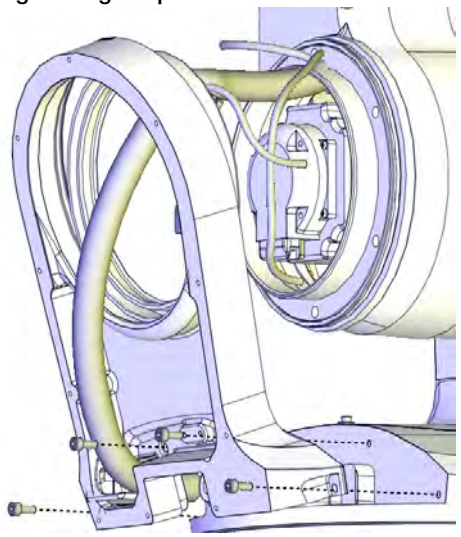 xx1300002549
3	Insert the cable harness into the lower arm.	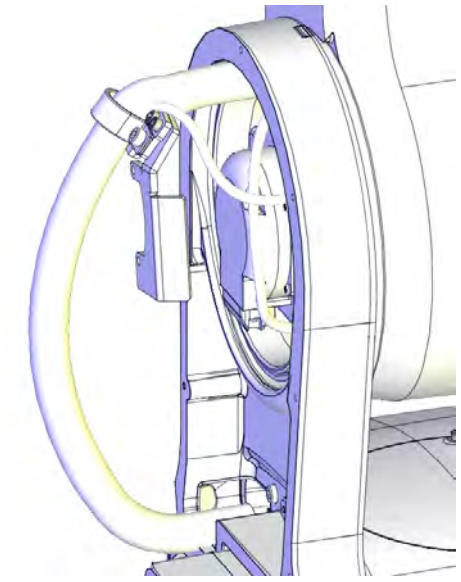 xx1300002548

Continues on next page

© Copyright 2014 - 2017 ABB. All rights reserved.

4.6.2 Replacing the axis-2 drive unit

Continued

	Action	Note
4	Reconnect the motor connectors. • R2.ME2 • R2.MP2	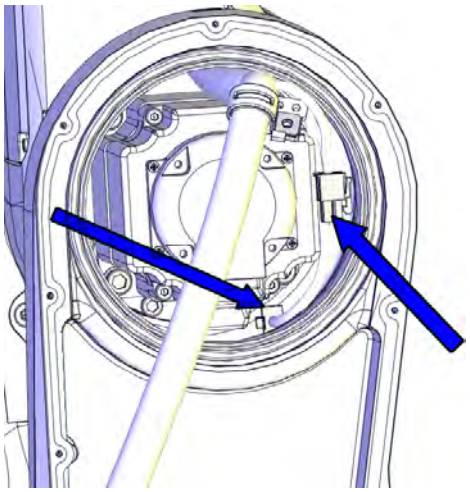 xx1300002434
5	Refit the axis-2 motor bracket with the screws.	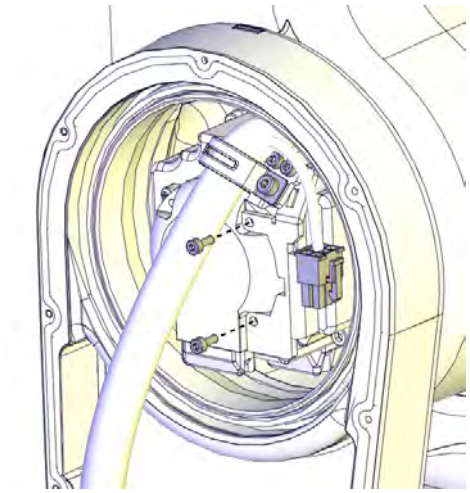 xx1300002432
6	Secure the connector R2.MP2 and its cable with cable straps onto the motor bracket. Make sure the connector is fixed by its tab to the bracket.	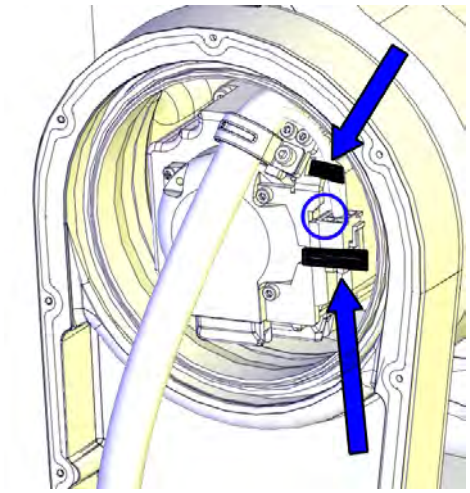 xx1400001529

Continues on next page

© Copyright 2014 - 2017 ABB. All rights reserved.

	Action	Note
7	**For robots with protection class IP67 (option 287-10)** **For robots with protection type Foundry Plus (option 287-3)** **For robots with with protection type Clean Room** **For robots with food grade lubrication** Check the gasket of the cable housing cover. Replace if damaged.	Gasket on cable housing cover: 3HAC056726-001
8	Check the PTFE film. Replace if damaged.	PTFE film on cable housing cover: 3HAC044660-001
9	Apply grease to the inner surface of the cable housing cover and the PTFE film surface.	
10	Refit the cable housing cover with the screws. **Note** Remember to refit the two lower screws shown in the figure.	Cable housing cover of the swing: 3HAC059678-001 : 3HAC056214-001 (used with protection type Clean Room) Cable housing cover of the swing, Clean Room Cable housing cover of the swing, food grade lubrication Screws: 3HAB3409-207 (M3x8). Tightening torque: 1.5 Nm. 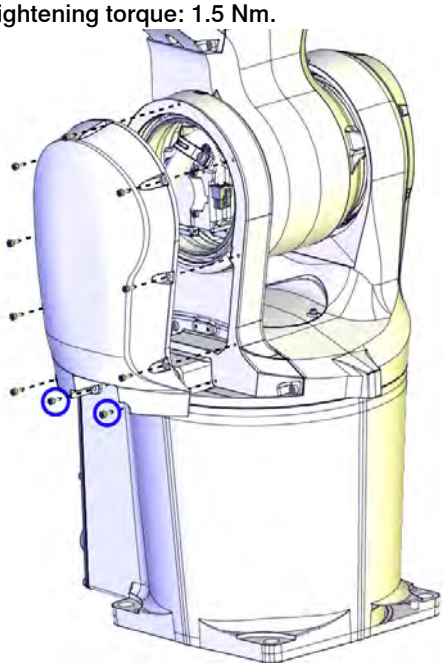 xx1300002431 **Note** Only use specified screws, never replace them with other screws.

Continues on next page

© Copyright 2014 - 2017 ABB. All rights reserved.

4.6.2 Replacing the axis-2 drive unit

Continued

	Action	Note
11	**For robots with with protection type Clean Room** **For robots with food grade lubrication** Refit the swing sealing plug. Follow the procedure specified in *Refitting the swing sealing plug on page 145*.	Swing sealing plug:3HAC053687-001 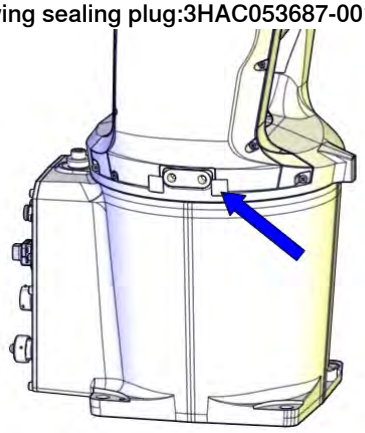 xx1600000205
12	Clean Room robots: seal and paint the joints that have been opened. See *Replacing parts on the robot on page 138* **Note** After all repair work, wipe the robot free from particles with spirit on a lint free cloth.	

Concluding procedure

	Action	Note
1	Remove the lifting slings from the robot.	
2	Recalibrate the robot.	Calibration is detailed in section *Calibration on page 733*.
3	For robots with protection type Clean Room: Clean and paint the joints that have been opened. See *Replacing parts on the robot on page 138* **Note** After all repair work, wipe the Clean Room robot free from particles with spirit on a lint free cloth.	
4	**DANGER** Make sure all safety requirements are met when performing the first test run. These are further detailed in the section *DANGER - First test run may cause injury or damage! on page 48*.	

© Copyright 2014 - 2017 ABB. All rights reserved.

4.6.3 Replacing the axis-3 drive unit

Location of drive unit

The axis-3 drive unit is located as shown in the figure.

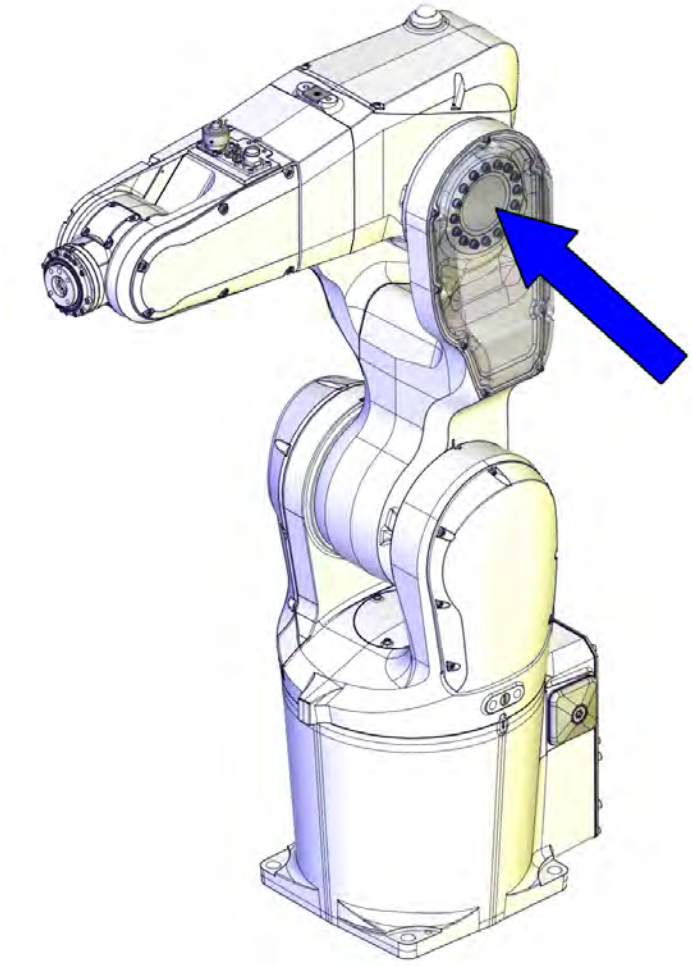

xx1300002527

Required spare parts

Note

The spare part numbers that are listed in the table can be out of date. See the latest revision of *Product manual, spare parts - IRB 1200* on ABB Library.

Spare part	Article number	Note
Drive unit	3HAC061403-001	Includes axis-3 gearbox, AC motor with encoder interface and motor adapter.

Continues on next page

© Copyright 2014 - 2017 ABB. All rights reserved.

4.6.3 Replacing the axis-3 drive unit
Continued

Spare part	Article number	Note
Drive unit, food grade lubrication	3HAC057905-001	Used for robots with food grade lubrication. Includes axis-3 gearbox, AC motor with encoder interface and motor adapter.
Drive unit, SafeMove 2-supported	3HAC061275-001	Used for IRB 1200 Type B. See *Type B of IRB 1200 on page 792*. Includes axis-3 gearbox, AC motor with resolver interface and motor adapter.
Drive unit, food grade lubrication and SafeMove 2-supported.	3HAC061276-001	Used for IRB 1200 Type B. See *Type B of IRB 1200 on page 792*. Used for robots with food grade lubrication. Includes axis-3 gearbox, AC motor with resolver interface and motor adapter.
O-ring	3HAC048939-002	Replace if damaged.
M2 variseal sealing	3HAC044641-005	Used with protection class IP67. Used with protection type Foundry Plus. Replace if damaged.
M2 variseal sealing	3HAC044641-006	Used with protection class IP67. Used with protection type Foundry Plus. Replace if damaged.
Radial sealing	3HAC024865-001	Not used with protection class IP40. Replace if damaged.
Gasket on lower arm cover	3HAC056725-001	Not used with protection class IP40. Replace if damaged.
Gasket on lower arm cable housing	3HAC044895-001	Not used with protection class IP40. Replace if damaged.
Gasket on cable housing cover	3HAC056724-001	Not used with protection class IP40. Replace if damaged.

Required tools and equipment

Equipment, etc.	Article number	Note
Guide pin for upper arm	3HAC049705-001	Always use three guide pins together!
Roundsling, 2 m	-	Length: 2 m. Lifting capacity: 100 kg.
24 VDC power supply	-	Used to release the motor brakes.
Calibration toolkit, manual calibration	3HAC051256-001	Includes calibration tools, pins and attachment screws for manual calibration method. i

Continues on next page

© Copyright 2014 - 2017 ABB. All rights reserved.

Equipment, etc.	Article number	Note
Standard toolkit	-	Content is defined in section *Standard toolkit on page 808*.

i The robot is calibrated by either manual calibration or Axis Calibration at factory. Always use the same calibration method as used at the factory.

Information about valid calibration method is found on the calibration label or in the calibration menu on the FlexPendant.

If no data is found related to standard calibration, manual calibration is used as default.

Required consumables

Consumable	Art. no.	Note
Cleaning agent	-	Isopropanol
Locking liquid	3HAB7116-1	Loctite 243
Flange sealing	12340011-116	Loctite 574 For robots with protection class IP67 (option 287-10) For robots with protection type Foundry Plus (option 287-3)
Sealant	3HAC026759-001	Sikaflex 521FC For robots with protection type Clean Room
Harmonic grease 4B No. 2	3HAC037302-001	Total amount: 32 g. Used to lubricate the gearbox. The gear is pre-filled at delivery but grease may need to be added depending on the actual condition.
LUBRIPLATE SYNXTREME FG-0	3HAC043771-001	Total amount: 32 g. Used to lubricate the gearbox of robots with food grade lubrication. The gear is pre-filled at delivery but grease may need to be added depending on the actual condition.

Deciding calibration routine

Decide which calibration routine to be used, based on the information in the table. Depending on which routine is chosen, action might be required prior to beginning the repair work of the robot, see the table.

	Action	Note
1	Decide which calibration routine to use for calibrating the robot. • Reference calibration. External cable packages (DressPack) and tools can stay fitted on the robot. • Fine calibration. All external cable packages (DressPack) and tools must be removed from the robot.	**Note** Calibrating axis 6 always requires tools to be removed from the mounting flange (also for reference calibration) since the mounting flange is used for installation of the calibration tool.

Continues on next page

© Copyright 2014 - 2017 ABB. All rights reserved.

4.6.3 Replacing the axis-3 drive unit
Continued

	Action	Note
	If the robot is to be calibrated with reference calibration: Find previous reference values for the axis or create new reference values. These values are to be used after the repair procedure is completed, for calibration of the robot. If no previous reference values exist, and no new reference values can be created, then reference calibration is not possible.	Follow the instructions given in the reference calibration routine on the FlexPendant to create reference values. Creating new values requires possibility to move the robot. Read more about reference calibration for Axis Calibration in *Reference calibration routine on page 743*.
	If the robot is to be calibrated with fine calibration: Remove all external cable packages (DressPack) and tools from the robot.	

Removing the drive unit

Use these procedures to remove the axis-3 drive unit.

Preparations before removing the axis-3 drive unit

	Action	Note
1	Decide which calibration routine to use, and take actions accordingly prior to beginning the repair procedure.	
2	Jog all axes to zero position.	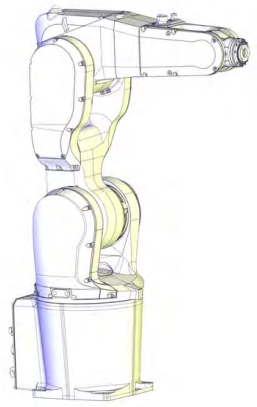 xx1300002581
3	**DANGER** Turn off all: • electric power supply • hydraulic pressure supply • air pressure supply to the robot, before entering the robot working area.	

Continues on next page

© Copyright 2014 - 2017 ABB. All rights reserved.

	Action	Note
4	**CAUTION** For robots with protection type Clean Room: Always cut the paint with a knife and grind the paint edge when disassembling parts of the robot! See *Replacing parts on the robot on page 138*	
5	Remove the cable housing cover.	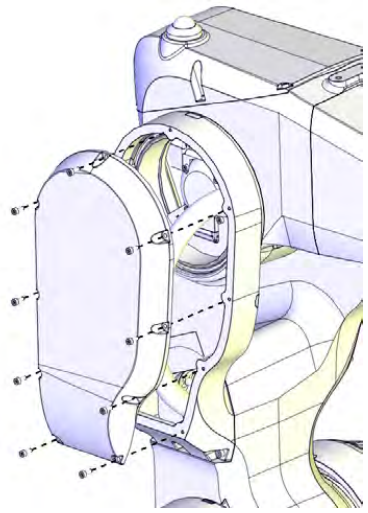 xx1300002400
6	Remove the plate.	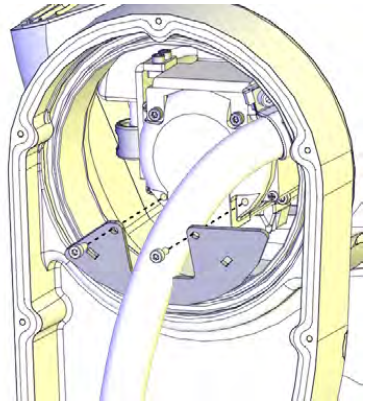 xx1300002413

Disconnecting the axis-3 motor connectors

	Action	Note
1	**DANGER** Make sure that all supplies for electrical power, hydraulic pressure, and air pressure are turned off.	

Continues on next page

© Copyright 2014 - 2017 ABB. All rights reserved.

4.6.3 Replacing the axis-3 drive unit

Continued

	Action	Note
2	Pull out the axis-3 motor connectors from the housing and disconnect them.	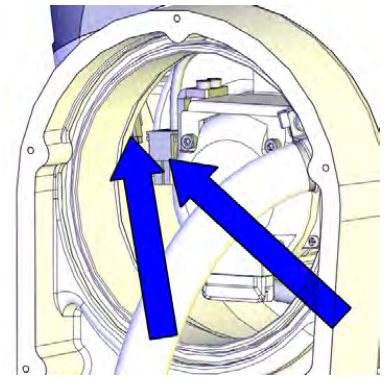 xx1300002420

Creating space for separation of upper and lower arm

	Action	Note
1	**DANGER** Make sure that all supplies for electrical power, hydraulic pressure, and air pressure are turned off.	
2	**CAUTION** For robots with protection type Clean Room: Always cut the paint with a knife and grind the paint edge when disassembling parts of the robot! See *Replacing parts on the robot on page 138*	
3	Remove the screws that fasten the fix sheet to the inner plastic guide.	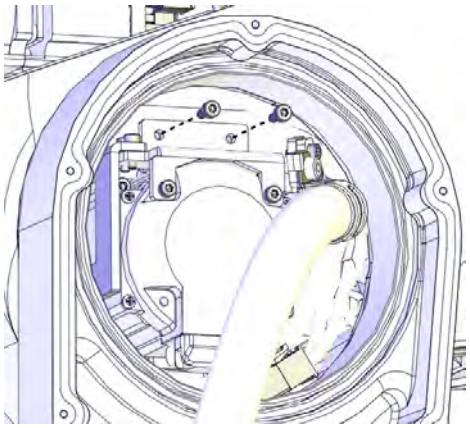 xx1300002421

Continues on next page

© Copyright 2014 - 2017 ABB. All rights reserved.

	Action	Note
4	Remove the screws that fasten the fix sheet to the motor.	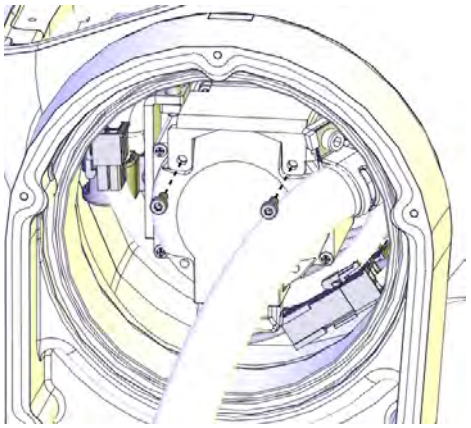 xx1300002423
5	Pull out the cable harness slightly from the upper arm housing and from the lower arm. **Note** The cabling is still connected inside the robot, so be careful not to strain the cables!	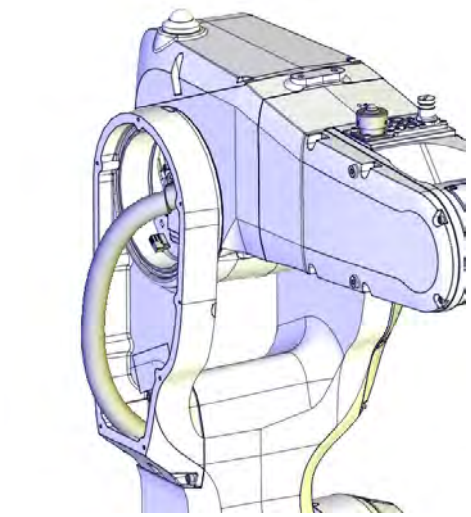 xx1300002530
6	Remove the cable housing of the lower arm by removing the screws, and tilt it outwards.	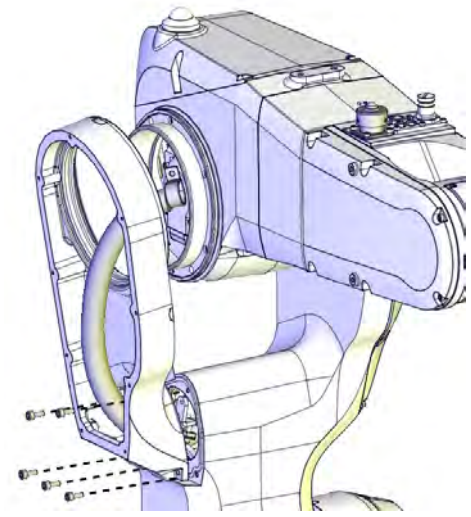 xx1400000785

Continues on next page

© Copyright 2014 - 2017 ABB. All rights reserved.

4.6.3 Replacing the axis-3 drive unit

Continued

Removing the upper arm

	Action	Note
1	**DANGER** Make sure that all supplies for electrical power, hydraulic pressure, and air pressure are turned off.	
2	**CAUTION** For robots with protection type Clean Room: Always cut the paint with a knife and grind the paint edge when disassembling parts of the robot! See *Replacing parts on the robot on page 138*	
3	Remove the lower arm cover.	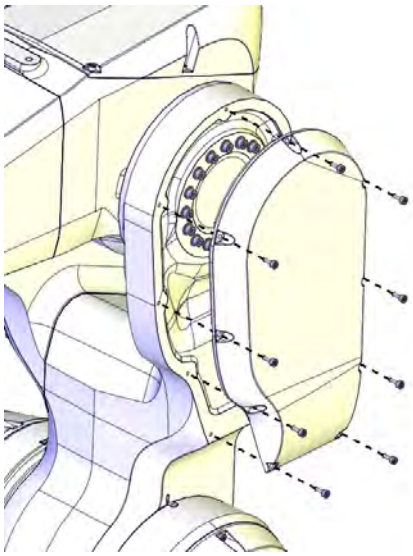 xx1300002528
4	**CAUTION** The upper arm weighs 17 kg. All lifting accessories used must be sized accordingly!	
5	Fit lifting slings to the upper arm to support the weight of the arm. (no force)	

Continues on next page

© Copyright 2014 - 2017 ABB. All rights reserved.

	Action	Note
6	Remove the upper arm screws. **WARNING** This releases the upper arm from the lower arm. Make sure the weight of the upper arm is properly secured by the lifting slings.	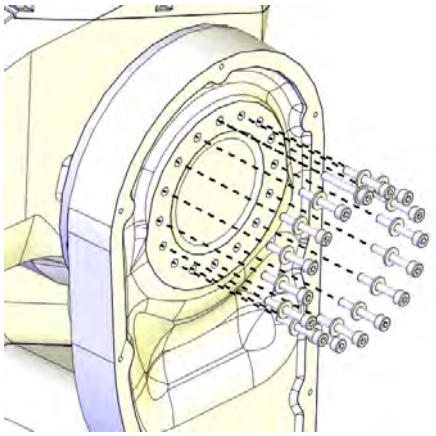 xx1300002531
7	Fit guide pins to the upper arm.	Guide pin for upper arm: 3HAC049705-001 Always use three guide pins together! 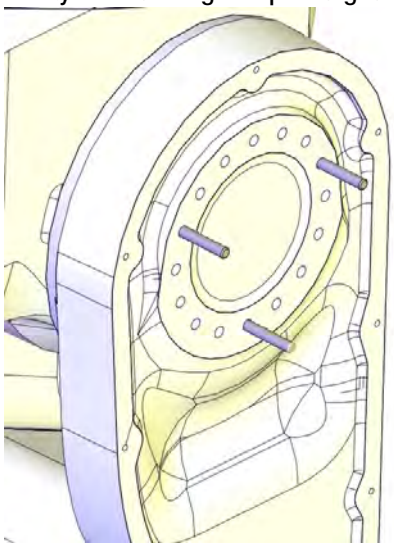 xx1400000771
8	Separate the upper and lower arm with guidance from the guide pins.	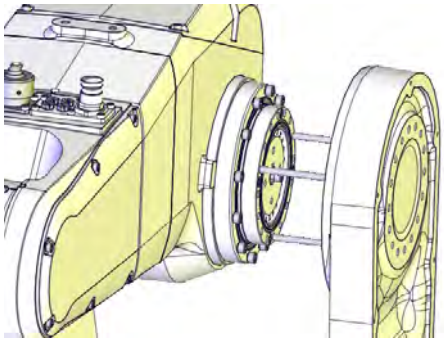 xx1300002533

Continues on next page

© Copyright 2014 - 2017 ABB. All rights reserved.

4.6.3 Replacing the axis-3 drive unit
Continued

Removing the axis-3 drive unit

	Action	Note
1	**CAUTION** For robots with protection type Clean Room: Always cut the paint with a knife and grind the paint edge when disassembling parts of the robot! See *Replacing parts on the robot on page 138*	
2	Remove the drive unit screws.	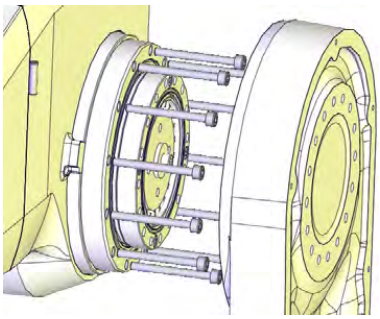 xx1300002532
3	Carefully pull out the complete drive unit. **CAUTION** The axis-3 gear unit and motor adapter are not secured to each other with screws! Be careful when handling the drive unit.	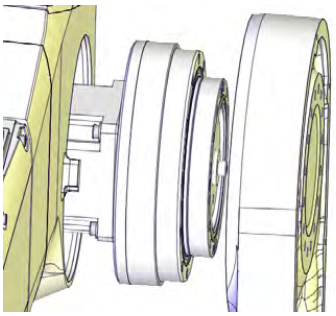 xx1300002534

Refitting the drive unit

Use this procedure to refit the axis-3 drive unit.

Refitting the axis-3 drive unit

	Action	Note
1	Clean Room robots: clean the joints that have been opened. See *Replacing parts on the robot on page 138*	
2	Check if there is a sufficient amount of grease on the gear. Apply more grease, if needed.	Harmonic grease 4B No. 2: 3HAC037302-001. LUBRIPLATE SYNXTREME FG-0: 3HAC043771-001 (for robots with food grade lubrication).

Continues on next page

© Copyright 2014 - 2017 ABB. All rights reserved.

	Action	Note
3	Check the o-ring for damage. Replace if damaged.	O-ring: 3HAC048939-002 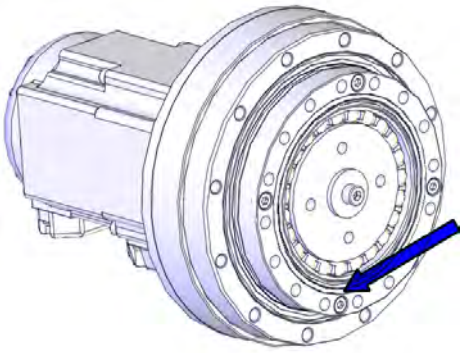 xx1400000004
4	Remove the two screws and nuts that secure the axis-3 motor adapter and gear unit to each other during transport.	
5	**For robots with protection class IP67 (option 287-10)** **For robots with protection type Foundry Plus (option 287-3)** Remove residual locking liquid and other pollutants with cleaning agent Loctite 7063. Apply flange sealing Loctite 574 on the mounting surfaces of the motor adapter. **Note** For Clean Room robots, wipe clean the overflowing Loctite 574 if there is any.	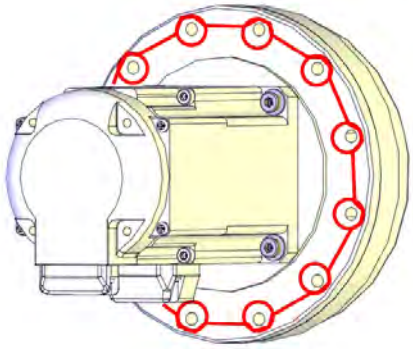 xx1400000784
6	Refit the drive unit into the upper arm. **Note** Make sure to refit the drive unit correctly oriented. When the upper arm is in its zero position (horizontal), the motor connectors should point downwards.	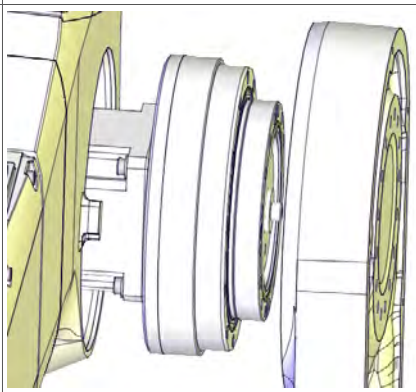 xx1300002534

Continues on next page

© Copyright 2014 - 2017 ABB. All rights reserved.

4.6.3 Replacing the axis-3 drive unit
Continued

	Action	Note
7	Refit the drive unit screws.	Screws: 3HAB3409-214 (M4x40) Tightening torque: 4.5 Nm 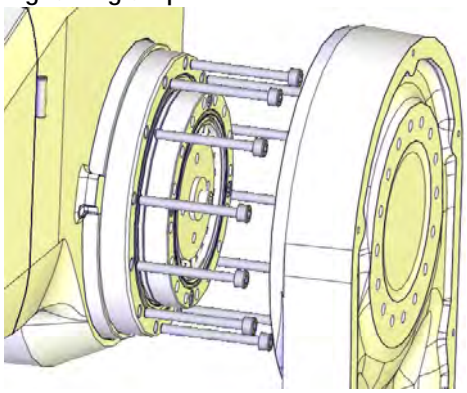 xx1300002532 **Note** Only use specified screws, never replace them with other screws.
8	Clean Room robots: seal and paint the joints that have been opened. See *Replacing parts on the robot on page 138* **Note** After all repair work, wipe the robot free from particles with spirit on a lint free cloth.	

Refitting the upper arm

	Action	Note
1	Clean Room robots: clean the joints that have been opened. See *Replacing parts on the robot on page 138*	
2	Fit guide pins to the axis-3 gear unit.	Guide pin for upper arm: 3HAC049705-001 Always use three guide pins together! 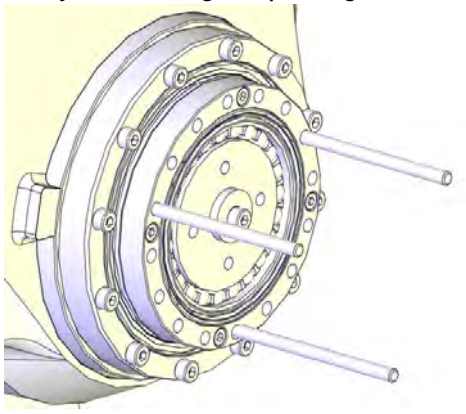 xx1400000027

Continues on next page

© Copyright 2014 - 2017 ABB. All rights reserved.

	Action	Note
3	**For robots with protection class IP67 (option 287-10)** **For robots with protection type Foundry Plus (option 287-3)** Check the sealing. Replace if damaged. **CAUTION** Do not fit M2 variseal sealing on Clean Room robots.	M2 variseal sealing: 3HAC044641-005 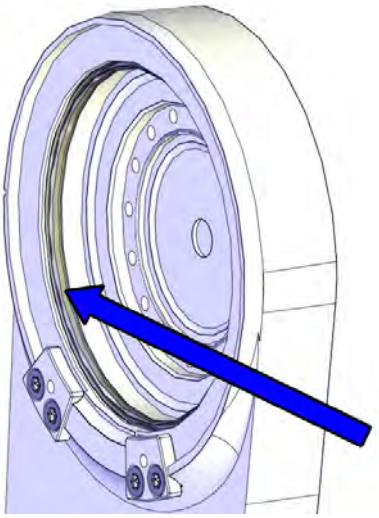 xx1400000474
4	Refit the upper arm to the lower arm and secure with the upper arm screws and washers. Do not tighten yet.	Screws: 3HAB3409-213 (M4x25). 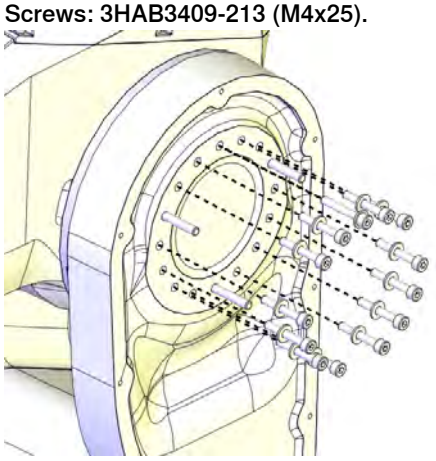 xx1400000028 **Note** Only use specified screws, never replace them with other screws.

Continues on next page

© Copyright 2014 - 2017 ABB. All rights reserved.

4.6.3 Replacing the axis-3 drive unit

Continued

	Action	Note
5	Remove the guide pins and refit the remaining screws and washers.	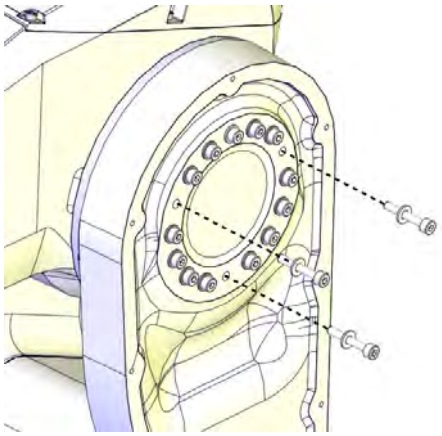 xx1400000029
6	Tighten all screws.	Tightening torque: 4.5 Nm.
7	**For robots with protection class IP67 (option 287-10)** **For robots with protection type Foundry Plus (option 287-3)** **For robots with with protection type Clean Room** **For robots with food grade lubrication** Check the lower arm cover gasket. Replace if damaged.	Gasket on lower arm cover: 3HAC056725-001 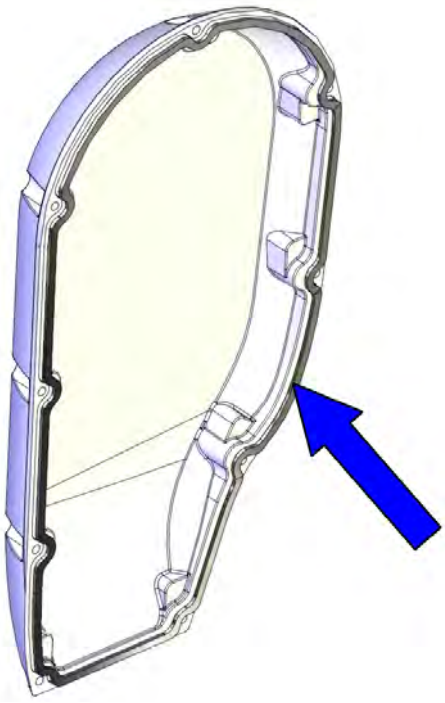 xx1400000047

Continues on next page

© Copyright 2014 - 2017 ABB. All rights reserved.

	Action	Note
8	Refit the lower arm cover.	Screws: 3HAB3409-207 (M3x8). Tightening torque: 1.5 Nm. 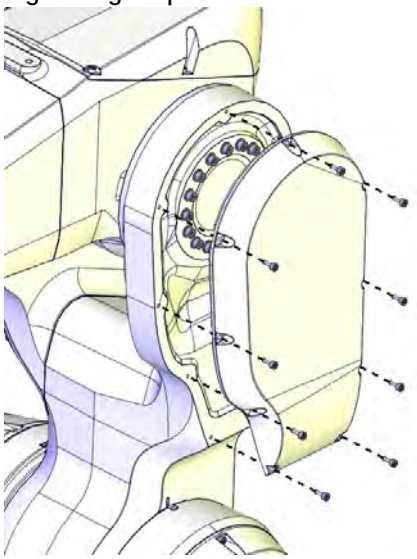 xx1300002528 **Note** Only use specified screws, never replace them with other screws.
9	**For robots with protection class IP67 (option 287-10)** **For robots with protection type Foundry Plus (option 287-3)** **For robots with with protection type Clean Room** **For robots with food grade lubrication** Check the cable housing gasket. Replace if damaged.	Gasket on lower arm cable housing: 3HAC044895-001 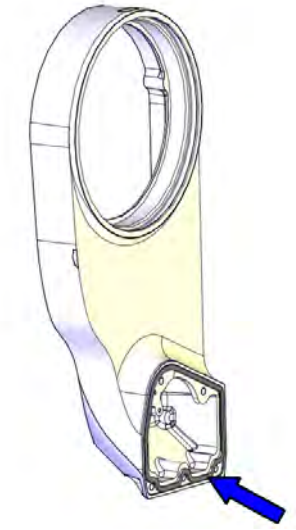 xx1400000414

Continues on next page

© Copyright 2014 - 2017 ABB. All rights reserved.

4.6.3 Replacing the axis-3 drive unit

Continued

	Action	Note
10	**For robots with protection class IP67 (option 287-10)** **For robots with protection type Foundry Plus (option 287-3)** **For robots with with protection type Clean Room** **For robots with food grade lubrication** Check the axis-3 radial sealing and the M2 variseal sealing in the cable housing. Replace if damaged. **Note** The M2 variseal sealing does not used for robots with protection type Clean room and with food grade lubrication. **Note** For Clean Room robots, apply a little grease to the sealing when replacing the radial sealing and wipe clean after the replacement. **CAUTION** Do not fit M2 variseal sealing on Clean Room robots.	M2 variseal sealing: 3HAC044641-006 Radial sealing: 3HAC024865-001 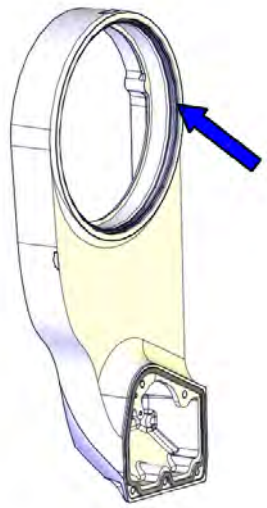 xx1400000473 Replacement is detailed in *Replacing the axis-3 radial sealing and sealing ring on page 374*.
11	Refit the cable housing of the lower arm.	Tightening torque: 3 Nm 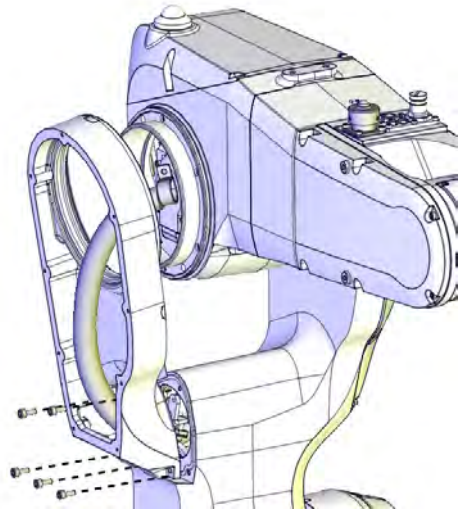 xx1400000785

Continues on next page

© Copyright 2014 - 2017 ABB. All rights reserved.

	Action	Note
12	**For robots with protection type Clean Room** Apply a string of the sealant Sikaflex 521FC to the joint of the cable housing of the lower arm. Smooth out the sealant string using a finger tip. Use washing-up on finger tips to get a smooth joint. If necessary, add extra sealant to get a full cover joint. **Note** No sealing is required in the cavities of the three lower screws highlighted with a ring in the figure.	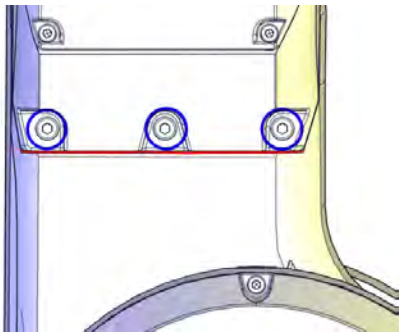 xx1600000218
13	**For robots with protection type Foundry Plus (option 287-3)** If required, fit two screws for protection.	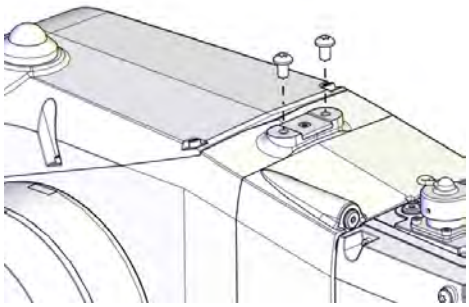 xx1600001155
14	Clean Room robots: seal and paint the joints that have been opened. See *Replacing parts on the robot on page 138* **Note** After all repair work, wipe the robot free from particles with spirit on a lint free cloth.	

Continues on next page

© Copyright 2014 - 2017 ABB. All rights reserved.

4.6.3 Replacing the axis-3 drive unit

Continued

Concluding procedure

	Action	Note
1	Refit the fix sheet to the motor.	Tightening torque: 1.5 Nm. 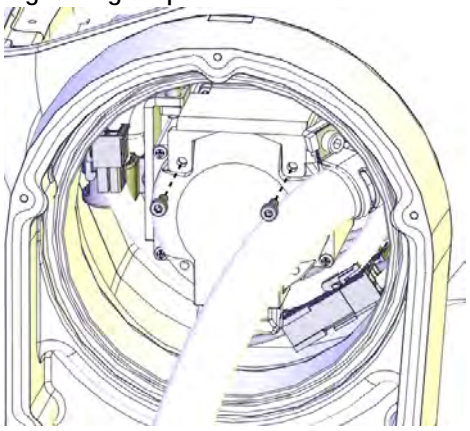 xx1300002423
2	Refit the fix sheet to the inner plastic guide.	Tightening torque: 1.5 Nm. 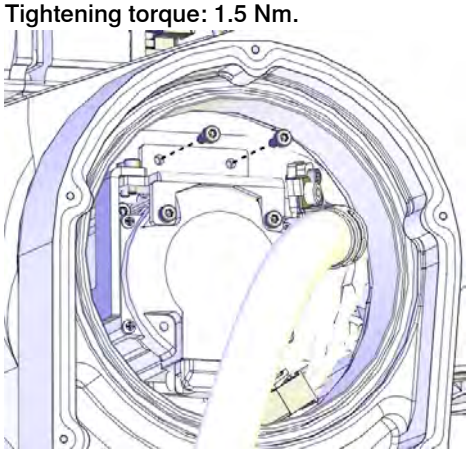 xx1300002421
3	Reconnect the axis-3 motor connectors.	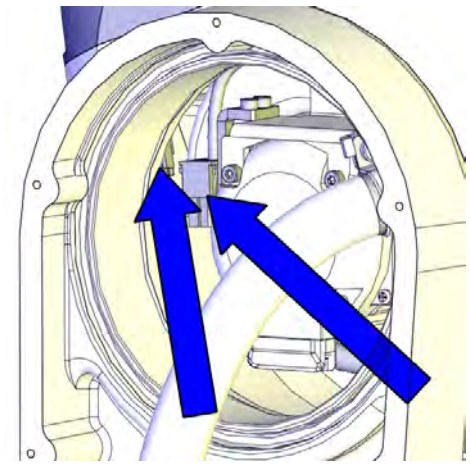 xx1300002420

Continues on next page

© Copyright 2014 - 2017 ABB. All rights reserved.

	Action	Note
4	Refit the plate.	Tightening torque: 1.5 Nm. 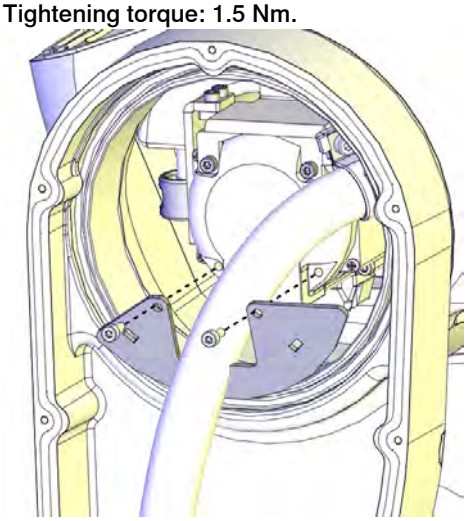 xx1300002413
5	**For robots with protection class IP67 (option 287-10)** **For robots with protection type Foundry Plus (option 287-3)** **For robots with with protection type Clean Room** **For robots with food grade lubrication** Check the gasket of the cable housing cover. Replace if damaged.	Gasket on cable housing cover: 3HAC056724-001 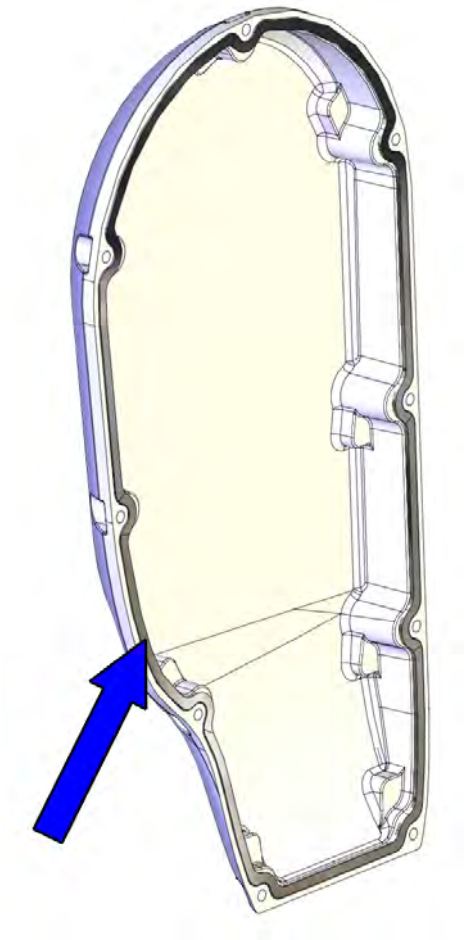 xx1400000048

Continues on next page

© Copyright 2014 - 2017 ABB. All rights reserved.

4.6.3 Replacing the axis-3 drive unit

Continued

	Action	Note
6	Check the PTFE film on the cable housing cover. Replace if damaged.	PTFE film on cable housing cover: 3HAC044660-001
7	Apply grease to the inner surface of the cable housing cover and the PTFE film surface.	
8	Refit the cable housing cover.	Screws: 3HAB3409-207 (M3x8). Tightening torque: 1.5 Nm 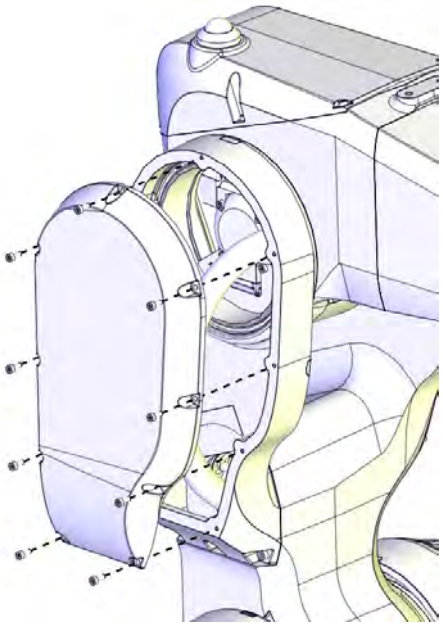 xx1300002400 **Note** Only use specified screws, never replace them with other screws.
9	For robots with protection type Clean Room: Clean and paint the joints that have been opened. See *Replacing parts on the robot on page 138* **Note** After all repair work, wipe the Clean Room robot free from particles with spirit on a lint free cloth.	
10	Recalibrate the robot.	Calibration is detailed in section *Calibration on page 733*.

Continues on next page

© Copyright 2014 - 2017 ABB. All rights reserved.

	Action	Note
11	 **DANGER** Make sure all safety requirements are met when performing the first test run. These are further detailed in the section *DANGER - First test run may cause injury or damage! on page 48*.	

© Copyright 2014 - 2017 ABB. All rights reserved.

4.6.4 Replacing the axis-4 gearbox, drive shaft and pulley

Location of gearbox, drive shaft and pulley

The axis-4 gearbox, including drive shaft and pulley, is located as shown in the figure.

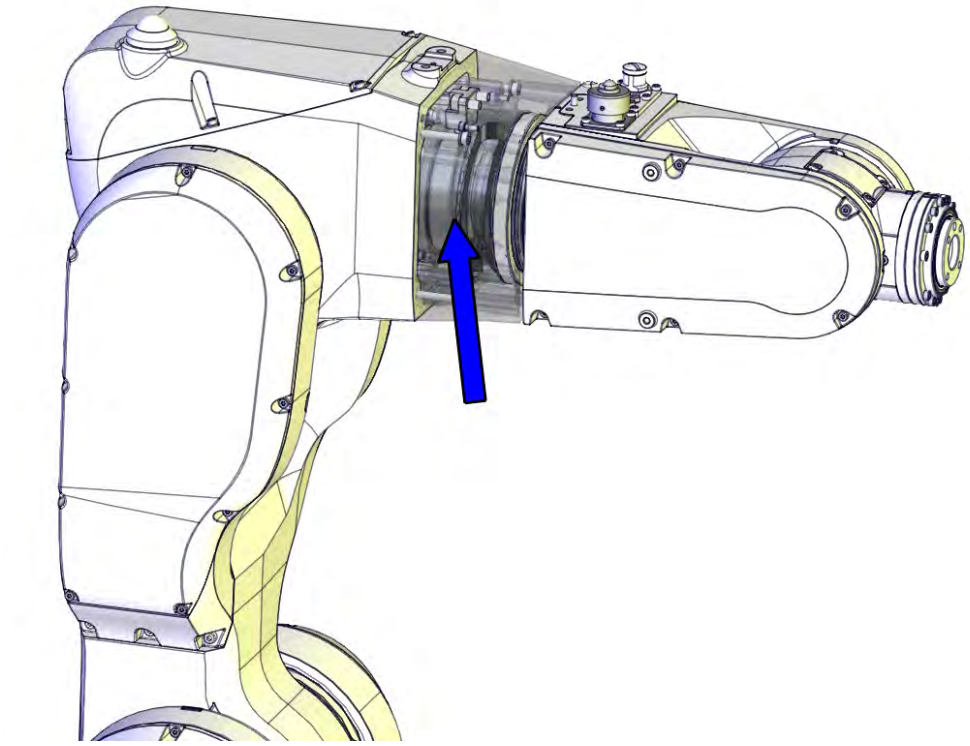

xx1300002462

Required spare parts

Note

The spare part numbers that are listed in the table can be out of date. See the latest revision of *Product manual, spare parts - IRB 1200* on ABB Library.

Spare part	Article number	Note
Gearbox	3HAC049629-001	
Gearbox, food grade lubrication	3HAC057904-001	Used for robots with food grade lubrication.
Shaft	3HAC049631-001	
Pulley	3HAC044687-001	
Motor bracket	3HAC044689-001	Replace if damaged.
Gearbox sleeve	3HAC044685-001	
M2 variseal sealing	3HAC044641-007	Used with protection class IP67. Used with protection type Foundry Plus. Replace if damaged.

Continues on next page

© Copyright 2014 - 2017 ABB. All rights reserved.

Spare part	Article number	Note
Radial sealing with dust lip	3HAB3701-48	Not used with protection class IP40. Replace if damaged.
Washer	3HAC044869-001	Replace if damaged
Gasket on cable housing cover	3HAC056724-001	Not used with protection class IP40. Replace if damaged.
Washer	3HAC044869-001	Replace if damaged
Gasket for tubular cover	3HAC058822-001	Not used with protection class IP40. Replace if damaged.
Gasket for tubular cable housing cover	3HAC056707-001	Not used with protection class IP40. Replace if damaged.
Housing cover gasket (IRB 1200-7/0.7)	3HAC056698-001	Not used with protection class IP40. Replace if damaged.
Housing cover gasket (IRB 1200-5/0.9)	3HAC056697-001	Not used with protection class IP40. Replace if damaged.

Required tools and equipment

Equipment, etc.	Article number	Note
Axis-4 sealing assembly tool set	3HAC049699-001	Used to refit the radial sealing, if replacement is needed.
24 VDC power supply	-	Used to release the motor brakes.
Calibration toolkit, manual calibration	3HAC051256-001	Includes calibration tools, pins and attachment screws for manual calibration method. [i]
Standard toolkit	-	Content is defined in section *Standard toolkit on page 808*.

[i] The robot is calibrated by either manual calibration or Axis Calibration at factory. Always use the same calibration method as used at the factory.
Information about valid calibration method is found on the calibration label or in the calibration menu on the FlexPendant.
If no data is found related to standard calibration, manual calibration is used as default.

Required consumables

Consumable	Art. no.	Note
Cable straps	-	
Cleaning agent	-	Loctite 7063
Flange sealing	12340011-116	Loctite 574 For robots with protection class IP67 (option 287-10) For robots with protection type Foundry Plus (option 287-3)
Locking liquid	3HAB7116-1	Loctite 243

Continues on next page

© Copyright 2014 - 2017 ABB. All rights reserved.

4.6.4 Replacing the axis-4 gearbox, drive shaft and pulley
Continued

Consumable	Art. no.	Note
Sealant	3HAC026759-001	Sikaflex 521FC For robots with protection type Clean Room

Deciding calibration routine

Decide which calibration routine to be used, based on the information in the table. Depending on which routine is chosen, action might be required prior to beginning the repair work of the robot, see the table.

	Action	Note
1	Decide which calibration routine to use for calibrating the robot. • Reference calibration. External cable packages (DressPack) and tools can stay fitted on the robot. • Fine calibration. All external cable packages (DressPack) and tools must be removed from the robot.	**Note** Calibrating axis 6 always requires tools to be removed from the mounting flange (also for reference calibration) since the mounting flange is used for installation of the calibration tool.
	If the robot is to be calibrated with reference calibration: Find previous reference values for the axis or create new reference values. These values are to be used after the repair procedure is completed, for calibration of the robot. If no previous reference values exist, and no new reference values can be created, then reference calibration is not possible.	Follow the instructions given in the reference calibration routine on the FlexPendant to create reference values. Creating new values requires possibility to move the robot. Read more about reference calibration for Axis Calibration in *Reference calibration routine on page 743*.
	If the robot is to be calibrated with fine calibration: Remove all external cable packages (DressPack) and tools from the robot.	

Removing the gear unit

Preparations before removing the axis-4 gear unit

	Action	Note
1	Decide which calibration routine to use, and take actions accordingly prior to beginning the repair procedure.	

Continues on next page

© Copyright 2014 - 2017 ABB. All rights reserved.

	Action	Note
2	Jog all axes to zero position.	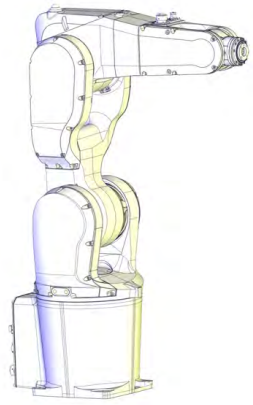 xx1300002581
3	**DANGER** Turn off all: • electric power supply • hydraulic pressure supply • air pressure supply to the robot, before entering the robot working area.	

Getting access to inside of the wrist unit

	Action	Note
1	**DANGER** Make sure that all supplies for electrical power, hydraulic pressure, and air pressure are turned off.	
2	**CAUTION** For robots with protection type Clean Room: Always cut the paint with a knife and grind the paint edge when disassembling parts of the robot! See *Replacing parts on the robot on page 138*	

Continues on next page

© Copyright 2014 - 2017 ABB. All rights reserved.

4.6.4 Replacing the axis-4 gearbox, drive shaft and pulley

Continued

	Action	Note
3	Remove the covers on each side of the wrist by removing their screws. **Note** **For robots with protection class IP67 (option 287-10)** **For robots with protection type Foundry Plus (option 287-3)** The two front screws on the left hand side cover (encircled in the figure) have been fitted with locking liquid. The tubular cover (left hand side cover) has two extra screws and washers, as encircled in the figure. **Note** **For robots with protection type Clean Room** The tubular cover (left hand side cover) has two extra screws and washers, as encircled in the figure.	For robots with protection class IP67 (option 287-10) For robots with protection type Foundry Plus (option 287-3) 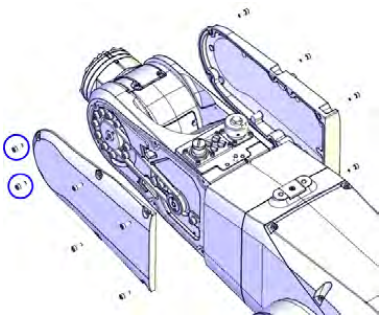 xx1300002349 For robots with protection type Clean Room 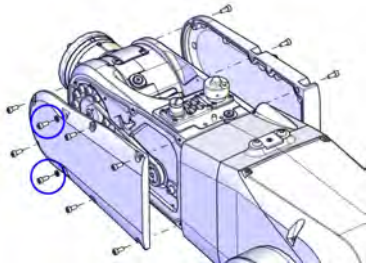 xx1600001148

Disconnecting the axis-5 motor connectors

	Action	Note
1	**DANGER** Make sure that all supplies for electrical power, hydraulic pressure, and air pressure are turned off.	
2	Snap loose the motor connectors from their holders and then disconnect them. • R3.MP5 • R3.ME5 **Tip** Take photos of the connector and cable position before disconnecting them, to have as a reference when reconnecting.	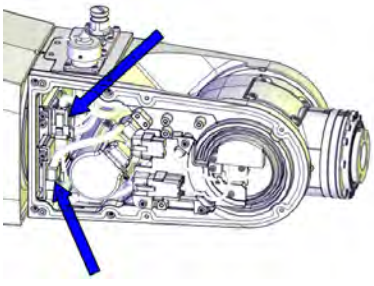 xx1300002360

Continues on next page

© Copyright 2014 - 2017 ABB. All rights reserved.

Removing the axis-5 motor with pulley

	Action	Note
1	**DANGER** Make sure that all supplies for electrical power, hydraulic pressure, and air pressure are turned off.	
2	**CAUTION** For robots with protection type Clean Room: Always cut the paint with a knife and grind the paint edge when disassembling parts of the robot! See *Replacing parts on the robot on page 138*	
3	Loosen the screws so that the motor can be moved sideways.	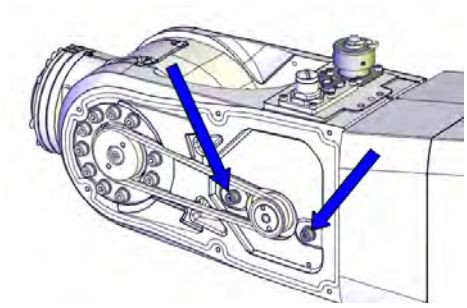 xx1300002350
4	Remove the timing belt.	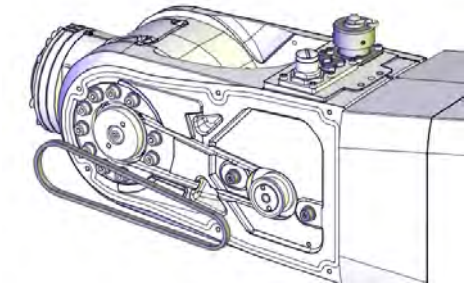 xx1300002351
5	Snap loose and disconnect the axis-5 FPC connectors.	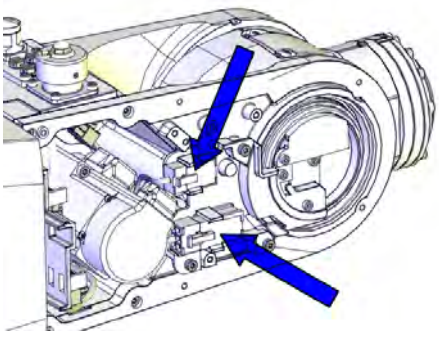 xx1300002390

Continues on next page

© Copyright 2014 - 2017 ABB. All rights reserved.

4.6.4 Replacing the axis-4 gearbox, drive shaft and pulley

Continued

	Action	Note
6	Remove the screws and pull out the motor.	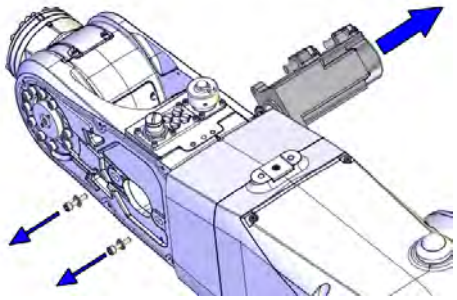 xx1300002352

Removing the wrist

	Action	Note
1	**DANGER** Make sure that all supplies for electrical power, hydraulic pressure, and air pressure are turned off.	
2	**CAUTION** For robots with protection type Clean Room: Always cut the paint with a knife and grind the paint edge when disassembling parts of the robot! See *Replacing parts on the robot on page 138*	
3	Disconnect the connectors shown in the figure.	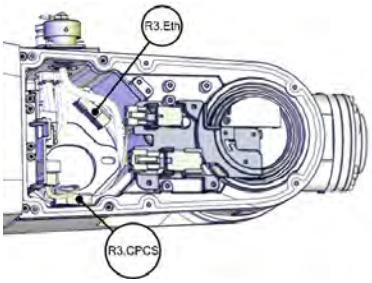 xx1300002353
4	Disconnect the air hoses.	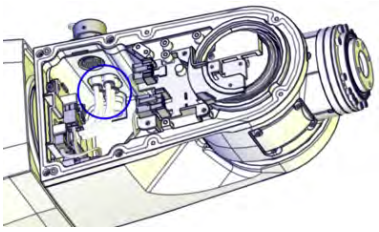 xx1300002355

Continues on next page

© Copyright 2014 - 2017 ABB. All rights reserved.

	Action	Note
5	Remove the connector plate attachment screws.	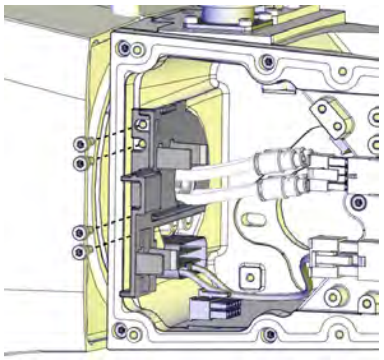 xx1300002356
6	Guide the hoses through the plate hole and remove the plate.	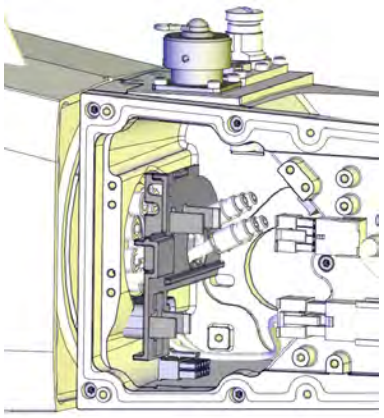 xx1300002357
7	Support the weight of the wrist and remove the screws and the washer.	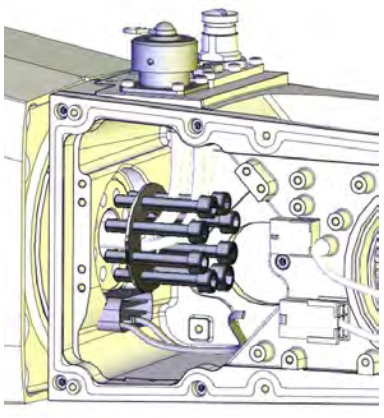 xx1300002358

Continues on next page

© Copyright 2014 - 2017 ABB. All rights reserved.

4.6.4 Replacing the axis-4 gearbox, drive shaft and pulley

Continued

	Action	Note
8	Pull out the wrist carefully while at the same time pulling all connectors and the air hoses out of the wrist. Be careful not to damage the FPC cabling and the connectors. **CAUTION** Pay special attention to the plastic block on the FPC unit. It is easily pulled off, make sure it stays fitted to the FPC unit. 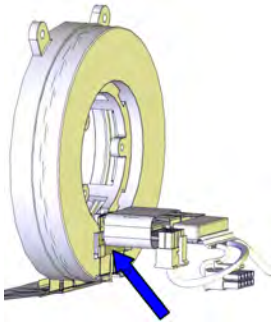 xx1300002611	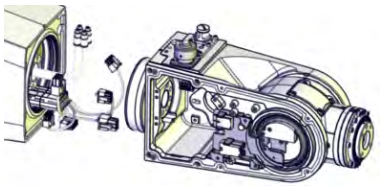 xx1300002359

Disconnecting the axis-4 motor connectors

	Action	Note
1	**DANGER** Make sure that all supplies for electrical power, hydraulic pressure, and air pressure are turned off.	
2	**CAUTION** For robots with protection type Clean Room: Always cut the paint with a knife and grind the paint edge when disassembling parts of the robot! See *Replacing parts on the robot on page 138*	
3	Remove the cover from the upper arm housing. **CAUTION** **For robots with safety lamp (option)** Be aware of the signal lamp cables that are attached inside the housing! Disconnect the lamp cable connectors R3.H1 and R3.H2 and then lift away the cover completely.	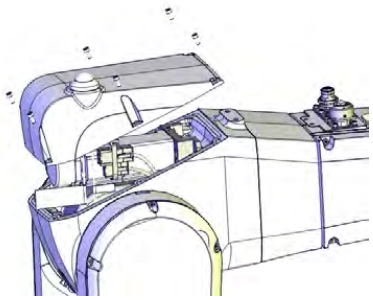 xx1300000456

Continues on next page

© Copyright 2014 - 2017 ABB. All rights reserved.

	Action	Note
4	Cut the strap that holds the connectors.	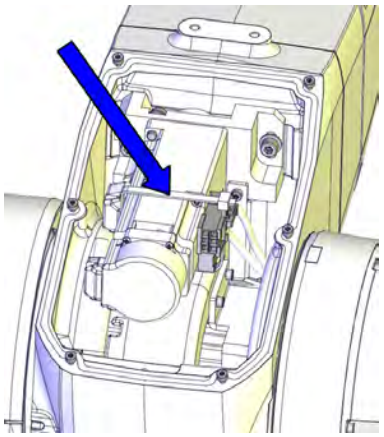 xx1300002494
5	Disconnect the motor connectors. **Tip** Take photos of the connector and cable position before disconnecting them, to have as a reference when reconnecting.	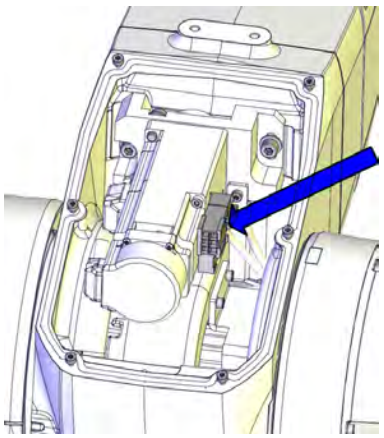 xx1300002495

Disconnecting the axis-4 FPC connectors

	Action	Note
1	**DANGER** Make sure that all supplies for electrical power, hydraulic pressure, and air pressure are turned off.	
2	**CAUTION** For robots with protection type Clean Room: Always cut the paint with a knife and grind the paint edge when disassembling parts of the robot! See *Replacing parts on the robot on page 138*	

Continues on next page

© Copyright 2014 - 2017 ABB. All rights reserved.

4.6.4 Replacing the axis-4 gearbox, drive shaft and pulley

Continued

	Action	Note
3	Remove the cable housing cover.	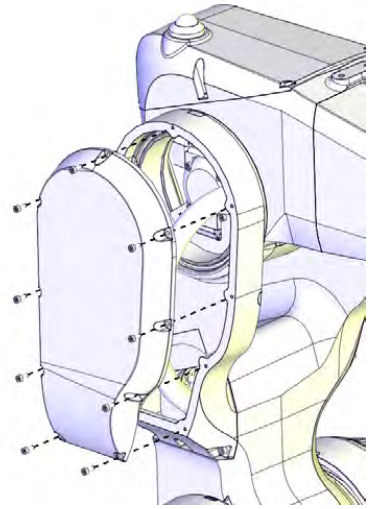 xx1300002400
4	Remove the plate.	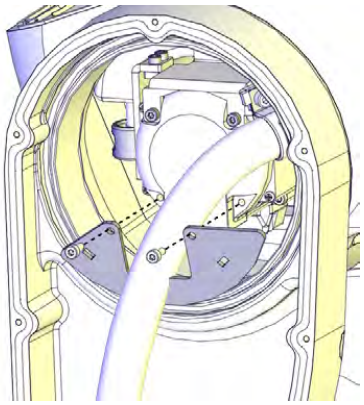 xx1300002413

Continues on next page

© Copyright 2014 - 2017 ABB. All rights reserved.

	Action	Note
5	Pull out the FPC connectors from the housing and disconnect them.	Cable layout in IRB 1200-7/0.7 : 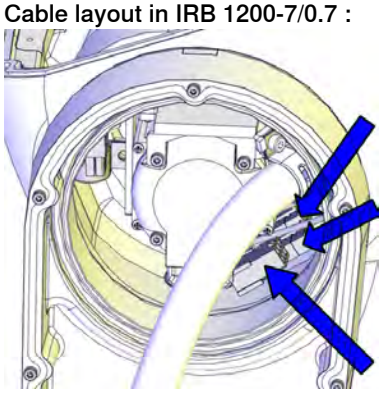 xx1300002412 Cable layout in IRB 1200-5/0.9 : 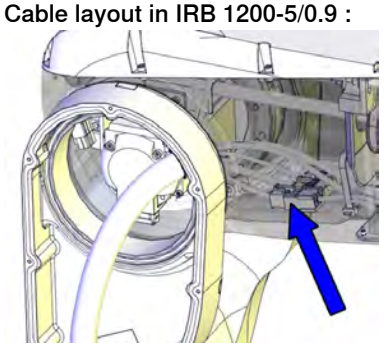 xx1400001471
6	Remove the small cover of the housing.	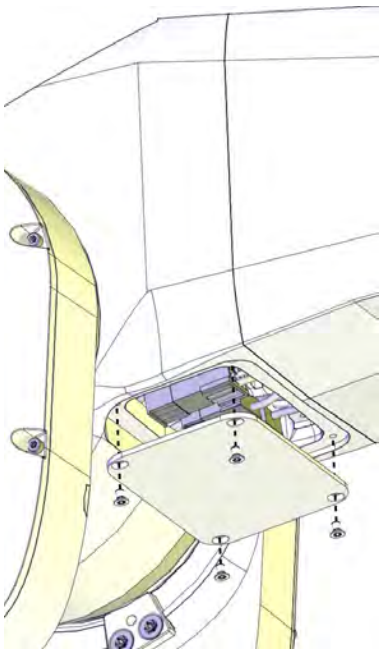 xx1300002398

Continues on next page

© Copyright 2014 - 2017 ABB. All rights reserved.

4.6.4 Replacing the axis-4 gearbox, drive shaft and pulley

Continued

	Action	Note
7	Disconnect the remaining FPC connectors.	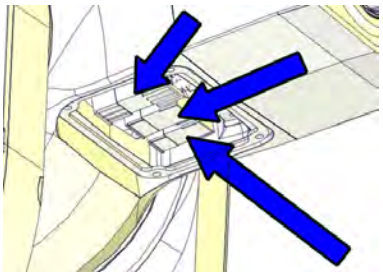 xx1300002399

Removing the axis-4 motor

	Action	Note
1	**DANGER** Make sure that all supplies for electrical power, hydraulic pressure, and air pressure are turned off.	
2	**CAUTION** For robots with protection type Clean Room: Always cut the paint with a knife and grind the paint edge when disassembling parts of the robot! See *Replacing parts on the robot on page 138*	
3	Loosen the two attachment screws and move the motor downwards to slacken the timing belt.	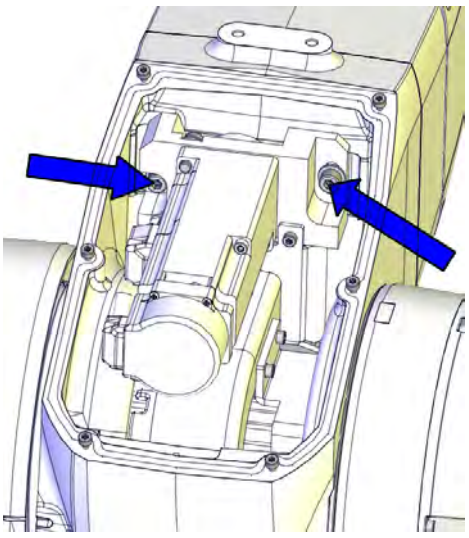 xx1300002524

Continues on next page

© Copyright 2014 - 2017 ABB. All rights reserved.

	Action	Note
4	Remove the motor screws and washers and carefully lift out the motor and the pulley.	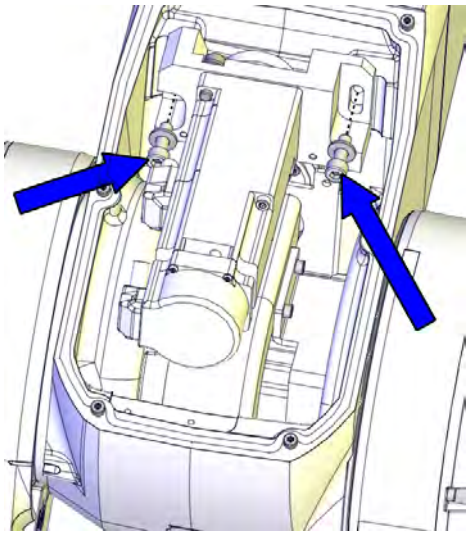 xx1300002522
5	Remove the timing belt from its groove on the motor.	

Removing the air hoses

	Action	Note
1	**DANGER** Make sure that all supplies for electrical power, hydraulic pressure, and air pressure are turned off.	
2	**CAUTION** For robots with protection type Clean Room: Always cut the paint with a knife and grind the paint edge when disassembling parts of the robot! See *Replacing parts on the robot on page 138*	

Continues on next page

© Copyright 2014 - 2017 ABB. All rights reserved.

4.6.4 Replacing the axis-4 gearbox, drive shaft and pulley

Continued

	Action	Note
3	Remove the plastic protection plate by removing its screws.	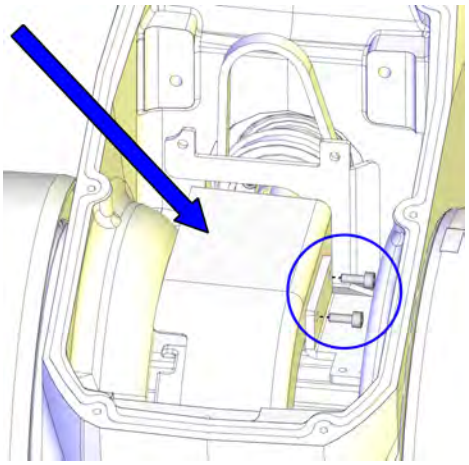 xx1400000797
4	Pull in the air hoses into the housing, out from the housing extender unit.	

Removing the housing extender unit

	Action	Note
1	**CAUTION** For robots with protection type Clean Room: Always cut the paint with a knife and grind the paint edge when disassembling parts of the robot! See *Replacing parts on the robot on page 138*	
2	Remove the axis-4 FPC unit screws.	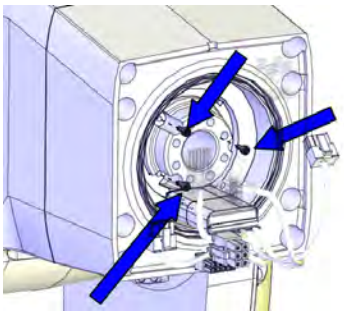 xx1300002373
3	**For robots with protection type Clean Room** **For robots with protection type Foundry Plus** Remove the plugs covering the extender unit screws with a needle-nose plier.	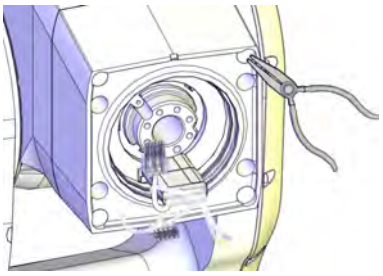 xx1600000262

Continues on next page

© Copyright 2014 - 2017 ABB. All rights reserved.

	Action	Note
4	Remove the extender unit screws.	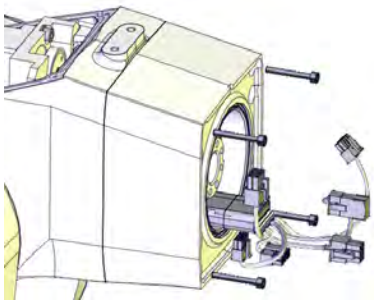 xx1300002372
5	Remove the housing extender unit. Be careful not to damage the cabling.	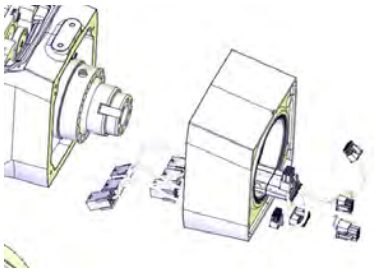 xx1300002374

Removing the axis-4 drive shaft

	Action	Note
1	**DANGER** Make sure that all supplies for electrical power, hydraulic pressure, and air pressure are turned off.	
2	**CAUTION** For robots with protection type Clean Room: Always cut the paint with a knife and grind the paint edge when disassembling parts of the robot! See *Replacing parts on the robot on page 138*	

Continues on next page

© Copyright 2014 - 2017 ABB. All rights reserved.

4.6.4 Replacing the axis-4 gearbox, drive shaft and pulley

Continued

	Action	Note
3	Remove the screws and washers.	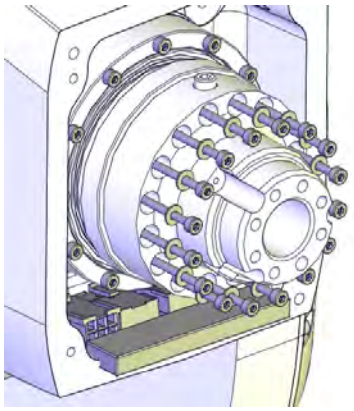 xx1300002376
4	Remove the shaft.	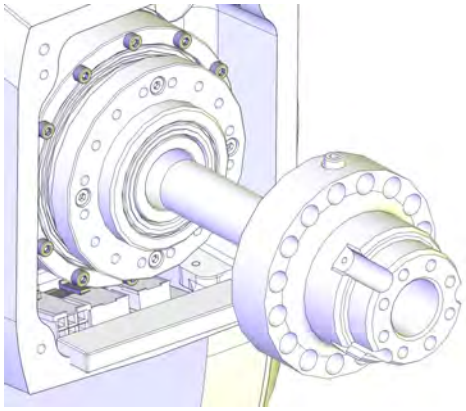 xx1400002400
5	If replacing the drive shaft with a new spare part, remove the sleeve from the shaft and fit it to the new shaft.	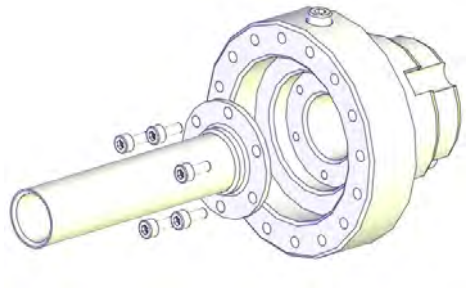 xx1300002387

Removing the axis-4 gear unit and pulley

	Action	Note
1	**DANGER** Make sure that all supplies for electrical power, hydraulic pressure, and air pressure are turned off.	

Continues on next page

© Copyright 2014 - 2017 ABB. All rights reserved.

	Action	Note
2	**CAUTION** For robots with protection type Clean Room: Always cut the paint with a knife and grind the paint edge when disassembling parts of the robot! See *Replacing parts on the robot on page 138*	
3	Remove the gear attachment screws.	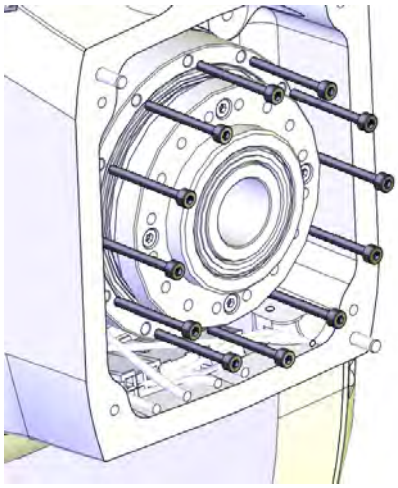 xx1300002378
4	Pull out the gear.	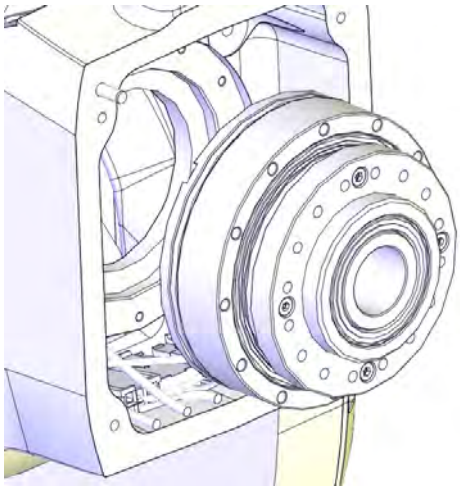 xx1300002379

Continues on next page

© Copyright 2014 - 2017 ABB. All rights reserved.

4.6.4 Replacing the axis-4 gearbox, drive shaft and pulley
Continued

	Action	Note
5	Remove the pulley from the gear by removing its attachment screws.	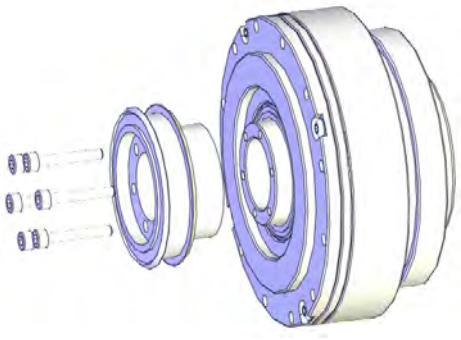 xx1300002380

Refitting the gear unit

Refitting the axis-4 gear unit and pulley

	Action	Note
1	Clean Room robots: clean the joints that have been opened. See *Replacing parts on the robot on page 138*	
2	Refit the pulley to the gear and secure with its attachment screws.	Screws: 3HAB3409-209 (M3x20). Tightening torque: 1.1 Nm. 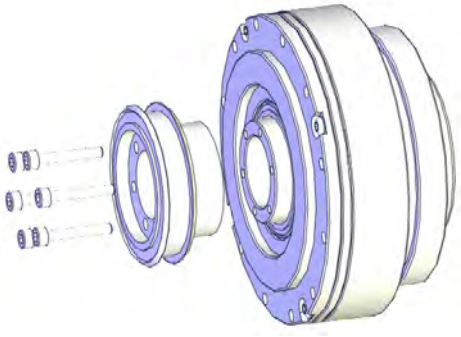 xx1300002380 **Note** Only use specified screws, never replace them with other screws.

Continues on next page

© Copyright 2014 - 2017 ABB. All rights reserved.

	Action	Note
3	Refit the gear to the housing.	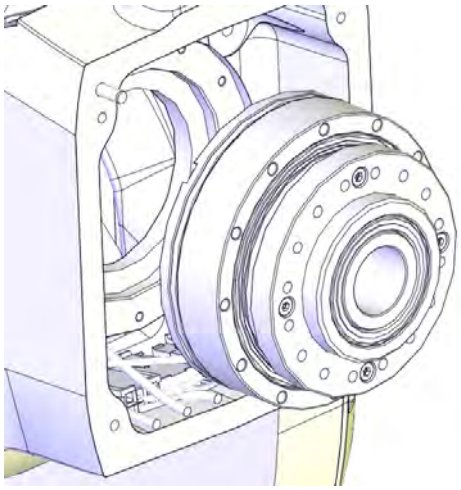 xx1300002379
4	Secure with the attachment screws.	Screws: 3HAB3409-211 (M3x30). Tightening torque: 1.8 Nm. 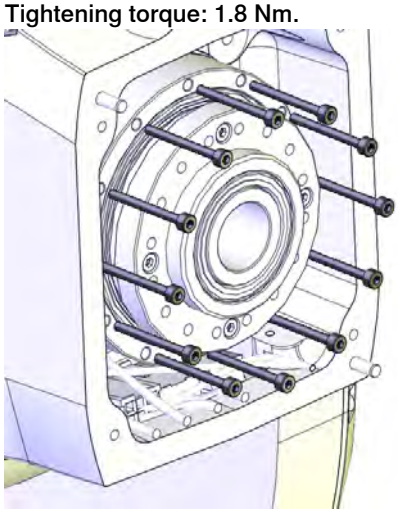 xx1300002378 **Note** Only use specified screws, never replace them with other screws.
5	Clean Room robots: seal and paint the joints that have been opened. See *Replacing parts on the robot on page 138* **Note** After all repair work, wipe the robot free from particles with spirit on a lint free cloth.	

Continues on next page

© Copyright 2014 - 2017 ABB. All rights reserved.

4.6.4 Replacing the axis-4 gearbox, drive shaft and pulley

Continued

Refitting the axis-4 drive shaft

	Action	Note
1	Clean Room robots: clean the joints that have been opened. See *Replacing parts on the robot on page 138*	
2	If replacing the drive shaft with a new spare part, remove the sleeve from the old shaft and fit it to the new shaft. Also move the screw on top of the old drive shaft to the new shaft.	Screws: 3HAB3409-207 (M3x8). Tightening torque: 1.5 Nm. 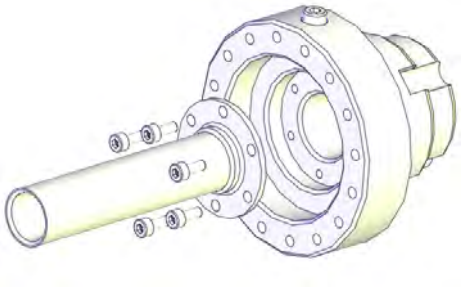 xx1300002387
3	Position the shaft so that the encircled screw is on top, then refit the shaft.	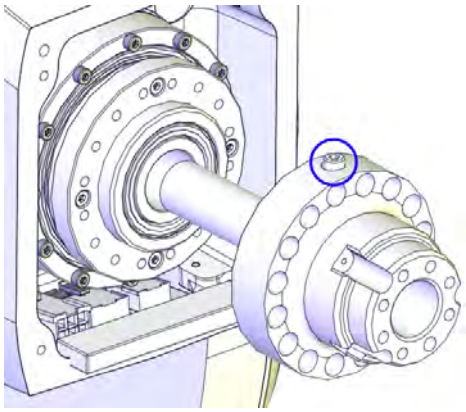 xx1300002377
4	Secure with screws and washers.	Screws: 3HAB3409-210 (M3x25). Tightening torque: 1.8 Nm. 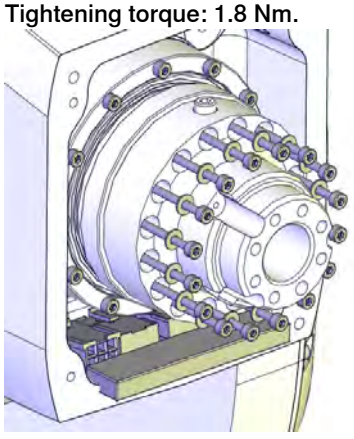 xx1300002376 **Note** Only use specified screws, never replace them with other screws.

Continues on next page

© Copyright 2014 - 2017 ABB. All rights reserved.

	Action	Note
5	Clean Room robots: seal and paint the joints that have been opened. See *Replacing parts on the robot on page 138* **Note** After all repair work, wipe the robot free from particles with spirit on a lint free cloth.	

Checking the housing extender sealings

	Action	Note
1	Clean Room robots: clean the joints that have been opened. See *Replacing parts on the robot on page 138*	
2	**For robots with protection class IP67 (option 287-10)** **For robots with protection type Foundry Plus (option 287-3)** Check the sealing. Replace if damaged. **CAUTION** Do not fit M2 variseal sealing on Clean Room robots.	M2 variseal sealing: 3HAC044641-007 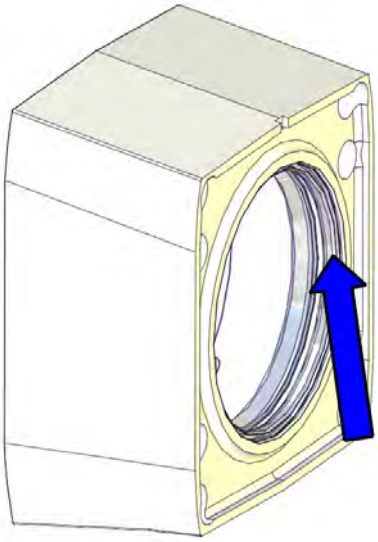 xx1300002418

Continues on next page

© Copyright 2014 - 2017 ABB. All rights reserved.

4.6.4 Replacing the axis-4 gearbox, drive shaft and pulley
Continued

	Action	Note
3	**For robots with protection class IP67 (option 287-10)** **For robots with protection type Foundry Plus (option 287-3)** **For robots with with protection type Clean Room** **For robots with food grade lubrication** Check the radial sealing. Replace if damaged, as described below. In order to replace the radial sealing, both the axis-4 mechanical stop and the axis-4 FPC unit must be removed from the housing extender unit, if not already removed.	Radial sealing with dust lip: 3HAB3701-48 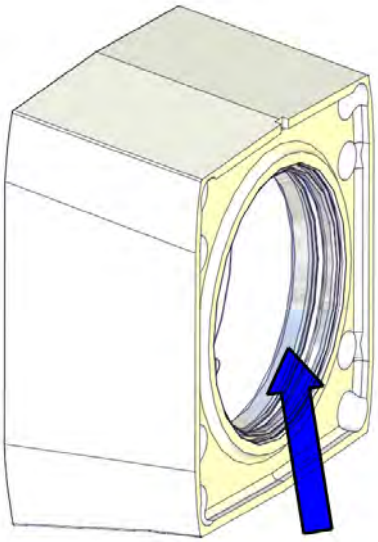 xx1400000438
4	**For robots with protection type Clean Room** Apply a little grease to the sealing when replacing the radial sealing and wipe clean after the replacement.	
5	Fit the radial sealing into the housing extender unit.	
6	Fit the circular part of the radial sealing assembly tool against the radial sealing.	Axis-4 sealing assembly tool set: 3HAC049699-001
7	Fit the tool plate to the other side of the housing extender unit with the six screws M6X50.	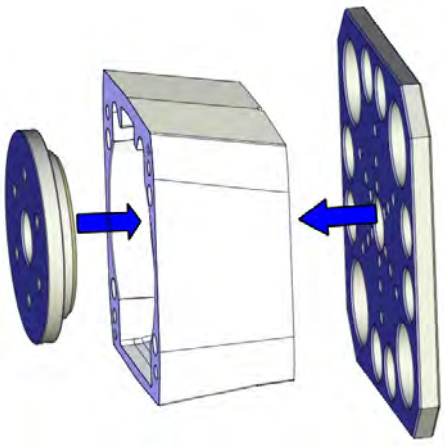 xx1400000436

Continues on next page

© Copyright 2014 - 2017 ABB. All rights reserved.

	Action	Note
8	Screw the screws, little by little, to press the sealing into place.	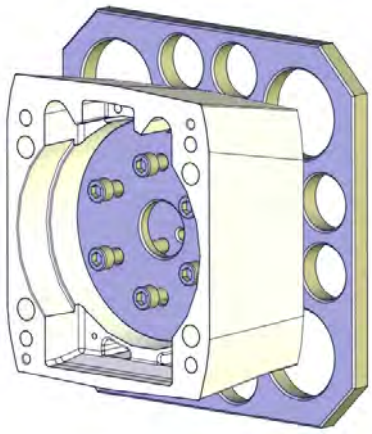 xx1400000437
9	Remove the assembly tool.	
10	Check that the sealing is undamaged and properly fitted.	
11	Refit both the axis-4 mechanical stop and the axis-4 FPC unit to the housing extender unit.	
12	Clean Room robots: seal and paint the joints that have been opened. See *Replacing parts on the robot on page 138* **Note** After all repair work, wipe the robot free from particles with spirit on a lint free cloth.	

Refitting the housing extender unit

	Action	Note
1	Clean Room robots: clean the joints that have been opened. See *Replacing parts on the robot on page 138*	
2	**For robots with protection class IP67 (option 287-10)** **For robots with protection type Foundry Plus (option 287-3)** Remove residual locking liquid and other pollutants with cleaning agent Loctite 7063. Apply flange sealing Loctite 574 on the mounting surfaces of the housing extender unit. **Note** For Clean Room robots, wipe clean the overflowing Loctite 574 if there is any.	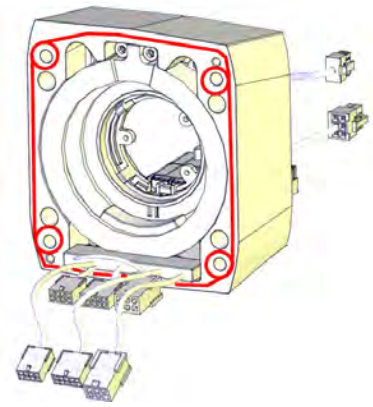 xx1300002613

Continues on next page

© Copyright 2014 - 2017 ABB. All rights reserved.

4.6.4 Replacing the axis-4 gearbox, drive shaft and pulley

Continued

	Action	Note
3	**For robots with protection type Clean Room** **For robots with protection type Foundry Plus** Make sure the four cavities are fully filled with glue. If not, fill glue again before the refitting.	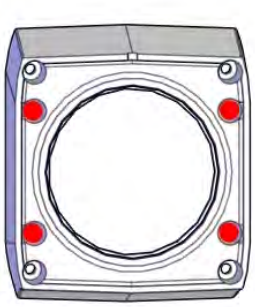 xx1600000216
4	Refit the housing extender unit to the housing while putting the FPC cables into the housing and the air hoses through the housing extender unit. Be careful not to damage the cabling. **CAUTION** Make sure that the axis-4 FPC unit is in its zero position when refitting the housing extender unit. **Note** Mate the unit to the two locating pins attached to the housing.	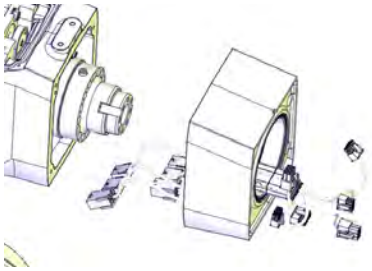 xx1300002374
5	Secure with screws and washers, using locking liquid Loctite 243.	Screws: M4x30. Tightening torque: 2.7 Nm. 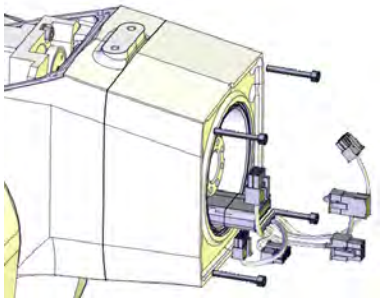 xx1300002372
6	**For robots with protection type Foundry Plus (option 287-3)** **For robots with protection type Clean Room** **For robots with food grade lubrication** Press in screw sealing plugs to cover the screws.	Screw sealing plug: 3HAC053685-001 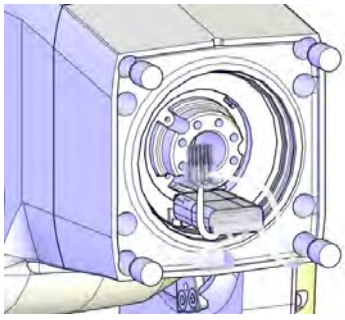 xx1600000263

Continues on next page

© Copyright 2014 - 2017 ABB. All rights reserved.

	Action	Note
7	Fit and secure the axis-4 FPC unit screws.	Tightening torque: 0.3 Nm. 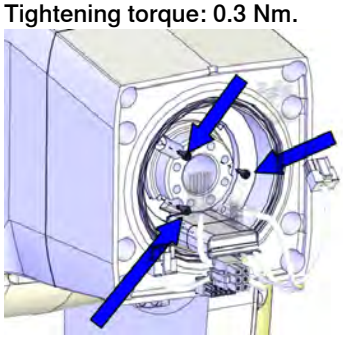 xx1300002373
8	Clean Room robots: seal and paint the joints that have been opened. See *Replacing parts on the robot on page 138* **Note** After all repair work, wipe the robot free from particles with spirit on a lint free cloth.	

Refitting the axis-4 timing belt and the air hoses

	Action	Note
1	**DANGER** Make sure that all supplies for electrical power, hydraulic pressure, and air pressure are turned off.	
2	Clean Room robots: clean the joints that have been opened. See *Replacing parts on the robot on page 138*	
3	Place the timing belt at the gear pulley and run the air hoses through the belt.	
4	Install the air hoses in and through the housing extender unit.	
5	Refit the plastic protection plate with its screws.	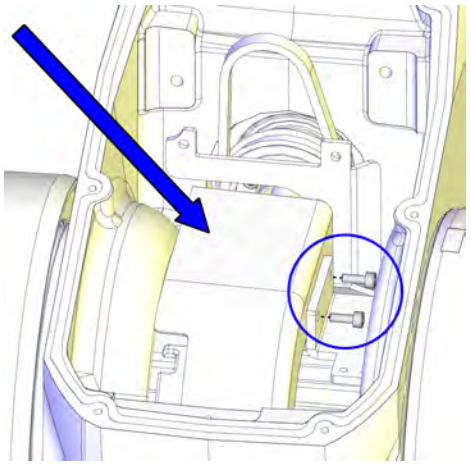 xx1400000797

Continues on next page

© Copyright 2014 - 2017 ABB. All rights reserved.

4.6.4 Replacing the axis-4 gearbox, drive shaft and pulley

Continued

	Action	Note
6	Clean Room robots: seal and paint the joints that have been opened. See *Replacing parts on the robot on page 138* **Note** After all repair work, wipe the robot free from particles with spirit on a lint free cloth.	

Securing the axis-4 motor

	Action	Note
1	Clean Room robots: clean the joints that have been opened. See *Replacing parts on the robot on page 138*	
2	Check that: • all assembly surfaces are clean and undamaged. • the motor is clean and undamaged.	
3	Fit the timing belt to the motor pulley.	

Continues on next page

© Copyright 2014 - 2017 ABB. All rights reserved.

	Action	Note
4	Place the motor at its mounting position and fasten the attachment screws and washers just enough to still be able to move the motor. Position the robot with the connectors directed as shown in the figure. Verify that the top surface of the axis-4 motor is parallel with the mounting flange surface on the housing, shown in the figure, when moving the motor.	Screws: 3HAB3409-14 (M5x16). 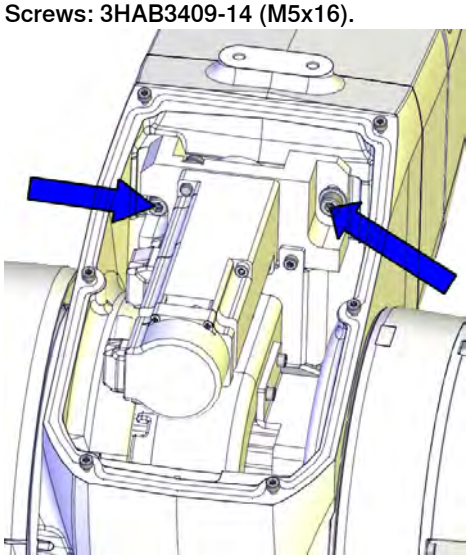 xx1300002524 **Note** Only use specified screws, never replace them with other screws. 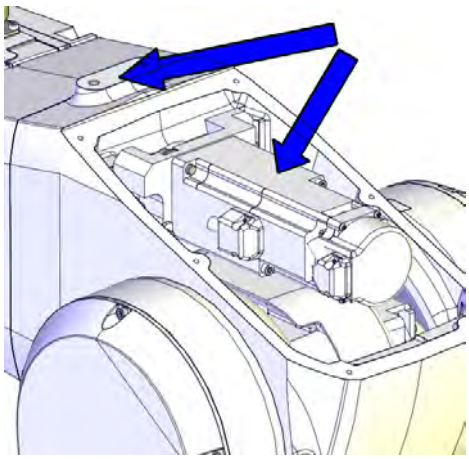 xx1300002612
5	Install the timing belt to the pulleys and verify that the belt runs correctly in the grooves of the pulleys.	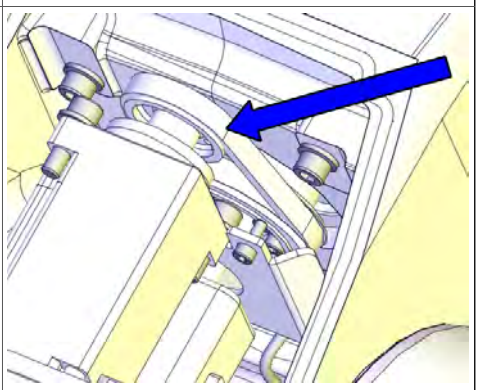 xx1300002525

Continues on next page

© Copyright 2014 - 2017 ABB. All rights reserved.

4.6.4 Replacing the axis-4 gearbox, drive shaft and pulley

Continued

	Action	Note
6	Move the motor to achieve correct belt tension (F = 30 N).	Belt tension: F = 30 N.
7	Secure the motor with its attachment screws.	Tightening torque: 6 Nm.
8	Clean Room robots: seal and paint the joints that have been opened. See *Replacing parts on the robot on page 138* **Note** After all repair work, wipe the robot free from particles with spirit on a lint free cloth.	

Connecting the axis-4 FPC connectors

	Action	Note
1	Clean Room robots: clean the joints that have been opened. See *Replacing parts on the robot on page 138*	
2	Reconnect the FPC connectors. **Tip** See the number markings on the connectors for help to find the corresponding connector.	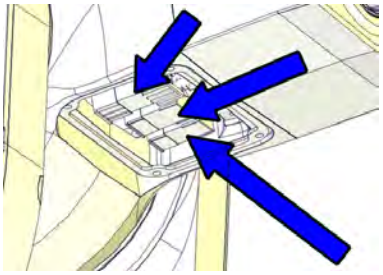 xx1300002399

Continues on next page

© Copyright 2014 - 2017 ABB. All rights reserved.

	Action	Note
3	Reconnect the FPC connectors and push them into place inside the housing. **Tip** See the number markings on the connectors for help to find the corresponding connector.	Cable layout in IRB 1200-7/0.7 : 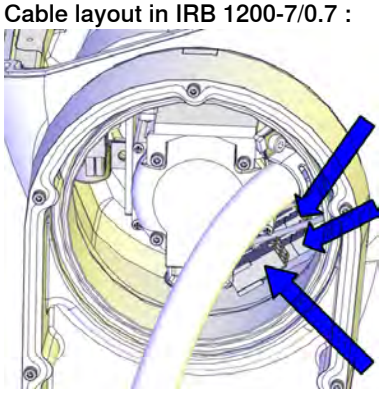 xx1300002412 Cable layout in IRB 1200-5/0.9 : 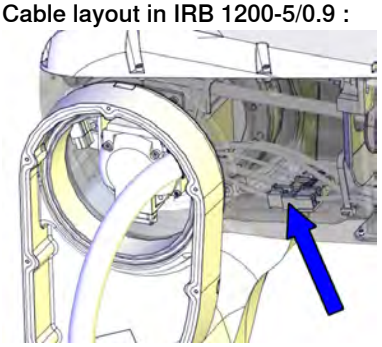 xx1400001471
4	Remove residual locking liquid and other pollutants with cleaning agent Loctite 7063.	

Continues on next page

© Copyright 2014 - 2017 ABB. All rights reserved.

4.6.4 Replacing the axis-4 gearbox, drive shaft and pulley

Continued

	Action	Note
5	**For robots with protection class IP67 (option 287-10)** **For robots with protection type Foundry Plus (option 287-3)** Apply flange sealing Sikaflex 521FC on the mounting surfaces of the small cover on the housing.	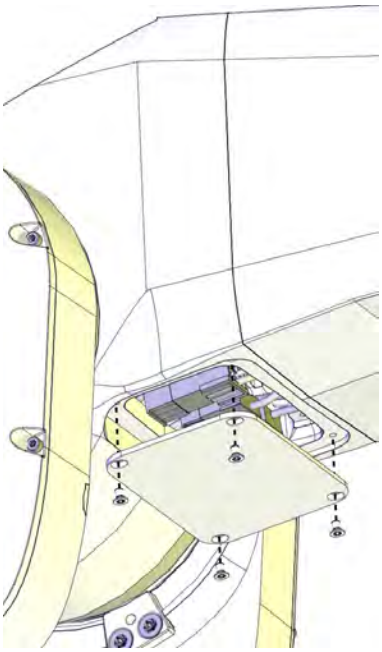 xx1300002398 Housing small cover: 3HAC059684-001 : 3HAC056142-001 (used with protection type Clean Room) Housing small cover, Clean Room Housing small cover, food grade lubrication Screws: 3HAC14286-4 (M3X5). Tightening torque: 1 Nm.
6	Refit the small cover to the housing. Replace if damaged.	
7	**For robots with protection type Clean Room** Apply a string of the sealant Sikaflex 521FC to the joint of the small cover on the housing. Smooth out the sealant string using a finger tip. Use washing-up on finger tips to get a smooth joint. If necessary, add extra sealant to get a full cover joint.	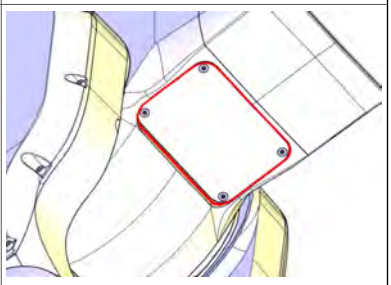 xx1600000214

Continues on next page

© Copyright 2014 - 2017 ABB. All rights reserved.

	Action	Note
8	Refit the plate.	Tightening torque: 1.5 Nm. 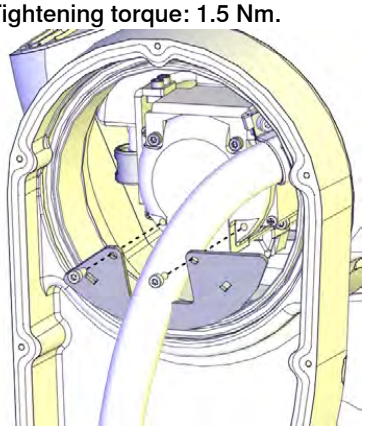 xx1300002413
9	Check the PTFE film on the cable housing. Replace if damaged.	PTFE film on lower arm cable housing: 3HAC044710-001 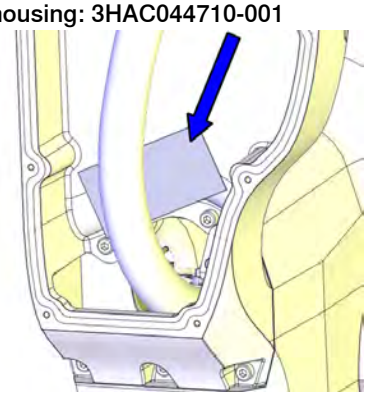 xx1400000740

Continues on next page

© Copyright 2014 - 2017 ABB. All rights reserved.

4.6.4 Replacing the axis-4 gearbox, drive shaft and pulley

Continued

	Action	Note
10	**For robots with protection class IP67 (option 287-10)** **For robots with protection type Foundry Plus (option 287-3)** **For robots with with protection type Clean Room** **For robots with food grade lubrication** Check the gasket of the cable housing cover. Replace if damaged.	Gasket on cable housing cover: 3HAC056724-001 PTFE film on cable housing cover: 3HAC044660-001 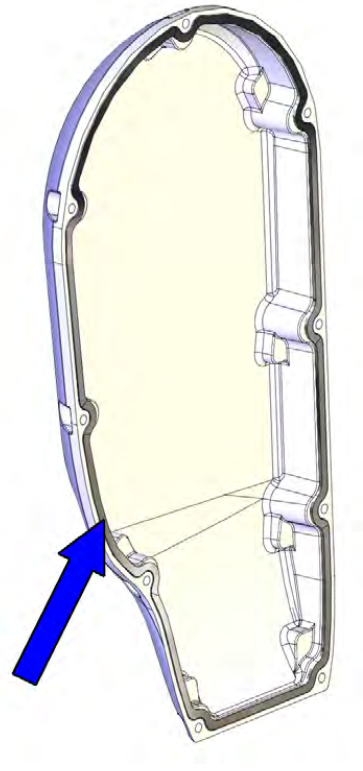 xx1400000048
11	Check the PTFE film on the cable housing cover. Replace if damaged.	
12	Apply grease to the inner surface of the cable housing cover and the PTFE film surface.	

Continues on next page

© Copyright 2014 - 2017 ABB. All rights reserved.

	Action	Note
13	Refit the cable housing cover.	Screws: 3HAB3409-207 (M3x8). Tightening torque: 1.5 Nm 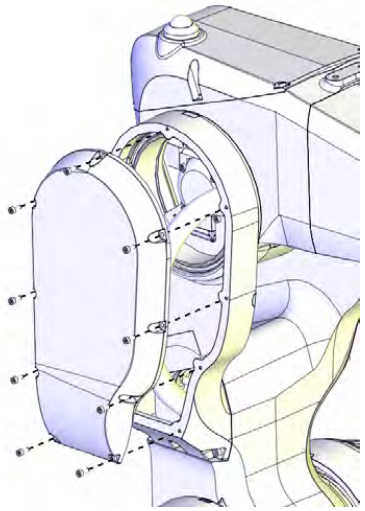 xx1300002400 **Note** Only use specified screws, never replace them with other screws.
14	Clean Room robots: seal and paint the joints that have been opened. See *Replacing parts on the robot on page 138* **Note** After all repair work, wipe the robot free from particles with spirit on a lint free cloth.	

Connecting the axis-4 motor connectors

	Action	Note
1	Reconnect the motor connectors.	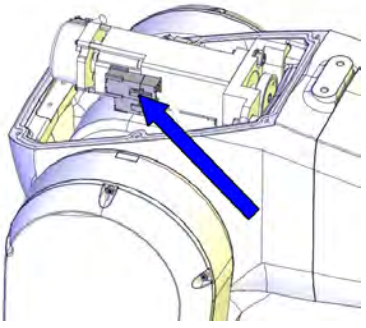 xx1300002371

Continues on next page

© Copyright 2014 - 2017 ABB. All rights reserved.

4.6.4 Replacing the axis-4 gearbox, drive shaft and pulley

Continued

	Action	Note
2	Secure the connectors to the motor with a cable strap.	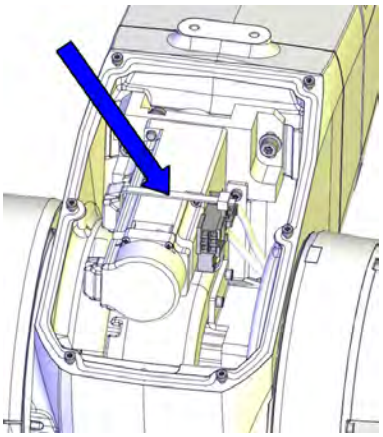 xx1300002494

Refitting the wrist

	Action	Note
1	Clean Room robots: clean the joints that have been opened. See *Replacing parts on the robot on page 138*	
2	Put the connectors and air hoses into the wrist carefully while at the same time refitting the wrist to the housing extender unit. Be careful not to damage the FPC cabling and the connectors. **CAUTION** Pay special attention to the plastic block on the FPC unit. It is easily pulled off, make sure it stays fitted to the FPC unit. 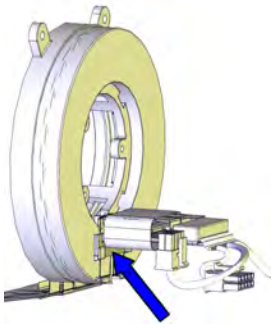 xx1300002611	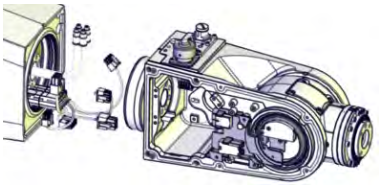 xx1300002359

Continues on next page

© Copyright 2014 - 2017 ABB. All rights reserved.

	Action	Note
3	Refit the washer while at the same time putting the cables through its center. Replace washer, if damaged.	Washer: 3HAC044869-001 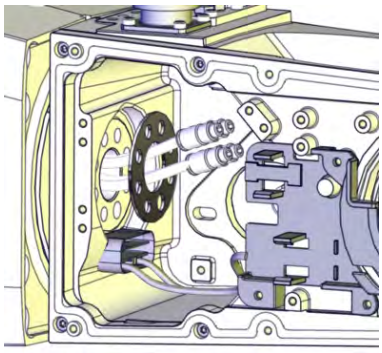 xx1400000001
4	Refit the screw M6x35 (1 pc). Do not tighten yet.	Screw: 3HAB3409-238 (M6x35 (1 pc)). 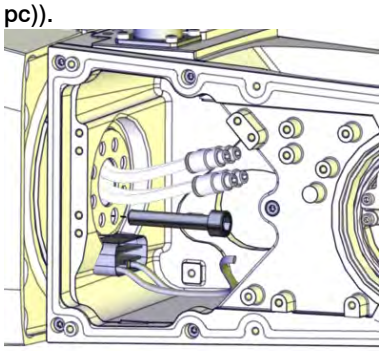 xx1400000002 **Note** Only use specified screws, never replace them with other screws.
5	Refit the rest of the screws (M5x35 (7 pcs)).	Screw: 3HAB3409-237 (M5x35 (7 pcs)). 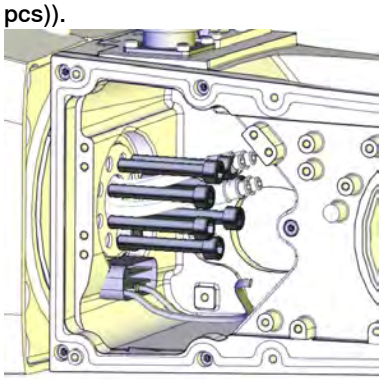 xx1400000003 **Note** Only use specified screws, never replace them with other screws.
6	Tighten all screws.	Tightening torque: 8 Nm.

Continues on next page

© Copyright 2014 - 2017 ABB. All rights reserved.

4.6.4 Replacing the axis-4 gearbox, drive shaft and pulley

Continued

	Action	Note
7	Put the cables through the plate hole and refit the plate.	Tightening torque: 0.3 Nm. 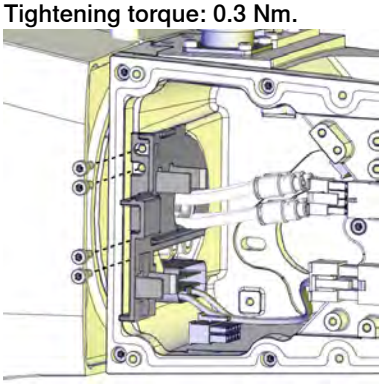 xx1300002356
8	Reconnect the air hoses. **CAUTION** Make sure to connect the air hoses correctly, according to the marking on hoses and connectors.	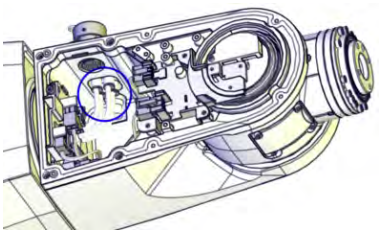 xx1300002355
9	Reconnect the connectors. • R3.Eth • R3.CPCS	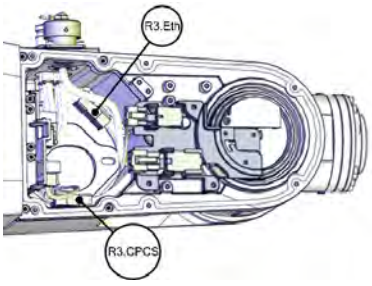 xx1300002353
10	Clean Room robots: seal and paint the joints that have been opened. See *Replacing parts on the robot on page 138* **Note** After all repair work, wipe the robot free from particles with spirit on a lint free cloth.	

Preparations before securing the axis-5 motor

	Action	Note
1	Check that: • all assembly surfaces are clean and without damages • the motor is clean and undamaged.	

Continues on next page

© Copyright 2014 - 2017 ABB. All rights reserved.

	Action	Note
2	Place the motor at its mounting position and fasten the attachment screws and washers just enough to still be able to move the motor.	Screws: 3HAB3409-212 (M4x16). 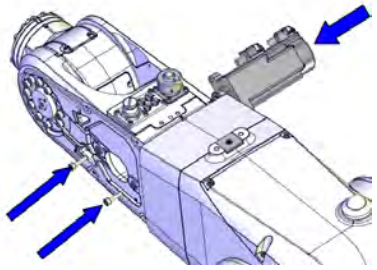 xx1300002463 **Note** Only use specified screws, never replace them with other screws.

Securing the axis-5 motor and timing belt

	Action	Note
1	Clean Room robots: clean the joints that have been opened. See *Replacing parts on the robot on page 138*	
2	Refit the timing belt on the pulley.	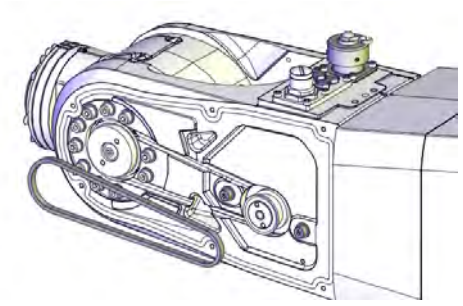 xx1300002351
3	Move the motor to a position where a good timing belt tension is reached (F = 26 N).	**Note** Do not strech the timing belt too much!
4	Secure the motor with its attachment screws.	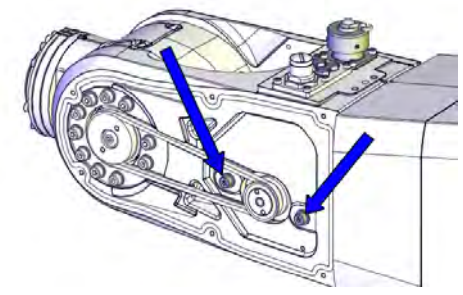 xx1300002350 Tightening torque: 3.5 Nm.

Continues on next page

© Copyright 2014 - 2017 ABB. All rights reserved.

4.6.4 Replacing the axis-4 gearbox, drive shaft and pulley

Continued

	Action	Note
5	Clean Room robots: seal and paint the joints that have been opened. See *Replacing parts on the robot on page 138* **Note** After all repair work, wipe the robot free from particles with spirit on a lint free cloth.	

Connecting the axis-5 motor FPC connectors

	Action	Note
1	Connect the axis-5 FPC connectors and snap them to their holders.	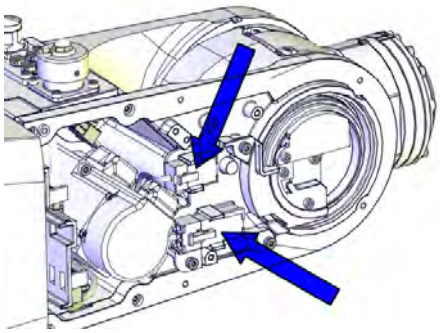 xx1300002390

Connecting the axis-5 motor connectors

	Action	Note
1	Reconnect the motor cables. • R3.MP5 • R3.ME5	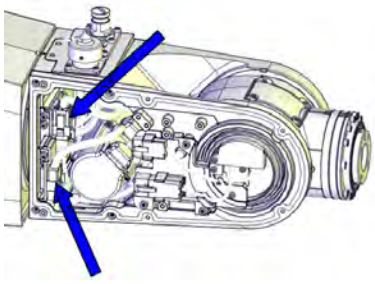 xx1300002360

Refitting the wrist covers

	Action	Note
1	Clean Room robots: clean the joints that have been opened. See *Replacing parts on the robot on page 138*	

Continues on next page

© Copyright 2014 - 2017 ABB. All rights reserved.

	Action	Note
2	**For robots with protection class IP67 (option 287-10)** **For robots with protection type Foundry Plus (option 287-3)** **For robots with with protection type Clean Room** **For robots with food grade lubrication** Check the tubular cover gasket. Replace if damaged.	Gasket for tubular cover: 3HAC058822-001 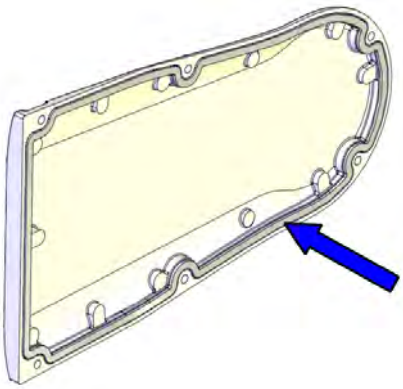 xx1400000034
3	**For robots with protection class IP67 (option 287-10)** **For robots with protection type Foundry Plus (option 287-3)** **For robots with with protection type Clean Room** **For robots with food grade lubrication** Check the tubular cable housing cover gasket. Replace if damaged.	Gasket for tubular cable housing cover: 3HAC056707-001 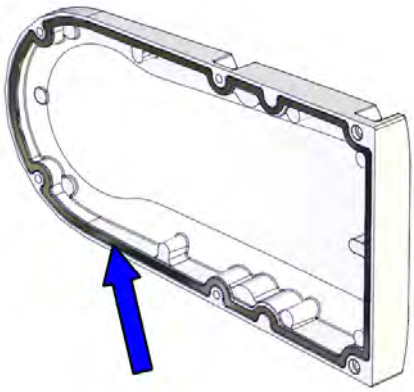 xx1400000345

Continues on next page

© Copyright 2014 - 2017 ABB. All rights reserved.

4.6.4 Replacing the axis-4 gearbox, drive shaft and pulley

Continued

	Action	Note
4	Refit the both covers to the wrist. **For robots with protection class IP67 (option 287-10)** **For robots with protection type Foundry Plus (option 287-3)** Apply locking liquid Loctite 243 to the two front screws on the left hand side cover, encircled in the figure. Remember to refit the extra two screws and washers to the tubular cover. **For robots with protection type Clean Room** Remember to refit the extra two screws and washers to the tubular cover.	Screws: 3HAB3409-207 (M3x8). Tightening torque: 1.5 Nm. For robots with protection class IP67 (option 287-10) For robots with protection type Foundry Plus (option 287-3) 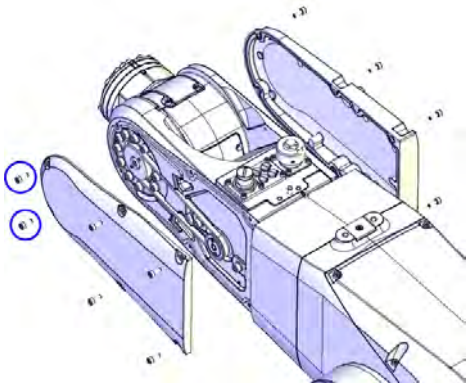 xx1300002349 For robots with protection type Clean Room 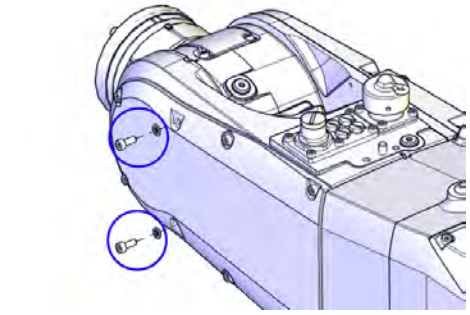 xx1600001153 **Note** Only use specified screws, never replace them with other screws.
5	Clean Room robots: seal and paint the joints that have been opened. See *Replacing parts on the robot on page 138* **Note** After all repair work, wipe the robot free from particles with spirit on a lint free cloth.	

Continues on next page

© Copyright 2014 - 2017 ABB. All rights reserved.

Concluding procedure

	Action	Note
1	**For robots with protection class IP67 (option 287-10)** **For robots with protection type Foundry Plus (option 287-3)** **For robots with with protection type Clean Room** **For robots with food grade lubrication** Check the gasket. Replace if damaged.	Housing cover gasket (IRB 1200-7/0.7): 3HAC056698-001 Housing cover gasket (IRB 1200-5/0.9): 3HAC056697-001 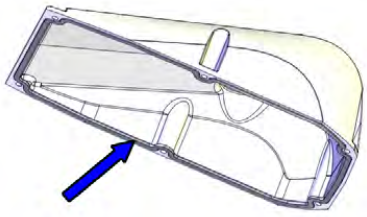 xx1400000477
2	Refit the upper arm housing cover with the screws.	Screws: 3HAB3409-207 (M3x8). Tightening torque: 1.5 Nm. 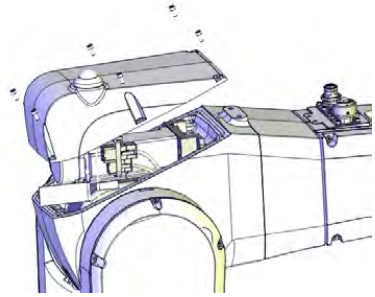 xx1300000456 **Note** Only use specified screws, never replace them with other screws.
3	**For robots with protection type Clean Room** Apply a string of the sealant Sikaflex 521FC to the joint of the upper arm housing cover. Smooth out the sealant string using a finger tip. Use washing-up on finger tips to get a smooth joint. If necessary, add extra sealant to get a full cover joint.	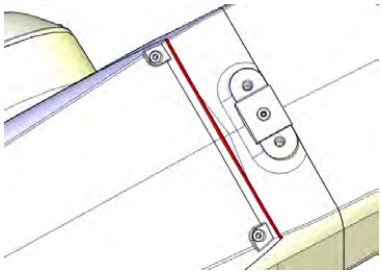 xx1600000215
4	For robots with protection type Clean Room: Clean and paint the joints that have been opened. See *Replacing parts on the robot on page 138* **Note** After all repair work, wipe the Clean Room robot free from particles with spirit on a lint free cloth.	
5	Recalibrate the robot.	Calibration is detailed in section *Calibration on page 733*.

Continues on next page

© Copyright 2014 - 2017 ABB. All rights reserved.

4.6.4 Replacing the axis-4 gearbox, drive shaft and pulley
Continued

	Action	Note
6	 **DANGER** Make sure all safety requirements are met when performing the first test run. These are further detailed in the section *DANGER - First test run may cause injury or damage! on page 48*.	

© Copyright 2014 - 2017 ABB. All rights reserved.

4.6.5 Replacing the axis-4 motor with pulley

Location of motor

The axis-4 motor is located as shown in the figure.

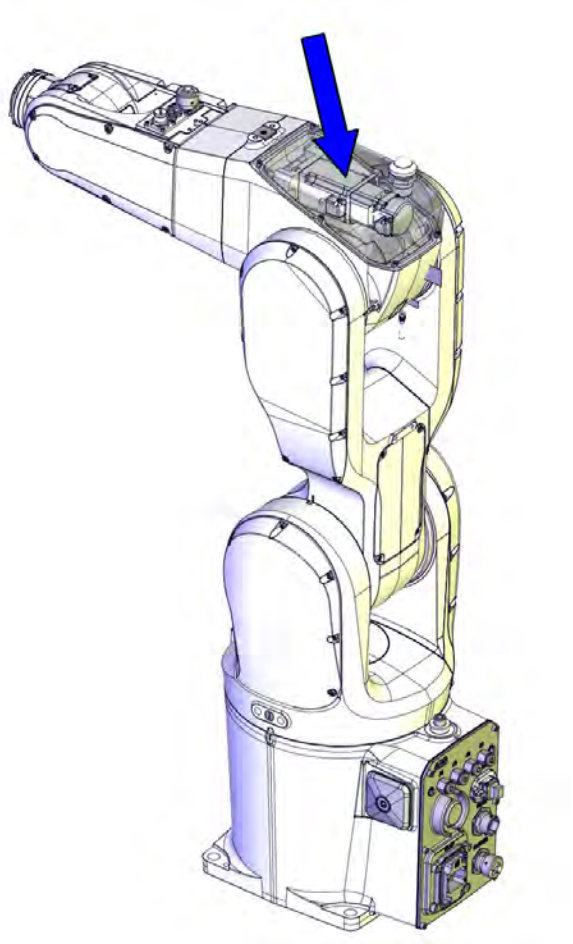

xx1300002474

Required spare parts

Note

The spare part numbers that are listed in the table can be out of date. See the latest revision of *Product manual, spare parts - IRB 1200* on ABB Library.

Spare part	Article number	Note
Motor with pulley	3HAC045827-001	
Motor with pulley, SafeMove 2-supported.	3HAC061277-001	Used for IRB 1200 Type B. See *Type B of IRB 1200 on page 792*.
Motor flange	3HAC047479-001	Replace if damaged.
Motor bracket	3HAC044689-001	Replace if damaged.

Continues on next page

© Copyright 2014 - 2017 ABB. All rights reserved.

4.6.5 Replacing the axis-4 motor with pulley
Continued

Spare part	Article number	Note
Housing cover gasket (IRB 1200-7/0.7)	3HAC056698-001	Not used with protection class IP40. Replace if damaged.
Housing cover gasket (IRB 1200-5/0.9)	3HAC056697-001	Not used with protection class IP40. Replace if damaged.

Required tools and equipment

Equipment, etc.	Article number	Note
Calibration toolkit, manual calibration	3HAC051256-001	Includes calibration tools, pins and attachment screws for manual calibration method. [i]
24 VDC power supply	-	Used to release the motor brakes.
Standard toolkit	-	Content is defined in section *Standard toolkit on page 808*.

[i] The robot is calibrated by either manual calibration or Axis Calibration at factory. Always use the same calibration method as used at the factory.
Information about valid calibration method is found on the calibration label or in the calibration menu on the FlexPendant.
If no data is found related to standard calibration, manual calibration is used as default.

Required consumables

Consumable	Art. no.	Note
Cleaning agent	-	Isopropanol
Cable straps	-	
Sealant	3HAC026759-001	Sikaflex 521FC For robots with protection type Clean Room

Deciding calibration routine

Decide which calibration routine to be used, based on the information in the table. Depending on which routine is chosen, action might be required prior to beginning the repair work of the robot, see the table.

	Action	Note
1	Decide which calibration routine to use for calibrating the robot. • Reference calibration. External cable packages (DressPack) and tools can stay fitted on the robot. • Fine calibration. All external cable packages (DressPack) and tools must be removed from the robot.	**Note** Calibrating axis 6 always requires tools to be removed from the mounting flange (also for reference calibration) since the mounting flange is used for installation of the calibration tool.

Continues on next page

© Copyright 2014 - 2017 ABB. All rights reserved.

	Action	Note
	If the robot is to be calibrated with reference calibration: Find previous reference values for the axis or create new reference values. These values are to be used after the repair procedure is completed, for calibration of the robot. If no previous reference values exist, and no new reference values can be created, then reference calibration is not possible.	Follow the instructions given in the reference calibration routine on the FlexPendant to create reference values. Creating new values requires possibility to move the robot. Read more about reference calibration for Axis Calibration in *Reference calibration routine on page 743*.
	If the robot is to be calibrated with fine calibration: Remove all external cable packages (DressPack) and tools from the robot.	

Removing the motor with pulley

Use these procedures to remove the motor.

Preparations before removing the axis-4 motor

	Action	Note
1	Decide which calibration routine to use, and take actions accordingly prior to beginning the repair procedure.	
2	Jog all axes to zero position.	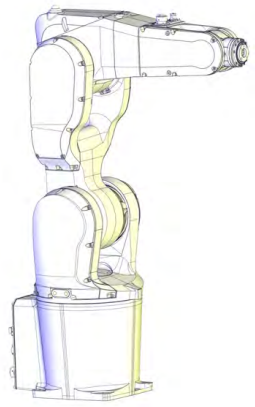 xx1300002581
3	**DANGER** Turn off all: • electric power supply • hydraulic pressure supply • air pressure supply to the robot, before entering the robot working area.	

Continues on next page

© Copyright 2014 - 2017 ABB. All rights reserved.

4.6.5 Replacing the axis-4 motor with pulley

Continued

Disconnecting the axis-4 motor connectors

	Action	Note
1	**DANGER** Make sure that all supplies for electrical power, hydraulic pressure, and air pressure are turned off.	
2	**CAUTION** For robots with protection type Clean Room: Always cut the paint with a knife and grind the paint edge when disassembling parts of the robot! See *Replacing parts on the robot on page 138*	
3	Remove the cover from the upper arm housing. **CAUTION** **For robots with safety lamp (option)** Be aware of the signal lamp cables that are attached inside the housing! Disconnect the lamp cable connectors R3.H1 and R3.H2 and then lift away the cover completely.	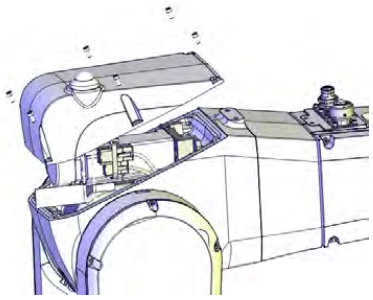 xx1300000456
4	Cut the strap that holds the connectors.	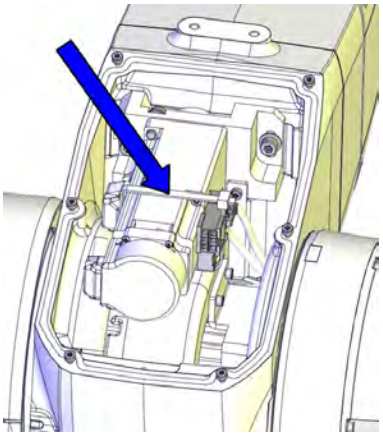 xx1300002494

Continues on next page

© Copyright 2014 - 2017 ABB. All rights reserved.

	Action	Note
5	Disconnect the motor connectors. **Tip** Take photos of the connector and cable position before disconnecting them, to have as a reference when reconnecting.	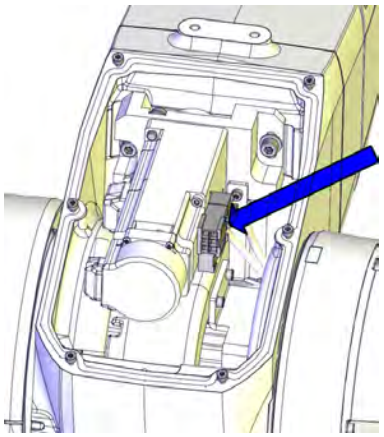 xx1300002495

Removing the axis-4 motor

	Action	Note
1	**DANGER** Make sure that all supplies for electrical power, hydraulic pressure, and air pressure are turned off.	
2	**CAUTION** For robots with protection type Clean Room: Always cut the paint with a knife and grind the paint edge when disassembling parts of the robot! See *Replacing parts on the robot on page 138*	
3	Loosen the two attachment screws and move the motor downwards to slacken the timing belt.	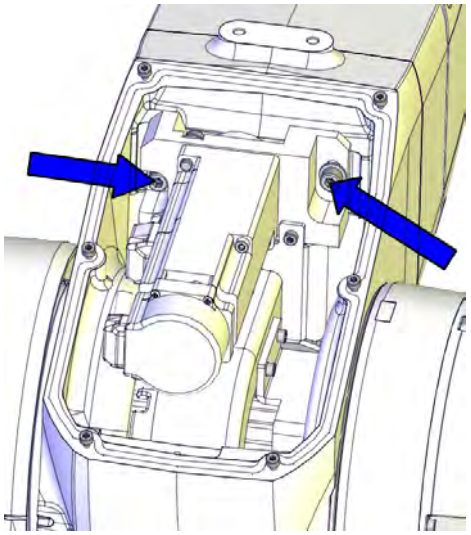 xx1300002524

Continues on next page

© Copyright 2014 - 2017 ABB. All rights reserved.

4.6.5 Replacing the axis-4 motor with pulley

Continued

	Action	Note
4	Remove the motor screws and washers and carefully lift out the motor and the pulley.	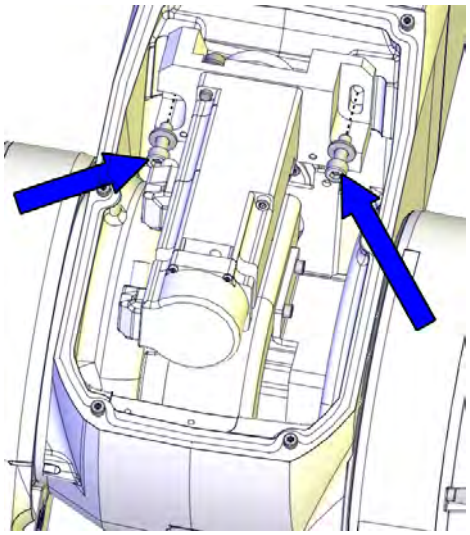 xx1300002522
5	Remove the timing belt from its groove on the motor.	

Separating the axis-4 motor from the motor flange

	Action	Note
1	**DANGER** Make sure that all supplies for electrical power, hydraulic pressure, and air pressure are turned off.	
2	**CAUTION** For robots with protection type Clean Room: Always cut the paint with a knife and grind the paint edge when disassembling parts of the robot! See *Replacing parts on the robot on page 138*	
3	Remove the motor flange and bracket from the motor by removing the screws.	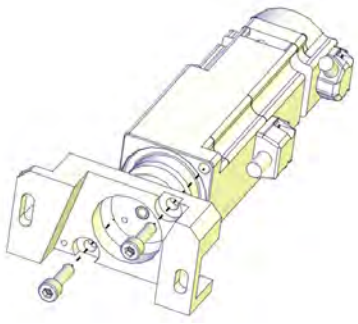 xx1300002523

Continues on next page

© Copyright 2014 - 2017 ABB. All rights reserved.

Refitting the motor with pulley

Use these procedures to refit the motor.

Fitting the axis-4 motor to the motor flange

	Action	Note
1	Clean Room robots: clean the joints that have been opened. See *Replacing parts on the robot on page 138*	
2	Refit the motor flange and bracket to the motor with the screws. Replace the flange if damaged.	Motor flange: 3HAC047479-001 Screws: 3HAB3409-14 (M5x16). Tightening torque: 6 Nm. 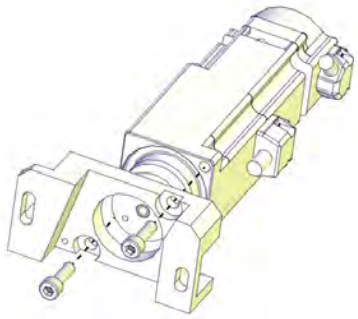 xx1300002523 **Note** Only use specified screws, never replace them with other screws.
3	Clean Room robots: seal and paint the joints that have been opened. See *Replacing parts on the robot on page 138* **Note** After all repair work, wipe the robot free from particles with spirit on a lint free cloth.	

Securing the axis-4 motor

	Action	Note
1	Clean Room robots: clean the joints that have been opened. See *Replacing parts on the robot on page 138*	
2	Check that: • all assembly surfaces are clean and undamaged. • the motor is clean and undamaged.	
3	Fit the timing belt to the motor pulley.	

Continues on next page

© Copyright 2014 - 2017 ABB. All rights reserved.

4.6.5 Replacing the axis-4 motor with pulley

Continued

	Action	Note
4	Place the motor at its mounting position and fasten the attachment screws and washers just enough to still be able to move the motor. Position the robot with the connectors directed as shown in the figure. Verify that the top surface of the axis-4 motor is parallel with the mounting flange surface on the housing, shown in the figure, when moving the motor.	Screws: 3HAB3409-14 (M5x16). 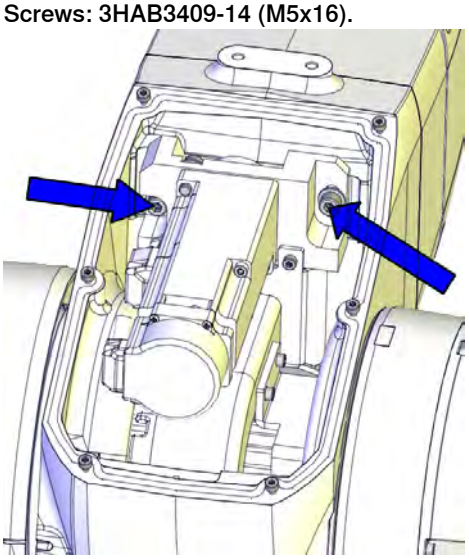 xx1300002524 **Note** Only use specified screws, never replace them with other screws. 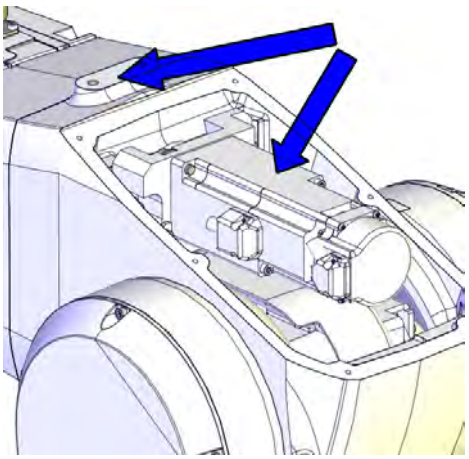 xx1300002612
5	Install the timing belt to the pulleys and verify that the belt runs correctly in the grooves of the pulleys.	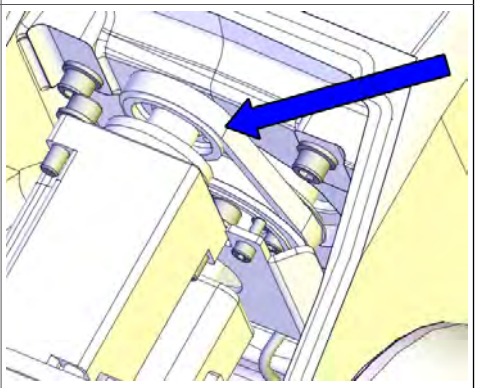 xx1300002525

Continues on next page

© Copyright 2014 - 2017 ABB. All rights reserved.

	Action	Note
6	Move the motor to achieve correct belt tension (F = 30 N).	Belt tension: F = 30 N.
7	Secure the motor with its attachment screws.	Tightening torque: 6 Nm.
8	Clean Room robots: seal and paint the joints that have been opened. See *Replacing parts on the robot on page 138* **Note** After all repair work, wipe the robot free from particles with spirit on a lint free cloth.	

Connecting the axis-4 motor connectors

	Action	Note
1	Reconnect the motor connectors.	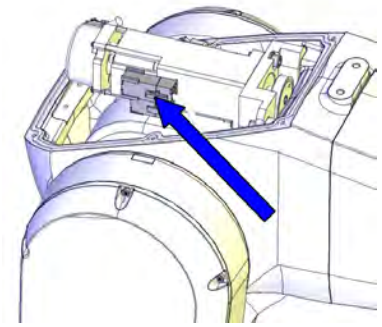 xx1300002371
2	Secure the connectors to the motor with a cable strap.	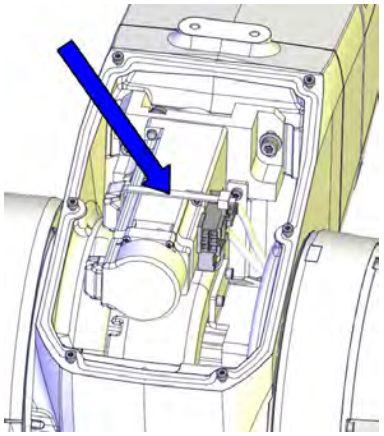 xx1300002494

Continues on next page

© Copyright 2014 - 2017 ABB. All rights reserved.

4.6.5 Replacing the axis-4 motor with pulley

Continued

Concluding procedure

	Action	Note
1	**For robots with protection class IP67 (option 287-10)** **For robots with protection type Foundry Plus (option 287-3)** **For robots with with protection type Clean Room** **For robots with food grade lubrication** Check the gasket. Replace if damaged.	Housing cover gasket (IRB 1200-7/0.7): 3HAC056698-001 Housing cover gasket (IRB 1200-5/0.9): 3HAC056697-001 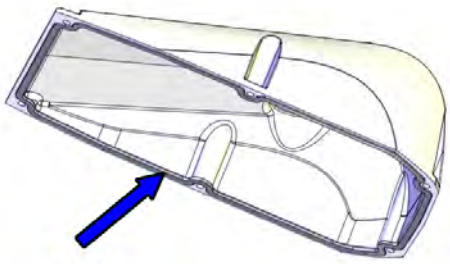 xx1400000477
2	Refit the upper arm housing cover with the screws.	Screws: 3HAB3409-207 (M3x8). Tightening torque: 1.5 Nm. 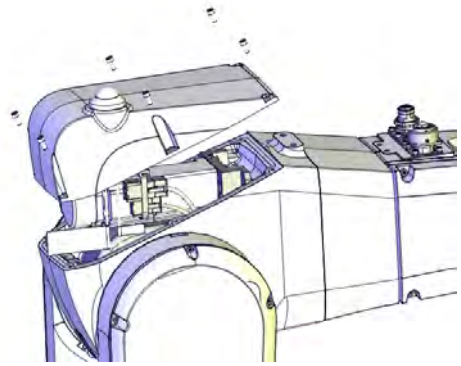 xx1300000456 **Note** Only use specified screws, never replace them with other screws.
3	**For robots with protection type Clean Room** Apply a string of the sealant Sikaflex 521FC to the joint of the upper arm housing cover. Smooth out the sealant string using a finger tip. Use washing-up on finger tips to get a smooth joint. If necessary, add extra sealant to get a full cover joint.	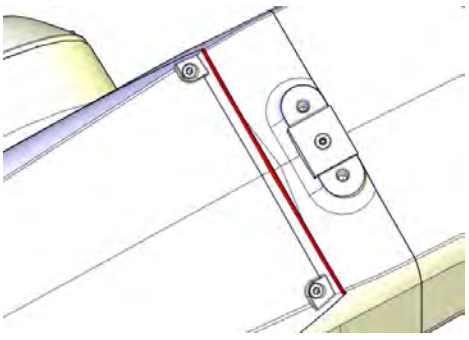 xx1600000215

Continues on next page

© Copyright 2014 - 2017 ABB. All rights reserved.

	Action	Note
4	For robots with protection type Clean Room: Clean and paint the joints that have been opened. See *Replacing parts on the robot on page 138* **Note** After all repair work, wipe the Clean Room robot free from particles with spirit on a lint free cloth.	
5	Recalibrate the robot.	Calibration information is included in section *Calibration on page 733*.
6	**DANGER** Make sure all safety requirements are met when performing the first test run. These are further detailed in the section *DANGER - First test run may cause injury or damage! on page 48*.	

© Copyright 2014 - 2017 ABB. All rights reserved.

4.6.6 Replacing the axis-4 timing belt

Location of timing belt

The axis-4 timing belt is located as shown in the figure.

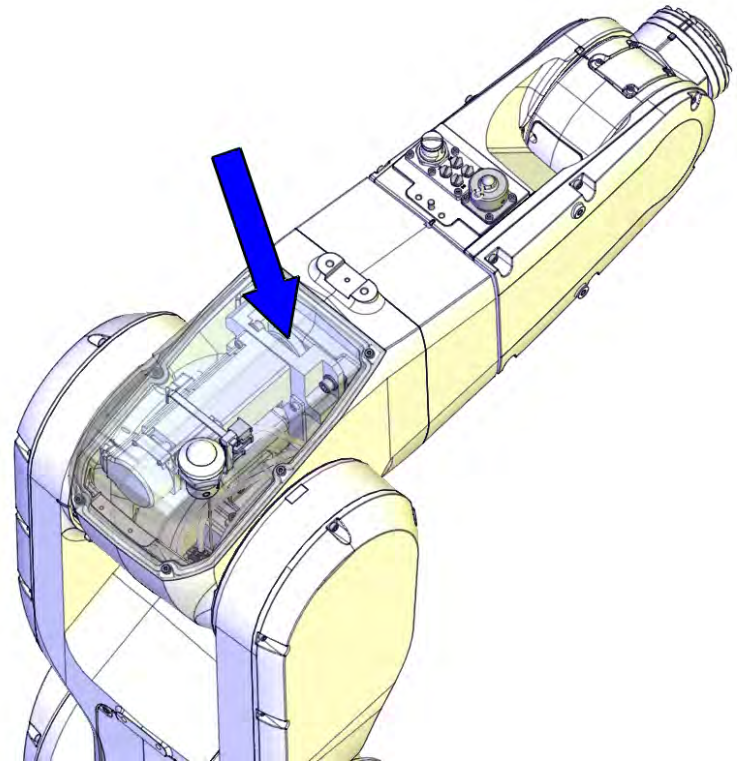

xx1400000036

Required spare parts

Note

The spare part numbers that are listed in the table can be out of date. See the latest revision of *Product manual, spare parts - IRB 1200* on ABB Library.

Spare part	Article number	Note
Timing belt	3HAC044694-001	
Gasket on cable housing cover	3HAC056724-001	Not used with protection class IP40. Replace if damaged.
Housing cover gasket (IRB 1200-7/0.7)	3HAC056698-001	Not used with protection class IP40. Replace if damaged.
Housing cover gasket (IRB 1200-5/0.9)	3HAC056697-001	Not used with protection class IP40. Replace if damaged.

Continues on next page

© Copyright 2014 - 2017 ABB. All rights reserved.

Spare part	Article number	Note
Gasket for tubular cable housing cover	3HAC056707-001	Not used with protection class IP40. Replace if damaged.
Air connector set with Ethernet hole in flange	3HAC049664-001	Includes tubular flange, air connectors and seal bolts. Replace if damaged.
Air connector set without Ethernet hole in flange	3HAC049665-001	Includes tubular flange, air connectors and seal bolts. Replace if damaged.

Required tools and equipment

Equipment, etc.	Article number	Note
24 VDC power supply	-	Used to release the motor brakes.
Standard toolkit	-	Content is defined in section *Standard toolkit on page 808*.

Required consumables

Consumable	Art. no.	Note
Cleaning agent	-	Isopropanol
Cable straps	-	
Sealant	3HAC026759-001	Sikaflex 521FC For robots with protection type Clean Room

Deciding calibration routine

Decide which calibration routine to be used, based on the information in the table. Depending on which routine is chosen, action might be required prior to beginning the repair work of the robot, see the table.

	Action	Note
1	Decide which calibration routine to use for calibrating the robot. • Reference calibration. External cable packages (DressPack) and tools can stay fitted on the robot. • Fine calibration. All external cable packages (DressPack) and tools must be removed from the robot.	**Note** Calibrating axis 6 always requires tools to be removed from the mounting flange (also for reference calibration) since the mounting flange is used for installation of the calibration tool.
	If the robot is to be calibrated with reference calibration: Find previous reference values for the axis or create new reference values. These values are to be used after the repair procedure is completed, for calibration of the robot. If no previous reference values exist, and no new reference values can be created, then reference calibration is not possible.	Follow the instructions given in the reference calibration routine on the FlexPendant to create reference values. Creating new values requires possibility to move the robot. Read more about reference calibration for Axis Calibration in *Reference calibration routine on page 743*.

Continues on next page

© Copyright 2014 - 2017 ABB. All rights reserved.

4.6.6 Replacing the axis-4 timing belt
Continued

	Action	Note
	If the robot is to be calibrated with fine calibration: Remove all external cable packages (DressPack) and tools from the robot.	

Removing the timing belt

Use these procedures to remove the axis-4 timing belt.

Preparations before removing the axis-4 timing belt

	Action	Note
1	Decide which calibration routine to use, and take actions accordingly prior to beginning the repair procedure.	
2	Jog all axes to zero position.	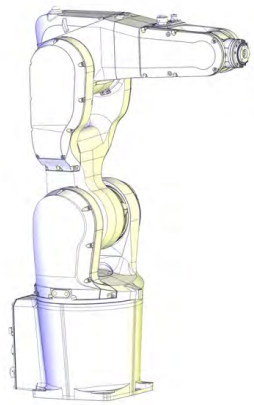 xx1300002581
3	**DANGER** Turn off all: • electric power supply • hydraulic pressure supply • air pressure supply to the robot, before entering the robot working area.	
4	**CAUTION** For robots with protection type Clean Room: Always cut the paint with a knife and grind the paint edge when disassembling parts of the robot! See *Replacing parts on the robot on page 138*	

Continues on next page

© Copyright 2014 - 2017 ABB. All rights reserved.

	Action	Note
5	Remove the lower arm cable housing cover.	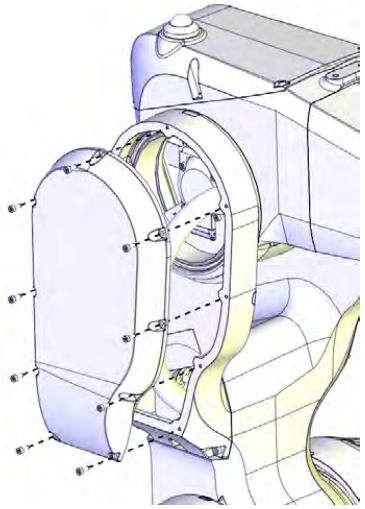 xx1300002400
6	Remove the tubular cable housing cover.	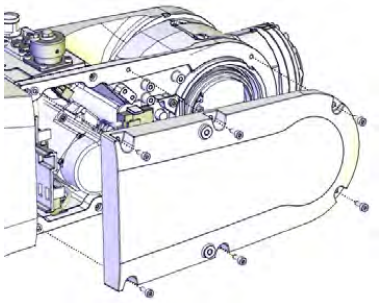 xx1300002389
7	Disconnect the air hoses.	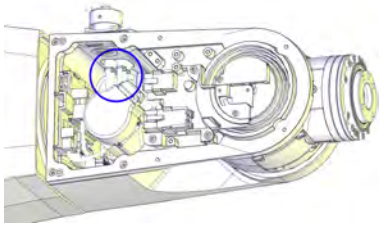 xx1400002327

Disconnecting the axis-4 motor connectors

	Action	Note
1	**DANGER** Make sure that all supplies for electrical power, hydraulic pressure, and air pressure are turned off.	

Continues on next page

© Copyright 2014 - 2017 ABB. All rights reserved.

4.6.6 Replacing the axis-4 timing belt

Continued

	Action	Note
2	**CAUTION** For robots with protection type Clean Room: Always cut the paint with a knife and grind the paint edge when disassembling parts of the robot! See *Replacing parts on the robot on page 138*	
3	Remove the cover from the upper arm housing. **CAUTION** **For robots with safety lamp (option)** Be aware of the signal lamp cables that are attached inside the housing! Disconnect the lamp cable connectors R3.H1 and R3.H2 and then lift away the cover completely.	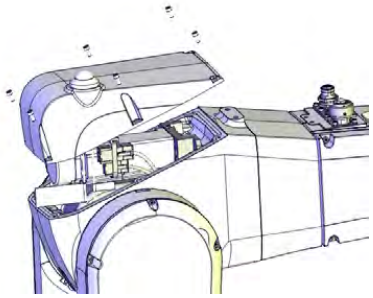 xx1300000456
4	Cut the strap that holds the connectors.	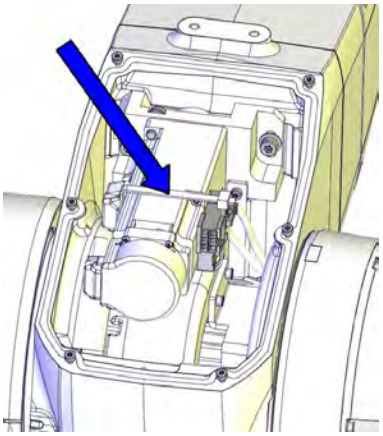 xx1300002494
5	Disconnect the motor connectors. **Tip** Take photos of the connector and cable position before disconnecting them, to have as a reference when reconnecting.	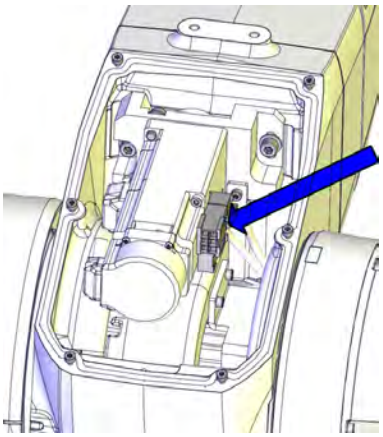 xx1300002495

Continues on next page

© Copyright 2014 - 2017 ABB. All rights reserved.

Removing the axis-4 motor

	Action	Note
1	**DANGER** Make sure that all supplies for electrical power, hydraulic pressure, and air pressure are turned off.	
2	**CAUTION** For robots with protection type Clean Room: Always cut the paint with a knife and grind the paint edge when disassembling parts of the robot! See *Replacing parts on the robot on page 138*	
3	Loosen the two attachment screws and move the motor downwards to slacken the timing belt.	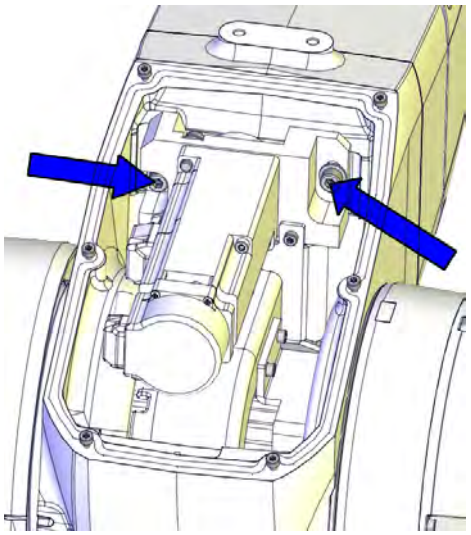 xx1300002524
4	Remove the motor screws and washers and carefully lift out the motor and the pulley.	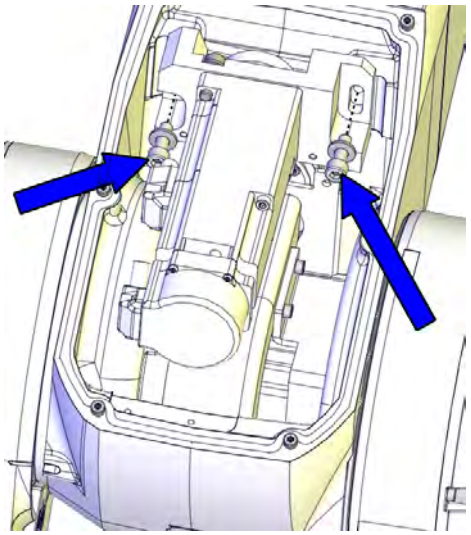 xx1300002522

Continues on next page

© Copyright 2014 - 2017 ABB. All rights reserved.

4.6.6 Replacing the axis-4 timing belt

Continued

	Action	Note
5	Remove the timing belt from its groove on the motor.	

Removing the air hoses

	Action	Note
1	**DANGER** Make sure that all supplies for electrical power, hydraulic pressure, and air pressure are turned off.	
2	**CAUTION** For robots with protection type Clean Room: Always cut the paint with a knife and grind the paint edge when disassembling parts of the robot! See *Replacing parts on the robot on page 138*	
3	Remove the plastic protection plate by removing its screws.	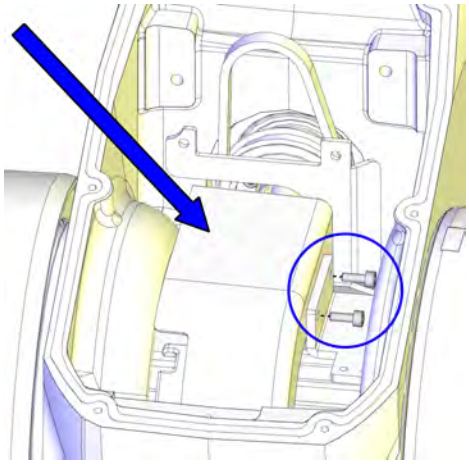 xx1400000797
4	Pull in the air hoses into the housing, out from the housing extender unit.	

Removing the axis-4 timing belt

	Action	Note
1	**CAUTION** For robots with protection type Clean Room: Always cut the paint with a knife and grind the paint edge when disassembling parts of the robot! See *Replacing parts on the robot on page 138*	
2	Remove the axis-4 timing belt.	

Continues on next page

© Copyright 2014 - 2017 ABB. All rights reserved.

Refitting the timing belt

Use these procedures to refit the axis-4 timing belt.

Refitting the axis-4 timing belt and the air hoses

	Action	Note
1	**DANGER** Make sure that all supplies for electrical power, hydraulic pressure, and air pressure are turned off.	
2	Clean Room robots: clean the joints that have been opened. See *Replacing parts on the robot on page 138*	
3	Place the timing belt at the gear pulley and run the air hoses through the belt.	
4	Install the air hoses in and through the housing extender unit.	
5	Refit the plastic protection plate with its screws.	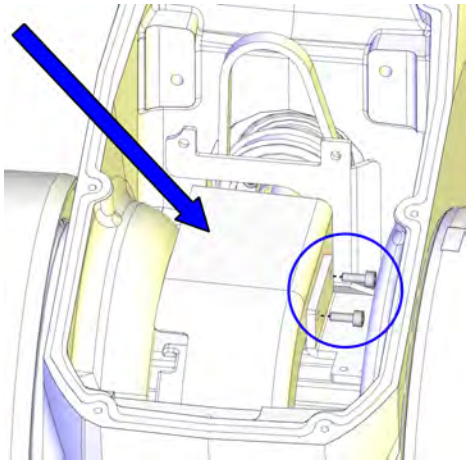 xx1400000797
6	Clean Room robots: seal and paint the joints that have been opened. See *Replacing parts on the robot on page 138* **Note** After all repair work, wipe the robot free from particles with spirit on a lint free cloth.	

Securing the axis-4 motor

	Action	Note
1	Clean Room robots: clean the joints that have been opened. See *Replacing parts on the robot on page 138*	
2	Check that: • all assembly surfaces are clean and undamaged. • the motor is clean and undamaged.	

Continues on next page

© Copyright 2014 - 2017 ABB. All rights reserved.

4.6.6 Replacing the axis-4 timing belt

Continued

	Action	Note
3	Fit the timing belt to the motor pulley.	
4	Place the motor at its mounting position and fasten the attachment screws and washers just enough to still be able to move the motor. Position the robot with the connectors directed as shown in the figure. Verify that the top surface of the axis-4 motor is parallel with the mounting flange surface on the housing, shown in the figure, when moving the motor.	Screws: 3HAB3409-14 (M5x16). 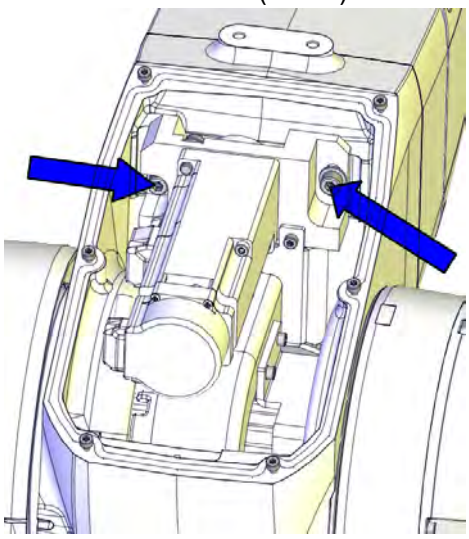 xx1300002524 **Note** Only use specified screws, never replace them with other screws. 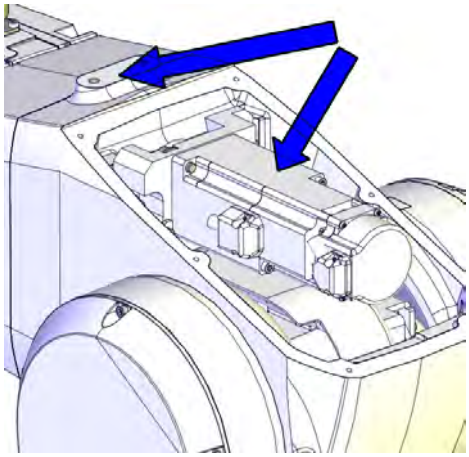 xx1300002612
5	Install the timing belt to the pulleys and verify that the belt runs correctly in the grooves of the pulleys.	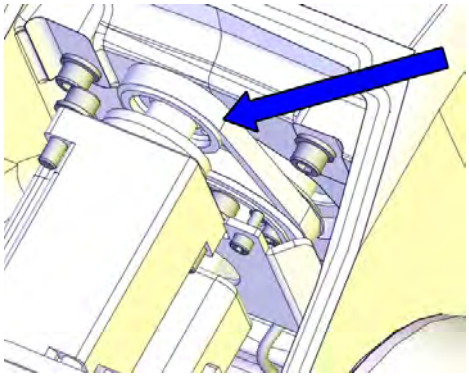 xx1300002525

Continues on next page

© Copyright 2014 - 2017 ABB. All rights reserved.

	Action	Note
6	Move the motor to achieve correct belt tension (F = 30 N).	Belt tension: F = 30 N.
7	Secure the motor with its attachment screws.	Tightening torque: 6 Nm.
8	Clean Room robots: seal and paint the joints that have been opened. See *Replacing parts on the robot on page 138* **Note** After all repair work, wipe the robot free from particles with spirit on a lint free cloth.	

Connecting the axis-4 motor connectors

	Action	Note
1	Reconnect the motor connectors.	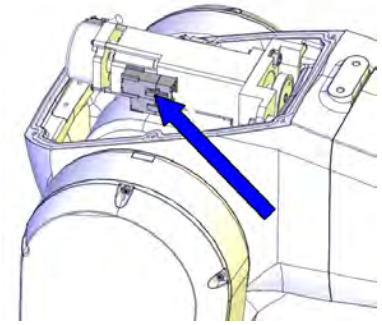 xx1300002371
2	Secure the connectors to the motor with a cable strap.	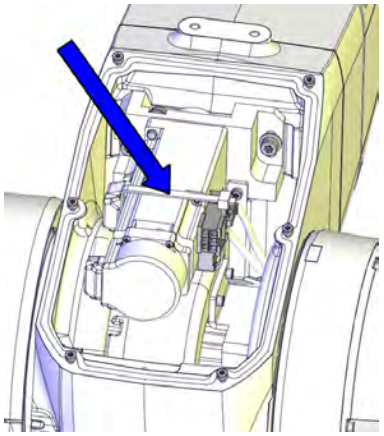 xx1300002494

Continues on next page

© Copyright 2014 - 2017 ABB. All rights reserved.

4.6.6 Replacing the axis-4 timing belt

Continued

Connecting the air hoses

	Action	Note
1	Reconnect the air hoses.	Air connector set with Ethernet hole in flange: 3HAC049664-001 Air connector set without Ethernet hole in flange: 3HAC049665-001 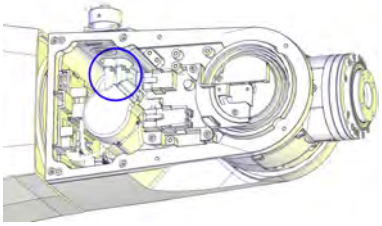 xx1400002327
2	If equipped, reconnect the CP/CS cables. **For robots with protection class IP67 (option 287-10)** **For robots with protection type Foundry Plus (option 287-3)** 1 Check the gasket. 2 Replace if damaged. **For robots with protection type Clean Room:** 1 Remove residual locking liquid and other pollutants with cleaning agent Loctite 7063. 2 Apply flange sealing Loctite 574 on the mounting surfaces of the CP/CS connector.	On robots with protection class IP67 On robots with protection type Foundry Plus Gasket: 3HAC058567-001 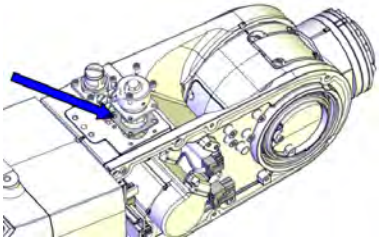 xx1500000251
3	**For robots with protection type Foundry Plus** If required, fit the protection bracket for CP/CS connectors.	Protection bracket for CP/CS connectors: 3HAC058350-001 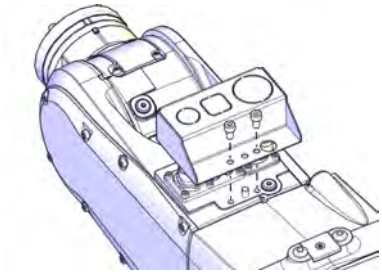 xx1600001152

Refitting the tubular cable housing cover

	Action	Note
1	Clean Room robots: clean the joints that have been opened. See *Replacing parts on the robot on page 138*	

Continues on next page

© Copyright 2014 - 2017 ABB. All rights reserved.

	Action	Note
2	**For robots with protection class IP67 (option 287-10)** **For robots with protection type Foundry Plus (option 287-3)** **For robots with with protection type Clean Room** **For robots with food grade lubrication** Check the tubular cable housing cover gasket. Replace if damaged.	Gasket for tubular cable housing cover: 3HAC056707-001 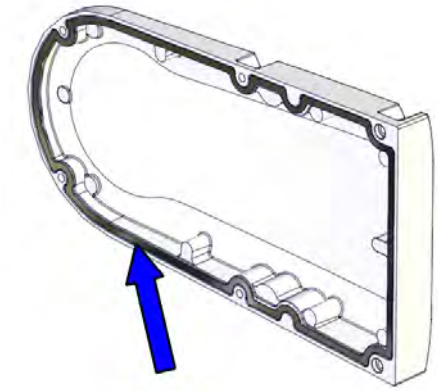 xx1400000345
3	Refit the cover to the cable housing.	Screws: 3HAB3409-207 (M3x8). Tightening torque: 1.5 Nm. 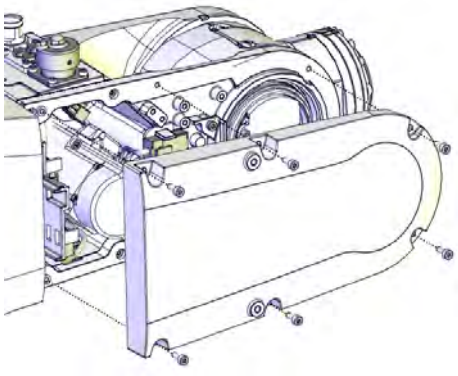 xx1300002389 **Note** Only use specified screws, never replace them with other screws.
4	Clean Room robots: seal and paint the joints that have been opened. See *Replacing parts on the robot on page 138* **Note** After all repair work, wipe the robot free from particles with spirit on a lint free cloth.	

Continues on next page

© Copyright 2014 - 2017 ABB. All rights reserved.

4.6.6 Replacing the axis-4 timing belt

Continued

Concluding procedure

	Action	Note
1	**For robots with protection class IP67 (option 287-10)** **For robots with protection type Foundry Plus (option 287-3)** **For robots with with protection type Clean Room** **For robots with food grade lubrication** Check the gasket. Replace if damaged.	Housing cover gasket (IRB 1200-7/0.7): 3HAC056698-001 Housing cover gasket (IRB 1200-5/0.9): 3HAC056697-001 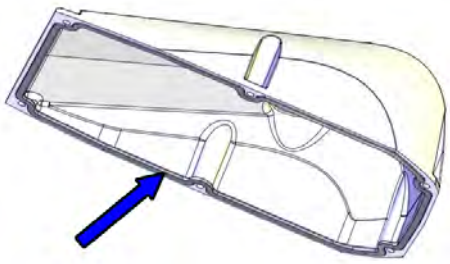 xx1400000477
2	Refit the upper arm housing cover with the screws.	Screws: 3HAB3409-207 (M3x8). Tightening torque: 1.5 Nm. 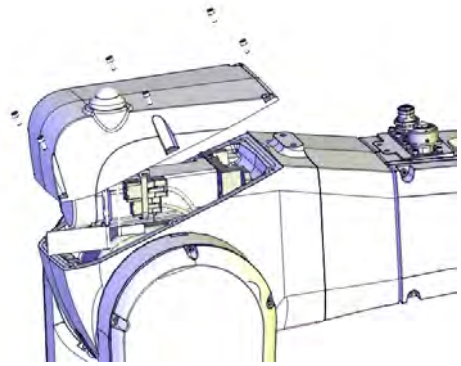 xx1300000456 **Note** Only use specified screws, never replace them with other screws.
3	**For robots with protection type Clean Room** Apply a string of the sealant Sikaflex 521FC to the joint of the upper arm housing cover. Smooth out the sealant string using a finger tip. Use washing-up on finger tips to get a smooth joint. If necessary, add extra sealant to get a full cover joint.	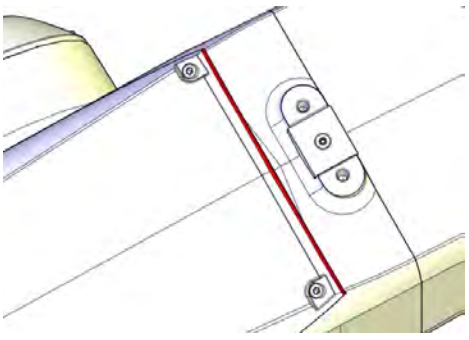 xx1600000215

Continues on next page

© Copyright 2014 - 2017 ABB. All rights reserved.

	Action	Note
4	**For robots with protection class IP67 (option 287-10)** **For robots with protection type Foundry Plus (option 287-3)** **For robots with with protection type Clean Room** **For robots with food grade lubrication** Check the gasket of the cable housing cover. Replace if damaged.	Gasket on cable housing cover: 3HAC056724-001 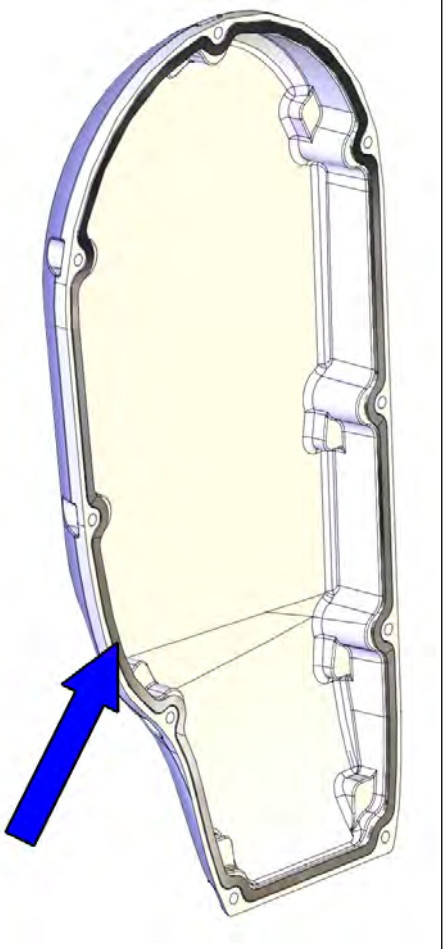 xx1400000048
5	Check the PTFE film on the cable housing cover. Replace if damaged.	PTFE film on cable housing cover: 3HAC044660-001
6	Apply grease to the inner surface of the cable housing cover and the PTFE film surface.	

Continues on next page

© Copyright 2014 - 2017 ABB. All rights reserved.

4.6.6 Replacing the axis-4 timing belt

Continued

	Action	Note
7	Refit the cable housing cover.	Tightening torque: 3HAB3409-207 (M3x8). Tightening torque: 1.5 Nm 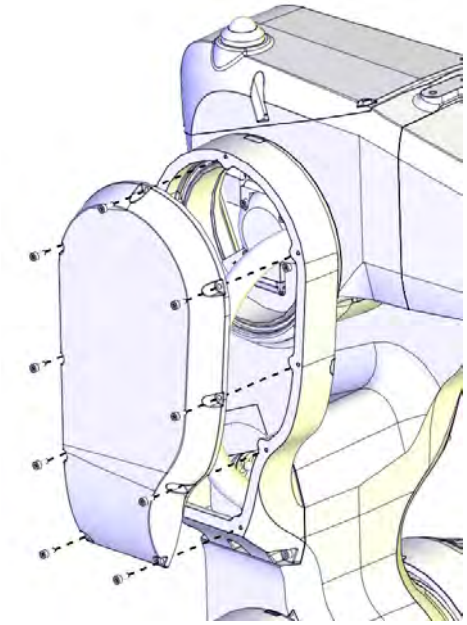 xx1300002400 **Note** Only use specified screws, never replace them with other screws.
8	For robots with protection type Clean Room: Clean and paint the joints that have been opened. See *Replacing parts on the robot on page 138* **Note** After all repair work, wipe the Clean Room robot free from particles with spirit on a lint free cloth.	
9	Recalibrate the robot.	Calibration information is included in section *Calibration on page 733*.
10	**DANGER** Make sure all safety requirements are met when performing the first test run. These are further detailed in the section *DANGER - First test run may cause injury or damage! on page 48*.	

© Copyright 2014 - 2017 ABB. All rights reserved.

4.6.7 Replacing the axis-5 motor with pulley

Location of motor

The axis-5 motor is located as shown in the figure.

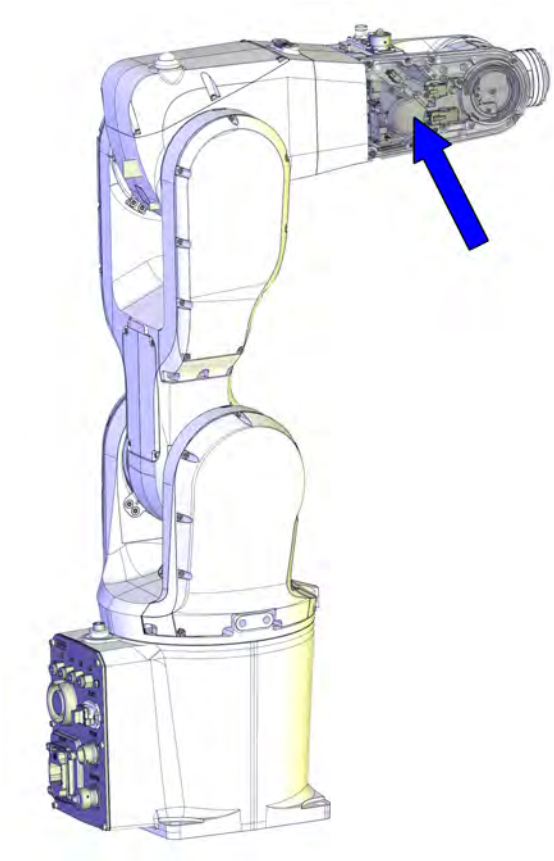

xx1300002473

Required spare parts

Note

The spare part numbers that are listed in the table can be out of date. See the latest revision of *Product manual, spare parts - IRB 1200* on ABB Library.

Equipment, etc.	Article number	Note
Motor with pulley	3HAC045978-001	
Motor with pulley, SafeMove 2-supported.	3HAC061278-001	Used for IRB 1200 Type B. See *Type B of IRB 1200 on page 792*.
Gasket for tubular cover	3HAC058822-001	Not used with protection class IP40. Replace if damaged.
Gasket for tubular cable housing cover	3HAC056707-001	Not used with protection class IP40. Replace if damaged.

Continues on next page

© Copyright 2014 - 2017 ABB. All rights reserved.

4.6.7 Replacing the axis-5 motor with pulley
Continued

Required tools and equipment

Equipment, etc.	Article number	Note
24 VDC power supply	-	Used to release the motor brakes.
Calibration toolkit, manual calibration	3HAC051256-001	Includes calibration tools, pins and attachment screws for manual calibration method. [i]
Standard toolkit	-	Content is defined in section *Standard toolkit on page 808*.

[i] The robot is calibrated by either manual calibration or Axis Calibration at factory. Always use the same calibration method as used at the factory.
Information about valid calibration method is found on the calibration label or in the calibration menu on the FlexPendant.
If no data is found related to standard calibration, manual calibration is used as default.

Required consumables

Consumable	Art. no.	Note
Cleaning agent	-	Isopropanol
Locking liquid	3HAB7116-1	Loctite 243 For robots with protection class IP67 (option 287-10) For robots with protection type Foundry Plus (option 287-3)

Deciding calibration routine

Decide which calibration routine to be used, based on the information in the table. Depending on which routine is chosen, action might be required prior to beginning the repair work of the robot, see the table.

	Action	Note
1	Decide which calibration routine to use for calibrating the robot. • Reference calibration. External cable packages (DressPack) and tools can stay fitted on the robot. • Fine calibration. All external cable packages (DressPack) and tools must be removed from the robot.	**Note** Calibrating axis 6 always requires tools to be removed from the mounting flange (also for reference calibration) since the mounting flange is used for installation of the calibration tool.
	If the robot is to be calibrated with reference calibration: Find previous reference values for the axis or create new reference values. These values are to be used after the repair procedure is completed, for calibration of the robot. If no previous reference values exist, and no new reference values can be created, then reference calibration is not possible.	Follow the instructions given in the reference calibration routine on the FlexPendant to create reference values. Creating new values requires possibility to move the robot. Read more about reference calibration for Axis Calibration in *Reference calibration routine on page 743*.
	If the robot is to be calibrated with fine calibration: Remove all external cable packages (DressPack) and tools from the robot.	

Continues on next page

© Copyright 2014 - 2017 ABB. All rights reserved.

Removing the motor with pulley

Preparations before removing the axis-5 motor, pulley or shaft

	Action	Note
1	Decide which calibration routine to use, and take actions accordingly prior to beginning the repair procedure.	
2	Jog all axes to zero position.	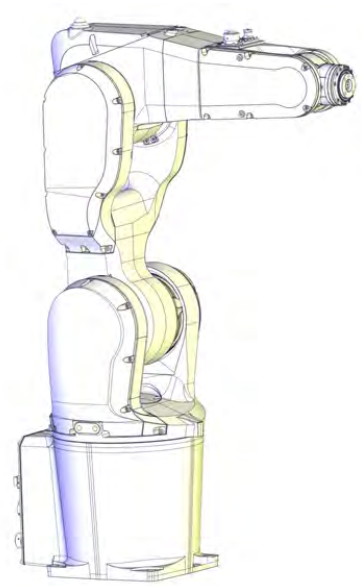 xx1300002581
3	**DANGER** Turn off all: • electric power supply • hydraulic pressure supply • air pressure supply to the robot, before entering the robot working area.	

Getting access to inside of the wrist unit

	Action	Note
1	**DANGER** Make sure that all supplies for electrical power, hydraulic pressure, and air pressure are turned off.	
2	**CAUTION** For robots with protection type Clean Room: Always cut the paint with a knife and grind the paint edge when disassembling parts of the robot! See *Replacing parts on the robot on page 138*	

Continues on next page

© Copyright 2014 - 2017 ABB. All rights reserved.

4.6.7 Replacing the axis-5 motor with pulley

Continued

	Action	Note
3	Remove the covers on each side of the wrist by removing their screws. **Note** **For robots with protection class IP67 (option 287-10)** **For robots with protection type Foundry Plus (option 287-3)** The two front screws on the left hand side cover (encircled in the figure) have been fitted with locking liquid. The tubular cover (left hand side cover) has two extra screws and washers, as encircled in the figure. **Note** **For robots with protection type Clean Room** The tubular cover (left hand side cover) has two extra screws and washers, as encircled in the figure.	For robots with protection class IP67 (option 287-10) For robots with protection type Foundry Plus (option 287-3) 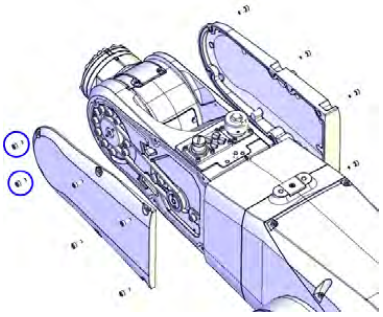 xx1300002349 For robots with protection type Clean Room 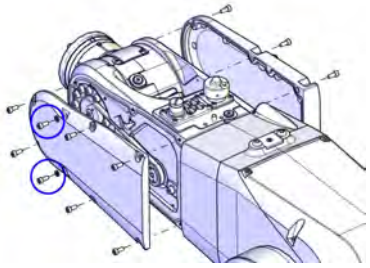 xx1600001148

Disconnecting the axis-5 motor connectors

	Action	Note
1	**DANGER** Make sure that all supplies for electrical power, hydraulic pressure, and air pressure are turned off.	
2	Snap loose the motor connectors from their holders and then disconnect them. • R3.MP5 • R3.ME5 **Tip** Take photos of the connector and cable position before disconnecting them, to have as a reference when reconnecting.	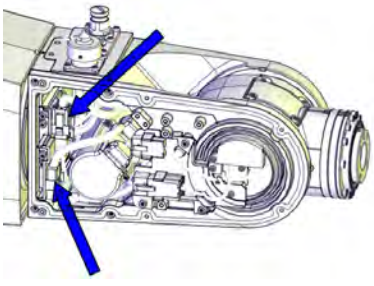 xx1300002360

Continues on next page

© Copyright 2014 - 2017 ABB. All rights reserved.

Removing the axis-5 motor with pulley

	Action	Note
1	**DANGER** Make sure that all supplies for electrical power, hydraulic pressure, and air pressure are turned off.	
2	**CAUTION** For robots with protection type Clean Room: Always cut the paint with a knife and grind the paint edge when disassembling parts of the robot! See *Replacing parts on the robot on page 138*	
3	Loosen the screws so that the motor can be moved sideways.	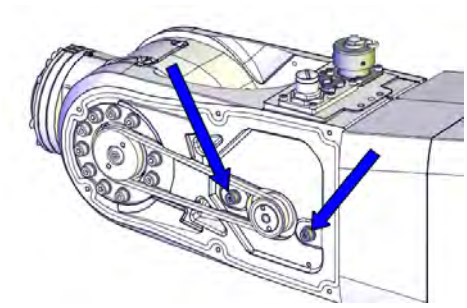 xx1300002350
4	Remove the timing belt.	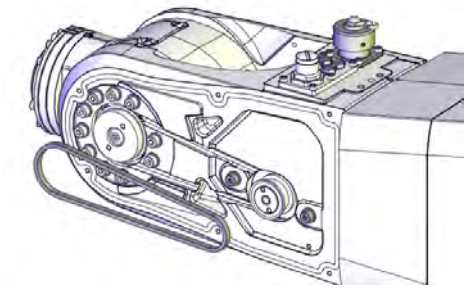 xx1300002351
5	Snap loose and disconnect the axis-5 FPC connectors.	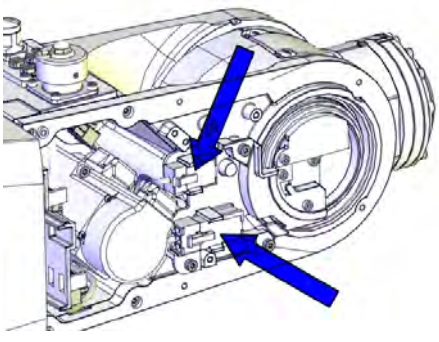 xx1300002390

Continues on next page

© Copyright 2014 - 2017 ABB. All rights reserved.

4.6.7 Replacing the axis-5 motor with pulley
Continued

	Action	Note
6	Remove the screws and pull out the motor.	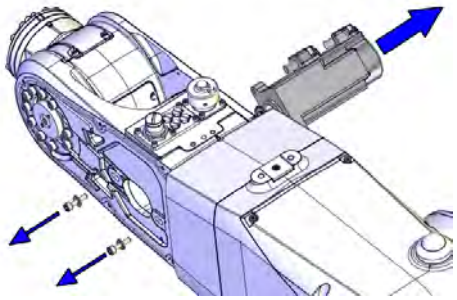 xx1300002352

Refitting the motor with pulley

Preparations before securing the axis-5 motor

	Action	Note
1	Check that: • all assembly surfaces are clean and without damages • the motor is clean and undamaged.	
2	Place the motor at its mounting position and fasten the attachment screws and washers just enough to still be able to move the motor.	Screws: 3HAB3409-212 (M4x16). 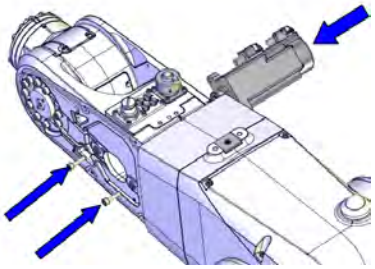 xx1300002463 **Note** Only use specified screws, never replace them with other screws.

Securing the axis-5 motor and timing belt

	Action	Note
1	Clean Room robots: clean the joints that have been opened. See *Replacing parts on the robot on page 138*	

Continues on next page

© Copyright 2014 - 2017 ABB. All rights reserved.

	Action	Note
2	Refit the timing belt on the pulley.	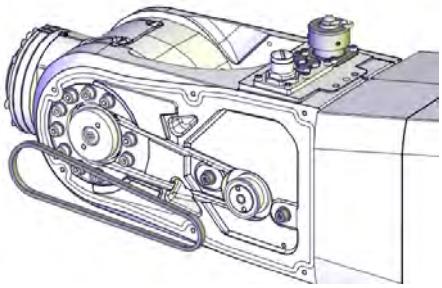 xx1300002351
3	Move the motor to a position where a good timing belt tension is reached (F = 26 N).	**Note** Do not strech the timing belt too much!
4	Secure the motor with its attachment screws.	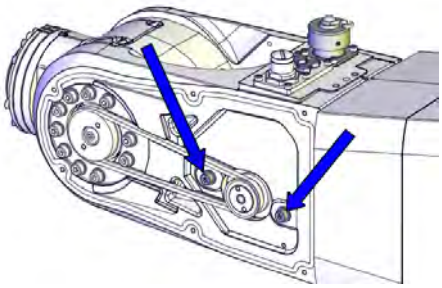 xx1300002350 Tightening torque: 3.5 Nm.
5	Clean Room robots: seal and paint the joints that have been opened. See *Replacing parts on the robot on page 138* **Note** After all repair work, wipe the robot free from particles with spirit on a lint free cloth.	

Connecting the axis-5 motor FPC connectors

	Action	Note
1	Connect the axis-5 FPC connectors and snap them to their holders.	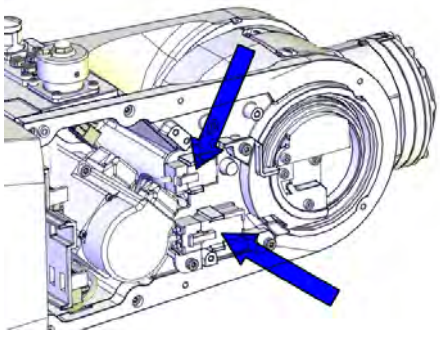 xx1300002390

Continues on next page

© Copyright 2014 - 2017 ABB. All rights reserved.

4.6.7 Replacing the axis-5 motor with pulley

Continued

Connecting the axis-5 motor connectors

	Action	Note
1	Reconnect the motor cables. • R3.MP5 • R3.ME5	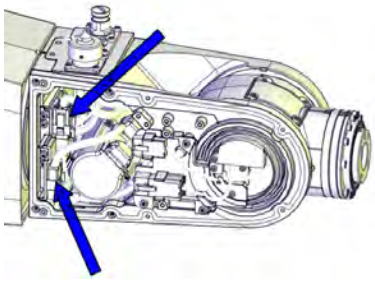 xx1300002360

Refitting the wrist covers

	Action	Note
1	Clean Room robots: clean the joints that have been opened. See *Replacing parts on the robot on page 138*	
2	**For robots with protection class IP67 (option 287-10)** **For robots with protection type Foundry Plus (option 287-3)** **For robots with with protection type Clean Room** **For robots with food grade lubrication** Check the tubular cover gasket. Replace if damaged.	Gasket for tubular cover: 3HAC058822-001 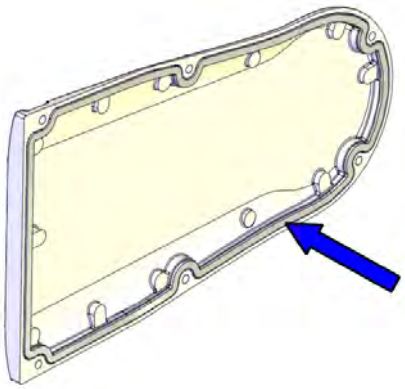 xx1400000034
3	**For robots with protection class IP67 (option 287-10)** **For robots with protection type Foundry Plus (option 287-3)** **For robots with with protection type Clean Room** **For robots with food grade lubrication** Check the tubular cable housing cover gasket. Replace if damaged.	Gasket for tubular cable housing cover: 3HAC056707-001 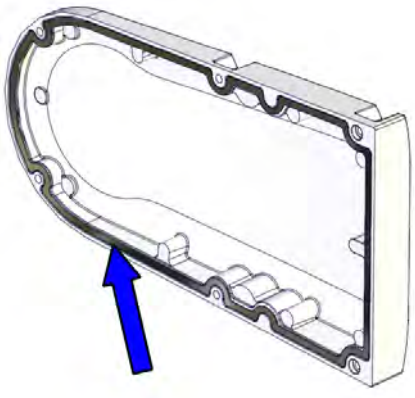 xx1400000345

Continues on next page

© Copyright 2014 - 2017 ABB. All rights reserved.

	Action	Note
4	Refit the both covers to the wrist. **For robots with protection class IP67 (option 287-10)** **For robots with protection type Foundry Plus (option 287-3)** Apply locking liquid Loctite 243 to the two front screws on the left hand side cover, encircled in the figure. Remember to refit the extra two screws and washers to the tubular cover. **For robots with protection type Clean Room** Remember to refit the extra two screws and washers to the tubular cover.	Screws: 3HAB3409-207 (M3x8). Tightening torque: 1.5 Nm. For robots with protection class IP67 (option 287-10) For robots with protection type Foundry Plus (option 287-3) 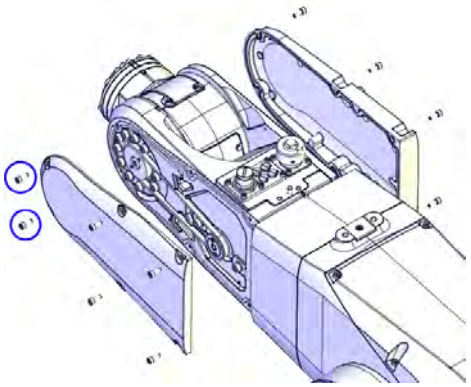 xx1300002349 For robots with protection type Clean Room 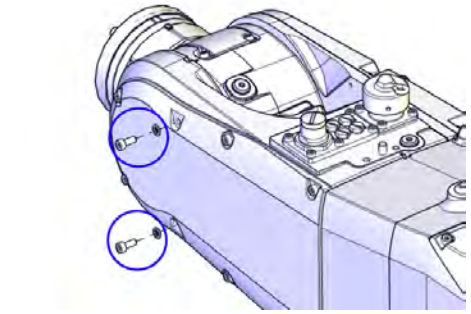 xx1600001153 **Note** Only use specified screws, never replace them with other screws.
5	Clean Room robots: seal and paint the joints that have been opened. See *Replacing parts on the robot on page 138* **Note** After all repair work, wipe the robot free from particles with spirit on a lint free cloth.	

Continues on next page

© Copyright 2014 - 2017 ABB. All rights reserved.

4.6.7 Replacing the axis-5 motor with pulley

Continued

Concluding procedure

	Action	Note
1	For robots with protection type Clean Room: Clean and paint the joints that have been opened. See *Replacing parts on the robot on page 138*  **Note** After all repair work, wipe the Clean Room robot free from particles with spirit on a lint free cloth.	
2	Recalibrate the robot.	Calibration information is included in section *Calibration on page 733*.
3	 **DANGER** Make sure all safety requirements are met when performing the first test run. These are further detailed in the section *DANGER - First test run may cause injury or damage! on page 48*.	

© Copyright 2014 - 2017 ABB. All rights reserved.

4.6.8 Replacing the axis-5 timing belt

Location of the timing belt

The axis-5 timing belt is located as shown in the figure.

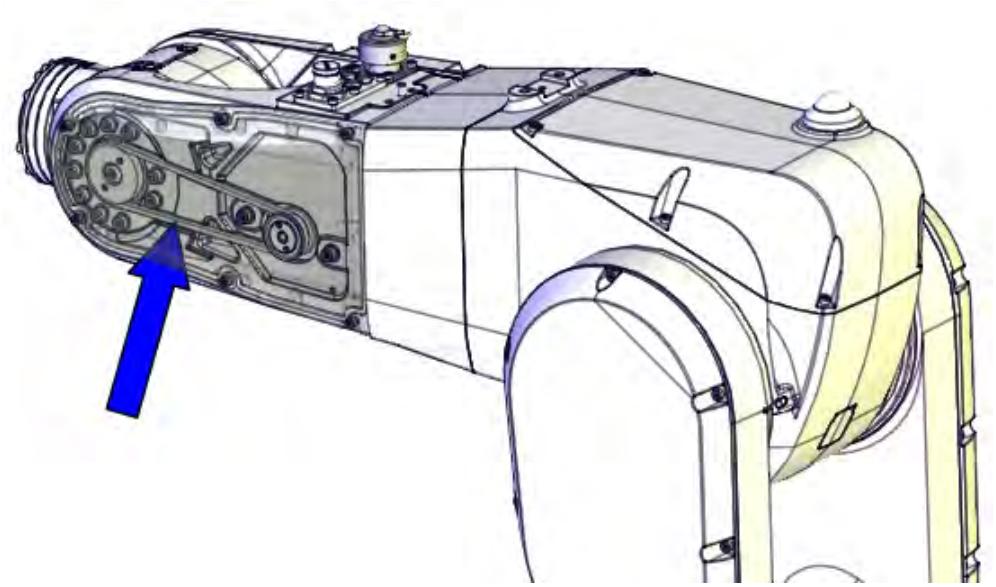

xx1400000032

Required spare parts

Note

The spare part numbers that are listed in the table can be out of date. See the latest revision of *Product manual, spare parts - IRB 1200* on ABB Library.

Spare part	Article number	Note
Timing belt	3HAC044657-001	
Gasket for tubular cover	3HAC058822-001	Not used with protection class IP40. Replace if damaged.

Required tools and equipment

Equipment, etc.	Article number	Note
24 VDC power supply	-	Used to release the motor brakes.
Standard toolkit	-	Content is defined in section *Standard toolkit on page 808*.

Required consumables

Consumable	Art. no.	Note
Cleaning agent	-	Isopropanol

Continues on next page

© Copyright 2014 - 2017 ABB. All rights reserved.

4.6.8 Replacing the axis-5 timing belt
Continued

Consumable	Art. no.	Note
Locking liquid	3HAB7116-1	Loctite 243 For robots with protection class IP67 (option 287-10) For robots with protection type Foundry Plus (option 287-3)

Deciding calibration routine

Decide which calibration routine to be used, based on the information in the table. Depending on which routine is chosen, action might be required prior to beginning the repair work of the robot, see the table.

	Action	Note
1	Decide which calibration routine to use for calibrating the robot. • Reference calibration. External cable packages (DressPack) and tools can stay fitted on the robot. • Fine calibration. All external cable packages (DressPack) and tools must be removed from the robot.	**Note** Calibrating axis 6 always requires tools to be removed from the mounting flange (also for reference calibration) since the mounting flange is used for installation of the calibration tool.
	If the robot is to be calibrated with reference calibration: Find previous reference values for the axis or create new reference values. These values are to be used after the repair procedure is completed, for calibration of the robot. If no previous reference values exist, and no new reference values can be created, then reference calibration is not possible.	Follow the instructions given in the reference calibration routine on the FlexPendant to create reference values. Creating new values requires possibility to move the robot. Read more about reference calibration for Axis Calibration in *Reference calibration routine on page 743*.
	If the robot is to be calibrated with fine calibration: Remove all external cable packages (DressPack) and tools from the robot.	

Removing the timing belt

Use these procedures to remove the axis-5 timing belt.

Preparations before removing the timing belt

	Action	Note
1	Decide which calibration routine to use, and take actions accordingly prior to beginning the repair procedure.	

Continues on next page

© Copyright 2014 - 2017 ABB. All rights reserved.

	Action	Note
2	Jog all axes to zero position.	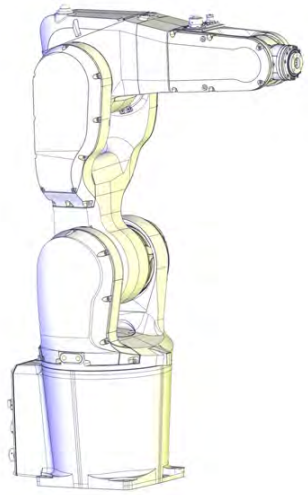 xx1300002581
3	**DANGER** Turn off all: • electric power supply • hydraulic pressure supply • air pressure supply to the robot, before entering the robot working area.	
4	**CAUTION** For robots with protection type Clean Room: Always cut the paint with a knife and grind the paint edge when disassembling parts of the robot! See *Replacing parts on the robot on page 138*	
5	Remove the left hand side wrist cover.	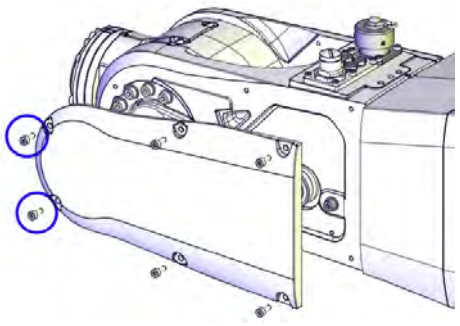 xx1400000033

Continues on next page

© Copyright 2014 - 2017 ABB. All rights reserved.

4.6.8 Replacing the axis-5 timing belt

Continued

Removing the axis-5 timing belt

	Action	Note
1	**DANGER** Make sure that all supplies for electrical power, hydraulic pressure, and air pressure are turned off.	
2	Loosen the screws so that the motor can be moved sideways.	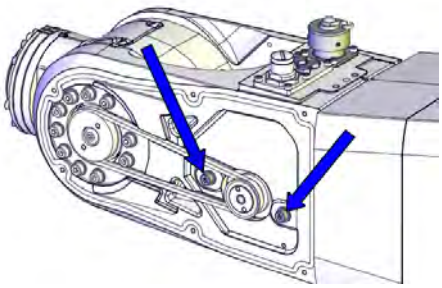 xx1300002350
3	**CAUTION** For robots with protection type Clean Room: Always cut the paint with a knife and grind the paint edge when disassembling parts of the robot! See *Replacing parts on the robot on page 138*	
4	Remove the timing belt.	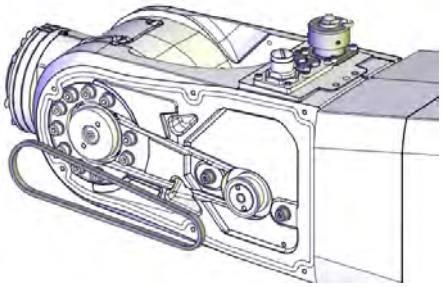 xx1300002351

Refitting the timing belt

Use these procedures to refit the axis-5 timing belt.

Refitting the axis-5 timing belt

	Action	Note
1	Clean Room robots: clean the joints that have been opened. See *Replacing parts on the robot on page 138*	

Continues on next page

© Copyright 2014 - 2017 ABB. All rights reserved.

	Action	Note
2	Refit the timing belt on the pulley.	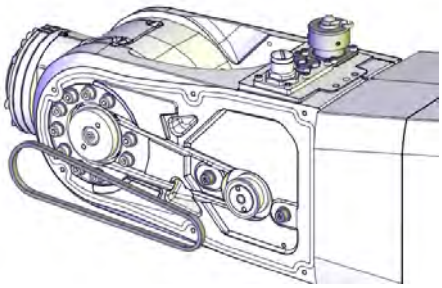 xx1300002351
3	Move the motor to achieve correct belt tension (F = 26 N).	Belt tension: F = 26 N.
4	Secure the motor with its attachment screws.	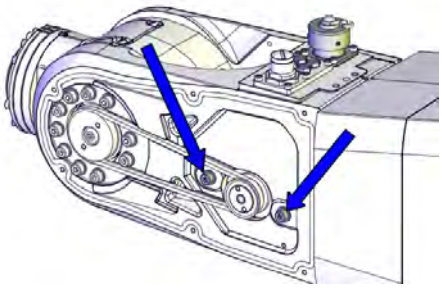 xx1300002350 Tightening torque: 3.5 Nm.
5	Clean Room robots: seal and paint the joints that have been opened. See *Replacing parts on the robot on page 138* **Note** After all repair work, wipe the robot free from particles with spirit on a lint free cloth.	

Concluding procedure

	Action	Note
1	**For robots with protection class IP67 (option 287-10)** **For robots with protection type Foundry Plus (option 287-3)** **For robots with with protection type Clean Room** **For robots with food grade lubrication** Check the gasket of the wrist cover. Replace if damaged.	Gasket for tubular cover: 3HAC058822-001 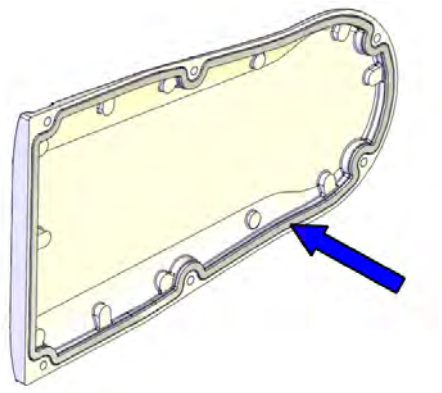 xx1400000034

Continues on next page

© Copyright 2014 - 2017 ABB. All rights reserved.

4.6.8 Replacing the axis-5 timing belt

Continued

	Action	Note
2	Refit the cover to the wrist. **For robots with protection class IP67 (option 287-10)** **For robots with protection type Foundry Plus (option 287-3)** Apply locking liquid Loctite 243 to the two front screws on the left hand side cover, encircled in the figure.	Screws: 3HAB3409-207 (M3x8). Tightening torque: 1.5 Nm. 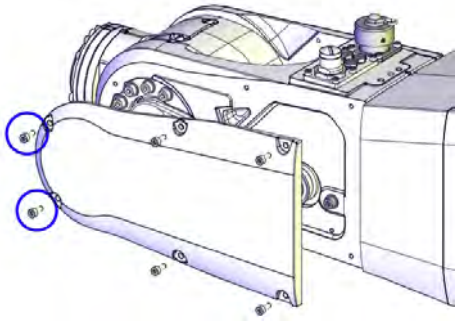 xx1400000033 **Note** Only use specified screws, never replace them with other screws.
3	For robots with protection type Clean Room: Clean and paint the joints that have been opened. See *Replacing parts on the robot on page 138* **Note** After all repair work, wipe the Clean Room robot free from particles with spirit on a lint free cloth.	
4	Recalibrate the robot.	Calibration information is included in section *Calibration on page 733*.
5	**DANGER** Make sure all safety requirements are met when performing the first test run. These are further detailed in the section *DANGER - First test run may cause injury or damage! on page 48*.	

© Copyright 2014 - 2017 ABB. All rights reserved.

4.6.9 Replacing the axis-5 and axis-6 drive unit

Location of the drive unit

The drive unit of axis-5 and axis-6 is located as shown in the figure.

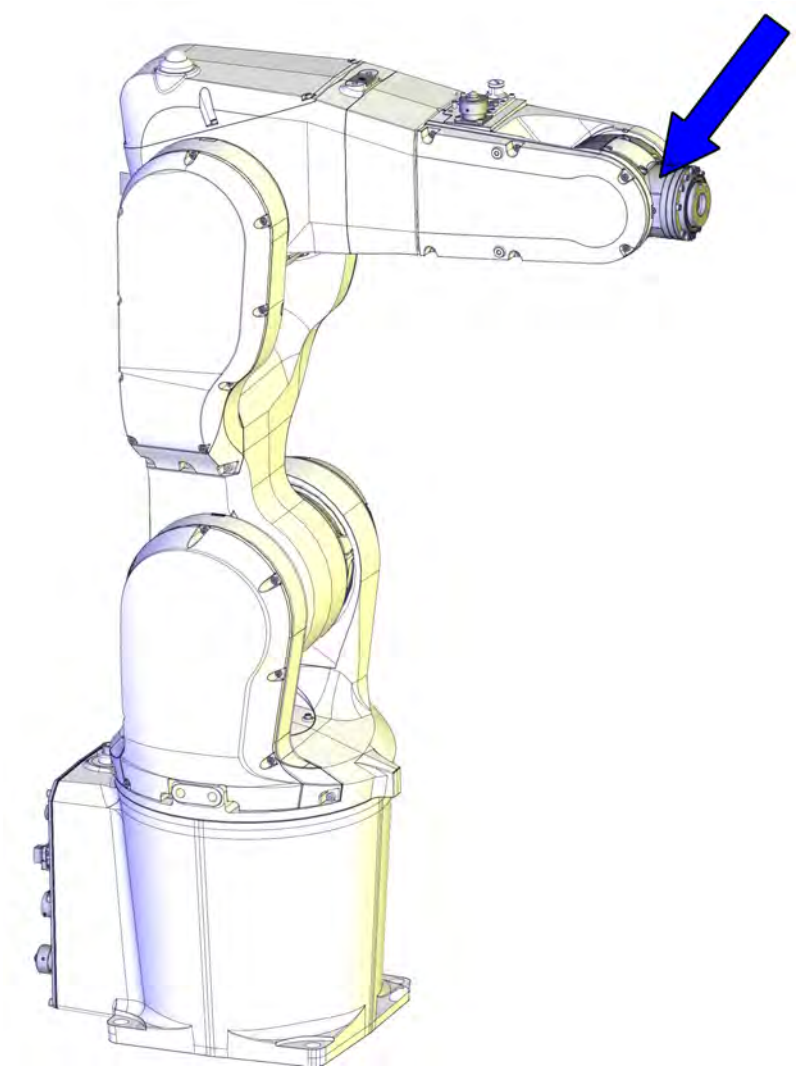

xx1300002467

Required spare parts

Note

The spare part numbers that are listed in the table can be out of date. See the latest revision of *Product manual, spare parts - IRB 1200* on ABB Library.

Spare part	Art. no.	Note
Drive unit	3HAC059696-001	Includes axis-5 gear unit and axis-6 drive train unit.

Continues on next page

© Copyright 2014 - 2017 ABB. All rights reserved.

4.6.9 Replacing the axis-5 and axis-6 drive unit
Continued

Spare part	Art. no.	Note
Drive unit, Cean Room	3HAC059707-001	Used with protection type Clean Room. Includes axis-5 gear unit and axis-6 drive train unit.
Drive unit, food grade lubrication	3HAC057907-001	Used for robots with food grade lubrication. Includes axis-5 gear unit and axis-6 drive train unit.
Drive unit, SafeMove 2-supported	3HAC061279-001	Used for IRB 1200 Type B. See *Type B of IRB 1200 on page 792*. Includes axis-5 gear unit and axis-6 drive train unit.
Drive unit, Clean Room and SafeMove 2-supported	3HAC061280-001	Used for IRB 1200 Type B. See *Type B of IRB 1200 on page 792*. Used with protection type Clean Room. Includes axis-5 gear unit and axis-6 drive train unit.
Drive unit, food grade lubrication	3HAC061281-001	Used for IRB 1200 Type B. See *Type B of IRB 1200 on page 792*. Used for robots with food grade lubrication. Includes axis-5 gear unit and axis-6 drive train unit.
M2 variseal sealing	3HAC044641-008	Used with protection class IP67. Used with protection type Foundry Plus. Replace if damaged.
M2 variseal sealing	3HAC044641-009	Replace if damaged.
Radial sealing	3HAB3701-42	Not used with protection class IP40. Replace if damaged.
Sleeve	3HAC044661-001	Replace if damaged.
Gasket for tubular cover	3HAC058822-001	Not used with protection class IP40. Replace if damaged.
Gasket for tubular cable housing cover	3HAC056707-001	Not used with protection class IP40. Replace if damaged.
Protection cover for axis-6 turning disk	3HAC044666-001	Used with protection type Foundry Plus. Replace if damaged.
T40 variseal sealing	3HAC044641-012	Used with protection type Foundry Plus. Replace if damaged.

Continues on next page

© Copyright 2014 - 2017 ABB. All rights reserved.

Required tools and equipment

Equipment, etc.	Article number	Note
Guide pin for tilt unit (axis 5)	3HAC049706-001	Always use three guide pins together!
Axis-5 sealing assembly tool set	3HAC049701-001	Used to refit the radial sealing, if replacement is needed.
Calibration toolkit, manual calibration	3HAC051256-001	Includes calibration tools, pins and attachment screws for manual calibration method. [i]
24 VDC power supply	-	Used to release the motor brakes.
Standard toolkit	-	Content is defined in section *Standard toolkit on page 808*.

[i] The robot is calibrated by either manual calibration or Axis Calibration at factory. Always use the same calibration method as used at the factory.
Information about valid calibration method is found on the calibration label or in the calibration menu on the FlexPendant.
If no data is found related to standard calibration, manual calibration is used as default.

Required consumables

Consumable	Art. no.	Note
Cleaning agent	-	Loctite 7063
Locking liquid	3HAB7116-1	Loctite 243
Flange sealing	12340011-116	Loctite 574

Deciding calibration routine

Decide which calibration routine to be used, based on the information in the table. Depending on which routine is chosen, action might be required prior to beginning the repair work of the robot, see the table.

	Action	Note
1	Decide which calibration routine to use for calibrating the robot. • Reference calibration. External cable packages (DressPack) and tools can stay fitted on the robot. • Fine calibration. All external cable packages (DressPack) and tools must be removed from the robot.	**Note** Calibrating axis 6 always requires tools to be removed from the mounting flange (also for reference calibration) since the mounting flange is used for installation of the calibration tool.
	If the robot is to be calibrated with reference calibration: Find previous reference values for the axis or create new reference values. These values are to be used after the repair procedure is completed, for calibration of the robot. If no previous reference values exist, and no new reference values can be created, then reference calibration is not possible.	Follow the instructions given in the reference calibration routine on the FlexPendant to create reference values. Creating new values requires possibility to move the robot. Read more about reference calibration for Axis Calibration in *Reference calibration routine on page 743*.
	If the robot is to be calibrated with fine calibration: Remove all external cable packages (DressPack) and tools from the robot.	

Continues on next page

© Copyright 2014 - 2017 ABB. All rights reserved.

4.6.9 Replacing the axis-5 and axis-6 drive unit
Continued

Removing the drive unit

Use these procedures to remove the drive unit.

Preparations before removing the axis-5 and axis-6 drive unit

	Action	Note
1	Decide which calibration routine to use, and take actions accordingly prior to beginning the repair procedure.	
2	Jog all axes to zero position.	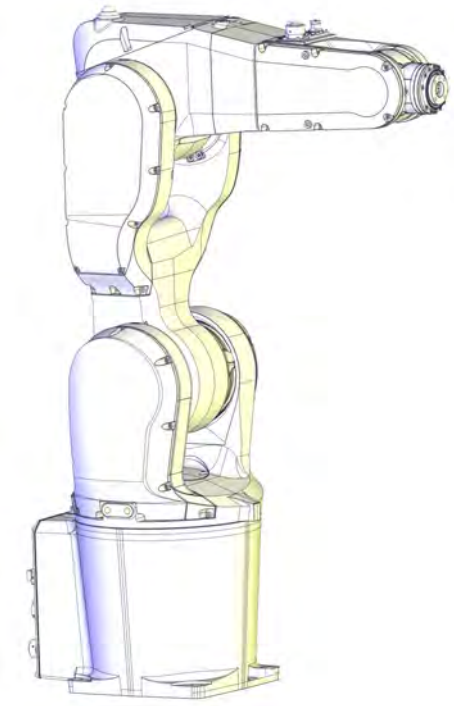 xx1300002581
3	**DANGER** Turn off all: • electric power supply • hydraulic pressure supply • air pressure supply to the robot, before entering the robot working area.	

Getting access to inside of the wrist unit

	Action	Note
1	**DANGER** Make sure that all supplies for electrical power, hydraulic pressure, and air pressure are turned off.	

Continues on next page

© Copyright 2014 - 2017 ABB. All rights reserved.

	Action	Note
2	**CAUTION** For robots with protection type Clean Room: Always cut the paint with a knife and grind the paint edge when disassembling parts of the robot! See *Replacing parts on the robot on page 138*	
3	Remove the covers on each side of the wrist by removing their screws. **Note** **For robots with protection class IP67 (option 287-10)** **For robots with protection type Foundry Plus (option 287-3)** The two front screws on the left hand side cover (encircled in the figure) have been fitted with locking liquid. The tubular cover (left hand side cover) has two extra screws and washers, as encircled in the figure. **Note** **For robots with protection type Clean Room** The tubular cover (left hand side cover) has two extra screws and washers, as encircled in the figure.	For robots with protection class IP67 (option 287-10) For robots with protection type Foundry Plus (option 287-3) 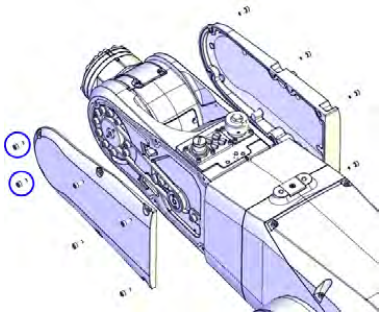 xx1300002349 For robots with protection type Clean Room 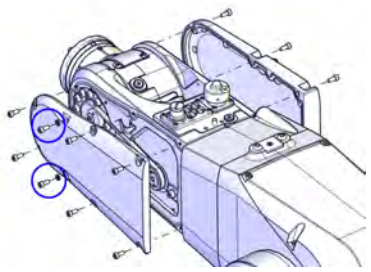 xx1600001148

Removing the tubular cable housing

	Action	Note
1	**CAUTION** For robots with protection type Clean Room: Always cut the paint with a knife and grind the paint edge when disassembling parts of the robot! See *Replacing parts on the robot on page 138*	

Continues on next page

© Copyright 2014 - 2017 ABB. All rights reserved.

4.6.9 Replacing the axis-5 and axis-6 drive unit

Continued

	Action	Note
2	Snap loose and disconnect the axis-5 FPC connectors.	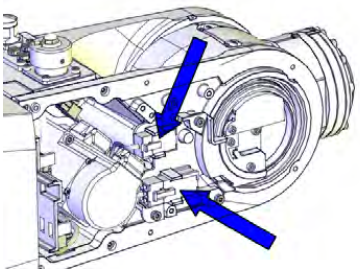 xx1300002390
3	Remove the connector plate by first removing the screws.	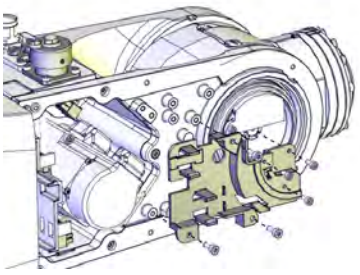 xx1300002391
4	Remove the cable housing of the tubular by first removing the screws. **Note** **For robots with protection class IP67 (option 287-10)** **For robots with protection type Foundry Plus (option 287-3)** The frame is glued and needs to be pried off.	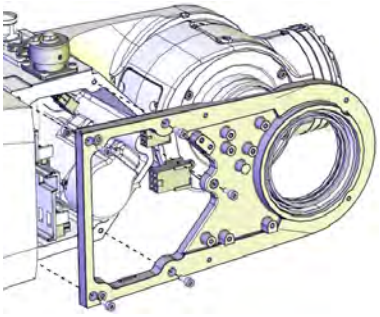 xx1300002392

Removing the axis-5 FPC unit

	Action	Note
1	For robots with protection type Clean Room: Always cut the paint with a knife and grind the paint edge when disassembling parts of the robot! See *Replacing parts on the robot on page 138*	
2	Remove the sleeve screws.	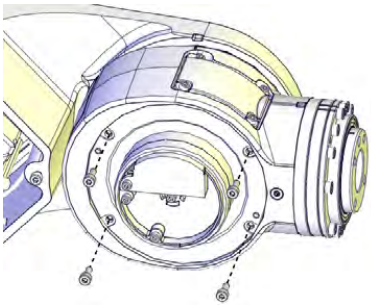 xx1300002393

Continues on next page

© Copyright 2014 - 2017 ABB. All rights reserved.

	Action	Note
3	Remove the sleeve by screwing in two of the screws into the press out holes to force the sleeve out.	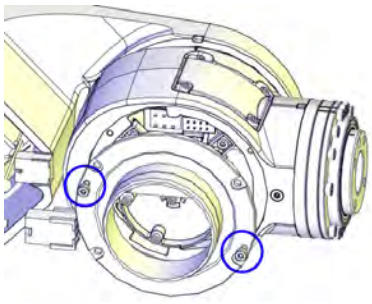 xx1300002582
4	Remove the FPC unit attachment screws and pull out the FPC unit as far as required for the axis-6 motor connectors to be accessed.	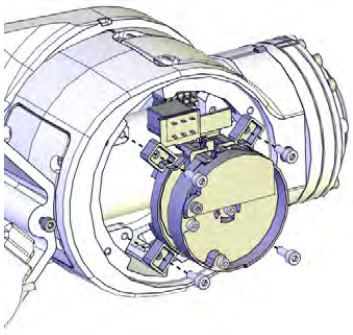 xx1300002394
5	Disconnect the axis-6 motor connectors and remove the FPC unit completely.	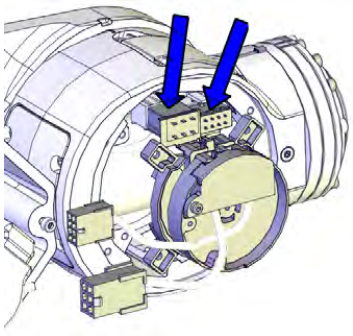 xx1300002395

Removing the drive unit

	Action	Note
1	**DANGER** Make sure that all supplies for electrical power, hydraulic pressure, and air pressure are turned off.	
2	For robots with protection type Clean Room: Always cut the paint with a knife and grind the paint edge when disassembling parts of the robot! See *Replacing parts on the robot on page 138*	

Continues on next page

© Copyright 2014 - 2017 ABB. All rights reserved.

4.6.9 Replacing the axis-5 and axis-6 drive unit

Continued

	Action	Note
3	Loosen the attachment screws of the axis-5 motor so that the motor can slide sideways.	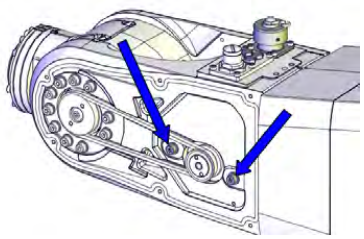 xx1300002350
4	Slide the motor sideways to release the tension of the timing belt, and remove the timing belt.	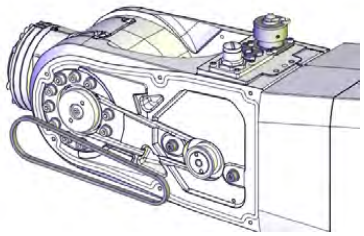 xx1300002351
5	Support the weight of the drive unit and remove the screws.	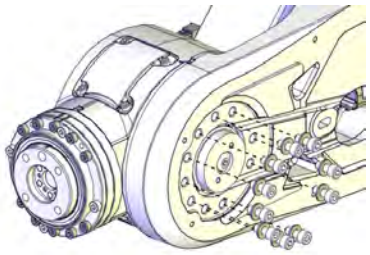 xx1300002469
6	Fit guide pins to the gearbox.	Guide pin for tilt unit (axis 5): 3HAC049706-001 Always use three guide pins together! 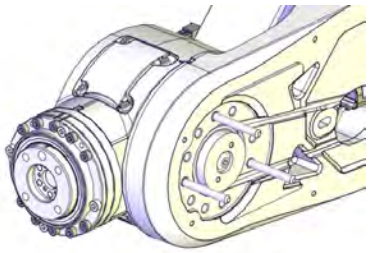 xx1400000775
7	Remove the drive unit.	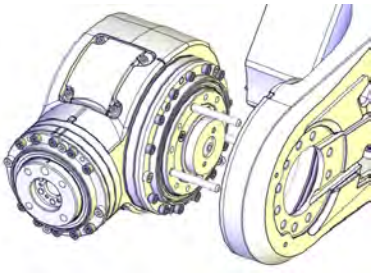 xx1300002470

Continues on next page

© Copyright 2014 - 2017 ABB. All rights reserved.

Refitting the drive unit

Use these procedures to refit the drive unit.

Refitting the axis-5 and axis-6 drive unit

	Action	Note
1	Clean Room robots: clean the joints that have been opened. See *Replacing parts on the robot on page 138*	
2	**For robots with protection type Foundry Plus (option 287-3)** Check the protection cover for turning disk and T40 variseal sealing. Replace if damaged.	Protection cover for axis-6 turning disk: 3HAC044666-001 T40 variseal sealing: 3HAC044641-012 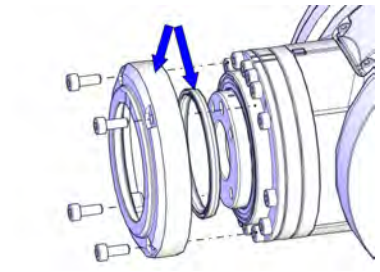 xx1600001126
3	**For robots with protection class IP67 (option 287-10)** **For robots with protection type Foundry Plus (option 287-3)** Check the sealing. Replace if damaged. **CAUTION** Do not fit M2 variseal sealing on Clean Room robots.	M2 variseal sealing: 3HAC044641-008 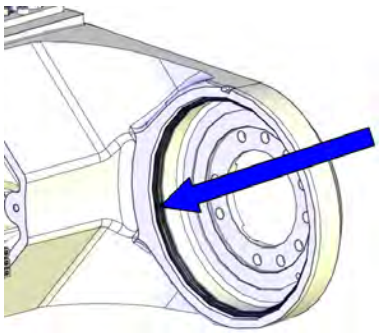 xx1300002493
4	Remove residual locking liquid and other pollutants with cleaning agent Loctite 7063. Apply flange sealing Loctite 574 on the mounting surfaces of the drive unit. **Note** For Clean Room robots, wipe clean the overflowing Loctite 574 if there is any.	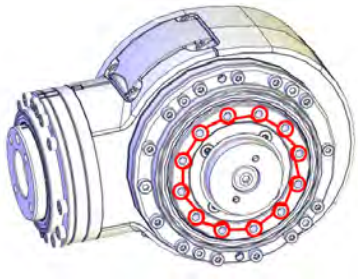 xx1400001404

Continues on next page

© Copyright 2014 - 2017 ABB. All rights reserved.

4.6.9 Replacing the axis-5 and axis-6 drive unit

Continued

	Action	Note
5	Fit guide pins to the axis-5 gearbox.	Guide pin for tilt unit (axis 5): 3HAC049706-001 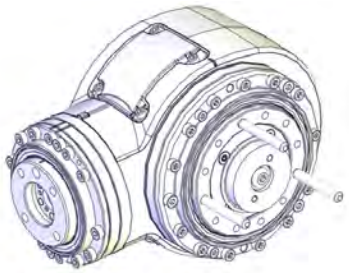 xx1300002568
6	**For robots with protection type Clean Room** Make sure the sealing to the tilt covers is intact before the refitting.	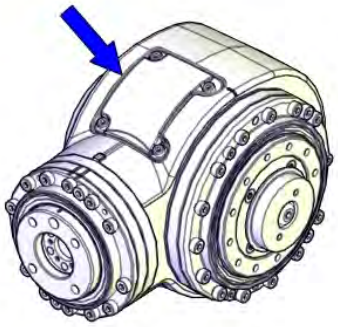 xx1600000219 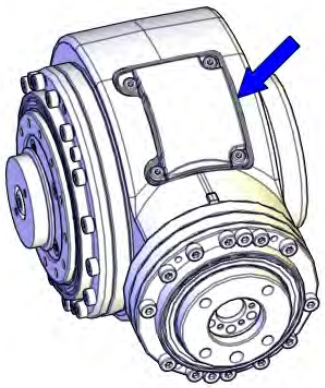 xx1600000220

Continues on next page

© Copyright 2014 - 2017 ABB. All rights reserved.

	Action	Note
7	Refit the drive unit and secure with the screws and washers. Secure the screws but do not tighten yet. **Note** If there is glue on the screw, please clean it or replace it with a new one.	Attachment screws: 3HAB3409-236 (M4x10). 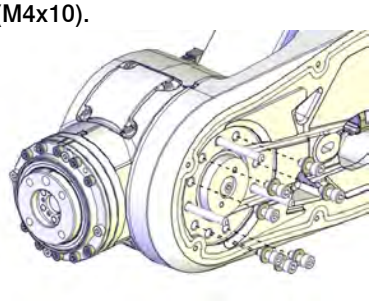 xx1300002569 **Note** Only use specified screws, never replace them with other screws.
8	Remove the guide pins and refit the remaining screws and washers.	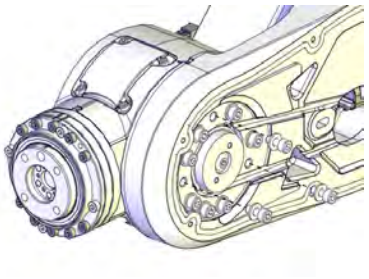 xx1300002570
9	Tighten the screws.	Tightening torque: 4.5 Nm.
10	Clean Room robots: seal and paint the joints that have been opened. See *Replacing parts on the robot on page 138* **Note** After all repair work, wipe the robot free from particles with spirit on a lint free cloth.	

Refitting the axis-5 FPC unit

	Action	Note
1	**WARNING** It is important that axis 5 is in zero position when fitting the FPC unit. Make sure that the FPC is in zero position and does not get twisted during refitting.	
2	Clean Room robots: clean the joints that have been opened. See *Replacing parts on the robot on page 138*	

Continues on next page

© Copyright 2014 - 2017 ABB. All rights reserved.

4.6.9 Replacing the axis-5 and axis-6 drive unit

Continued

	Action	Note
3	Reconnect the axis-6 motor connectors to the FPC unit.	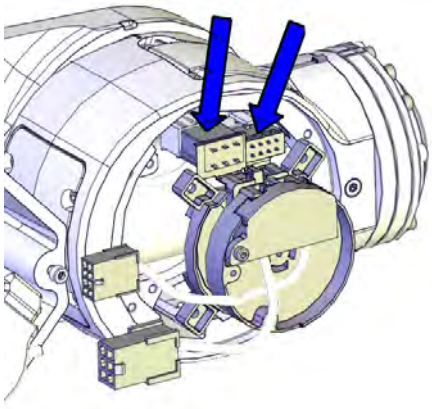 xx1300002395
4	Carefully refit the FPC unit and secure with screws. **Note** Check that the FPC unit is at the zero position when refitting it.	Tightening torque: 0.3 Nm. 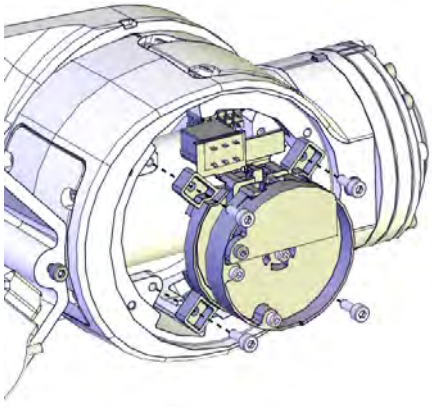 xx1300002394
5	**For robots with protection class IP67 (option 287-10)** **For robots with protection type Foundry Plus (option 287-3)** Remove residual locking liquid and other pollutants with cleaning agent Loctite 7063. Apply flange sealing Loctite 574 on the mounting surfaces of the sleeve. **Note** For Clean Room robots, wipe clean the overflowing Loctite 574 if there is any.	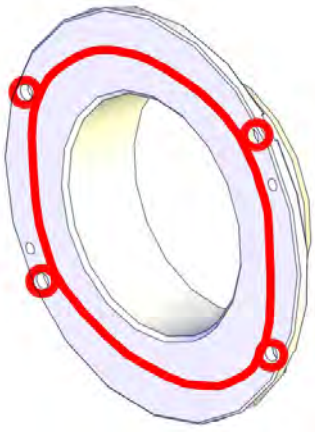 xx1300002609

Continues on next page

© Copyright 2014 - 2017 ABB. All rights reserved.

	Action	Note
6	Refit the sleeve and secure with screws. Replace if damaged.	Sleeve: 3HAC044661-001 Tightening torque: 1.5 Nm. 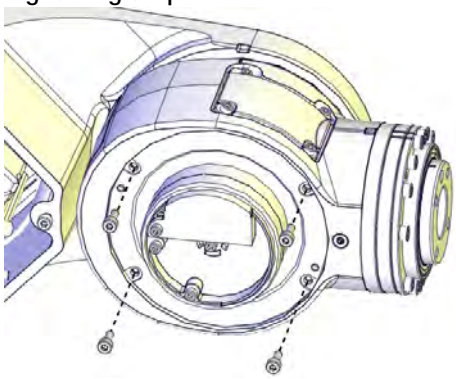 xx1300002393
7	Clean Room robots: seal and paint the joints that have been opened. See *Replacing parts on the robot on page 138* **Note** After all repair work, wipe the robot free from particles with spirit on a lint free cloth.	

Checking the tubular cable housing sealings

	Action	Note
1	Clean Room robots: clean the joints that have been opened. See *Replacing parts on the robot on page 138*	
2	Check the sealing. Replace if damaged. **CAUTION** Do not fit M2 variseal sealing on Clean Room robots.	M2 variseal sealing: 3HAC044641-009 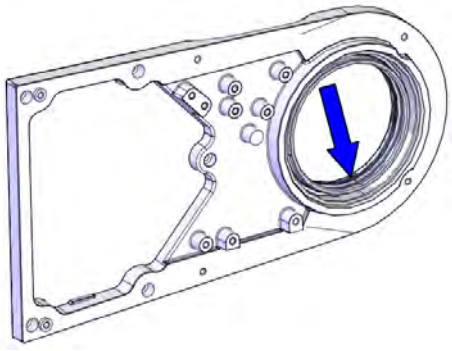 xx1300002396

Continues on next page

© Copyright 2014 - 2017 ABB. All rights reserved.

4.6.9 Replacing the axis-5 and axis-6 drive unit
Continued

	Action	Note
3	**For robots with protection class IP67 (option 287-10)** **For robots with protection type Foundry Plus (option 287-3)** **For robots with with protection type Clean Room** **For robots with food grade lubrication** Check the radial sealing. Replace if damaged, as described below. If undamaged and properly seated, skip to the next procedure table.	Radial sealing: 3HAB3701-42 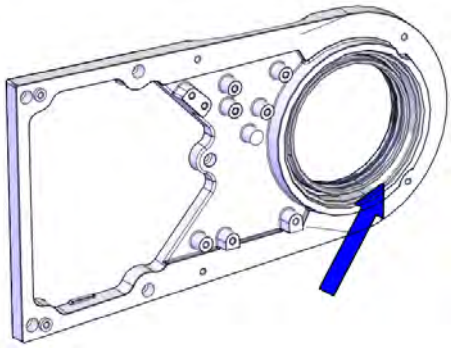 xx1300002608
4	**For robots with protection type Clean Room** Apply a little grease to the sealing when replacing the radial sealing and wipe clean after the replacement.	
5	Fit the radial sealing into the tubular cable housing.	
6	Fit the circular part of the radial sealing assembly tool against the radial sealing.	Axis-5 sealing assembly tool set: 3HAC049701-001
7	Fit the tool plate to the other side of the tubular cable housing with the six screws M6x40.	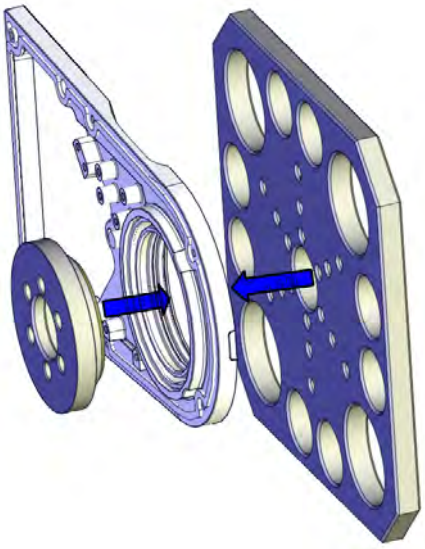 xx1400000485

Continues on next page

© Copyright 2014 - 2017 ABB. All rights reserved.

	Action	Note
8	Screw the screws, little by little, to press the sealing into place.	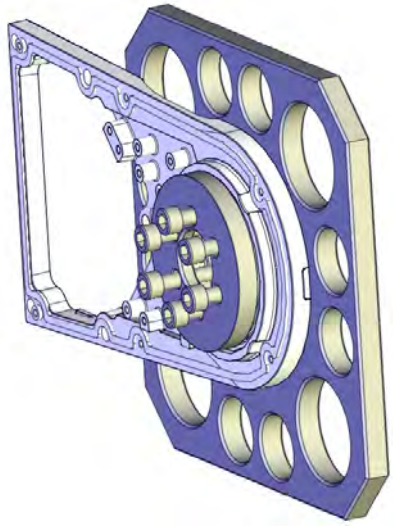 xx1400000486
9	Remove the assembly tool.	
10	Check that the sealing is undamaged and properly fitted.	
11	Clean Room robots: seal and paint the joints that have been opened. See *Replacing parts on the robot on page 138* **Note** After all repair work, wipe the robot free from particles with spirit on a lint free cloth.	

Refitting the tubular cable housing

	Action	Note
1	Clean Room robots: clean the joints that have been opened. See *Replacing parts on the robot on page 138*	
2	**For robots with protection class IP67 (option 287-10)** **For robots with protection type Foundry Plus (option 287-3)** Remove residual locking liquid and other pollutants with cleaning agent Loctite 7063. Apply flange sealing Loctite 574 on the mounting surfaces of the tubular cable housing. **Note** For Clean Room robots, wipe clean the overflowing Loctite 574 if there is any.	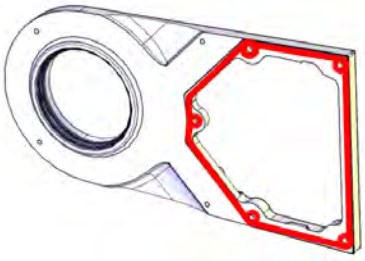 xx1300002610

Continues on next page

© Copyright 2014 - 2017 ABB. All rights reserved.

4.6.9 Replacing the axis-5 and axis-6 drive unit
Continued

	Action	Note
3	Refit the tubular cable housing with the screws.	Tightening torque: 1.5 Nm. Tubular cable housing: 3HAC059695-001 : 3HAC056143-001 (used with protection type Clean Room) Tubular cable housing, Clean Room Tubular cable housing, food grade lubrication 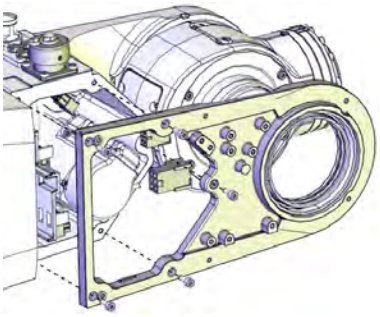 xx1300002392
4	Clean Room robots: seal and paint the joints that have been opened. See *Replacing parts on the robot on page 138* **Note** After all repair work, wipe the robot free from particles with spirit on a lint free cloth.	

Securing the axis-5 motor and timing belt

	Action	Note
1	Clean Room robots: clean the joints that have been opened. See *Replacing parts on the robot on page 138*	
2	Refit the timing belt on the pulley.	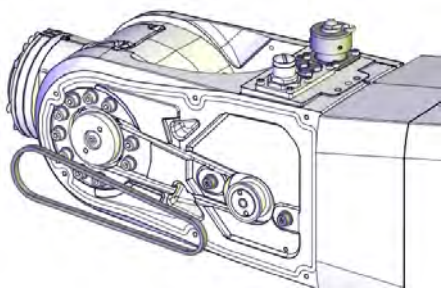 xx1300002351
3	Move the motor to a position where a good timing belt tension is reached (F = 26 N).	**Note** Do not strech the timing belt too much!

Continues on next page

© Copyright 2014 - 2017 ABB. All rights reserved.

	Action	Note
4	Secure the motor with its attachment screws.	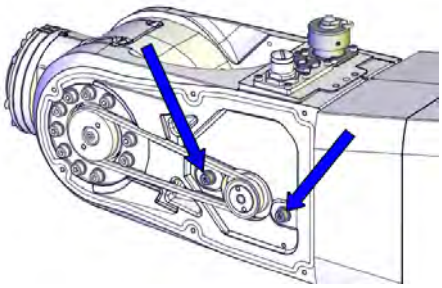 xx1300002350 Tightening torque: 3.5 Nm.
5	Clean Room robots: seal and paint the joints that have been opened. See *Replacing parts on the robot on page 138* **Note** After all repair work, wipe the robot free from particles with spirit on a lint free cloth.	

Refitting the connector plate

	Action	Note
1	Clean Room robots: clean the joints that have been opened. See *Replacing parts on the robot on page 138*	
2	Refit the connector plate and secure with the M3 screws.	Tightening torque: 0.3 Nm. 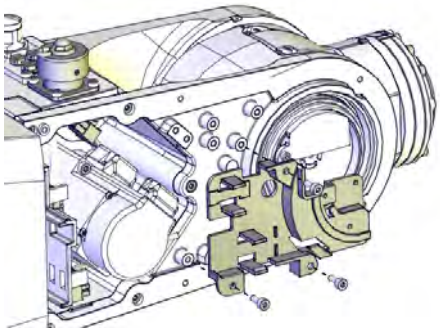 xx1400001401
3	Secure the three M2.5 screws.	Tightening torque: 0.3 Nm. 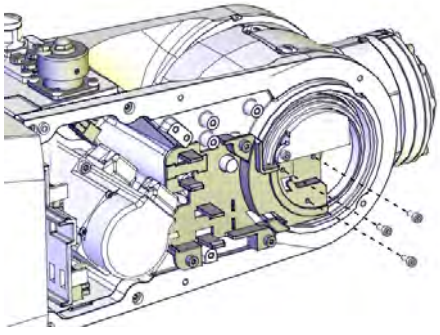 xx1400001402

Continues on next page

© Copyright 2014 - 2017 ABB. All rights reserved.

4.6.9 Replacing the axis-5 and axis-6 drive unit

Continued

	Action	Note
4	Clean Room robots: seal and paint the joints that have been opened. See *Replacing parts on the robot on page 138* **Note** After all repair work, wipe the robot free from particles with spirit on a lint free cloth.	

Connecting the axis-5 motor FPC connectors

	Action	Note
1	Connect the axis-5 FPC connectors and snap them to their holders.	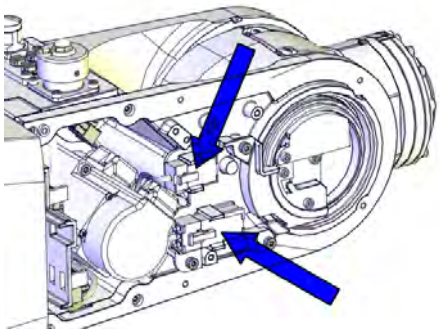 xx1300002390

Refitting the wrist covers

	Action	Note
1	Clean Room robots: clean the joints that have been opened. See *Replacing parts on the robot on page 138*	
2	**For robots with protection class IP67 (option 287-10)** **For robots with protection type Foundry Plus (option 287-3)** **For robots with with protection type Clean Room** **For robots with food grade lubrication** Check the tubular cover gasket. Replace if damaged.	Gasket for tubular cover: 3HAC058822-001 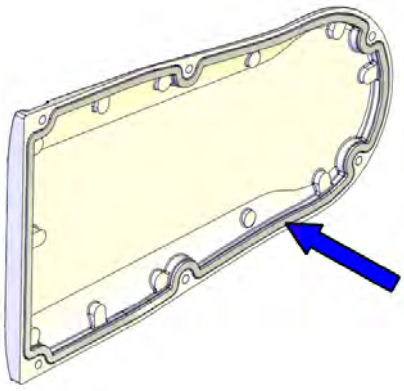 xx1400000034

Continues on next page

© Copyright 2014 - 2017 ABB. All rights reserved.

	Action	Note
3	**For robots with protection class IP67 (option 287-10)** **For robots with protection type Foundry Plus (option 287-3)** **For robots with with protection type Clean Room** **For robots with food grade lubrication** Check the tubular cable housing cover gasket. Replace if damaged.	Gasket for tubular cable housing cover: 3HAC056707-001 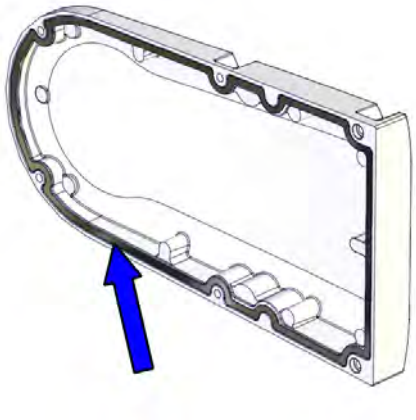 xx1400000345

Continues on next page

© Copyright 2014 - 2017 ABB. All rights reserved.

4.6.9 Replacing the axis-5 and axis-6 drive unit
Continued

	Action	Note
4	Refit the both covers to the wrist. **For robots with protection class IP67 (option 287-10)** **For robots with protection type Foundry Plus (option 287-3)** Apply locking liquid Loctite 243 to the two front screws on the left hand side cover, encircled in the figure. Remember to refit the extra two screws and washers to the tubular cover. **For robots with protection type Clean Room** Remember to refit the extra two screws and washers to the tubular cover.	Screws: 3HAB3409-207 (M3x8). Tightening torque: 1.5 Nm. For robots with protection class IP67 (option 287-10) For robots with protection type Foundry Plus (option 287-3) 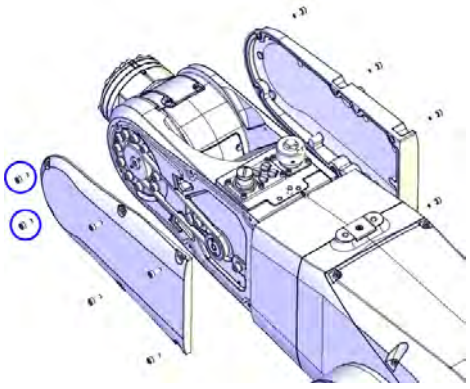 xx1300002349 For robots with protection type Clean Room 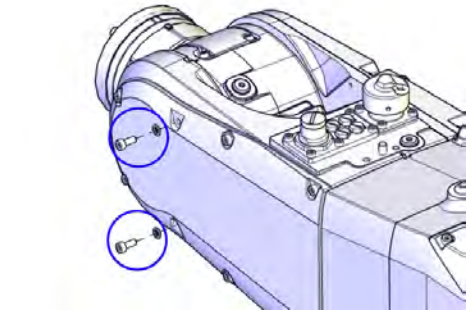 xx1600001153 **Note** Only use specified screws, never replace them with other screws.
5	Clean Room robots: seal and paint the joints that have been opened. See *Replacing parts on the robot on page 138* **Note** After all repair work, wipe the robot free from particles with spirit on a lint free cloth.	

Continues on next page

© Copyright 2014 - 2017 ABB. All rights reserved.

Concluding procedure

	Action	Note
1	For robots with protection type Clean Room: Clean and paint the joints that have been opened. See *Replacing parts on the robot on page 138*  **Note** After all repair work, wipe the Clean Room robot free from particles with spirit on a lint free cloth.	
2	Recalibrate the robot.	Calibration information is included in section *Calibration on page 733*.
3	 **DANGER** Make sure all safety requirements are met when performing the first test run. These are further detailed in the section *DANGER - First test run may cause injury or damage! on page 48*.	

© Copyright 2014 - 2017 ABB. All rights reserved.

This page is intentionally left blank

5 Calibration

5.1 Introduction to calibration

5.1.1 Introduction and calibration terminology

Calibration information

This chapter includes general information about the recommended calibration methods and also the detailed procedures for updating the revolution counters, checking the calibration position etc.

Detailed instructions of how to perform Axis Calibration are given on the FlexPendant during the calibration procedure. To prepare calibration with Axis Calibration method, see *Calibrating with Axis Calibration method on page 742*.

Calibration terminology

Term	Definition
Calibration method	A collective term for several methods that might be available for calibrating the ABB robot. Each method contains calibration routines.
Synchronization position	Known position of the complete robot where the angle of each axis can be checked against visual synchronization marks.
Calibration position	Known position of the complete robot that is used for calibration of the robot.
Standard calibration	A generic term for all calibration methods that aim to move the robot to calibration position.
Fine calibration	A calibration routine that generates a new zero position of the robot.
Reference calibration	A calibration routine that generates a new zero position of the robot. This routine is more flexible compared to fine calibration and is used when tools and process equipment are installed. Requires that a reference is created before being used for recalibrating the robot.
Update revolution counter	A calibration routine to make a rough calibration of each manipulator axis.
Synchronization mark	Visual marks on the robot axes. When marks are aligned, the robot is in synchronization position.

© Copyright 2014 - 2017 ABB. All rights reserved.

5.1.2 Calibration methods

Overview

This section specifies the different types of calibration and the calibration methods that are supplied by ABB.

Types of calibration

Type of calibration	Description	Calibration method
Standard calibration	The calibrated robot is positioned at calibration position. Standard calibration data is found on the SMB (serial measurement board) or EIB in the robot. For robots with RobotWare 5.04 or older, the calibration data is delivered in a file, calib.cfg, supplied with the robot at delivery. The file identifies the correct resolver/motor position corresponding to the robot home position.	Axis Calibration or manual calibration[i]
Absolute accuracy calibration (optional)	Based on standard calibration, and besides positioning the robot at synchronization position, the Absolute accuracy calibration also compensates for: • Mechanical tolerances in the robot structure • Deflection due to load Absolute accuracy calibration focuses on positioning accuracy in the Cartesian coordinate system for the robot. Absolute accuracy calibration data is found on the SMB (serial measurement board) in the robot. For robots with RobotWare 5.05 or older, the absolute accuracy calibration data is delivered in a file, absacc.cfg, supplied with the robot at delivery. The file replaces the calib.cfg file and identifies motor positions as well as absolute accuracy compensation parameters. A robot calibrated with absolute accuracy has a sticker next to the identification plate of the robot. To regain 100% absolute accuracy performance, the robot must be recalibrated for absolute accuracy!  xx0400001197	CalibWare

i The robot is calibrated by either manual calibration or Axis Calibration at factory. Always use the same calibration method as used at the factory.
Information about valid calibration method is found on the calibration label or in the calibration menu on the FlexPendant.
If no data is found related to standard calibration, manual calibration is used as default.

Continues on next page

© Copyright 2014 - 2017 ABB. All rights reserved.

Brief description of calibration methods

Axis Calibration method

Axis Calibration is a standard calibration method for calibration of IRB 1200 and is the most accurate method for the standard calibration. It is the recommended method in order to achieve proper performance.

The following routines are available for the Axis Calibration method:

- Fine calibration
- Update revolution counters
- Reference calibration

The calibration equipment for Axis Calibration is delivered as a toolkit.

An introduction to the calibration method is given in this manual, see *Calibrating with Axis Calibration method on page 742*.

The actual instructions of how to perform the calibration procedure and what to do at each step is given on the FlexPendant. You will be guided through the calibration procedure, step by step.

Manual calibration method

With the manual calibration method, the robot's axes are positioned in specific calibration positions using calibration tools. Under this condition, the position of the axis to be calibrated is pre-determined. The axes must be calibrated one at a time.

CalibWare - Absolute Accuracy calibration

To achieve a good positioning in the Cartesian coordinate system, Absolute Accuracy calibration is used as a TCP calibration. The CalibWare tool guides through the calibration process and calculates new compensation parameters. This is further detailed in the *Application manual - CalibWare Field 5.0*.

If a service operation is done to a robot with the option Absolute Accuracy, a new absolute accuracy calibration is required in order to establish full performance. For most cases after motor and transmission replacements that do not include taking apart the robot structure, standard calibration is sufficient. Standard calibration also supports wrist exchange.

References

Article numbers for the calibration tools are listed in the section *Special tools on page 809*.

© Copyright 2014 - 2017 ABB. All rights reserved.

5.1.3 When to calibrate

When to calibrate

The system must be calibrated if any of the following situations occur.

The resolver values are changed

If resolver values are changed, the robot must be recalibrated using the calibration methods supplied by ABB. Calibrate the robot carefully with standard calibration, according to information in this manual.

If the robot has *absolute accuracy* calibration, it is also recommended, but not always necessary to calibrate for new absolute accuracy.

The resolver values will change when parts affecting the calibration position are replaced on the robot, for example motors or parts of the transmission.

The revolution counter memory is lost

If the revolution counter memory is lost, the counters must be updated. See *Updating revolution counters on page 739*. This will occur when:

- The battery is discharged
- A resolver error occurs
- The signal between a resolver and measurement board is interrupted
- A robot axis is moved with the control system disconnected

The revolution counters must also be updated after the robot and controller are connected at the first installation.

The robot is rebuilt

If the robot is rebuilt, for example, after a crash or when the reach ability of a robot is changed, it needs to be recalibrated for new resolver values.

If the robot has *absolute accuracy* calibration, it needs to be calibrated for new absolute accuracy.

© Copyright 2014 - 2017 ABB. All rights reserved.

5.2 Synchronization marks and axis movement directions

5.2.1 Synchronization marks and synchronization position for axes

Introduction

This section shows the position of the synchronization marks and the synchronization position for each axis.

Synchronization marks, IRB 1200

This illustration shows the positions of the synchronization scales and marks on the robot.

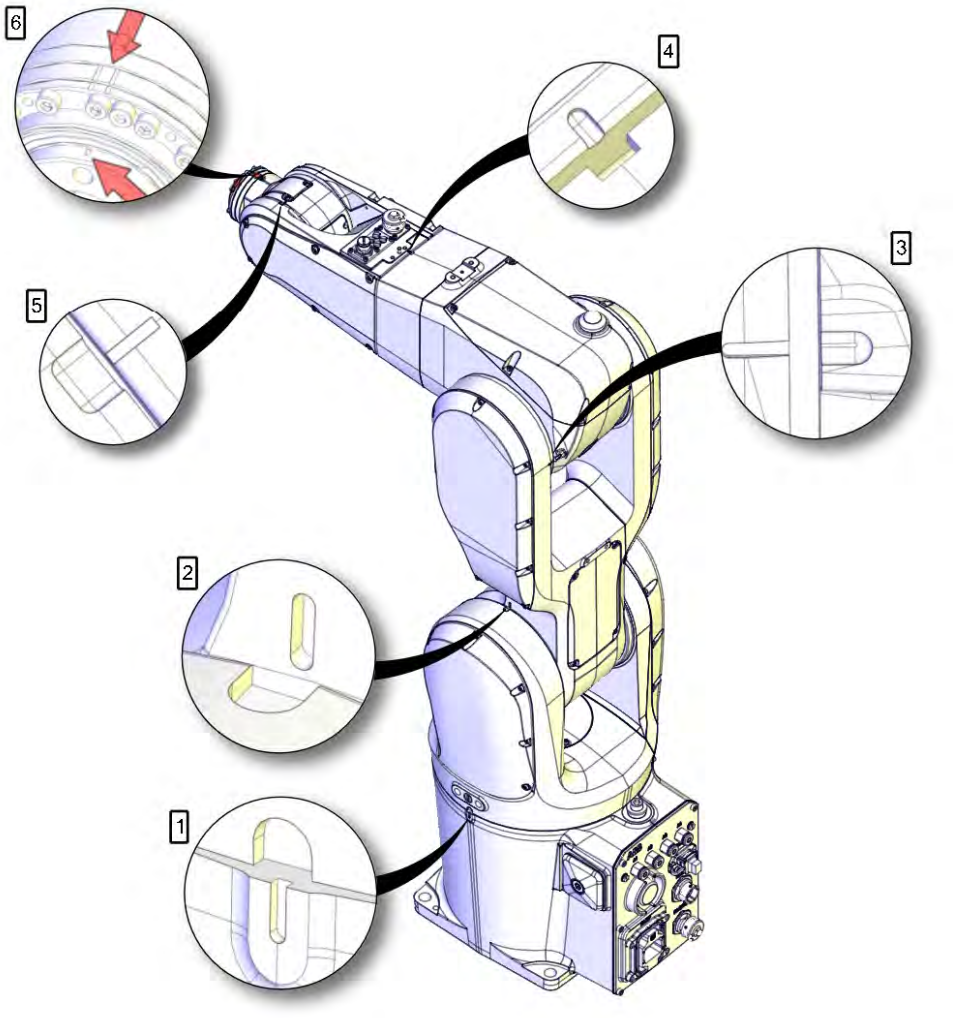

xx1400000402

© Copyright 2014 - 2017 ABB. All rights reserved.

5.2.2 Calibration movement directions for all axes

Overview

When calibrating, the axis must consistently be run towards the calibration position in the same direction in order to avoid position errors caused by backlash in gears and so on. Positive directions are shown in the graphic below.

Calibration service routines will handle the calibration movements automatically and these might be different from the positive directions shown below.

Manual movement directions

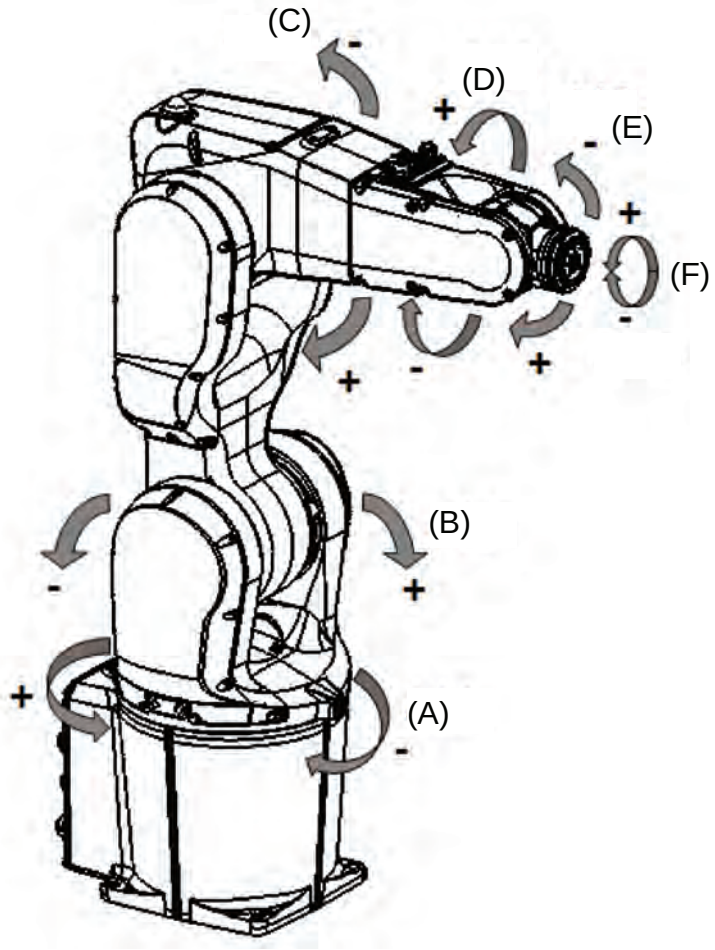

xx1300000365

Position	Description	Position	Description
A	Axis 1	B	Axis 2
C	Axis 3	D	Axis 4
E	Axis 5	F	Axis 6

© Copyright 2014 - 2017 ABB. All rights reserved.

5.3 Updating revolution counters

Introduction

This section describes how to do a rough calibration of each manipulator axis by updating the revolution counter for each axis, using the FlexPendant.

Step 1 - Manually running the manipulator to the synchronization position

Use this procedure to manually run the manipulator to the synchronization position.

	Action	Note
1	Select axis-by-axis motion mode.	
2	Jog the manipulator to align the synchronization marks.	See *Synchronization marks and synchronization position for axes on page 737*.
3	When all axes are positioned, update the revolution counter.	*Step 2 - Updating the revolution counter with the FlexPendant on page 739*.

Step 2 - Updating the revolution counter with the FlexPendant

Use this procedure to update the revolution counter with the FlexPendant (IRC5).

	Action
1	On the **ABB** menu, tap **Calibration**. 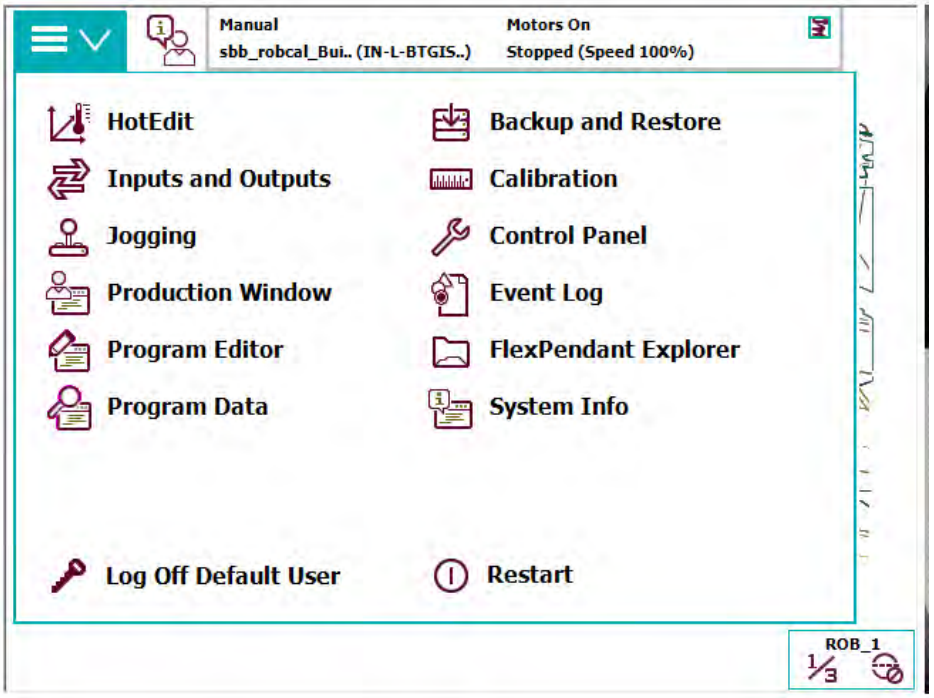 xx1500000942

Continues on next page

© Copyright 2014 - 2017 ABB. All rights reserved.

	Action
2	All mechanical units connected to the system are shown with their calibration status. Tap the mechanical unit in question. 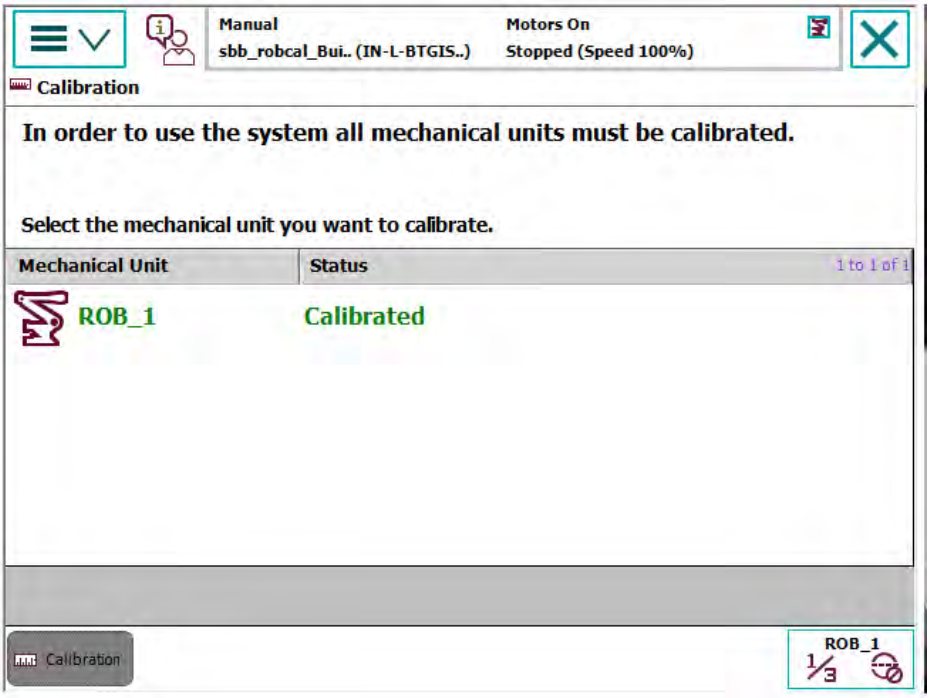 xx1500000943
3	**This step is valid for RobotWare 6.04 and later.** Calibration method used at factory for each axis is shown, as well as calibration method used during last field calibration. Tap **Manual Method (Advanced)**. 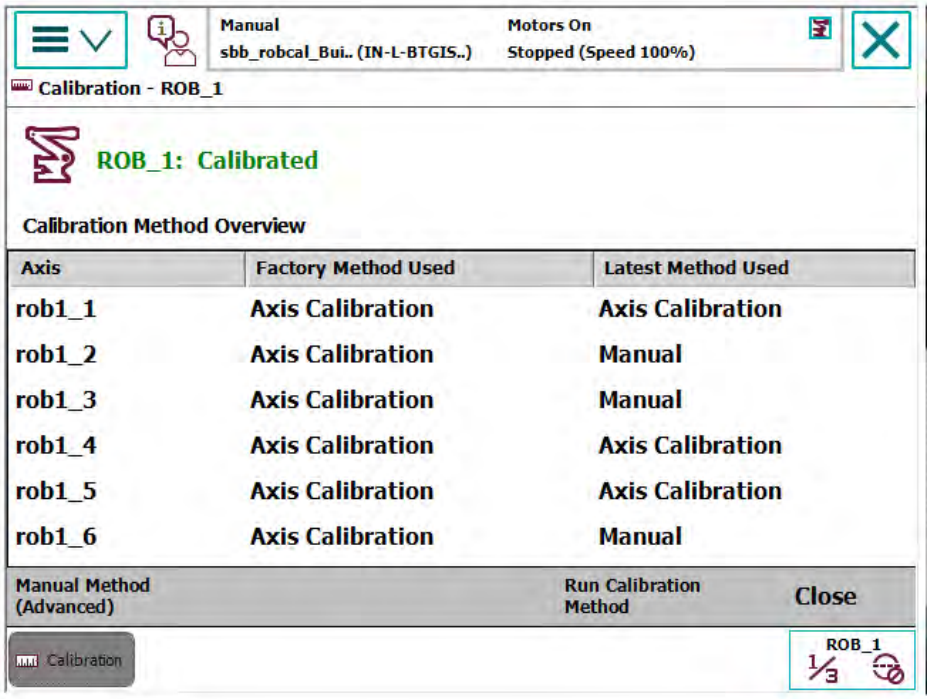 xx1500000944

Continues on next page

© Copyright 2014 - 2017 ABB. All rights reserved.

	Action
4	A screen is displayed, tap **Rev. Counters**. 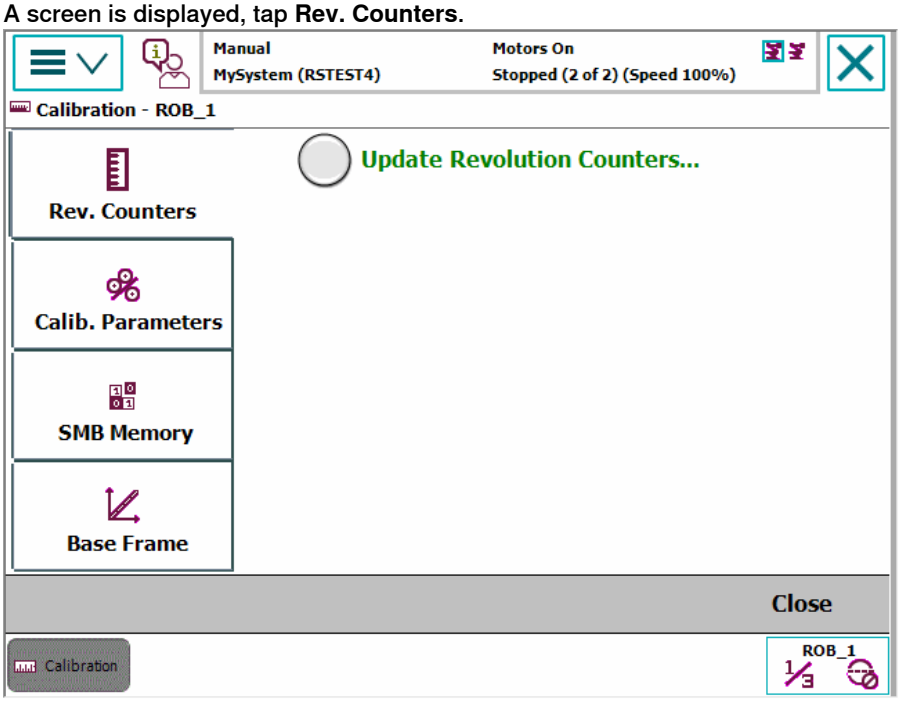 en0400000771
5	Tap **Update Revolution Counters...**. A dialog box is displayed, warning that updating the revolution counters may change programmed robot positions: • Tap **Yes** to update the revolution counters. • Tap **No** to cancel updating the revolution counters. Tapping **Yes** displays the axis selection window.
6	Select the axis to have its revolution counter updated by: • Ticking in the box to the left • Tapping **Select all** to update all axes. Then tap **Update**.
7	A dialog box is displayed, warning that the updating operation cannot be undone: • Tap **Update** to proceed with updating the revolution counters. • Tap **Cancel** to cancel updating the revolution counters. Tapping **Update** updates the selected revolution counters and removes the tick from the list of axes.
8	**CAUTION** If a revolution counter is incorrectly updated, it will cause incorrect manipulator positioning, which in turn may cause damage or injury! Check the synchronization position very carefully after each update. See *Checking the synchronization position on page 786*.

© Copyright 2014 - 2017 ABB. All rights reserved.

5.4 Calibrating with Axis Calibration method

5.4.1 Description of Axis Calibration

Instructions for Axis Calibration procedure given on the FlexPendant

The actual instructions of how to perform the calibration procedure and what to do at each step is given on the FlexPendant. You will be guided through the calibration procedure, step by step.

This manual contains a brief description of the method, additional information to the information given on the FlexPendant, article number for the tools and images of where to fit the calibration tools on the robot.

Overview of the Axis Calibration procedure

The Axis Calibration procedure applies to all axes, and is performed on one axis at the time. The robot axes are both manually and automatically moved into position, as instructed on the FlexPendant.

Bushings are installed on each robot axis at delivery, for installation of the calibration tools. For axis 6 calibration there is one bushing on the wrist and one mounting hole on the tool flange.

The Axis Calibration procedure described roughly:

- A removable calibration tool is inserted by the operator into a calibration bushing on the axis chosen for calibration, according to instructions on the FlexPendant.

WARNING

Calibrating the robot with Axis Calibration requires special calibration tools from ABB. Using other pins in the calibration bushings may cause severe damage to the robot and/or personnel.

WARNING

The calibration tool must be fully inserted into the calibration bushing, until the steel spring ring snaps into place.

- During the calibration procedure, RobotWare moves the robot axis chosen for calibration so that the calibration tools get into contact. RobotWare records values of the axis position and repeats the coming-in-contact procedure several times to get an exact value of the axis position.

WARNING

Risk of pinching! The contact force for large robots can be up to 150 kg. Keep a safe distance to the robot.

Continues on next page

© Copyright 2014 - 2017 ABB. All rights reserved.

- The axis position is stored in RobotWare with an active choice from the operator.

Routines in the calibration procedure

The following routines are available in the Axis Calibration procedure, given at the beginning of the procedure on the FlexPendant.

Fine calibration routine

Choose this routine to calibrate the robot when there are no tools, process cabling or equipment fitted to the robot.

Reference calibration routine

Choose this routine to create reference values and to calibrate the robot when the robot is dressed with tools, process cabling or other equipment.

Also choose this routine if the robot is wall mounted or suspended.

If calibrating the robot with reference calibration there must be reference values created before repair is made to the robot, if values are not already available. Creating new values requires possibility to move the robot. The reference values contain positions of all axes, torque of axes and technical data about the tool installed. The reference value is unique for the current setup of the robot and will be named according to tool name, date etc.

Follow the instructions given in the reference calibration routine on the FlexPendant to create reference values.

When reference calibration is performed, the robot is restored to the status given by the reference values.

Update revolution counters

Choose this routine to make a rough calibration of each manipulator axis by updating the revolution counter for each axis, using the FlexPendant.

Validation

In the mentioned routines, it is also possible to validate the calibration data.

Position of robot axes

The axis chosen for calibration is automatically run by the calibration program to its calibration position during the calibration procedure.

In order for the axis to be able to be moved to calibration position, or in order for getting proper access to the calibration bushing, other axes might need to be jogged to positions different from 0 degrees. Information about which axes are allowed to be jogged will be given on the FlexPendant. These axes are marked with **Unrestricted** in the FlexPendant window.

How to calibrate a suspended or wall mounted robot

The IRB 1200 is calibrated floor standing in factory, prior to shipping.

To calibrate a suspended or wall mounted robot, reference calibration must be used. Reference values for a suspended or a wall mounted robot must be created with the robot mounted at its working position, not standing on a floor.

Continues on next page

© Copyright 2014 - 2017 ABB. All rights reserved.

5.4.1 Description of Axis Calibration
Continued

To calibrate a suspended or wall mounted robot with the fine calibration routine, the robot must first be taken down and mounted standing on the floor.

© Copyright 2014 - 2017 ABB. All rights reserved.

5.4.2 Calibration tools for Axis Calibration

Calibration tool set

The calibration tools used for Axis Calibration are designed to meet requirements for calibration performance, durability and safety in case of accidental damage.

WARNING

Calibrating the robot with Axis Calibration requires special calibration tools from ABB. Using other pins in the calibration bushings may cause severe damage to the robot and/or personnel.

Equipment, etc.	Article number	Note
Calibration tool box, Axis Calibration	3HAC058080-001	Delivered as a set of calibration tools. Required if Axis Calibration is the valid calibration method for the robot. i The tool box also includes a unique calibration pin for IRB 1200 to be fitted to the tool flange during calibration of axis 6.

i The robot is calibrated by either manual calibration or Axis Calibration at factory. Always use the same calibration method as used at the factory.
Information about valid calibration method is found on the calibration label or in the calibration menu on the FlexPendant.
If no data is found related to standard calibration, manual calibration is used as default.

Examining the calibration tool

Check prior to usage

Before using the calibration tool, make sure that the tube insert, the plastic protection and the steel spring ring are present.

WARNING

If any part is missing or damaged, the tool must be replaced immediately.

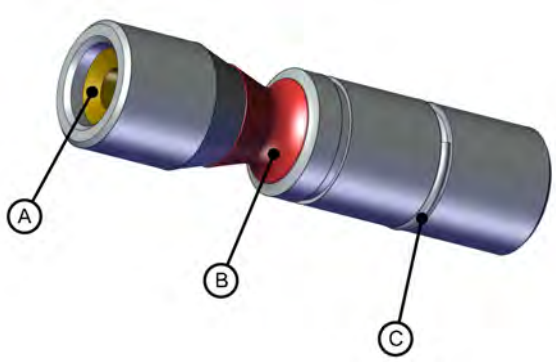

xx1500001914

A	Tube insert
B	Plastic protection
C	Steel spring ring

Continues on next page

© Copyright 2014 - 2017 ABB. All rights reserved.

5.4.2 Calibration tools for Axis Calibration
Continued

Periodic check of the calibration tool

If including the calibration tool in a local periodic check system, the following measures should be checked.

- Outer diameter within Ø12g4 mm, Ø8g4 mm or Ø6g5 mm (depending on calibration tool size).
- Straightness within 0.005 mm.

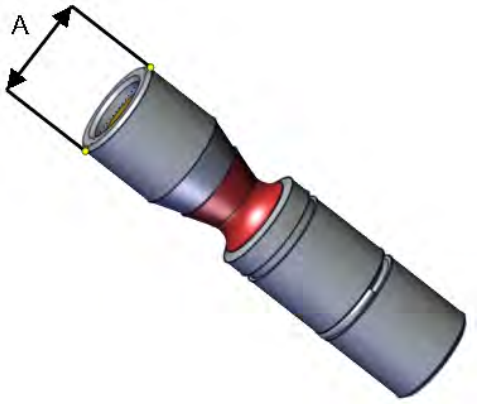

xx1500000951

A	Outer diameter

Periodic check of the calibration tool for the tool flange (3HAC058238-001)

If including the tool flange calibration tool in a local periodic check system, the following measures should be checked.

- Outer diameter within Ø5g5 mm.
- Straightness within 0.005 mm.

.



xx1600001142

A	Outer diameter

© Copyright 2014 - 2017 ABB. All rights reserved.

5.4.3 Installation locations for the calibration tools

Location of fixed calibration items

The figure shows how the robot is equipped with items for installation of calibration tools for Axis Calibration (fixed calibration pins and/or bushings). The figure does not show installed calibration tools.

A fixed calibration pin and a bushing for the movable calibration tool are located on each axis as follows.

If there is not enough space on an axis to install a fixed calibration pin, the axis is equipped with two bushings instead, for installation of two calibration tools when calibration is carried out. This is shown in the figure.

For axis 6 there is only one bushing, the second calibration tool is installed at the mounting flange of the turning disk.

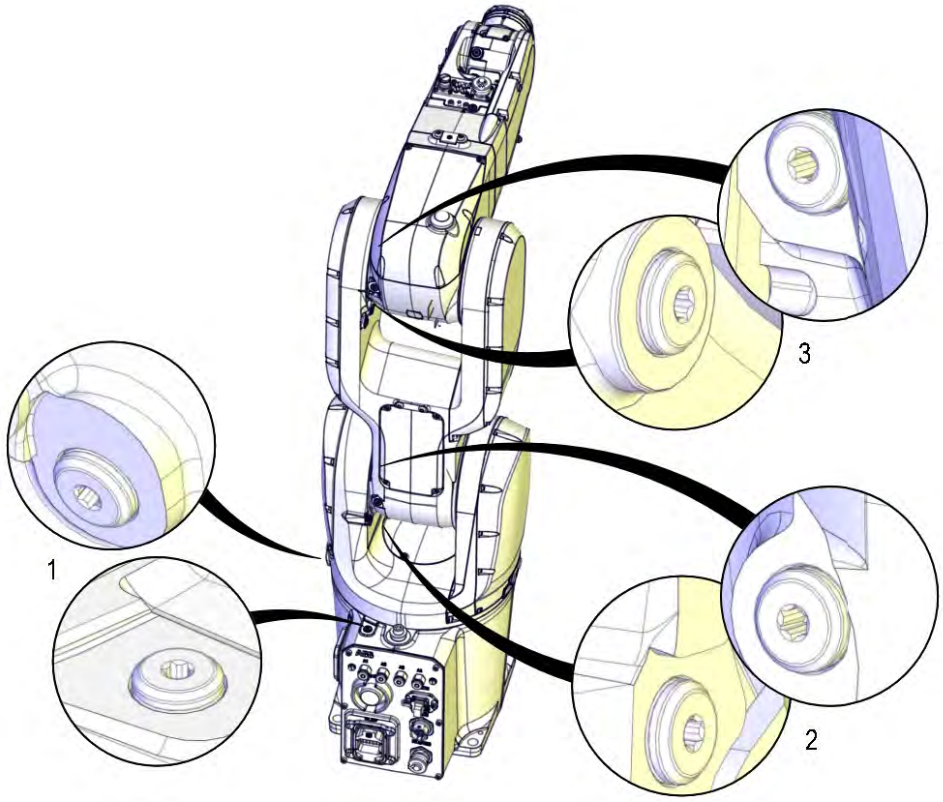

xx1600001035

Continues on next page

© Copyright 2014 - 2017 ABB. All rights reserved.

5.4.3 Installation locations for the calibration tools
Continued

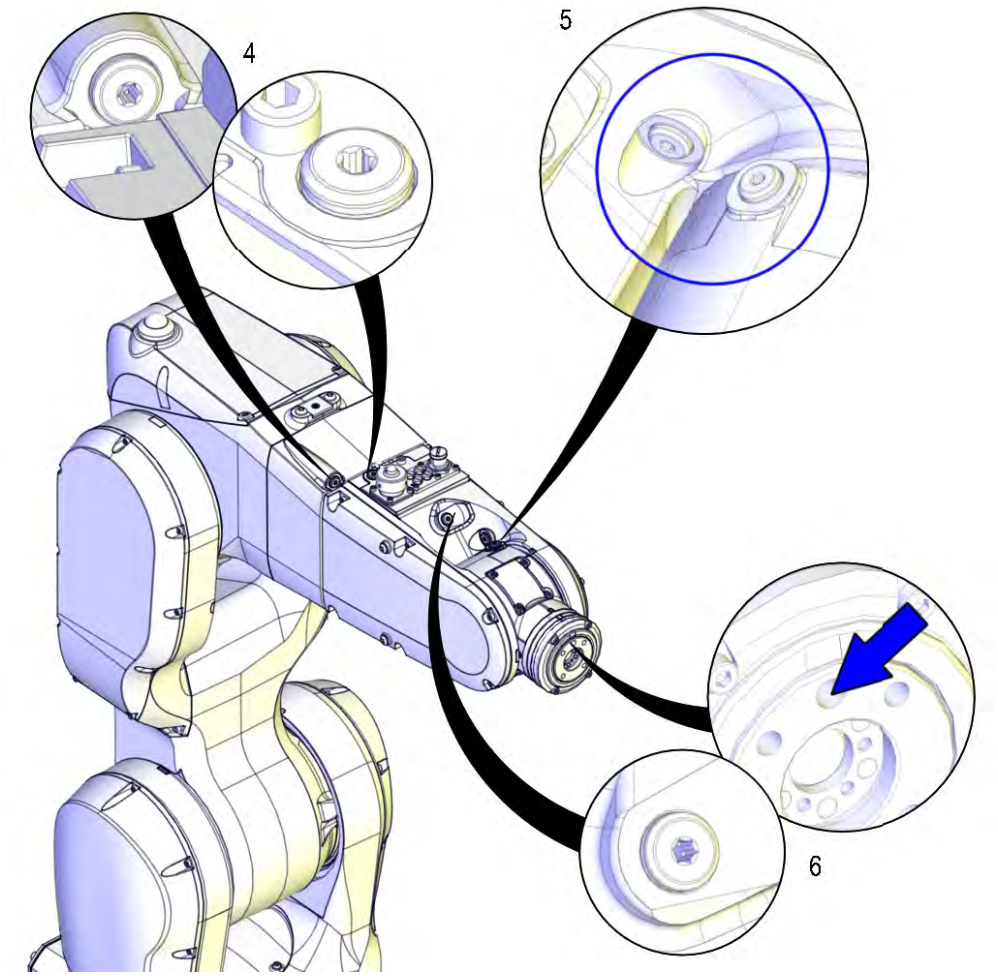

xx1600001036

Spare parts

When calibration is not being performed, a protective plug should always be installed in the bushing. Replace damaged parts with new, if needed.

Spare part	Article number	Note
Protective plug for bushing	3HAC059556-001	Replace if damaged or missing.
Protective plug for bushing, Clean Room Protective plug for bushing, food grade lubrication	3HAC059557-001	Replace if damaged or missing.

© Copyright 2014 - 2017 ABB. All rights reserved.

5.4.4 Axis Calibration - Running the calibration procedure

Required tools

The calibration tools used for Axis Calibration are designed to meet requirements for calibration performance, durability and safety in case of accidental damage.

WARNING

Calibrating the robot with Axis Calibration requires special calibration tools from ABB. Using other pins in the calibration holes may cause severe damage to the robot and/or personnel.

Equipment, etc.	Article number	Note
Calibration tool box, Axis Calibration	3HAC058080-001	Delivered as a set of calibration tools. Required if Axis Calibration is the valid calibration method for the robot. [i] The tool box also includes a unique calibration pin for IRB 1200 to be fitted to the tool flange during calibration of axis 6.

[i] The robot is calibrated by either manual calibration or Axis Calibration at factory. Always use the same calibration method as used at the factory.
Information about valid calibration method is found on the calibration label or in the calibration menu on the FlexPendant.
If no data is found related to standard calibration, manual calibration is used as default.

Required consumables

Consumable	Article number	Note
Clean cloth	-	

Spare parts

Spare part	Article number	Note
Protective plug for bushing	3HAC059556-001	Replace if damaged or missing.
Protective plug for bushing, Clean Room Protective plug for bushing, food grade lubrication	3HAC059557-001	Replace if damaged or missing.

Overview of the calibration procedure on the FlexPendant

The actual instructions of how to perform the calibration procedure and what to do at each step is given on the FlexPendant. You will be guided through the calibration procedure, step by step.

Use the following list to learn about the calibration procedure before running the RobotWare program on the FlexPendant. It gives you a brief overview of the calibration procedure sequence.

Continues on next page

© Copyright 2014 - 2017 ABB. All rights reserved.

5.4.4 Axis Calibration - Running the calibration procedure
Continued

After the calibration method has been called for on the FlexPendant, the following sequence will be run.

1 Choose calibration routine. The routines are described in *Routines in the calibration procedure on page 743*.
2 Choose which axis/axes to calibrate.
3 The robot moves to synchronization position.
4 Validate the synchronization marks.
5 The robot moves to preparation position.
6 Remove the protection plug from the bushings, and install the calibration tool.
7 The robot performs a measurement sequence by rotating the axis back and forth.
8 Remove the calibration tool and reinstall the protection plugs in the bushings.
9 The robot moves to verify that the calibration tool is removed.
10 Choose whether to save the calibration data or not.

Calibration of the robot is not finished until the calibration data is saved, as last step of the calibration procedure.

Preparation prior to calibration

The calibration procedure is described in the FlexPendant while conducting it.

	Action	Note
1	**DANGER** While conducting the calibration, the robot needs to be connected to power. Make sure that the robots working area is empty, as the robot can make unpredictable movements.	
2	**CAUTION** For robots with protection type Clean Room: Always cut the paint with a knife and grind the paint edge when disassembling parts of the robot! See *Replacing parts on the robot on page 138*	
3	Wipe the calibration tool clean. **Note** The calibration method is exact. Dust, dirt or color flakes will affect the calibration value.	Use a clean cloth.

Continues on next page

© Copyright 2014 - 2017 ABB. All rights reserved.

Starting the calibration procedure

Use this procedure to call for the Axis Calibration method on the FlexPendant.

	Action	Note
1	On the **ABB** menu, tap **Calibration**. 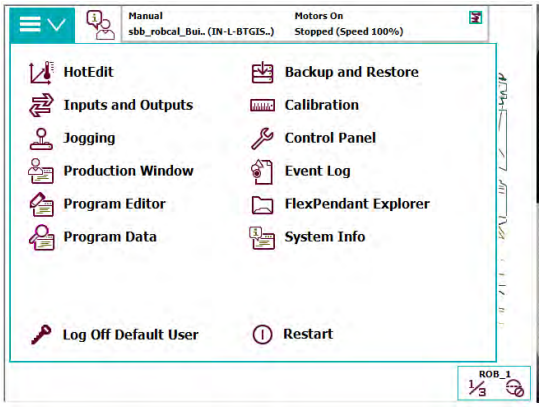 xx1500000942	
2	All mechanical units connected to the system are shown with their calibration status. Tap the mechanical unit in question. 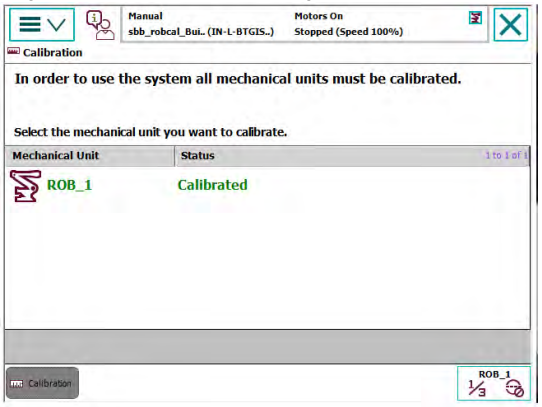 xx1500000943	

Continues on next page

© Copyright 2014 - 2017 ABB. All rights reserved.

5.4.4 Axis Calibration - Running the calibration procedure

Continued

	Action	Note
3	Calibration method used at factory for each axis is shown, as well as calibration method used for the robot during last field calibration. Tap **Run Calibration Method**. The software will automatically call for the procedure for the valid calibration method. 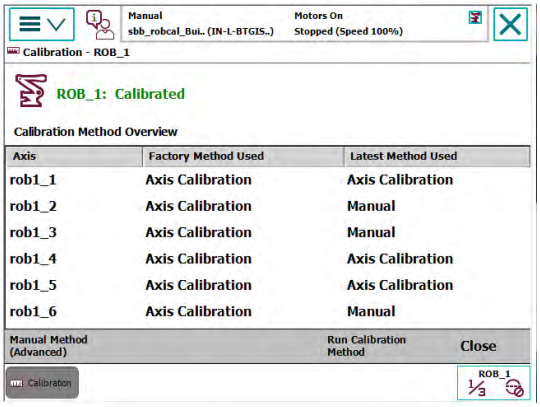 xx1500000944	The FlexPendant will give all information needed to proceed with Axis Calibration.
4	Follow the instructions given on the FlexPendant.	A brief overview of the sequence that will be run on the FlexPendant is given in *Overview of the calibration procedure on the FlexPendant on page 749*.

Fitting of calibration tools

The figures show the calibration tools in contact with each other on each axis.

The position of the complete robot shown for each axis is only an example.

In order for the axis to be able to be moved to calibration position, or in order for getting proper access to the calibration bushing, other axes might need to be jogged to positions different from 0 degrees. Information about which axes are allowed to be jogged will be given on the FlexPendant. These axes are marked with **Unrestricted** in the FlexPendant window.

Calibration tools in contact	
Axis 1	Axis 2
 xx1600001277	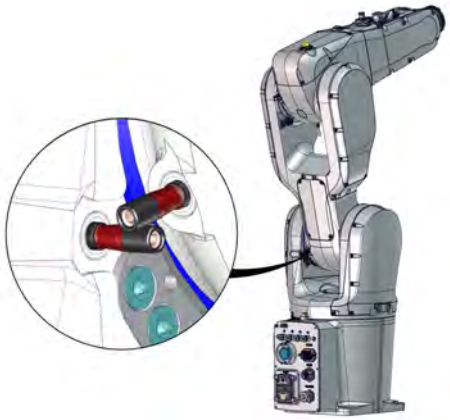 xx1600001276

Continues on next page

© Copyright 2014 - 2017 ABB. All rights reserved.

Calibration tools in contact	
Axis 3 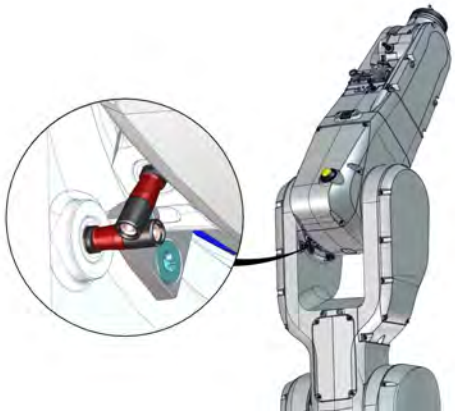 xx1600001275	Axis 4 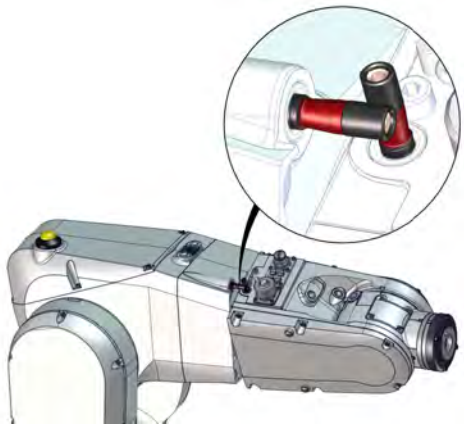 xx1600001274
Axis 5 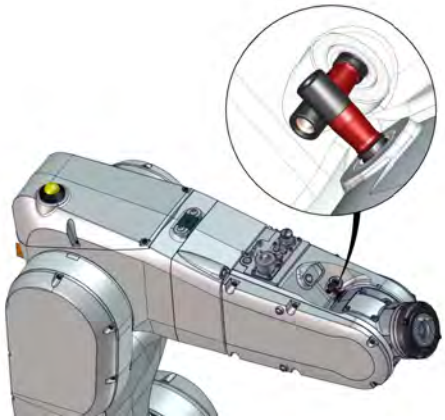 xx1600001273	Axis 6 Make sure to orient the tool flange calibration tool correctly. 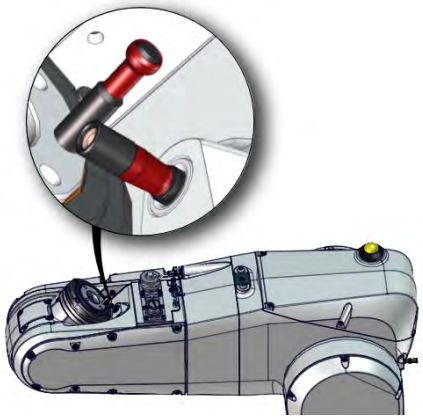 xx1600001272

Restarting an interrupted calibration procedure

If the Axis Calibration procedure is interrupted before the calibration is finished, the RobotWare program needs to be started again. Use this procedure to take required action.

Situation	Action
The three-position enabling device on the FlexPendant has been released during robot movement.	Press and hold the three-position enabling device and press **Play**.

Continues on next page

© Copyright 2014 - 2017 ABB. All rights reserved.

5.4.4 Axis Calibration - Running the calibration procedure
Continued

Situation	Action
The RobotWare program is terminated with **PP to Main**.	Remove the calibration tool, if it is installed, and restart the calibration procedure from the beginning. See *Starting the calibration procedure on page 751*. If the calibration tool is in contact the robot axis needs to be jogged in order to release the calibration tool. Jogging the axis in wrong direction will cause the calibration tool to break. Directions of axis movement is shown in *Calibration movement directions for all axes on page 738*

Axis Calibration with SafeMove option

To be able to run Axis Calibration SafeMove needs to be unsynchronized. The Axis Calibration routine recognizes if the robot is equipped with SafeMove and will force SafeMove to unsynchronize automatically.

However, SafeMove may generate other warning messages anytime during the Axis Calibration routine.

Safety controller not synchronized - SafeMove message

	Action	Note
1	SafeMove generates the message "Safety controller not synchronized".  xx1500002480	
2	Confirm unsynchronized state by pressing **Acknowledge** to continue Axis Calibration procedure.	
3	Restart Axis Calibration procedure by pressing **Play**.	

Continues on next page

© Copyright 2014 - 2017 ABB. All rights reserved.

Unsynchronized speed exceeded - SafeMove message while saving robot data

	Action	Note
1	SafeMove generates the message "Unsynchronized speed exceeded" while saving robot data. 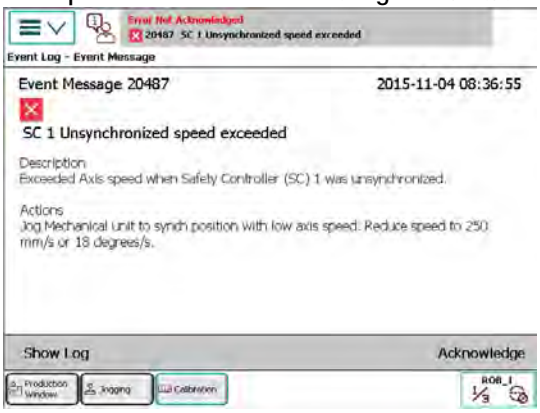 xx1500002481	
2	Press **Acknowledge** to continue Axis Calibration procedure.	
3	Restart Axis Calibration procedure by pressing **Play**.	

Unsynchronized time limit expired - SafeMove message anytime during Axis Calibration routine

	Action	Note
1	SafeMove generates the message "Unsynchronized time limit expired" (anytime). 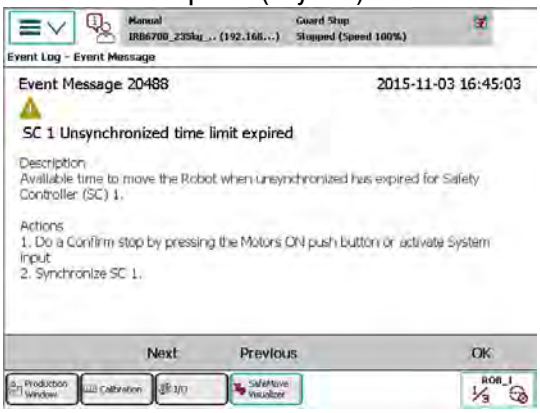 xx1500002482	
2	Press **OK** to continue Axis Calibration procedure.	
3	Restart Axis Calibration procedure by pressing **Play**.	

Continues on next page

© Copyright 2014 - 2017 ABB. All rights reserved.

5.4.4 Axis Calibration - Running the calibration procedure
Continued

After calibration

	Action	Note
1	Check the o-ring on the plug. Replace the plug with new spare part, if missing or damaged.	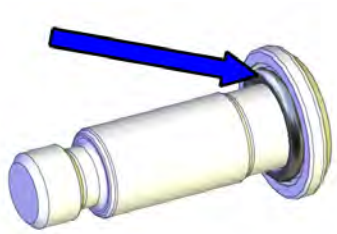 xx1600001143 Protective plug for bushing: 3HAC059556-001. : 3HAC059557-001. Protective plug for bushing, Clean Room Protective plug for bushing, food grade lubrication
2	Reinstall the protective plugs in both bushings on each axis, directly after the axis is calibrated. Replace the plug with new spare part, if missing or damaged.	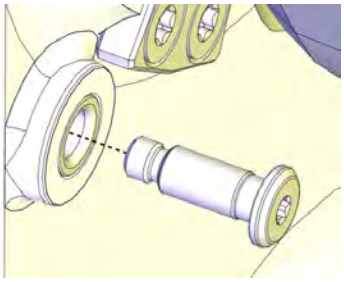 xx1600001144

© Copyright 2014 - 2017 ABB. All rights reserved.

5.5 Calibrating with manual calibration method

5.5.1 Manual calibration method - calibration position

Calibration position

The position of the axis to be calibrated is illustrated in each calibration section respectively.

The table below specifies the exact axis positions in degrees.

Axis	IRB 1200-5/0.9	IRB 1200-7/0.7
1	+84.474066º	+84.474066º
2	+131.862755º	+136.862755º
3	+72.250000º	+72.250000º
4	0º	0º
5	-90º	-90º
6	0º	0º

© Copyright 2014 - 2017 ABB. All rights reserved.

5.5.2 Manual calibration method - content of calibration toolkit 3HAC051256-001

Content of calibration toolkit 3HAC051256-001

Content in calibration toolkit 3HAC051256-001	Art. no.	Note
Calibration pin, axis 1	3HAC051209-001	
Calibration stop pin, axis 1	3HAC051211-001	
Calibration tool, axis 4	3HAC051212-001	
Calibration tool, axes 5 and 6	3HAC051213-001	
Conical screw M3	3HAC055410-001	Used together with the calibration tool, axis 4.
Guide pin	3HAC034513-001	Used together with the calibration tool, axis 5/6.
Calibration block with pin	3HAC051254-001	Fitted on tubular.
Hex socket head screw	9ADA183-19	M5x40
Hex socket head screw	9ADA183-41	M8x45
Hex socket head screw	9ADA183-15	M5x20
Hex socket head screw	9ADA183-5	M4x16
Hex socket head screw	9ADA183-14	M5x16

© Copyright 2014 - 2017 ABB. All rights reserved.

5.5.3 Manual calibration method - calibrating axis 1

Calibration position of axis 1

The figure shows axis 1 in calibration position, with calibration tools fitted.

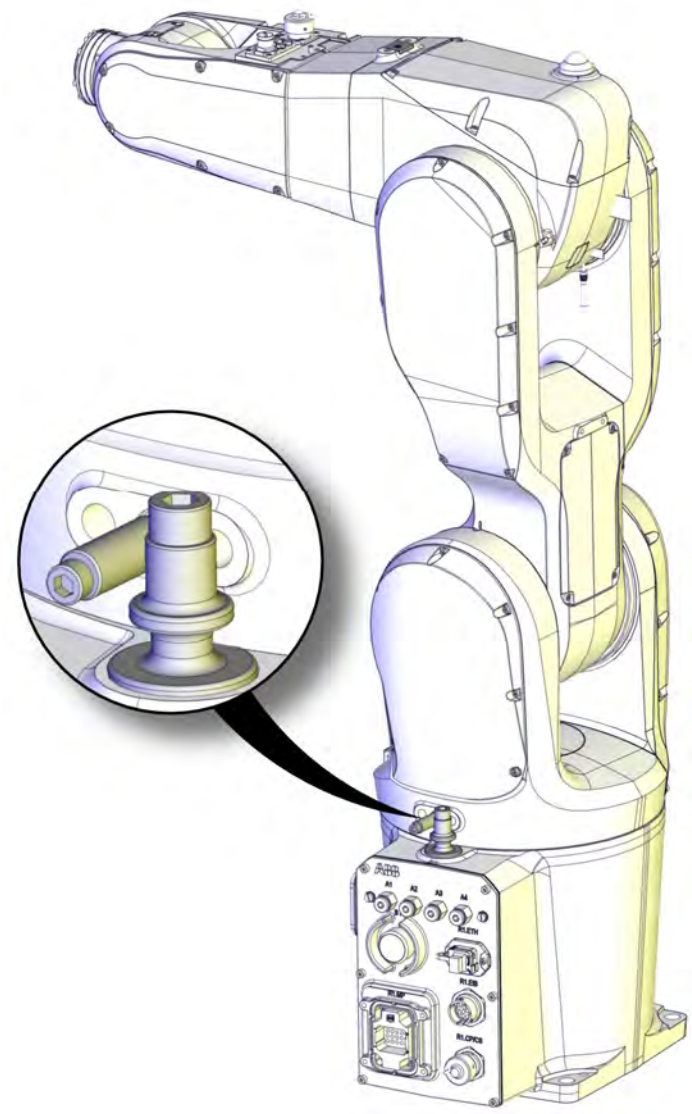

xx1400001209

Required equipment

Equipment	Art. no.	Note
Calibration toolkit, manual calibration	3HAC051256-001	Includes calibration tools, pins and attachment screws for manual calibration method. i

Continues on next page

© Copyright 2014 - 2017 ABB. All rights reserved.

5.5.3 Manual calibration method - calibrating axis 1

Continued

Equipment	Art. no.	Note
Protection plug	3HAC051199-001	Protection plug for the calibration hole in the swing (the hole is used during calibration of axis 1 with the manual calibration method). Replace if damaged.

i The robot is calibrated by either manual calibration or Axis Calibration at factory. Always use the same calibration method as used at the factory.

Information about valid calibration method is found on the calibration label or in the calibration menu on the FlexPendant.

If no data is found related to standard calibration, manual calibration is used as default.

Required consumables

Equipment	Art. no.	Note
Cleaning agent	-	Isopropanol

Calibrating axis 1

Moving the robot to calibration position

	Action	Note
1	Jog all axes to zero position.	
2	Remove the axis-1 mechanical stop pin.	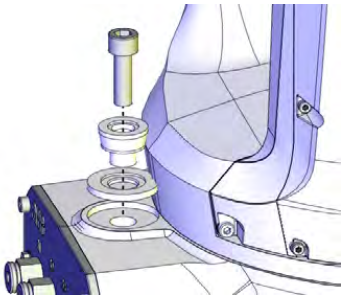 xx1400000392

Continues on next page

© Copyright 2014 - 2017 ABB. All rights reserved.

	Action	Note
3	The axis-1 calibration stop pin should now be fitted to the mechanical stop pin attachment hole, but it does not fit if the axis 1 stands in its zero position. Jog axis 1 to find a suitable position where the axis-1 calibration stop pin can be fitted to the attachment hole in the base. Fit the axis-1 calibration stop pin to the base and secure it with the screw.	Screw: M8x45. Tightening torque: 10 Nm. **Note** The position of the robot shown in the figure, is only a suggestion. The suitable position in which the axis-1 calibration pin is possible to fit may differ. 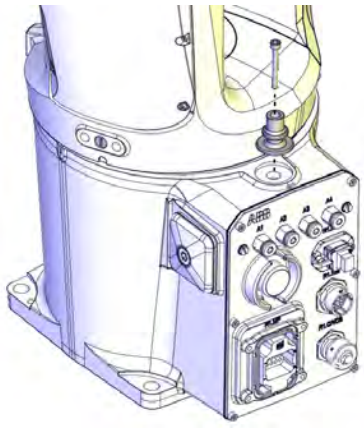 xx1400001100
4	Jog axis 1 to zero position.	
5	**DANGER** Turn off all: • electric power supply • hydraulic pressure supply • air pressure supply to the robot, before entering the robot working area.	
6	Remove the protection plug from the swing.	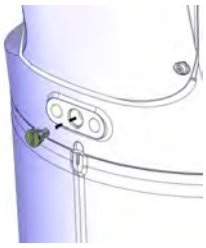 xx1400001134

Continues on next page

© Copyright 2014 - 2017 ABB. All rights reserved.

5.5.3 Manual calibration method - calibrating axis 1

Continued

	Action	Note
7	Fit the axis-1 calibration pin to the swing and secure it with the screw. **CAUTION** Hold the calibration pin firmly with your hands while securing it with the screw, in order to keep a straight line when fitting the screw. The calibration pin must not be tilted.	Screw: M5x40. TighteningTorque: 5 Nm. 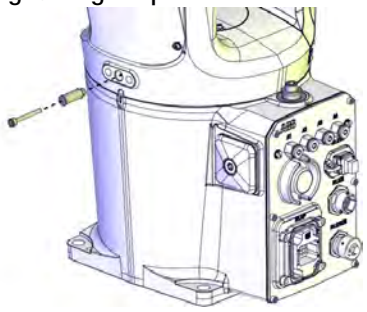 xx1400001099
8	Turn on the electric power to the robot.	
9	**DANGER** When releasing the holding brakes, the robot axes may move very quickly and sometimes in unexpected ways! Make sure no personnel is near or beneath the robot arm!	
10	Release the brakes and manually rotate axis 1 until the two axis-1 calibration pins touches each other gently. There should be no pressing force between the pins. When doing this, pay attention to robot pose in order to avoid arm collision. When the axis is in position, release the brake release button to activate the brakes again.	How to release the brakes is detailed in *Manually releasing the brakes on page 78*. 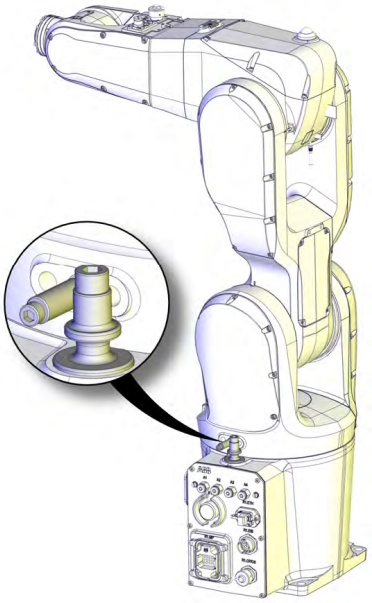 xx1400001209

Continues on next page

© Copyright 2014 - 2017 ABB. All rights reserved.

Performing the fine calibration procedure

	Action	Note
1	**WARNING** Do not fine calibrate the robot without special equipment used for axis calibration! It would cause an unsatisfied accuracy in the robot movement.	
2	Choose fine calibration from Calib menu On the **ABB** menu, tap **Calibration**. All mechanical units connected to the system are shown along with their calibration status.	
3	Tap to select the mechanical unit and then tap **Calib. Parameters**. 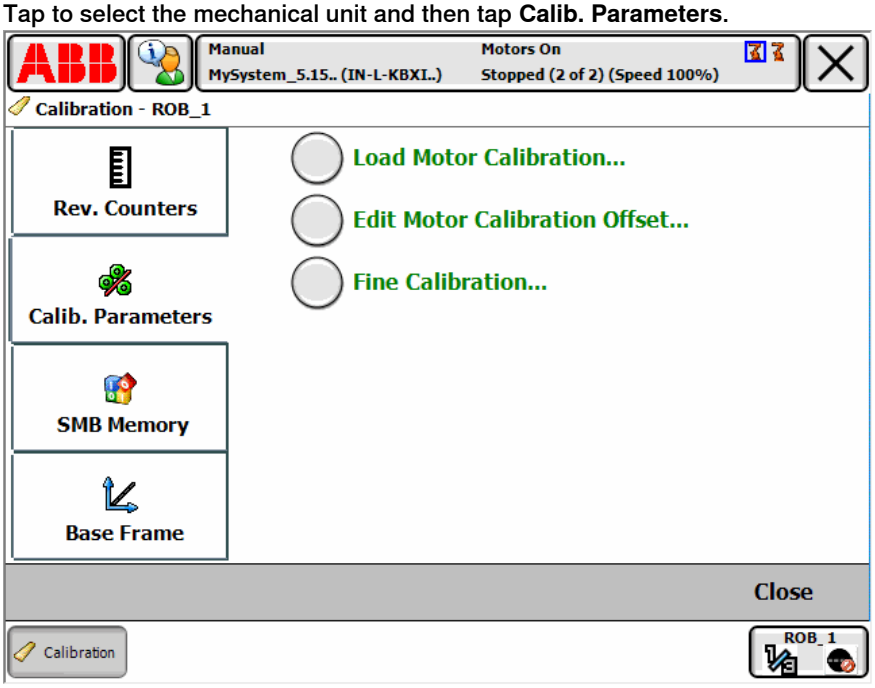 en0400001127	
4	Tap **Fine Calibration...**. A dialog box is displayed, urging you to use external equipment to perform the actual calibration. Make sure all necessary calibration equipment is fitted for the axis to be calibrated. A dialog box is displayed, warning that updating the revolution counters may change programmed robot positions: • Tap **Yes** to proceed. • Tap **No** to cancel.	
5	Select the check-box for the current axis/axes to be calibrated.	

Continues on next page

© Copyright 2014 - 2017 ABB. All rights reserved.

5.5.3 Manual calibration method - calibrating axis 1

Continued

	Action	Note
6	Tap **Calibrate**. A dialog box is displayed, warning that calibration of the selected axes will be changed, which cannot be undone: • Tap **Calibrate** to proceed. • Tap **Cancel** to cancel. Tapping **Calibrate** results in briefly displaying a dialog box, announcing that the calibration process has started. The axis is calibrated and the system returns to the list of available mechanical units.	

Checking and finalizing the calibration

	Action	Note
1	Release the brakes and manually rotate the axis to apart the calibration pins from each other. This is done to avoid damage on the pins if incorrect operation should occur during next step of jogging.	
2	Jog axis 1 to zero degree using the FlexPendant.	
3	Check that the synchronization marks on axis 1 are aligned with eachother. Are they aligned within the tolerances? • If yes, the calibration is verified OK. • If no, redo the fine calibration procedure.	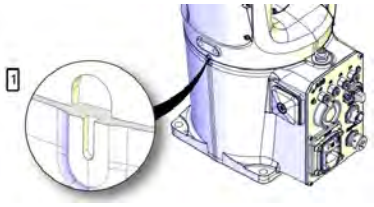 xx1400001092
4	Remove the axis-1 calibration pin from the swing and refit the protection plug.	Protection plug: 3HAC051199-001 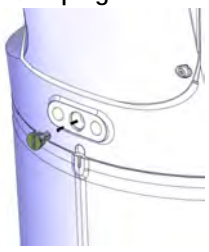 xx1400001134
5	Rotate axis 1 to a suitable position to get access and remove the calibration stop pin from the base.	
6	Remove the axis-1 calibration stop pin from the base and refit the axis-1 mechanical stop.	Tightening torque: 12 Nm 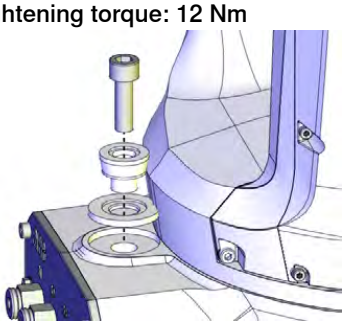 xx1400000392

Continues on next page

© Copyright 2014 - 2017 ABB. All rights reserved.

After calibration

	Action	Note
1	Write down the new system parameters on a new label and stick on top of the calibration label on the robot.	

© Copyright 2014 - 2017 ABB. All rights reserved.

5.5.4 Manual calibration method - calibrating axis 2

Calibration position of axis 2

The figure shows axis 2 in calibration position.

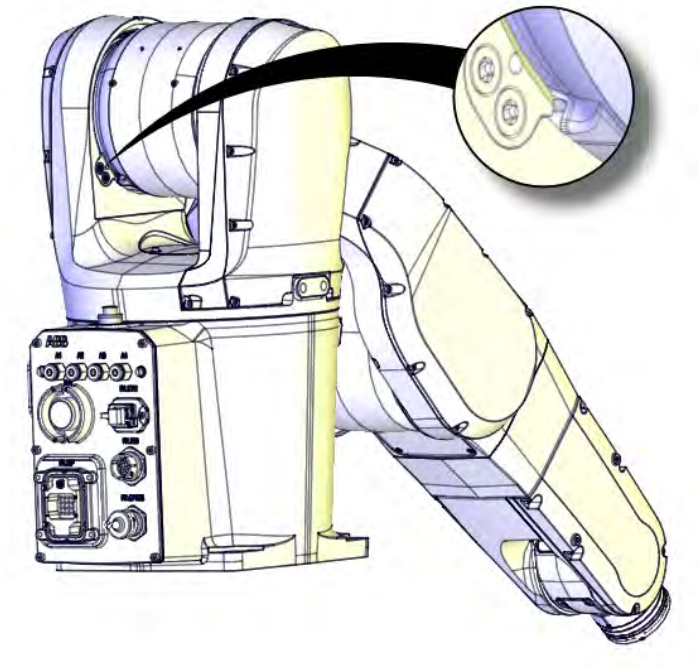

xx1400001201

Required equipment

Calibration of axis 2 is done by moving the lower arm so that the calibration pin and calibration stop touches each other gently.

These parts are already fitted to the robot, no extra installation of calibration equipment is required.

See figures below for reference, and follow the step-by-step procedure that follows.

Calibration pin	Calibration stop
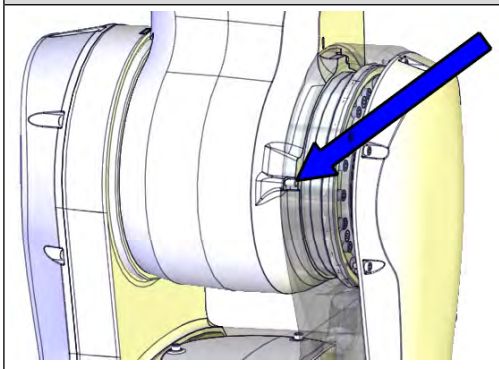 xx1400001135	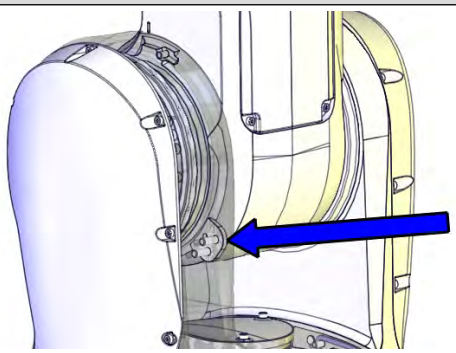 xx1400001136
The press fit mechanical stop pin fitted to the lower arm is used for calibration of axis 2. No additional equipment is required.	The axis-2 mechanical stop fitted to the swing is used for calibration of axis 2. No additional equipment is required.

Continues on next page

© Copyright 2014 - 2017 ABB. All rights reserved.

Calibrating axis 2

Moving the robot to calibration position

	Action	Note
1	Jog all axes to zero position.	
2	**DANGER** When releasing the holding brakes, the robot axes may move very quickly and sometimes in unexpected ways! Make sure no personnel is near or beneath the robot arm!	
3	Release the brakes and manually rotate axis 2 until the axis-2 calibration pin and calibration stop touches each other gently. There should be no pressing force between the pins. When doing this, pay attention to robot pose in order to avoid arm collision. When the axis is in position, release the brake release button to activate the brakes again.	How to release the brakes is detailed in *Manually releasing the brakes on page 78*. The calibration pin and calibration stop are illustrated in *Required equipment on page 766*. 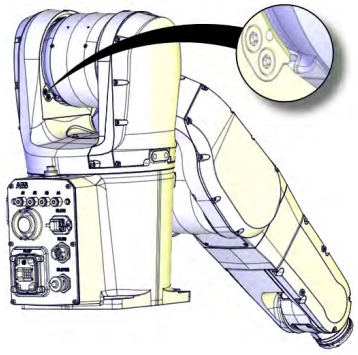 xx1400001201

Performing the fine calibration procedure

	Action	Note
1	**WARNING** Do not fine calibrate the robot without special equipment used for axis calibration! It would cause an unsatisfied accuracy in the robot movement.	
2	Choose fine calibration from Calib menu On the **ABB** menu, tap **Calibration**. All mechanical units connected to the system are shown along with their calibration status.	

Continues on next page

© Copyright 2014 - 2017 ABB. All rights reserved.

5.5.4 Manual calibration method - calibrating axis 2

Continued

	Action	Note
3	Tap to select the mechanical unit and then tap **Calib. Parameters**. 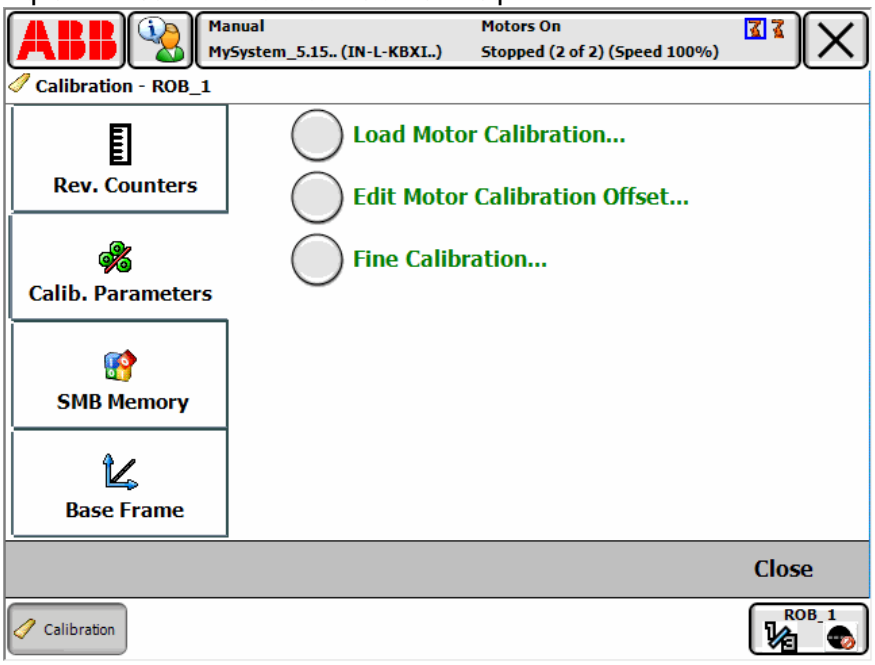 en0400001127	
4	Tap **Fine Calibration...**. A dialog box is displayed, urging you to use external equipment to perform the actual calibration. Make sure all necessary calibration equipment is fitted for the axis to be calibrated. A dialog box is displayed, warning that updating the revolution counters may change programmed robot positions: • Tap **Yes** to proceed. • Tap **No** to cancel.	
5	Select the check-box for the current axis/axes to be calibrated.	
6	Tap **Calibrate**. A dialog box is displayed, warning that calibration of the selected axes will be changed, which cannot be undone: • Tap **Calibrate** to proceed. • Tap **Cancel** to cancel. Tapping **Calibrate** results in briefly displaying a dialog box, announcing that the calibration process has started. The axis is calibrated and the system returns to the list of available mechanical units.	

Checking and finalizing the calibration

	Action	Note
1	Release the brakes and manually rotate the axis to apart the calibration pins from each other. This is done to avoid damage on the pins if incorrect operation should occur during next step of jogging.	

Continues on next page

© Copyright 2014 - 2017 ABB. All rights reserved.

	Action	Note
2	Jog axis 2 to zero degree using the FlexPendant.	
3	Check that the synchronization marks on axis 2 are aligned with eachother. Are they aligned within the tolerances? • If yes, the calibration is verified OK. • If no, redo the fine calibration procedure.	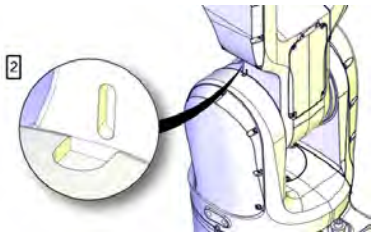 xx1400001093

After calibration

	Action	Note
1	Write down the new system parameters on a new label and stick on top of the calibration label on the robot.	

© Copyright 2014 - 2017 ABB. All rights reserved.

5.5.5 Manual calibration method - calibrating axis 3

Calibration position of axis 3

The figure shows axis 3 in calibration position.

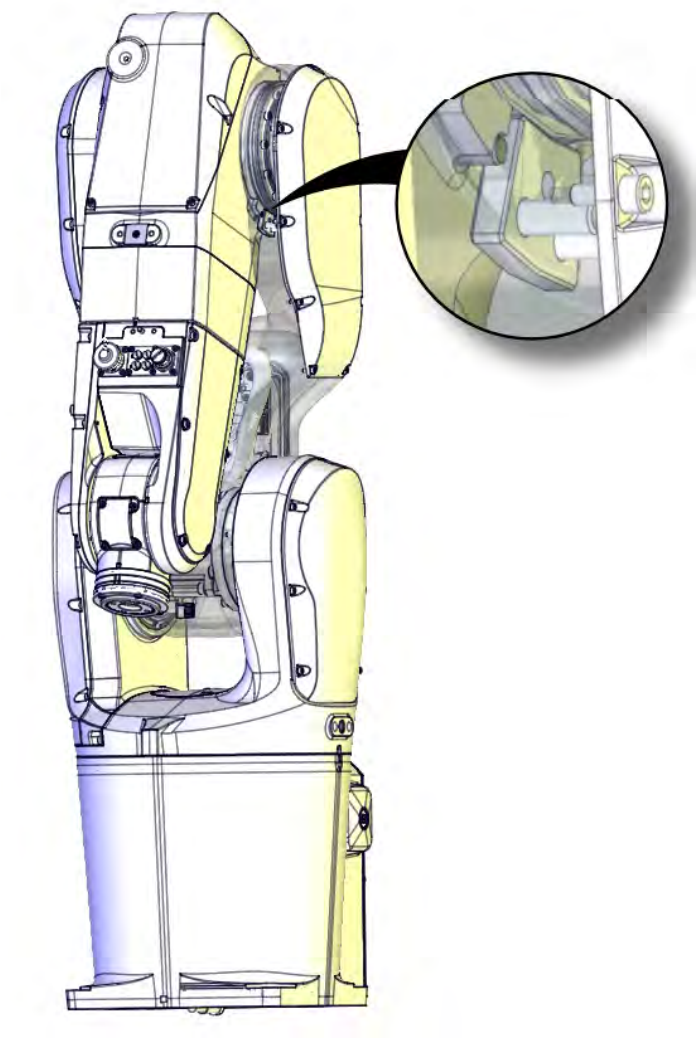

xx1400001204

Required equipment

Calibration of axis 3 is done by moving the upper arm so that the calibration pin and calibration stop touches each other gently.

These parts are already fitted to the robot, no extra installation of calibration equipment is required.

Continues on next page

© Copyright 2014 - 2017 ABB. All rights reserved.

See figures below for reference, and follow the step-by-step procedure that follows the figures.

Calibration pin	Calibration stop
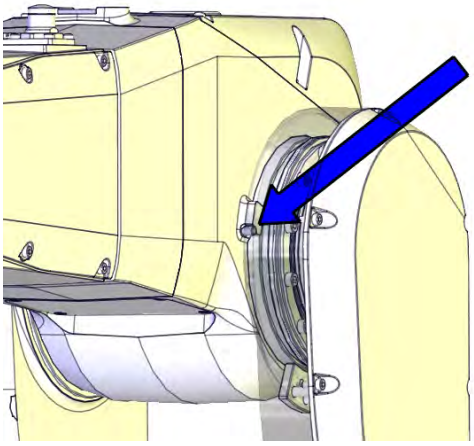 xx1400001202	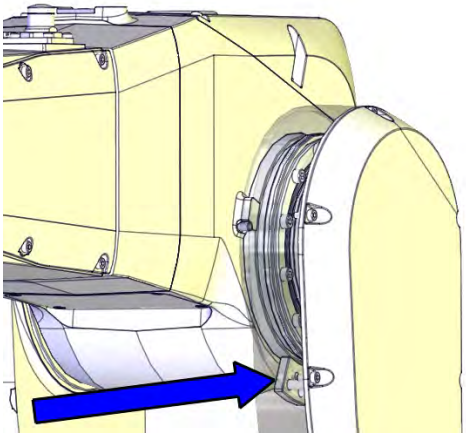 xx1400001203
The press fit mechanical stop pin fitted to the upper arm is used for calibration of axis 3. No additional equipment is required.	The axis-3 mechanical stop fitted to the lower arm is used for calibration of axis 3. No additional equipment is required.

Calibrating axis 3

Moving the robot to calibration position

	Action	Note
1	Jog all axes to zero position.	
2	**DANGER** When releasing the holding brakes, the robot axes may move very quickly and sometimes in unexpected ways! Make sure no personnel is near or beneath the robot arm!	

Continues on next page

© Copyright 2014 - 2017 ABB. All rights reserved.

5.5.5 Manual calibration method - calibrating axis 3

Continued

	Action	Note
3	Release the brakes and manually rotate axis 3 until the axis-3 calibration calibration pin and calibration stop touches each other gently. There should be no pressing force between the pins. When doing this, pay attention to robot pose in order to avoid arm collision. When the axis is in position, release the brake release button to activate the brakes again.	How to release the brakes is detailed in *Manually releasing the brakes on page 78*. The calibration pin and calibration stop are illustrated in *Required equipment on page 770*. 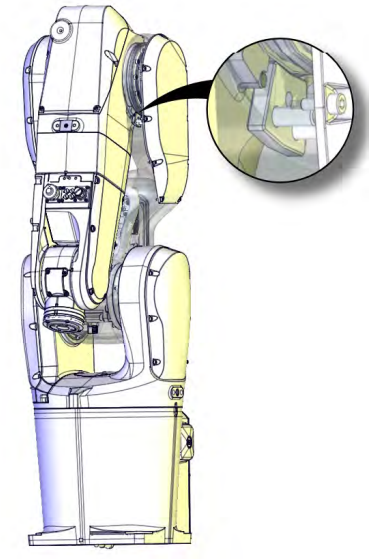 xx1400001204

Performing the fine calibration procedure

	Action	Note
1	**WARNING** Do not fine calibrate the robot without special equipment used for axis calibration! It would cause an unsatisfied accuracy in the robot movement.	
2	Choose fine calibration from Calib menu On the **ABB** menu, tap **Calibration**. All mechanical units connected to the system are shown along with their calibration status.	

Continues on next page

© Copyright 2014 - 2017 ABB. All rights reserved.

	Action	Note
3	Tap to select the mechanical unit and then tap **Calib. Parameters**. 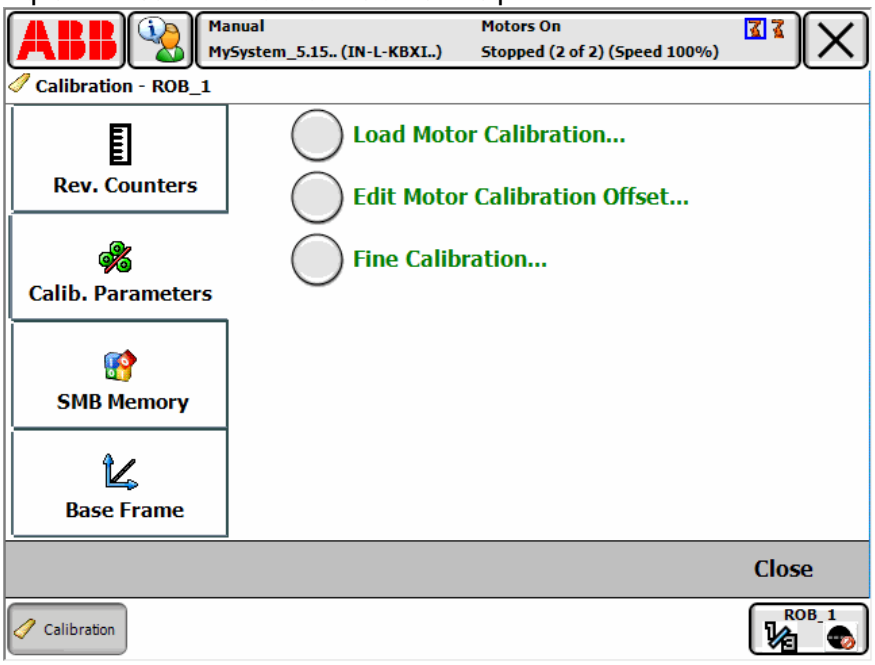 en0400001127	
4	Tap **Fine Calibration...**. A dialog box is displayed, urging you to use external equipment to perform the actual calibration. Make sure all necessary calibration equipment is fitted for the axis to be calibrated. A dialog box is displayed, warning that updating the revolution counters may change programmed robot positions: • Tap **Yes** to proceed. • Tap **No** to cancel.	
5	Select the check-box for the current axis/axes to be calibrated.	
6	Tap **Calibrate**. A dialog box is displayed, warning that calibration of the selected axes will be changed, which cannot be undone: • Tap **Calibrate** to proceed. • Tap **Cancel** to cancel. Tapping **Calibrate** results in briefly displaying a dialog box, announcing that the calibration process has started. The axis is calibrated and the system returns to the list of available mechanical units.	

Checking and finalizing the calibration

	Action	Note
1	Release the brakes and manually rotate the axis to apart the calibration pins from each other. This is done to avoid damage on the pins if incorrect operation should occur during next step of jogging.	

Continues on next page

© Copyright 2014 - 2017 ABB. All rights reserved.

5.5.5 Manual calibration method - calibrating axis 3
Continued

	Action	Note
2	Jog axis 3 to zero degree using the FlexPendant.	
3	Check that the synchronization marks on axis 3 are aligned with eachother. Are they aligned within the tolerances? • If yes, the calibration is verified OK. • If no, redo the fine calibration procedure.	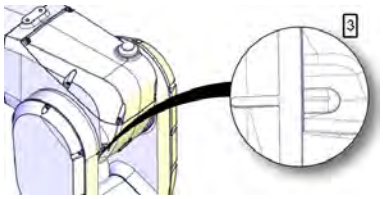 xx1400001094

After calibration

	Action	Note
1	Write down the new system parameters on a new label and stick on top of the calibration label on the robot.	

© Copyright 2014 - 2017 ABB. All rights reserved.

5.5.6 Manual calibration method - calibrating axis 4

Calibration position of axis 4

The figure shows axis 4 in calibration position, with calibration tools fitted.

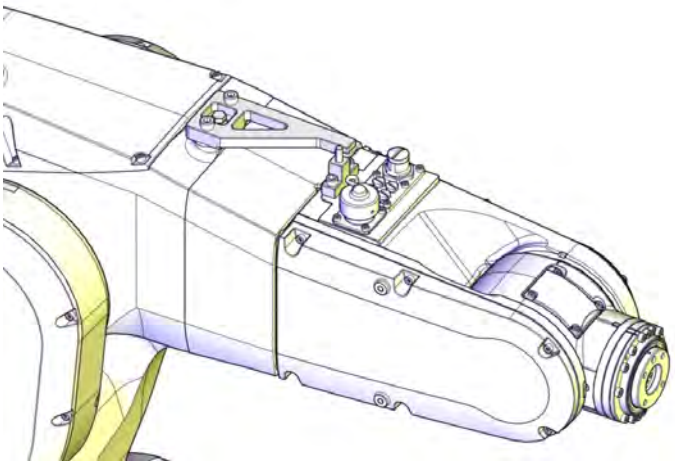

xx1400001207

Required equipment

Equipment	Art. no.	Note
Calibration toolkit, manual calibration	3HAC051256-001	Includes calibration tools, pins and attachment screws for manual calibration method. [i]

[i] The robot is calibrated by either manual calibration or Axis Calibration at factory. Always use the same calibration method as used at the factory.
Information about valid calibration method is found on the calibration label or in the calibration menu on the FlexPendant.
If no data is found related to standard calibration, manual calibration is used as default.

Required consumables

Equipment	Art. no.	Note
Cleaning agent	-	Isopropanol

Calibrating axis 4

Moving the robot to calibration position

	Action	Note
1	Jog all axes to zero position. Rotate axis 4 some degrees toward positive direction to avoid interference between the calibration tools when fitting them.	

Continues on next page

© Copyright 2014 - 2017 ABB. All rights reserved.

5.5.6 Manual calibration method - calibrating axis 4

Continued

	Action	Note
2	**DANGER** Turn off all: • electric power supply • hydraulic pressure supply • air pressure supply to the robot, before entering the robot working area.	
3	Remove the protection cover from the housing.	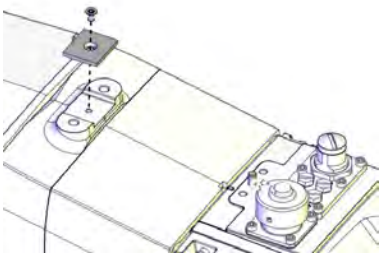 xx1400001205
4	Clean the location surfaces on the housing and the calibration tool surfaces to make sure there is no paint or burrs on these surfaces.	
5	Fit the calibration block to the tubular.	Screws: M4x16. 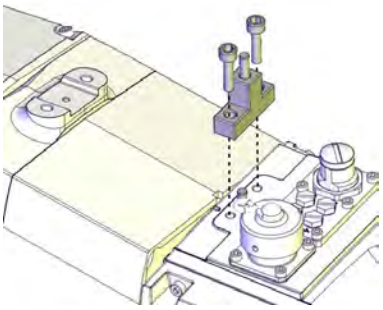 xx1400001208
6	Locate the calibration tool by the location surface on the housing. **Tip** Press down slightly on the calibration tool to make sure the tool attaches the location surface tightly.	

Continues on next page

© Copyright 2014 - 2017 ABB. All rights reserved.

	Action	Note
7	Fit the conical screw to the calibration tool.	Conical screw M3 (3HAC055410-001, 1 pcs) Tightening torque: 1 Nm 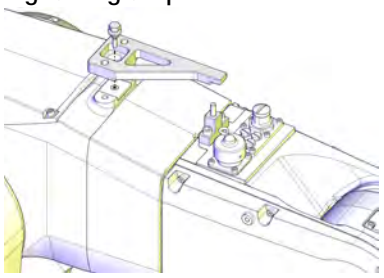 xx1500001608
8	Fit the M5 screws.	Screws: M5x20. Tightening torque: 2.5 Nm 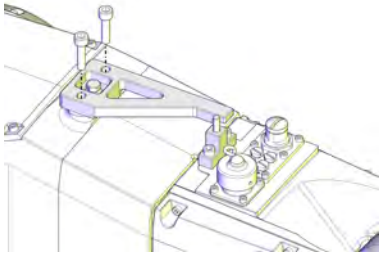 xx1400001117
9	Turn on the electric power to the robot.	
10	**DANGER** When releasing the holding brakes, the robot axes may move very quickly and sometimes in unexpected ways! Make sure no personnel is near or beneath the robot arm!	
11	Release the brakes and manually rotate axis 4 until the axis-4 calibration tool and the calibration block touches each other gently. There should be no pressing force between the pins. When doing this, pay attention to robot pose in order to avoid arm collision. When the axis is in position, release the brake release button to activate the brakes again.	How to release the brakes is detailed in *Manually releasing the brakes on page 78*. 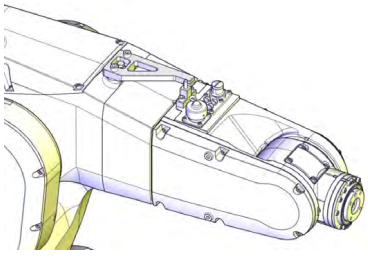 xx1400001207

Continues on next page

© Copyright 2014 - 2017 ABB. All rights reserved.

5.5.6 Manual calibration method - calibrating axis 4

Continued

Performing the fine calibration procedure

	Action	Note
1	**WARNING** Do not fine calibrate the robot without special equipment used for axis calibration! It would cause an unsatisfied accuracy in the robot movement.	
2	Choose fine calibration from Calib menu On the **ABB** menu, tap **Calibration**. All mechanical units connected to the system are shown along with their calibration status.	
3	Tap to select the mechanical unit and then tap **Calib. Parameters**. 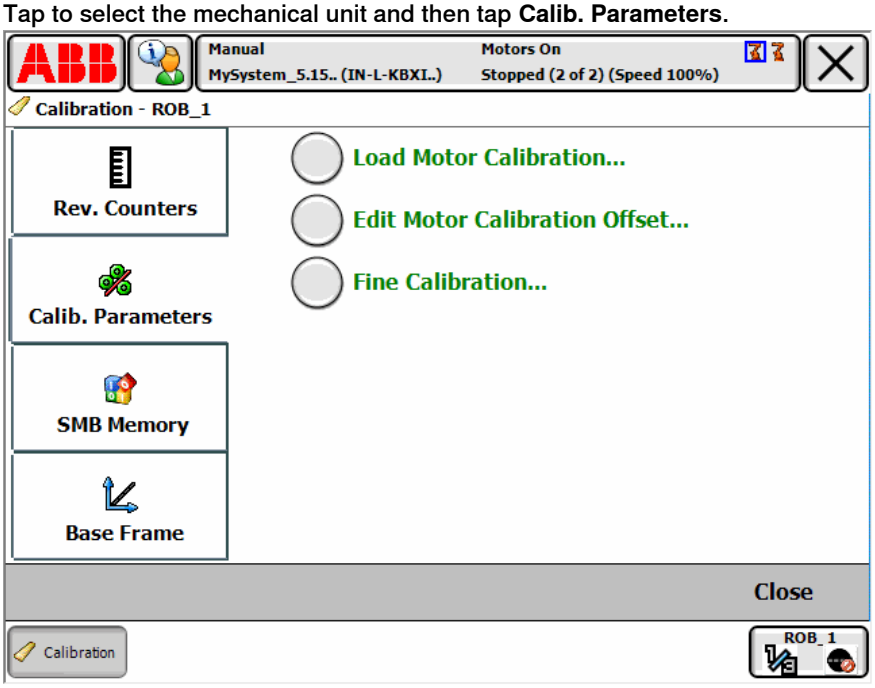 en0400001127	
4	Tap **Fine Calibration...**. A dialog box is displayed, urging you to use external equipment to perform the actual calibration. Make sure all necessary calibration equipment is fitted for the axis to be calibrated. A dialog box is displayed, warning that updating the revolution counters may change programmed robot positions: • Tap **Yes** to proceed. • Tap **No** to cancel.	
5	Select the check-box for the current axis/axes to be calibrated.	

Continues on next page

© Copyright 2014 - 2017 ABB. All rights reserved.

	Action	Note
6	Tap **Calibrate**. A dialog box is displayed, warning that calibration of the selected axes will be changed, which cannot be undone: • Tap **Calibrate** to proceed. • Tap **Cancel** to cancel. Tapping **Calibrate** results in briefly displaying a dialog box, announcing that the calibration process has started. The axis is calibrated and the system returns to the list of available mechanical units.	

Checking and finalizing the calibration

	Action	Note
1	Release the brakes and manually rotate the axis to apart the calibration pins from each other. This is done to avoid damage on the pins if incorrect operation should occur during next step of jogging.	
2	Remove the calibration tool of axes 4, 5, and 6 from the tubular.	
3	Remove the axis-4 calibration tool from the housing.	
4	Jog axis 4 to zero degree using the FlexPendant.	
5	Check that the synchronization marks on axis 4 are aligned with eachother. Are they aligned within the tolerances? • If yes, the calibration is verified OK. • If no, redo the fine calibration procedure.	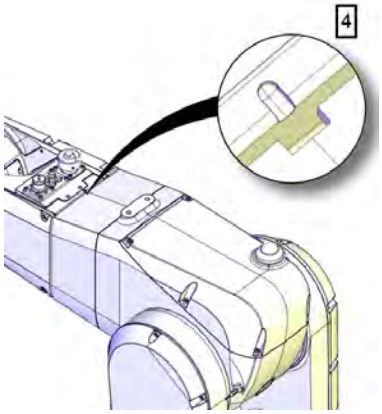 xx1400001095
6	Refit the protection cover to the housing.	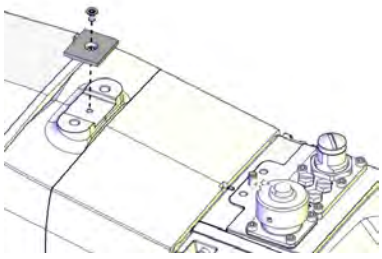 xx1400001205

Continues on next page

© Copyright 2014 - 2017 ABB. All rights reserved.

5.5.6 Manual calibration method - calibrating axis 4
Continued

After calibration

	Action	Note
1	Write down the new system parameters on a new label and stick on top of the calibration label on the robot.	

© Copyright 2014 - 2017 ABB. All rights reserved.

5.5.7 Manual calibration method - calibrating axis 5 and axis 6

Calibration position of axes 5 and 6

The figure shows axes 5 and 6 in calibration position, with calibration tools fitted.

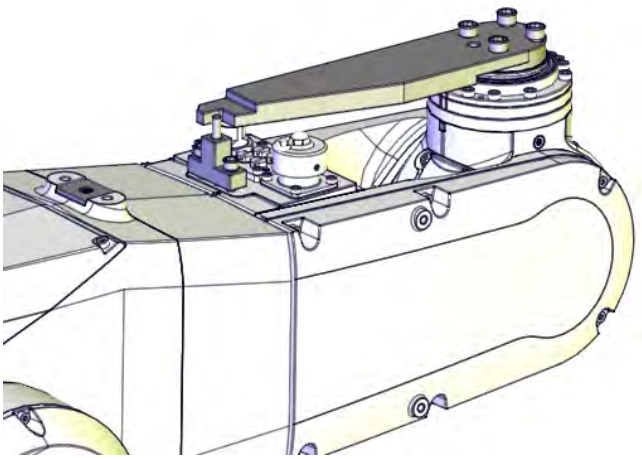

xx1400001206

Required equipment

Equipment	Art. no.	Note
Calibration toolkit, manual calibration	3HAC051256-001	Includes calibration tools, pins and attachment screws for manual calibration method. [i]

[i] The robot is calibrated by either manual calibration or Axis Calibration at factory. Always use the same calibration method as used at the factory.

Information about valid calibration method is found on the calibration label or in the calibration menu on the FlexPendant.

If no data is found related to standard calibration, manual calibration is used as default.

Required consumables

Equipment	Art. no.	Note
Cleaning agent	-	Isopropanol

Calibrating axis 5 and axis 6

Moving the robot to calibration position

	Action	Note
1	Jog all axes to zero position.	
2	**DANGER** Turn off all: • electric power supply • hydraulic pressure supply • air pressure supply to the robot, before entering the robot working area.	

Continues on next page

© Copyright 2014 - 2017 ABB. All rights reserved.

5.5.7 Manual calibration method - calibrating axis 5 and axis 6

Continued

	Action	Note
3	Fit the calibration block to the tubular.	Screws: M4x16. 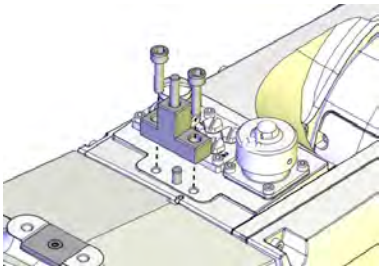 xx1400001114
4	Fit the guide pin to the disk and then fit the calibration tool of axes 5 and 6.	Screws: M5x16. 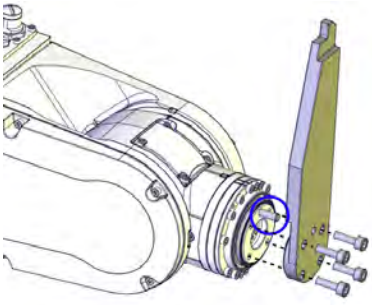 xx1400001115
5	**DANGER** When releasing the holding brakes, the robot axes may move very quickly and sometimes in unexpected ways! Make sure no personnel is near or beneath the robot arm!	
6	Release the brakes and manually rotate axes 5 and 6 until the axis-5/6 calibration tool and the calibration block touches each other gently. There should be no pressing force between the pins. When doing this, pay attention to robot pose in order to avoid arm collision. When the axis is in position, release the brake release button to activate the brakes again.	How to release the brakes is detailed in *Manually releasing the brakes on page 78*. 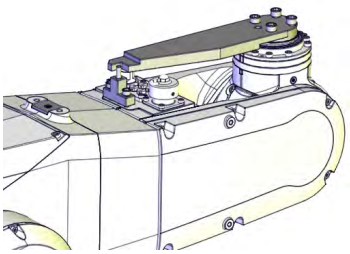 xx1400001206

Continues on next page

© Copyright 2014 - 2017 ABB. All rights reserved.

Performing the fine calibration procedure

	Action	Note
1	**WARNING** Do not fine calibrate the robot without special equipment used for axis calibration! It would cause an unsatisfied accuracy in the robot movement.	
2	Choose fine calibration from Calib menu On the **ABB** menu, tap **Calibration**. All mechanical units connected to the system are shown along with their calibration status.	
3	Tap to select the mechanical unit and then tap **Calib. Parameters**. 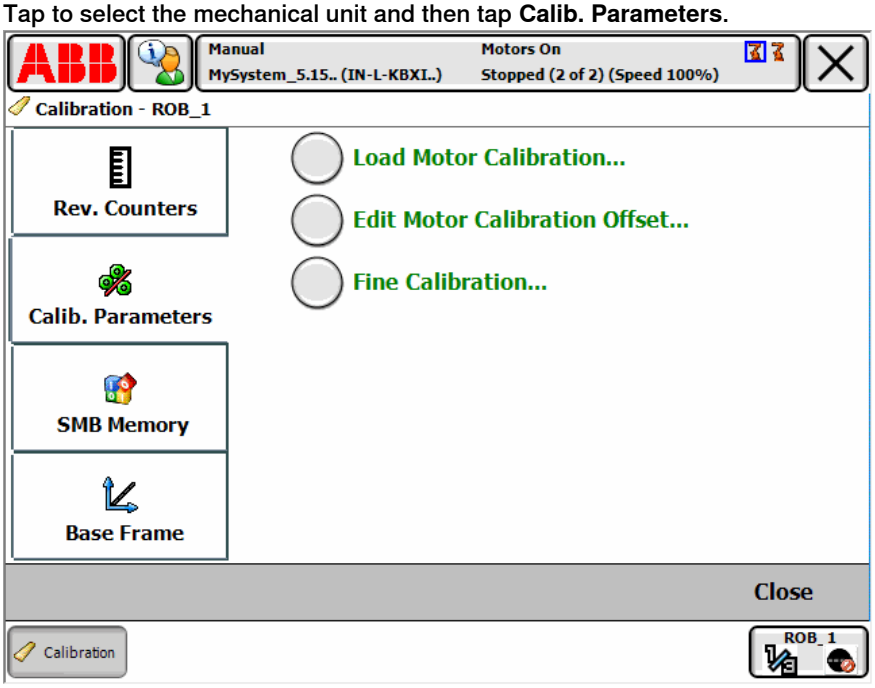 en0400001127	
4	Tap **Fine Calibration...**. A dialog box is displayed, urging you to use external equipment to perform the actual calibration. Make sure all necessary calibration equipment is fitted for the axis to be calibrated. A dialog box is displayed, warning that updating the revolution counters may change programmed robot positions: • Tap **Yes** to proceed. • Tap **No** to cancel.	
5	Select the check-box for the current axis/axes to be calibrated.	

Continues on next page

© Copyright 2014 - 2017 ABB. All rights reserved.

5.5.7 Manual calibration method - calibrating axis 5 and axis 6
Continued

	Action	Note
6	Tap **Calibrate**. A dialog box is displayed, warning that calibration of the selected axes will be changed, which cannot be undone: • Tap **Calibrate** to proceed. • Tap **Cancel** to cancel. Tapping **Calibrate** results in briefly displaying a dialog box, announcing that the calibration process has started. The axis is calibrated and the system returns to the list of available mechanical units.	

Checking and finalizing the calibration

	Action	Note
1	Release the brakes and manually rotate the axis to apart the calibration pins from each other. This is done to avoid damage on the pins if incorrect operation should occur during next step of jogging.	
2	Jog axis 5 and 6 to zero degree using the FlexPendant.	
3	Check that the synchronization marks on axis 5 and axis 6 are aligned with eachother. Are they aligned within the tolerances? • If yes, the calibration is verified OK. • If no, redo the fine calibration procedure.	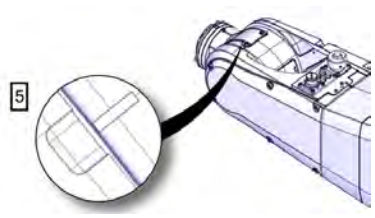 xx1400001096 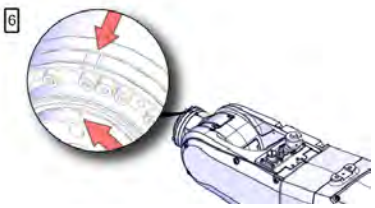 xx1400001097
4	Remove the calibration block from the tubular.	
5	Remove the calibration tool of axes 5 and 6 from the disk.	

After calibration

	Action	Note
1	Write down the new system parameters on a new label and stick on top of the calibration label on the robot.	

© Copyright 2014 - 2017 ABB. All rights reserved.

5.6 Verifying the calibration

Introduction

Always verify the results after calibrating *any* robot axis to verify that all calibration positions are correct.

Verifying the calibration

Use this procedure to verify the calibration result.

	Action	Note
1	Run the calibration home position program twice. Do not change the position of the robot axes after running the program!	See *Checking the synchronization position on page 786*.
2	Adjust the *synchronization marks* when the calibration is done, if necessary.	This is detailed in section *Synchronization marks and synchronization position for axes on page 737*.
3	Write down the values on a new label and stick it on top of the calibration label. The label is located on one side of the base.	
4	Remove any calibration equipment from the robot.	

© Copyright 2014 - 2017 ABB. All rights reserved.

5.7 Checking the synchronization position

Introduction

Check the synchronization position of the robot before beginning any programming of the robot system. This may be done:

- Using a `MoveAbsJ` instruction with argument zero on all axes.
- Using the **Jogging** window on the FlexPendant.

Using a `MoveAbsJ` instruction

Use this procedure to create a program that runs all the robot axes to their synchronization position.

	Action	Note
1	On ABB menu tap **Program editor**.	
2	Create a new program.	
3	Use **MoveAbsJ** in the **Motion&Proc** menu.	

4	Create the following program:
	`MoveAbsJ [[0,0,0,0,0,0],`
	`[9E9,9E9,9E9,9E9,9E9,9E9]]`
	`\NoEOffs, v1000, fine, tool0`	

5	Run the program in manual mode.	
6	Check that the synchronization marks for the axes align correctly. If they do not, update the revolution counters.	See *Synchronization marks and synchronization position for axes on page 737* and *Updating revolution counters on page 739*.

Using the jogging window

Use this procedure to jog the robot to the synchronization position of all axes.

	Action	Note
1	On the **ABB** menu, tap **Jogging**.	
2	Tap **Motion mode** to select group of axes to jog.	
3	Tap to select the axis to jog, axis 1, 2, or 3.	
4	Manually run the robots axes to a position where the axis position value read on the FlexPendant, is equal to zero.	
5	Check that the synchronization marks for the axes align correctly. If they do not, update the revolution counters.	See *Synchronization marks and synchronization position for axes on page 737* and *Updating revolution counters on page 739*.

© Copyright 2014 - 2017 ABB. All rights reserved.

6 Decommissioning

6.1 Introduction

Introduction

This section contains information to consider when taking a product, robot or controller, out of operation.

It deals with how to handle potentially dangerous components and potentially hazardous materials.

General

All used grease/oils and dead batteries **must** be disposed of in accordance with the current legislation of the country in which the robot and the control unit are installed.

If the robot or the control unit is partially or completely disposed of, the various parts **must** be grouped together according to their nature (which is all iron together and all plastic together), and disposed of accordingly. These parts **must** also be disposed of in accordance with the current legislation of the country in which the robot and control unit are installed.

© Copyright 2014 - 2017 ABB. All rights reserved.

6.2 Environmental information

Hazardous material

The table specifies some of the materials in the product and their respective use throughout the product.

Dispose components properly to prevent health or environmental hazards.

Material	Example application
Batteries, NiCad or Lithium	Encoder interface board
Copper	Cables, motors
Cast iron/nodular iron	Gears
Steel	Gears, screws, washers, brackets
Stainless steel	Mechanical stop
Neodymium	Motors
Oil, grease	Gears
Aluminium	Base, lower arm, upper arm

Oil and grease

Where possible, arrange for oil and grease to be recycled. Dispose of via an authorized person/contractor in accordance with local regulations. Do not dispose of oil and grease near lakes, ponds, ditches, down drains, or onto soil. Incineration must be carried out under controlled conditions in accordance with local regulations.

Also note that:

- Spills can form a film on water surfaces causing damage to organisms. Oxygen transfer could also be impaired.
- Spillage can penetrate the soil causing ground water contamination.

© Copyright 2014 - 2017 ABB. All rights reserved.

6.3 Scrapping of robot

Important when scrapping the robot



DANGER

When a robot is disassembled while being scrapped, it is very important to remember the following before disassembling starts, in order to prevent injuries:

- Always remove all batteries from the robot. If a battery is exposed to heat, for example from a blow torch, it will explode.
- Always remove all oil/grease in gearboxes. If exposed to heat, for example from a blow torch, the oil/grease will catch fire.
- When motors are removed from the robot, the robot will collapse if it is not properly supported before the motor is removed.

© Copyright 2014 - 2017 ABB. All rights reserved.

This page is intentionally left blank

7 Robot description

7.1 Type A of IRB 1200

Type A - Axis Calibration

The difference between IRB 1200 and IRB 1200 Type A is that the Type A is calibrated with Axis Calibration. On each axis there are bushings for installation of calibration tools.

As a result of this, the castings differ between IRB 1200 and IRB 1200 Type A.

Note

IRB 1200 Type B is designed based on IRB 1200 Type A so that Type B has the bushings for installation of calibration tools too.

The difference between IRB 1200 Type A and IRB 1200 Type B is that Type B also supports SafeMove 2. See *Type B of IRB 1200 on page 792*.

How to know which type the robot is?

The type label on the base of the robot tells if the robot is calibrated with Axis Calibration.

Those robots are named IRB 1200 Type A.

Note

If no type label attached on the robot, use the bushings on each axis to identify a robot calibrated with Axis Calibration.

Those robots which are not equipped for Axis Calibration are simply named IRB 1200 (no type specified).

© Copyright 2014 - 2017 ABB. All rights reserved.

7.2 Type B of IRB 1200

Type B - SafeMove 2

The difference between IRB 1200 Type B and other IRB 1200 versions is that the Type B supports SafeMove 2.

As a result of this, the following parts differ from other versions:

- Base
- Drive unit, axis 2, axis 3, axis 5 and axis 6
- Motor with pulley, axis 4 and axis 5
- Manipulator cable harness
- Battery pack
- SMB unit (replacing EIB unit)

IRB 1200 Type B is designed based on IRB 1200 Type A so that Type B has the bushings for installation of calibration tools too.

How to know which type the robot is?

The type label on the base of the robot tells if the robot supports SafeMove 2.

Those robots are named IRB 1200 Type B.

© Copyright 2014 - 2017 ABB. All rights reserved.

7.3 Description of spare part versions

7.3.1 Spare part versions for the base on IP40/IP67 robots

Spare part versions for the base on IP40/IP67 robots

Note

IRB 1200 has different base versions that are not compatible with each other. Always use the following list as a reference to check the base installed on robot and order the correct spare parts.

Base installed on robot (spare part number)	Article number in WebConfig	What to order	How to see which version is installed on robot
3HAC049628-001	3HAC044533-001	Order: • base 3HAC059553-001 • swing 3HAC059554-001 • IP40: sealing ring 3HAC058568-001 • IP67: sealing ring + gasket + V-ring 3HAC058001-001	Look on the outside of the base. Base 3HAC049628-001 has no hole on the side of the base.  xx1600000124
3HAC057999-001	3HAC056657-001	Order: • base 3HAC059553-001	Base 3HAC057999-001 has a hole on the side of the base.  xx1600000051

Continues on next page

© Copyright 2014 - 2017 ABB. All rights reserved.

7.3.1 Spare part versions for the base on IP40/IP67 robots
Continued

Base installed on robot (spare part number)	Article number in WebConfig	What to order	How to see which version is installed on robot
3HAC059553-001	3HAC058386-001	Order: • base 3HAC059553-001	Base 3HAC059553-001 has a bushing for fitting calibration tool for Axis Calibration. 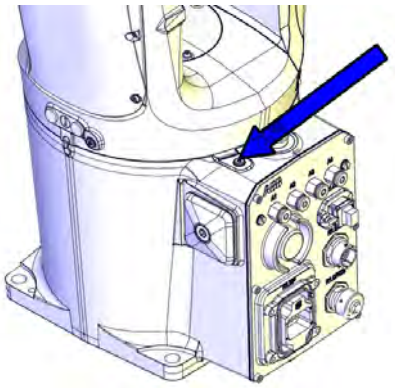 xx1600001037

© Copyright 2014 - 2017 ABB. All rights reserved.

7.3.2 Spare part versions for the swing on IP40/IP67 robots

Spare part versions for the swing on IP40/IP67 robots

> **Note**
>
> IRB 1200 has different swing versions that are not compatible with each other. Always use the following list as a reference to check the swing installed on robot and order the correct spare parts.

Swing installed on robot (spare part number)	Article number in WebConfig	What to order	How to see which version is installed on robot
3HAC049632-001	3HAC044534-001	Order: • swing 3HAC059554-001 • IP67: sealing ring + gasket + V-ring 3HAC058001-001	Look underneath the swing, the surface is flat. 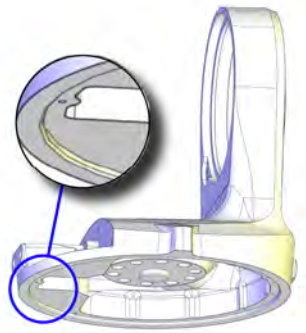 xx1600000052
3HAC058000-001	3HAC056656-001	Order: • swing 3HAC059554-001	Look underneath the swing, there is a groove. 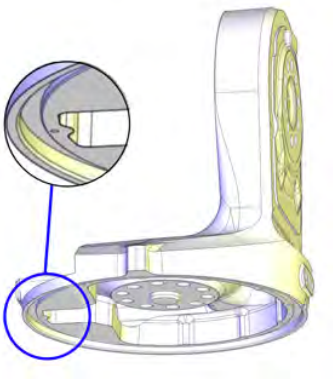 xx1600000053

Continues on next page

© Copyright 2014 - 2017 ABB. All rights reserved.

7.3.2 Spare part versions for the swing on IP40/IP67 robots
Continued

Swing installed on robot (spare part number)	Article number in WebConfig	What to order	How to see which version is installed on robot
3HAC059554-001	3HAC058387-001	Order: • swing 3HAC059554-001	The swing has a bushing for fitting calibration tool for Axis Calibration. 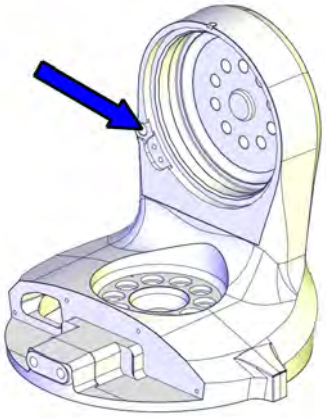 xx1600001038

© Copyright 2014 - 2017 ABB. All rights reserved.

7.3.3 Spare part versions for the axis-1 sealing ring on IP40/IP67 robots

Spare part versions for the axis-1 sealing ring on IP40/IP67 robots

Note

IRB 1200 has different axis-1 sealing ring versions that are not compatible with each other. Always use the following list as a reference to check the sealing ring installed on robot and order the correct spare parts.

Sealing ring installed on robot (spare part number)	Article number in WebConfig	What to order	How to see which version is installed on robot
3HAC044676-001	3HAC044676-001	Order: • sealing ring 3HAC044676-001	The sealing ring is flat. 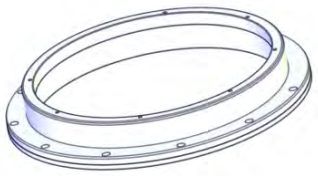 xx1600000125
3HAC056658-001	3HAC056658-001	Order: • IP40: sealing ring 3HAC058568-001 • IP67: sealing ring + gasket + V-ring 3HAC058001-001	The sealing ring has one folded wall on both sides. 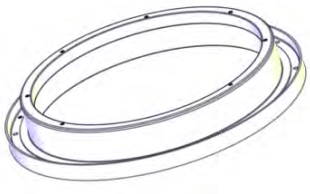 xx1600000126
3HAC058568-001	3HAC058568-001	Order: • sealing ring 3HAC058568-001	The sealing ring is flat and the edge is thinner.  xx1600001039

© Copyright 2014 - 2017 ABB. All rights reserved.

7.3.4 Spare part versions for the housing on Type A robots

Spare part versions for the housing on Type A robots

Note

IRB 1200 and IRB 1200 Type A have different housing versions that are not compatible with each other. Always use the following list as a reference to check the housing installed on robot and to order the correct spare parts.

Robot variant	Housing installed on robot (spare part number)	Article number in WebConfig	What to order	How to see which version is installed on robot
IRB 1200-7/0.7	3HAC059680-001	3HAC044544-001	Order: • housing (IRB 1200-7/0.7): 3HAC059680-001	The plane (encircled in the figure) on housing 3HAC059680-001 has no painting, while that on housing 3HAC059721-001 is painted. 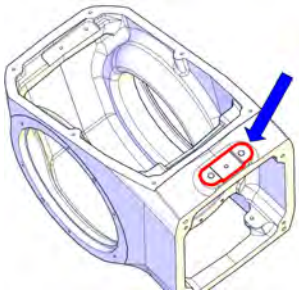 xx1600001127
	3HAC059721-001	3HAC058389-001	Order: • housing (IRB 1200-7/0.7): 3HAC059721-001	
IRB 1200-5/0.9	3HAC059681-001	3HAC04456-001	Order: • housing (IRB 1200-5/0.9): 3HAC059681-001	The plane (encircled in the figure) on housing 3HAC059681-001 has no painting, while that on housing 3HAC059722-001 is painted. 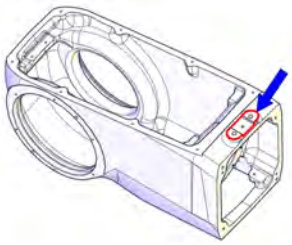 xx1600001129
	3HAC059722-001	3HAC058393-001	Order: • housing (IRB 1200-5/0.9): 3HAC059722-001	

© Copyright 2014 - 2017 ABB. All rights reserved.

7.3.5 Spare part versions for the tubular on Type A robots

Spare part versions for the tubular on Type A robots

Note

IRB 1200 and IRB 1200 Type A have different tubular versions that are not compatible with each other. Always use the following list as a reference to check the tubular installed on robot and to order the correct spare parts.

Tubular installed on robot (spare part number)	Article number in WebConfig	What to order	How to see which version is installed on robot
3HAC059693-001	3HAC044548-001	Order: • tubular with sleeve: 3HAC059693-001	The plane (encircled in the figure) on tubular 3HAC059693-001 has no painting, while that on tubular 3HAC059723-001 is painted. 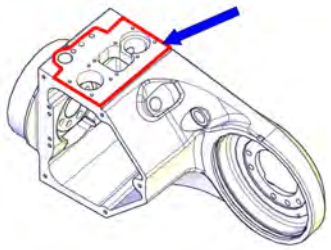 xx1600001128
3HAC059723-001	3HAC058390-001	Order: • tubular with sleeve: 3HAC059723-001	

© Copyright 2014 - 2017 ABB. All rights reserved.

7.3.6 Spare part versions for the tubular cover on Clean Room robots

Spare part versions for the tubular cover on Clean Room robots

Note

IRB 1200 with protection type Clean Room has different tubular cover versions that are not compatible with each other. Always use the following list as a reference to check the tubular cover installed on robot and to order the correct spare parts.

Tubular cover installed on Clean Room robots (spare part number)	Article number in WebConfig	What to order	How to see which version is installed on robot
3HAC056144-001	3HAC044550-001	Order: • tubular cover, clean room: 3HAC056144-001	Tubular cover 3HAC056144-001 has six screw holes. 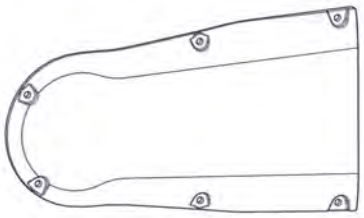 xx1600001117
3HAC059708-001	3HAC058929-001	Order: • tubular cover, clean room: 3HAC059708-001	Tubular cover 3HAC059708-001 has eight screw holes. 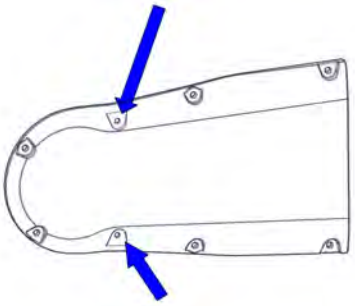 xx1600001118

© Copyright 2014 - 2017 ABB. All rights reserved.

8 Reference information

8.1 Introduction

General

This chapter includes general information, complementing the more specific information in the different procedures in the manual.

© Copyright 2014 - 2017 ABB. All rights reserved.

8.2 Applicable standards

Note

The listed standards are valid at the time of the release of this document. Phased out or replaced standards are removed from the list when needed.

Standards, EN ISO

The product is designed in accordance with the requirements of:

Standard	Description
EN ISO 12100	Safety of machinery - General principles for design - Risk assessment and risk reduction
EN ISO 13849-1	Safety of machinery, safety related parts of control systems - Part 1: General principles for design
EN ISO 13850	Safety of machinery - Emergency stop - Principles for design
EN ISO 10218-1	Robots for industrial environments - Safety requirements -Part 1 Robot
EN ISO 9787	Robots and robotic devices -- Coordinate systems and motion nomenclatures
EN ISO 9283	Manipulating industrial robots, performance criteria, and related test methods
EN ISO 14644-1 [i]	Classification of air cleanliness
EN ISO 13732-1	Ergonomics of the thermal environment - Part 1
EN IEC 61000-6-4 (option 129-1)	EMC, Generic emission
EN IEC 61000-6-2	EMC, Generic immunity
EN IEC 60974-1 [ii]	Arc welding equipment - Part 1: Welding power sources
EN IEC 60974-10 [ii]	Arc welding equipment - Part 10: EMC requirements
EN IEC 60204-1	Safety of machinery - Electrical equipment of machines - Part 1 General requirements
IEC 60529	Degrees of protection provided by enclosures (IP code)
IEC 61340-5-1:2010	Protection of electronic devices from electrostatic phenomena - General requirements

[i] Only robots with protection Clean Room.
[ii] Only valid for arc welding robots. Replaces EN IEC 61000-6-4 for arc welding robots.

European standards

Standard	Description
EN 614-1	Safety of machinery - Ergonomic design principles - Part 1: Terminology and general principles
EN 574	Safety of machinery - Two-hand control devices - Functional aspects - Principles for design

Continues on next page

© Copyright 2014 - 2017 ABB. All rights reserved.

Other standards

Standard	Description
ANSI/RIA R15.06	Safety requirements for industrial robots and robot systems
ANSI/UL 1740 (option 429-1)	Safety standard for robots and robotic equipment
CAN/CSA Z 434-14 (option 429-1)	Industrial robots and robot Systems - General safety requirements
ANSI/ESD S20.20:2007	Protection of Electrical and Electronic Parts, Assemblies and Equipment (Excluding Electrically Initiated Explosive Devices)

© Copyright 2014 - 2017 ABB. All rights reserved.

8.3 Unit conversion

Converter table

Use the following table to convert units used in this manual.

Quantity	Units		
Length	1 m	3.28 ft.	39.37 in
Weight	1 kg	2.21 lb.	
Weight	1 g	0.035 ounces	
Pressure	1 bar	100 kPa	14.5 psi
Force	1 N	0.225 lbf	
Moment	1 Nm	0.738 lbf-ft	
Volume	1 L	0.264 US gal	

© Copyright 2014 - 2017 ABB. All rights reserved.

8.4 Screw joints

General

This section describes how to tighten the various types of screw joints on the IRB 1200.

The instructions and torque values are valid for screw joints comprised of metallic materials and do *not* apply to soft or brittle materials.

UNBRAKO screws

UNBRAKO is a special type of screw recommended by ABB for certain screw joints. It features special surface treatment (Gleitmo as described below) and is extremely resistant to fatigue.

Whenever used, this is specified in the instructions, and in such cases, *no other type of replacement screw* is allowed. Using other types of screws will void any warranty and may potentially cause serious damage or injury.

Gleitmo treated screws

Gleitmo is a special surface treatment to reduce the friction when tightening the screw joint. Screws treated with Gleitmo may be reused 3-4 times before the coating disappears. After this the screw must be discarded and replaced with a new one.

When handling screws treated with Gleitmo, protective gloves of **nitrile rubber** type should be used.

Screws lubricated in other ways

Screws lubricated with Molycote 1000 should *only* be used when specified in the repair, maintenance or installation procedure descriptions.

In such cases, proceed as follows:

1 Apply lubricant to the screw thread.
2 Apply lubricant between the plain washer and screw head.
3 Tighten to the torque as described in the procedures.

Lubricant	Article number
Molycote 1000 (molybdenum disulphide grease)	11712016-618

Tightening torque

Before tightening any screw, note the following:

- Determine whether a **standard** tightening torque or **special** torque is to be applied. The **standard torques** are specified in the following tables. Any **special torques** are specified in the repair, maintenance or installation procedure descriptions. **Any special torque specified overrides the standard torque!**
- Use the *correct tightening torque* for each type of screw joint.
- Only use *correctly calibrated* torque keys.
- Always *tighten the joint by hand,* and never use pneumatic tools.

Continues on next page

© Copyright 2014 - 2017 ABB. All rights reserved.

8.4 Screw joints
Continued

- Use the *correct tightening technique*, that is *do not* jerk. Tighten the screw in a slow, flowing motion.
- Maximum allowed total deviation from the specified value is **10%**!

Oil-lubricated screws with slotted or cross-recess head screws

The following table specifies the recommended standard tightening torque for *oil-lubricated screws* with *slotted or cross-recess head screws.* Any special torque specified in the repair, maintenance or installation procedure overrides the standard torque!

Oil-lubricated screws with allen head screws

The following table specifies the recommended standard tightening torque for *oil-lubricated screws* with *allen head screws.* Any special torque specified in the repair, maintenance or installation procedure overrides the standard torque!

Dimension	Tightening torque (Nm) Class 8.8, oil-lubricated	Tightening torque (Nm) Class 10.9, oil-lubricated	Tightening torque (Nm) Class 12.9, oil-lubricated
M5	6	-	-
M6	10	-	-
M8	24	34	40
M10	47	67	80
M12	82	115	140
M16	200	290	340
M20	400	560	670
M24	680	960	1150

Lubricated screws (Molycote, Gleitmo or equivalent) with allen head screws

The following table specifies the recommended standard tightening torque for *screws lubricated with Molycote 1000, Gleitmo 603 or equivalent* with *allen head screws.* Any special torque specified in the repair, maintenance or installation procedure overrides the standard torque!

Dimension	Tightening torque (Nm) Class 10.9, lubricated [i]	Tightening torque (Nm) Class 12.9, lubricated [i]
M8	28	35
M10	55	70
M12	96	120
M16	235	280
M20	460	550
M24	790	950

[i] Lubricated with Molycote 1000, Gleitmo 603 or equivalent

© Copyright 2014 - 2017 ABB. All rights reserved.

8.5 Weight specifications

Definition

In installation, repair, and maintenance procedures, weights of the components handled are sometimes specified. All components exceeding 22 kg (50 lbs) are highlighted in this way.

To avoid injury, ABB recommends the use of a lifting accessory when handling components with a weight exceeding 22 kg. A wide range of lifting accessories and devices are available for each manipulator model.

Example

Following is an example of a weight specification in a procedure:

	Action	Note
	CAUTION The robot weighs . IRB 1200-5/0.9: 54 kg IRB 1200-7/0.7: 52 kg All lifting accessories used must be sized accordingly!	

© Copyright 2014 - 2017 ABB. All rights reserved.

8.6 Standard toolkit

General

All service (repairs, maintenance, and installation) procedures contains lists of tools required to perform the specified activity.

All special tools required are listed directly in the procedures while all the tools that are considered standard are gathered in the standard toolkit and defined in the following table.

This way, the tools required are the sum of the standard toolkit and any tools listed in the instruction.

Contents, standard toolkit

Qty	Tool	Rem.
1	Socket head cap 2-17 mm	
1	Torque wrench 0.3-45 Nm	
1	Torque wrench 55 Nm ± 5 Nm	For securing robot to foundation.
1	Ratchet head for torque wrench 1/2	
1	Hex socket head cap no. 2.5 socket 1/2" bit L=110 mm	
1	Small screwdriver	
1	T-handle with ball head	
1	Small cutting plier	
1	Plastic mallet	
1	Needle-nose plier	

© Copyright 2014 - 2017 ABB. All rights reserved.

8.7 Special tools

General

All service instructions contain lists of tools required to perform the specified activity. The required tools are a sum of standard tools, defined in the section *Standard toolkit on page 808*, and of special tools, listed directly in the instructions and also gathered in this section.

Special tools

Continues on next page

© Copyright 2014 - 2017 ABB. All rights reserved.

8.7 Special tools

Tools and equipment with spare part number: (These tools can be ordered from ABB)			Cable harness	EIB/SMB unit	Axis-4 FPC unit	Axis-5 FPC unit	Housing extender unit (including sealings)	Base spare parts	Swing spare parts	Lower arm	Signal lamp	Axis-3 radial sealing and sealing ring	Axis-1 mechanical stop	Axis-2 mechanical stop	Axis-3 mechanical stop	Axis-4 mechanical stop	Tubular spare parts	Axis-4 motor with pulley	Axis-5 motor with pulley	Axis-5 and axis-6 drive unit	Axis-4 gearbox, drive shaft and pulley	Axis-4 timing belt	Axis-5 timing belt
Guide pins																							
3HAC049703-001	Guide pin for axis-1 gear unit		3					3	3														
3HAC049704-001	Guide pin for axis-2 gear unit								3	3													
3HAC049705-001	Guide pin for upper arm									3													
3HAC049706-001	Guide pin for tilt unit (axis 5)																3			3			
Lifting accessories																							
3HAC049711-001	Lifting accessory, robot Includes lifting accessories, lifting beam and screws.	 xx1400000542	1					1															
-	Roundsling, 2 m Length: 2 m. Lifting capacity: 100 kg.		1					1	1														
Press, puller and unloading tools																							
3HAC049692-001	Axis-1 sealing assembly tool set Used to refit the axis-1 radial sealing.	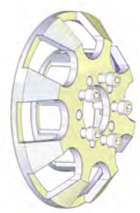 xx1400000535						1															
3HAC049694-001	Axis-2 sealing assembly tool set Used to refit the radial sealing, if replacement is needed.	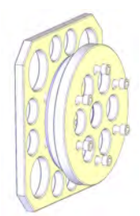 xx1400000541							1														

Continues on next page

© Copyright 2014 - 2017 ABB. All rights reserved.

Tools and equipment with spare part number: (These tools can be ordered from ABB)			Cable harness	EIB/SMB unit	Axis-4 FPC unit	Axis-5 FPC unit	Housing extender unit (including sealings)	Base spare parts	Swing spare parts	Lower arm	Signal lamp	Axis-3 radial sealing and sealing ring	Axis-1 mechanical stop	Axis-2 mechanical stop	Axis-3 mechanical stop	Axis-4 mechanical stop	Tubular spare parts	Axis-4 motor with pulley	Axis-5 motor with pulley	Axis-5 and axis-6 drive unit	Axis-4 gearbox, drive shaft and pulley	Axis-4 timing belt	Axis-5 timing belt
3HAC049697-001	Axis-3 sealing assembly tool set Used to refit the axis-3 radial sealing.	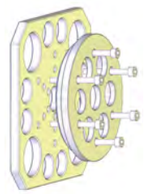 xx1400000538										1												
3HAC049699-001	Axis-4 sealing assembly tool set Used to refit the radial sealing, if replacement is needed.	 xx1400000539			1											1					1			
3HAC049701-001	Axis-5 sealing assembly tool set Used to refit the radial sealing, if replacement is needed.	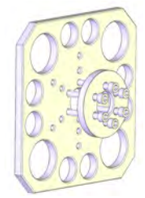 xx1400000540				1											1			1				
Other tools																								
-	24 VDC power supply		1	1	1	1	1	1	1	1	1	1	1	1	1	1	1	1	1	1	1	1	1	1
3HAC051256-001	Calibration toolkit, manual calibration		1		1		1	1	1	1							1	1	1	1	1	1	1	1
3HAC058080-001	Calibration tool box, Axis Calibration		1		1		1	1	1	1							1	1	1	1	1	1	1	1

Continues on next page

© Copyright 2014 - 2017 ABB. All rights reserved.

8.8 Lifting accessories and lifting instructions

General

Many repair and maintenance activities require different pieces of lifting accessories, which are specified in each procedure.

The use of each piece of lifting accessories is *not* detailed in the activity procedure, but in the instruction delivered with each piece of lifting accessories.

This implies that the instructions delivered with the lifting accessories should be stored for later reference.

© Copyright 2014 - 2017 ABB. All rights reserved.

9 Spare parts

9.1 Spare part lists and illustrations

Location

Spare parts and exploded views are not included in the manual but delivered as a separate document on the documentation DVD.

© Copyright 2014 - 2017 ABB. All rights reserved.

This page is intentionally left blank

10 Circuit diagrams

10.1 Circuit diagrams

Overview

The circuit diagrams are not included in this manual, but delivered as separate documents on the documentation DVD. See the article numbers in the tables below.

Controllers

Product	Article numbers for circuit diagrams
Circuit diagram - IRC5	*3HAC024480-011*
Circuit diagram - IRC5 Compact	*3HAC049406-003*
Circuit diagram - IRC5 Panel Mounted Controller	*3HAC026871-020*
Circuit diagram - Euromap	*3HAC024120-004*
Circuit diagram - Spot welding cabinet	*3HAC057185-001*

Robots

Product	Article numbers for circuit diagrams
Circuit diagram - IRB 120	*3HAC031408-003*
Circuit diagram - IRB 140 type C	*3HAC6816-3*
Circuit diagram - IRB 260	*3HAC025611-001*
Circuit diagram - IRB 360	*3HAC028647-009*
Circuit diagram - IRB 460	*3HAC036446-005*
Circuit diagram - IRB 660	*3HAC025691-001*
Circuit diagram - IRB 760	*3HAC025691-001*
Circuit diagram - IRB 1200	*3HAC046307-003*
Circuit diagram - IRB 1410	*3HAC2800-3*
Circuit diagram - IRB 1600/1660	*3HAC021351-003*
Circuit diagram - IRB 1520	*3HAC039498-007*
Circuit diagram - IRB 2400	*3HAC6670-3*
Circuit diagram - IRB 2600	*3HAC029570-007*
Circuit diagram - IRB 4400/4450S	*3HAC9821-1*
Circuit diagram - IRB 4600	*3HAC029038-003*
Circuit diagram - IRB 6400RF	*3HAC8935-1*
Circuit diagram - IRB 6600 type A	*3HAC13347-1* *3HAC025744-001*
Circuit diagram - IRB 6600 type B	*3HAC13347-1* *3HAC025744-001*
Circuit diagram - IRB 6620	*3HAC025090-001*

Continues on next page

© Copyright 2014 - 2017 ABB. All rights reserved.

10.1 Circuit diagrams
Continued

Product	Article numbers for circuit diagrams
Circuit diagram - IRB 6620 / IRB 6620LX	*3HAC025090-001*
Circuit diagram - IRB 6640	*3HAC025744-001*
Circuit diagram - IRB 6650S	*3HAC13347-1* *3HAC025744-001*
Circuit diagram - IRB 6660	*3HAC025744-001* *3HAC029940-001*
Circuit diagram - IRB 6700	*3HAC043446-005*
Circuit diagram - IRB 7600	*3HAC13347-1* *3HAC025744-001*
Circuit diagram - IRB 14000	*3HAC050778-003*
Circuit diagram - IRB 910SC	*3HAC056159-002*

© Copyright 2014 - 2017 ABB. All rights reserved.

Index

A
Absolute Accuracy, calibration, 735
aluminum
  disposal, 788
ambient humidity
  operation, 65
  storage, 64
ambient temperature
  operation, 65
  storage, 64
assembly instructions, 55
axis-5 and axis-6 drive unit
  replacing, 711
axis-5 FPC unit
  replacing, 247
axis-5 motor
  replacing, 695
axis-5 timing belt
  replacing, 705
axis-4 FPC unit
  replacing, 216
axis-4 gear unit
  replacing, 626
axis-4 motor
  replacing, 669
axis-4 pulley
  replacing, 626
axis-4 shaft
  replacing, 626
axis-4 timing belt
  replacing, 680
axis-3
  radial sealing
    replacing, 374
  sealing ring
    replacing, 374
axis-3 drive unit
  replacing, 605
axis-3 gearbox
  replacing, 605
axis-3 motor
  replacing, 605
axis-2 drive unit
  replacing, 584
Axis Calibration, 742
  calibration tool
    article number, 745, 749
    examining, 745
    installation position, 747
  overview of method, 742
  procedure on FlexPendant, 749
  protective cover and protection plug, 747, 749

B
base
  replacing, 442
batteries
  disposal, 788
  handling, 52
battery
  replacing, 123
battery shutdown
  service routine, 123
brakes
  testing function, 34

C
cabinet lock, 22
cable package main
  replacing, 147
cabling, robot, 100
cabling between robot and controller, 100
calibrating
  robot, 742
  roughly, 739
calibrating robot, 742
calibration
  Absolute Accuracy type, 734
  rough, 739
  standard type, 734
  verification, 785
  when to calibrate, 736
calibration, Absolute Accuracy, 735
calibration manuals, 735
calibration marks, 737
calibration position
  jogging to, 786
  scales, 737
calibration scales, 737
CalibWare, 734
carbon dioxide extinguisher, 32
cast iron
  disposal, 788
cleaning, 133
climbing on robot, 23
connecting the robot and controller, cabling, 100
connection
  external safety devices, 19
copper
  disposal, 788

D
damage to mechanical stop, 115
danger levels, 39
dimensions
  robot, 91
direction of axes, 738
drive unit
  axis-3, 605
  axis-2, 584

E
EIB/SMB battery
  extension of lifetime, 123
  replacing, 123
EIB unit
  replacing, 259
enabling device, 36
environmental information, 788
equipment, robot, 91
equipment on robot, fitting, 92
ESD
  damage elimination, 50
  sensitive equipment, 50
  wrist strap connection point, 51
extra equipment, 91

F
fence dimensions, 31
fire extinguishing, 32
fitting

© Copyright 2014 - 2017 ABB. All rights reserved.

extra equipment, 92
fitting, equipment, 91
FlexPendant
jogging to calibration position, 786
MoveAbsJ instruction, 786
updating revolution counters, 739
foundation
requirements, 64
FPC unit
axis-5, 247
axis-4, 216

G
gearbox
axis-3, 605
axis-2, 584
gear unit
axis-4, 626
Gravity Alpha, 86
Gravity Beta, 85
grease
disposal, 788

H
hanging
installed hanging, 23
hazardous material, 788
height
installed at a height, 23
hold-to-run, 36
hot components
risk, 23
housing extender unit
replacing, 216
sealings, 216
humidity
operation, 65
storage, 64

I
information labels location, 110
inspecting
information labels, 110
mechanical stop, 115
robot cabling, 109
timing belts, 118
installation
equipment, 91
instructions for assembly, 55
intervals for maintenance, 107

L
labels
robot, 41
lamp unit
installing, 96
lifting
accessory, 77
lifting accessory, 807
Lithium
disposal, 788
loads on foundation, 63
lower arm
replacing, 275

M
main power
switching off, 49
main power connector, o-ring, 101
main power switch, 49
maintenance intervals, 107
maintenance schedule, 107
mechanical stop
axis-4, 411
axis-3, 408
axis-2, 405
axis-1, 580
mechanical stop location, 115
motor
axis-6, 711
axis-5, 695
axis-4, 669
axis-3, 605
motor unit
axis-2, 584
mounting, equipment, 91
MoveAbsJ instruction, 786

N
negative directions, axes, 738
neodymium
disposal, 788
NiCad
disposal, 788
nodular iron
disposal, 788

O
oil
disposal, 788
oil change
safety risks, 53
operating conditions, 65
option
signal lamp, 96
o-rings, enclosed with robot, 82, 101
o-rings, extra at delivery, 56

P
pedestal
installed on pedestal, 23
positive directions, axes, 738
product standards, 802
protection classes, 65
protection sleeve, base
replacing, 442
protection type, 65
protective equipment, 22
protective wear, 22
pulley
axis-5, 695

R
radial sealing
axis-4, replacing, 216
axis-2, replacing, 518
axis-1, replacing, 442
replacing
axis-5 and axis-6 drive unit, 711
axis-5 FPC unit, 247
axis-5 motor with pulley, 695
axis-5 pulley, 695
axis-5 timing belt, 705
axis-4 FPC unit, 216

© Copyright 2014 - 2017 ABB. All rights reserved.

axis-4 gear unit, 626
axis-4 motor, 669
axis-4 pulley, 626
axis-4 shaft, 626
axis-4 timing belt, 680
axis-3
radial sealing, 374
sealing ring, 374
axis-3 drive unit, 605
axis-3 gearbox, 605
axis-3 motor, 605
axis-2 drive unit, 584
axis-2 gearbox, 584
axis-2 motor unit, 584
base, 442
cable package main, 147
EIB unit, 259
housing extender unit, 216
lower arm, 275
mechanical stop
axis-4, 411
axis-3, 408
axis-2, 405
axis-1, 580
protection sleeve, base, 442
radial sealing, axis-4, 216
radial sealing, axis-2, 518
radial sealing, axis-1, 442
signal lamp, 339
SMB unit, 259
swing, 518
tubular, 342
UL-lamp, 339
requirements on foundation, 64
responsibility and validity, 19
revolution counters
storing on FlexPendant, 739
updating, 739
risk of tipping, 71
robot
dimensions, 91
equipment, fitting, 91
labels, 41
protection class, 65
protection types, 65
symbols, 41
robot cabling
inspecting, 109

S
safety
brake testing, 34
ESD, 50
fence dimensions, 31
fire extinguishing, 32
introduction, 17
moving robots, 47
reduced speed function, 35
release robot arm, 33
robot, 19
service, 19
signal lamp, 38
signals, 39
signals in manual, 39
symbols, 39
symbols on robot, 41
test run, 48
working range, 37
wrist strap, 51
safety equipment
signal lamp, 121
safety risk
electric parts, 29
hot parts, 25
hydraulic system, 27
installation, 22
oil change, 53
operational disturbance, 28
pneumatic system, 27
service work, 22
tools, 26
voltage, 29
work pieces, 26
safety signals
in manual, 39
safety standards, 802
safety zones, 23
scales on robot, 737
schedule of maintenance, 107
securing, robot, 81
signal lamp, 38
installing, 96
replacing, 339
signals
safety, 39
SMB unit
replacing, 259
stability, 71
stainless steel
disposal, 788
standards, 802
ANSI, 803
CAN, 803
EN, 802
EN IEC, 802
EN ISO, 802
steel
disposal, 788
storage conditions, 64
suspended mounting, 85
swing
replacing, 518
symbols
safety, 39
synchronization position, 739
sync marks, 737
system parameter
Gravity Alpha, 86
Gravity Beta, 85

T
temperatures
operation, 65
storage, 64
testing
brakes, 34
three-position enabling device, 36
tilted mounting, 85
timing belts
inspecting, 118
torques on foundation, 63
Transportation bracket, 59, 71, 73
tubular
replacing, 342

© Copyright 2014 - 2017 ABB. All rights reserved.

turning
accessory, 77
type A, 791
type B, 792

U
UL lamp
replacing, 339
updating revolution counters, 739

V
validity and responsibility, 19
verifying calibration, 785

W
wall mounting, 85
weight, 62
robot, 76, 807

Z
zero position
checking, 786

© Copyright 2014 - 2017 ABB. All rights reserved.

Contact us

ABB AB, Robotics
Robotics and Motion
S-721 68 VÄSTERÅS, Sweden
Telephone +46 (0) 21 344 400

ABB AS, Robotics
Robotics and Motion
Nordlysvegen 7, N-4340 BRYNE, Norway
Box 265, N-4349 BRYNE, Norway
Telephone: +47 22 87 2000

ABB Engineering (Shanghai) Ltd.
Robotics and Motion
No. 4528 Kangxin Highway
PuDong District
SHANGHAI 201319, China
Telephone: +86 21 6105 6666

ABB Inc.
Robotics and Motion
1250 Brown Road
Auburn Hills, MI 48326
USA
Telephone: +1 248 391 9000

www.abb.com/robotics

3HAC046983-001, Rev E, en