

Zebra TLP 2824 Plus™

Desktop Thermal Printer

User Guide

©2009 ZIH Corp. The copyrights in this manual and the software and/or firmware in the label printer described therein are owned by ZIH Corp. Unauthorized reproduction of this manual or the software and/or firmware in the label printer may result in imprisonment of up to one year and fines of up to $10,000 (17 U.S.C.506). Copyright violators may be subject to civil liability. All trademarks and registered trademarks are property of their respective owners. All rights reserved.

This product may contain ZPL®, ZPL II®, and ZebraLink™ programs; Element Energy Equalizer™ Circuit; E^3®; and Monotype Imaging fonts. Software ©ZIH corp. All rights reserved worldwide.

ZebraLink and all product names and numbers are trademarks, and Zebra, the Zebra logo, ZPL, ZPL II, Element Energy Equalizer circuit, and E3 Circuit are registered trademarks of ZIH Corp. All rights reserved worldwide.Monotype®, Intellifont® and UFST® are trademarks of Monotype Imaging, Inc. registered in the United States Patent and Trademark Office and may be registered in certain jurisdictions.

CG Triumvirate is a trademark of Monotype Imaging, Inc. and may be registered in some jurisdictions.

TrueType® is a trademark of Apple Computer, Inc. registered in the United States Patent and Trademark Office and may be registered in certancertain jurisdictions.

Proprietary Statement

This manual contains proprietary information of Zebra Technologies Corporation and its subsidiaries (“Zebra Technologies”). It is intended solely for the information and use of parties operating and maintaining the equipment described herein. Such proprietary information may not be used, reproduced, or disclosed to any other parties for any other purpose without the express written permission of Zebra Technologies.

Product Improvements

Continuous improvement of products is a policy of Zebra Technologies. All specifications and designs are subject to change without notice.

Liability Disclaimer

Zebra Technologies takes steps to ensure that its published Engineering specifications and manuals are correct; however, errors do occur. Zebra Technologies reserves the right to correct any such errors and disclaims liability resulting therefrom.

Limitation of Liability

In no event shall Zebra Technologies or anyone else involved in the creation, production, or delivery of the accompanying product (including hardware and software) be liable for any damages whatsoever (including, without limitation, consequential damages including loss of business profits, business interruption, or loss of business information) arising out of the use of, the results of use of, or inability to use such product, even if Zebra Technologies has been advised of the possibility of such damages. Some jurisdictions do not allow the exclusion or limitation of incidental or consequential damages, so the above limitation or exclusion may not apply to you.

Canadian DOC Compliance Statement

This Class B digital apparatus complies with Canadian ICES-003.
Cet appareil numérique de la classe B est conforme à la norme NMB-003 du Canada.

FCC Compliance Statement

This device complies with Part 15 rules. Operation is subject to the following two conditions:

1. This device may not cause harmful interference, and
2. This device must accept any interference received, including interference that may cause undesired operation.

This equipment has been tested and found to comply with the limits for Class B Digital Devices, pursuant to Part 15 of the FCC Rules. These limits are designed to provide reasonable protection against harmful interference when the equipment is operated in a residential environment. This equipment generates, uses, and can radiate radio frequency energy and, if not installed and used in accordance with the product manuals, may cause harmful interference to radio communications. However, there is no guarantee that interference will not occur in a particular installation. If this equipment does cause harmful interference to radio or television reception, the user is encouraged to do one or more of the following measures:

- Reorient or relocate the receiving antenna.
- Increase the separation between the equipment and receiver.
- Connect the equipment into an outlet on a circuit different from that to which the receiver is connected.
- Consult the dealer or an experienced RF service technician for help.

The user is cautioned that any changes or modifications not expressly approved by Zebra Technologies could void the user's authority to operate the equipment. To ensure compliance, this printer must be used with fully shielded communication cables.

Environmental Management



Do not dispose of this product in unsorted municipal waste. This product is recyclable, and should be recycled according to your local standards.

For more information, please see our website at:

Web address: www.zebra.com/environment



Notes •

About This Document

This section provides you with contact information, document structure and organization, and additional reference documents.

Contents

Who Should Use This Document vi
How This Document Is Organized vi
Document Conventions viii

Who Should Use This Document

This User Guide is intended for use by any person who needs to operate or to troubleshoot problems with the printer.

How This Document Is Organized

The User Guide is set up as follows:

Section	Description
Introduction on page 1	This section describes what you get in your shipping box and provides an overview of printer features. This section also has procedures that describe how to open and close the printer and report any problems.
Getting Started on page 11	This section describes how to set up your printer for the first time and use the most common operating procedures for loading media.
Print Operations on page 31	This section provides media and print handling, font and language support, and the set up of less common printer configurations.
Printer Options on page 45	This section covers the common printer options and accessories with brief descriptions and how to get you started using or configuring your printer option or accessory.
Maintenance on page 61	This section provides routine cleaning and maintenance procedures.
Troubleshooting on page 73	This section provides information about printer error reporting that you might need for printer troubleshooting. Assorted diagnostic tests are included.
Appendix on page 87	This section provides additional interface information and wiring diagrams to assist with printer to host system integration (typically a PC).

Contacts

Technical Support via the Internet is available 24 hours per day, 365 days per year.

Web Site: www.zebra.com

E-mail Back Technical Library:

- **E-mail address:** emb@zebra.com
- **Subject line:** Emaillist

Self Service Knowledge Base: www.zebra.com/knowledgebase

Online Case Registration: www.zebra.com/techrequest

Which Department Do You Need?	The Americas	Europe, Africa, Middle East, India	Asia Pacific
Regional Headquarters	Zebra Technologies International, LLC 333 Corporate Woods Parkway Vernon Hills, IL 60061-3109 U.S.A. T: +1 847 793 2600 Toll-free +1 800 423 0422 F: +1 847 913 8766	Zebra Technologies Europe Limited Dukes Meadow Millboard Road Bourne End Buckinghamshire, SL8 5XF United Kingdom T: +44 (0) 1628 556000 F: +44 (0) 1628 556001	Zebra Technologies Asia Pacific Pte. Ltd. 120 Robinson Road #06-01 Parakou Building Singapore 068913 T: + 65 6858 0722 F: +65 6885 0838
Technical Support For questions on the operation of Zebra equipment and software, please call your distributor. For additional assistance, contact us. *Please have your model and serial numbers available.*	T: +1 877 ASK ZEBRA (275 9327) F: +1 847 913 2578 Hardware: ts1@zebra.com Software: ts3@zebra.com	T: +44 (0) 1628 556039 F: +44 (0) 1628 556003 E: Tseurope@zebra.com	T: +65 6858 0722 F: +65 6885 0838 E: *China:* tschina@zebra.com *All other areas:* tsasiapacific@zebra.com
Repair Service Department For back-to-base service and repair.	T: +1 877 ASK ZEBRA (275 9327) F: +1 847 821 1797 E: repair@zebra.com To request a repair in the U.S., go to www.zebra.com/repair.	T: +44 (0) 1772 693069 F: +44 (0) 1772 693046 New requests: ukrma@zebra.com Status updates: repairupdate@zebra.com	T: +65 6858 0722 F: +65 6885 0838 E: *China:* tschina@zebra.com *All other areas:* tsasiapacific@zebra.com
Technical Training Department For Zebra product training courses.	T: +1 847 793 6868 T: +1 847 793 6864 F: +1 847 913 2578 E: ttamerica@zebra.com	T: +44 (0) 1628 556000 F: +44 (0) 1628 556001 E: Eurtraining@zebra.com	T: + 65 6858 0722 F: +65 6885 0838 E: *China:* tschina@zebra.com *All other areas:* tsasiapacific@zebra.com
Inquiry Department For product literature and distributor and dealer information.	T: +1 877 ASK ZEBRA (275 9327) E: inquiry4@zebra.com	T: +44 (0) 1628 556037 F: +44 (0) 1628 556005 E: mseurope@zebra.com	E: *China:* GCmarketing@zebra.com *All other areas:* APACChannelmarketing@zebra.com
Customer Service Department (US) ***Internal Sales Department (UK)*** For printers, parts, media, and ribbon, please call your distributor or contact us.	T: +1 877 ASK ZEBRA (275 9327) E: clientcare@zebra.com	T: +44 (0) 1628 556032 F: +44 (0) 1628 556001 E: cseurope@zebra.com	T: +65 6858 0722 F: +65 6885 0836 E: *China:* order-csr@zebra.com *All other areas:* csasiapacific@zebra.com

Key: T: Telephone
F: Facsimile
E: E-mail

Document Conventions

The following conventions are used throughout this document to convey certain information.

Alternate Color (online only) Cross-references contain hot links to other sections in this guide. If you are viewing this guide online in **.pdf** format, you can click the cross-reference (blue text) to jump directly to its location.

Command Line Examples Command line examples appear in `Courier New` font. For example, type `ZTools` to get to the Post-Install scripts in the `bin` directory.

Files and Directories File names and directories appear in `Courier New` font. For example, the `Zebra<version number>.tar` file and the `/root` directory.

Icons Used



Caution • Warns you of the potential for electrostatic discharge.



Caution • Warns you of a potential electric shock situation.



Caution • Warns you of a situation where excessive heat could cause a burn.



Caution • Warns you of a situation or area where a cut could occur.



Caution • Advises you that failure to take or avoid a specific action could result in physical harm to you.

Caution • (No icon) Advises you that failure to take or avoid a specific action could result in physical harm to the hardware.



Important • Advises you of information that is essential to complete a task.



Note • Indicates neutral or positive information that emphasizes or supplements important points of the main text.



Example • Provides an example, often a scenario, to better clarify a section of text.

Contents

About This Document v

Who Should Use This Document vi
How This Document Is Organized vi
Contacts vii
Document Conventions viii

1 • Introduction 1

TLP 2824 Plus™ Thermal Printers 2
What's in the Box? 3
Your Printer 4
Printer Features 5
Operator Controls 7
Printer Storage and Prolonged Inactivity 10

2 • Getting Started 11

Attaching Power 12
Loading Roll Media 13
Preparing Media 13
Placing the Roll in the Media Compartment 14
Loading Transfer Ribbon 19
Printing a Test (Printer Configuration) Label 23
Connecting the Printer to the Computer 24
Interface Cable Requirements 24
Installing Printer Drivers and Communicating with the Printer 30

3 • Print Operations 31

Determining Printer Configuration 32
Thermal Printing 32

Modes of Printing 33
Print Media Types 33
Determining Thermal Media Types 35
Replacing Supplies 35
Adding a New Transfer Ribbon 35
Replacing a Partially Used Transfer Ribbon 36
Adjusting the Print Width 36
Adjusting the Print Quality 36
Media Sensing 37
Ribbon Overview 38
When to Use Ribbon 38
Coated Side of Ribbon 38
Printing on Fan-Fold Media 40
Printing with Externally Mounted Roll Media 41
Print Meter 41
Fonts and Your Printer 42
Identifying Fonts in Your Printer 42
Localizing the Printer with Code Pages 43
Asian fonts and Other Large Font Sets 43
Getting Asian Fonts 43
Stand Alone Printing 44
Sending Files to the Printer 44

4 • Printer Options 45

Label Dispenser Option 46
Cutter Option 49
Loading Media with the Cutter Option 50
ZebraNet® 10/100 Internal (Wired) Print Server Option 54
Printer Network Configuration Status Label 55
RTC and Full Flash Memory Option 56
Asian Fonts - Printer Accessory 57
KDU — Printer Accessory 58
KDU Plus — Printer Accessory 59

5 • Maintenance 61

Cleaning 62
Cleaning the Printhead 63
Media Path Considerations 64
Platen Cleaning and Replacement 66
Other Printer Maintenance 67
Replacing the Printhead 68

6 • Troubleshooting 73
Status Light Descriptions 74
Status Light Error Resolutions 75
Print Quality Problems 77
Manual Calibration 80
Troubleshooting Tests 81
Printing a Configuration Label 81
Recalibration 81
Resetting the Factory Default Values 82
Communications Diagnostics 82
Feed Button Modes 84
Using the Printer's Reset Button 86

A • Appendix 87
Universal Serial Bus (USB) Interface 88
Parallel Interface 89
Ethernet Interface 90
Serial Port Interface 91



Notes •

1 Introduction

This section describes what you get in your shipping box and provides an overview of printer features. This includes procedures that describe how to open and close the printer and report any problems.

Contents

TLP 2824 Plus™ Thermal Printers 2
What's in the Box? 3
Unpack and Inspect the Printer 3
Your Printer 4
Printer Features 5
Operator Controls 7

TLP 2824 Plus™ Thermal Printers

The Zebra TLP 2824 Plus™ model is the best in class desktop thermal printer with the widest range of features. The TLP 2824 Plus™ printer provides thermal transfer and direct thermal printing at speeds up to 4 ips (inches per second) at a 203 dpi (dots per inch) print density, supports both ZPL and EPL Zebra printer programming languages and a variety of interface and feature options. The TLP 2824 Plus™ printer features:

- Automatic printer language detection and switching between ZPL and EPL programming and label formats.
- OpenAccess™ design for simplified media loading.
- Ultra compact printer footprint.
- Color-coded operator controls and media guides.
- Resident scalable font, supports font download, Unicode fonts and resident bitmap fonts.
- Improved printer performance with true 4 ips (inches per second) print speed and a 32-bit processor.
- Adaptive automatic serial port cable sensing and configuration for plug-and-play integration.
- Printhead test and maintenance reporting.
- Reset Button to set the printer to factory defaults while maintaining customer parameters.
- Backwards compatible with legacy Zebra 2824 printer models.

The TLP 2824 Plus™ printers offer a wide range of printer options:

- Label Dispense (Peel-Off)
- Internal 10/100 Print Server and Ethernet Interface
- General media cutter
- On-board RTC (Real Time Clock) and Full Flash memory
- Asian Language support with printer configuration options for the large Simplified and Traditional Chinese, Japanese, or Korean character sets.
- Zebra's ZBI 2 (Zebra BASIC Interpreter) programming language. ZBI allows you to create custom printer operations that can automate processes, use peripherals (i.e. scanners, scales, keyboards, Zebra KDU or KDU Plus, etc.) all without being attached to a PC or network.

This users guide provides all of the information you will need to operate your printer on a daily basis. To create label formats, refer to your programming guides or label design applications such as Zebra Designer.

Your printer, when connected to a host computer, functions as a complete system for printing labels and tags.

Note • Many printer settings may also be controlled by your printer's driver or label design software. Refer to the driver or software documentation for more information.

What's in the Box?

Save the carton and all packing materials in case you need to ship or store the printer later. After unpacking, make sure you have all parts. Follow the procedures for inspecting the printer to familiarize yourself with printer parts so you can follow the instructions in this book.

Unpack and Inspect the Printer

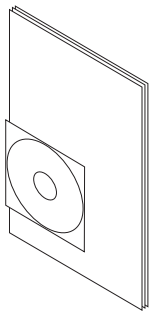

Documentation and Software

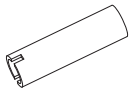

Ribbon Core

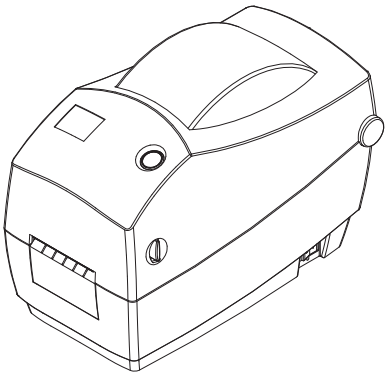

Printer

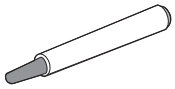

Cleaning Pen

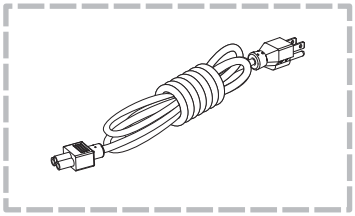

Power Cord
varies by locale or region

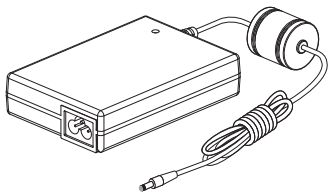

Power Supply

When you receive the printer, immediately unpack it and inspect for shipping damage.

- Save all packing materials.
- Check all exterior surfaces for damage.
- Open the printer and inspect the media compartment for damage to components.

If you discover shipping damage upon inspection:

- Immediately notify the shipping company and file a damage report. Zebra Technologies Corporation is not responsible for any damage incurred during shipment of the printer and will not cover the repair of this damage under its warranty policy.
- Keep all packaging material for shipping company inspection.
- Notify your authorized Zebra reseller

Your Printer

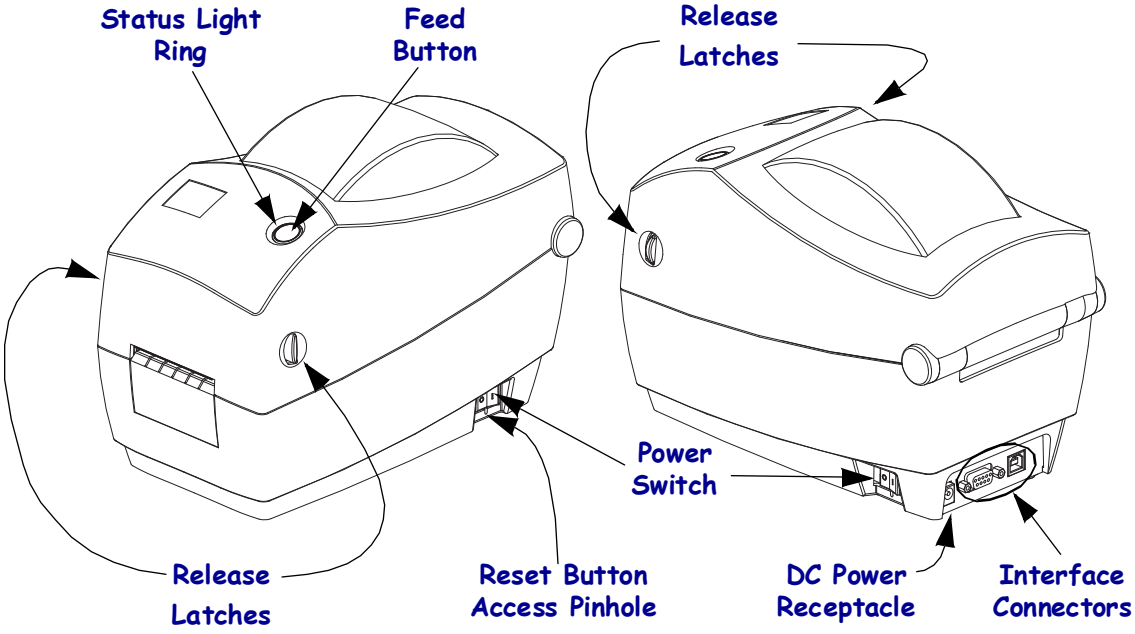

Opening the printer

To access the media compartment, you must open the printer. Pull the release latches towards you and lift the cover. Check the media compartment for loose or damaged components.

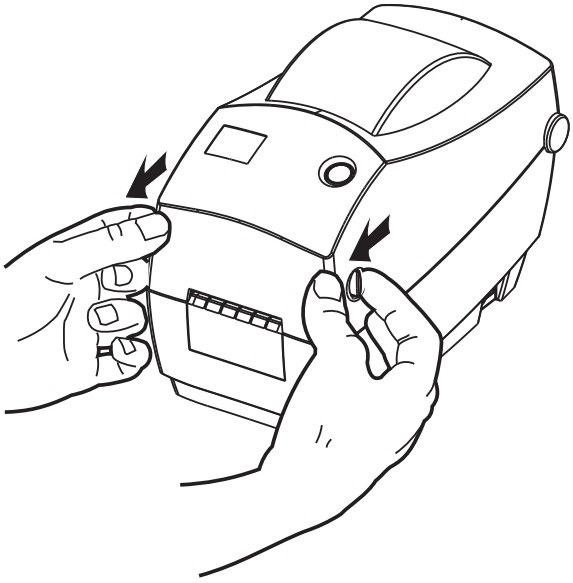

Caution • The discharge of electrostatic energy that accumulates on the surface of the human body or other surfaces can damage or destroy the printhead or electronic components used in this device. You must observe static-safe procedures when working with the printhead or the electronic components under the top cover.

Printer Features

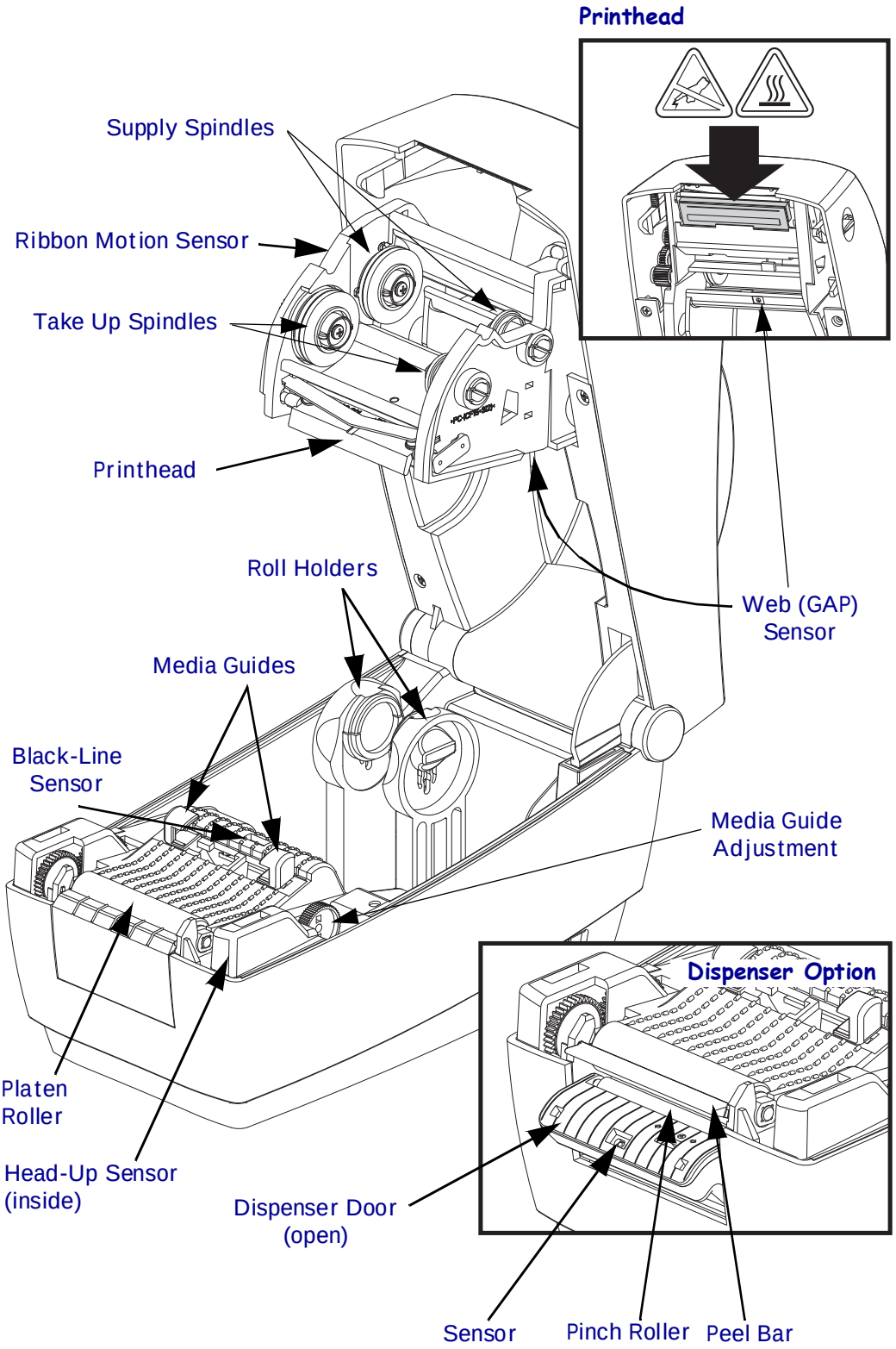

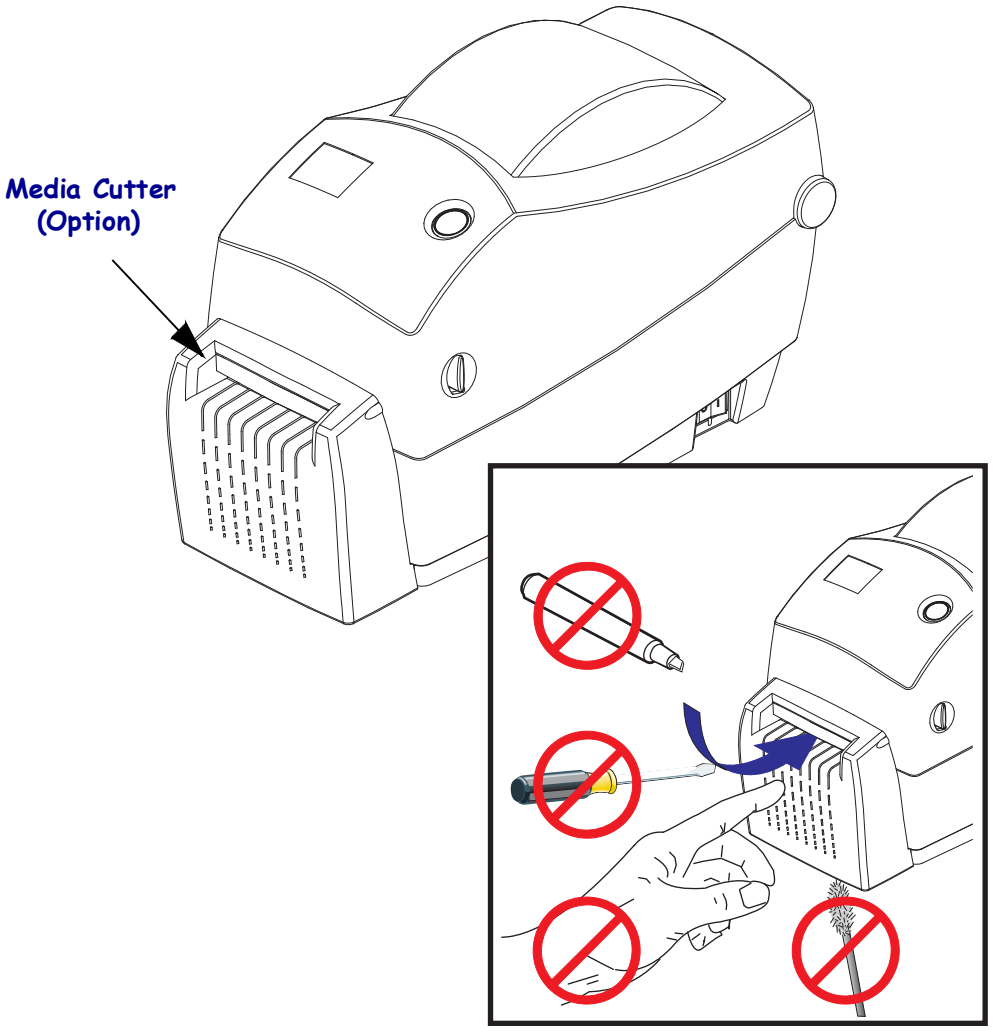
Media Cutter
(Option)

Operator Controls

Power Switch

Press the *rear* of the switch to turn **ON** or *front* of the switch to turn **OFF** the printer.

Caution • The printer power should be turned off before connecting or disconnecting the communications and power cables.

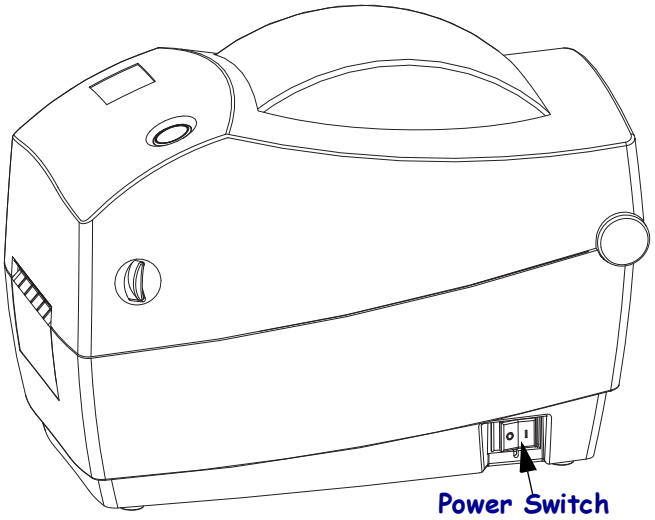





Reset Button (hidden)

Use a opened paper clip as a probe to press the hidden reset button below the power switch. See *Using the Printer's Reset Button* on page 86 for details on this multi-function feature.





Caution • Do NOT reset the printer power during defragmentation (status light indicator flashing Red-Amber-Green). Doing so can damage the printer.

Feed Button

- Tap the Feed button once to force the printer to feed one blank label.
- Press the Feed button to take the printer out of a "pause" condition. The printer is put into "pause" by either a programming command or an error condition. See *What the Status Light is Telling You* on page 74 in the Troubleshooting chapter.
- Use the Feed button for printer setup and status (see *Feed Button Modes* on page 84 in the Troubleshooting chapter).

Status Light

Located on the top case next to the feed button, the status light functions as a printer operational indicator (see *Status Light Descriptions* on page 74).

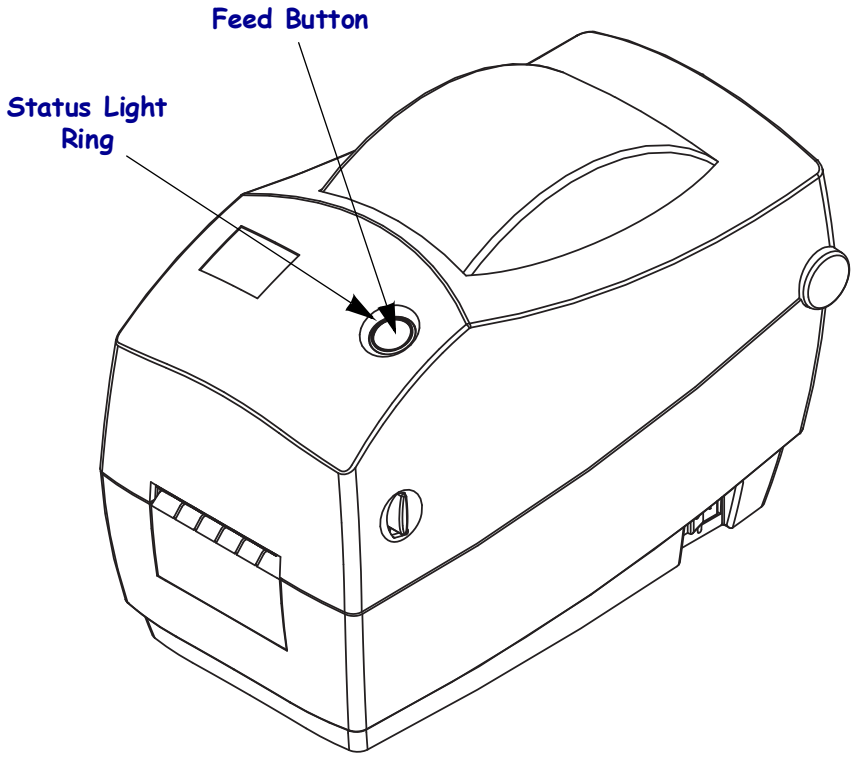

Closing the printer

1. To lower the top cover, first press the top cover's latching stand towards the center of the printer. Gently swing the top cover down onto the printer's base.

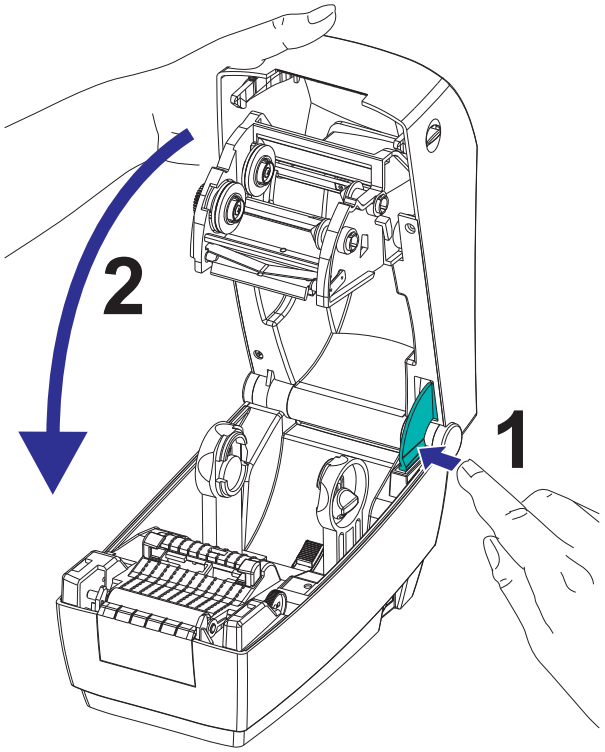

2. Press down on both sides until the cover snaps closed, typically with an audible sound.

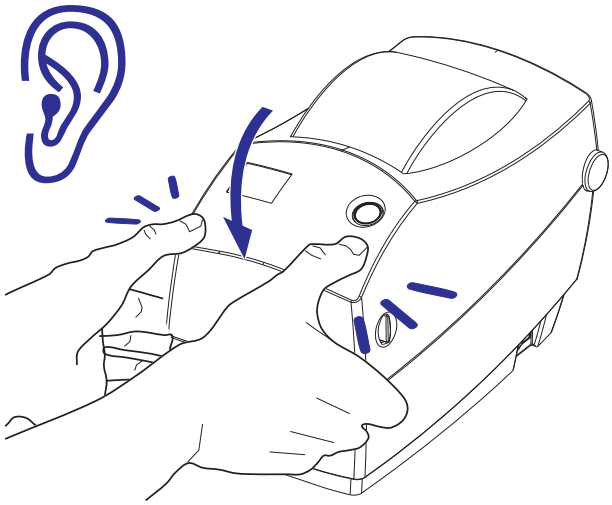

Printer Storage and Prolonged Inactivity

- If you are not placing the printer into immediate operation, repackage it using the original packing materials.
  - Storage Temperature Range: –40° to 60°C (–40°F to 140°F)
  - Storage Humidity Range: 5% to 95% non-condensing

- When storing the printer or if the printer is going to be inactive for more than a day, please place a label on the platen (drive) roller before closing the printer. This keeps the printhead from sticking onto the platen roller.

- When removing the printer from storage or after transportation, allow the printer to adjust to the ambient environment's temperature and humidity conditions.
  - Operating Temperature Range: –5° to 40°C (23°F to 104°F)
  - Operating Humidity Range: 10% to 90% non-condensing

2

Getting Started

This section describes how to set up your printer for the first time and use the most common operating procedures for loading media.

Contents

Attaching Power 12
Loading Roll Media 13
Loading Transfer Ribbon 19
Printing a Test (Printer Configuration) Label 23
Connecting the Printer to the Computer. 24

Attaching Power

Important • Set up your printer so that you can handle the power cord easily if needed. To make certain the printer cannot carry electrical current, you must separate the power cord from the power supply receptacle or AC electrical outlet.

Caution • Never operate the printer and power supply in an area where they can get wet. Serious personal injury could result!

1. Make sure the printer's power switch is in the OFF position (0).
2. Insert the AC power cord into the power supply.
3. Plug the other end of the cord into an appropriate AC electrical outlet. Note: The active power light will go on if power is on at the AC outlet.
4. Insert the power supply's power connector into the printer's power receptacle.

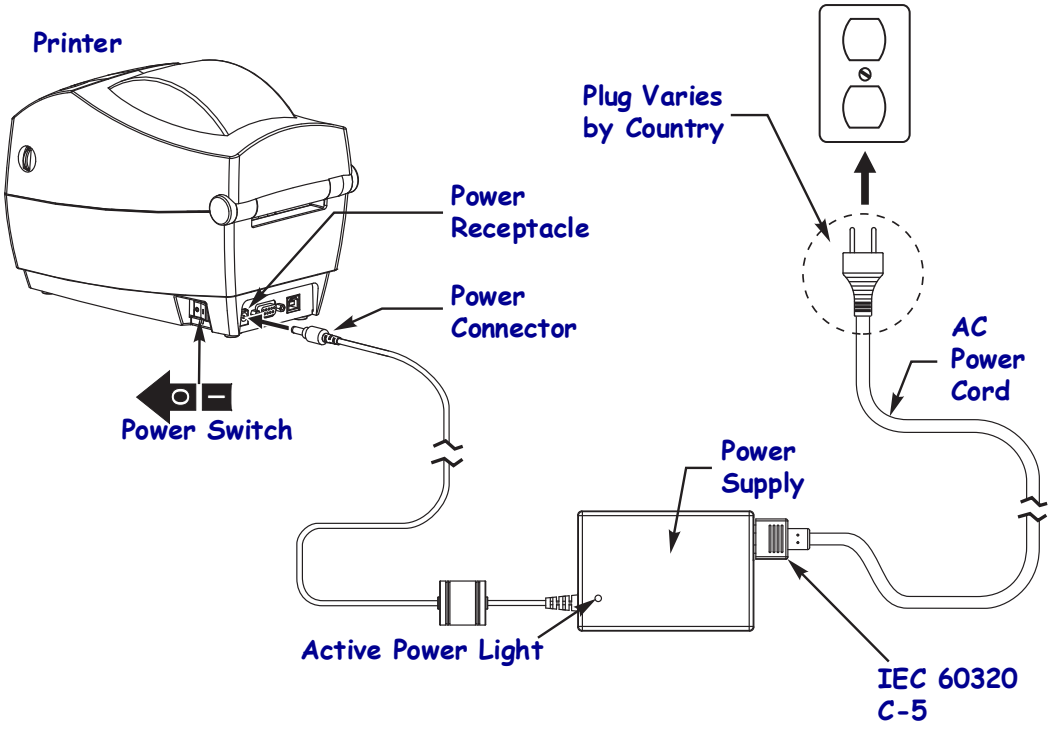

Note • Ensure the appropriate power cord with a three (3) prong plug and an IEC 60320-C5 connector are used at all times. These power cords must bear the relevant certification mark of the country in which the product is being used.

Loading Roll Media

When you load media, you must place the roll onto the media hangers.

You must use the correct media for the type of printing you require.

Preparing Media

Whether your roll media is inside or outside wound, you load it into the printer the same way.

- Remove the outside length of media. During shipment, handling, or storage, the roll may become dirty or dusty. Removing the outside length of media avoids dragging adhesive or dirty media between the printhead and platen.

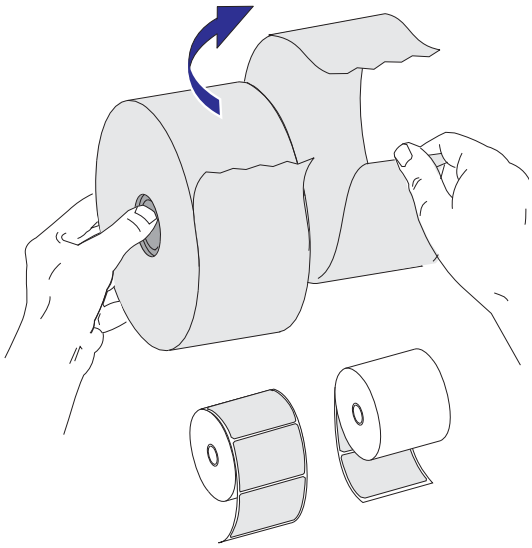

Placing the Roll in the Media Compartment

1. Open the printer. Remember that you need to pull the release latch levers toward the front of the printer.
2. Check the core of the media roll and adjust the roll holder's slide adjustment, if necessary.

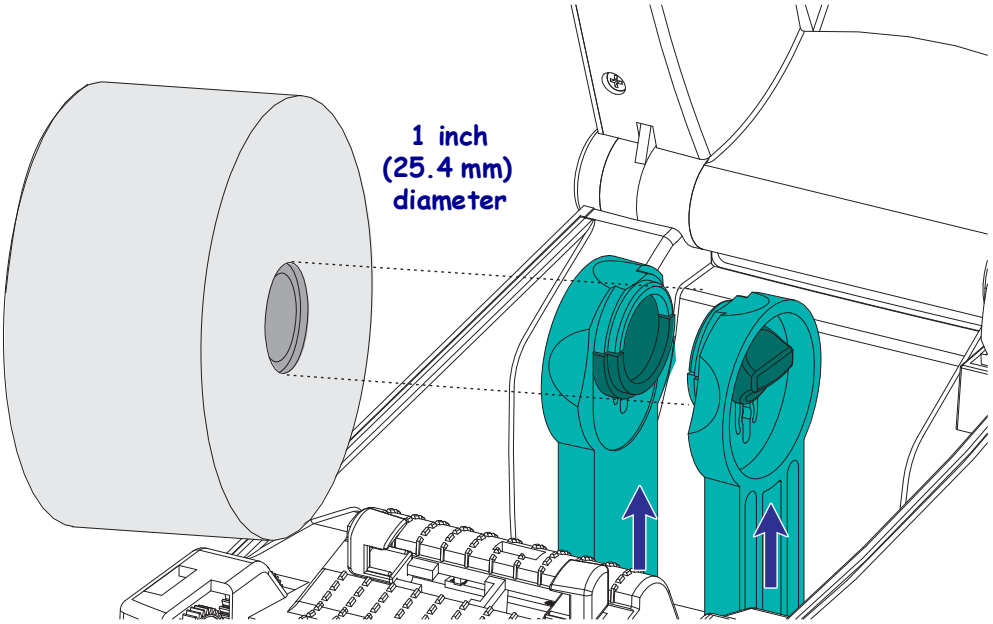

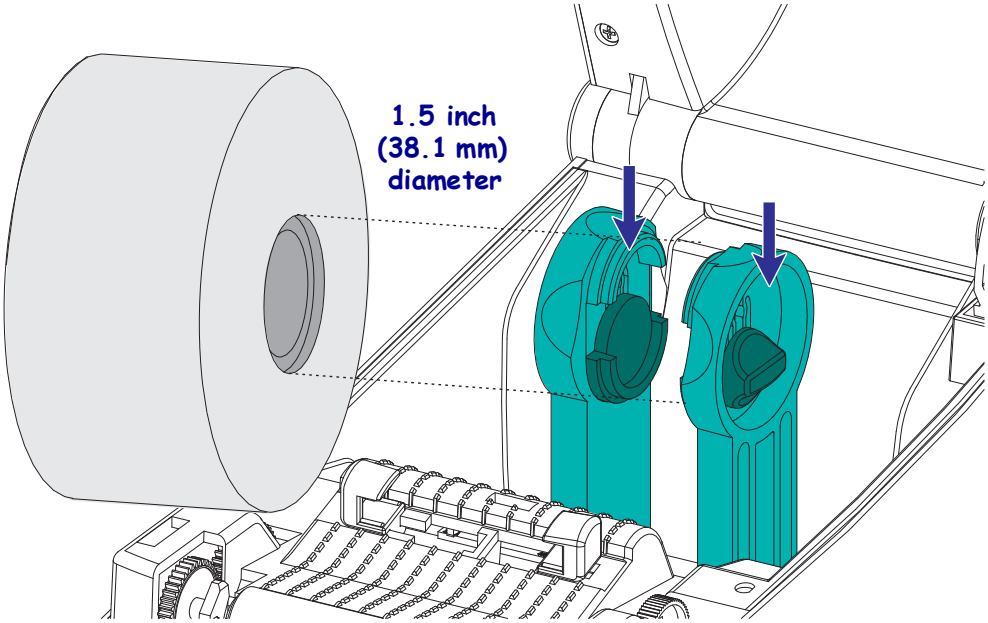

3. Open the media guides wider than the media width. Turn the media guide's thumb wheel towards the rear of the printer to open the guides wider.

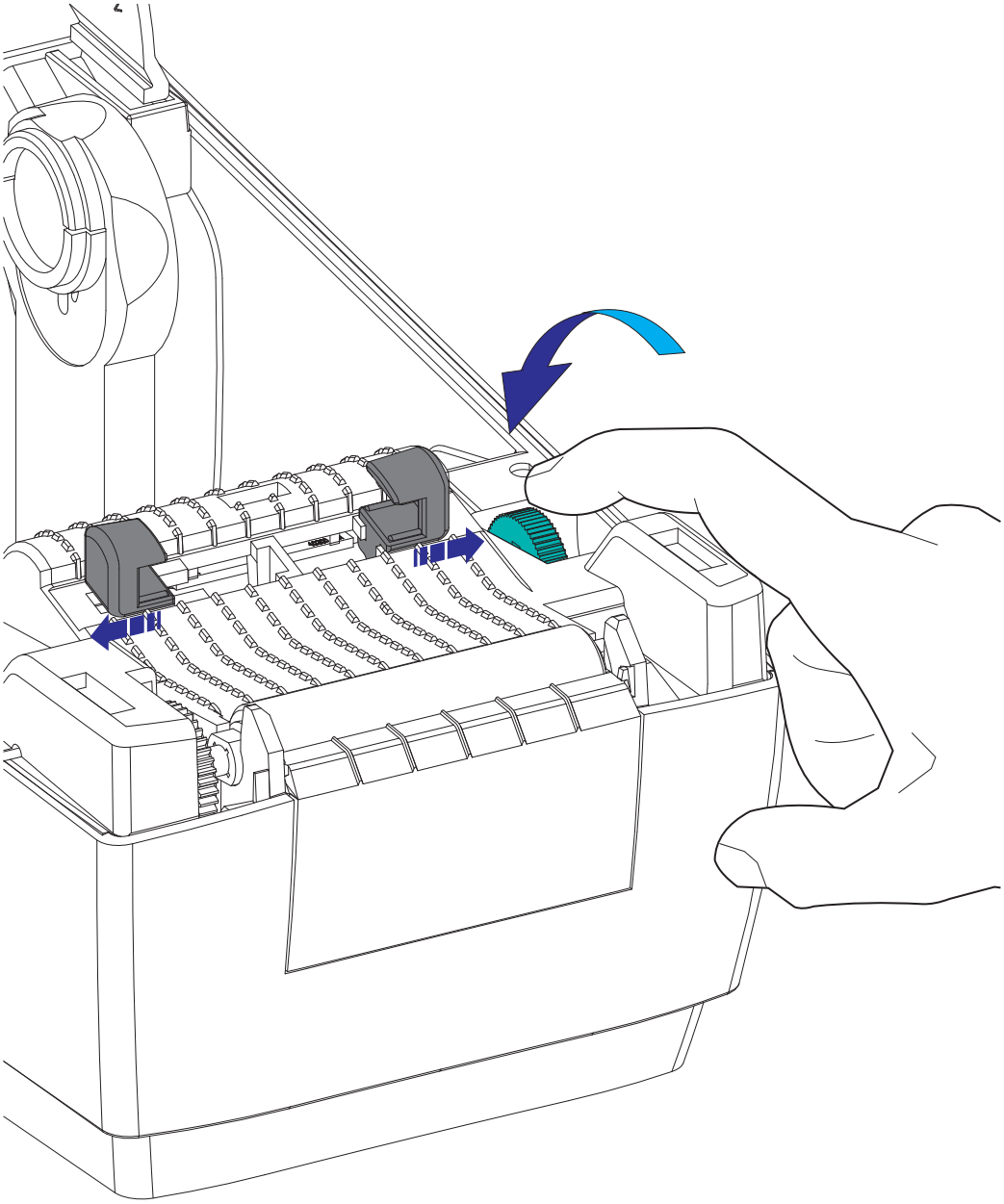

4. Open the media roll holders. Pull the media guides open with your free hand and place the media roll on the roll holders and release the guides. Orient the media roll so that its printing surface will face up as it passes over the platen (drive) roller.

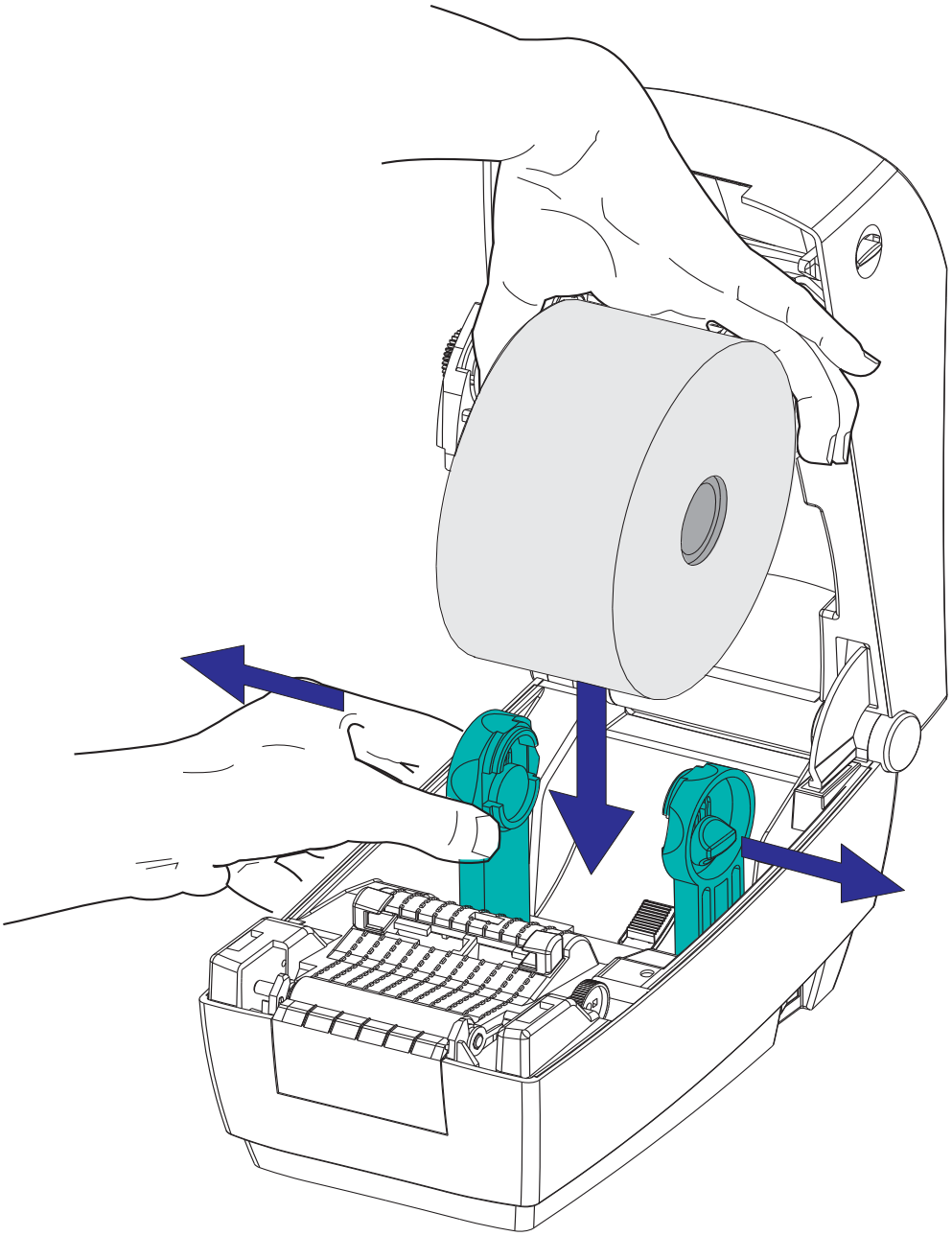

5. Pull the media so that it extends out of the front of the printer. Verify the roll turns freely. The roll must not sit in the bottom of the media compartment. Verify that media's printing surface is facing up.

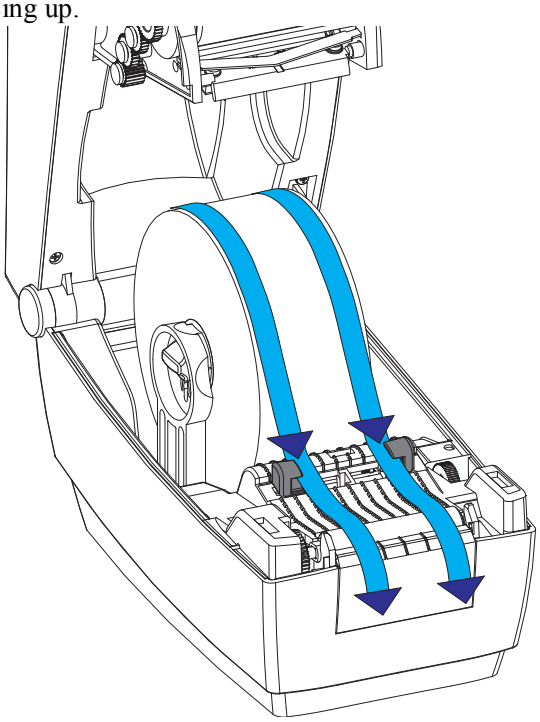

6. Push the media under both of the media guides.

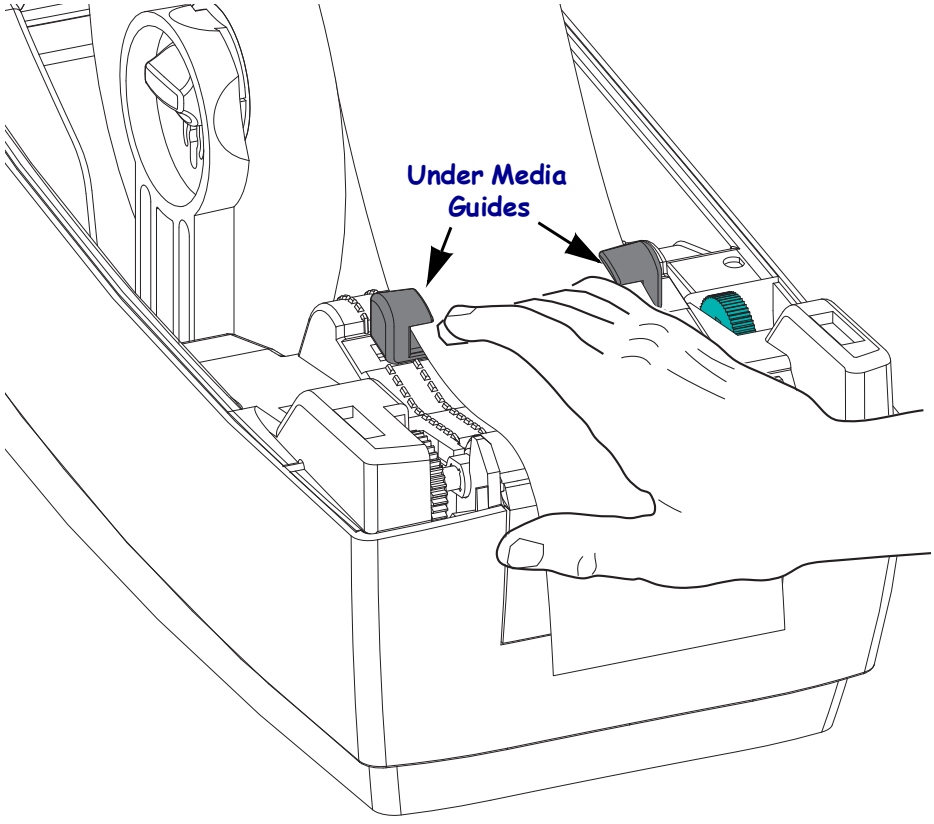

7. Adjust the media guides so that the both sides of the media are just touching the inside of the guides. Turn the media guide's thumb wheel towards the front of the printer to made the guides tighter (narrower).

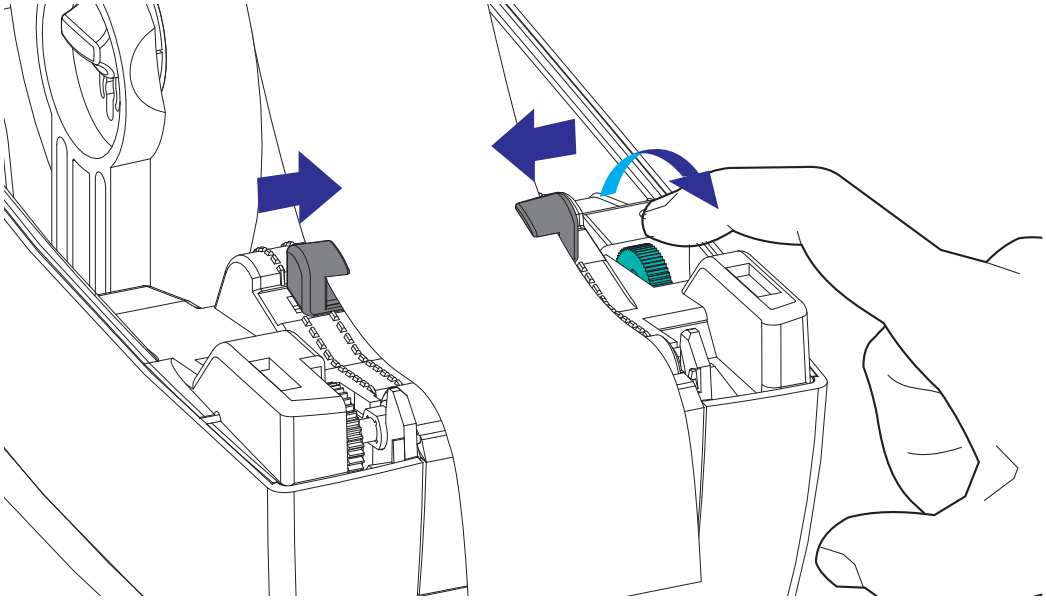

8. Close the printer. To lower the top cover, first press the top cover's latching stand towards the center of the printer. Gently swing the top cover down onto the printer's base. Press down on both sides until the cover snaps closed, typically with an audible sound.

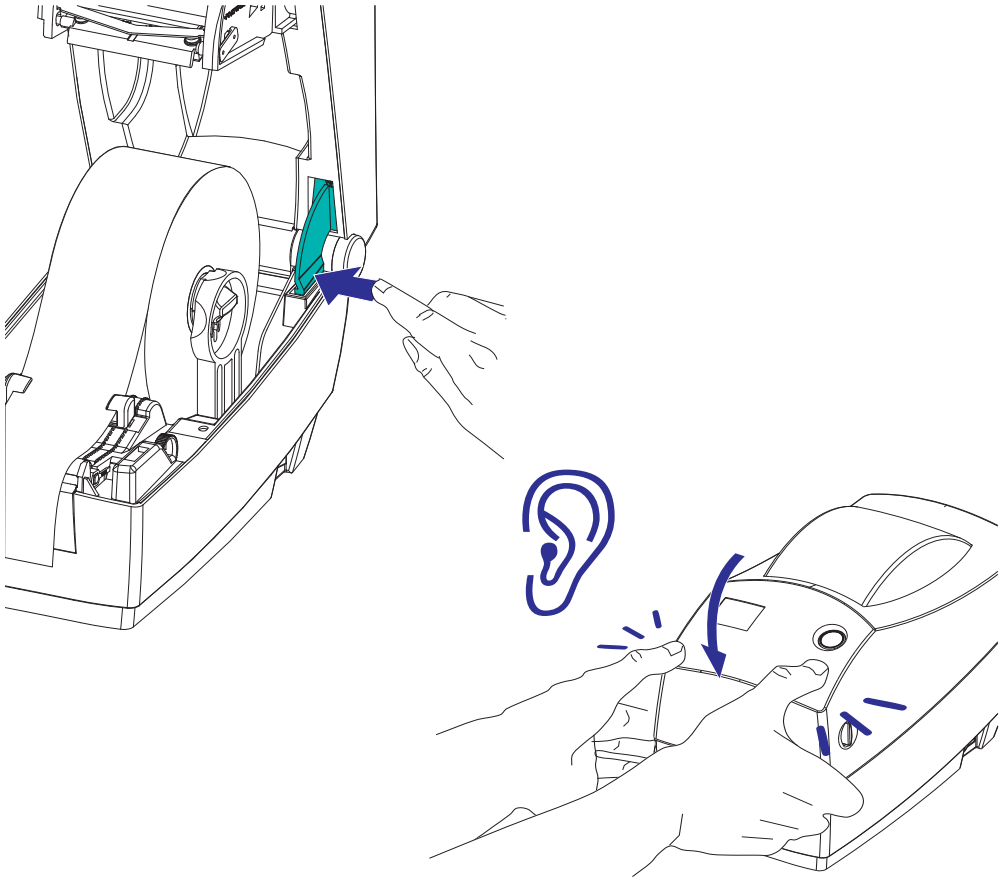

Loading Transfer Ribbon

Transfer ribbons come in several varieties and in some cases colors to match your application needs. Zebra brand transfer ribbons are specifically designed for your printer and Zebra brand media. Using non-Zebra brand or media or ribbon not approved for use in your Zebra printer may damage your printer or printhead.

- The media and ribbon types should be matched to provide you with optimal print results.
- Always use ribbon that is wider than the media to protect the printhead from wear.
- For direct thermal printing, do not load ribbon in the printer.

Before following these steps, prepare the ribbon by removing its wrapping and pulling its adhesive strip free.

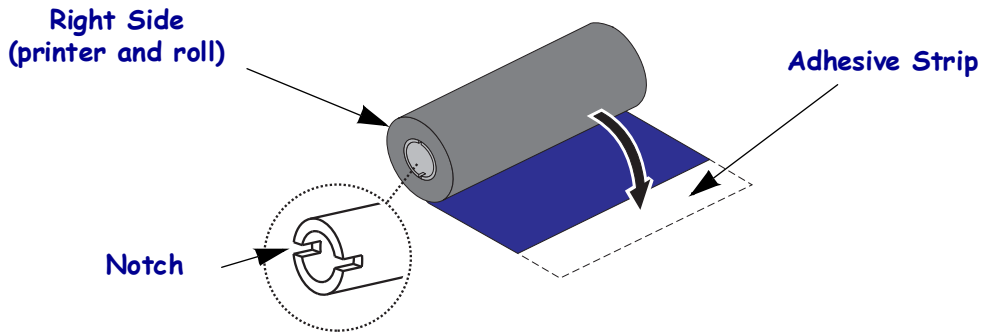

See *Ribbon Overview* on page 38 for more information on ribbon use.

Note • DO NOT USE ribbon cores with damaged notches - rounded, frayed, smashed, etc. The core notches should be square to lock the core on the spindle or the core may slip causing ribbon wrinkle, poor end of ribbon sensing or other intermittent failures.

1. With the printer open, thread the ribbon through the hole beneath the supply spindles.

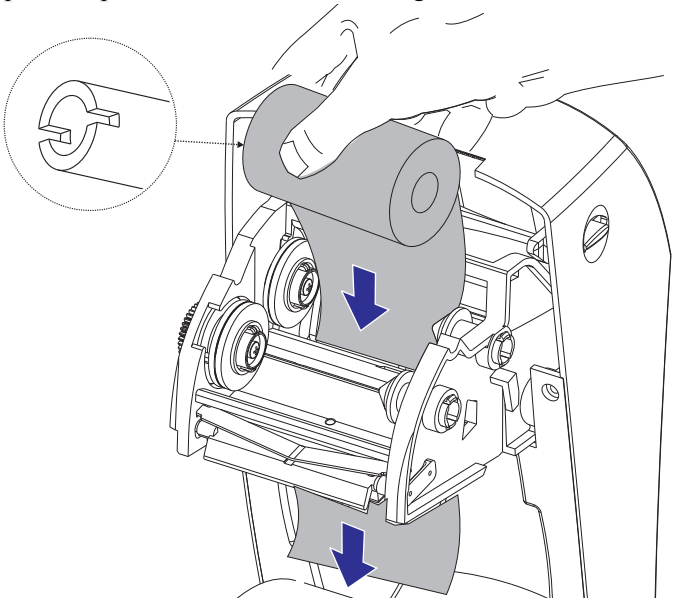

2. First slide the ribbon roll onto the right hand supply spindle. Push the right spindle in and swing the left side of the ribbon roll onto the left side ribbon spindle. Rotate the ribbon roll on the left spindle till it locks the ribbon roll's core notches onto the spindle.

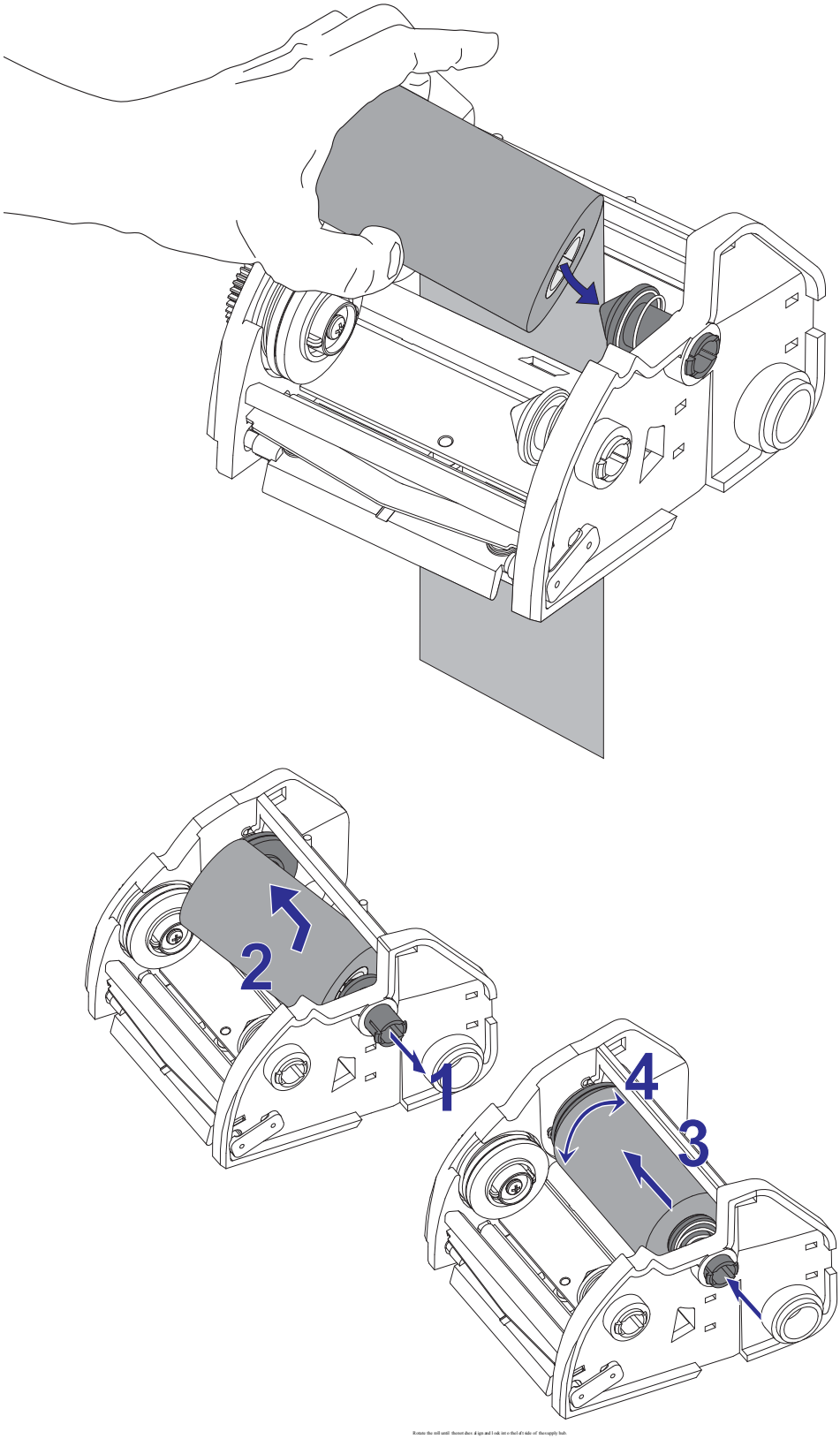

3. Place an empty ribbon core on printer's take-up spindles. Rotate the ribbon core until the notches align and lock into the left side of the take-up hub.

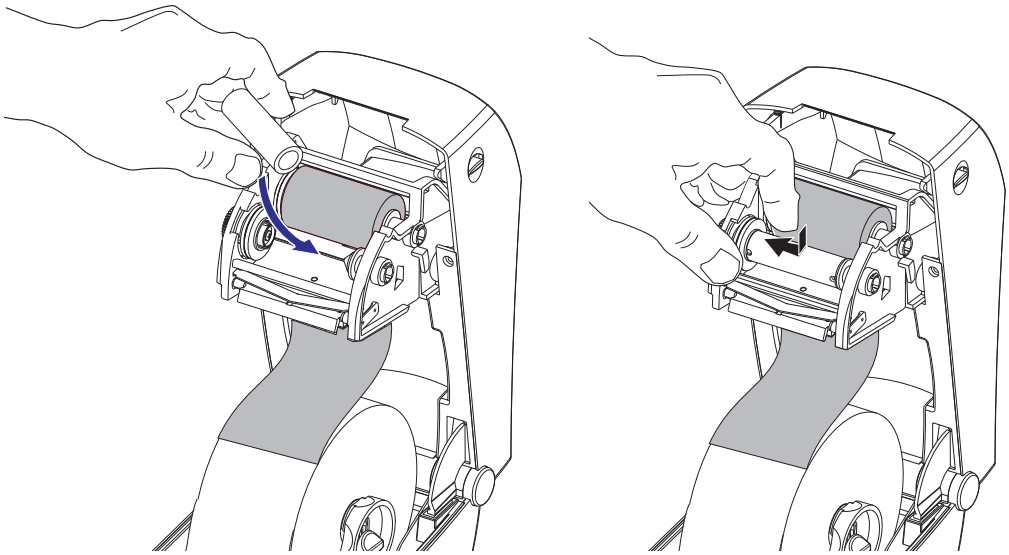

You can find your first ribbon take-up core in the packing box. Subsequently, use the empty supply core to take up the next roll of ribbon.

4. Pull the transfer ribbon's leader around from below the ribbon frame. Attach it with the adhesive strip on the leader to the empty ribbon core on the supply spindle. Center the ribbon on the ribbon core.

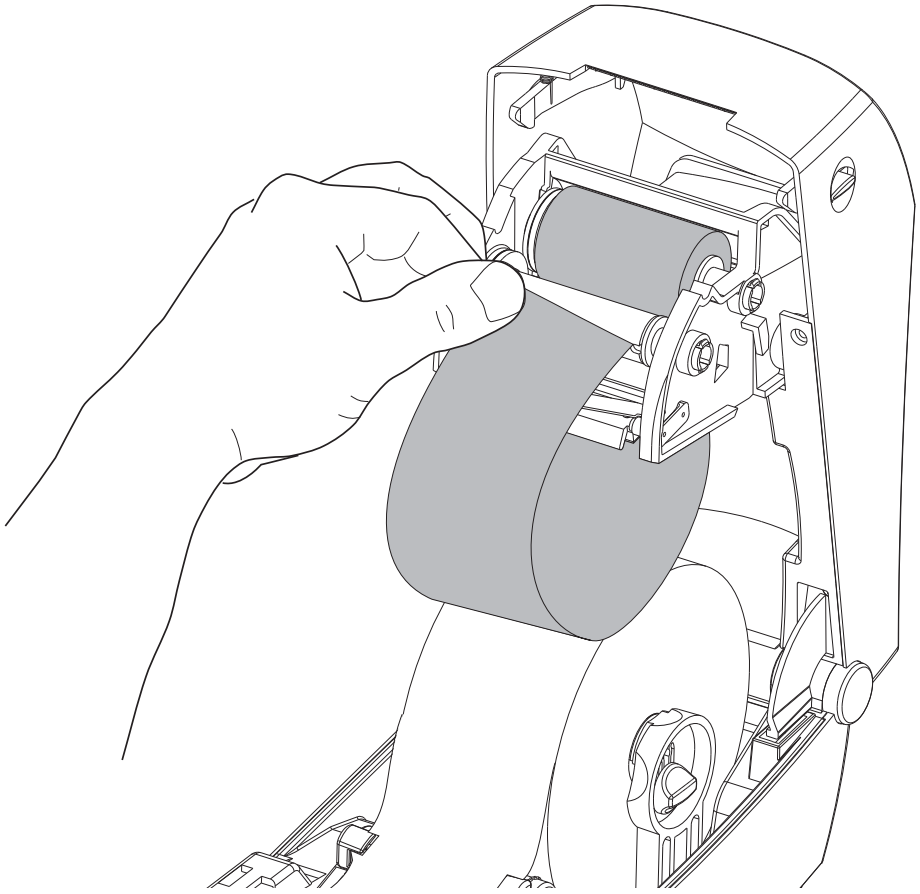

5. Rotate the thumb wheel on the left side of the ribbon frame by the supply spindle until the ribbon is pulled tight across the printhead.

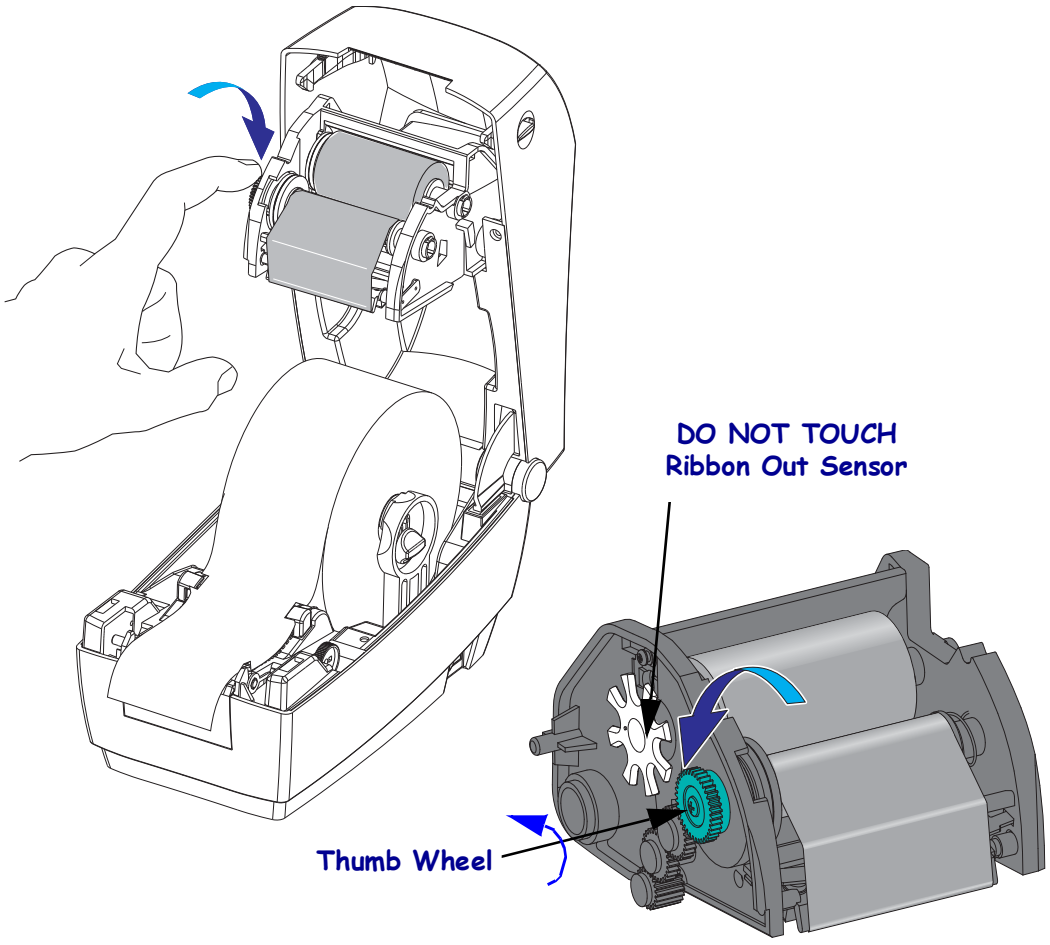

6. Verify that the media is loaded and ready to print and then close the printer cover.

7. Press the Feed button to have the printer feed a minimum of 10 cm (4 inches) of media to remove slack and ribbon wrinkle, and to align the ribbon on the spindles.

8. Change the print mode setting from direct thermal printing to thermal transfer to set the printer's temperature profiles for thermal transfer media. This can be done with the printer driver, application software, or printer programming commands.

   - When controlling printer operations with ZPL programming, refer to the Media Type (**^MT**) ZPL II command (follow the instructions in the *ZPL Programming Guide*).
   - When controlling printer operations with EPL Page Mode, refer to the Options (**O**) EPL2 command (follow the instructions in the *EPL2 Programmer's Guide*).

   Your printer is now ready to print.

Printing a Test (Printer Configuration) Label

Before you connect the printer to your computer, make sure that the printer is in proper working order.

You can do this by printing a configuration label.

1. Make sure the media is properly loaded and the top cover of the printer is closed. Then, turn the printer power on if you have not already done so. If the printer initializes with the status light blinking green (pause mode), press the Feed button once to set the printer in Ready (to print) mode. See the *Troubleshooting* on page 73 if the printer's status light does not turn solid green (Ready).

2. Press the Feed button two to three times to allow the printer to calibrate the printer for the installed media. The printer may feed several labels during this process.

3. When the status light is solid green, press and hold the Feed button until the status light flashes once.

4. Release the Feed button. A configuration label will print.

   If you cannot get this label to print, refer to *Getting Started* on page 11.

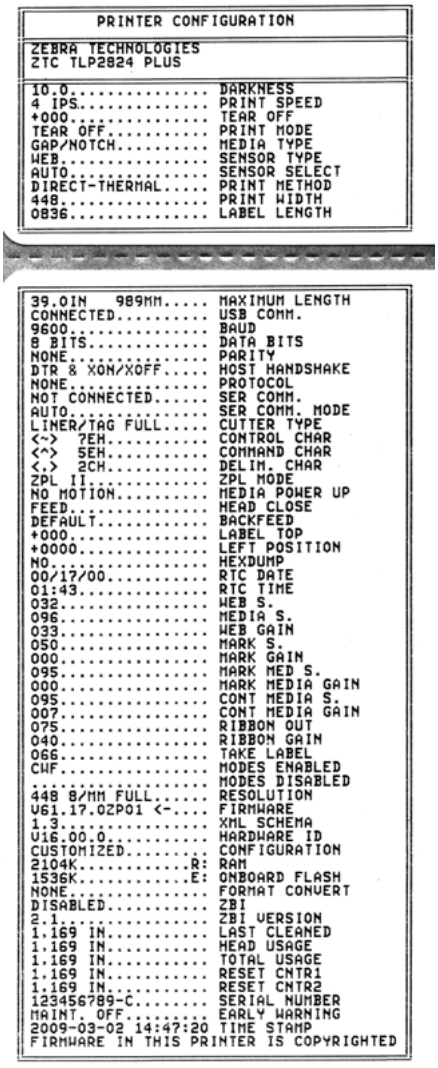

Connecting the Printer to the Computer

The Zebra 2824 Plus printers support a variety of interface options and configurations. These include: Universal Serial Bus (USB) interface, RS232 Serial, Parallel (IEEE 1284.4) and 10/100 Ethernet.



Caution • Keep the power switch in the OFF position when attaching the interface cable. The power cord must be inserted into the power supply and the power receptacle on the back of the printer before connecting or disconnecting the communications cables.



Important • This printer complies with FCC "Rules and Regulations," Part 15, for Class B Equipment, using fully shielded data cables. Use of un-shielded cables may increase radiated emissions above the Class B limits.

Interface Cable Requirements

Data cables must be of fully shielded construction and fitted with metal or metallized connector shells. Shielded cables and connectors are required to prevent radiation and reception of electrical noise.

To minimize electrical noise pickup in the cable:

- Keep data cables as short as possible (6 foot [1.83 m] recommended).
- Do not tightly bundle the data cables with power cords.
- Do not tie the data cables to power wire conduits.

USB Interface Requirements

Universal Serial Bus (version 2.0 compliant) provides a fast interface that is compatible with your existing PC hardware. USB's "plug and play" design makes installation easy. Multiple printers can share a single USB port/hub.

When using a USB cable (not supplied with your printer), verify that the cable or cable packaging bears the "Certified USB™" mark (see below) to guarantee USB 2.0 compliance.

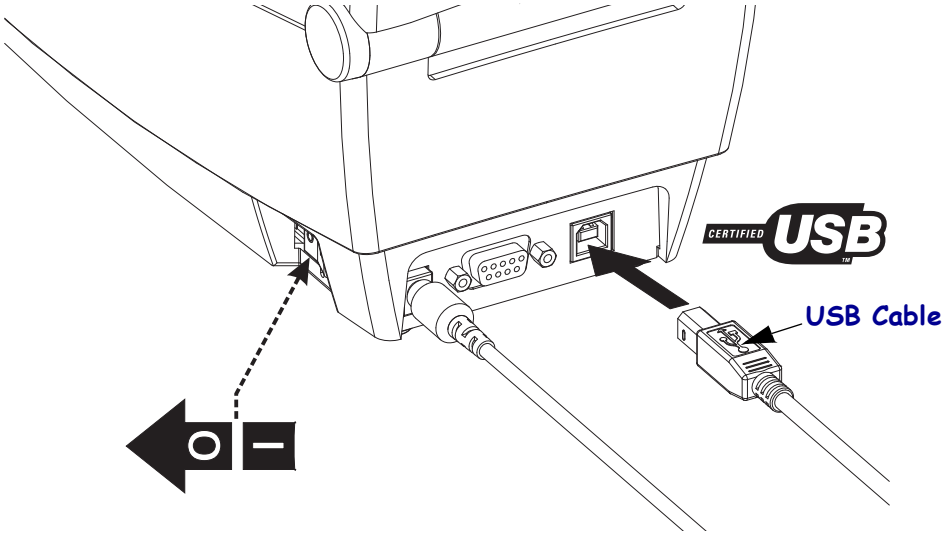

Serial Communications

The required cable must have a nine-pin “D” type (DB-9P) male connector on one end, which is plugged into the mating (DB-9S) serial port located on the back of the printer. The other end of this signal interface cable connects to a serial port at the host computer. The 2824 Plus printer is configured from the factory to automatically detect and switch the serial port communications to match common serial port cabling and signal connection configurations: DTE and DCE. This allows the use of either common serial port interface cables. A common cable is a Null Modem (cross-over) cable and is the standard cable for Zebra printers. Early models of Zebra printers running the EPL programming typically utilized a straight through signal connections cable (no cross-over). For pinout information, refer to Appendix A.

The serial port communication settings between the printer and host (typically a PC) must match for reliable communication. The Bits per second (or Baud rate) and Flow control are the most common settings that get changed. The hosts (typically a Windows PC) needs to have the data Flow control changed to match the printer’s default communication method: **Hardware** and is noted by the Host Handshake setting **`DTR/Xon/Xoff`**. This combined hardware (DTR) and software (Xon/Xoff) mode may need to change depending upon the non-Zebra application software and the serial cable variation in use.

Serial communications between the printer and the host computer can be set by:

- Autobaud synchronization
- ZPL programming: **`^SC`** command
- EPL programming: **`Y`** command
- Set Get Do (SGD) programming: **`comm.type`**
- Resetting the printer to its default printer configuration.

Autobaud

Autobaud synchronization allows the printer to automatically match the communication parameters of the host computer. To autobaud:

1. Press and hold the feed button until the green status LED flashes once, twice, and then three times.
2. While the status LED flashes, send the **`^XA^XZ`** command sequence to the printer.
3. When the printer and host are synchronized, the LED changes to solid green. (No labels will print during autobaud synchronization.)

ZPL ^SC Command

Use the Set Communications (**`^SC`**) command to change the communications settings on the printer.

1. With the host computer set at the same communications settings as the printer, send the **`^SC`** command to change the printer to the desired settings.
2. Change the host computer settings to match the new printer settings.

Refer to the *ZPL Programming Guide* for more information about this command.

EPL `Y` Command

Use the serial port setup (**`Y`**) command to change the communications settings on the printer.

1. With the host computer set at the same communications settings as the printer, send the **`Y`** command to change the printer to the desired settings. Note: the Y command does not support setting the data flow control, use the **`Xon/Xoff`** setting.
2. Change the host computer settings to match the new printer settings.

Refer to the *EPL Page Mode Programming Guide* for more information about this command.

Set Get DO `comm.type` Command

This SGD command controls how serial port cabling variations can be handled by the printer. The printer will by default, be in the 'Auto-detect' mode allowing the printer to detect and change between DTE and DCE cable wiring configurations automatically.

1. Send the printer a SGD command: **`!U1 setvar "comm.type" "value"`** where "value" is "auto", "dte", or "dce".

Resetting the Default Serial Port Parameters

Do the following to reset the communications parameters on the printer to the factory defaults (serial communication settings are: 1) Auto-detect (cable configuration) and 2) **`9600`** baud, **`8`** bit word length, **`NO`** parity, **`1`** stop bit, and **`DTR/XON/XOFF`** data flow control).

1. Press and hold the feed button until the green status LED flashes once, waits a moment and flashes twice, and then waits again before flashing three times (release immediately).
2. While the status LED rapidly flashes amber and green, press the feed button.

Once the printer has finished resetting the defaults, the serial communications between the printer and the host computer can be set by the ZPL **`^SC`** command or the EPL **`Y`** command.

Note • Early models of Zebra printers running the EPL programming language had **`9600`** baud, **`NO`** parity, **`8`** data bits, **`1`** stop bit and a **`HARDWARE`** and **`SOFTWARE`** (merged) data control (essentially DTR/Xon/Xoff) as the default serial port settings. The Windows operating system flow control setting was Hardware for most applications.

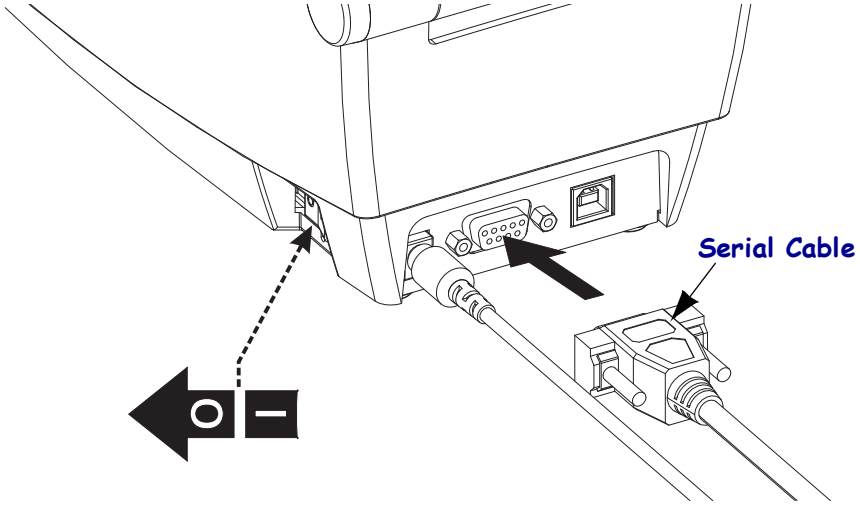

Parallel Port

The required cable must have a twenty-five pin “D” type (DB-25P) male connector and a “Centronics” on the printer connector (IEEE 1284 A-C parallel interface specification). Tighten the cable connector’s screw locks to secure the cable to the printer and computer.
Note • The printer design does not allow for the use non-molded cables such as hand-made cables with clam shell connector covers.

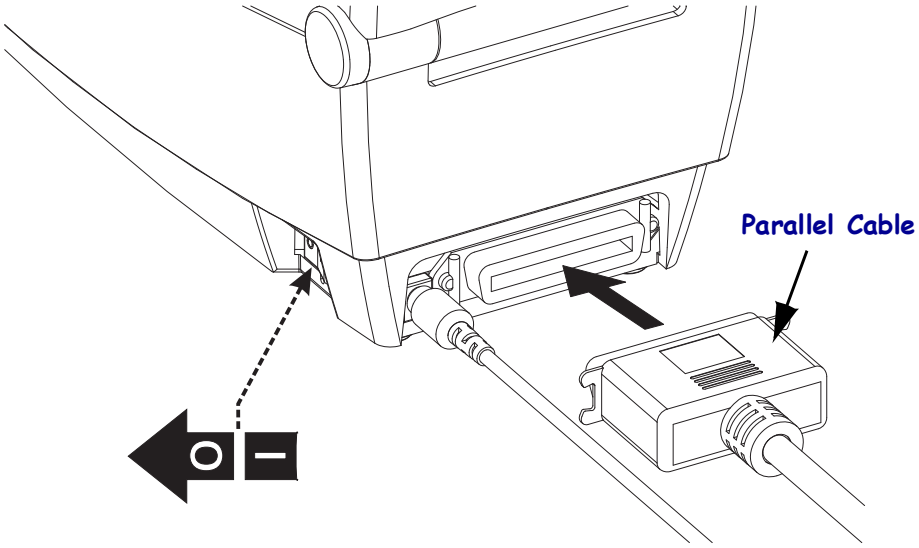

Ethernet

The printer requires UTP RJ45 Ethernet cable rated CAT-5 or better.

For more information on configuring your printer to run on a compatible Ethernet based network, see the ZebraNet® 10/100 Internal Print Server manual. The printer must be configured to run on your LAN (local area network). The print server on board your printer can be accessed through the printer's web pages.

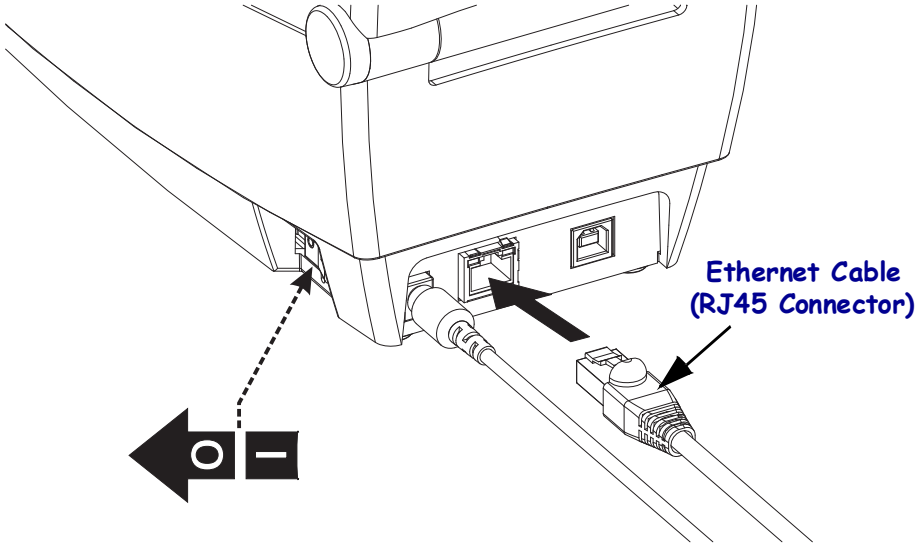

Ethernet Status/Activity Indicators

LED Status	Description
Both OFF	No Ethernet link detected
Green	100 Mbps link detected
Green with the Amber flickering on and off	100 Mbps link and Ethernet activity detected
Amber	10 Mbps link detected
Amber with the Green flickering on and off	10 Mbps link and Ethernet activity detected

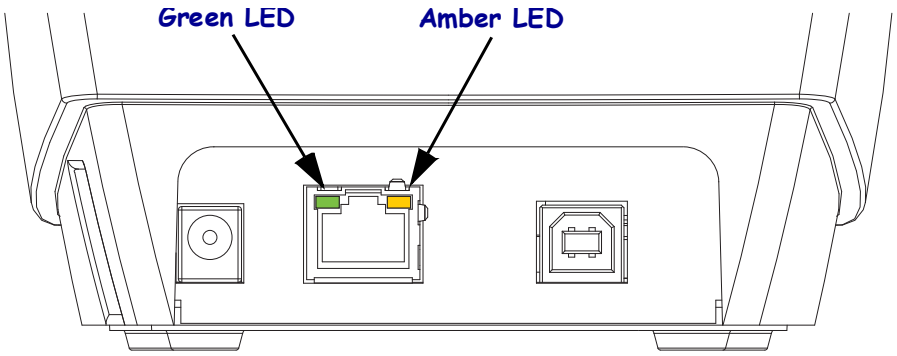

Installing Printer Drivers and Communicating with the Printer

Zebra provides the Zebra Setup Utilities (ZSU); a suite of Zebra printer drivers, utilities, and communications and installation tools for use with most Windows PC operating systems. Zebra Setup Utilities and Zebra Windows printer drivers are available on the user's CD and the Zebra web site (www.zebra.com) for latest versions.

Install the Zebra Setup Utilities before applying power to the printer connected to the PC (running a Zebra driver supported Windows operating system). Follow the Zebra Setup Utilities instructions to complete your printer installation.

Zebra Designer Driver (ZD) and Zebra Setup Utilities (which includes ZD): Windows Vista, Windows XP, Windows 2003 (server) and Windows 2000 operating systems support the USB and Parallel port communications with the 2824 Plus printers. The driver supports 32bit and 64 bit Windows operating systems and it is Windows Certified.

Note • The legacy Zebra Universal Driver (ZUD) printer driver does not support this printer.

Plug'N'Play (PnP) Printer Detection and Windows® operating systems

More recent Windows operating systems automatically detect the printer when it is connected via the USB interface. Depending on the hardware configuration and the Windows version, your printer may be PnP detected when connecting to the parallel and serial port interfaces. The printer and PC interface configuration must support and implement bi-directional communications for PnP operations.

The operating system automatically starts a "Add new hardware' wizard when connecting the printer for the first time to the PC. Close the wizard. Install the Zebra Designer Windows Driver found on the user's CD or for the latest driver go to www.zebra.com. Select the interface connection (USB, parallel, serial, Ethernet—tcp/ip) and then media size (closest match). Click on the 'Print test page' button to verify a successful installation.

The Windows operating system will detect and re-link a previously installed printer if it is reconnected to the USB interface or power is turned on after the PC has finished its restart of the operating system. Ignore the new device detected warnings and close the Task bar prompts. Wait several seconds for the operating system to match the printer to the driver software. The warnings will quit and the printer now should be ready to begin printing.

Universal Serial Bus (USB) Device Communications

The printer is a terminal device (not a host or hub) when using a universal serial bus interface. You can refer to the Universal Serial Bus Specification for details regarding this interface.
Note • Scanners, scales or other data input (terminal) devices must use the serial port (not the USB port) to send data to the printer.

Serial Port and Windows® operating systems

The Windows operating system default settings for the serial port communication closely match the printer's defaults settings with one exception; the data *Flow Control* settings. The Windows default data *Flow Control* setting is **NONE**. The 2824 Plus printer requires data *Flow Control* set to **Hardware**.

3

Print Operations

This section provides media and print handling, font and language support, and the setup of less common printer configurations.

Contents

Determining Printer Configuration 32
Print Media Types 33
Replacing Supplies 35
Media Sensing 37
Ribbon Overview 38
Printing on Fan-Fold Media 40
Printing with Externally Mounted Roll Media 41
Print Meter 41
Fonts and Your Printer 42
Sending Files to the Printer 44

Determining Printer Configuration

The 2824 Plus printer uses a ZPL printer configuration status label to report the printer's configuration status for both EPL and ZPL operations.The ZPL style label provides a more intuitive and functionally descriptive naming conventions than the EPL style printer status label. Operational status (darkness, speed, media type, etc.), installed printer options (network, interface settings, cutter, etc.) and printer description information (serial number, model name, firmware version, etc.) are all includes on the status label.

The printer's default ZPL style configuration status label printout can be localized for up to 16 languages. Use the ZPL programming command **^KL** to modify the displayed language for most status items on this label. The ZPL style status label can be printed with the ZPL **~WC** command. See *Printing a Test (Printer Configuration) Label* on page 23 or *Feed Button Modes* on page 84 for information on accessing the printer configuration status label.

To get an EPL style printer configuration status label, send the printer the EPL **U** command. See the EPL programmer's guide for more information on the various EPL **U** commands and interpreting the settings displayed on these labels.

Thermal Printing



Caution • The printhead becomes hot while printing. To protect from damaging the printhead and risk of personal injury, avoid touching the printhead. Only use the cleaning pen to perform printhead maintenance.



Caution • The discharge of electrostatic energy that accumulates on the surface of the human body or other surfaces can damage or destroy the printhead or electronic components used in this device. You must observe static-safe procedures when working with the printhead or the electronic components under the top cover.

Modes of Printing

You can operate this printer in many different modes and media configurations:

- Direct thermal printing (which uses heat sensitive media to print).
- Thermal transfer printing (which uses ribbon to heat transfer print to the media).
- Standard Tear-Off mode allows you to tear off each label (or batch print a strip of labels) after it is printed.
- Label Dispense Mode: If an optional dispenser is installed, the backing material can be peeled away from the label as it is printed. After this label is removed, the next one is printed.
- Media Cutting: If an optional media cutter is installed, the printer can cut the label liner between labels, receipt paper or tag stock.
- Stand-alone: The printer can run in a stand-alone mode (not connected to a computer) using the printer's auto running label form feature (programming based) or by using an data input device. This mode accommodates data input devices, such as scanners, weigh scales, Zebra KDU Plus or KDU (Keyboard Display Unit) via the printer's serial port.
- Shared network printing: Printers configured with the Ethernet interface option include an internal print server with ZebraLink printer configuration web page and ZebraNet Bridge software for managing and monitoring status of Zebra printers on a network.

Print Media Types



Important • Zebra strongly recommends the use of Zebra-brand supplies for continuous high-quality printing. A wide range of paper, polypropylene, polyester, and vinyl stock has been specifically engineered to enhance the printing capabilities of the printer and to prevent premature printhead wear. To purchase supplies, go to http://www.zebra.com/howtobuy.

Your printer can use various types of media:

- *Standard media*—Most standard (non-continuous) media uses an adhesive backing that sticks individual labels or a continuous length of labels to a liner.
- *Continuous roll media*—Most continuous roll media is direct thermal media (similar to FAX paper) and is used for receipt or ticket style printing.
- *Linerless media*—Linerless labels have an adhesive backing, but they are wound onto a core without a liner. The media typically is perforated and may have black marks on the bottom surface of the media to indicate label separations. The top surface of linerless media labels have a special coating that keeps the labels from sticking to each other. The printer must be equipped with a special Linerless option to be able to use linerless media to keep the media from sticking to the printer.
- *Tag stock*—Tags are usually made from a heavy paper (up to 0.0075in./0.19mm thick). Tag stock does not have adhesive or a liner, and it is typically perforated between tags.

For more information on basic media types, see Table 1.

The printer typically uses roll media, but you can use fan-fold or other continuous media too. Use the correct media for the type of printing you require. When printing without a ribbon, you must use direct thermal media. When using ribbon, you must use thermal transfer media.

Table 1 • Types of Media Roll and Fanfold Media

Media Type	How It Looks	Description
Non-Continuous Roll Media	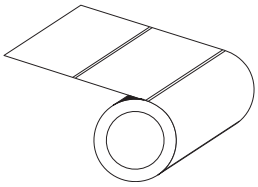	Roll media is wound on a core that can be 1 in. to 1.5 in. (25 to 38.1 mm) in diameter. Labels have adhesive backing that sticks them to a liner, and they are separated by gaps, holes, notches, or black marks. Tags are separated by perforations. Individual labels are separated by one or more of the following methods: • *Web media* separates labels by gaps, holes, or notches. 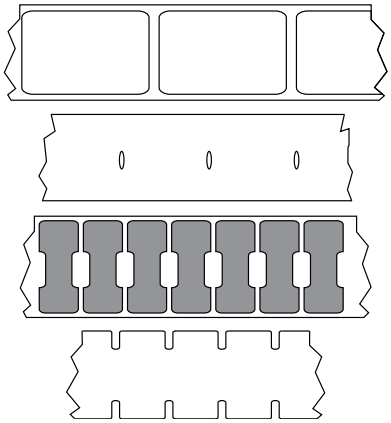 • *Black mark media* uses pre-printed black marks on the back side of the media to indicate label separations.  • *Perforated media* has perforations that allow the labels or tags to be separated from each other easily. The media may also have black marks or other separations between labels or tags. 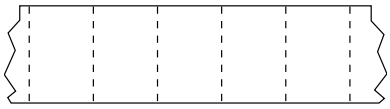
Non-Continuous Fanfold Media	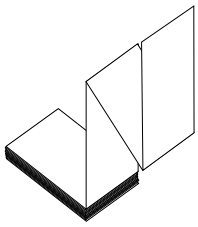	Fanfold media is folded in a zigzag pattern. Fanfold media can have the same label separations as non-continuous roll media. The separations would fall on or near the folds.
Continuous Roll Media	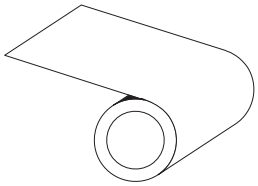	Roll media is wound on a core that can be 1 in. to 1.5 in. (25 to 38.1 mm) in diameter. Continuous roll media does not have gaps, holes, notches, or black marks to indicate label separations. This allows the image to be printed anywhere on the label. Sometimes a cutter is used to cut apart individual labels. With continuous media, use the transmissive (gap) sensor so the printer can detect when the media runs out.

Determining Thermal Media Types

Thermal transfer media requires ribbon for printing while direct thermal media does not. To determine if ribbon must be used with a particular media, perform a media scratch test.

To perform a media scratch test, complete these steps:

1. Scratch the print surface of the media with a finger nail or pen cap. Press firmly and quickly while dragging it across the media surface. Direct thermal media is chemically treated to print (expose) when heat is applied. This test method uses friction heat to expose the media.
2. Did a black mark appear on the media?

If a black mark...	Then the media is...
Does not appear on the media	**Thermal transfer**. A ribbon is required.
Appears on the media	**Direct thermal**. No ribbon is required.

Replacing Supplies

If labels or ribbon run out while printing, leave the printer power on while reloading (data loss results if you turn off the printer). After you load a new label or ribbon roll, press the Feed button to restart.

Always use high quality, approved labels, tags and ribbons. If adhesive backed labels are used that don't lay flat on the backing liner, the exposed edges may stick to the label guides and rollers inside the printer, causing the label to peel off from the liner and jam the printer. Permanent damage to the printhead may result if a non-approved ribbon is used as it may be wound incorrectly for the printer or contain chemicals corrosive to the printhead.

Adding a New Transfer Ribbon

If ribbon runs out in the middle of a print job, the indicator lights red and the printer waits for you to add a fresh roll.

1. Keep the power on as you change ribbon.
2. Open the top cover, then cut the used ribbon so you can remove the cores.
3. Load a new ribbon roll and empty ribbon core. If necessary, review the Ribbon Loading steps. *Note: Do Not Use ribbon cores with damaged notches. The notches should have square corners.*
4. Close the top cover.
5. Press the Feed button to restart printing.

Replacing a Partially Used Transfer Ribbon

To remove used transfer ribbon, perform the following steps.

1. Cut the ribbon from the take-up roll.
2. Remove the take-up roll and discard used ribbon.
3. Remove the supply roll and tape the end of any fresh ribbon to prevent it from unwrapping. When reinstalling a partially used supply roll, tape the cut end onto the empty take-up roll.

Adjusting the Print Width

Print width must be set when:

- You are using the printer for the first time.
- There is a change in media width.

Print width may be set by:

- The Windows printer driver or application software such as Zebra Designer.
- The five-flash sequence in *Feed Button Modes* on page 84.
- Controlling printer operations with ZPL programming; refer to the Print Width (**^PW**) command (consult your *ZPL Programming Guide*).
- Controlling printer operations with EPL Page Mode programming, refer to the Set Label Width (**q**) command (consult your *EPL Programmer's Guide*).

Adjusting the Print Quality

Print quality is influenced by the heat or density (setting) of the printhead, the print speed, and the type of media you are using. Only by experimenting will you find the optimal mix for your application.

Note • Media manufactures may have specific recommendations for speed settings for your printer and the media. Some media types have lower maximum speeds than your printer's maximum speed.

The relative darkness (or density) setting can be controlled by:

- The six-flash sequence in *Feed Button Modes* on page 84. This will overwrite any ZPL and EPL programmed darkness/density settings.
- The Set Darkness (**~SD**) ZPL command (consult your *ZPL Programming Guide*).
- The Density (**D**) EPL command (consult your *EPL Programmer's Guide*).

If you find that the print speed needs to be adjusted, use:

- The Windows printer driver or application software such as Zebra Designer.
- The Print Rate (**^PR**) command (consult your *ZPL Programming Guide*).
- The Speed Select (**S**) command (consult your *EPL Programmer's Guide*).

Media Sensing

The 2824 Plus printer has automatic media sensing capability. The printer is designed to continuously check and adjust media length sensing for minor variations. Once the printer is printing or feeding media, the printer continually checks and adjusts the media sensing to accommodate for minor changes in media parameters from label to label on a roll and from roll to roll of media. The printer will automatically initiate a media length calibration if the expected media length or the label to label gap distance has exceeded the acceptable variation range when starting a print job or Feeding media. The automatic media sensing in the 2824 Plus printers work the same for printer operations that use EPL and ZPL label formats and programming.

If the printer does not detect labels or blacklines (or notches with blackline sensing) after feeding the media the default maximum label length distance of 39 inches (1 meter), then the printer will switch to continuous (receipt) media mode. The printer will keep these settings until changed by software, programming or a manual calibration with different media.

Optionally, the printer can be set to do a short media calibration after printer power up or when closing the printer with power on. The printer will then feed up to three labels while calibrating.

The printer's media settings can be verified by printing a Printer Configuration label. See the *Printing a Test (Printer Configuration) Label* on page 23 for more details.

The maximum distance that the automatic media type detection and sensing will check can be reduced by using the ZPL Maximum Label Length command (**^ML**). It is recommended that this distance be set to no less than two times the longest label being printed. If the largest label being printed was a 6 inch label, then the maximum label (media) length detection distance can be reduced from the default distance of 39 inches down to 12 inches.

If the printer has difficulty automatically detecting the media type and auto-calibrating, see *Manual Calibration* on page 80 to perform an extensive calibration. It includes a printed graph of sensor operation for your media. This method disables the printer's automatic media sensing capability until the printer's default parameters are reset to the factory defaults with the four flash Feed button mode. See the *Feed Button Modes* on page 84 for more details.

The automatic media calibration can be modified, turned on or turned off to meet your needs. Sometimes print job conditions require that the printer use all the media on a roll. The two automatic media conditions, power up with media loaded and closing the printer with power on, can be controlled individually with the ZPL Media Feed command, **^MF.** The feed action discussed in the ZPL programmers guide for the **^MF** command is primarily for automatic media sensing and calibration. The automatic media calibration that controls the dynamic media (label to label) calibration is the **^XS** command. If multiple media types of different lengths, material or detection methods (web/gap, blackline or continuous) are used, you should not change these settings.

The media calibration and detection process can also be refined to match the media type loaded into the printer. Use the ZPL Media Tracking command (**^MN**) to set the media type. Sometimes the printer can detect preprinted media as the gap between labels or the liner backing with print as a blackline marks. If the **^MN** parameter for continuous media is set, then the print does not preform the automatic calibration. The **^MN** command also includes an automatic calibration parameter (**^MNA**) to return the printer to its default setting to automatically detect all media types.

Ribbon Overview

Ribbon is a thin film that is coated on one side with wax, resin, or wax resin, which is transferred to the media during the thermal transfer process. The media determines whether you need to use ribbon and how wide the ribbon must be. When ribbon is used, it must be as wide as or wider than the media being used. If the ribbon is narrower than the media, areas of the printhead are unprotected and subject to premature wear.

When to Use Ribbon

Thermal transfer media requires ribbon for printing while direct thermal media does not. Direct thermal media should never be used with ribbon. Bar codes and graphics can get distorted. To determine if ribbon must be used with a particular media, perform a media scratch test.

Coated Side of Ribbon

Ribbon can be wound with the coated side on the inside or outside. This printer can only use ribbon that is coated on the outside. If you are unsure which side of a particular roll of ribbon is coated, perform an adhesive test or a ribbon scratch test to determine which side is coated.



To determine which side of a ribbon is coated, complete these steps:

Ribbon Test with Adhesive

If you have labels available, perform the adhesive test to determine which side of a ribbon is coated. This method works well for ribbon that is already installed.

To perform an adhesive test, complete these steps:

1. Peel a label from its liner.
2. Press a corner of the sticky side of the label to the outer surface of the roll of ribbon.
3. Peel the label off of the ribbon.
4. Observe the results. Did flakes or particles of ink from the ribbon adhere to the label?

If ink from the ribbon...	Then...
Adhered to the label	The ribbon is coated on the **outside** and can be used with the 2824 Plus printer.
Did not adhere to the label	The ribbon is coated on the **inside** and can not be used in the 2824 Plus printer.

Ribbon Scratch Test

Perform the ribbon scratch test when labels are unavailable.

To perform a ribbon scratch test, complete these steps:

1. Unroll a short length of ribbon.
2. Place the unrolled section of ribbon on a piece of paper with the outer surface of the ribbon in contact with the paper.
3. Scratch the inner surface of the unrolled ribbon with your fingernail.
4. Lift the ribbon from the paper.
5. Observe the results. Did the ribbon leave a mark on the paper?

If the ribbon...	Then...
Left a mark on the paper	The ribbon is coated on the **outside** and can be used with the 2824 Plus printer.
Did not leave a mark on the paper	The ribbon is coated on the **inside** and can not be used in the 2824 Plus printer.

Printing on Fan-Fold Media

Printing on fan-fold media requires you to adjust the media guide's stop position.

1. Open the top cover.
2. Open the hangers to their widest position.
3. Snap the holder-open lock towards the front of the printer.
4. With a sample of your media, adjust the guides to the width of the media. The guides should just touch, but not restrict, the edges of the media.
5. Insert the media through the slot at the rear of the printer.
6. Run the media between the hangers and guides.
7. Close the top cover.

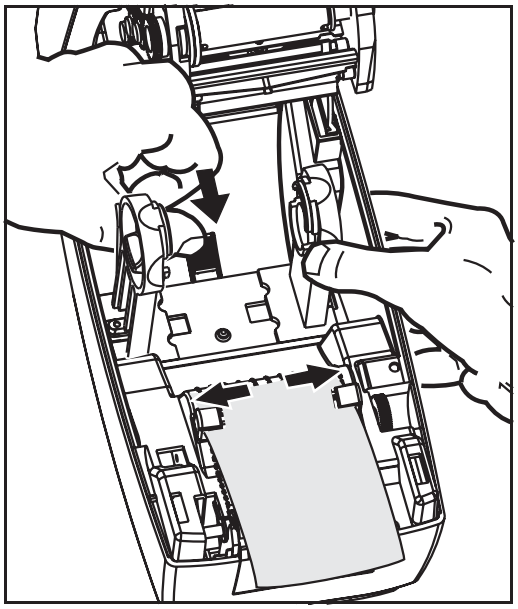

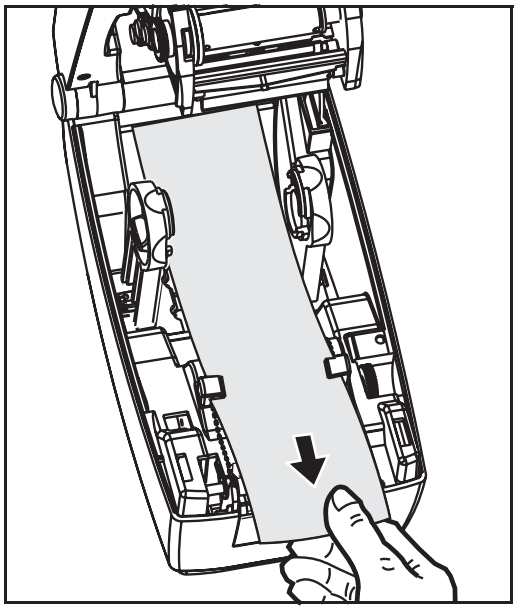

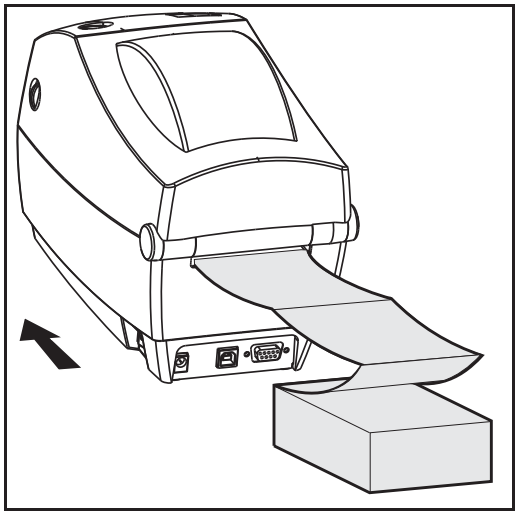

Printing with Externally Mounted Roll Media

The 2824 Plus printer accommodates externally mounted roll media similar to the printer's support of fan-fold media. The printer requires the media roll and stand combination to have a low initial inertia to pull the media off the roll.

Zebra at this time does not offer an external media option for the 2824 Plus printer.

Externally Mounted Roll Media Considerations:

- The media ideally should enter the printer directly behind the printer through the fan-fold media slot in the rear of the printer. See *Printing on Fan-Fold Media* on page 40 for media loading.
- Lower the print speed to decrease the chance of motor stalls. The roll typically has the highest inertia when trying to start the roll moving. Larger media roll diameters require the printer to have more torque applied to get the roll moving.
- The media should move smoothly and freely. The media should not slip, skip, jerk, bind and then move, etc. when mounted on your media stand.
- The printer should not touch the media roll.
- The printer should not slip or lift up off the operating surface.

Print Meter

The 2824 Plus printer has the capability to report printhead maintenance alerts. The printer can provide cleaning and early warning of end of calculated printhead life alerts. If the RTC (Real Time Clock) is installed in the printer, the printhead life and history reporting will also include the date. By default, print metering alerts are disabled.

Many of the print meter messages and reports are customize able. See the *ZPL or EPL Programming Guides* for more information on the Print Meter.

To active the Print Meter Alerts, send one of the following commands to the printer:

- EPL command **`oLY`**
- ZPL command **`^JH,,,,,E`**

Fonts and Your Printer

The 2824 Plus printer supports your language and font requirements with a variety of internal fonts, on-board font scaling, international font sets and character code page support, Unicode support, and font download. The printer includes utilities and application software that support font download into the printer for both printer programming languages.

The 2824 Plus printer's font capabilities are programming language dependent. The ZPL programming language provides advanced font mapping and scaling technology to support outline fonts (TrueType™ or OpenType™) and Unicode character mapping as well as basic bitmapped fonts and character code pages. The EPL programming language provides for basic bitmapped fonts and international code pages. ZPL and EPL programming guides describe and document the fonts, code pages, character access, listing fonts, and limitations for their respective printer programming languages. See the printer programming guides for information on Text, Fonts and Character support.

Identifying Fonts in Your Printer

Fonts and memory are shared by the programming languages in the printer. Fonts can be loaded in many memory areas in the 2824 Plus printer. ZPL programming can recognize ZPL and EPL fonts. EPL programming can only recognize EPL fonts. See the respective programmer guides for more information on fonts and printer memory.

ZPL Fonts:

- To manage and download fonts for ZPL print operation, use ZebraNet Bridge.
- To display all of the fonts loaded in your 2824 Plus printer, send the printer the ZPL command **^WD**. See the *ZPL Programmers Guide* for details.
  - Bitmap fonts in the various printer memory areas are identified by the **.FNT** file extension in ZPL.
  - Scalable fonts are identified with the **.TTF**, **.TTE** or **.OTF** file extensions in ZPL. EPL does not support these fonts.
  - The six fonts **LMu.FNT** through **LMz.FNT** are EPL Line Mode fonts and are not available for use in EPL programming on thermal transfer 2824 Plus printers.
  - When displayed in ZPL, the EPL Soft fonts have are separated into two groups-horizontal and vertical. The EPL Soft fonts are noted with single lowercase alpha characters (**a-z**) followed by an uppercase **H** or **V** and the **.FNT** file extension.

EPL Fonts:

- To download fonts for EPL print operation, use the EPL Font Downloader.
- To display Soft Fonts (ext.) available to EPL, send the printer the EPL command **EI**.
  - Asian Fonts in 2824 Plus printers are displayed as Soft Fonts, but are still accessible as documented in the **A** command in the EPL programmer's guide.
  - All EPL fonts displayed are bitmap fonts. They do not include the **.FNT** file extension or the horizontal (**H**) or vertical (**V**) designators that are displayed with the ZPL command **^WD** as described above in ZPL Fonts.
- To remove non Asian EPL fonts with EPL programming, use the **EK** command.
- To remove EPL Asian fonts from the printer, use the ZPL **^ID** command.

Localizing the Printer with Code Pages

The 2824 Plus printer supports two sets of language, region and character sets for permanent fonts loaded into the printer for each printer programming language, ZPL and EPL. The printer supports localization with common international character map code pages.

- For ZPL code page support, including Unicode, see the **^CI** command in the ZPL programmer's guide.
- For EPL code page support, see the **I** command in the EPL programmer's guide.

Asian fonts and Other Large Font Sets

Asian character sets, such as Simplified Chinese, Traditional Chinese, Korean, and Japanese, contain many thousands of characters while Latin-based character sets contain less than 256 characters. Historically, the industry has supported these large Asian character sets through double byte character sets, as opposed to the single byte character sets used for Latin-based characters. Each Asian double byte character set is independent from the others presenting issues such as mapping conflicts and constraints with using them simultaneously. Unicode, a universal character set, was conceived to consolidate and resolve the complications that result from using multiple independent character sets. Unicode includes all the characters from the independent character sets thus resolving the issues of character mapping conflicts and requirements to use multiple character sets. ZPL programming language supports Unicode and Unicode-compliant fonts. EPL programming language does not support Unicode.

Zebra offers non-Unicode compliant Asian fonts for EPL and ZPL programming languages.

Zebra offers two (2) Unicode compliant fonts for multi language printing, they are:

- Swiss721 that supports European, Middle Eastern, and African (EMEA) languages.
- Andale that supports EMEA and Southeast Asian and CJKV languages.

These Unicode compliant fonts can only be used with the ZPL programming language.

Memory requirements:

- Asian language support using non-Unicode or Unicode compliant fonts require the factory fitted Full Flash Memory option (64Mb).
- Printers with the standard memory option (4MB) can support the Unicode compliant Swiss721 font available on the Zebra web site.
- The number of fonts that can be downloaded is dependent upon the amount of available flash memory not already in use and the size of the font to be downloaded.

Getting Asian Fonts

Asian font sets are downloaded into the printer by the user or integrator. The fonts are purchased separately from the printer.

- Simplified and Traditional Chinese (ZPL and EPL)
- Japanese — JIS and Shift-JIS mappings (ZPL and EPL)
- Korean (ZPL including Johab and EPL)
- Thai (ZPL only)

Stand Alone Printing

Your printer can be configured to work without being attached to a computer. The printer has the ability to automatically run a single label form. One or more downloaded label forms can be accessed and run with a terminal or wedge device or a Zebra KDU (keyboard display unit) to call a label form. These methods allow the developer to incorporate data input devices, such as scanners or weight scales, to the printer via the serial port.

Label formats can be developed and stored in the printer to support labels that have:

- No data entry required and print when the Feed button is pressed.
- No data entry required and print when a label is removed from the printer's optional label dispenser.
- One or more data variables to be entered via the terminal or wedge device. The label will print after the last variable data field has been input.
- One or more label formats that are called by scanning bar codes containing programming to run a label form.
- Label forms designed to work as a process chain with each label including a bar code containing the programming to run the next label in the process sequence.

The EPL programming language supports a special label forms that will automatically run after a power cycle or reset. EPL looks for a label form named **AUTOFR.** The EPL **AUTOFR** form runs until it is disabled. AUTOFR form must be deleted from the printer followed by a reset or a power cycle to completely remove the file.

Both printer programming languages support special label forms that will automatically run after a power cycle or reset. The ZPL looks for a file named **AUTOEXEC.ZPL** and EPL looks for a label form named **AUTOFR.** If both files are loaded in the 2824 Plus printer, then only the AUTOEXEC.ZPL will run. The EPL AUTOFR form runs until it is disabled. Both files must be deleted from the printer followed by a reset or a power cycle to completely remove the files.



Note • The 2824 Plus EPL **AUTOFR** command can only be disabled with **NULL** character (00 hex or ASCII 0). The 2824 Plus printer will ignore the other character that normally disables the AUTOFR form operation in EPL printers, the XOFF character (13 hex or ASCII 19).

The 2824 Plus printer can source up to 750mA through the serial port's 5 volt line; see Appendix A for more information on the printer's serial port interface.

Sending Files to the Printer

Graphics, fonts and programming files can be sent to the printer from the Microsoft Windows operating systems by using the Zebra Setup Utilities, ZebraNet™ Bridge or Zebra Firmware (and File) Downloader both found on the user's CD or at www.zebra.com. These methods are common for both programming languages and the 2824 Plus printers.

4

Printer Options

This section covers the common printer options and accessories with brief descriptions and how to get you started using or configuring your printer option or accessory.

Contents

Label Dispenser Option 46
Cutter Option 49
ZebraNet® 10/100 Internal (Wired) Print Server Option 54
RTC and Full Flash Memory Option 56
Asian Fonts - Printer Accessory 57
KDU — Printer Accessory 58
KDU Plus — Printer Accessory 59

Label Dispenser Option

The factory installed label dispenser option allows you to print a label with backing (liner/web) being removed from the label as it prints, ready for application. When printing multiple labels, removing the dispensed (peeled) label notifies the printer to print and dispense the next label.

To use dispenser-mode correctly, use your printer driver to activate the label (taken) sensor along with these typical label settings which include but are not limited to length, non-continuous (gap), and web (liner). Otherwise, you must send the ZPL or EPL programming commands to the printer.

When programming in ZPL, you can use the following command sequences shown below and refer to your *ZPL Programming Guide* for more information on ZPL programming.

```
^XA ^MMP ^XZ
^XA ^JUS ^XZ
```

When programming in EPL, send the Options (**O**) command with the '`P`' command parameter (**OP**) to enable the Label Taken sensor. Other printer option parameters may also be included with the Options command string. Refer to your *EPL Programmer's Guide* for more information on programming with EPL and the Options (**O**) command behaviors.

1. Load your labels into the printer. Close the printer and press the Feed button until a minimum of 4 inches or 100 millimeters of exposed labels exit the printer. Remove the exposed labels from the liner.

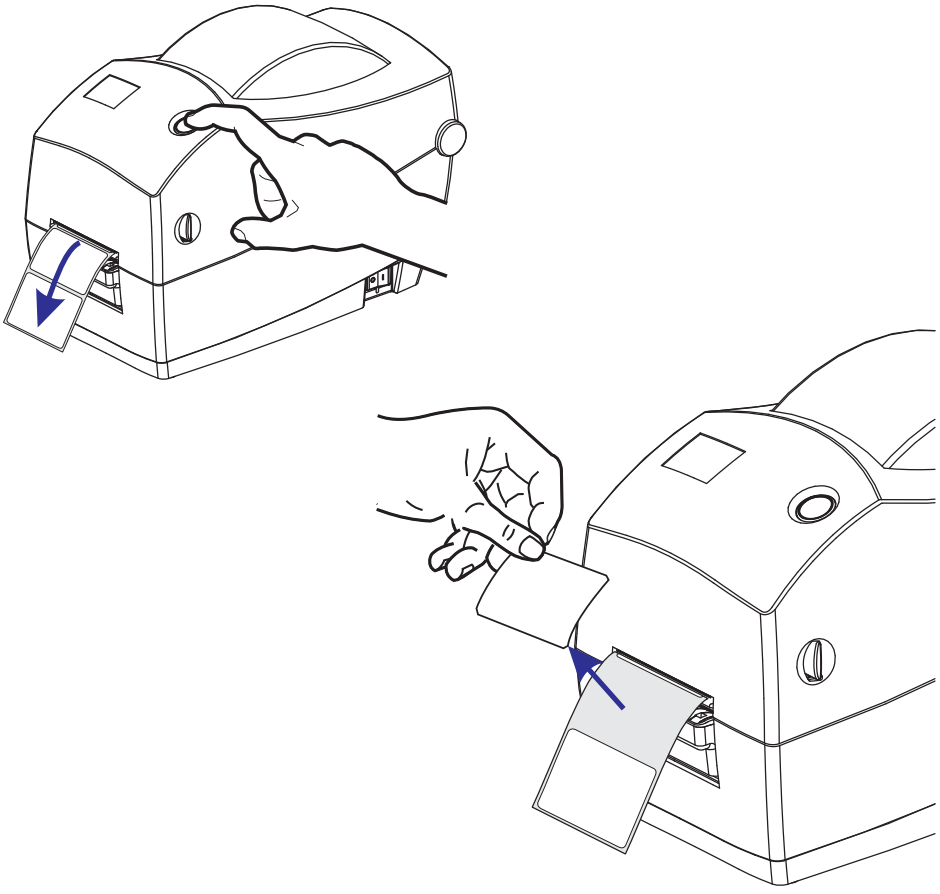

2. Lift the liner over the top of the printer and open the dispenser door.

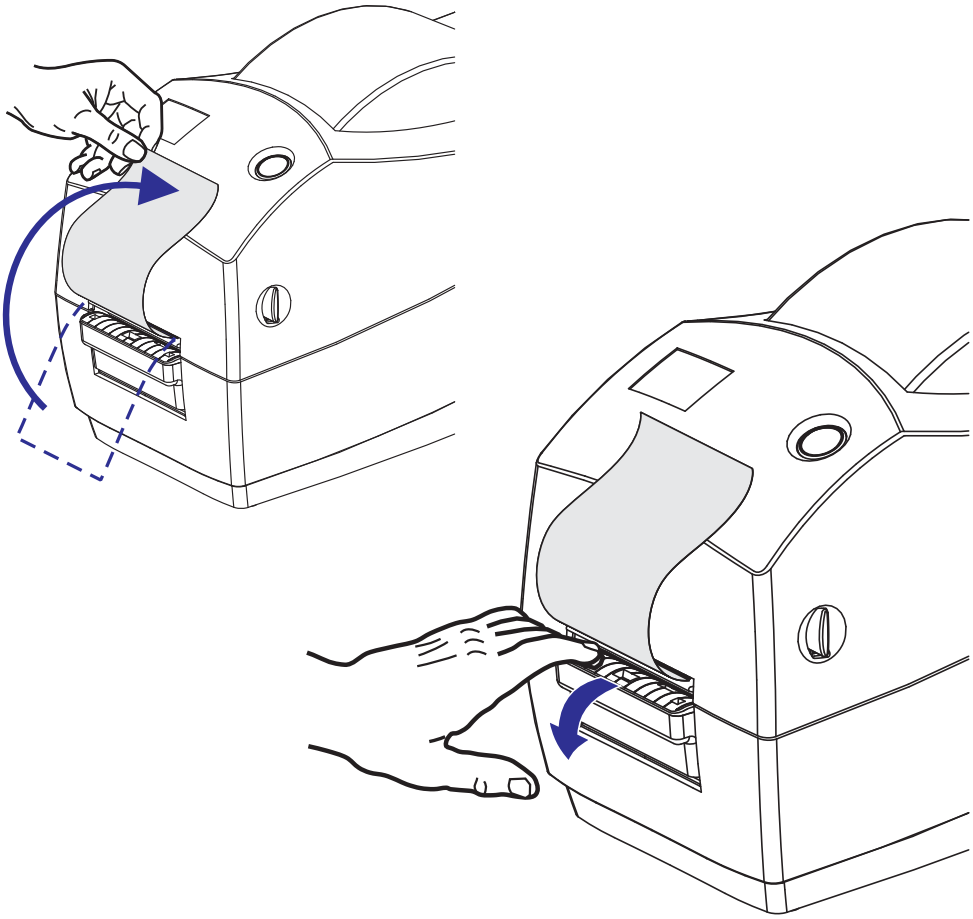

3. Insert the label liner between the dispenser door and the printer body.

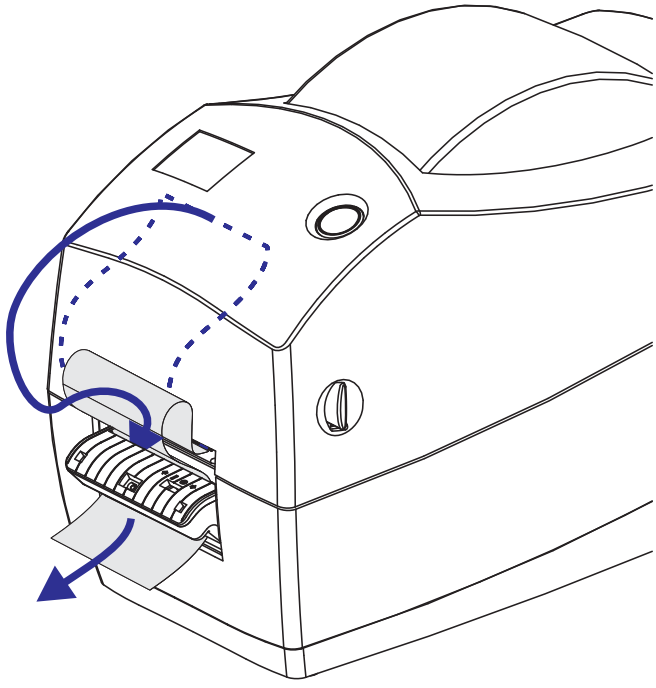

4. Close the dispenser door.

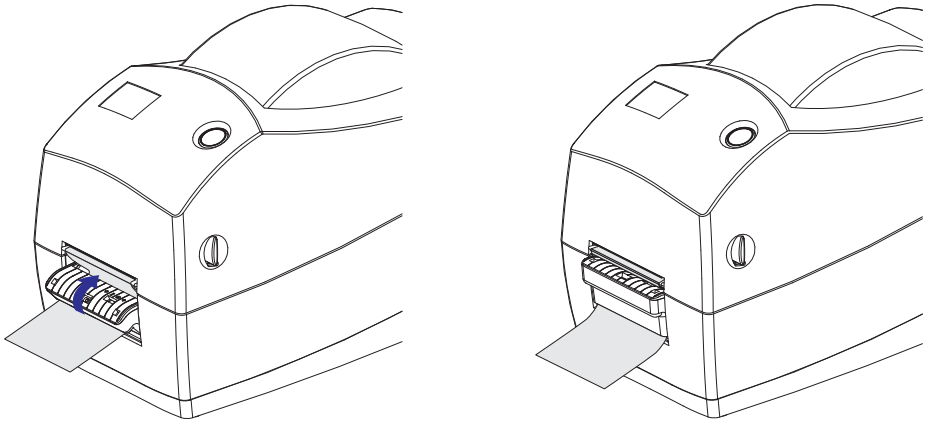

5. Press the Feed button to advance the media.

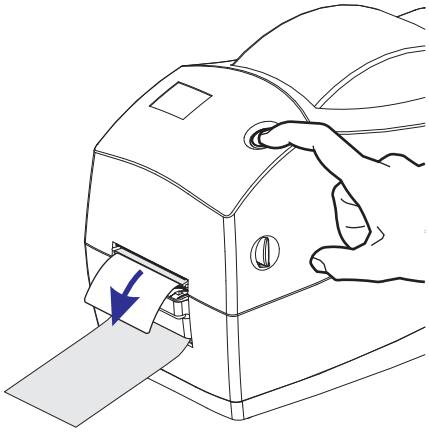

6. During the print job, the printer will peel off the backing and present a single label. Taking the label from the printer to allow the printer to print the next label. Note: If you did not activate the label taken sensor to detect the removal of the dispensed (peeled) label with software commands, the printer will stack and eject peeled labels.

Cutter Option

The printer has a factory installed media cutter option for full width cutting of label liner, tag or receipt media. The type of cutter option installed in your printer can be verified by printing a *printer configuration status* label. The cutter options are:

- **A medium duty cutter** for cutting label liner and light tag media (LINER/TAG)
  Maximum Paper Weight (thickness): up to 180 g/m2 (0.0077 in.)
  Life*: 2 million cuts: 0.5 mil to 5 mil stock (10-120 g/m2)
  1 million cuts: 5 mil to 7.5 mil stock (120-180 g/m2)
  750,000 cuts: 7.5 mil to 10 mil (180-200 g/m2)

  ** - Exceeding the maximum media weight (density/hardness) and thickness will shorten the cutters usable life or can cause the cutter to fail (jam or other error).*
- **Cut Width**: 2.25 inches (57.1 mm) maximum to 1 inches (25.4 mm) minimum
- **Minimum distance between cuts (label length):** 1 inch (25.4 mm). Cutting shorter media lengths between the cuts may cause the cutter to jam or error.
- By default, the cutter operations include a self cleaning preventive maintenance cleaning cut after every twenty-fifth cut. This feature can be disabled via ZPL or EPL SGD (Set/Get/DO) programming command (**`cutter.clean_cutter`**) but is not recommended.



Warning • There are no operator serviceable parts in the cutter unit. Never remove the cutter cover (bezel). Never attempt to insert objects or fingers in to the cutter mechanism.

Important • Tools, cotton swabs, solvents (including alcohol), etc. all may damage or shorten the cutter's usable life or cause the cutter to jam.

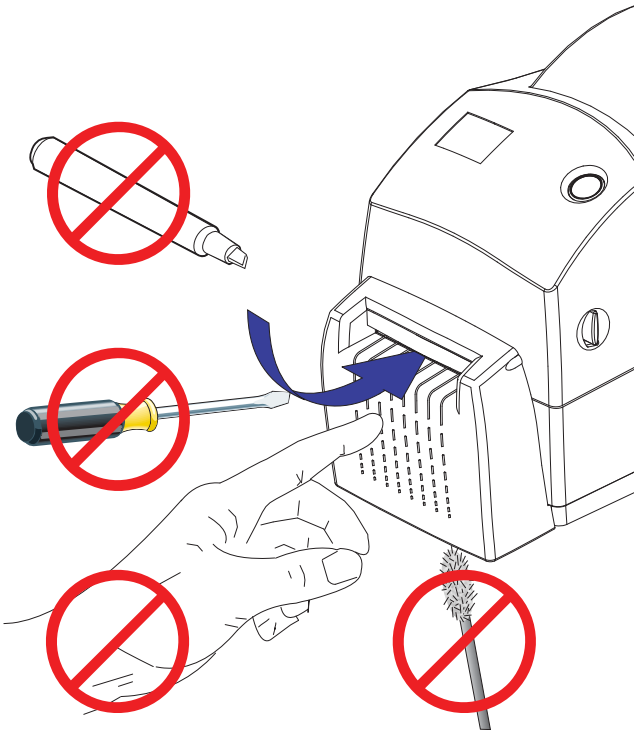

Loading Media with the Cutter Option

1. Open the printer. Remember that you need to pull the release latch levers toward the front of the printer.

2. Check the core of the media roll and adjust the roll holder's slide adjustment, if necessary.

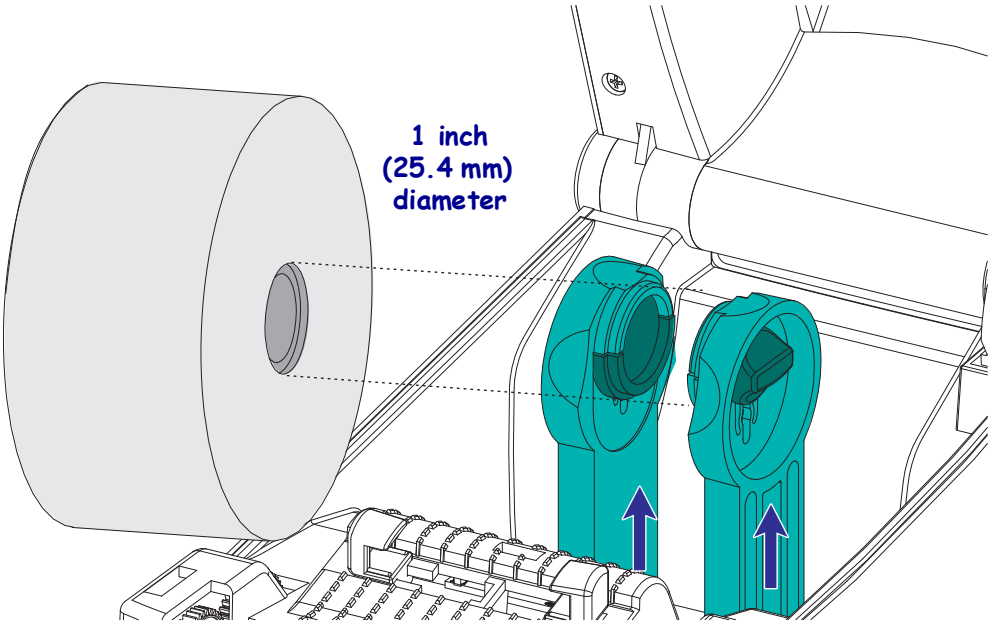

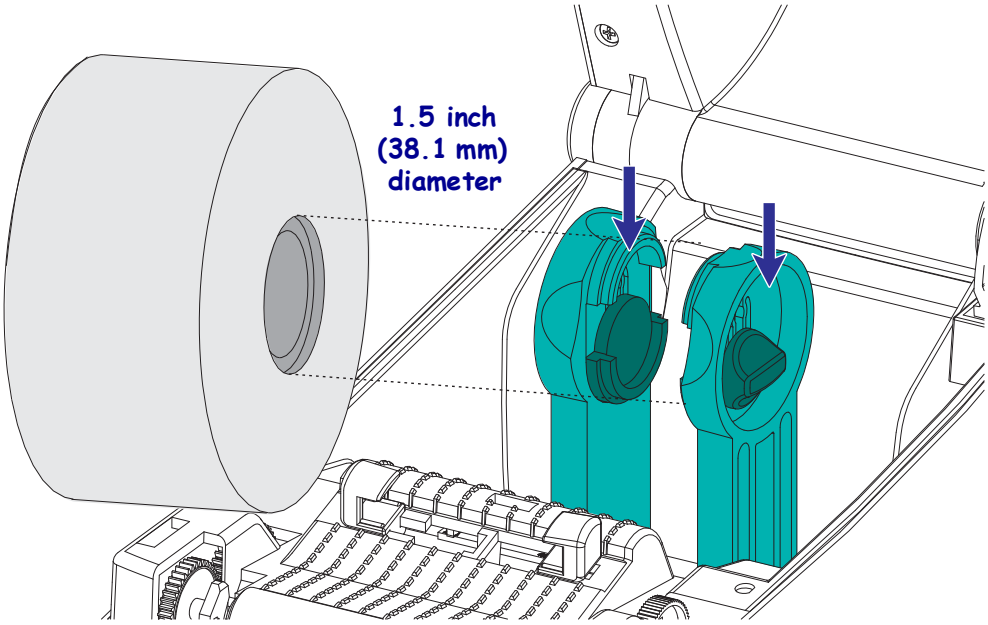

3. Open the media guides wider than the media width. Turn the media guide's thumb wheel towards the rear of the printer to open the guides wider.

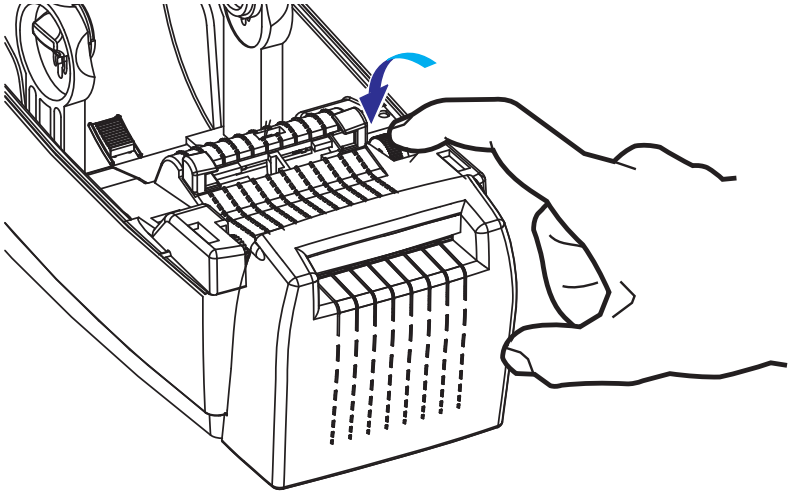

4. Open the media roll holders. Pull the media guides open with your free hand and place the media roll on the roll holders and release the guides. Orient the media roll so that its printing surface will face up as it passes over the platen (drive) roller.

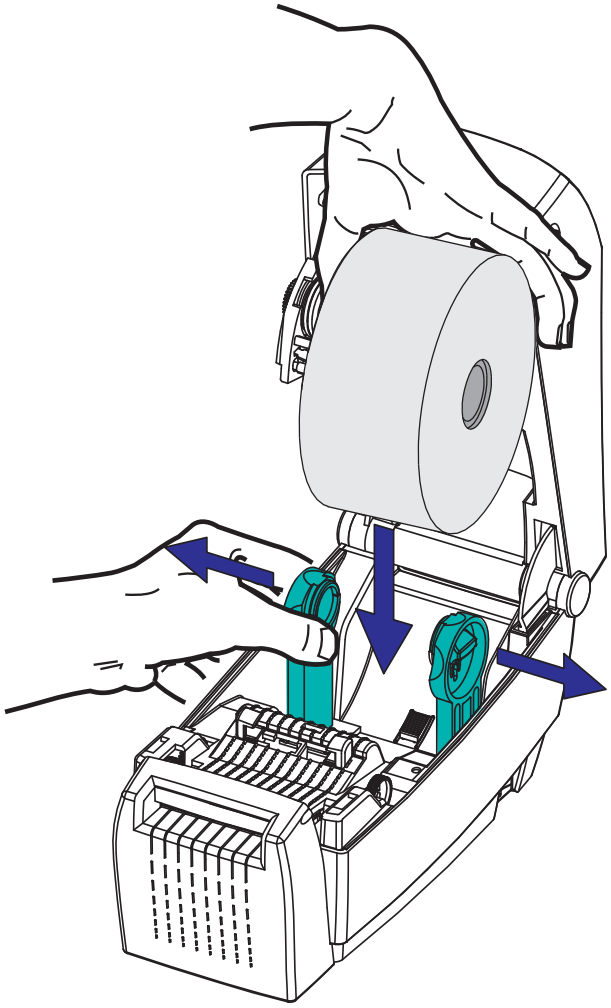

5. Pull and thread the media through the cutter so that it extends out of the front of the printer. Verify the roll turns freely. The roll must not sit in the bottom of the media compartment. Verify that media's printing surface is facing up.

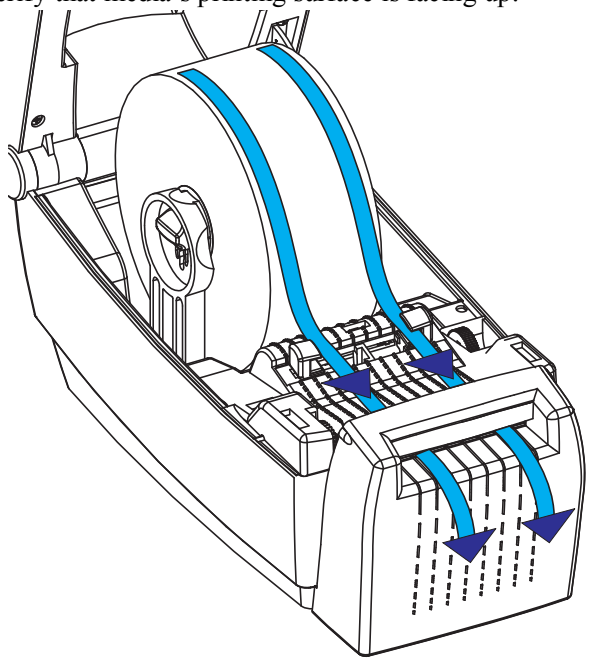

6. Push the media under both of the media guides.

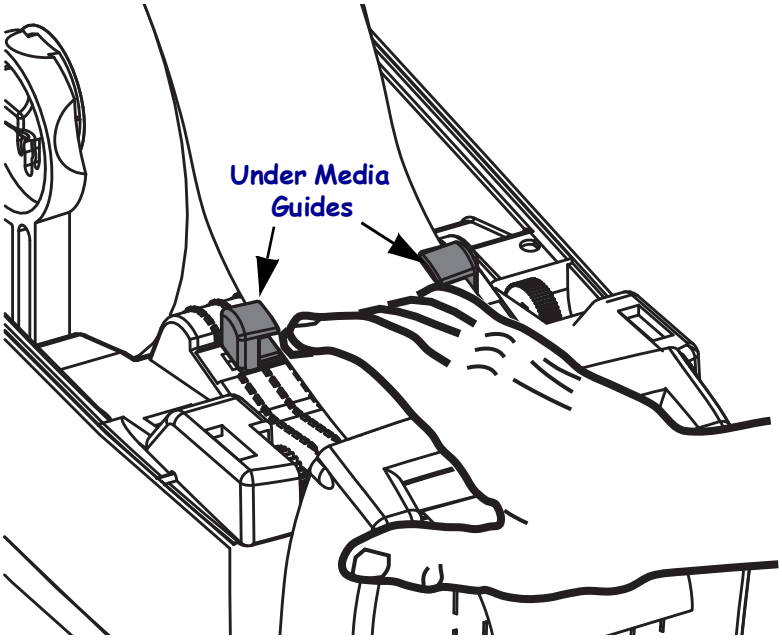

7. Adjust the media guides so that the both sides of the media are just touching the inside of the guides. Turn the media guide's thumb wheel towards the front of the printer to made the guides tighter (narrower).

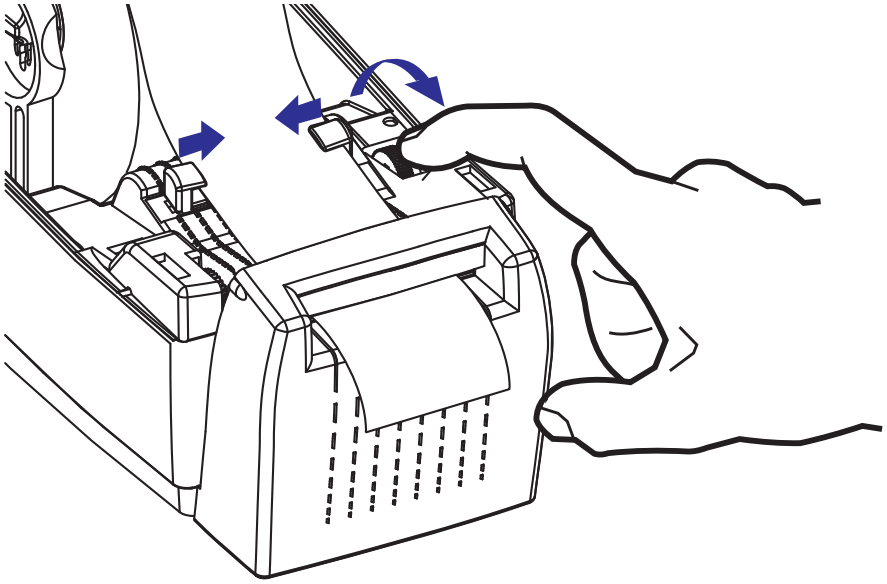

8. Close the printer. To lower the top cover, first press the top cover's latching stand towards the center of the printer. Gently swing the top cover down onto the printer's base. Press down on both sides until the cover snaps closed, typically with an audible sound.

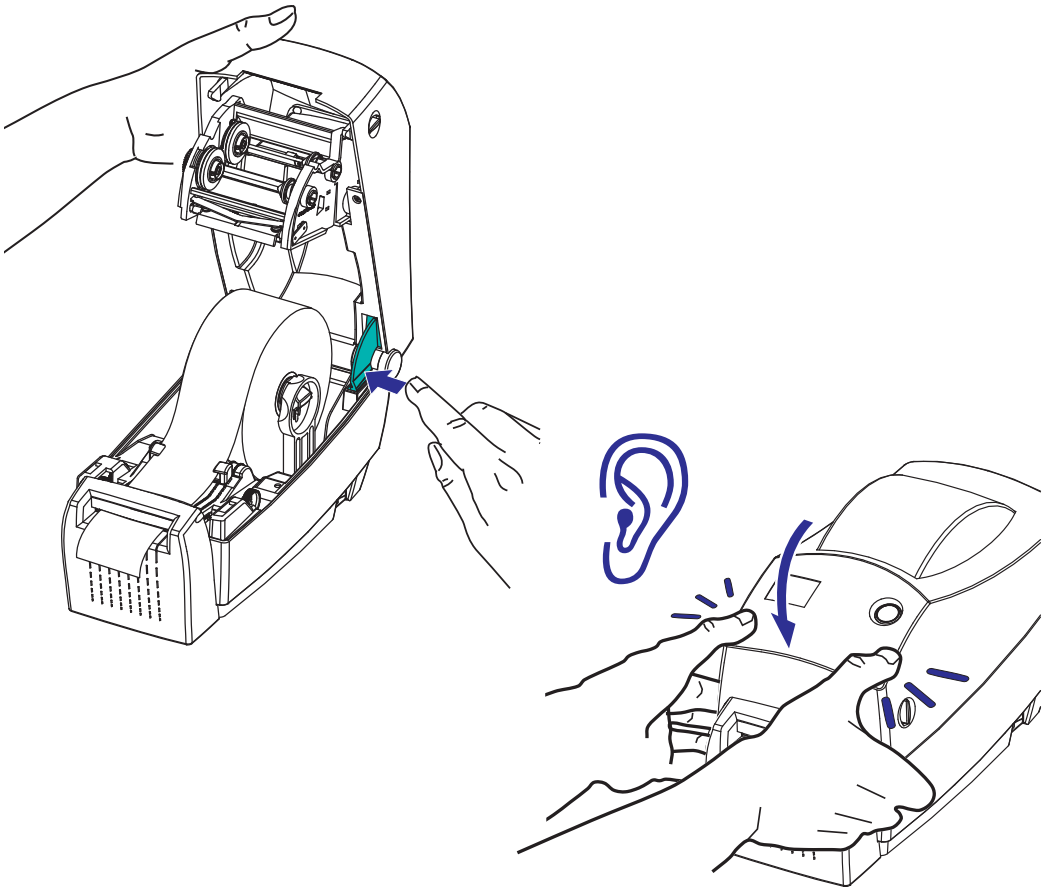

ZebraNet® 10/100 Internal (Wired) Print Server Option

The ZebraNet® 10/100 Internal Print Server (PS) is an optional factory installed device that connects the network and your ZebraLink™-enabled printer. The print server provides you with a browser interface for printer and print server settings. If you use the ZebraNet™ Bridge Zebra network printer management software, you can easily access the specialized features of a ZebraLink™ enabled printer.

Printers with the 10/100 Internal PS provide the following features:

- Print server and printer setup using a browser
- Remote monitoring and configuration capability of the 10/100 Internal PS using a browser
- Alerts
- The ability for you to send unsolicited printer status messages via E-mail-enabled devices

ZebraNet™ Bridge — ZebraNet™ Bridge is a software program that works with the 10/100 Internal PS and enhances the features of ZebraLink resident within ZPL-based printers. The features include the following:

- ZebraNet™ Bridge allows you to locate printers automatically. ZebraNet™ Bridge searches on parameters such as IP address, subnet, printer model, printer status, and many other user-defined characteristics.
- Remote Configuration — Manage all your Zebra label printers throughout the enterprise without having to travel to remote sites or physically handle any printers. Any Zebra printer connected to the enterprise network can be accessed from the ZebraNet™ Bridge interface and configured remotely through an easy-to-use graphical user interface.
- Printer Alerts, Status, Heartbeat Monitoring and event Notification — ZebraNet™ Bridge lets you configure multiple event alerts per device with different alerts directed to different people. Receive alerts and notifications by e-mail, cell phone/pager, or through the ZebraNet™ Bridge Events tab. View alerts by printer or group, and filter by date/time, severity, or trigger.
- Configure and Copy Printer Profiles — Copy and paste settings from one printer to another or broadcast them to an entire group. ZebraNet Bridge allows you to copy printer settings, printer-resident files (formats, fonts, and graphics), and alerts with a click of the mouse. Create printer profiles—virtual “golden printers”—with desired settings, objects, and alerts, and clone or broadcast them as if they were real printers, providing extensive savings in setup time. Printer profiles are also an excellent way to back up a printer’s configuration for crisis recovery.

Printer Network Configuration Status Label

2824 Plus printers with the ZebraNet® 10/100 Internal Print Server option on-board print an additional printer configuration status label for information needed to establish and trouble shoot network printing. The following printout is printed with the ZPL **~WL** command.

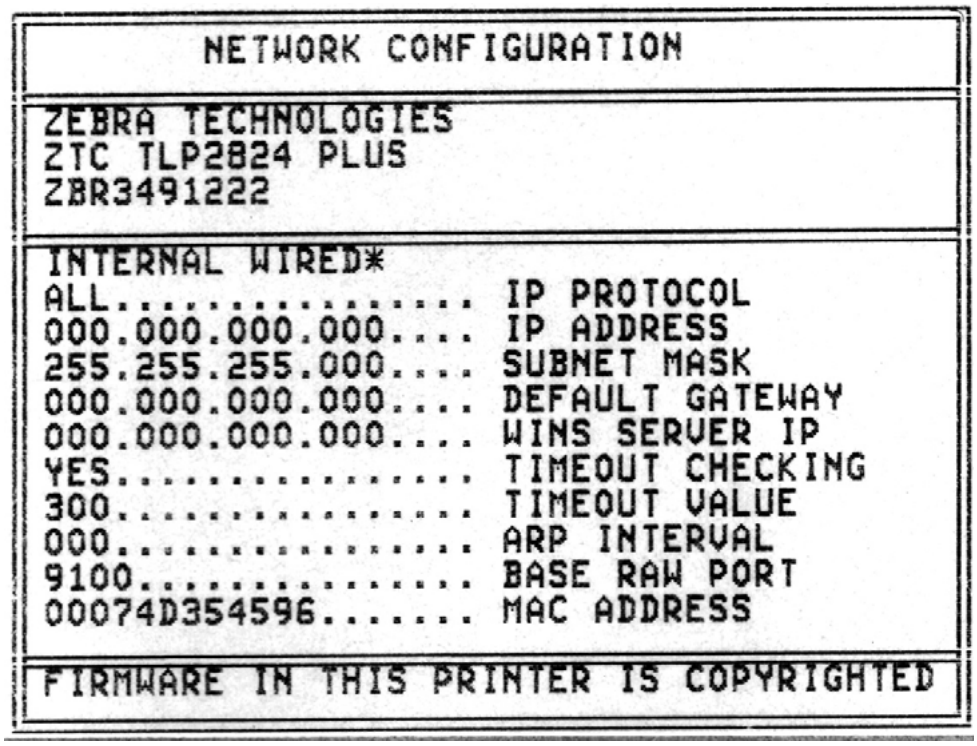

The regular printout of the configuration status label has some of the printer's network settings such as IP Address, on the lower half of the printout.

The printer's IP address is needed to identify and configure the printer for operations on your network. See the ZebraNet® 10/100 Internal Print Server manual for more information.

RTC and Full Flash Memory Option

Printers with the factory installed RTC (Real Time Clock) and Full Flash Memory option allow you to create highly customize-able printer applications, improve printer productivity and flexibility, and provide extra memory to store more forms, graphics (logos), fonts, and the large Asian font sets.

The RTC allows the label form developer to include:

- Time Date Stamping
- Pre or Post Dating
- Allows Date/Time date to be included on printed form without altering the form
- Provide dates and times without needing to generate them with the host system, application software or programmatically by another process (e.g. a database report).

The RTC enhances the printer's ability to operate in a stand-alone configuration (e.g. not connected to a host or PC). A common use would be to provide a date stamp to a tag, ticket, label or receipt printed on demand. See *Stand Alone Printing* on page 44 for more details.

The RTC feature supports both ZPL and EPL printer programming. The two programming behaviors that display the time and date are independent of each other. The commands that set time and date change them for both printer languages.



Caution • The optional RTC assembly has a three volt lithium battery. You can discern a low or flat battery if the printer provides a consistently delayed date stamp. Battery replacement must be performed by a qualified service technician. Only use a Zebra approved replacement battery.



Important • Recycle batteries according to local your guidelines and regulations. Wrap the battery when disposing (or storing) to avoid a short circuit.

DO NOT short circuit the battery. Short circuiting the battery may result in heat generation, fire or bursting.

DO NOT heat, disassemble or dispose of battery in fire.

The Full Flash Memory provides an additional 64 Megabytes to the printer's standard 4 Megabytes of printer memory for a total of 68 Megabytes printer memory.

Asian Fonts - Printer Accessory

Asian font sets are downloaded into the printer by the user or integrator. Your 2824 Plus printer must have the RTC and Full Flash Printer Memory option installed to support the large Asian font files. The fonts are obtained separately from the printer.

- Simplified and Traditional Chinese (ZPL and EPL)
- Japanese — JIS and Shift-JIS mappings (ZPL and EPL)
- Korean (ZPL including Johab and EPL)
- Thai (ZPL only)

See *Fonts and Your Printer* on page 42 for more details on Asian fonts.

KDU — Printer Accessory

The KDU (keyboard display unit) is a small terminal unit that interfaces with the printer for accessing EPL label forms stored in the printer. Your 2824 Plus printer must include the serial port option to operate with the KDU.

The KDU is strictly a terminal and does not have the capability to store data or set up parameters. The KDU is used for the following functions:

- List label forms stored in printer
- Retrieve label forms stored in printer
- Input variable data
- Printing labels

The KDU was designed for Zebra EPL printers. The EPL printer's serial port was configured for DCE (data communication equipment) communications configuration. The 2824 Plus printer supports DTE (data terminal equipment) serial port configuration with the serial port auto-detection and configuration. The printer supplies the KDU with power through the serial port. The KDU serial port adapter supplied with new KDU's is not needed.

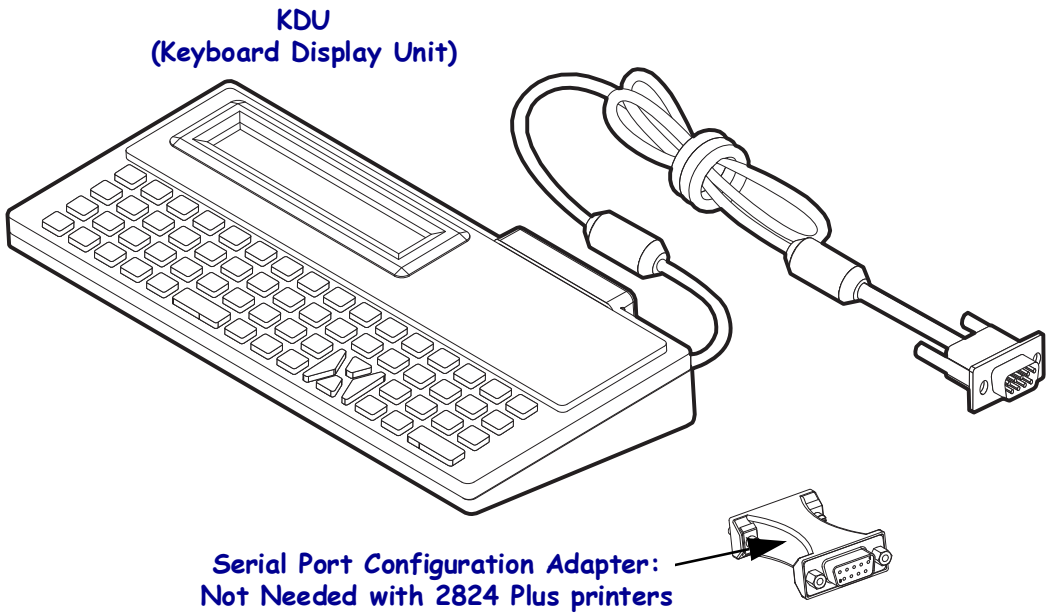

KDU Installation

1. Turn the printer power off. Disconnect the any other interface cables attached to the printer.
2. Plug the KDU's cable onto the printer's serial port, tighten the screws to secure the cable.
3. Turn the printer power on. See the KDU users and EPL programmer's guides for more detail on KDU and printer operations and usage.

KDU Plus — Printer Accessory

The KDU Plus is a terminal device with memory for storing files and maintaining one or more remote printers. The KDU Plus has a larger laptop style keyboard than the Zebra's original KDU design. Your 2824 Plus printer must include the serial port option to operate with the KDU Plus.

The KDU Plus is designed for the following functions:

- List label forms stored in printer
- Retrieve label forms stored in printer
- Input variable data
- Printing labels
- File storage and transfer

The KDU Plus is designed to work with ZPL and EPL printers by dynamically detecting and switching the printer's communications configuration (DTE or DCE) to match your Zebra printer. By default, the KDU Plus will start up forms mode. This is compatible with the operation of Zebra's original KDU. The KDU Plus is configurable to work in ZPL or terminal modes too.

The KDU Plus has file transfer and storage capabilities. This is great for maintaining remote and stand alone printers with label forms, logos and smaller font sets.

The KDU Plus has two configurable serial port and a PS/2 port to connect to other data input devices such as scanners, weigh scales, etc.

The +5 volts from the printer's serial (pin 9) provides power for the KDU Plus and any additional input devices attached to the KDU Plus.

Maximum total current draw for the 2824 Plus printer's serial port: **750mA**
The KDU Plus's current without external input devices attached is: **50mA**

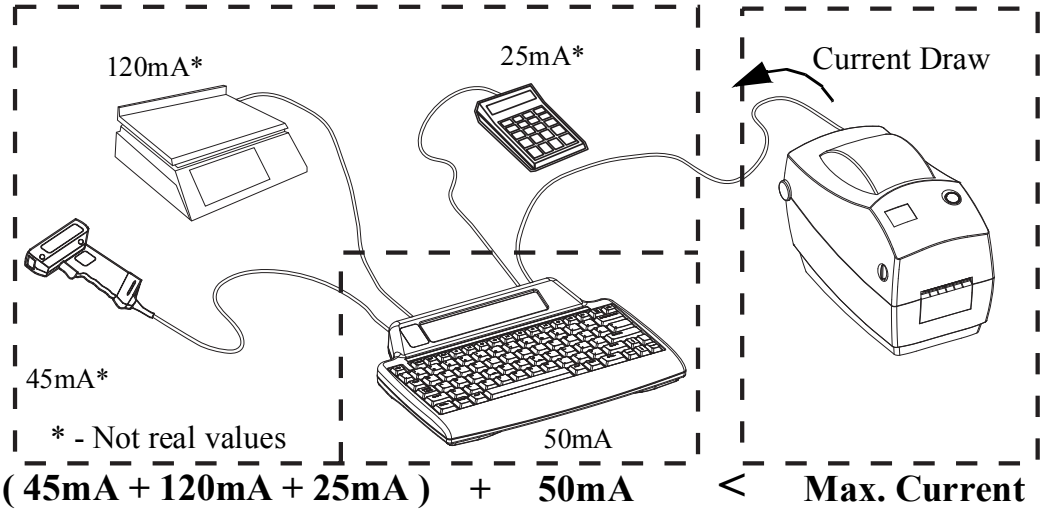

Caution • The KDU Plus's input ports (AUX1, AUX2, and PS/2 style) are not fused. Exceeding the total current draw available could damage an input device, KDU Plus, or the printer.



Notes •

5

Maintenance

This section provides routine cleaning and maintenance procedures.

Contents

Cleaning 62
Cleaning the Printhead 63
Media Path Considerations 64
Platen Cleaning and Replacement 66
Other Printer Maintenance 67
Replacing the Printhead 68

Cleaning

When you clean the printer, use one of the following supplies that best suits your needs:

Cleaning Supplies	Order Quantity	Intended Purpose
Cleaning pens (105950-035)	Set of 12	Clean printhead
Cleaning swabs (105909-057)	Set of 25	Clean media path, guides and sensors

You can obtain cleaning supplies at www.zipzebra.com.

The cleaning process takes just a couple of minutes using the steps outlined below.

Printer Part	Method	Interval
Printhead	Let the printhead to cool for a minute, then use a new cleaning pen to swab the dark line on the printhead cleaning from the center to the outside edges of the printhead. See *Cleaning the Printhead* on page 63	When using ribbon: after every roll of ribbon; when using direct thermal: after every roll of media.
Platen roller	Remove the platen roller to clean. Clean the roller thoroughly with 90% medical-grade alcohol and a cleaning swab or lint-free cloth. See *Platen Cleaning and Replacement* on page 66	As needed.
Peel bar Media path	Clean it thoroughly with 90% medical-grade alcohol and a fiber-free cleaning swab. Let alcohol dissipate and the printer dry completely.	
Exterior	Water-dampened cloth.	
Interior	Gently brush out printer.	

Caution • Adhesives and media material can over time transfer onto the printer components along the media path including the platen and printhead. This build-up can accumulate dust and debris. Failure to clean the printhead, media path and platen roller could result in inadvertent loss of labels, label jams and possible damage to the printer.

Important • Using too much alcohol can result in contamination of the electronic components requiring a much longer drying time before the printer will function properly.

Cleaning the Printhead

Always use a new cleaning pen on the printhead (an old pen carries contaminants from its previous uses that may damage the printhead).

Caution • The printhead becomes hot while printing. To protect from damaging the printhead and risk of personal injury, avoid touching the printhead. Use only the cleaning pen to perform maintenance.

When you load new media, you can also clean the printhead.

1. Rub the cleaning pen across the dark area of the printhead. Clean from the middle to the outside. This will move adhesive transferred from the edges of media to the printhead outside of the media's path.
2. Wait one minute before closing the printer.

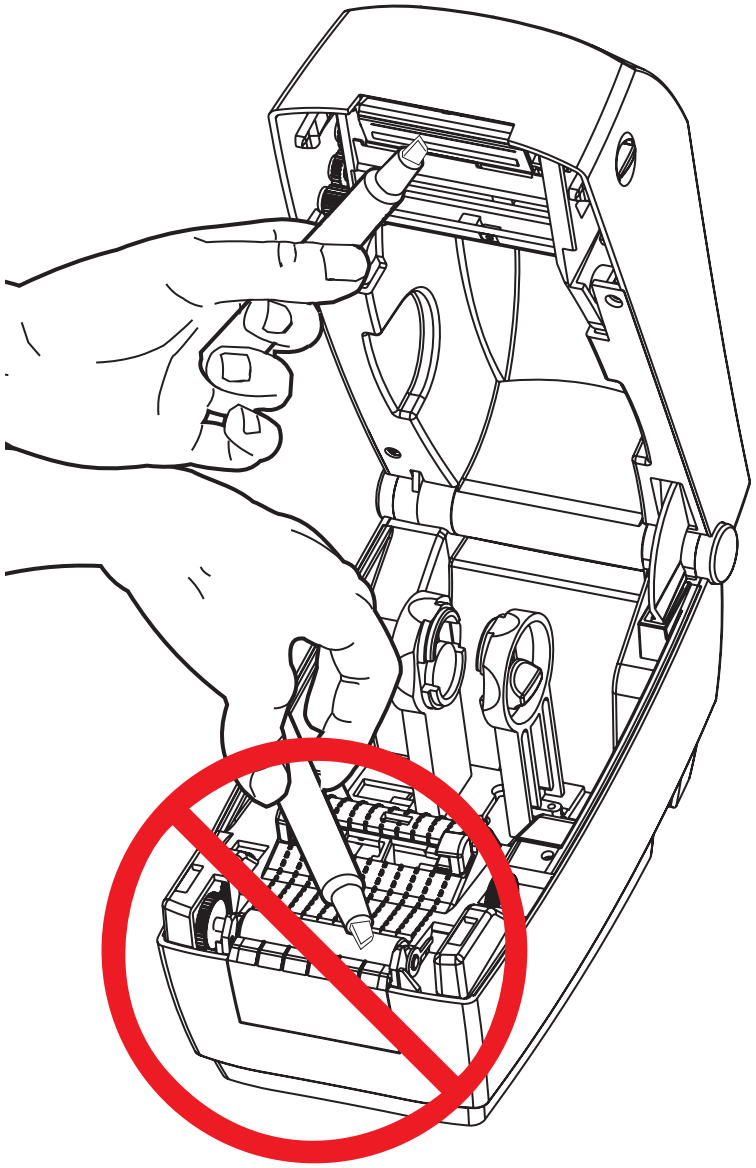

Media Path Considerations

Use a cleaning swab to remove debris or dust that has built-up on the holders, guides and media path surfaces.

1. Use the alcohol in the cleaning swab to soak the debris to break up the adhesive.
2. Wipe the ridges to remove accumulated debris.
3. Wipe the inside edges of both edge guides to remove any built-up residue.
4. Wait one minute before closing the printer.

Discard the cleaning swab after use.

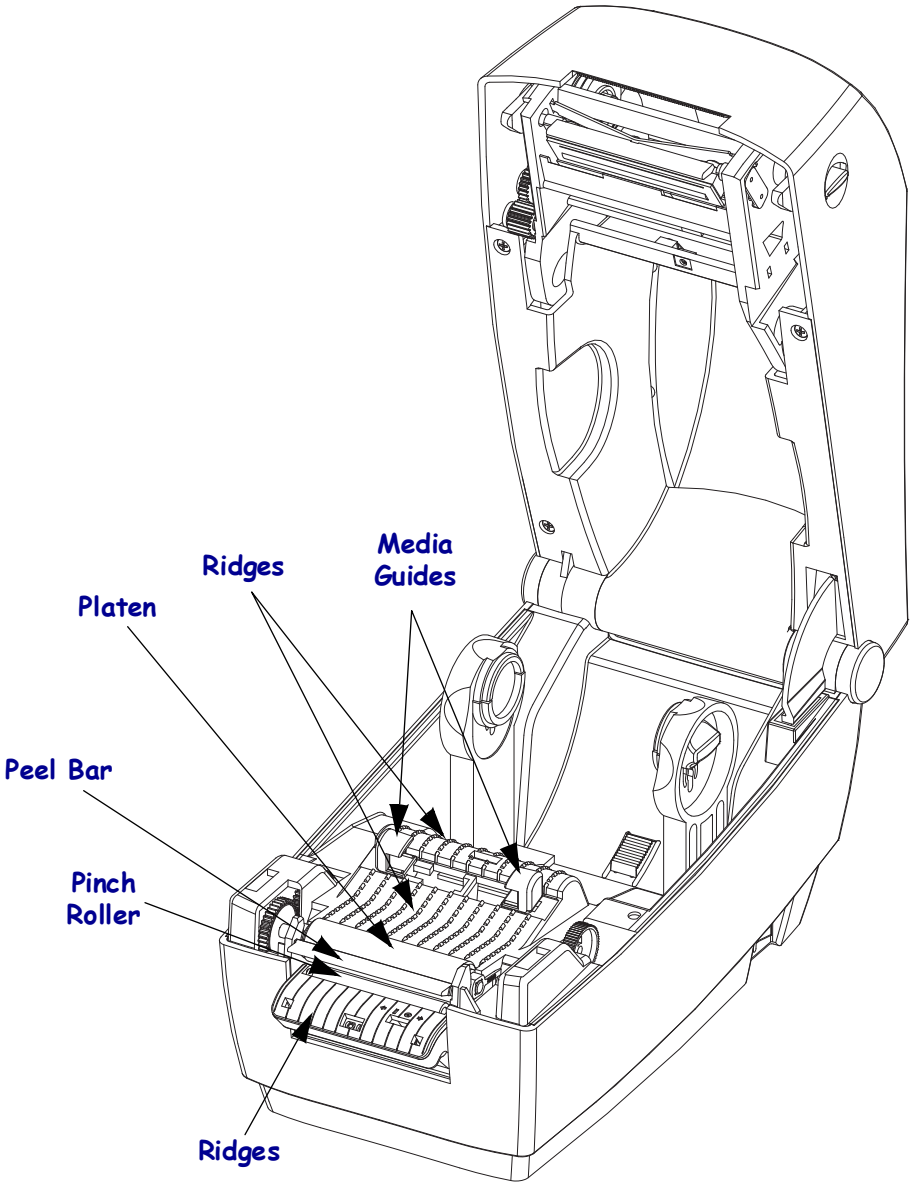

Sensor Cleaning

Dust can accumulate on the media sensors.

1. Gently brush away dust; if necessary, use a dry swab to brush away dust. If adhesives or other contaminates remain, use an alcohol moistened swab to break it up.
2. Use a dry swab to remove any residue that may be left from the first cleaning.
3. Repeat steps 1 and 2 as required until all residue and streaks are removed from the sensor.

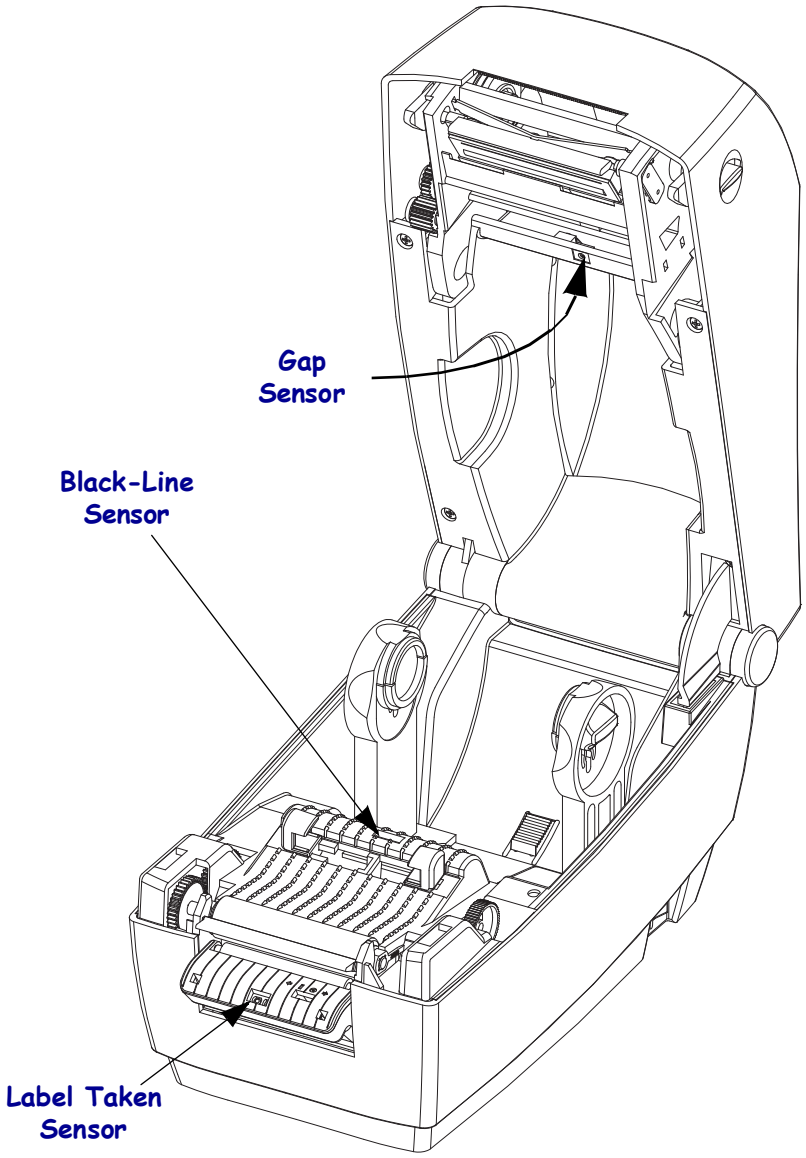

Platen Cleaning and Replacement

The standard platen (drive roller) normally does not require cleaning. Paper and liner dust can accumulate without effecting print operations. Contaminates on the platen roller can damage the printhead or cause the media to slip or stick when printing. Adhesive, dirt, general dust, oils and other contaminates should be cleaned immediately off the platen.

Clean the platen (and media path) whenever the printer has significantly poorer performance, print quality or media handling. The platen is the print surface and drive roller for your media. If sticking or jamming continues even after cleaning, you must replace the platen.

The platen can be cleaned with a fiber-free swab (such as a Texpad swab) or a lint free, clean, damp cloth very lightly moistened with medical grade alcohol (90% pure or better).

1. Open the cover (and dispenser door). Remove media from platen area.
2. Pull the platen bearing latch release tabs on the right and left sides out and then rotate the arms straight up towards the front of the printer.

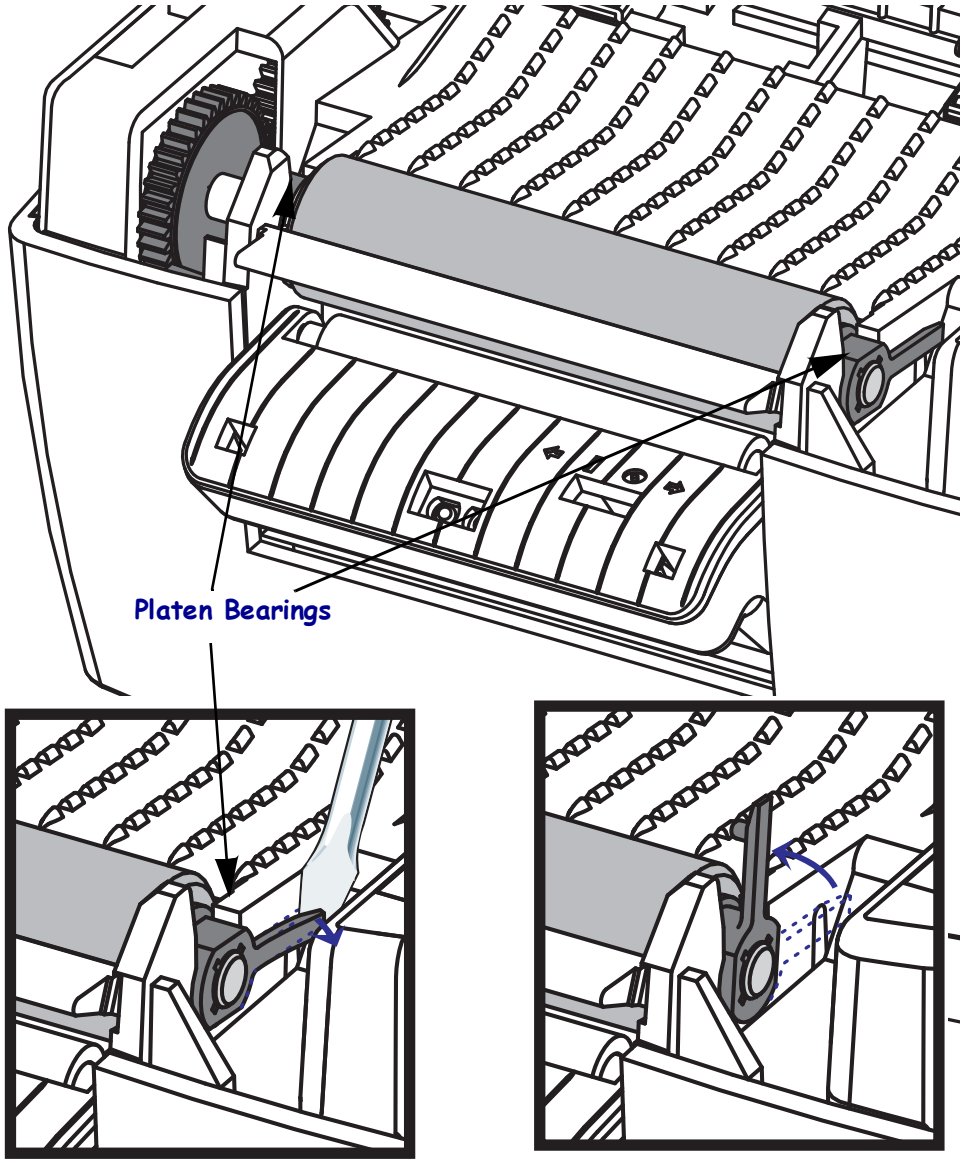

3. Lift the platen out of the printer's bottom frame.

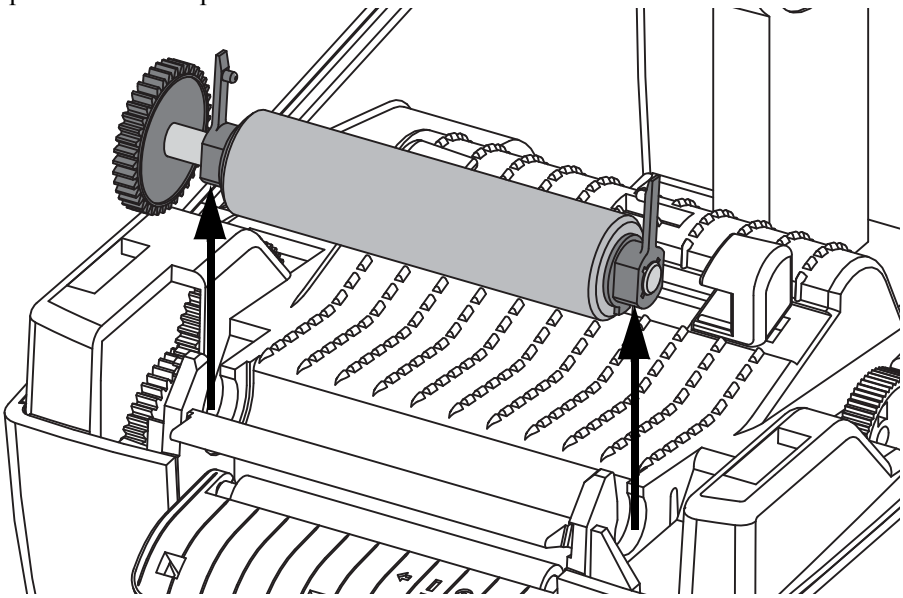

4. Clean the platen with the alcohol moistened swab. Clean from the center out. Repeat this process until the all of the roller surface has been cleaned. If there has been heavy adhesive build-up or label jam, repeat with a new swab to remove residual contaminates. Adhesives and oils, for example, may be thinned by the initial cleaning but not completely removed.

5. Install the platen in the printer. Discard the cleaning swabs after use - do not reuse.

6. Make sure the bearings and drive gear are on the shaft of the platen.

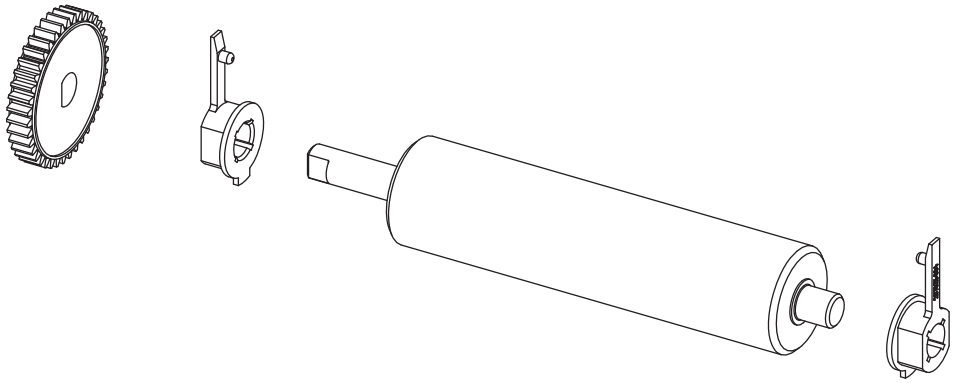

7. Align the platen with the gear to the left and lower it into the printer's bottom frame.

8. Rotate the platen bearing latch release tabs down on the right and left sides towards the rear of the printer and snap them into place. Allow the printer to dry for one minute before closing the dispenser door, media cover or loading labels.

Other Printer Maintenance

There are no user level maintenance procedures beyond those detailed in this section. See the *Troubleshooting* on page 73 for more information on diagnosing printer and print problems.

Replacing the Printhead

If you need to replace the printhead, read the procedure and review the removal and installation steps before actually replacing the printhead.

Caution • Prepare your work area by protecting against static discharge. Your work area must be static-safe and include a properly grounded conductive cushioned mat to hold the printer and a conductive wrist strap for yourself.

Caution • Turn the printer power off and unplug the power cord before replacing the printhead.

Printhead Removal

1. Open the printer. Remove any transfer ribbon from the printer.
2. Grasp the printhead spring and pull it to the left; then, slide it free of the carriage.

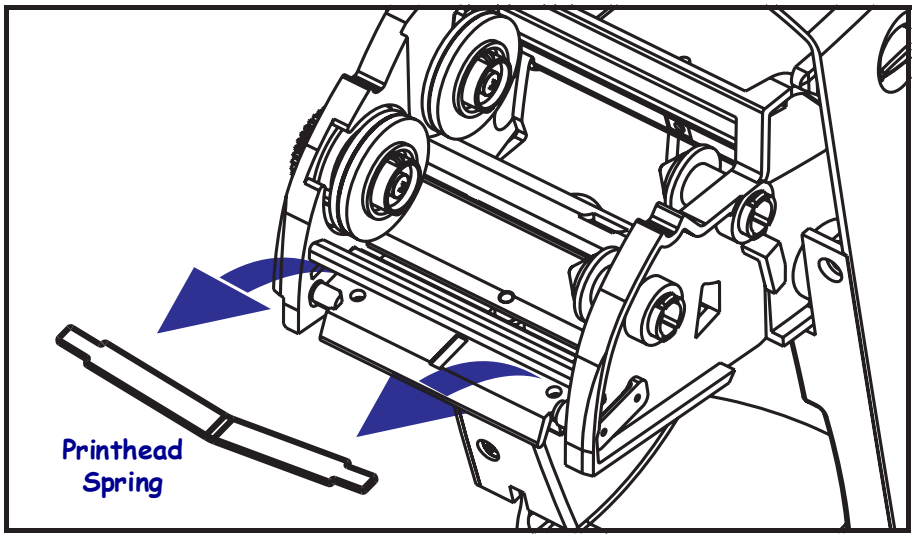

3. Use the spring to pry the printhead clip off the right side of the carriage.

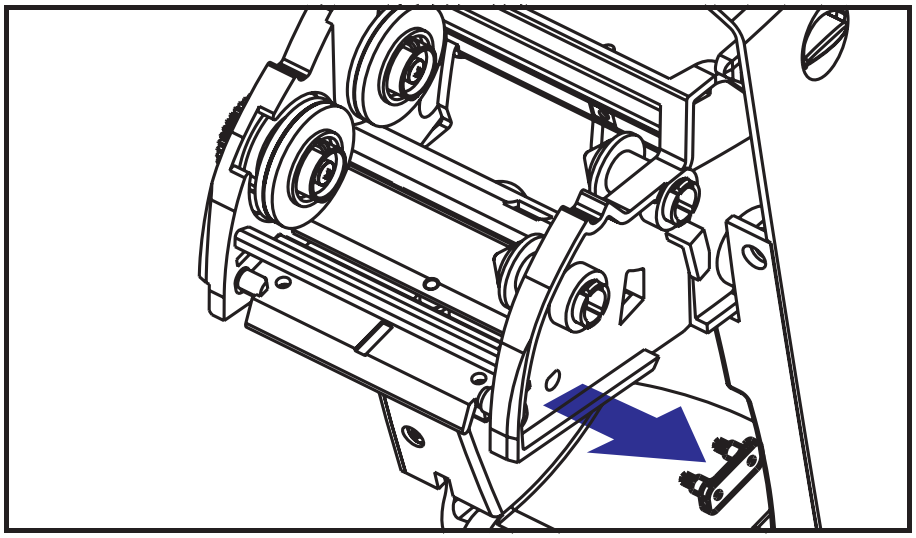

4. Pull the printhead and bracket forward.

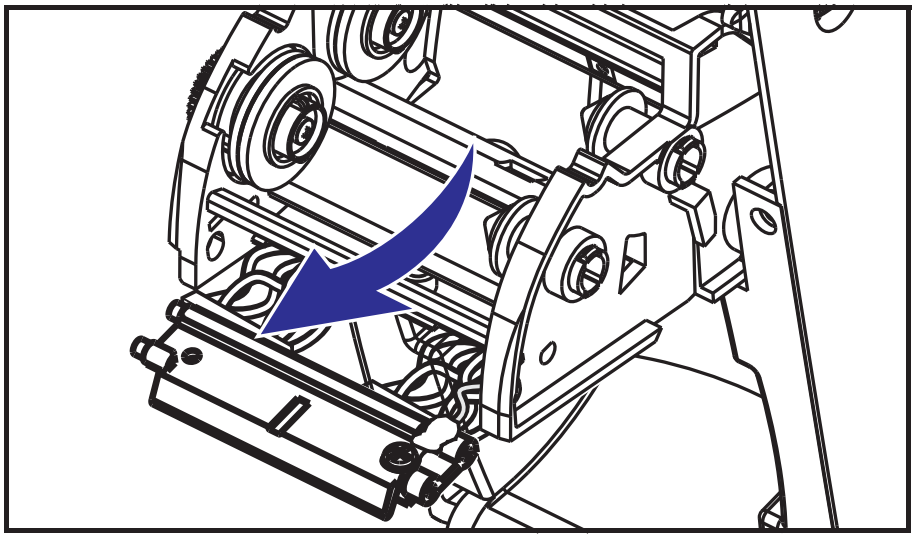

5. Use a #2 Phillips driver to remove the screw that holds the ground wire.

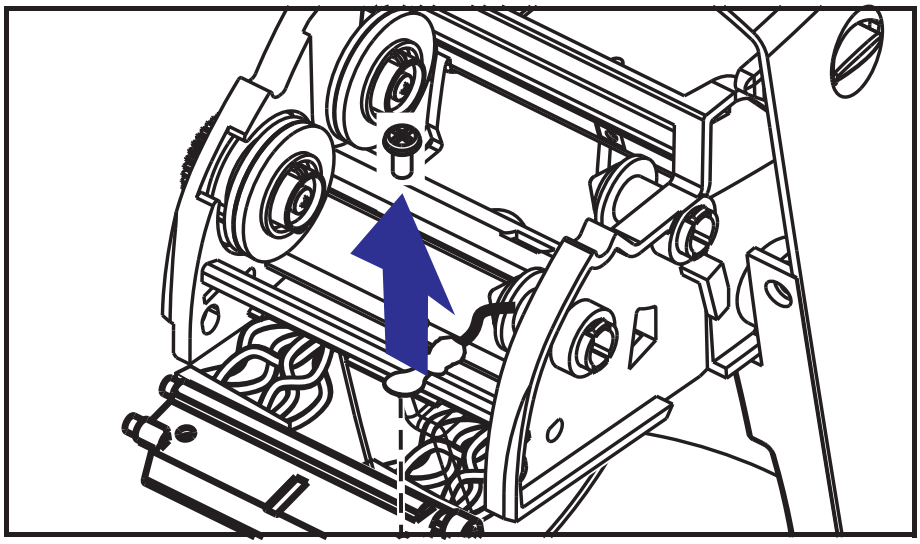

6. Gently but firmly pull the two printhead cable bundles' connectors off of the printhead.

Replacing the Printhead

1. Detach the wire cover.
2. Detach the ribbon take-up hub and spring.
3. Align the printhead and bracket to plug the left and right connectors into the black and white wire bundles.
4. Attach the ground wire and secure it with the screw. Use a #2 Phillips driver to tighten it.
5. Insert the bracket pegs into the left side of the carriage.
6. Align the right side of the bracket and insert the printhead clip through the right side of the ribbon carriage into the bracket.
7. Slip the left end of the print head spring into the left side of the ribbon carriage; then slide the right end into the other side. The angle of the "v" fits into the indent on top of the printhead bracket.
8. Attach the wire cover.
9. Attach the ribbon take-up hub and spring.
10. Verify that the printhead moves up and down freely when pressure is applied and remains locked when released.

11. Clean the printhead. Use a new pen to wipe body oils (finger prints) and debris off the printhead. Clean from the center of the printhead to the outside. See *Cleaning the Printhead* on page 63.

12. Reload media and ribbon. Plug in the power cord, turn on the printer and print a status report to ensure proper function. See *Printing a Test (Printer Configuration) Label* on page 23.

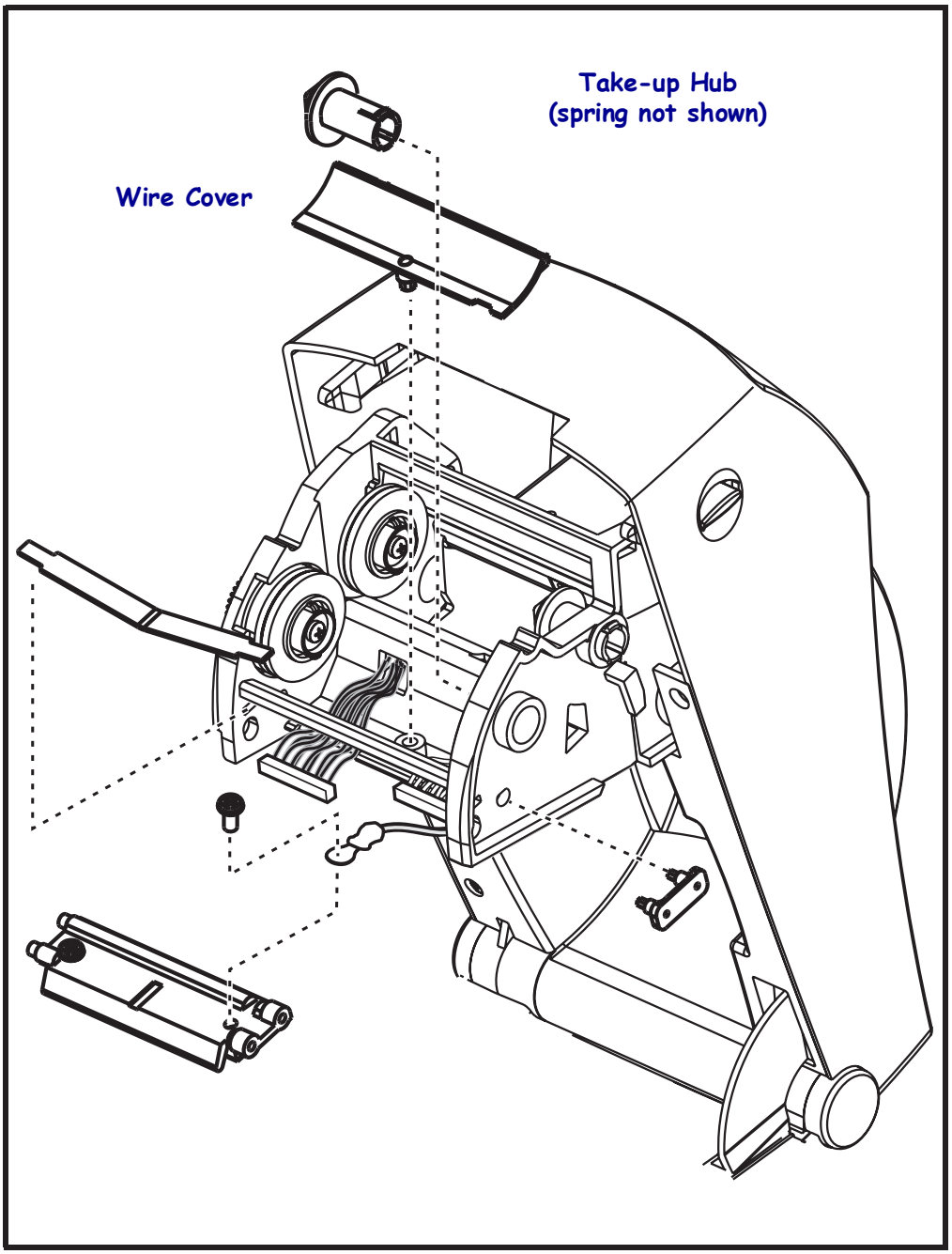

Notes •

6

Troubleshooting

This section provides information about printer error reporting that you might need for printer troubleshooting. Assorted diagnostic tests are included.

Contents

Status Light Descriptions 74
Status Light Error Resolutions 75
Print Quality Problems 77
Manual Calibration 80
Troubleshooting Tests 81
Resetting the Factory Default Values 82
Communications Diagnostics 82
Feed Button Modes 84
Using the Printer's Reset Button 86

Status Light Descriptions

What the Status Light is Telling You		
LED Status and Color	**Printer Status**	**For a Resolution, Refer to Number:**
Off	Off	1
Solid Green	On	2
Solid Amber	Stopped	3
Flashing Green	Normal Operation	4
Flashing Red	Stopped	5
Double Flashing Green	Paused	6
Flashing Amber	Paused	7
Alternately Flashing Green and Red	Needs Service	8
Flashing Red, Red and Green	Needs Service	9
Flashing Red, Amber Green (* - Do NOT reset or turn off power!)	Memory Defragmentation	10*

Status Light Error Resolutions

1. The printer is not receiving power.

- Have you turned on the printer power?
- Check power connections from the wall outlet to the power supply, and from the power supply to the printer. Check the power supply's power indicator light. See *Attaching Power* on page 12.
- Disconnect the printer from the wall outlet for 30 seconds and then reconnect the printer to the wall outlet.

2. The printer is on and in an idle state.

No action necessary.

3. The printer has failed its power on self test (POST).

- If this error occurs right after you turn on the printer, contact an authorized reseller for assistance. When the printer is operating normally, the printer status light will be amber for about 10 seconds before turning green (solid or blinking).

There is a memory error.

- If this error occurs after you have been printing, turn the printer power off and on, and then resume printing.

The printhead needs to cool down.

- If this error continues, turn the printer power off for five minutes or more, and then turn on. If the amber light persists, then the printer requires service.

4. The printer is receiving data.

- As soon as all of the data has been received, the status LED will turn green and the printer will automatically resume operation.

5. The media is out.

- Follow the instructions for *Loading Roll Media* on page 13 in the Getting Started section, and then press the Feed button to resume printing.

The ribbon is out.

- The printer has sensed the end of the ribbon roll. Replace the ribbon.

The printhead is open.

- Close the top cover and then press the Feed button to resume printing.

6. The printer is paused.

- Press the Feed button to resume printing.

7. The printhead is over temperature.

- Printing will stop until the printhead cools to an acceptable printing temperature. When it does, the printer will automatically resume operation.

8. FLASH memory is not programmed.

- Return the printer to an authorized reseller.

9. The printhead or motor has had a critical failure.

- Return the printer to an authorized reseller.

10. The printer is defragmenting memory.

Caution • Do NOT turn off the printer power during defragmentation. Doing so can damage the printer.

- Defragmentation is a normal operation of the printer – necessary to manage the memory space for optimal use. The printer will defragment its memory both after a factory default and when the printer detects that a defragment is required.

  When the printer is in this condition, allow it to finish defragmenting. If this warning occurs frequently, check the label formats. Formats that frequently and repeatedly write to and erase from memory my cause the printer to defragment often. Using formats that avoid frequent and repeated memory write/erase event will minimize the need for defragmentation.

- If this warning condition does not go away, contact Technical Support. The printer requires service.

Print Quality Problems

No print on the label.

- The media may not be direct thermal media when printing without ribbon (i.e. thermal transfer). See the test procedure *Determining Thermal Media Types* on page 35.
- For thermal transfer printers, the media may not be outside wound or approved for use in the 2824 Plus printer. See the following ribbon test procedures: *Ribbon Test with Adhesive* on page 38 and *Ribbon Scratch Test* on page 39.
- Is the media loaded correctly? Follow the instructions for *Loading Roll Media* on page 13 in the Getting Started section. For printing using transfer ribbon, see *Loading Transfer Ribbon* on page 19.

The printed image does not look right.

- The printhead is dirty. Clean the printhead.
- The printhead is under temperature.
- Adjust the print darkness and/or print speed.
  - Use the **^PR** (speed) and **~SD** (darkness) commands referenced in the ZPL Programming Guide.
  - Use the **D** (darkness/density) and **S** (speed) commands in the *EPL Programmer's Guide*.
  - Manually adjust print darkness with the six-flash sequence of *Feed Button Modes* on page 84.
  - The Windows printer driver or application software may change these settings and may require a change to optimize print quality.
- The media being used is incompatible with the printer. Be sure to use the recommended media for your application, and always use Zebra-approved labels and tags.
- The printhead has worn out. The printhead is a consumable item and will wear out due to friction between the media and printhead. Using unapproved media may shorten life or damage your printhead. Replace the printhead.
- The platen may need cleaning or replacement. The platen (driver) roller maybe losing traction due to:
  - Foreign objects attached to its surface,
  - The rubbery smooth surface has become polished and slippery, or
  - There is damage to the normally smooth and flat print surface such as box knife cuts.

There are long tracks of missing print (blank vertical lines) on several labels.

- The printhead is dirty. Clean the printhead.
- The printhead elements are damaged.

The printing does not start at the top of the label or misprinting of one to three labels.

- The media may not be threaded correctly. Follow the instructions for *Loading Roll Media* on page 13 in the Getting Started section.
- The printer needs to be calibrated. Refer to the two-flash sequence of *Feed Button Modes* on page 84 in this section.
- ZPL Label Formats - The correct media sensor may not be activated. Manual calibration selects the media sensing method for the labels being used (refer to the **^MN** command in the *ZPL Programming Guide*).
- ZPL Label Formats - Verify that the Label Top (**^LT**) command is correctly set for your application (consult the *ZPL Programming Guide*).
- EPL Label Formats - The correct media sensor may not be activated for label dispensing, blackline or notch sensing, or for Gap/Web sensing. Manual calibration selects the media sensing method for the labels being used (refer to the **O** and **Q** commands in the EPL *Programmer's Guide*).
- EPL Label Formats - Verify that the Set Label Length (**Q**) command is correctly set for your application (consult the *EPL Programmer's Guide*).

A ZPL label format was sent to, but not recognized by, the printer.

- Is the printer in pause mode? If so, press the Feed button.
- If the status LED is on or flashing, refer to *What the Status Light is Telling You* on page 74.
- Make sure the data cable is correctly installed.
- A communications problem has occurred. First, make sure that the correct communications port on the computer is selected. Refer to *Installing Printer Drivers and Communicating with the Printer* on page 30 in the Getting Started section.
- Verify the correct Format and Control Prefix on the printer match what you are using in your ZPL programmed label format. The default Format (COMMAND CHAR) is Caret (^) character and the Control (CONTROL CHAR) is a Tilde (~) character. Verify the characters with the Configuration Status label printout. Refer to the one-flash sequence of *Feed Button Modes* on page 84 to print this label.

A EPL label format was sent to, but not recognized by, the printer.

- Is the printer in pause mode? If so, press the Feed button.
- If the printer has label dispensing enabled, the printer may be waiting for the label to be removed. The liner/web must be properly threaded through the label dispenser mechanism (peeler) to correctly operate in label dispense mode, refer to *Label Dispenser Option* on page 46.
- If the status LED is on or flashing, refer to *What the Status Light is Telling You* on page 74.
- Make sure the data cable is correctly installed.
- A communications problem has occurred. First, make sure that the correct communications port (USB) on the computer is selected. Refer to *Installing Printer Drivers and Communicating with the Printer* on page 30 in the Getting Started section.

Manual Calibration

Manual calibration is recommended whenever you are using pre-printed media or if the printer will not correctly auto calibrate.

1. Make sure media is loaded.
2. Turn on the printer power.
3. Press and hold the Feed button until the green status light flashes once, then twice and then continuing until the flash groups reach the group of seven flashes. Release the Feed button.
4. The printer will set the media sensor for the label backing being used. After it is done making this adjustment, the roll will automatically feed until a label is positioned at the printhead. A profile of the media sensor settings (similar to the example below) will print. Upon completion, the printer will save the new settings in memory and the printer is ready for normal operation.
5. Press the Feed button. One entire blank label will feed. If this does not happen, try defaulting (refer to the four-flash sequence in "Feed Button Modes" later in this chapter) and recalibrating the printer.

Note • Performing a manual calibration disables the auto calibration function. To return to auto calibration, default the printer (refer to the four-flash sequence in *Feed Button Modes* on page 84 in this section).

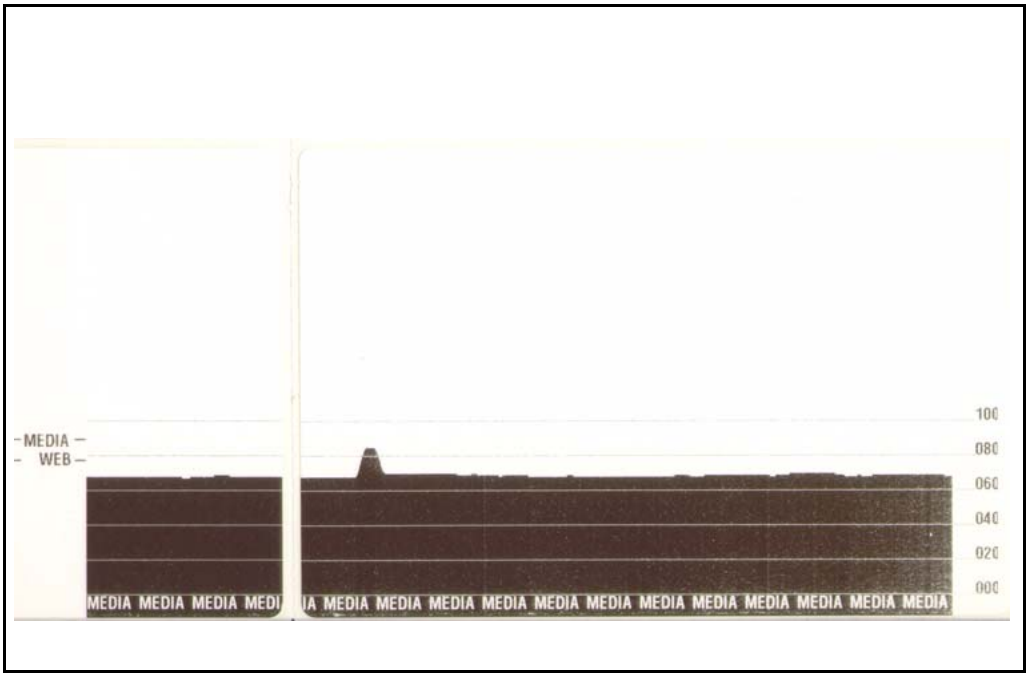

Troubleshooting Tests

Printing a Configuration Label

To print out a listing of the printer's current configuration, refer to the one-flash sequence in *Feed Button Modes* on page 84 in this section

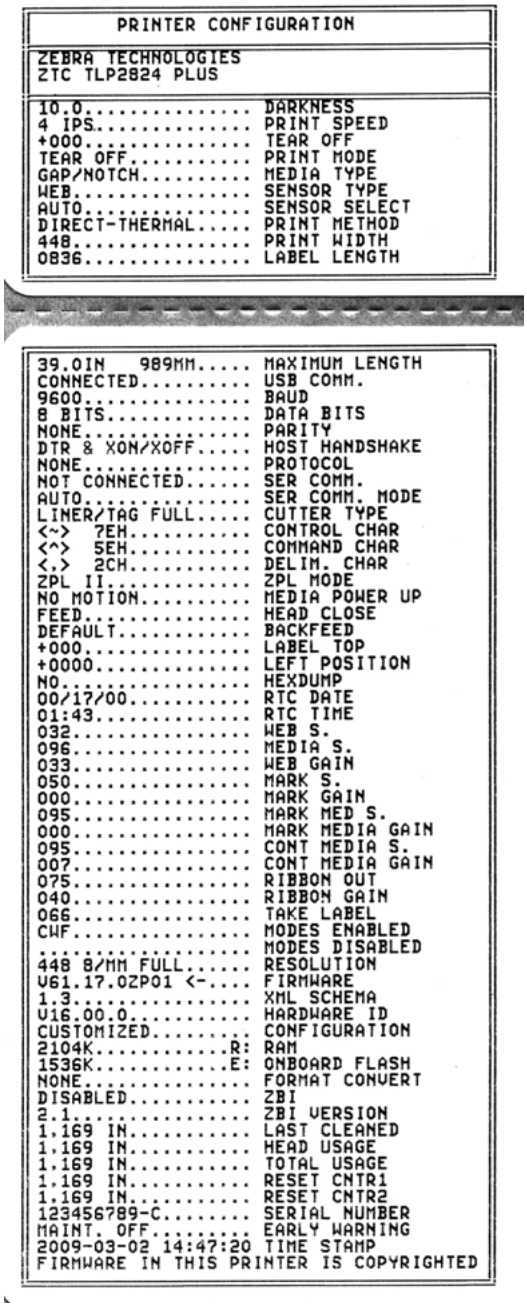

```
        PRINTER CONFIGURATION

ZEBRA TECHNOLOGIES
ZTC TLP2824 PLUS

10.0............... DARKNESS
4 IPS.............. PRINT SPEED
+000............... TEAR OFF
TEAR OFF........... PRINT MODE
GAP/NOTCH.......... MEDIA TYPE
WEB................ SENSOR TYPE
AUTO............... SENSOR SELECT
DIRECT-THERMAL..... PRINT METHOD
448................ PRINT WIDTH
0836............... LABEL LENGTH

39.0IN   989MM..... MAXIMUM LENGTH
CONNECTED.......... USB COMM.
9600............... BAUD
8 BITS............. DATA BITS
NONE............... PARITY
DTR & XON/XOFF..... HOST HANDSHAKE
NONE............... PROTOCOL
NOT CONNECTED...... SER COMM.
AUTO............... SER COMM. MODE
LINER/TAG FULL..... CUTTER TYPE
<~>  7EH........... CONTROL CHAR
<^>  5EH........... COMMAND CHAR
<,>  2CH........... DELIM. CHAR
ZPL II............. ZPL MODE
NO MOTION.......... MEDIA POWER UP
FEED............... HEAD CLOSE
DEFAULT............ BACKFEED
+000............... LABEL TOP
+0000.............. LEFT POSITION
NO................. HEXDUMP
00/17/00........... RTC DATE
01:43.............. RTC TIME
032................ WEB S.
096................ MEDIA S.
033................ WEB GAIN
050................ MARK S.
000................ MARK GAIN
095................ MARK MED S.
000................ MARK MEDIA GAIN
095................ CONT MEDIA S.
007................ CONT MEDIA GAIN
075................ RIBBON OUT
040................ RIBBON GAIN
066................ TAKE LABEL
CWF................ MODES ENABLED
................... MODES DISABLED
448 8/MM FULL...... RESOLUTION
V61.17.0ZP01 <-.... FIRMWARE
1.3................ XML SCHEMA
V16.00.0........... HARDWARE ID
CUSTOMIZED......... CONFIGURATION
2104K.............R: RAM
1536K.............E: ONBOARD FLASH
NONE............... FORMAT CONVERT
DISABLED........... ZBI
2.1................ ZBI VERSION
1,169 IN........... LAST CLEANED
1,169 IN........... HEAD USAGE
1,169 IN........... TOTAL USAGE
1,169 IN........... RESET CNTR1
1,169 IN........... RESET CNTR2
123456789-C........ SERIAL NUMBER
MAINT. OFF......... EARLY WARNING
2009-03-02 14:47:20 TIME STAMP
FIRMWARE IN THIS PRINTER IS COPYRIGHTED
```

Recalibration

Recalibrate the printer if it starts to display unusual symptoms, such as skipping labels. Refer to the two-flash sequence in *Feed Button Modes* on page 84 in this section.

Resetting the Factory Default Values

Sometimes, resetting the printer to the factory defaults may solve some problems. Refer to the four-flash sequence in *Feed Button Modes* on page 84 in this section.

Communications Diagnostics

If there is a problem transferring data between the computer and printer, try putting the printer in the communications diagnostics mode. The printer will print the ASCII characters and their respective hexadecimal values (a sample is shown below) for any data received from the host computer. To find out how,

There are multiple ways to enter hex data dump mode:

- The **~JD** ZPL command
- The **dump** EPL command
- On power up with the Feed button pressed. Refer to the power off mode procedure in *Feed Button Modes* on page 84 in this section.

The printer will print 'Now in DUMP' (see below) and advance to the top of the next label.

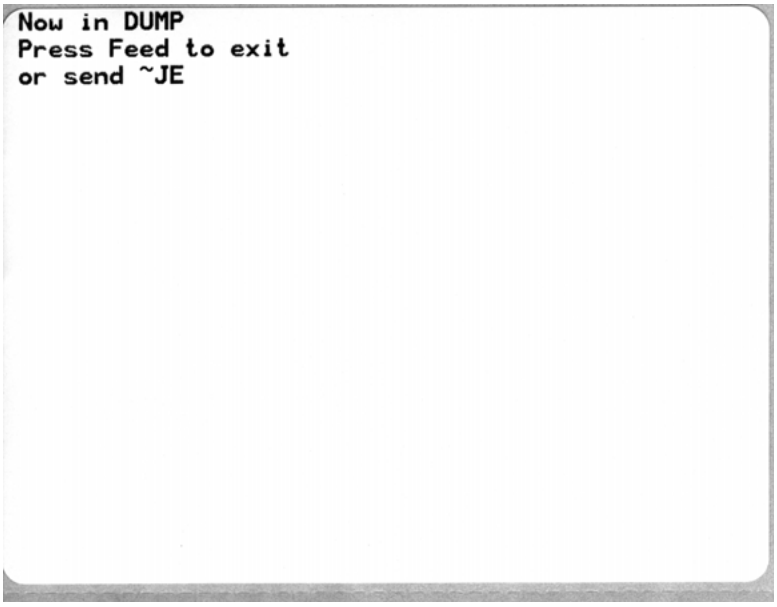

The following example of a communications DUMP mode printed out. The printout displays hexadecimal data 00h-FFh (0-255 decimal) with a unique character for each hexadecimal value displayed above the hexadecimal data.

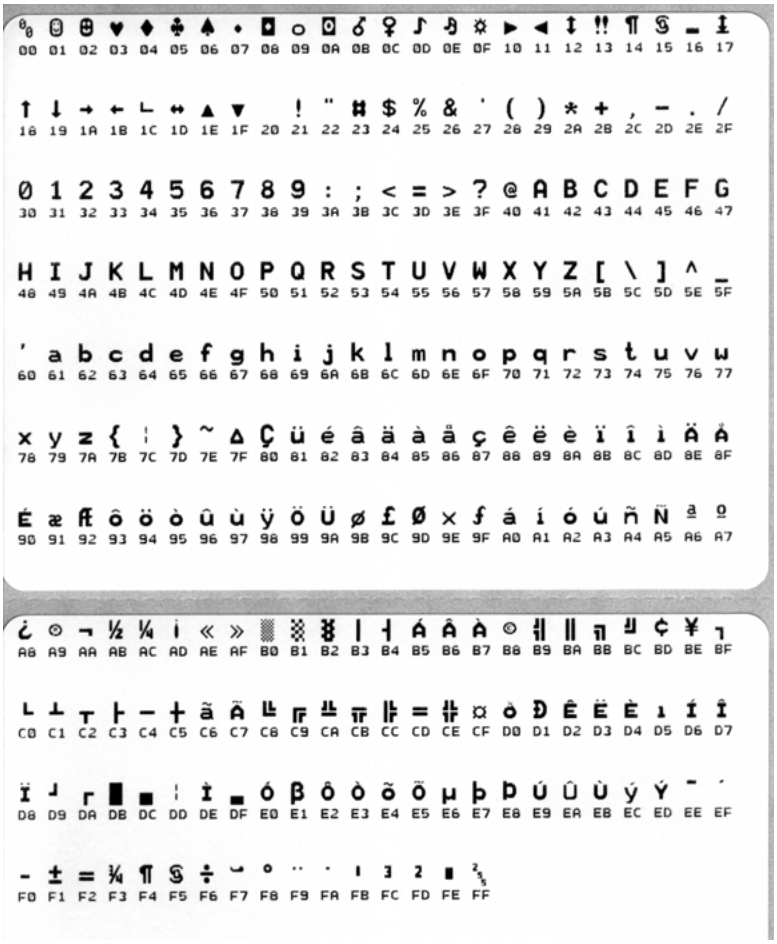

The blank lines between the lines of data are where serial port and Bluetooth data handling errors get logged. The errors are:

- F = Frame Error
- P = Parity Error
- N = Noise Error
- O = Data Overrun Error

To exit the diagnostic mode and resume printing, turn off and then turn on the printer. An alternate method for exiting the diagnostic mode is to press the Feed button as many times as it takes to clear the printer's command buffer and print 'Out of DUMP' on the label.



Feed Button Modes

Power Off Mode (Communications Diagnostics Mode)	
With the printer power off, press and hold the Feed button while you turn on the power.	
Flash Sequence	**Action**
Rapid Red Flashing	**Firmware Download Mode** - The printer starts rapidly flashing red to denote entry into the Firmware Download mode. Releasing the Feed button here will start initializing the printer for download. The printer is ready to start downloading firmware when the status light begins to slowly flash between red and green. See *Sending Files to the Printer* on page 44 for more information on using the Firmware (and File) Download utility available for use with this printer. Firmware updates for your printer, if available, are posted on the Zebra on our web site at: www.zebra.com
Amber	**Normal Operations Mode** - The printer continues into a normal printer initialization. Releasing the Feed button here will allow the printer to start normally without firmware download or operating in communications diagnostics mode.
Green	**Communications Diagnostic (Dump) Mode** - Release the Feed button immediately after the printer status light turns green. The printer will print 'Now in DUMP' at the top of the label and then advance to the next label. After printing the first label, the printer will automatically enter into diagnostic mode in which the printer prints out a literal representation of all data subsequently received. *To exit the diagnostic mode and resume printing, turn off and then turn on the printer. An alternate method for exiting the diagnostic mode is to press the Feed button as many times as it takes to clear the printer's command buffer and print 'Out of DUMP' on the label.*

Power On Modes	
With the printer power on and top cover closed, press and hold the Feed button for several seconds. The green status LED will flash a number of times in sequence. The explanation at the right (Action) shows what happens when you release the key after the start specific number of flashes and before the next flash sequence starts.	
Flash Sequence	**Action**
*	**Configuration Status** - Prints a detailed printer configuration status label. The label can be used to verify printing, assist printer to computer communication configuration, maintenance, troubleshooting, and help us with customer care communications.
* **	**Standard Media Calibration** - The printer detects and sets media type and media length, and it adjusts the media sensors for optimal performance with the installed media. The printer will feed one to four labels. *Note: Users familiar with the Zebra EPL desktop printer use this Feed mode to replace power-up AutoSensing calibration.*
* ** ***	**Serial Port Configuration** - *Applies only to printers with serial interface ports.* To reset the communication parameters. Press and release the Feed button while the LED rapidly flashes amber and green. For autobaud synchronization: Send the **^XA^XZ** command sequence to the printer while the LED rapidly flashes amber and green. When the printer and host are synchronized, the LED changes to solid green. NOTE: No labels will print during autobaud synchronization.
* ** *** ****	**Factory Defaults** - Resets the printer to the default factory settings and modes. See the configuration label for a list of the primary settings affected by this Feed Mode option. Other settings are exclusively set, viewed and controlled by programming are also reset. The printer then performs a standard media calibration. Once the printer has entered the Factory Default mode, the status light will turn amber for three (3) seconds. During that time you may do two things: Do nothing and the printer will reset the factory defaults automatically as described above OR press and hold the feed button to enter a factory default reset modes for printers with a network printer option. Releasing the button after the first flash resets the network factory options only. Releasing the button after the second flash sequence (two flashes) will reset the printer defaults only. Releasing the button after the third flash sequence (three flashes) will reset both the printer and network settings.
* ** *** **** *****	**Print Width Adjustment** - Prints a succession boxes starting at the minimum print width and ending in the printer's maximum print width in 4mm increments. Press the Feed button once when the printer has reached the desired maximum print width. Note that the printer driver and applications can override this setting.
* ** *** **** ***** ******	**Print Darkness (Density) Adjustment** - Prints a succession of bar code simulation patterns starting at the minimum darkness (print density/heat) and ending in the printer's maximum darkness in increments of four (4) using the ZPL darkness setting range values. Press the Feed button once the pattern is clear and legible. Do not continue to increase the darkness setting. Bar code line widths may become distorted reducing readability. Note that the printer driver and applications can override this setting.
* ** *** **** ***** ****** *******	**Manual Media Calibration** - The printer runs extensive tests to detect and set media type and media length, and then it adjusts the media sensors for optimal performance with the installed media. Manual calibration is recommended whenever you are using pre-printed media, print on the liner or if the printer will not correctly auto calibrate. A graphical profile of the media sensing will print. See *Manual Calibration* on page 80 for more details and considerations.
If the Feed button remains pressed after a 8-flash sequence, the printer exits the configuration mode when the Feed button is released.	

Using the Printer's Reset Button

The printer's reset button can restore the printer or network (the internal print server) to factory default configuration.

By pressing and holding the reset button for one (1) or more seconds, the printer will enter a reset sequence and the status light will begin blinking every second until released. Releasing the button at the appropriate time tells the printer which reset function to perform.The table below describes the reset modes and sequence timing.

Table 2 •

Seconds	Description
0-1	No Action
1-5	Printer — The printer shall perform a factory default reset. Upon completion of the factory default reset the printer shall automatically print a configuration label and a network label (if present).
6-10	Network Option (Internal Print server) — the printer shall drop connection to the network and a network factory default reset shall occur. Upon completion of the network default reset the printer shall automatically print a configuration label and a network label. If no Ethernet is installed in the printer the printer shall perform no action if the button is pressed 5 or more seconds.
10 or more	Exits the reset factory defaults function without resetting the printer or changing the printer settings to the factory defaults.

In order to reset the printer and network using the reset button, you must perform two separate reset actions: a printer reset (press and hold the button 1-5 seconds) and a network reset (press and hold the button 6-10 seconds). See the *Feed Button Modes* on page 84 to reset both printer and it's print server at the same time using the 4-flash Feed Button mode.

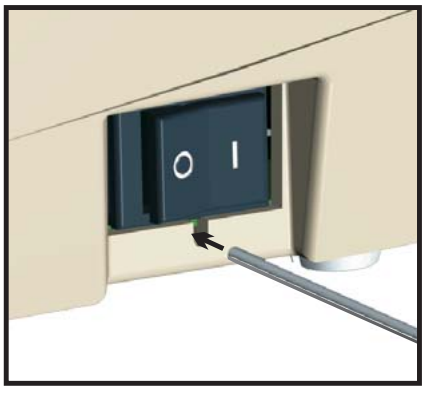



A

Appendix

This section provides printer interface connection information.

Contents

Universal Serial Bus (USB) Interface 88
Parallel Interface 89
Ethernet Interface. 90
Serial Port Interface 91

Universal Serial Bus (USB) Interface

The figure below displays the cable wiring required to use the printer's USB interface.

The printer requires cable or cable packaging that bears the "Certified USB™" mark to guarantee USB 2.0 compliance.

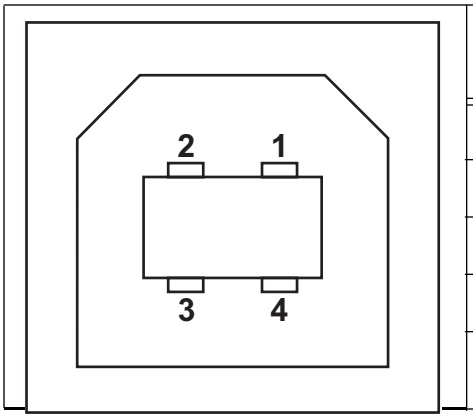

Pin	Signal
1	Vbus - N/C
2	D-
3	D+
4	Ground
Shell	Shield / Drain Wire

For printer supported operating systems and drivers, see the software and documentation CD or visit the Zebra printer web site at:

http://www.zebra.com

For information on the USB interface, go to the USB web site at:

http://www.usb.org

Parallel Interface

The printer's parallel interface uses the IEEE 1284-A to 1284-C parallel interface cables. the host connector has a DB-25 pin male connector. The printer connector is a Centronics style connector.

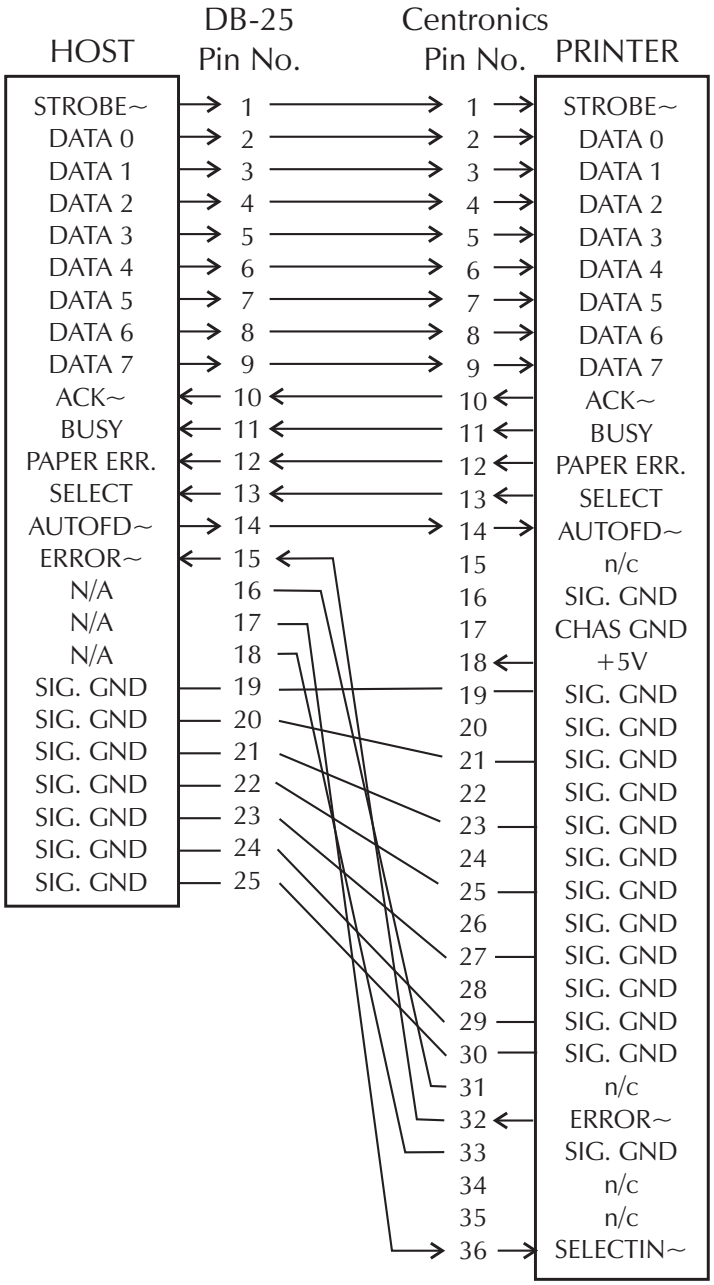

DB-25 to Centronics (Cable)

Ethernet Interface

This interface requires a UTP RJ45 Ethernet cable rated CAT-5 or better.

The table below provides the cable's pinout assignments.

Signal	Pin	Pin	Signal
Tx+	1	1	Tx+
Tx-	2	2	Tx-
Rx+	3	3	Rx+
—	4	4	—
—	5	5	—
Rx-	6	6	Rx-
—	7	7	—
—	8	8	—

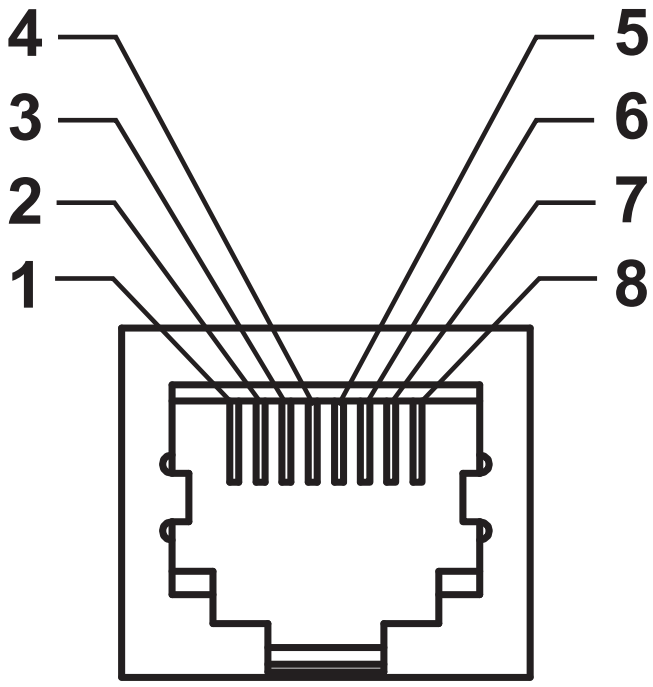

Serial Port Interface

Pin	Description
1	Not used
2	RXD (receive data) input to the printer
3	TXD (transmit data) output from the printer
4	DTR (data terminal ready) output from the printer -- controls when the host may send data
5	Chassis ground
6	DSR (data set ready) input to the printer
7	RTS (request to send) output from the printer -- always in the ACTIVE condition when the printer is turned on
8	CTS (clear to send) - Not used by the printer
9	+5 V @ 0.75 A fused

The maximum current available through the serial and/or parallel port is not to exceed a total of 0.75 Amps.

When XON/XOFF handshaking is selected, data flow is controlled by the ASCII control codes DC1 (XON) and DC3 (XOFF). The DTR control lead will have no effect.

Interconnecting to DTE Devices — The printer is configured as data terminal equipment (DTE). To connect the printer to other DTE devices (such as the serial port of a personal computer), use an RS-232 null modem (crossover) cable. Figure 31 shows the required cable connections.

Interconnecting to DCE Devices — When the printer is connected via its RS-232 interface to data communication equipment (DCE) such as a modem, a STANDARD RS-232 (straight-through) interface cable must be used. Figure 32 shows the connections required for this cable.

Connecting to the KDU (Keyboard Display Unit) — The KDU was designed for DCE printer connections and requires a Zebra custom serial port gender changing adapter. The KDU now includes the KDU adapter and the Zebra kit part number for the KDU Adapter is 105934-088.

Connecting the Printer to a DTE Device

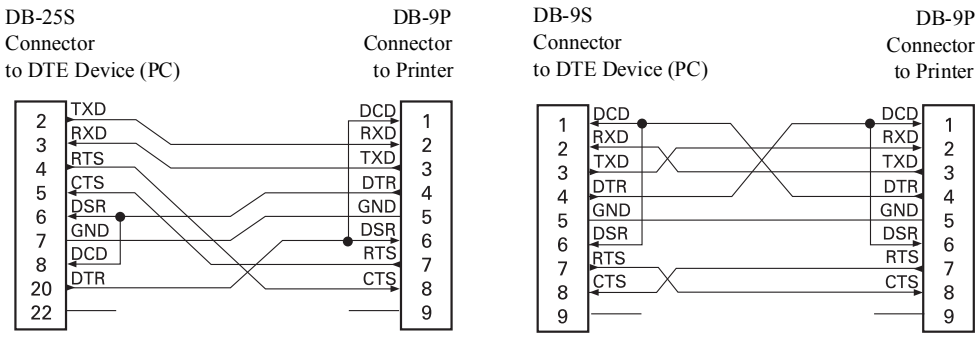

Connecting the Printer to a DCE Device

