LD292

FIELDBUS PRESSURE GAGE TRANSMITTER

FOUNDATION

Features

- 0 ~ 1.25 kPa to 0 ~ 25 MPa (0 ~ 5 in$H_2$0 to 0 ~ 3600 psi).
- ±0.1% accuracy of the calibrated range.
- Accepts calibration from URL to URL/40.
- Wetted parts in 316 SST or Hastelloy.
- Digital LCD display (optional).
- Configuration through FIELDBUS communication from a PC or by the local adjustment switches (should be used the display).
- Instantiation and deletion of function blocks.
- Digital electronics, sensor and communication.
- Self diagnostics.
- Weather proof, explosion proof and intrinsically safe.
- Network master capability.



The LD292 Fieldbus Pressure Gage Transmitter is the economical alternative in routine gage pressure measurement. This lightweight design eliminates the need for mounting brackets and transmitter supports in many applications.

The model LD292 offers digital FOUNDATION™ Fieldbus based communication simplifying calibration and providing remote diagnostics.

Its microprocessor-based electronics allow for total interchangeability with SMAR capacitive sensors. It automatically corrects sensor characteristic changes caused by temperature fluctuations.

All members of the LD292 series use SMAR's field proven capacitive sensors. Also, an optional LCD meter can be added to provide additional operations and local indication.

Technical Characteristics

Functional Specifications

Service	Liquid, gas or vapor application
Output	Digital only. FOUNDATION™ 31.25 kbit/s voltage mode with bus power.
Power Supply	Bus powered: 9 - 32 Vdc. Current consumption quiescent 12 mA.
Indicator	Optional 4½-digit numerical and 5-character alphanumerical LCD indicator.
Hazardous Area Certifications	Explosion proof, weather proof and intrinsically safe (CENELEC and FM standards pending).
Temperature Limits	Ambient: -40 to 85°C (-40 to 185°F). Process: -40 to 100°C (-40 to 212°F) (Silicone Oil). 0 to 85°C (-32 to 185°F) (Fluorolube Oil). Storage: -40 to 100°C (-40 to 212°F). Display: -10 to 60°C (14 to 140°F) operation. -40 to 85°C (-40 to 185°F) without damage.

Turn-on Time	Performs within specifications in less than 5,0 seconds after power is applied to the transmitter.
Overpressure Limits	14 MPa (2000 psi) for ranges 2, 3, 4 31 MPa (4500 psi) for range 5 These overpressures will not damage the transmitter, but a new calibration may be necessary.
Humidity Limits	0 to 100% RH.

Performance Specifications

Accuracy	± 0.1% of span (for span ≥ 0.1 URL). ± 0.05 (1 +(0.1 URL/span))% of span (for span < 0.1 URL). For Ranges 5: ± 0.2% of span (for span ≥ 0.1 URL). ± 0.1 (1 +(0.1 URL/span))% of span (for span < 0.1 URL).
Stability	±0.2% of URL for 1 year.
Temperature Effect	±(0.18% URL + 0.18% span) per 20°C (36°F).
Power Supply Effect	0.005% of calibrated span per volt.
Mounting Position Effect	Zero shift of up to 250 Pa (1 inH20) which can be calibrated out. No span effect.
Electro-Magnetic Effect	Designed to comply with IEC 801 and European standards EN50081 and EN50082.

Physical Specifications

Electrical Connection	½ -14 NPT, Pg 13,5 or M20 x 1,5.
Process Connection	½ -14 NPT (Female or Male), G ½ A DIN 16288 (Male).
Wetted Parts	Isolating Diaphragms and Process Connection 316L SST, Hastelloy C276.

Nonwetted Parts	Electronic Housing: Injected aluminum with polyester painting or 316 SST (NEMA 4X, IP67).
Fill Fluid	Silicone or Fluorolube Oil.
Cover O-Rings	Buna N.
Mounting Bracket	Optional universal mounting bracket for surface or vertical/horizontal 2"-pipe (DN 50) carbon steel with polyester painting or 316 SST. Accessories (bolts, nuts, washers and U-clamp) in carbon steel or 316 SST.
Identification Plate	316 SST.
Approximate Weights	< 2.0 kg (4lb): aluminum housing without mounting bracket.

Ordering Code

MODEL LD292 — **FIELDBUS PRESSURE GAGE TRANSMITTERS**

CODE	Range									
M2	Gage	1.25	to	50	kPa	5	to	200	inH_2O
M3	Gage	6.25	to	250	kPa	25	to	1000	inH_2O
M4	Gage	62.5	to	2500	kPa	9	to	360	psi
M5	Gage	0.625	to	25	MPa	90	to	3600	psi

CODE	Diaphragm Material	Fill Fluid (Low Side)	Process Connection Material
1I	316L SST	Silicone Oil	316L SST
2I	316L SST	Fluorolube Oil	316L SST
3H	Hastelloy C276	Silicone Oil*	Hastelloy C276*
4H	Hastelloy C276	Fluorolube Oil*	Hastelloy C276*
Z	Others - Specify		

CODE	Local Indicator
0	Without Indicator
1	Without Digital Indicator

CODE	Process Connections
1	1/2 - 14 NPT- Female
G	G 1/2 A DIN 16288 Form B - Male
H	G 1/2 DIN 16288 Form D - Male
M	1/2 - 14 NPT - Male
Z	Others - Specify

CODE	Electrical Connections
0	1/2-14 NPT
A	M20 x 1,5
B	Pg 13,5 DIN

CODE	Mounting Bracket
0	Without Mounting Bracket
1	Carbon Steel Mounting Bracket with Carbon Steel accessories
2	316 SST Mounting Bracket with 316 SST accessories
7	Carbon Steel Mounting Bracket with 316 SST accessories
Z	Others - Specify

CODE	Optional Items **
H1	316 SST Housing
ZZ	Special Options - Specify

LD292	–	M2	1I	0	–	1	A	–	0	**

◀ TYPICAL MODEL NUMBER

* Meets NACE material recommendations per MR-01-75.
** Leave it blank for no optional items.

Dimensions

Dimensions are mm (in)

Female

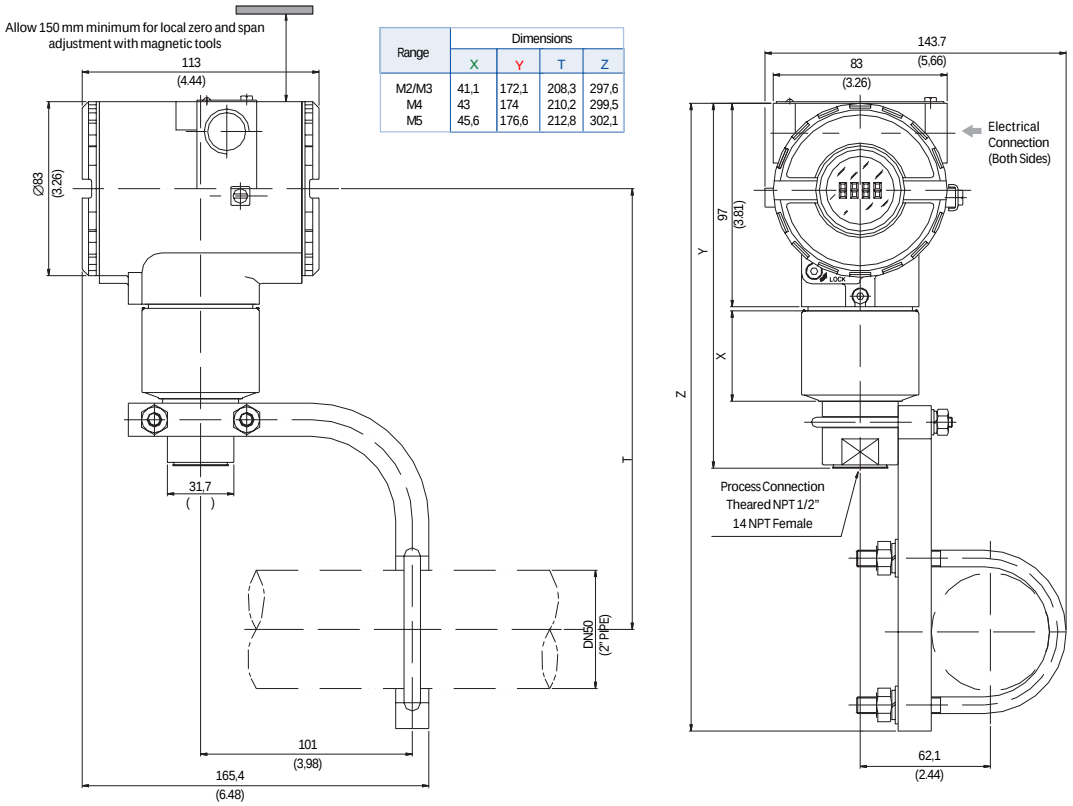

Range	Dimensions			
	X	Y	T	Z
M2/M3	41,1	172,1	208,3	297,6
M4	43	174	210,2	299,5
M5	45,6	176,6	212,8	302,1

Male

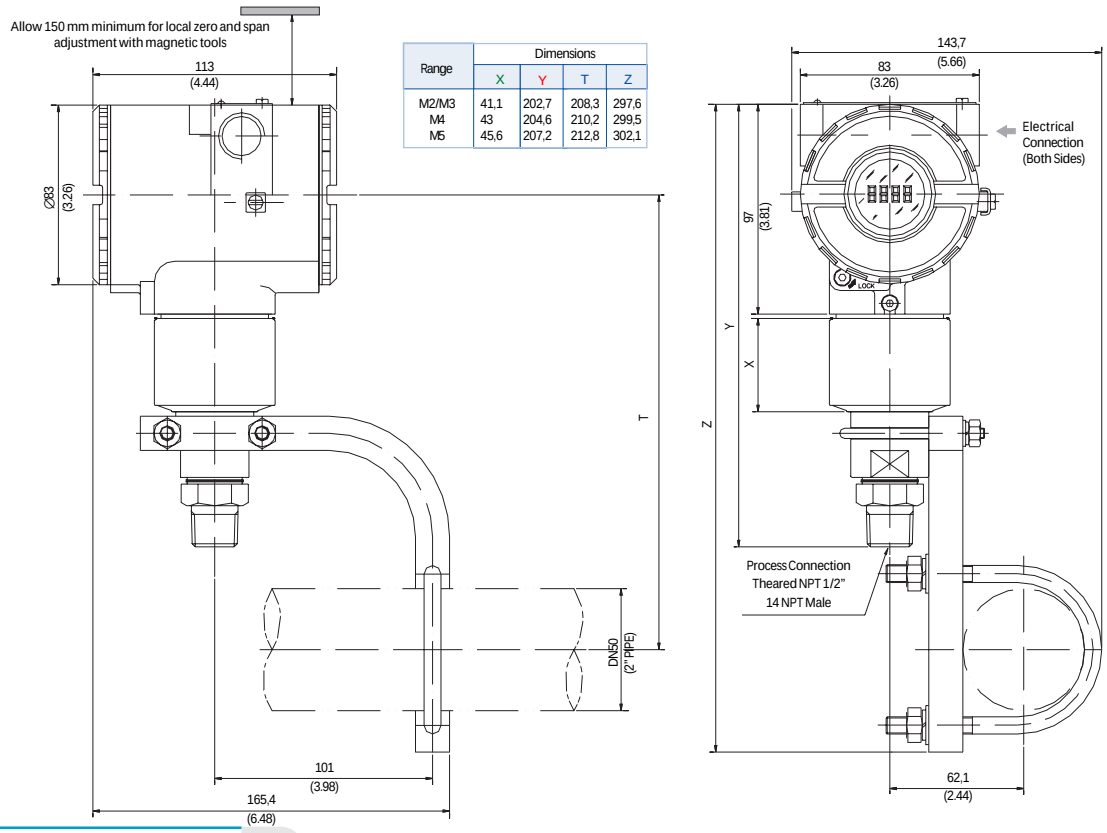

Range	Dimensions			
	X	Y	T	Z
M2/M3	41,1	202,7	208,3	297,6
M4	43	204,6	210,2	299,5
M5	45,6	207,2	212,8	302,1

Dimensions are mm (in)

Male

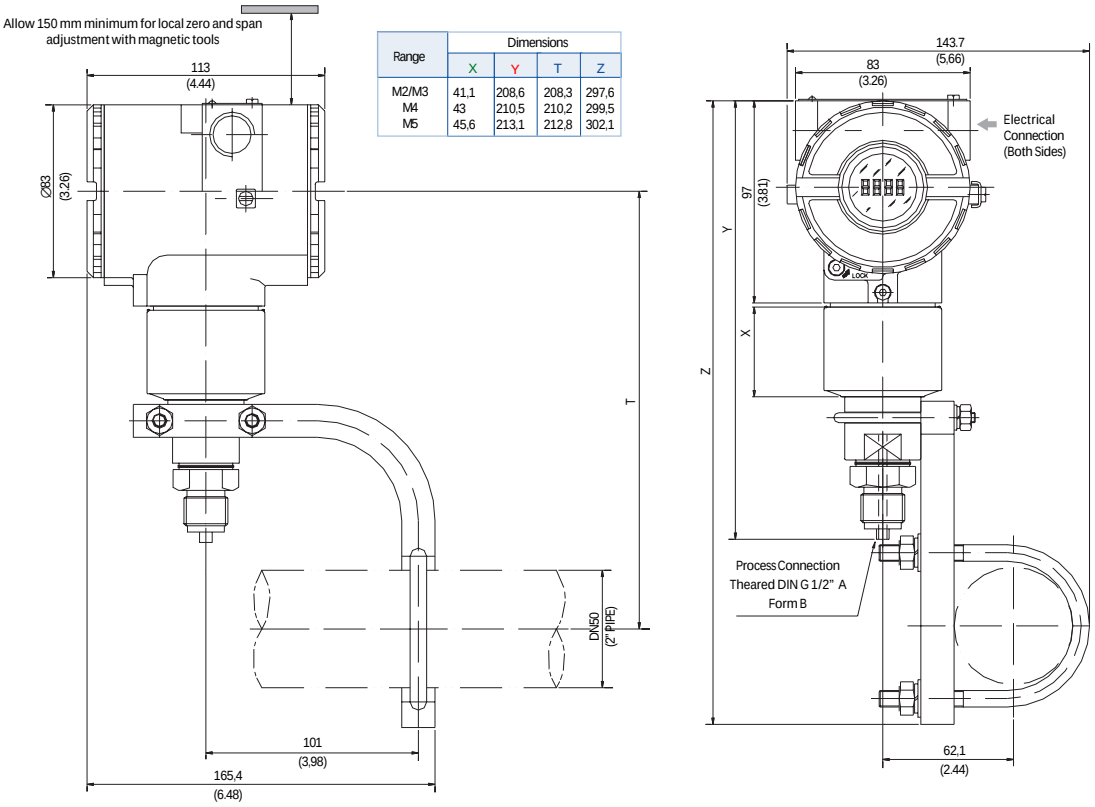

Range	Dimensions			
	X	Y	T	Z
M2/M3	41,1	208,6	208,3	297,6
M4	43	210,5	210,2	299,5
M5	45,6	213,1	212,8	302,1

Male

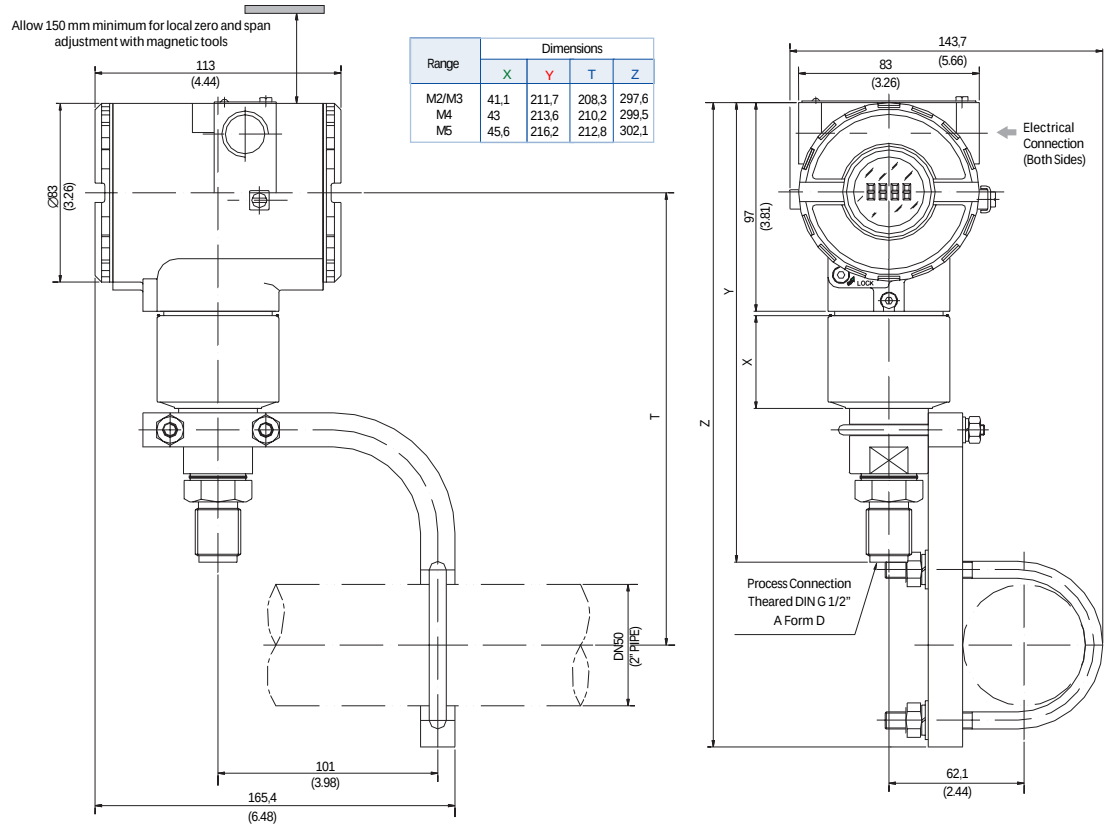

Range	Dimensions			
	X	Y	T	Z
M2/M3	41,1	211,7	208,3	297,6
M4	43	213,6	210,2	299,5
M5	45,6	216,2	212,8	302,1

USA
Smar International Corporation
6001 Stonington Suite 100
Houston, TX 77040
Phone +1 713 849-2021
Fax: +1 713 849-2022
e-mail: sales@smar.com

Smar Research Corporation
4250 Veterans Memorial
Highway - Unit 156 - Holbrook 11741
New York - USA
Phone: 1 631 737 3111
Fax: 1 631 737 3892

Smar Laboratories Corporation
10960 - Millridge North,
Suite 107 - TX 77070
Houston - USA
Phone: 1 281 807 1501
Fax: 1 281 807 1506

GERMANY
Smar GmbH
Rheingaustrasse 9
55545 Bad Kreuznach
Tel: + 49 671-794680
Fax: + 49 671-7946829
e-mail: infoservice@smar.de
web: www.smar.de

FRANCE
Smar France (Main office)
42, rue du Pavé des Gardes
F-92370 Chaville
Tel.: +33 1 41 15-0220
Fax: +33 1 41 15-0219
Mobile: +33 6 11 75 06 34
e-mail: smar.am@wanadoo.fr

MEXICO
Smar Mexico (MEXICO CITY)
Cerro de las Campanas No. 3, Despacho #119
San Andres Atenco Z.P. 54040
Tlanepantla, Edo. de México, México City
Tel: +52 555 378 4600 / 378 4601 / 378 4602
Fax: +52 555 378-4603
e-mail: ventas@smar.com

BRAZIL
Smar Equipamentos Ind. Ltda.
Rua Dr. Antonio Furlan Jr., 1028
Sertãozinho - SP 14170-480
Tel.: +55 16 3946-3510
Fax: +55 16 3946-3554
e-mail: smarinfo@smar.com
web: www.smar.com.br

CHINA
Smar China Corp.
3 Baishiqiao Road, Suite 30233
Beijing Friendship Hotel - 100873, PRC
Tel.: +86 10 6849-8643
Fax: +86 10 6894-0898
e-mail: info@smar.com.cn
web: www.smar.com.cn

SINGAPORE
Smar Singapore
315, Outram Road #06-07
Tan Boon Liat Building - 169074
Tel: 65 6324 0182
Fax: 65 6324 0183
e-mail: info@smar.com.sg

ARGENTINA
Smar Periféricos
Muñecas 1246 (C1414AEL)
Capital Federal - Argentina
Tel/Fax: (5411) 4857-3050
e-mail: info@smarperifericos.com
web: www.smarperifericos.com

Plus a network of
representatives in 58 countries.
For your nearest representative
please contact:
smarinfo@smar.com

smar
First in Fieldbus
www.smar.com