Installation Instructions

Layer Picker Single Rail Follower Assembly

This sheet provides instructions to install a Rail Follower Assembly. The Rail Follower keeps the truck and layer picker running parallel along the guide rail in a pick line.

1 Align the truck center line to travel parallel along the rail with the truck tires spaced .50 in. (12 mm) inside the rail.

2 Position the Rail Follower on the rail and mark weld locations on the bottom of the truck chassis.

3 Weld the Rail Follower brackets to the bottom of the truck chassis as recommended by the truck QEM.

4 Every 500 hours of truck operation, inspect the clearance between the bottom of the roller plate and top of rail. As the truck tires wear, adjust the shims to maintain .50 in. (12 mm) clearance.

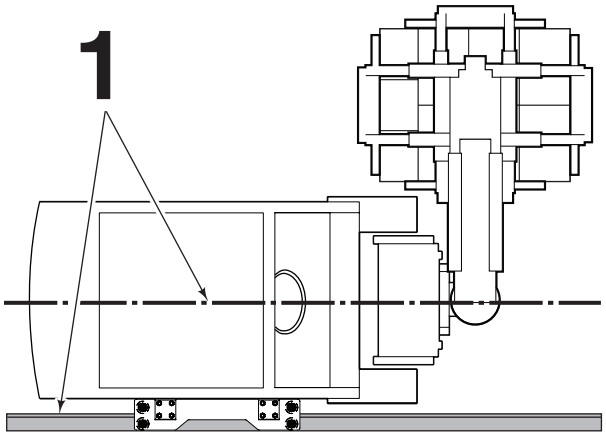

LP0355.eps

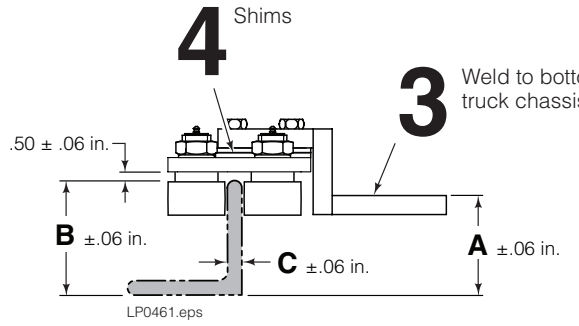

LP0461.eps

Truck	Assembly Part No.	Dimensions (in.)			
		A	B	C	D
CAT E6000	6153790	5.25	6.0	.75	30.0
Crown FC4000-60	6153217	4.80	6.0	.75	30.0
Hyster ERC 80	6161971	5.09	5.0	.50	25.0
Toyota	1111808	5.25	6.0	.75	30.0

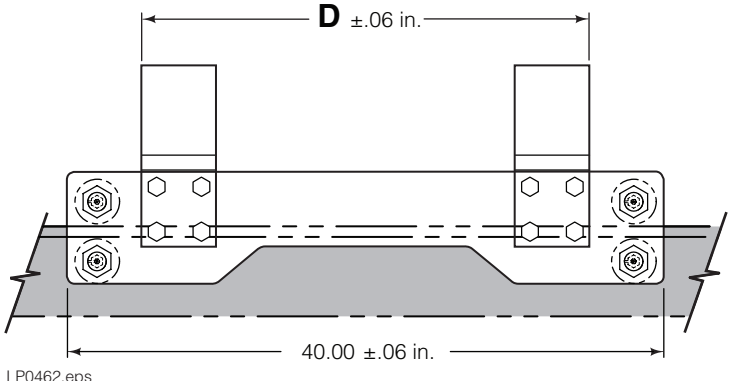

LP0462.eps

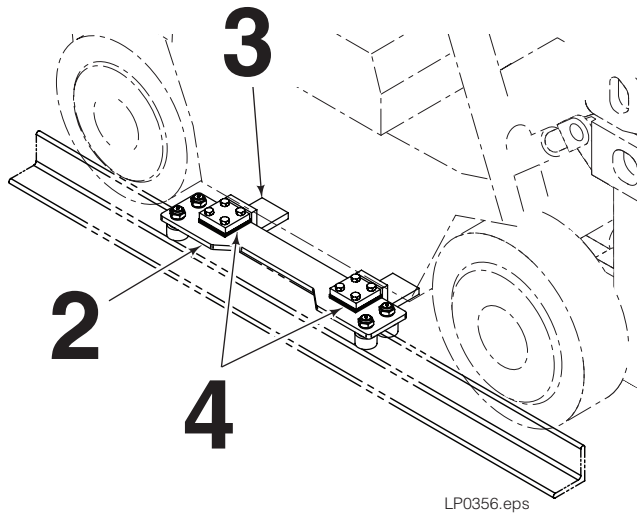

LP0356.eps

cascade® corporation

For Technical Support . . .
Call: 1-800-227-2233 Fax: 1-888-329-8207
Internet: www.cascorp.com
Write: Cascade Corporation, PO Box 20187, Portland, OR 97294

To Order Parts . . .
Call: 1-888-227-2233 Fax: 1-888-329-0234
Internet: www.cascorp.com
Write: Cascade Corporation, 2501 Sheridan Ave., Springfield, OH 45505

Rail Follower Assemblies

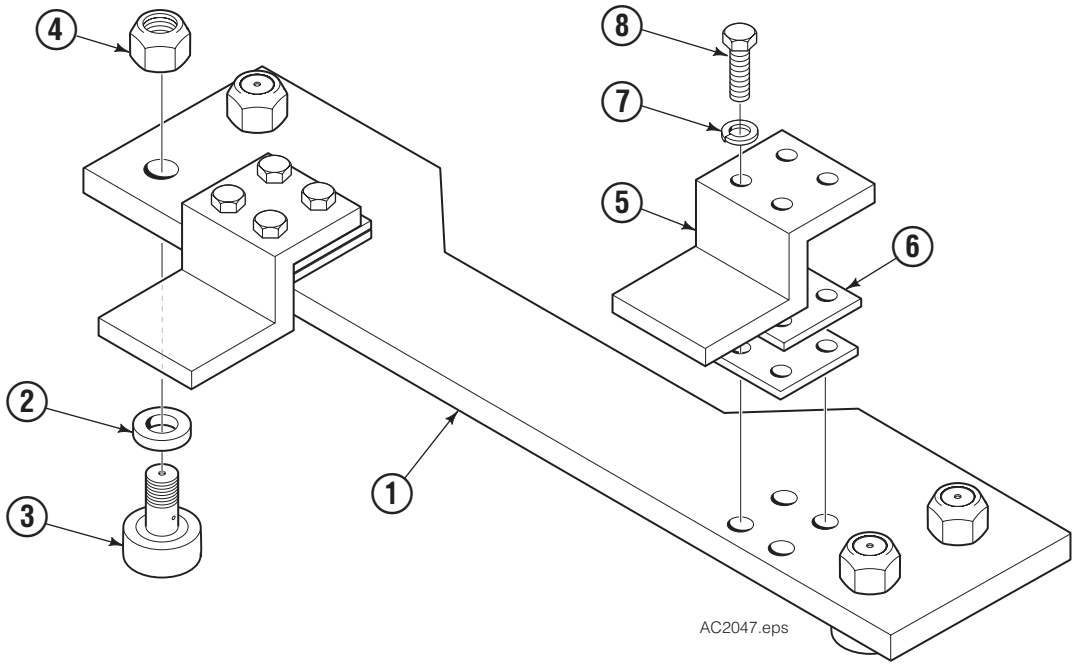

REF	QTY	CAT E6000 PART NO.	Crown FC4000-60 PART NO.	Hyster ERC 80 PART NO.	Toyota PART NO.	DESCRIPTION
		6153790	6153217	6161971	1111808	Rail Follower Assembly
1	1	6153185 ◆	6153185 ◆	6161981 ■	●	Plate
2	4	6153198 ◆	6153198 ◆	6153198 ■	●	Spacer
3	4	6153193 ◆	6153193 ◆	6153193 ■	●	Track Roller
4	4	561049 ◆	561049 ◆	6155462 ■	●	Nut
5	2	6153791	6153190	6161978	1140235	Truck Mount
6	4	6153188	6153188	6153188	1140241	Spacer Plate
7	8	681346	681346	681346	—	Lockwasher
8	8	751510	751510	751510	643574	Capscrew

◆ Included in Roller Assembly 6153204.
● Included in Roller Assembly 1140230.
■ Included in Roller Assembly 6161980.

© Cascade Corporation 2011