DM-135
DRUM MOWER

USER'S MANUAL

DM135 DRUM MOWER INSTRUCTIONS

CHAPTER 1 SAFE OPERATION

Do not attempt to operate the mower until you have read the operator's manual and all the safety signs on the mower.

NOTE: The words **Danger**, **Warning** or **Caution** on the safety signs indicate a hazard or unsafe practice, which could result in injury or death if proper precautions are not taken.

Do not attempt any unauthorized modifications to the mower as this could affect the function or the safety of the mower.

DO NOT OPERATE WITHOUT ALL SAFETY STICKERS IN PLACE ON THE DRUM MOWER!

Following is the safety stickers:









◆ **CAREFULLY READ OPERATORS MANUAL BEFORE HANDLING MOWER**

A. Keep a sufficient protection distance from the drum knife when the engine is in operation.

B. Do not touch any moving part. Wait until all parts of the mower are at rest when you want to check and maintenance the mower.

C. Keep a safe distance when the engine is in operation.

◆ **SAFETY INSTRUCTIONS**



This symbol is used throughout this manual to call attention to the safety instructions. These instructions are of great importance and must be read carefully and obeyed.



CAUTION: BEFORE ATTEMPTING TO OPERATE THIS MACHINE, CAREFULLY READ ALL INSTRUCTIONS CONTAINED WITHIN THIS MANUAL. ALSO READ THE INSTRUCTION MANUAL PROVIDED WITH YOUR TRACTOR.

◆ **BEFORE OPERATING**

1. Read all instructional and safety decals provided with your machine.
2. Allow only responsible, properly instructed individuals to operate your machine. Carefully supervise inexperienced operators.
3. Use a tractor that meets the tractor requirements contained within this manual. Additional tractor weights may be necessary.
4. Make sure the machine is in good operating condition and that all protective shields and curtains are in place and in proper working order.
5. Be sure all bystanders and other workers are clear before starting machine.
6. Make no modifications to the machine.

◆ **DURING OPERATION**

1. Always disengage power take-off, shut off tractor engine, place transmission in park or set park brake, and wait for blade rotation to stop

before working on or near mower for any reason including cleaning, inspecting or servicing machine.

2. The tractor Power take-off must be equipped with an over-riding clutch or one must be added to the mower PTO shaft.
3. Keep hands and feet away from rotating blades and other moving parts.
4. Never allow riders on the mower.
5. Insist that all bystanders and other stay clear of work area when mower is operating.
6. Exercise extreme care when operating on rough and/or steep terrain. Avoid operation on terrain that is excessively rough or steep.
7. Use a tractor equipped with 540-rpm power take-off.

◆ **DURING SERVICE AND MAINTENANCE**

1. Before removing pins from flotation assembly, consult instructions in this manual. Flotation assembly will spring back quickly if proper safety precautions are not taken.
2. Use only replacement parts that are recommended by Manufacturing Company.
3. If it is necessary to operate the tractor indoors for more than a few seconds, be sure to provide enough ventilation to remove the toxic exhaust fumes.

◆ **DURING TRANSPORT**

1. Secure the mower in transport position to reduce transport width.
2. Use good judgment and drive slowly over rough or uneven roads.
3. Be courteous and obey all applicable laws governing road use.
4. Drive carefully and, if possible, avoid starts, stops or turns. Turn corners slowly.

WARNING: FAILURE TO COMPLY WITH THE ABOVE SAFETY INSTRUCTIONS OR THOSE THAT FOLLOW WITHIN THIS MANUAL COULD RESULT IN SEVERE PERSONAL INJURY OR DEATH.

THIS MOWER IS NOT TO BE USED FOR ANY PURPOSE OTHER THAN THAT FOR WHICH IT IS INTENDED AS EXPLAINED IN THE OPERATOR'S MANUAL.

◆ **SAFETY DECALS**

The safety decals located on your machine contain important and useful information that will help you operate your equipment safely.

To assure that all decals remain in place and in good condition, follow the instructions given below.

1. Keep decals clean. Use soap and water—not mineral spirits, adhesive cleaners and other similar cleaners that will damage decal.
2. Replace all damaged or missing decals. When attaching decals, surface temperature of the machine must be at least 40 degrees Fahrenheit, The surface must also be clean and dry.
3. When replacing a machine component, to which a decal is attached be sure to also replace the decal.

4. Replacement decals can be purchased from your dealer

CHAPTER 2 SPECIFICATIONS

◆ TRACTOR SPECIFICATIONS



CAUTION: Do not operate mower with a tractor that does not comply with the following requirements:

Ⅰ.Horsepower-27(minimum) Ⅱ.Counter balance weight :It may be necessary to add weight to the front end and/or left rear wheel of your tractor to maintain adequate tractor stability and weight of your tractor and the conditions in which you are operating your tractor. Front tractor wheels must remain firmly on the ground at all times. Contact between front, wheels and ground must be firm enough to provide good steering control.



CAUTION: Regardless of tractor weight and size, it in always necessary to exercise reasonable care during tractor operation to avoid tractor rollover and/or loss of steering control.

◆ MOWER SPECIFICATIONS

Model	**DM 135**
Length	**2630**
Width	**935**
Cutting width	**1350**
Weight	**310 Kg**
PTO speed	**540 rpm**

CHAPTER 3 OPERATING INSTRUCTIONS

◆ PREPARING YOUR MOWER FOR FIELD OPERATION

1. Check to be sure there are three blades on each drum. These blades should be new or showing approximate equal wear.
2. A damaged or worn-out blade should be replaced immediately.
3. Damaged or worn out blade holders should be replaced immediately.
4. Be certain that PTO speed does not exceed 450rpm.

NOTE: It is very important that the machine be balanced. The high speed of the drums (1720rpm) makes it imperative that the drums are equally heavy on all sides so they are in balance. Both the drums and saucers have been dynamically balanced at the factory and this balance should

not be disturbed when the mower is operating. Imbalance may cause excessive vibration, which in turn may cause damage to the machine. If you notice abnormal vibration in the machine or a change in the noise that the machine produces, stop immediately and inspect the machine.
CAUTION: Disengage PTO, stop tractor engine, set park brake and wait for blade rotation to stop before working on blades, drums or saucers.

5. Be sure all bolts and nuts are tight, especially the bolts securing the gearbox lid.
6. Use original joints. For example, after a repair job, a new rubber joint should be fitted between the gearbox and lid. This joint should be glued in the lid its exactly the same location as the old one.

NOTE: The gearbox is subject to heavy strain when the mower is operating; consequently, the lid is rigid and fitted with several bolts, these bolts must be kept tight at all times. The joint that is glued to the interior of the lid should be replaced carefully so that a metal contact is made between the lid and the box.

- **SAFETY BREAKAWAY**

This machine is equipped with an automatic safety breakaway device. If the drums meet an obstruction, the mower automatically swings back. Disengage power take—off, when mower stops check the PTO for profile tube alignment. To re—engage mower into mowing position, you simply back up the tractor, while the mower is contacting the ground, until the mower swings back into mowing position and the breakaway has reset. Do not operate the mower in the tripped position.

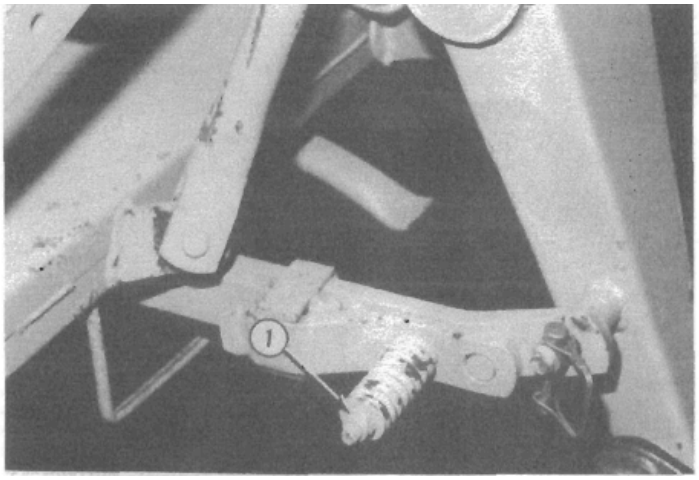

Figure A

If for any reason, the breakaway device releases without the mower encountering an obstruction, the adjusting nut #1, Figure A on the breakaway should be tightened.

7. In case of wear to the bottom skirts of the drums above the blades, it is possible to rotate the drum 40 degrees in relation to the blade holders by

removing the saucers and the blade holder. Figure B (40 degrees).

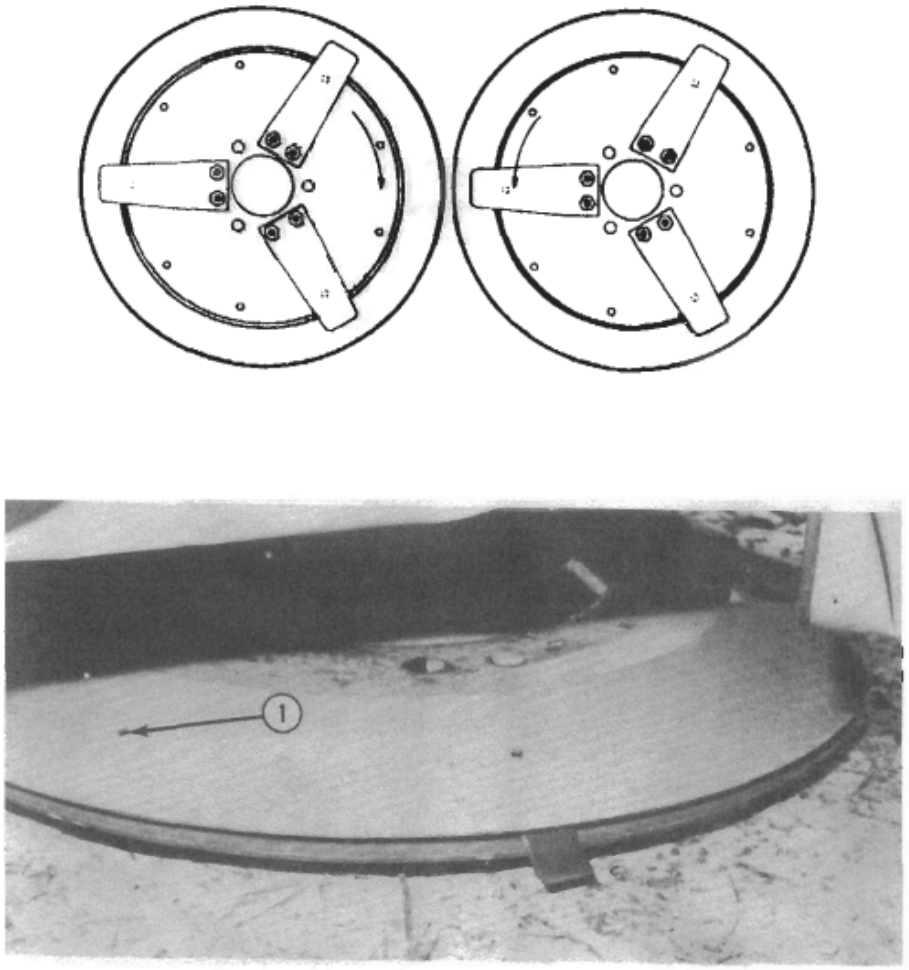

Figure B

8. Tighten Allen screws of saucers securely and recheck after a few working hours.
9. The PTO drive shaft may have to be shortened to fit your particular tractor. The shaft should be shortened a minimum amount only. A freewheeling clutch must be fitted PTO shaft if the tractor does not have an internal freewheeling clutch. Always use stabilizers or sway bars when attaching the machine to the tractor to prevent side movement of the machine. To put the mower into mowing position after transport, the transport tube is placed in the upper position and the safety break away is fitted to the upper pin of the hitch frame. Depending on the length of the top link, either the front or the near holes in the hitch frames can be used. If the machine leans too far forward when lifting in working position, use lower top link pinhole.

10. Be sure protective curtains and shields are in place and in good condition. Adjust the lower arms of the tractor 3-point in such a way that the mower will be raised horizontally in mowing position.

◆ **CUTTING HEIGHT ADJUSTMENT**

The cutting height may be adjusted slightly be means of the top link. Best results are obtained by tilting the mower slightly backward in rocky conditions. In order to prevent the re-cutting of the stubble, the mower should never be tilted backwards beyond 5 degrees. In rocky conditions tilting backwards extends blade life but not mowing quality.

◆ **INSTRUCTIONS FOR MOWING**

1. Start the tractor and build up to correct drum speed (1720 rpm --PTO 540rpm) before entering the crop.
2. Select the gear that allows your tractor to run easily. This will depend on the crop the ground conditions.
3. Always use sharp blades since these will be more economical than blunt ones.
4. The sub-frame has to be positioned horizontally; this enables the machine to follow and ground contour correctly.

◆ **TENSION OF DRIVE BELTS**

During the first few working hours, the drive belts may shows some stretch. A spring attached to the belt tension device will maintain the correct tension of the belts. Instructions for tightening the drive belts;

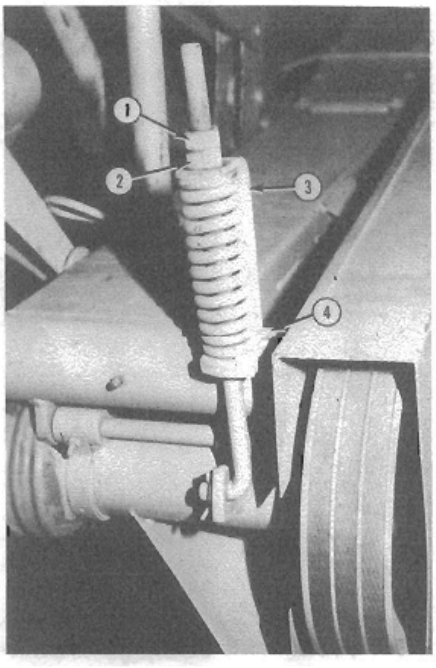

FIGURE C

1. Loosen lock nut 1, Figure C, of the tension belt .
2. Tighten the nut #2 , until the spring tension indicator #3 ,just

touches the stop #4.

3. Relock the nut #1. Tensioning of the V belts is only necessary if belts are slipping. Maximum tension in when the indicator is about 1/8” clearance from the bottom.

If a V belt breaks or comes off, the whole set of belts should be replaced.

NOTE: If the V belts are over tensioned, damage will occur to the gearbox input shaft bearings and main drive shaft bearings. If the V belts slip, check the V belt tension. If this is correct and the belts still slip, you should reduce the forward speed of the tractor.

CAUTION: Never tighten the nut so far that the compression spring becomes in operative.

CHAPTER4 MAINTENANCE AND LUBRICATION INSTRUCTIONS

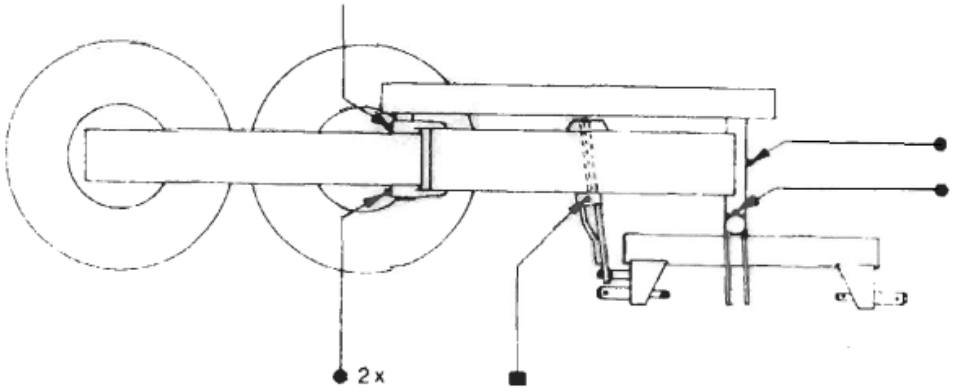

● =Grease

■=Oil every 5 hours of work

Figure G

The gearbox is filled with EP—0 mulligan grease. Refilling is only necessary after repair; Grease level should come to the lower side of the horizontal shaft.

PTO MAINTENANCE & LUBRICATION INSTRUCTIONS

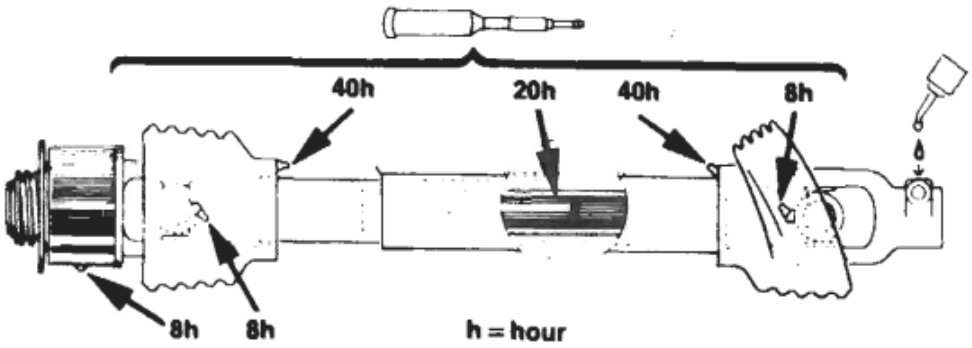

CHAPTER5 PARTS LIST

The DM135 mower is a two—drum mower. Each drum has three knives, which can be changed quickly with a simple tool. The hay cut by the knives is carried between the drums and put in a loosely laid swath. Three V—belts transmit power to the input gear shaft, then to the main drive shaft, which in turn drives the drums through the bevel gears.

A breakaway device is incorporated on this machine, which automatically operates when the mower hits an obstruction. This protects the drums from damage.

A complete part list section is also contained in the manual for easy reference to parts. The use of this section will provide a fast, accurate way to order parts. We recommend that this manual be readily available for reference at all times.

Manufacturing Company reserves the right to make changes in engineering, design, and specifications; add improvements, or discontinue manufacture at any time without notice or obligation.

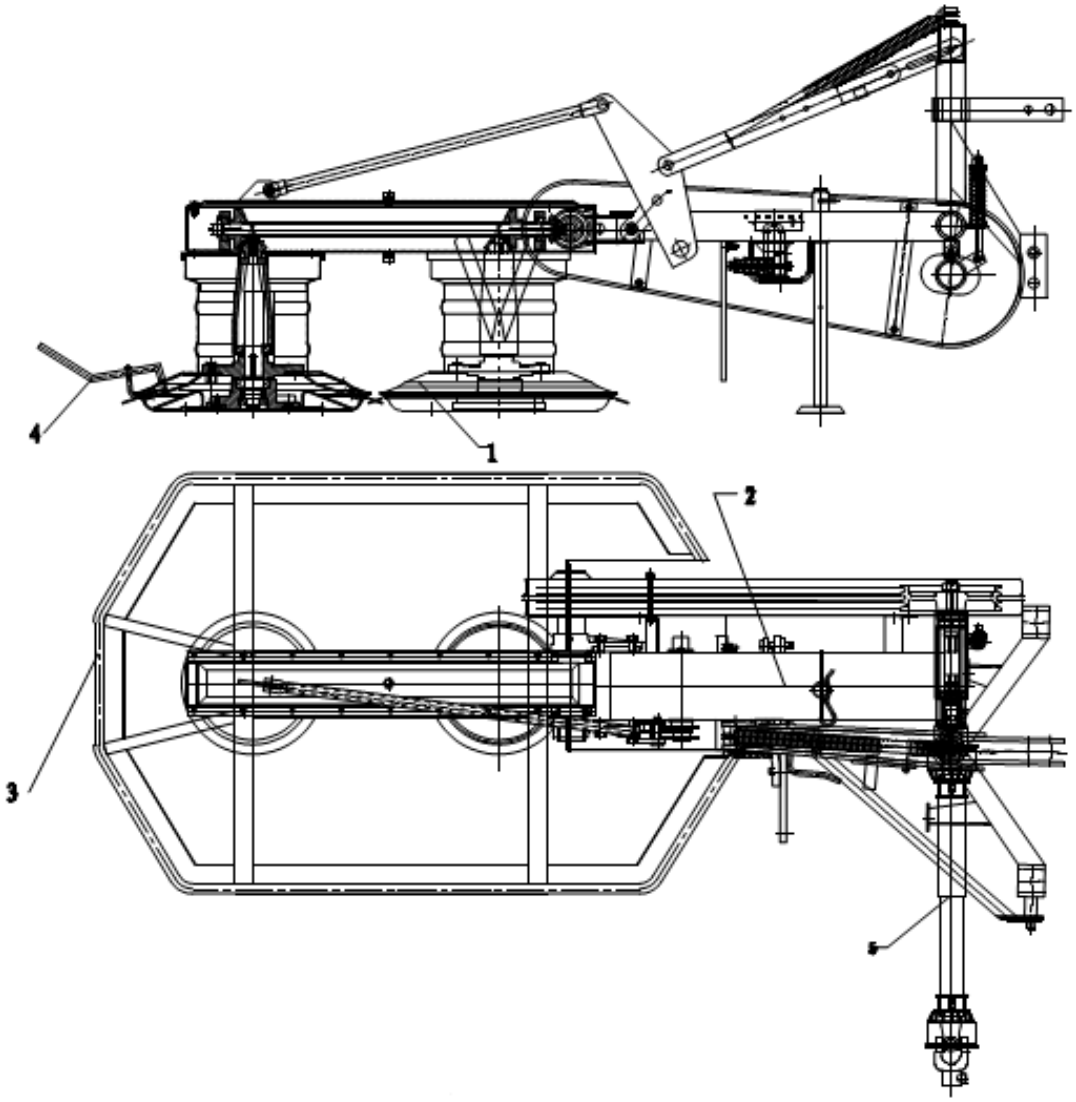

ITEM NO.	Part NO。	零件名称	DESCRIPTIONS	QTY	REMARK
1	DM135.10.001	割草机割草器	MOWERING ASSEMBLY	1	
2	DM135.20.001	皮带传动部分	TRANSMISSION ASSEMBLY	1	
3	DM135.30.001	割草机罩壳	COVER	1	
4	DM135.40.001	割草机卸刀架	HANDLE, BLADE REPLACEMENT	1	
5	DM135.50.001	动力输出轴	PTO SHAFT	1	

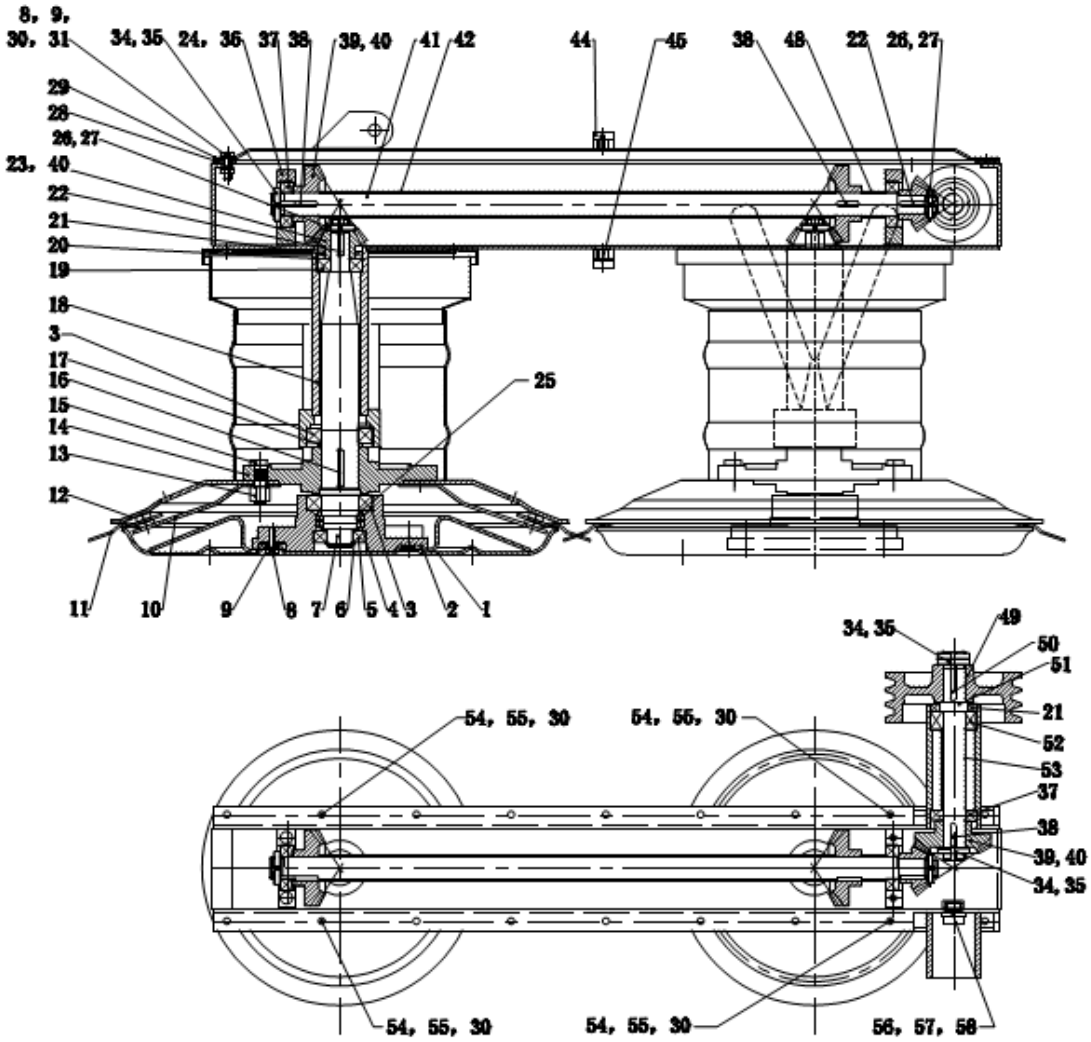

ITEM NO.	Part NO。	零件名称	DESCRIPTIONS	QTY	REMARK
1	DM135.10.010	滑板焊合件	Saucer	2	
2	DM135.10.101	滑板连接座	Saucer holder	2	
3	GB/T276-1994	轴承6210 2RZ	Bearing 6210 2RZ	4	
4	GB/T301-1995	轴承51109	Bearing 51109	2	
5	GB/T276-1994	轴承6207 2RZ	Bearing 6207 2RZ	2	
6	GB/T8941.1-1986	轴用挡圈 35	Retaining ring 35,shaft	2	
7	DM135.10.102	主轴	Drum shaft	2	
8	GB5783-2000	螺栓M10X30	Bolt M10X30	18	
9	GB/T93-1987	弹垫 10	Lock washer 10	18	
10	DM135.10.011	刀座组合件	Blade holder	6	
11	DM135.10.103	刀片	Blade	6	
12	DM135.10.012	鼓形焊合件	Drum, weldment	2	

13	GB/T889.2-2000	防松螺母 M16X1.5	Lock Nut M16x1.5	12	
14	DM135.10.104	驱动盘	Hub, driving	2	
15	DM135.10.105	驱动盘防松螺栓 M16X1.5	Bolt M16X1.5	12	
16	GB1096-2003	平键 8X7X55	Key 8X7X55	2	
17	DM135.10.106	调整垫圈1	Gasket	2	
18	DM135.10.013	箱体焊合件	Main frame	1	
19	GB/T276-1994	轴承6305 2RZ	Bearing 6210 2RZ	2	
20	GB893.1-1986	挡圈62	Circlip 62	2	
21	GB9877.1-1988	密封圈FB40X62X8	Ring FB40X62X8	2	
22	GB1096-2003	平键 8X7X35	Key 8X7X35	3	
23	DM135.10.107	齿轮1	Pinion	3	
24	GB/T70.1-2000	内六角圆柱头螺钉 M10X80	Screw M1ox80	4	
25	DM135.10.108	小隔套	Short spacer	2	
26	GB/T810-1988	小圆螺母M24X1.5X8	Round nut M24X1.5X8	3	
27	GB/T858-1988	圆螺母止动垫圈 24	washer 24	3	
28	DM135.10.109	密封垫	Gasket	1	
29	DM135.10.014	箱体盖焊合件	Cover, main frame	1	
30	GB/T97.1-2002	平垫10	Washer 10	22	
31	GB6170-2000	螺母M10	Nut M10	18	
34	GB/T858-1988	圆螺母止动垫圈30	washer 30	3	
35	GB/T810-1988	小圆螺母M30X1.5X8	Round nut M30X1.5X8	4	
36	DM135.10.111	上轴承座	Bearing seat	2	
37	GB/T276-1994	轴承6206 2RZ	Bearing 6206 2RZ	3	
38	GB1096-2003	平键 8X7X32	Key 8X7X32	3	
39	DM135.10.112	齿轮2	Bevel gear	3	
40	DM135.10.113	齿轮调整垫圈	Gasket, adjustment	1	
41	DM135.10.114	齿轮传动轴	Drive shaft	1	
42	DM135.10.115	长定位隔套	Long spacer	1	
44.	DM135.10.117	带孔螺栓M16X15	Vent bolt M16x15	1	
45	DM135.10.118	螺栓M16X15	Plug M16x15	1	
48	DM135.10.119	短齿轮隔套	spacer	1	
49	DM135.10.120	小带轮	Pulley	1	
50	GB1096-2003	平键 8X7X45	Key 8X7X45	1	
51	DM135.10.121	小带轮轴	Shaft	1	
52	GB/T296-1994	双列角接触球轴承 3206RZ	Bearing 3206RZ	1	30X62X2 3.8

53	DM135.10.123	小带轮轴定位隔套	Spacer	1	
54	GB5782-2000	螺栓M10X60	Bolt M10X60	4	
55	GB/T889.1-2000	防松螺母M10	Nut M10	4	
56	JB/ZQ4450-1986	外六角螺塞M20X1.5	Plug M20X1.5	1	
57	GB6173-2000	六角薄螺母M20X1.5	Nut M20X1.5	1	
58	JB/ZQ4454-1986	铜垫20	Copper gasket 20	1	

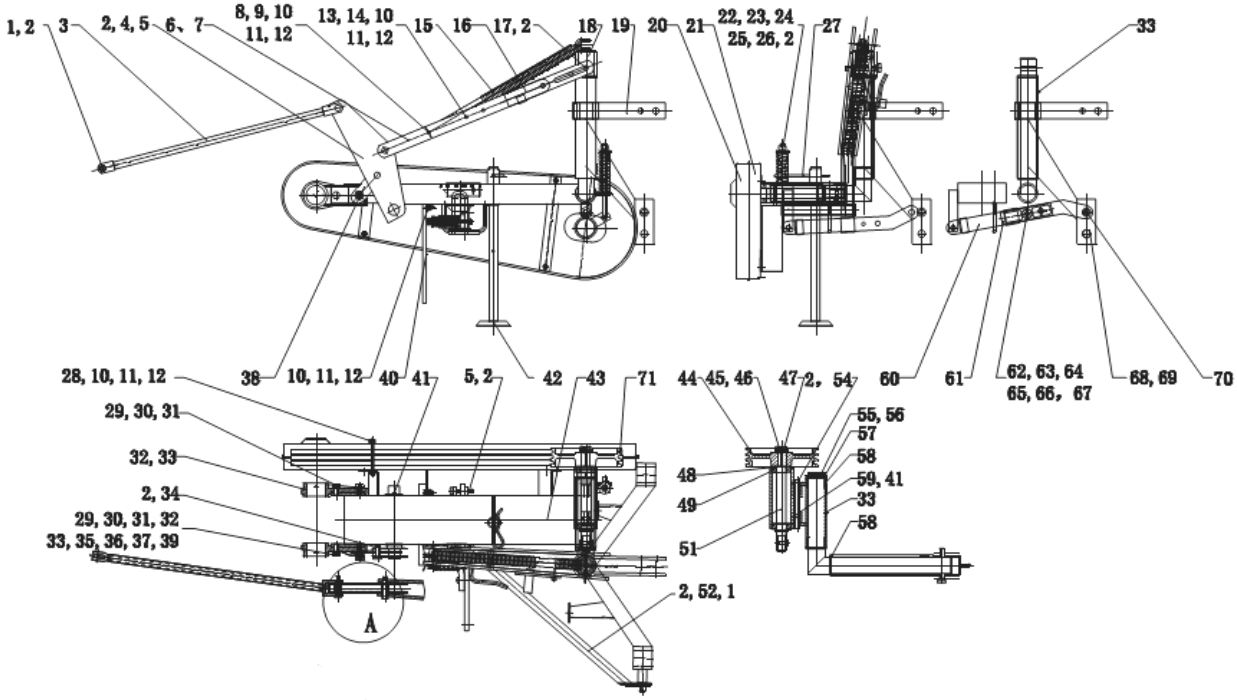

ITEM NO.	PART NO.	零件名称	DESCRIPTIONS	QTY	REMARK
1	DM135.20.101	销轴16	Pin 16	2	
2	GB/T91-2000	开口销4X25	cotter 4X25	9	
3	DM135.20.010	拉杆焊合件	Extension bar	1	
4	DM135.20.011	连接座焊合件	Lift bracket	1	
5	DM135.20.102	销轴16X75	Pin 16X75	2	
6	DM135.20.012	固定架焊合件	Lift plate	1	
7	DM135.20.147	固定架	Link plate	1	
8	DM135.20.103	短套管	Spacer	1	
9	GB5782-2000	螺栓M10X90	Bolt M10X90	1	
10	GB/T93-2000	弹垫10	washer 10	7	
11	GB/T97.1-2002	平垫10	Washer 10	7	

12	GB/T6170-2000	螺母M10	Nut M10	7	
13	DM135.20.104	长套管	Spacer	1	
14	GB5782-2000	螺栓M10X100	Bolt M10X100	1	
15	DM135.20.105	热卷拉伸弹簧	Extension spring	1	
16	DM135.20.013	联板焊合件	Linkage	1	
17	DM135.20.106	销轴16X112	Pin 16X112	1	
18	DM135.20.014	连接套焊接件	Cap	1	
19	DM135.20.015	悬挂架焊合件	Hitch frame	1	
20	DM135.20.107	带轮外罩	Cover, outside	1	
21	DM135.20.108	带轮内罩	Cover, inside	1	
22	DM135.20.109	连接螺栓M16	Connecting bolt M16	1	
23	DM135.20.110	导向套	Guide bush	1	
24	GB/T889.1-2000	锁紧螺母M16	Lock nut M16	1	
25	DM135.20.111	压缩弹簧1	Compression spring	1	
26	GB/T97.1-2002	平垫16X40X3	Washer 16X40X3	1	
27	DM135.20.112	快速挡销	Spring clip	1	
28	DM135.20.113	方形螺栓M10	Rod M10	4	
29	GB5783-2000	螺栓M16X30	Bolt M16X30	3	
30	GB/T93-1987	弹垫16	Washer 16	4	
31	DM135.20.114	防松垫板1	Lock plate	1	
32	DM135.20.115	轴连接块	Connecting block	1	
33	JB/T7940.1-1995	直通式压注油杯M6	Zerk M6	4	
34	DM135.20.116	销轴19X42	Pin 19X42	1	
35	GB5783-2000	螺栓M16X45	Bolt M16X45	1	
36	DM135.20.117	防松垫板2	Lock plate	1	
37	DM135.20.118	连接套	Link bush	1	
38	DM135.20.119	连接板	Link plate	1	
39	DM135.20.123	轴连接块1	Connecting block	1	
40	DM135.20.022	防护板焊合件	Protective plate	1	
41	GB/T91-2000	开口销4X50	Cotter 4X50	1	
42	DM135.20.016	撑脚焊合件	Stand leg	1	
43	DM135.20.017	机架焊合件	Sub-frame	1	
44	DM135.20.122	大带轮	Pulley	1	
45	GB/T810-1988	小圆螺母M30X1.5X8	Round nut M30X1.5X8	2	
46	GB/T858-1988	圆螺母止动垫圈30	Round washer 30	1	
47	GB1096-2003	平键8X7X50	Key 8X7X50	1	
48	DM135.20.124	调整垫圈	Adjustment washer	2	

49	GB/T276-93	轴承6207	Bearing 6207	2	
51	DM135.20.127	花键轴	Spline shaft	1	
52	DM135.20.018	固定杆焊合件	Transport bar	1	
54	DM135.20.129	长销子15.8	Pin	1	
55	DM135.20.128	快速挡销1	Pin	1	
56	DM135.20.019	连接轴焊合件	Pivot	1	
57	DM135.20.121	调整垫圈	Adjustment washer	1	
58	DM135.20.125	尼龙衬套	Nylon bush	4	
59	DM135.20.020	输入轴套焊合件	Housing	1	
60	DM135.20.021	滑块拉杆焊合件	Slide plate, breakaway	1	
61	DM135.20.130	卡爪	Clamp	1	
62	DM135.20.131	压缩弹簧2	Compression spring 2	1	
63	DM135.20.132	螺栓M12X150	Bolt M12X150	1	
64	GB/T6170-2000	螺母M12	Nut M12	1	
65	GB/T93-1987	弹垫12	Lock washer 12	1	
66	DM135.20.133	导向套1	Bush	1	
67	GB/T96.2-2002	大垫圈12	Large washers 12	1	
68	DM135.20.134	销轴25	Pin 25	2	
69	DM135.20.135	锁销12	Locking pin 12	2	
70	DM135.20.136	锁销8	Locking pin 8	1	
71	GB/T11544-1997	V形带B17X2650	V—belt B17X2650	3	

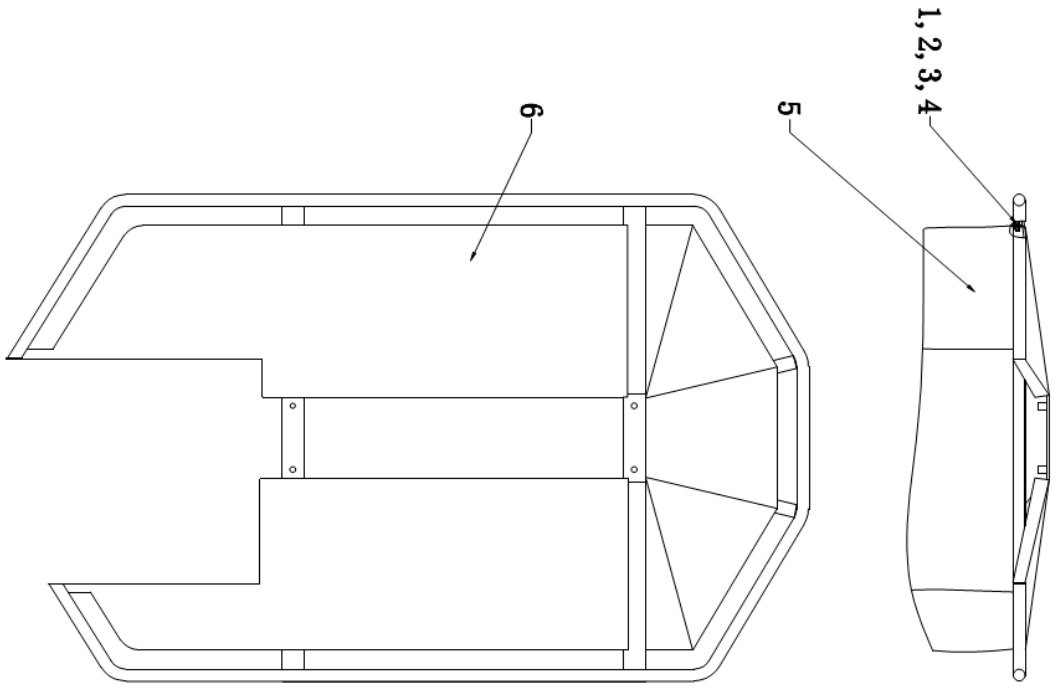

ITEM NO.	Part NO。	零件名称	DESCRIPTIONS	QTY	REMARK
1	GB5783-2000	螺栓M6X16	Bolt M6X16	25	
2	GB/T97.1-2002	平垫6	Plain washer 6	25	
3	GB/T93-2000	弹垫6	Lock washer 6	25	
4	GB/T6170-2000	螺母M6	Nut M6	25	
5	DM135.30.101	篷布	Tarpaulin	1	
6	DM135.30.010	罩壳焊合件	Frame, weldment	1	