

VISHAY IRF840L Power MOSFET Owner's Manual

Contents

1 VISHAY IRF840L Power MOSFET
2 Product Information
3 Description
4 Frequently Asked Questions
5 OVERVIEW
6 PRODUCT SUMMARY
7 FEATURES
8 DESCRIPTION
9 THERMAL RESISTANCE RATINGS
10 SPECIFICATION
11 TYPICAL CHARACTERISTICS
12 Package Information
13 RECOMMENDED MINIMUM PADS FOR D2PAK: 3-Lead
14 Legal Disclaimer Notice
15 Documents / Resources
15.1 References

VISHAY IRF840L Power MOSFET

VISHAY-IRF840L-Power-MOSFET-product

Product Information

Specifications

- Product Name: IRF840L, SiHF840L Vishay Siliconix Power MOSFET
- Package Type: I2PAK (TO-262)
- N-Channel MOSFET
- Maximum Drain-Source Voltage (VDS): 500V
- On-Resistance (RDS(on)): 9.3 Ohms
- Maximum Gate Charge (Qg max.): 32nC
- Configuration: Single

Description

Third generation power MOSFETs from Vishay provide the designer with the best combination of fast switching, ruggedized device design, low on-resistance, and cost-effectiveness. The I2PAK (TO-262) package is capable of accommodating die sizes up to HEX-4, providing high power capability and low on-resistance. It is suitable for high current applications due to its low internal connection resistance and can dissipate up to 2.0W.

Thermal Resistance Ratings

- Maximum Junction-to-Ambient: 62°C/W (Typical), 1.0°C/W (Maximum)
- Maximum Junction-to-Case (Drain): 1.0°C/W

Parameter Summary

- Drain-Source Breakdown Voltage (VDS)
- Gate-Source Voltage (VGS)
- Continuous Drain Current (ID)
- Pulsed Drain Current (IDM)
- Maximum Power Dissipation (PD)
- Soldering Recommendations: -55 to +150°C for 10s

Thermal Resistance Ratings

- Maximum Junction-to-Ambient: 62°C/W (Typical), 1.0°C/W (Maximum)
- Maximum Junction-to-Case (Drain): 1.0°C/W

Frequently Asked Questions

Q: Is the IRF840L MOSFET RoHS compliant?

A: This datasheet provides information about parts that are RoHS-compliant and/or non-RoHS-compliant. Please refer to the specific information/tables in the datasheet for details.

Q: What is the maximum power dissipation of the IRF840L MOSFET?

A: The IRF840L MOSFET can dissipate up to 2.0W.

Q: What is the maximum drain-source voltage of the IRF840L MOSFET?

A: The maximum drain-source voltage (VDS) of the IRF840L MOSFET is 500V.

Q: Can the IRF840L MOSFET be used in high-current applications?

A: Yes, the IRF840L MOSFET is suitable for high-current applications due to its low internal connection resistance.

OVERVIEW

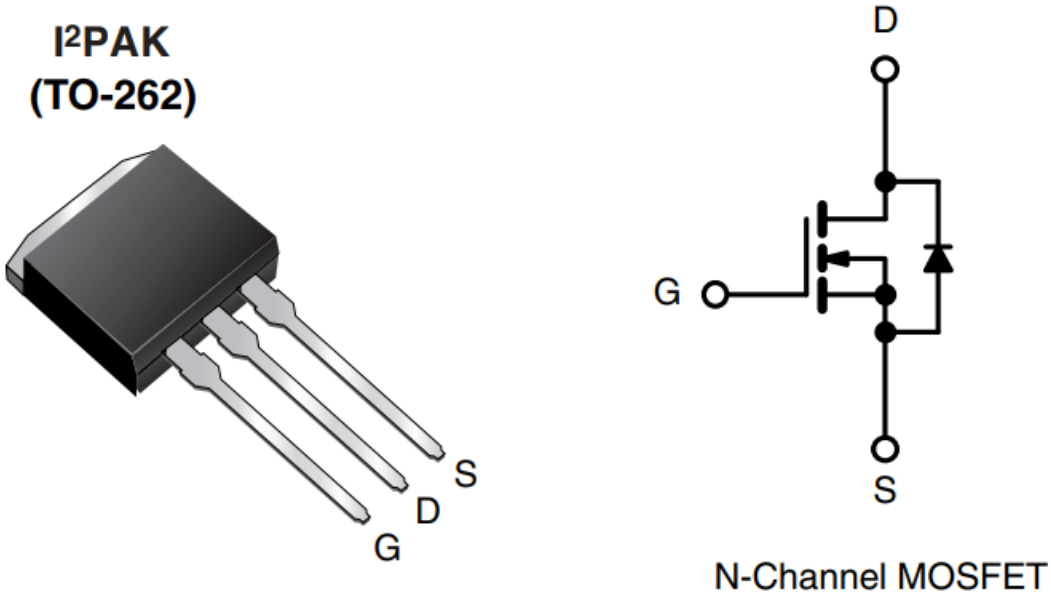

PRODUCT SUMMARY

PRODUCT SUMMARY		
V_{DS} (V)	500	
RDS(on) (W)	V_{GS} = 10 V	0.85
Q_g max. (nC)	63	
Q_{gs} (nC)	9.3	
Q_{gd} (nC)	32	
Configuration	Single	

ORDERING INFORMATION	
Package	I2PAK (TO-262)
Lead (Pb)-free and Halogen-free	SiHF840L-GE3
Lead (Pb)-free	IRF840LPbF

ABSOLUTE MAXIMUM RATINGS (T_C = 25 °C, unless otherwise noted)					
PARAMETER			**SYMBOL**	**LIMIT**	**UNIT**
Drain-Source Voltage			VDS	500	V
Gate-Source Voltage			VGS	± 20	V
Continuous Drain Current	V_{GS} at 10 V	T_C = 25 °C	I_D	8.0	A
		T_C = 100 °C		5.1	
Pulsed Drain Current a			IDM	32	
Linear Derating Factor				1.0	W/°C
Single Pulse Avalanche Energy b			EAS	510	mJ
Repetitive Avalanche Current a			IAR	8.0	A
Repetitive Avalanche Energy a			EAR	13	mJ
Maximum Power Dissipation	T_C = 25 °C		P_D	125	W
	T_C = 100 °C			50	
Peak Diode Recovery dV/dt c			dV/dt	3.5	V/ns
Operating Junction and Storage Temperature Range			TJ, Tstg	-55 to +150	°C
Soldering Recommendations (Peak temperature) d	for 10 s			300	

Notes

- a. Repetitive rating; pulse width limited by maximum junction temperature (see fig. 11)
- b. VDD = 50 V, starting TJ = 25 °C, L = 14 mH, Rg = 25 Ω, IAS = 8.0 A (see fig. 12)
- c. ISD ≤ 8.0 A, dI/dt ≤ 100 A/μs, VDD ≤ VDS, TJ ≤ 150 °C
- d. 1.6 mm from case

FEATURES

- Dynamic dV/dt rating
- Repetitive avalanche rated
- Fast switching
- Ease of paralleling
- Simple drive requirements
- Material categorization: for definitions of compliance please see **www.vishay.com/doc?99912**

Note

* This datasheet provides information about parts that are RoHS-compliant and / or parts that are non RoHS-compliant. For example, parts with lead (Pb) terminations are not RoHS-compliant. Please see the information /

tables in this datasheet for details

DESCRIPTION

Third generation power MOSFETs from Vishay provide the designer with best combination of fast switching, ruggedized device design, low on-resistance and cost-effectiveness.
The I2PAK (TO-262) is a power package capable of accommodating die sizes up to HEX-4. It provides th e highest power capability and lowest possible on-resistance . The I2PAK (TO-262) is suitable for high current applications because of its low internal connection resistance and ca n dissipate up to 2.0 W.

THERMAL RESISTANCE RATINGS

THERMAL RESISTANCE RATINGS				
PARAMETER	**SYMBOL**	**TYP.**	**MAX.**	**UNIT**
Maximum Junction-to-Ambient	RthJA	–	62	°C/W
Maximum Junction-to-Case (Drai n)	RthJC	–	1.0	

SPECIFICATION

SPECIFICATIONS (T_J = 25 °C, unless otherwise noted)							
PARAMETER	**SYMBOL**	**TEST CONDITIONS**		**MIN.**	**TYP.**	**MAX.**	**UNIT**
Static							
Drain-Source Breakdown Voltage	VDS	V_{GS} = 0 V, I_D = 250 µA		500	–	–	V
V_{DS} Temperature Coefficient	DV_{DS}/T_J	Reference to 25 °C, I_D = 1 mA		–	0.78	–	V/°C
Gate-Source Threshold Voltage	VGS(th)	V_{DS} = V_{GS}, I_D = 250 µA		2.0	–	4.0	V
Gate-Source Leakage	IGSS	V_{GS} = ± 20 V		–	–	± 100	nA
Zero Gate Voltage Drain Current	IDSS	V_{DS} = 500 V, V_{GS} = 0 V		–	–	25	µA
		V_{DS} = 400 V, V_{GS} = 0 V, T_J = 125 °C		–	–	250	
Drain-Source On-State Resistance	RDS(on)	V_{GS} = 10 V	I_D = 4.8 A b	–	–	0.85	W
Forward Transconductance	gfs	V_{DS} = 50 V, I_D = 4.8 A b		4.9	–	–	S
Dynamic							
Input Capacitance	Ciss	V_{GS} = 0 V, V_{DS} = 25 V, f = 1.0 MHz, see fig. 5		–	1300	–	pF
Output Capacitance	Coss			–	310	–	
Reverse Transfer Capacitance	Crss			–	120	–	
Total Gate Charge	Q_g			–	–	63	

Gate-Source Charge	Qgs	V_{GS} = 10 V	I_D = 8 A, V_{DS} = 400 V see fig. 6 and 13 b	–	–	9.3	nC
Gate-Drain Charge	Qgd			–	–	32	
Turn-On Delay Time	td(on)	V_{DD} = 250 V, I_D = 8.0 A R_g = 9.1 W, R_D = 31 W, see fig. 10 b		–	14	–	ns
Rise Time	t_r			–	23	–	
Turn-Off Delay Time uo	td(off)			–	49	–	
Fall Time	t_f			–	20	–	
Internal Drain Inductance	L_D	Between lead, D 6 mm (0.25″) from package and center of G die contact S		–	4.5	–	nH
Internal Source Inductance	L_S			–	7.5	–	
Gate Input Resistance	R_g	f = 1 MHz, open drain		0.6	–	2.8	W
Drain-Source Body Diode Characteristics							
Continuous Source-Drain Diode Current	I_S	MOSFET symbol D showing the integral reverse G p – n junction diode S		–	–	8.0	A
Pulsed Diode Forward Current a	ISM			–	–	32	
Body Diode Voltage	VSD	T_J = 25 °C, I_S = 8 A, V_{GS} = 0 V b		–	–	2.0	V
Body Diode Reverse Recovery Time	trr	T_J = 25 °C, I_F = 8.0 A, dI/dt = 100 A/µs b		–	460	970	ns
Body Diode Reverse Recovery Charge	Qrr			–	4.2	8.9	µC
Forward Turn-On Time	ton	Intrinsic turn-on time is negligible (turn-on is dominated by L_S and L_D)					

Notes

- a. Repetitive rating; pulse width limited by maximum junction temperature (see fig. 11)
- b. Pulse width ≤ 300 µs; duty cycle ≤ 2 %

TYPICAL CHARACTERISTICS

(25 °C, unless otherwise noted)

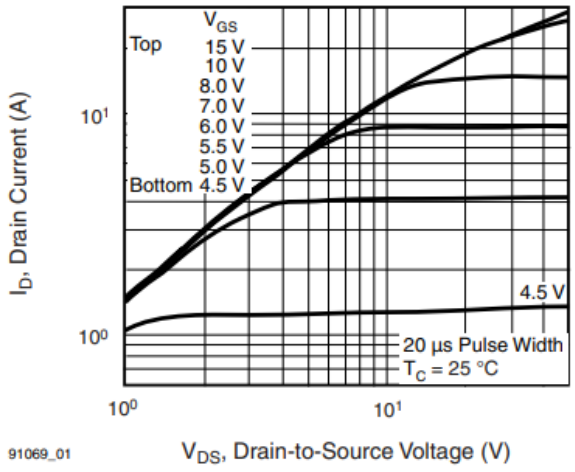

Fig. 1 - Typical Output Characteristics, T_C = 25 °C

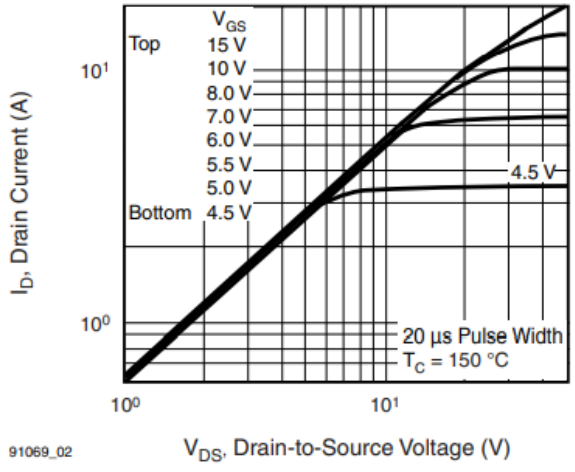

Fig. 2 - Typical Output Characteristics, T_C = 150 °C

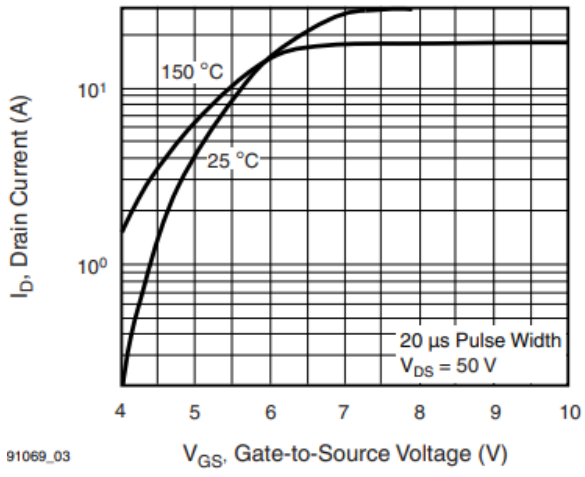

Fig. 3 - Typical Transfer Characteristics

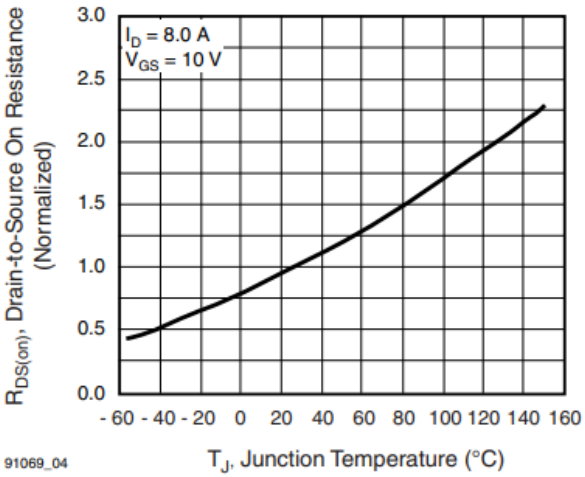

Fig. 4 - Normalized On-Resistance vs. Temperature

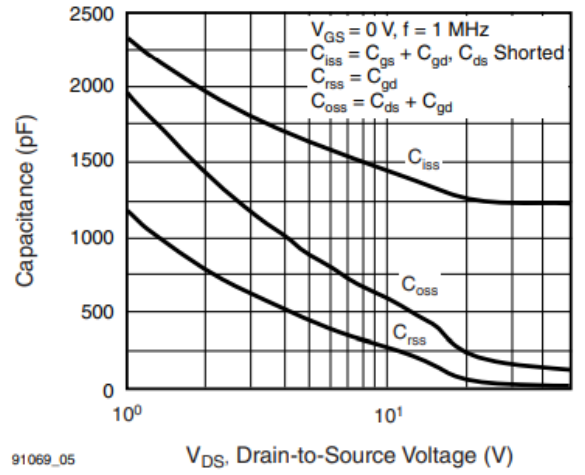

Fig. 5 - Typical Capacitance vs. Drain-to-Source Voltage

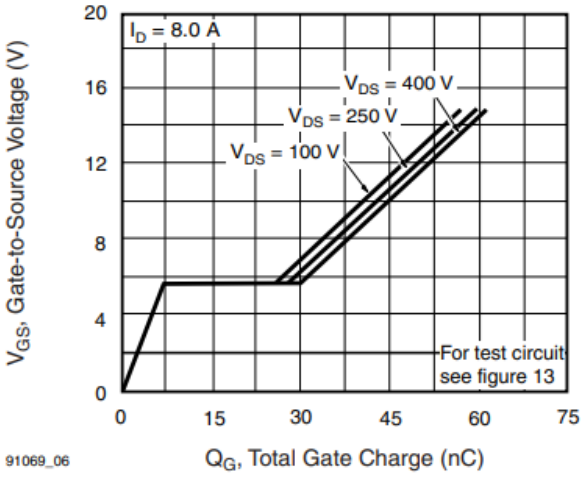

Fig. 6 - Typical Gate Charge vs. Drain-to-Source Voltage

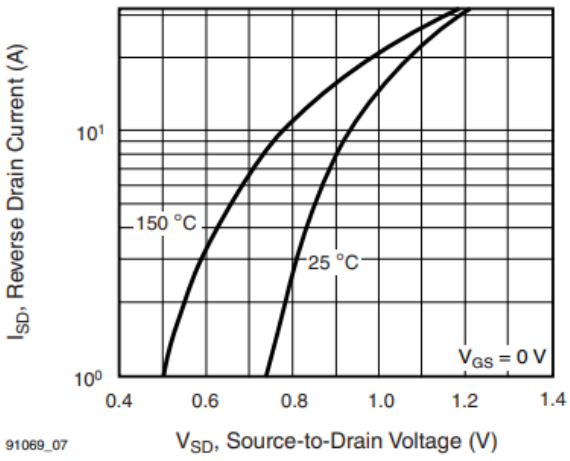

Fig. 7 - Typical Source-Drain Diode Forward Voltage

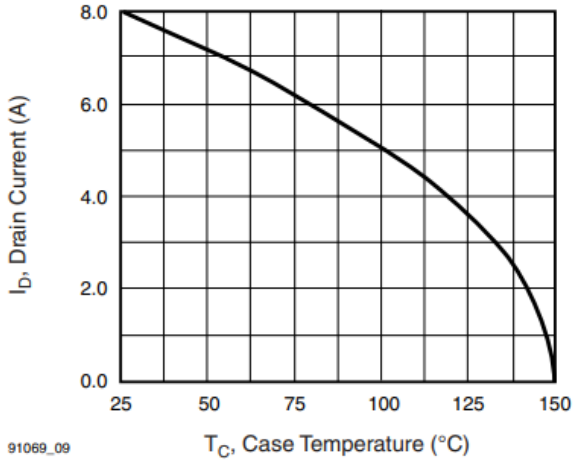

Fig. 9 - Maximum Drain Current vs. Case Temperature

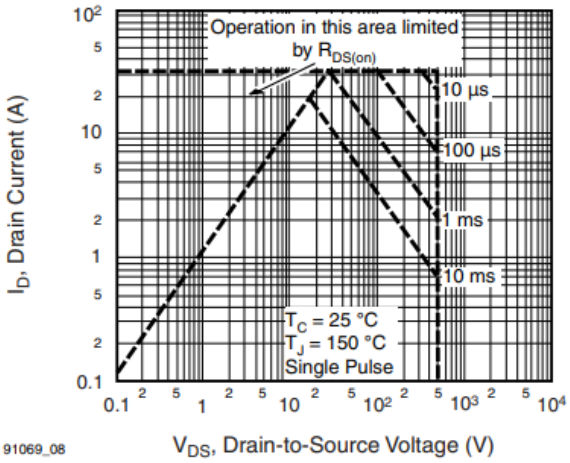

Fig. 8 - Maximum Safe Operating Area

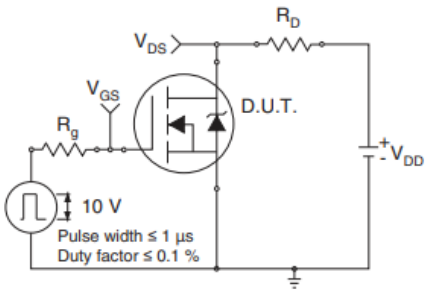

Fig. 10a - Switching Time Test Circuit

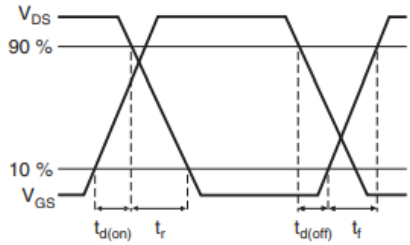

Fig. 10b - Switching Time Waveforms

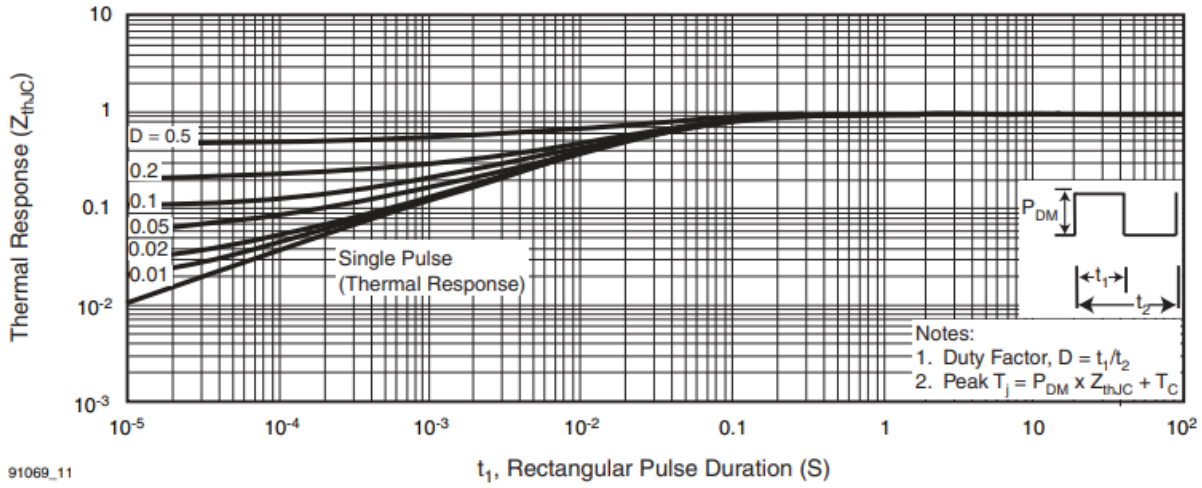

Fig. 11 - Maximum Effective Transient Thermal Impedance, Junction-to-Case

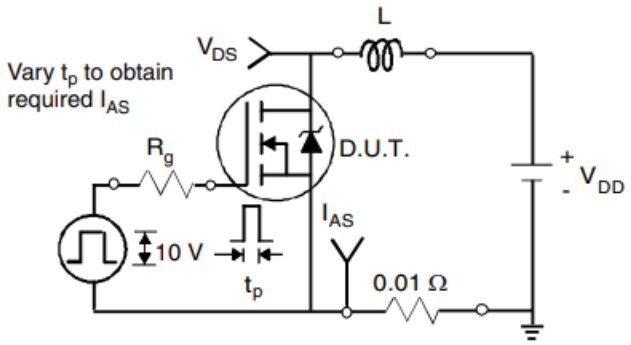

Fig. 12a - Unclamped Inductive Test Circuit

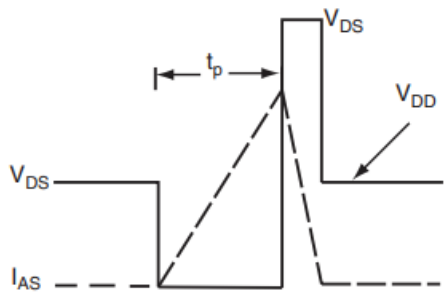

Fig. 12b - Unclamped Inductive Waveforms

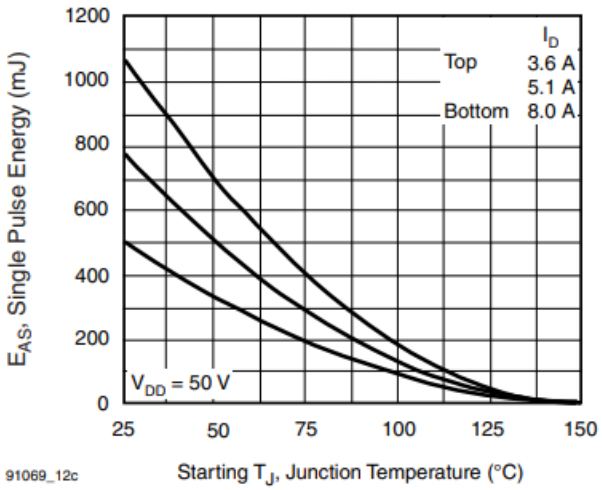

Fig. 12c - Maximum Avalanche Energy vs. Drain Current

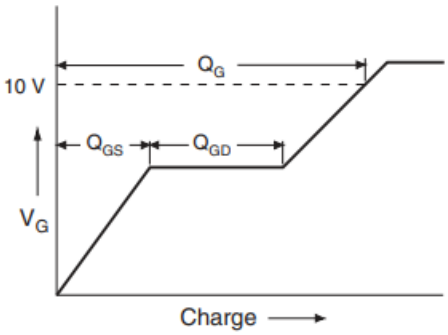

Fig. 13a - Basic Gate Charge Waveform

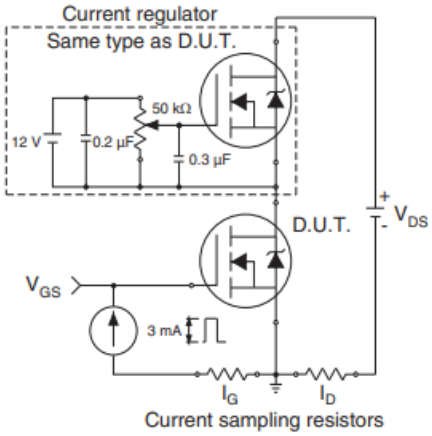

Fig. 13b - Gate Charge Test Circuit

Peak Diode Recovery dV/dt Test Circuit

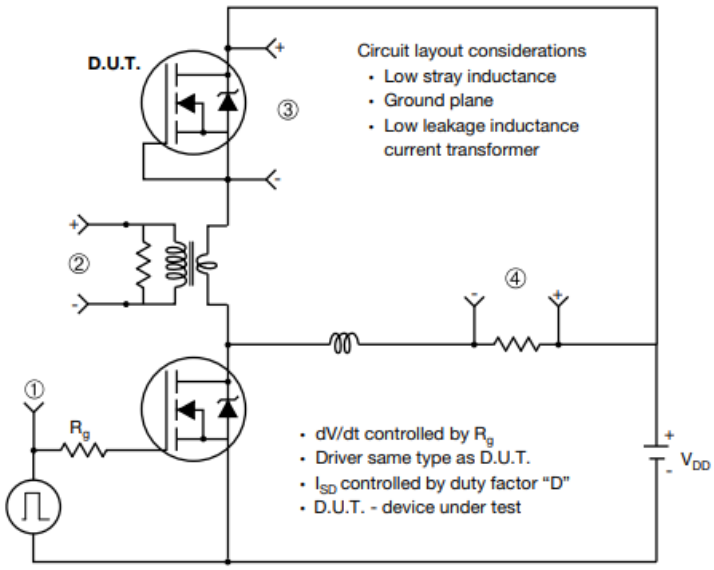

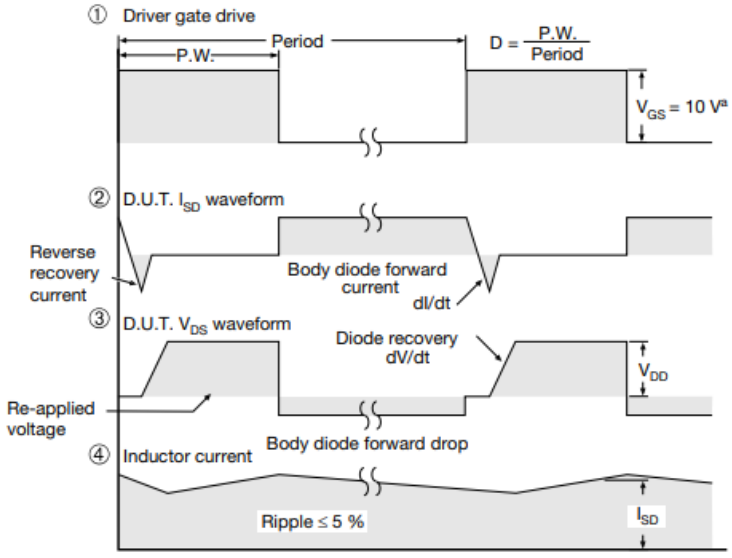

Note

a. V_{GS} = 5 V for logic level devices

Fig. 14 - For N-Channel

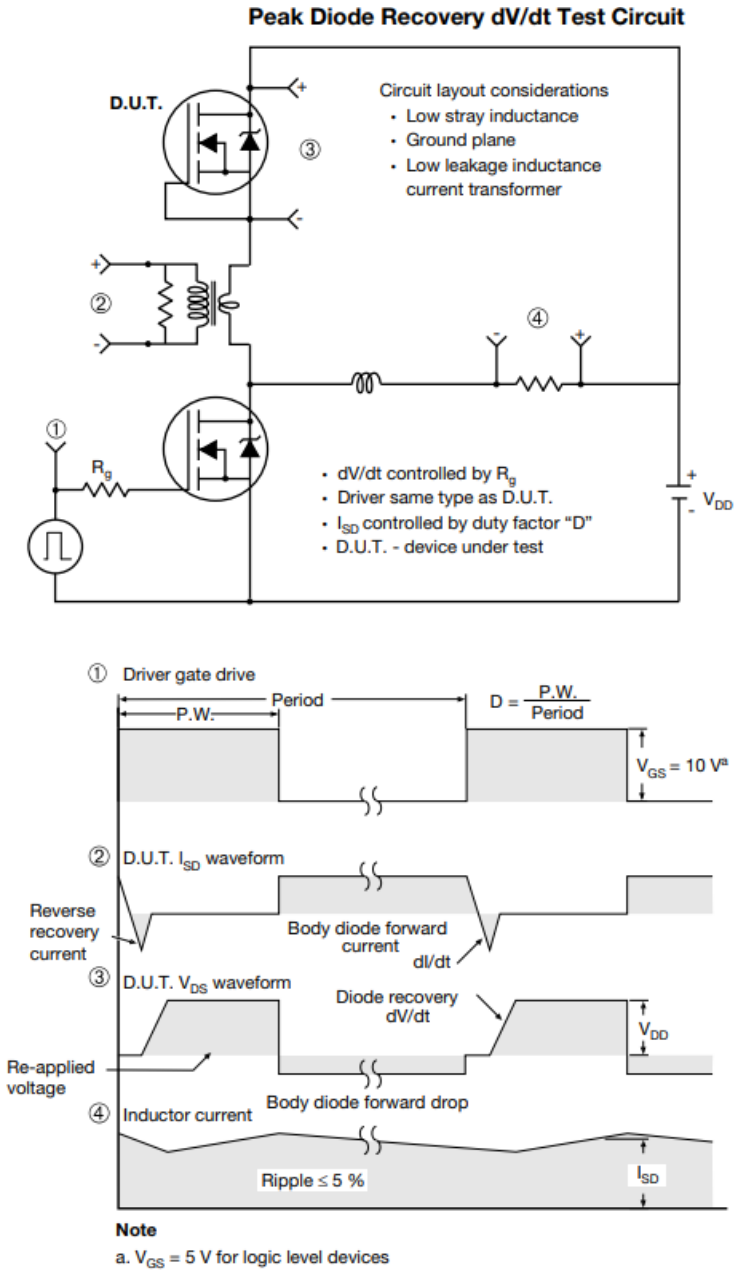

Fig. 14 - For N-Channel

Vishay Siliconix maintains worldwide manufacturing capability. Products may be manufactured at one of several qualified locations. Reliability data for Silicon Technology and Package Reliability represent a composite of all qualified locations. For related documents such as package/tape drawings, part marking, and reliability data, see www.vishay.com/ppg?91069.

Package Information

TO-263AB (HIGH VOLTAGE)

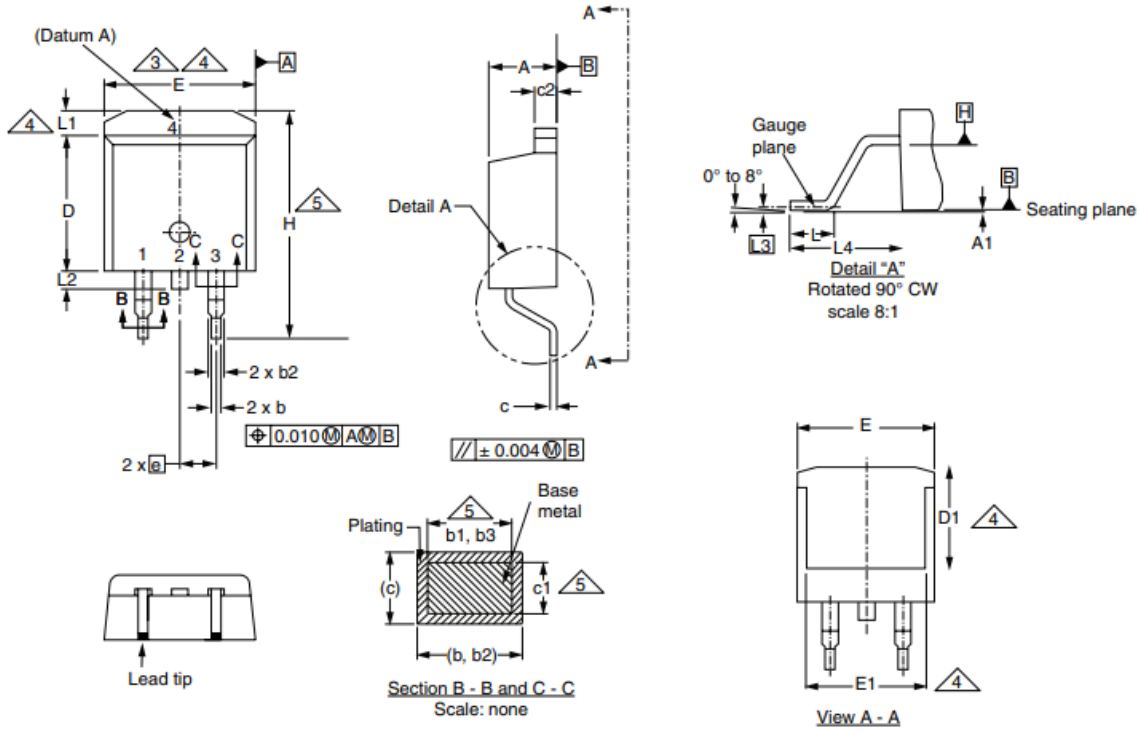

	MILLIMETERS		INCHES	
DIM.	MIN.	MAX.	MIN.	MAX.
A	4.06	4.83	0.160	0.190
A1	0.00	0.25	0.000	0.010
b	0.51	0.99	0.020	0.039
b1	0.51	0.89	0.020	0.035
b2	1.14	1.78	0.045	0.070
b3	1.14	1.73	0.045	0.068
c	0.38	0.74	0.015	0.029
c1	0.38	0.58	0.015	0.023
c2	1.14	1.65	0.045	0.065
D	8.38	9.65	0.330	0.380

	MILLIMETERS		INCHES	
DIM.	MIN.	MAX.	MIN.	MAX.
D1	6.86	-	0.270	-
E	9.65	10.67	0.380	0.420
E1	6.22	-	0.245	-
e	2.54 BSC		0.100 BSC	
H	14.61	15.88	0.575	0.625
L	1.78	2.79	0.070	0.110
L1	-	1.65	-	0.066
L2	-	1.78	-	0.070
L3	0.25 BSC		0.010 BSC	
L4	4.78	5.28	0.188	0.208

ECN: S-82110-Rev. A, 15-Sep-08
DWG: 5970

Notes

1. Dimensioning and tolerancing per ASME Y14.5M-1994.
2. Dimensions are shown in millimeters (inches).
3. Dimension D and E do not include mold flash. Mold flash shall not exceed 0.127 mm (0.005″) per side. These dimensions are measured at the outmost extremes of the plastic body at datum A.
4. Thermal PAD contour optional within dimension E, L1, D1 and E1.
5. Dimension b1 and c1 apply to base metal only.
6. Datum A and B to be determined at datum plane H.
7. Outline conforms to JEDEC outline to TO-263AB.

I2PAK (TO-262) (HIGH VOLTAGE)

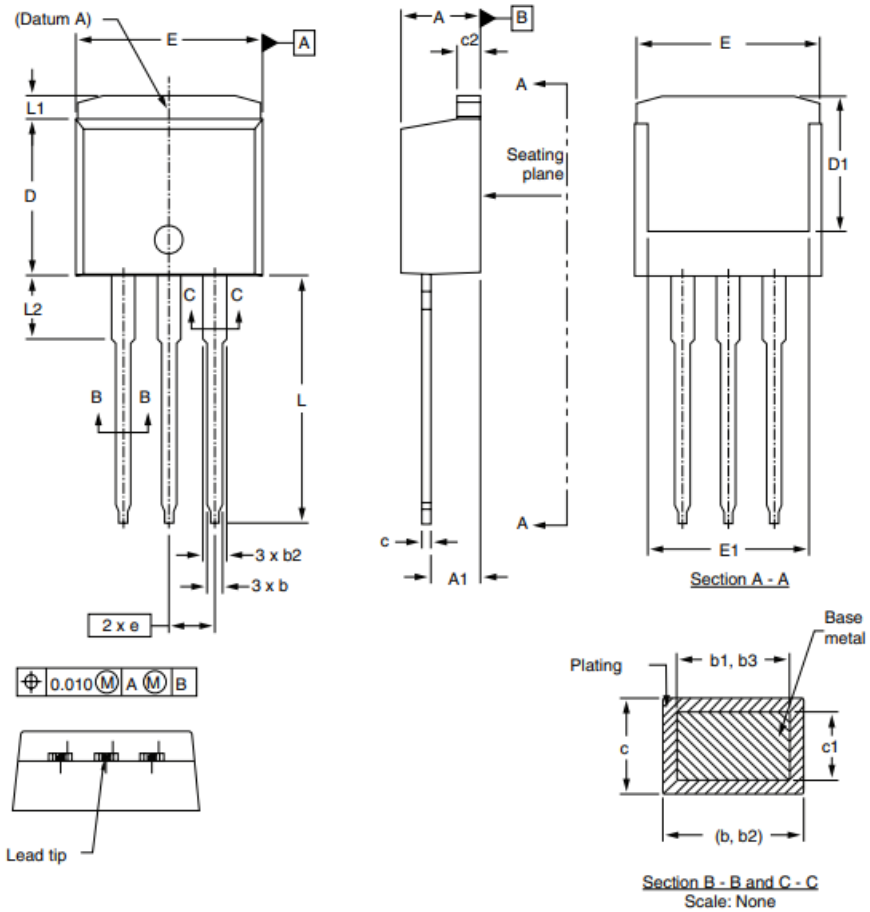

	MILLIMETERS		INCHES	
DIM.	MIN.	MAX.	MIN.	MAX.
A	4.06	4.83	0.160	0.190
A1	2.03	3.02	0.080	0.119
b	0.51	0.99	0.020	0.039
b1	0.51	0.89	0.020	0.035
b2	1.14	1.78	0.045	0.070
b3	1.14	1.73	0.045	0.068
c	0.38	0.74	0.015	0.029
c1	0.38	0.58	0.015	0.023
c2	1.14	1.65	0.045	0.065

	MILLIMETERS		INCHES	
DIM.	MIN.	MAX.	MIN.	MAX.
D	8.38	9.65	0.330	0.380
D1	6.86	-	0.270	-
E	9.65	10.67	0.380	0.420
E1	6.22	-	0.245	-
e	2.54 BSC		0.100 BSC	
L	13.46	14.10	0.530	0.555
L1	-	1.65	-	0.065
L2	3.56	3.71	0.140	0.146

ECN: S-82442-Rev. A, 27-Oct-08
DWG: 5977

Notes

1. Dimensioning and tolerancing per ASME Y14.5M-1994.
2. Dimension D and E do not include mold flash. Mold flash shall not exceed 0.127 mm per side. These dimensions are measured at the outmost extremes of the plastic body.
3. Thermal pad contour optional within dimension E, L1, D1, and E1.
4. Dimension b1 and c1 apply to base metal only.

RECOMMENDED MINIMUM PADS FOR D2PAK: 3-Lead

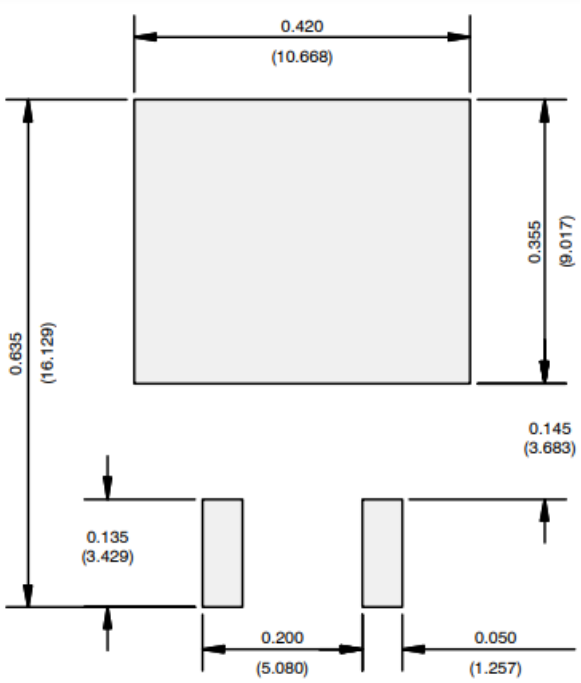

Recommended Minimum Pads
Dimensions in Inches/(mm)

Legal Disclaimer Notice

Disclaimer

- ALL PRODUCT, PRODUCT SPECIFICATIONS AND DATA ARE SUBJECT TO CHANGE WITHOUT NOTICE TO IMPROVE RELIABILITY, FUNCTION OR DESIGN OR OTHERWISE.
  Vishay Intertechnology, Inc., its affiliates, agents, and employees, and all persons acting on its or their behalf (collectively, “Vishay”), disclaim any and all liability for any errors, inaccuracies or incompleteness contained in any datasheet or in any other disclosure relating to any product.
- Vishay makes no warranty, representation or guarantee regarding the suitability of the products for any particular purpose or the continuing production of any product. To the maximum extent permitted by applicable law, Vishay disclaims (i) any and all liability arising out of the application or use of any product, (ii) any and all liability, including without limitation special, consequential or incidental damages, and (iii) any and all implied warranties, including warranties of fitness for particular purpose, non-infringement and merchantability.
- Statements regarding the suitability of products for certain types of applications are based on Vishay’s knowledge of typical requirements that are often placed on Vishay products in generic applications. Such statements are not binding statements about the suitability of products for a particular application. It is the customer’s responsibility to validate that a particular product with the properties described in the product specification is suitable for use in a particular application. Parameters provided in datasheets and / or specifications may vary in different applications and performance may vary over time. All operating parameters, including typical parameters, must be validated for each customer application by the customer’s technical experts. Product specifications do not expand or otherwise modify Vishay’s terms and conditions of purchase, including but not limite d to the warranty expressed therein.
- Hyperlinks included in this datasheet may direct users to third-party websites. These links are provided as a convenience an d for informational purposes only. Inclusion of these hyperlinks does not constitute an endorsement or an approval by Vishay o f any of the products, services or opinions of the corporation,

organization or individual associated with the third-party website. Vishay disclaims any and all liability and bears no responsibility for the accuracy, legality or content of the third-party website or for that of subsequent links.

- Except as expressly indicated in writing, Vishay products are not designed for use in medical, life-saving, or life-sustainin g applications or for any other application in which the failure of the Vishay product could result in personal injury or death. Customers using or selling Vishay products not expressly indicated for use in such applications do so at their own risk. Please contact authorized Vishay personnel to obtain written terms and conditions regarding products designed for such applications.
  No license, express or implied, by estoppel or otherwise, to any intellectual property rights is granted by this document or by any conduct of Vishay. Product names and markings noted herein may be trademarks of their respective owners.
- © 2024 VISHAY INTERTECHNOLOGY, INC. ALL RIGHTS RESERVED

Revision: 01-Jan-2024

Document Number: 91000

For technical questions, contact:

THIS DOCUMENT IS SUBJECT TO CHANGE WITHOUT NOTICE. THE PRODUCTS DESCRIBED HEREIN AND THIS DOCUMENT ARE SUBJECT TO SPECIFIC DISCLAIMERS, SET FORTH AT **www.vishay.com/doc?91000**

Documents / Resources

	**VISHAY IRF840L Power MOSFET** [pdf] Owner's Manual IRF840L Power MOSFET, IRF840L, Power MOSFET, MOSFET

References

- **Vishay Intertechnology: Passives & Discrete Semiconductors**
- **User Manual**

Manuals+, Privacy Policy

This website is an independent publication and is neither affiliated with nor endorsed by any of the trademark owners. The "Bluetooth®" word mark and logos are registered trademarks owned by Bluetooth SIG, Inc. The "Wi-Fi®" word mark and logos are registered trademarks owned by the Wi-Fi Alliance. Any use of these marks on this website does not imply any affiliation with or endorsement.