Installation Manual

ENFORCER®

SA-026

Mini Timer Module



The ENFORCER SA-026 is a low-voltage miniature timer module which operates on 12～24V AC or DC. It can be used to modify the activation time of a momentary contact switch for 1～60 sec. via a field-adjustable VR (variable resistor) rotary knob. It is ideal for electrical or electromagnetic locks which do not have a built-in time delay function.

Features

- Compact size: 1.2" x 2.2" x 0.7" (30 x 55 x 17mm).
- Operating voltage: 12～24 volts AC or DC.
- Relay output: Form-C (SPDT), via terminal block.
- Contact rating: 3 Amps @ 24VDC.
- Built-in buzzer output: (100mA @ 24VDC).
- Includes double-sided foam tape.

Also available:

Push-to-Exit plates with built-in timers.

SD-7201GA-PT1



SD-7202GC-PT



Sample Application: Fail-Safe Electromagnetic Locks

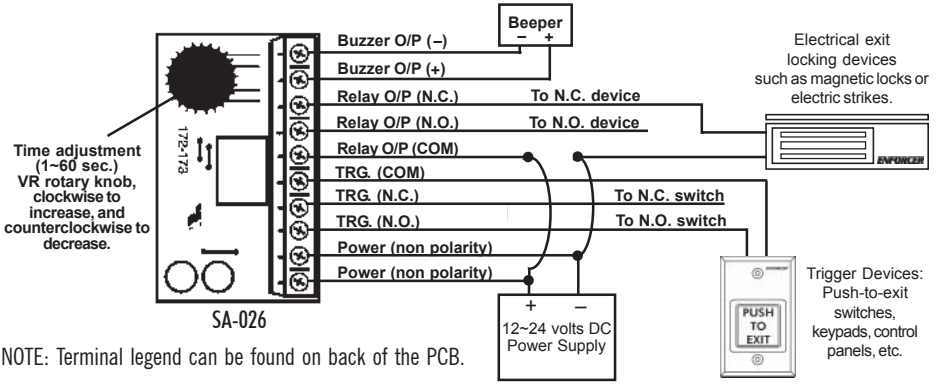

NOTE: Terminal legend can be found on back of the PCB.

WARRANTY: This SECO-LARM product is warranted against defects in material and workmanship while used in normal service for a period of one (1) year from the date of sale to the original consumer customer. SECO-LARM's obligation is limited to the repair or replacement of any defective part if the unit is returned, transportation prepaid, to SECO-LARM.
This Warranty is void if damage is caused by or attributed to acts of God, physical or electrical misuse or abuse, neglect, repair, or alteration, improper or abnormal usage, or faulty installation, or if for any other reason SECO-LARM determines that such equipment is not operating properly as a result of causes other than defects in material and workmanship.
The sole obligation of SECO-LARM, and the purchaser's exclusive remedy, shall be limited to replacement or repair only, at SECO-LARM's option. In no event shall SECO-LARM be liable for any special, collateral, incidental, or consequential personal or property damages of any kind to the purchaser or anyone else.

NOTICE: The information and specifications printed in this manual are current at the time of publication. However, the SECO-LARM policy is one of continual development and improvement. For this reason, SECO-LARM reserves the right to change specifications without notice. SECO-LARM is also not responsible for misprints or typographical errors.
Copyright © 2006 SECO-LARM U.S.A., Inc. All rights reserved. This material may not be reproduced or copied, in whole or in part, without the written permission of SECO-LARM.

SECO-LARM® U.S.A., Inc.
16842 Millikan Avenue, Irvine, CA 92606
Tel: 800-662-0800 / 949-261-2999 Fax: 949-261-7326
Website: www.seco-larm.com
E-mail: sales@seco-larm.com

FILE: DT/DTP/MiSA026_06A.pmd
ORDER PART# 763-153%
PITSW1