Troubleshooting

FPM reading is displayed but unit is not flashing:

- *Flash tube may need to be replaced (see "Flash Tube Replacement" section)*

Stroboscope is in external trigger mode, no flash:

- *Check flash tube. Replace if necessary*
- *Check for damaged wiring and/or loose pin connections*

Stroboscope is in internal trigger mode, no flash:

- *Check flash tube. Replace if necessary*
- *Check for damaged wiring and/or loose pin connections*

Dimensions & Specifications

DT-311N

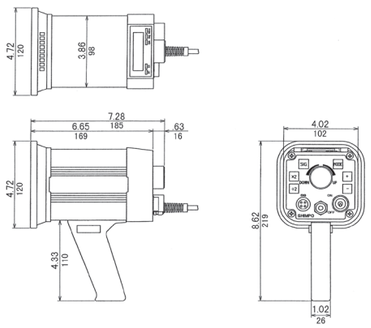

DT-315N

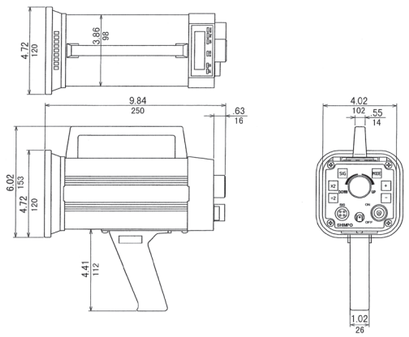

STROBOSCOPE SPECIFICATIONS			
Model		DT-311N	DT-315N
INTERNAL MODE	Flashing Range	40.0 – 35,000 RPM	
	Accuracy	± 0.01% of reading	
	Resolution	0.1 RPM:40.0 – 4,999.9 RPM 0.2 RPM:5,000 – 7,999.8 RPM 0.5 RPM:8,000 – 9,999.5 RPM 1 RPM:10,000 – 35,000 RPM	
	Phase Shift	Use +/– push buttons (360– in 6 seconds)	
	Display Update Time	0.2 sec approx.	
	Output Signal	Synchronous, 400 msec. Pulse output, 0 to +12 VDC amplitude (approx.), 4.7 kΩ impedance	
	Rate Multiplier/Divider	Multiply by 2,divide by 2	
EXTERNAL MODE	Flashing Range	0.0 – 35,000 RPM	
	Accuracy	± 0.01% ± 1 digit	
	Phase Shift	0 – 359″ with 1° resolution	
	Delay Time	0 – 2,000 msec from 40 – 10,000 RPM	
	External Trigger Input Signal	LO level:0 – 0.8 VDC, HI level:2.5 – 12 VDC, pulse width 50 μ sec min.	
	Input Impedance	4.7k Ω at 12 V / 6.8k Ω at 0V	
GENERAL	Display	5 digits,10 mm high, LED	
	Flash Tube Power / Life	Xenon, 10 W max. (100 million flashes)	
	Flash Duration	10 – 40 μ sec	
	Sensor Power Supply	12 VDC (40 mA)	
	Low Battery Indicator	Display shows all L's	
	Power Requirement	230 VAC ± 10% 60/50 Hz, 30 VA (specify voltage)	Internal Battery Pack
	Operating Temperature Range	0 – 40℃	
	Weight	1.2 kg	2 kg
	Dimensions	185 x 120 x 120 mm	250 x 120 x 120 mm
	Standard Accessories	Handle	Handle, AC charger / adapter

NIDEC-SHIMPO CORPORATION

:1 Terada Kohtari, Nagaokakyo-city, Kyoto, 617-0833 Japan
Phone: 81-75-958-3608 FAX:81-75-958-3647

Nidec
All for dreams

91951C

STROBOSCOPE

DT-311N / DT-315N

Instruction Manual

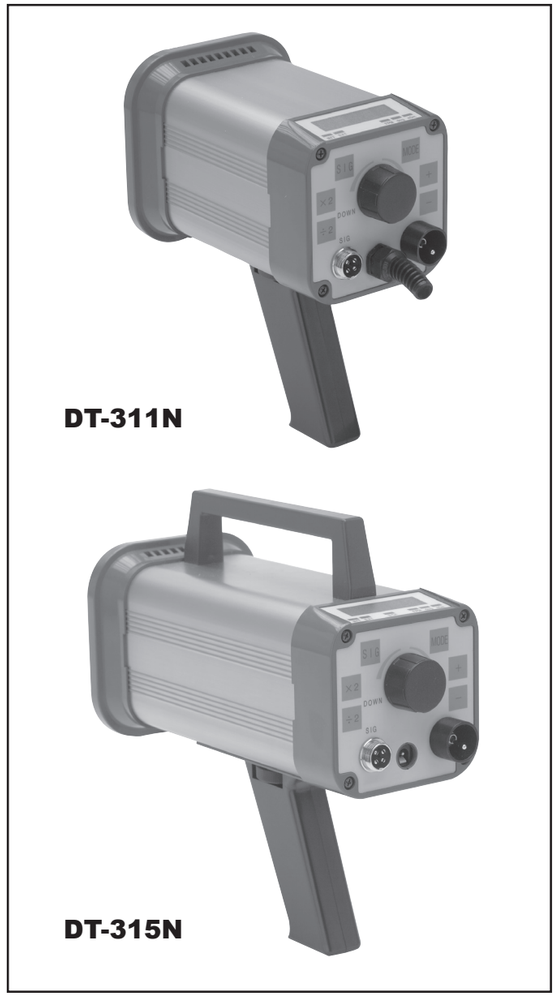

Congratulations on your purchase of a Shimpo DT-311N or DT-315N stroboscope/digital tachometer. We trust you will enjoy many years of professional results from your Shimpo product.

Please read the entire instruction manual thoroughly before initial set-up and operation; the information contained herein will aid you in operating your Shimpo stroboscope safely and with excellent results.

If you have any questions regarding our product(s), call your local Shimpo representative or contact Shimpo Instruments directly for assistance.

Inspection/Standard Accessories

If upon delivery shipping damage is detected, do not operate the unit. Notify shipping carrier immediately for damage claim instructions. Refer to nameplate and record serial number for future reference. Items included with the DT-311N/DT-315N are:

- *(1) Handle*
- *(1) AC charger/adapter (Model 315N only)*

Features and Benefits

Shimpo's DT-311N and DT-315N stroboscopes/digital tachometers incorporate the latest microprocessor technology for visual inspection applications:

- *Aluminum construction provides exceptional durability*
- *High polish and focused reflector eliminates "blind" viewing areas*
- *External trigger allows unit to be automatically synchronized with equipment*
- *Continuous duty cycle eliminates need to shut down for cooling*
- *Phase shift allows visual analysis of rotating/reciprocating objects*
- *High accuracy (±0.01% of reading) is ideal for QC inspection and process control*
- *Synchronous output enables strobe to drive other strobes*
- *Flash timer control conserves flash tube life*

Important Safety Instructions

CAUTION — Do not operate or store instrument in the following places: explosive areas; near water, oil, dust, or chemicals; areas where temperature is above 40°C.

CAUTION — Do not look at the emitted light for long periods of time; it can be harmful to the eyes.

CAUTION — Do not disassemble or repair unit while in operation.

Set-up

The DT-311N and DT-315N may be operated handheld or else mounted on a tripod for added convenience.

To mount the strobe on a tripod (or any other mounting surface), use screw 1/4-20unc, length 8mm or shorter for the tripod screw hole on the bottom.

Display Panel

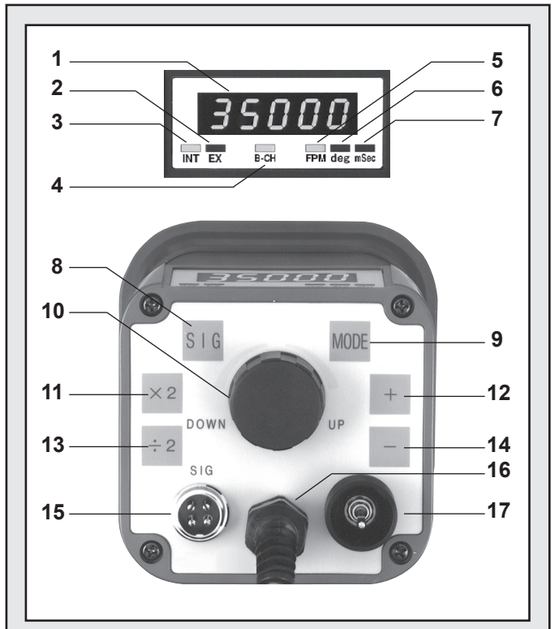

1. **LED display**: Displays function and value
2. **EXT**: External mode indicator
3. **INT**: Internal mode indicator
4. **B-CH**: Battery charge indicator (DT-315N only)
5. **rpm**: Flash per minute indicator
6. **deg**: Phase shift degree indicator
7. **mSec**: Millisecond delay time indicator
8. **Signal switch**: Switches the unit from the external mode to the internal mode (and vice-versa)
9. **Display mode switch**: When unit is set to the external mode, the strobe will switch to rpm/deg/msec each time "MODE" is depressed
   rpm — Displays flashes per minute
   External input 0-35,000 RPM (FPM)
   deg — Displays flash delay in degrees
   msec — Displays flash delay in msec
10. **Setter:** Changes the flashing rate
11. **(x2) Switch:** In the internal mode, pressing "x2" doubles the flashing rate
12. **(+) Switch:** In the internal mode, when object appears to be standing still, pressing "+" will give the illusion that the object is moving towards the rotating direction at a speed of 1 rotation in 6 seconds
13. **(÷2) Switch:** In the internal mode, pressing "÷2" divides the flashing rate by two
14. **(-) Switch:** In the internal mode, when object appears to be standing still, pressing "-" will give the illusion that the object is moving in reverse at a speed of 1 rotation in 6 seconds
15. **Input and output connector:**
    PIN #1: +12V
    PIN #2: Synch output signal
    PIN #3: Input signal
    PIN #4: 0V
16. **Power cord (DT-311N) / AC adapter (DT-315N)**
17. **Power switch**

Operation

True RPM Measurement
Shimpo stroboscopes are DUAL function instruments that give the operator the illusion of "stopped motion" where in actuality the equipment under observation is in a moving state. By adjusting the flash rate, equipment in motion appears to be standing still. With a slight adjustment, movement can be viewed in apparent slow motion, which enables the operator or observer to study the process in action. All Shimpo stroboscopes can measure rotational

(RPM) or reciprocating (strokes per minute) speeds with the same high precision as with an electronic digital tachometer.

To measure true revolutions per minute (RPM):

1. "Mark" the object to be measured by either visually noting an inherent distinguishing characteristic (such as a label, scratch, etc.) or physically marking the object with a small piece of tape, pencil mark, etc.
2. Firmly plug in power cord.
3. Turn power switch on.
4. Turn setter from highest RPM downward.
5. The true RPM can be noted once the action appears frozen **and** the first **single** image of the "mark" appears (see chart below and accompanying diagram for further explanation).
6. To verify RPM reading, press ",2"; a single image should appear again.

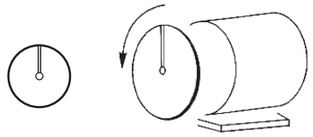

STOPPED IMAGE

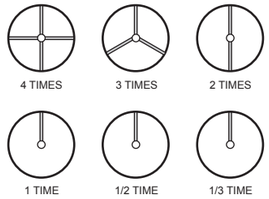

Shaft Rotation (RPM)	Flashes (RPM)	Flashes / RPM Shaft	Stopped Images
At 1,500 RPM	6,000	4 times	4
	4,500	3 times	3
	3,000	2 times	2
	1,500	1 time	1
	750	1/2 time	1
	500	1/3 time	1

Internal Triggering Mode
To operate the stroboscope in internal triggering mode:

1. Firmly plug in power cord.
2. Turn power switch on.
3. If internal indicator is not on, press "SIG"; the INT light will then turn on.
4. Aim light beam at object under observation. The optimal distance between the strobe and moving object is approximately 2 feet.
5. Measure RPM by turning the setter to adjust the flashing rate to the rotational speed of the object.

NOTE: To achieve a particular rate quickly, use the "x2" or ",2" switches and then the setter for fine tuning.

NOTE: Once the internal timer has expired, the strobe will stop flashing and the display will flash rapidly. To restart the strobe, turn power switch off, then on, and the cycle will repeat.

Operation

External Triggering Mode
To operate the stroboscope in external triggering mode:

1. Connect external trigger or sensor wires according to connector pin designation:
   1 +12V (for powering sensor)
   2 Synch output signal
   3 External input signal
   4 0V (common)
2. Firmly plug in power cord.
3. Turn power switch on.
4. If INT lamp is on, press "SIG" until EXT lamp turns on.
5. Press "MODE" to select proper mode:
   rpm — Light will flash in correspondence with input signal; the input signal will be calculated into RPM and displayed.
   deg — One cycle of input signal is 360°. A delayed angle will be displayed from 0 up to 359°. (The delayed angle can be changed by turning the knob setting as previously described).
   msec — The above delayed angle will be displayed in msec.

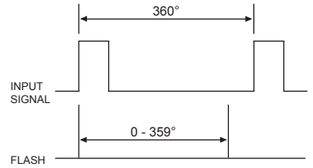

NOTE: If the input signal frequency exceeds upper or lower limits, the alarm dashes (-----) will be displayed and the strobe will stop flashing.

NOTE: Once the internal timer has expired, the strobe will stop flashing and the display will flash rapidly. To restart the strobe, turn power switch off, then on, and the cycle will repeat.

Synchronous Output Signal
For triggering and controlling additional stroboscopes, the synchronous output signal appears on pin #2 (see below).

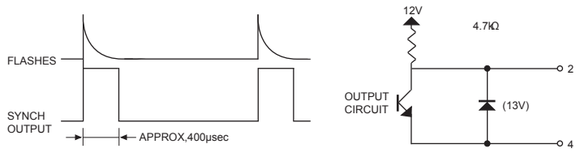

RPM Display Mode
If the input signal exceeds 585Hz, the upper dashes on the digital display will be flashing:

----- upper dashes

If the input signal is lower than 0.67Hz, the lower dashes on the digital display will be flashing:

----- lower dashes

Deg/msec Display Mode
If the input signal exceeds 167Hz, the upper dashes on the digital display will be flashing:

(deg) ----- upper dashes ----- (msec)

If the input signal is lower than 0.67Hz, the lower dashes on the digital display will be flashing:

(deg) ----- lower dashes ----- (msec)

Memory
The following parameters are set at the factory:

- *Decimal point: autorange*
- *Internal timer: continuous*
- *External trigger edge: L-H (Lo to Hi)*

These parameters can be changed in the field to facilitate different situations. To change any of the above parameters, follow these steps:

1. Turn power on.
2. Make sure that INT lamp is on. If not, press "SIG" until it turns on.
3. Change the desired memory parameter:
   a. *To change the decimal point* — Press ",2" and "-" at the same time for approximately 2 seconds until display alternates between —1— and 0.0. Press "+". The display will freeze and show 0.0. Change decimal point accordingly by pressing "+". If 0.0 is selected the decimal point is in the autorange mode. If 0 is selected the decimal point is eliminated throughout the entire range.
   b. *To change the internal timer* — Press MODE. The display will alternate between —2— and 0; press "+". The display will freeze to 0. Use the setter to set timer anywhere between 1 and 120 minutes.
   c. *To change the trigger edge or the external mode* — Press MODE. The display will alternate between —3— and L-H. The external trigger edge is set from the factory to occur during the positive transition of the incoming pulse. To change it to the negative transition, press "+". Display will change from L-H to H-L.
4. Press "SIG" to go back to normal operation.

NOTE: the above settings can be checked quickly by performing steps A to C as described above and then pressing "SIG".

Battery Charge (DT-315N Only)

If battery is low, "LLLLL" is displayed and display will eventually disappear. Charge battery as follows:

1. Turn power off.
2. Insert AC adapter/charger plug into the strobe receptacle (**CAUTION:** charge the unit only with the provided AC adapter/charger).
3. B-CH lamp will be lit during battery charge; within 2 hours the battery should be charged completely.

NOTE: The adapter/charger may be used as a power supply to power the strobe continuously.

Battery Replacement (DT-315N Only)

The life of the built-in battery should last for approximately 300 charges. If the time period between recharges becomes increasingly shorter, then replace battery with a new one.

Flash Tube Replacement

When FPM reading is displayed but unit is not flashing, flash tube may need to be replaced:

1. Unplug line cord from power line.
2. Turn power switch off (wait a few minutes until stroboscope is cool before proceeding).
3. Remove protective window by removing the 4 screws.
4. Use tube removing tool provided: insert tool all the way and turn clockwise until tool locks. Pull out tube.
5. Install new flash tube using the removing tool.
6. Replace protective window.
7. Mount reflector in the center so that the reflector will not interfere with the screw spacer on the corners.