

VISHAY IRF840 Siliconix Power MOSFET Owner's Manual

Contents

1 VISHAY IRF840 Siliconix Power MOSFET
2 FEATURES
3 DESCRIPTION
4 TYPICAL CHARACTERISTICS
5 Peak Diode Recovery dv/dt Test Circuit
6 TO-220-1
7 Package Picture
8 Disclaimer
9 Documents / Resources
9.1 References
10 Related Posts

VISHAY IRF840 Siliconix Power MOSFET



FEATURES

- Dynamic dV/dt rating
- Repetitive avalanche rated
- Fast switching
- Ease of paralleling
- Simple drive requirements
- Material categorization: for definitions of compliance please see **www.vishay.com/doc?99912**

  Note

  * This datasheet provides information about parts that are RoHS-compliant and / or parts that are non RoHS-compliant. For example, parts with lead (Pb) terminations are not RoHS-compliant. Please see the information / tables in this datasheet for details

DESCRIPTION

Third generation power MOSFETs from Vishay provide the designer with the best combination of fast switching, ruggedized device design, low on-resistance and cost-effectiveness.
The TO-220AB package is universally preferred for all commercial-industrial applications at power dissipation levels to approximately 50 W. The low thermal resistance and low package cost of the TO-220AB contribute to its wide acceptance throughout the industry.

PRODUCT SUMMARY		
V_{DS} (V)	500	
RDS(on) (W)	V_{GS} = 10 V	0.85
Q_g max. (nC)	63	
Q_{gs} (nC)	9.3	
Q_{gd} (nC)	32	
Configuration	Single	

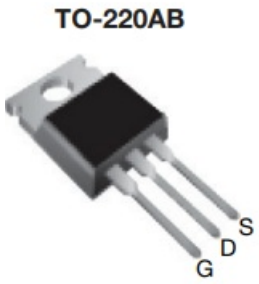

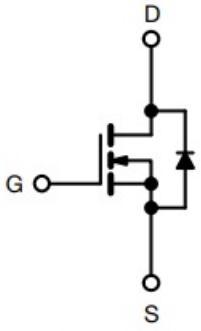

N-Channel MOSFET

ORDERING INFORMATION	
Package	TO-220AB
Lead (Pb)-free	IRF840PbF
Lead (Pb)-free and halogen-free	IRF840PbF-BE3

ABSOLUTE MAXIMUM RATINGS (T_C = 25 °C, unless otherwise noted)					
PARAMETER			**SYMBOL**	**LIMIT**	**UNIT**
Drain-source voltage			VDS	500	V
Gate-source voltage			VGS	± 20	V
Continuous drain current	V_{GS} at 10 V	T_C = 25 °C	I_D	8.0	A
		T_C = 100 °C		5.1	
Pulsed drain current a			IDM	32	
Linear derating factor				1.0	W/°C
Single pulse avalanche energy b			EAS	510	mJ
Repetitive avalanche current a			IAR	8.0	A
Repetitive avalanche energy a			EAR	13	mJ
Maximum power dissipation	T_C = 25 °C		P_D	125	W
Peak diode recovery dV/dt c			dV/dt	3.5	V/ns
Operating junction and storage temperature range			TJ, Tstg	-55 to +150	°C
Soldering recommendations (peak temperature) d	For 10 s			300	
Mounting torque	6-32 or M3 screw			10	lbf · in
				1.1	N · m

Notes

- Repetitive rating; pulse width limited by maximum junction temperature (see fig. 11)

- VDD = 50 V, starting TJ = 25 °C, L = 14 mH, Rg = 25 Ω, IAS = 8.0 A (see fig. 12)
- ISD ≤ 8.0 A, dI/dt ≤ 100 A/μs, VDD ≤ VDS, TJ ≤ 150 °C
- 1.6 mm from case

THERMAL RESISTANCE RATINGS				
PARAMETER	**SYMBOL**	**TYP.**	**MAX.**	**UNIT**
Maximum junction-to-ambient	RthJA	–	62	°C/W
Case-to-sink, flat, greased surface	RthCS	0.50	–	
Maximum junction-to-case (drain)	RthJC	–	1.0	

SPECIFICATIONS (T_J = 25 °C, unless otherwise noted)							
PARAMETER	**SYMBOL**	**TEST CONDITIONS**		**MIN.**	**TYP.**	**MAX.**	**UNIT**
Static							
Drain-source breakdown voltage	VDS	V_{GS} = 0 V, I_D = 250 μA		500	–	–	V
V_{DS} temperature coefficient	DV_{DS}/T_J	Reference to 25 °C, I_D = 1 mA		–	0.78	–	V/°C
Gate-source threshold voltage	VGS(th)	V_{DS} = V_{GS}, I_D = 250 μA		2.0	–	4.0	V
Gate-source leakage	IGSS	V_{GS} = ± 20 V		–	–	± 100	nA
Zero gate voltage drain current	IDSS	V_{DS} = 500 V, V_{GS} = 0 V		–	–	25	μA
		V_{DS} = 400 V, V_{GS} = 0 V, T_J = 125 °C		–	–	250	
Drain-source on-state resistance	RDS(on)	V_{GS} = 10 V	I_D = 4.8 A b	–	–	0.85	W
Forward transconductance	gfs	V_{DS} = 50 V, I_D = 4.8 A b		4.9	–	–	S
Dynamic							
Input capacitance	Ciss	V_{GS} = 0 V, V_{DS} = 25 V, f = 1.0 MHz, see fig. 5		–	1300	–	pF
Output capacitance	Coss			–	310	–	
Reverse transfer capacitance	Crss			–	120	–	
Total gate charge	Q_g	V_{GS} = 10 V	I_D = 8 A, V_{DS} = 400 V, see fig. 6 and 13 b	–	–	63	nC
Gate-source charge	Qgs			–	–	9.3	
Gate-drain charge	Qgd			–	–	32	
Turn-on delay time	td(on)	V_{DD} = 250 V, I_D = 8 A		–	14	–	
Rise time	t_r			–	23	–	

Turn-off delay time	td(off)	R_g = 9.1 W, R_D = 31 W, see fig. 10 b	–	49	–	ns
Fall time	t_f		–	20	–	
Internal drain inductance	L_D	Between lead,6 mm (0.25″) from package and center of die contact 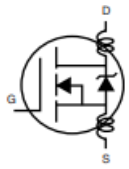	–	4.5	–	nH
Internal source inductance	L_S		–	7.5	–	
Gate input resistance	R_g	f = 1 MHz, open drain	0.6	–	2.8	W
Drain-Source Body Diode Characteristics						
Continuous source-drain diode current	I_S	MOSFET symbol showing the integral reverse p – n junction diode 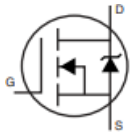	–	–	8.0	A
Pulsed diode forward current a	ISM		–	–	32	
Body diode voltage	VSD	T_J = 25 °C, I_S = 8 A, V_{GS} = 0 V b	–	–	2.0	V
Body diode reverse recovery time	trr	T_J = 25 °C, I_F = 8 A, dI/dt = 100 A/µs b	–	460	970	ns
Body diode reverse recovery charge	Qrr		–	4.2	8.9	µC
Forward turn-on time	ton	Intrinsic turn-on time is negligible (turn-on is dominated by L_S and L_D)				

Notes

- Repetitive rating; pulse width limited by maximum junction temperature (see fig. 11)
- Pulse width ≤ 300 µs; duty cycle ≤ 2 %

TYPICAL CHARACTERISTICS

(25 °C, unless otherwise noted)

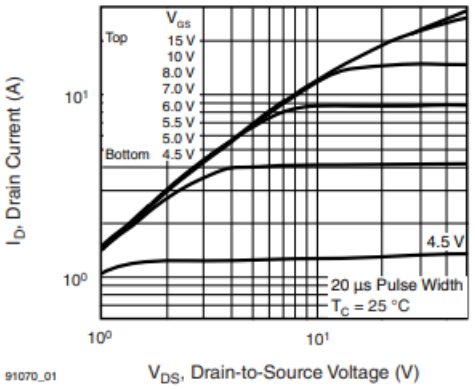

Fig. 1 - Typical Output Characteristics, T_C = 25 °C

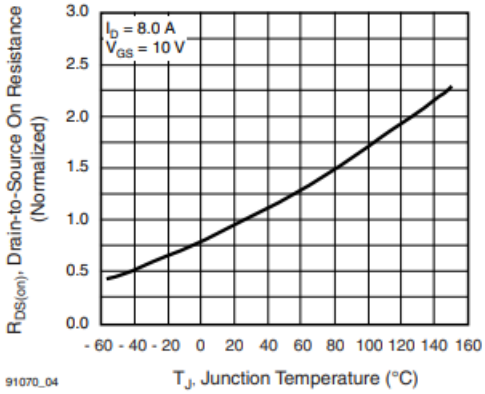

Fig. 4 - Normalized On-Resistance vs. Temperature

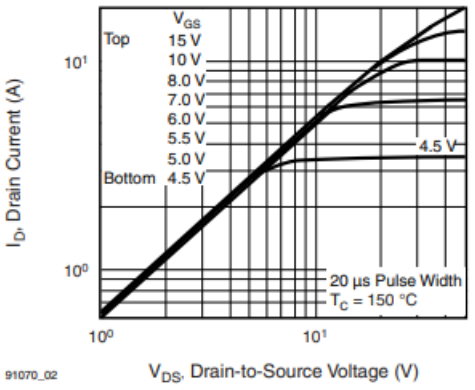

Fig. 2 - Typical Output Characteristics, T_C = 150 °C

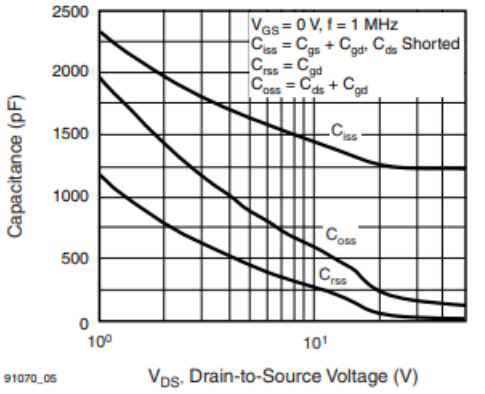

Fig. 5 - Typical Capacitance vs. Drain-to-Source Voltage

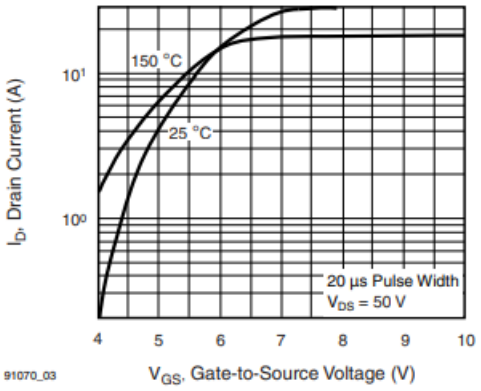

Fig. 3 - Typical Transfer Characteristics

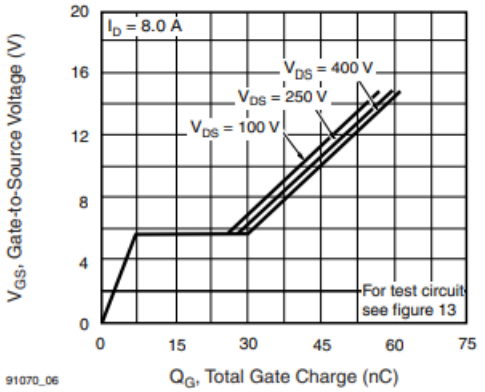

Fig. 6 - Typical Gate Charge vs. Drain-to-Source Voltage

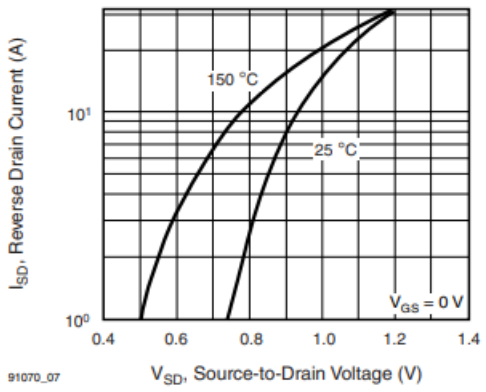

Fig. 7 - Typical Source-Drain Diode Forward Voltage

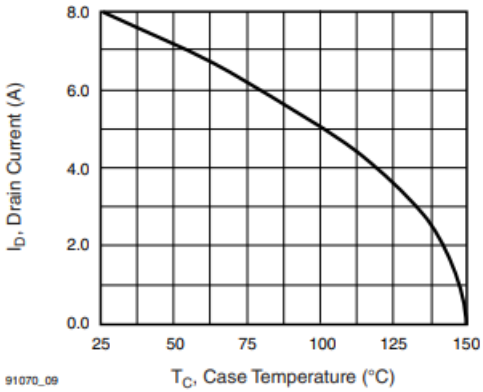

Fig. 9 - Maximum Drain Current vs. Case Temperature

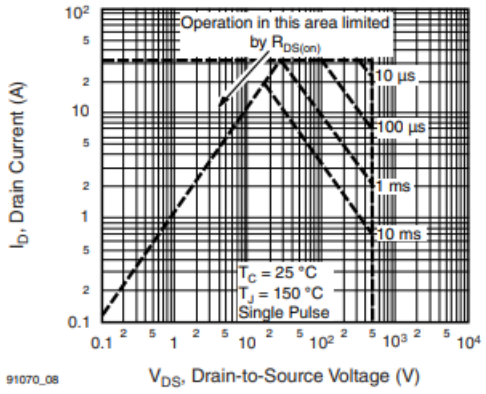

Fig. 8 - Maximum Safe Operating Area

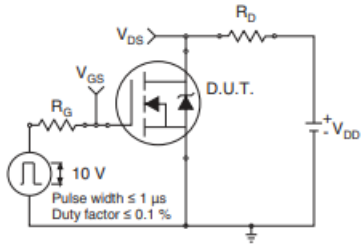

Fig. 10a - Switching Time Test Circuit

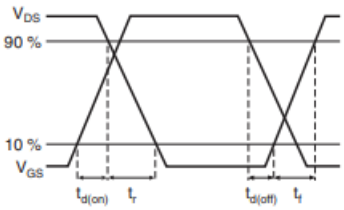

Fig. 10b - Switching Time Waveforms

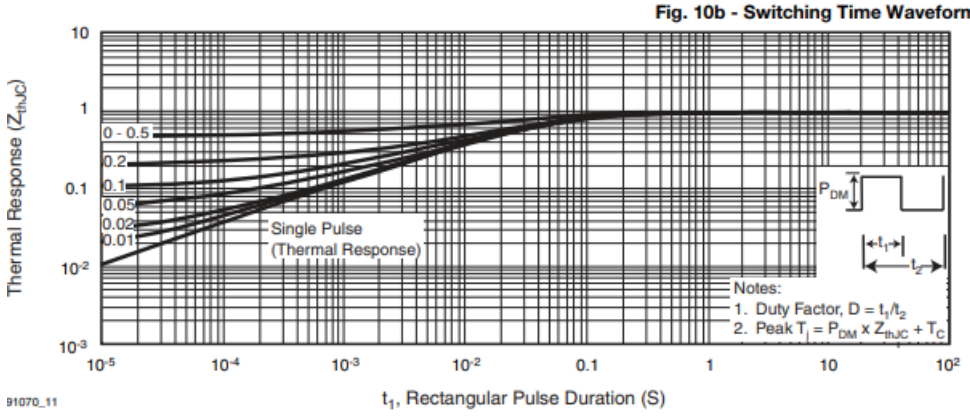

Fig. 11 - Maximum Effective Transient Thermal Impedance, Junction-to-Case

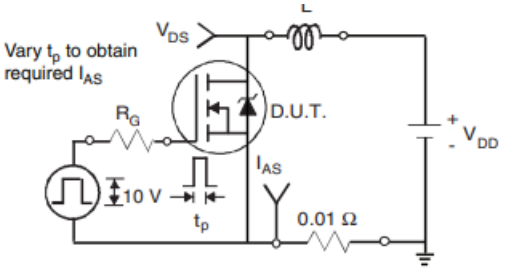

Fig. 12a - Unclamped Inductive Test Circuit

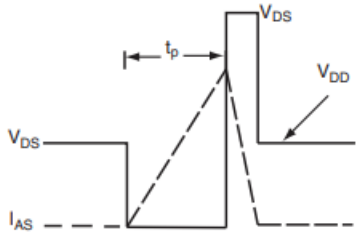

Fig. 12b - Unclamped Inductive Waveforms

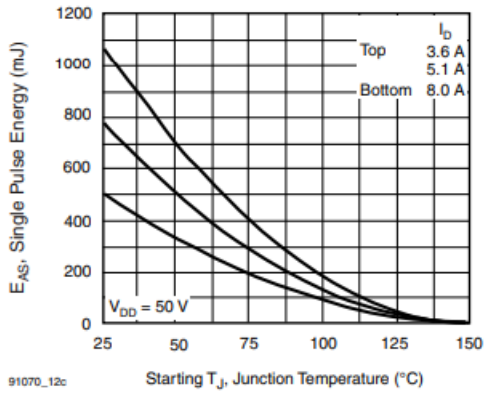

Fig. 12c - Maximum Avalanche Energy vs. Drain Current

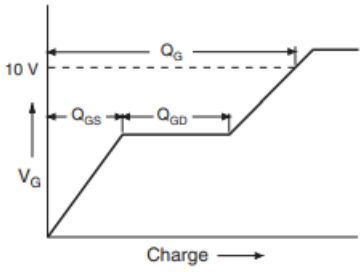

Fig. 13a - Basic Gate Charge Waveform

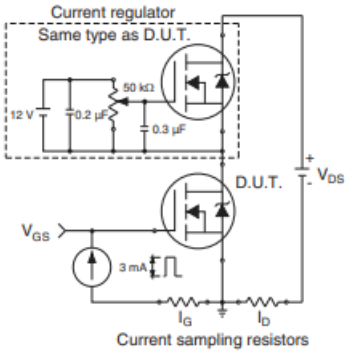

Fig. 13b - Gate Charge Test Circuit

Peak Diode Recovery dv/dt Test Circuit

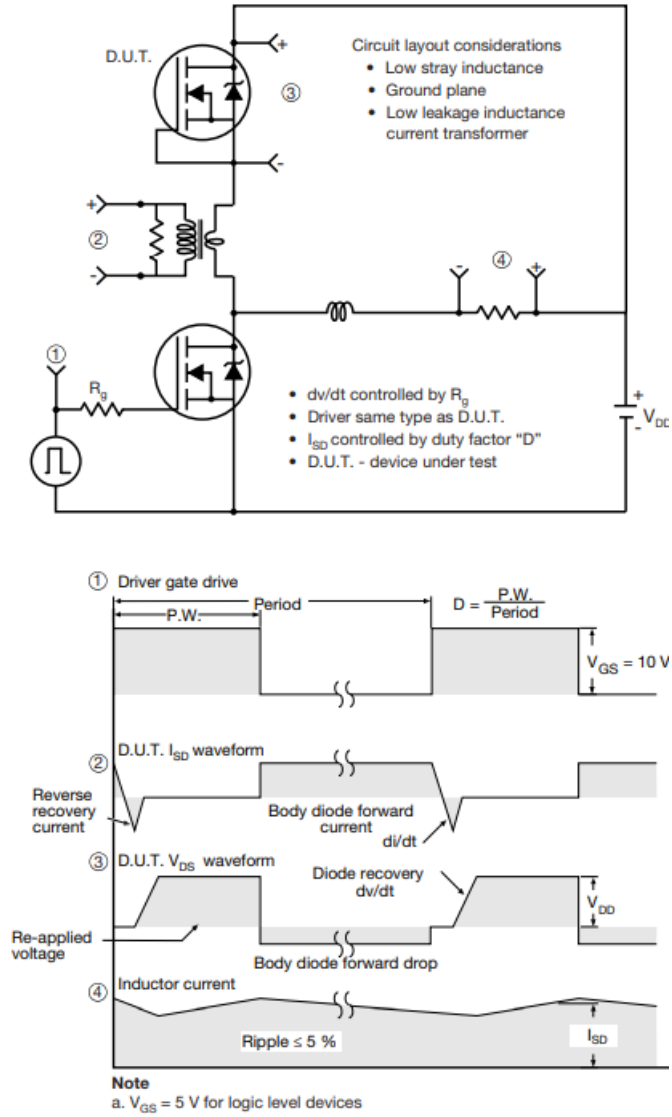

Fig. 14 - For N-Channel

TO-220-1

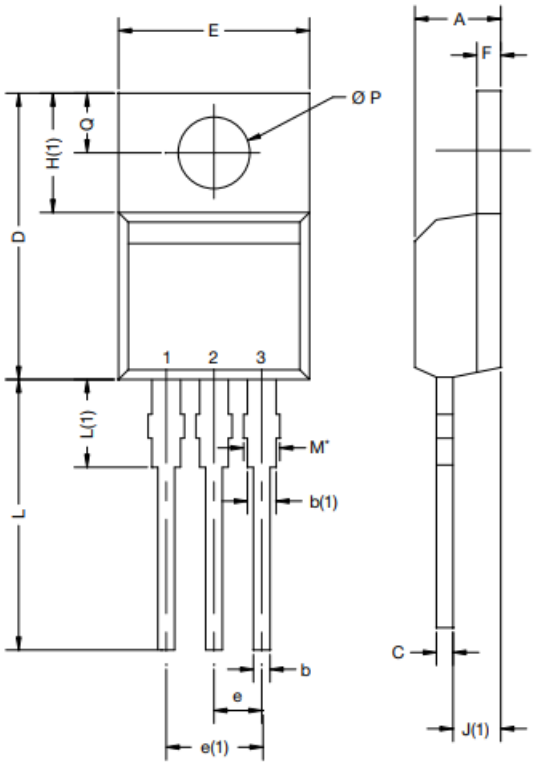

DIM.	MILLIMETERS		INCHES	
	MIN.	MAX.	MIN.	MAX.
A	4.24	4.65	0.167	0.183
b	0.69	1.02	0.027	0.040
b(1)	1.14	1.78	0.045	0.070
c	0.36	0.61	0.014	0.024
D	14.33	15.85	0.564	0.624
E	9.96	10.52	0.392	0.414
e	2.41	2.67	0.095	0.105
e(1)	4.88	5.28	0.192	0.208
F	1.14	1.40	0.045	0.055
H(1)	6.10	6.71	0.240	0.264
J(1)	2.41	2.92	0.095	0.115
L	13.36	14.40	0.526	0.567
L(1)	3.33	4.04	0.131	0.159
Ø P	3.53	3.94	0.139	0.155
Q	2.54	3.00	0.100	0.118
ECN: X15-0364-Rev. C, 14-Dec-15 DWG: 6031				

Note

- M* = 0.052 inches to 0.064 inches (dimension including protrusion), heatsink hole for HVM

Package Picture

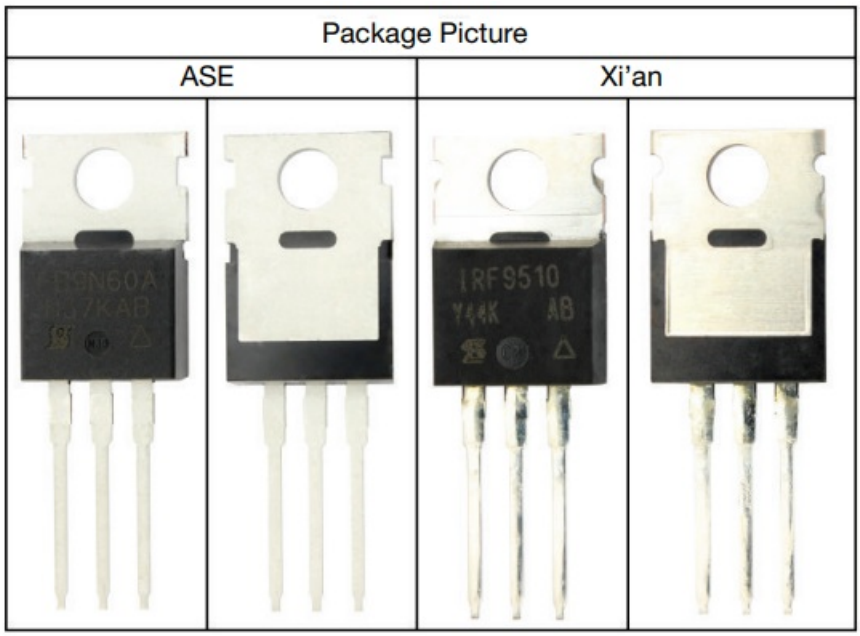

Disclaimer

- ALL PRODUCT, PRODUCT SPECIFICATIONS AND DATA ARE SUBJECT TO CHANGE WITHOUT NOTICE TO IMPROVE RELIABILITY, FUNCTION OR DESIGN OR OTHERWISE.
- Vishay Intertechnology, Inc., its affiliates, agents, and employees, and all persons acting on its or their behalf (collectively, “Vishay”), disclaim any and all liability for any errors, inaccuracies or incompleteness contained in any datasheet or in any other disclosure relating to any product.
- Vishay makes no warranty, representation or guarantee regarding the suitability of the products for any particular purpose or the continuing production of any product. To the maximum extent permitted by applicable law, Vishay disclaims (i) any and all liability arising out of the application or use of any product, (ii) any and all liability, including without limitation special, consequential or incidental damages, and (iii) any and all implied warranties, including warranties of fitness for particular purpose, non-infringement and merchantability.
- Statements regarding the suitability of products for certain types of applications are based on Vishay’s knowledge of typical requirements that are often placed on Vishay products in generic applications. Such statements are not binding statements about the suitability of products for a particular application. It is the customer’s responsibility to validate that a particular product with the properties described in the product specification is suitable for use in a particular application. Parameters provided in datasheets and / or specifications may vary in different applications and performance may vary over time. All operating parameters, including typical parameters, must be validated for each customer application by the customer’s technical experts. Product specifications do not expand or otherwise modify Vishay’s terms and conditions of purchase, including but not limite d to the warranty expressed therein.
- Hyperlinks included in this datasheet may direct users to third-party websites. These links are provided as a convenience an d for informational purposes only. Inclusion of these hyperlinks does not constitute an endorsement or an approval by Vishay o f any of the products, services or opinions of the corporation, organization or individual associated with the third-party website. Vishay disclaims any and all liability and bears no responsibility for the accuracy, legality or content of the third-party website or for that of subsequent links.

- Except as expressly indicated in writing, Vishay products are not designed for use in medical, life-saving, or life-sustainin g applications or for any other application in which the failure of the Vishay product could result in personal injury or death. Customers using or selling Vishay products not expressly indicated for use in such applications do so at their own risk. Please contact authorized Vishay personnel to obtain written terms and conditions regarding products designed for such applications.
  No license, express or implied, by estoppel or otherwise, to any intellectual property rights is granted by this document or by any conduct of Vishay. Product names and markings noted herein may be trademarks of their respective owners.
  © 2021 VISHAY INTERTECHNOLOGY, INC. ALL RIGHTS RESERVED

For technical questions, contact: **hvm@vishay.com**

THIS DOCUMENT IS SUBJECT TO CHANGE WITHOUT NOTICE. THE PRODUCTS DESCRIBED HEREIN AND THIS DOCUMENT ARE SUBJECT TO SPECIFIC DISCLAIMERS, SET FORTH AT **www.vishay.com/doc?91000**

Documents / Resources

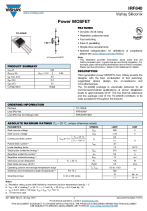	**VISHAY IRF840 Siliconix Power MOSFET** [pdf] Owner's Manual IRF840, Siliconix Power MOSFET, IRF840 Siliconix Power MOSFET, Power MOSFET, TO-220 AB

References

- **Vishay Intertechnology**
- **vishay.com/doc?91000**
- **vishay.com/doc?99912**
- **IRF840 Power MOSFET | Vishay**

Manuals+,