ROLLON®
BY TIMKEN

Linear Line



General catalog

English

www.rollon.com

We design and produce in order to support you

An international group for technology, a local support for service

Over 40 years of know how in design and production



Values



Collaboration

High level technical consulting

Cross competences in several industrial sectors for an effective problem-solving



Solutions

From a full range of standard products to fit-to-customer solutions for best perfomances

Applications

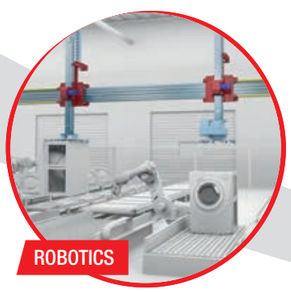

ROBOTICS

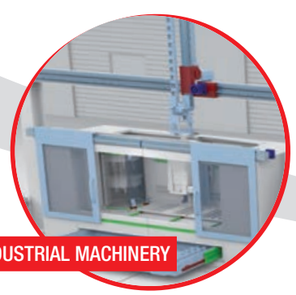

INDUSTRIAL MACHINERY



LOGISTICS



RAILWAY



AERONAUTICS



SPECIAL VEHICLES



MEDICAL



INTERIORS AND ARCHITECTURE

A complete range for linear motion which reaches every customer



Linear and curved guides with ball and roller bearings,
with hardened raceways, high load capacities, self-alignment and capable of working in dirty environments.

Linear Line



Actuator Line

Linear actuators with different guide configurations and drives,
available with belt, screw or rack and pinion drives according to different needs in terms of precision and speed. Guides with bearings or ball recirculating systems for different load capacities and critical environments.

A global provider of solutions for applications for linear motion



Telescopic Line

Telescopic guides with ball bearings,
with hardened raceways, high load capacities, and low bending, resistant to shocks and vibrations. For partial, total or extended extraction up to 200% of the length of the guide.

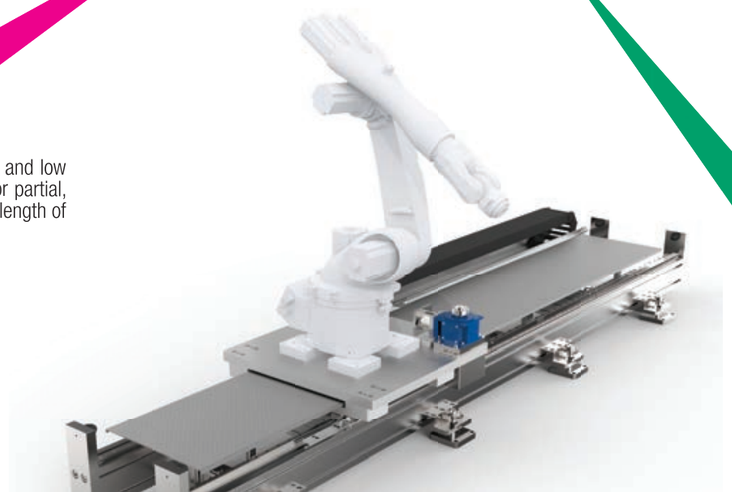



Actuator System Line

Integrated actuators for industrial automation,
they find applications in numerous industrial sectors: from machinery servo systems to high precision assembly systems, packaging lines and high speed production lines. It has evolved from Actuator Line series in order to meet the most demanding needs of our customers.

Content

Technical features overview

Compact Rail



1 Product explanation
Compact Rail is the product family of roller slider systems CR-2

2 Technical data
Performance characteristics and notes CR-5
Configurations and behavior of the slider under yawing moment M_z CR-6
Load capacities CR-8

3 Product dimensions
Rail T, U, K CR-12
Rail TR (ground custom design) CR-14
Rail length CR-15
N-version slider, normal CR-16
N-version slider, long CR-18
C-version slider CR-20
T-rail with N- / C-slider CR-24
TR-rail with N- / C-slider CR-25
U-rail with N- / C-slider CR-26
K-rail with N- / C-slider CR-27
Offset of fixing holes CR-28

4 Accessories
Rollers CR-29
Wipers for C-slider, Alignment fixture AT (for T- and U-rail), Alignment fixture AK (for K-rail) CR-30
Fixing screws CR-31
Manual clamp elements CR-32

5 Technical instructions
Linear accuracy CR-33
Rigidity CR-35
Supported sides CR-39
T+U-system tolerance compensation CR-40
K+U-system tolerance compensation CR-42
Preload CR-45
Drive force CR-48
Static load CR-50
Calculation formulas CR-51
Service life calculation CR-54
Lubrication, N-slider lubrication CR-56
C-slider lubrication, Corrosion protection, Speed and acceleration, Operating temperatures CR-57

6 Installation instructions
Fixing holes CR-58
Adjusting the sliders, Use of radial ball bearing rollers CR-59
Installing the single rail CR-60
Parallel installation of two rails CR-63
Installation of the T+U- or the K+U-system CR-65
Joined Rails CR-66
Installation of joined rails CR-68

Ordering key
Ordering key with explanations CR-69

X Rail



1 Product explanation

X-Rail: Corrosion resistant or zinc-plated steel linear bearings XR-2

2 Technical data

Performance characteristics and notes XR-4
Load capacities XR-5

3 Product dimensions

Fixed rails XR-6
Compensating rails XR-8
Mounted sliders and rails XR-10

4 Accessories

Roller Pins XR-11
Fixing screws XR-12

5 Technical instructions

Lubrication, T+U-System XR-13
Setting preload, Use of radial ball bearing rollers XR-15

Ordering key

Ordering key with explanations XR-16
Accessories XR-17

Easyslide

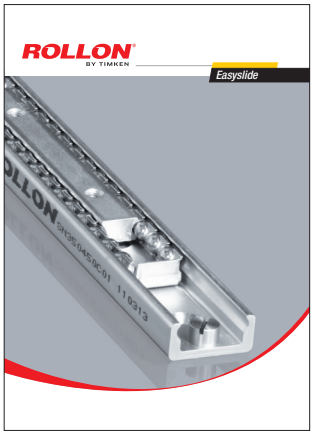

1 Product explanation

Easyslide is a linear ball rail system (with caged ball bearings for the SN series or with recirculating ball bearings for the SNK series) with single slider or multiple sliders. ES-2

2 Technical data

Performance characteristics and notes ES-4

3 Dimensions and load capacity

SN ES-5
SN ES-9
SNK ES-10
SNK ES-11

4 Technical instructions

Static load ES-12
Service life ES-14
Clearance and preload, Coefficient of friction, Linear accuracy, Speed, Temperature ES-15
Anticorrosive protection, Lubrication SN, Lubrication SNK ES-16
Fixing screws, Installation instructions ES-17
SNK Joined Rails ES-18
Instructions for use ES-19

5 Standard configurations

SN Standard configurations ES-20

Ordering key

Ordering key with explanations ES-22

Curviline



1 Product explanation

Curviline are curvilinear rails with constant and variable radii CL-3

2 Technical data

Performance characteristics and notes CL-5

3 Product dimensions

Rails with constant/variable radii with tempered raceways CL-6
Slider, Mounted sliders and rails, Load capacities CL-7
Rails with constant/variable radii in carbon steel CL-8
Slider, Mounted sliders and rails, Load capacities CL-9
Rails with constant/variable radii in stainless steel CL-10
Slider in stainless steel, Rail-slider package in stainless steel, Load capacities CL-11

4 Technical instructions

Anticorrosive protection,Lubrication CL-12
Setting the preload CL-13

Ordering key

Ordering key with explanations CL-14

Prismatic Rail



1 Product explanation

Prismatic Rail: with cylindrical or V-shaped rollers PR-2

2 Technical data

Performance characteristics and Notes PR-4

3 Product dimensions

Steel V-shaped rails, Machining: drilled guide rails with straight cut PR-5
Machining: drilled guide rails with 1 bevel and 1 slanting cut,
Machining: drilled guide rails with 2 slanting cuts PR-6
Roller slides, Tilting roller slides with 4 rollers Ø30 for V-shaped guide rails 28.6x11 PR-7
3-Roller slides Ø 40 for V-shaped guide rails 35x16
Tilting roller slides with 4 rollers Ø40 for V-shaped guide rails 35x16 PR-8
Fixed 4-roller slide Ø40 for V-shaped guide rails V 35x16 PR-9
E type roller slides (roller Ø52) and F type (roller Ø62) for V-shaped guide rails 55x25 PR-10
Type G roller slides (roller Ø52) and H type (roller Ø62) for V-shaped guide rails 55x25,
I-type roller slides (roller Ø52) and L-type (roller Ø62) for V-shaped guide rails V 55x25 PR-11
P-type roller slides (rollers Ø52) and Q-type (rollers Ø62) for V-shaped guide rails 55x25 PR-12

4 Accessories

V-shaped rollers (Guide Rails 28.6 x 11) anti-oxidized version,
V-shaped rollers [rails 35 x 16] integrale PR-13
Spare roller with stud PR-14
Assembly Studs, Type 0 assembly pins suitable for roller slide Ø30 and Ø40 PR-15
Type 7 assembly pins suitable for roller slide E-F,
Assembly pins type 8 suitable for carriage E-F PR-16
Type 9 assembly pins suitable for tilting roller slides G-H / I-L,
Type 10-11-12 assembly pins suitable for tilting roller slides P-Q PR-17
V-shaped guide rail assembly inserts PR-18

5 Technical instructions

Rollers and V-shaped guide rails 28.6x11 and 35x16,Application diagram
common to 2-roller slides, Application diagram common to 3-roller slides PR-19

Ordering key

Ordering key with explanations PR-20
Assembly of standard carriages / K version carriages PR-20

Speedy Rail



1 Introduction

The product, Features and user benefits	SR-2
Application fields	SR-3
Dimensions, Rollers and roller assemblies	SR-4
Measurement units	SR-5

2 Speedy Rail 35

"Speedy Rail 35" guide and specification	SR-6
"Speedy Rail 35" assemblies and components	SR-7
Sliding doors "Speedy Rail 35" application example	SR-9

3 Speedy Rail C 48

"Speedy Rail C 48" guide and specification	SR-10
"Speedy Rail C 48" assemblies and components	SR-11
Rollers and roller boxes for "Speedy Rail C 48" guide	SR-12
Roller boxes for "Speedy Rail C 48" guide	SR-13

4 Speedy Rail 60

"Speedy Rail Mini" guide and specification	SR-14
"Speedy Rail Mini" roller assemblies and components	SR-15
"Speedy Rail Mini" guide and components	SR-16
Dovetail clamps and fishplates	SR-17
Roller assembly and "V" rollers "Light"	SR-18
Roller assemblies and "V" rollers	SR-19

5 Speedy Rail 90

"Middle Speedy Rail" guide and specifications	SR-21
"Middle Speedy Rail" assemblies and components	SR-22
"Middle Speedy Rail" guide and components	SR-23
Dovetail clamps and fishplates	SR-24
Plastic compound shell "V" rollers	SR-25
Roller assembly with "V" shaped rollers	SR-26

6 Speedy Rail 120

"Standard Speedy Rail" guide and specifications	SR-27
"Standard Speedy Rail" assemblies and components	SR-28
"Standard Speedy Rail" guide and specifications	SR-29
Components for speedy rail SR120 guide	SR-30
Standard dovetail clamps	SR-31
Racks components for rigid mounting	SR-32
Standard fixing fishplates	SR-33
Plastic compound shell "V" rollers	SR-34
Roller assembly with "V" rollers	SR-35
Plastic compound shell rollers	SR-36
2 Rollers light full-block assembly	SR-38
Compact roller assembly with plastic compound rollers	SR-39
Full-block roller assembly	SR-40
Roller assembly with 4 rollers	SR-41
Narrow/wide base blindo beam roller assembly	SR-42
8 Rollers blindo beam roller assembly	SR-43
Light 4 rollers floating assembly for Speedy Rail guides	SR-44
Floating roller assembly with 4 rollers - short/long pivot	SR-45
5 Rollers assembly, one fixed, one self adjusting	SR-46
Floating roller assembly with 6 rollers - short/long pivot	SR-47
Floating roller assembly with 8 rollers - short/long pivot	SR-49
Assembling diagram for rigid mounted rack	SR-50
Assembling diagram for floating rack	SR-51
Standard racks	SR-52
Standard scrapers	SR-53

7 Speedy Rail 180

Wide body multi groove speedy rail guide and specifications SR-54
Roller assemblies and components SR-55
Wide body multi groove speedy rail guide and specifications SR-56
Components for wide body multi groove Speedy Rail guide SR-57
Roller assembly with "V" shaped rollers SR-58
Roller assembly with 4 rollers SR-59
8 Rollers floating assembly - complete pairing SR-60
Backing plate for floating roller assemblies SR-61
Angular mounting bracket for floating roller assemblies SR-62

8 Speedy Rail 250

Super wide body multi groove speedy rail guide and specifications SR-63
Roller assemblies and components SR-64
Superwide body multi groove speedy rail guide and specifications SR-65
Components for super wide body speedy rail guide SR-66
Roller assembly with "V" shaped rollers SR-67

9 Technical detail

Mechanical and technological components specifications SR-68
Treatments on all light alloy components, Rollers, Roller assemblies SR-69
Rollers adjustments, Torque settings, Scrapers, Drive head SR-70
Lubrication, Life testing SR-71
Summary table Speedy Rail guides SR-72
Loads on a 4 'V' rollers trolley SR-73
Loads on twin 4 'V' rollers trolleys SR-77
Loads on a 4 'V' rollers vertical trolley SR-78
Cilindrical roller loads SR-79
User suggestions SR-81

10 Applications SR-84
11 Generail index SR-89

Guides suitable for all applications
Data sheet

Technical features overview

Reference		Section	Shape of rail	Hardened raceways	Self-alignment	Slider		Anticorrosion	Size	Max. load capacity per slider [N]		Dynamic coefficient [N] C 100	Max. moment capacity [Nm]			Max. rail length	Max. speed*	Max. acceleration	Operating temperature	
Product Family	Product					Balls	Rollers			C_0 rad	C_0 ax		M_x	M_y	M_z	[mm]	[m/s]	[m/s²]		
Compact Rail 	TLC KLC ULC			√	+++			 ****	18-28-35 -43-63	15000	10000	36600	350	689	1830	4080*²	9	20	-20°C/+120°C	CR
X-Rail 	TEX TES UEX UES				+++			 *Available in stainless steel*	20-26-30-40-45	1740	935	****				4000	1.5	2	-20°C/+100°C TEX-UEX -20°C/+120°C TES-UES	XR
Easyslide 	SN			√	++			 ****	22-28-35 -43-63	122000	85400	122000	1120,7	8682	12403	1970	0,8		-20°C/+130°C	ES
	SNK			√	+			 ****	43	10858	7600	10858	105	182	261	2000*²	1,5		-20°C/+70°C	
Curviline 	CKR CVR CKRH CVRH CKRX CVRX			√	+			 **** *Available in stainless steel*	16,5-23	2475	1459	****				3240	1,5	2	-20°C/+80°C	CL
Prismatic Rail 	P			√	+++				28-35-55	15000	15000	-	-	-	-	7500*²	7	20	-10°C/+80°C	PR
Speedy Rail 	SR35			√	++				35	400	400	-	-	-	-	6500*²	8	8	- 30° C / + 80° C	SR
	SRC48			√	+				48	540	400	-	-	-	-	7500*²	8	8	- 30° C / + 80° C	
	SR			√	+++				60-90-120- 180-250	14482	14482		-	-	-	7500*²	15	10	- 30° C / + 80° C	

Reported data must be verified according to the application.

*1 The maximum value is defined by the application.

*2 A longer stroke is available for jointed versions.

*** C50

****For more information, please contact our technical department.

ROLLON®
BY TIMKEN

Compact Rail



Product explanation

Compact Rail is the product family of roller slider systems

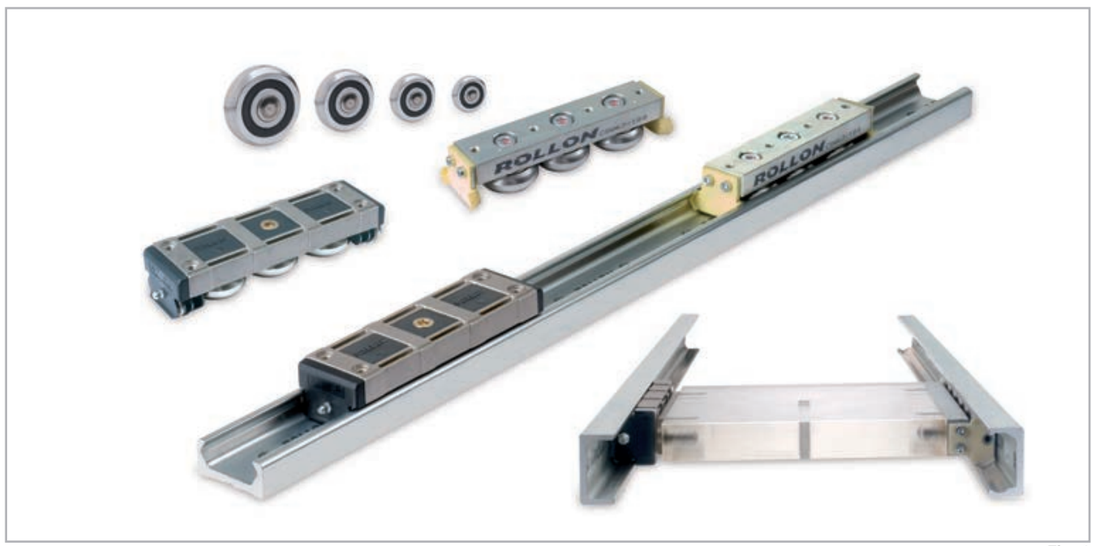

Fig. 1

Compact Rail is the product family of guide rails consisting of roller sliders with radial bearings which slide on the internal, induction hardened and ground raceways of a C-profile made from cold-drawn roller bearing carbon steel.

Compact Rail consists of three product series: the fixed bearing rail, the compensating bearing rail and the floating bearing rail. All products are available in zinc plating, with nickel plating also available as an option. There are five different sizes of guide rails and many different versions and lengths of the slide bearings.

The most important characteristics:

- Compact size
- Corrosion resistant surface
- Not sensitive to dirt due to internal tracks
- Hardened and ground raceways
- Custom design TR-rail, also ground on the back of the rail and one side surface
- Self-aligning in two planes
- Quieter than recirculating ball systems
- High operating speeds
- Wide temperature range
- Easy adjustment of slider in the guide rail
- Zinc plated surface, on request chemically nickel plated

Preferred areas of application:

- Cutting machines
- Medical technology
- Packaging machines
- Photographic lighting equipment
- Construction and machine technology (doors, protective covers)
- Robots and manipulators
- Automation
- Handling

Fixed bearing rails (T-rails)

Fixed bearing rails are used as the main load bearing in radial and axial forces.

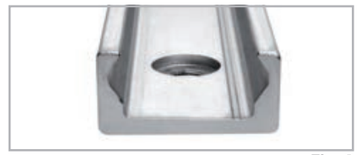

Fig. 2

Fixed bearing rails (TR-rails)

The TR rail is available as a custom design. The TR rail is ground on the back of the rail and one side surface to allow for a precision mounting onto a surface.

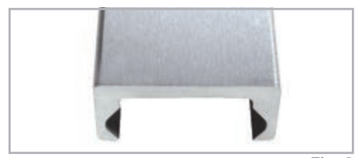

Fig. 3

Floating bearing rails (U-rails)

The floating bearing rails are used for load bearing of radial forces and, in combination with the fixed bearing T-rail or compensation K-rail, as a support bearing for occurring moment loads.

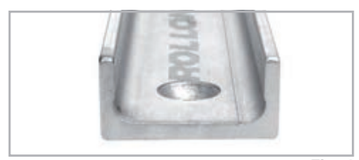

Fig. 4

Compensation bearing rails (K-rails)

The compensation bearing rails are used for the load bearing of radial and axial forces. Tolerance compensation in two planes can be implemented in combination with the U-rail.

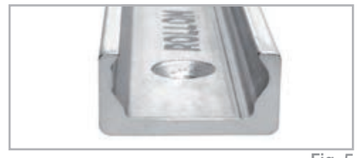

Fig. 5

System (T+U-system)

The combination of fixed bearing rail and floating bearing rail allows for deviations in parallelism.



Fig. 6

System (K+U-system)

The combination of compensation rail and floating bearing rail allows for deviations in parallelism and height offset.



Fig. 7

N-slider

Constructed from a, chemically nickel plated aluminum die cast body that is available for sizes 18, 28, 43 and 63. Spring preloaded wipers and a self-lubrication kit are integrated in the end caps (except for size 18, see pg. 58). Configurable with three rollers as standard, in sizes 28 and 43. A longer carriage with up to five rollers is also available.



Fig. 8

CS-slider

Constructed with zinc-plated steel body and sturdy wipers (optional) made of polyamide. Available for all sizes. Depending on the load requirement, slider is configurable with up to six rollers.



Fig. 9

CD-slider

Constructed with asymmetrical zinc-plated steel body and sturdy wipers (optional) made of polyamide. With this design it is possible to mount your moving element to the bottom or top of the slider body. The Slider is available for sizes 28, 35 and 43. Available with three or five rollers, depending on load case and load direction set with the corresponding configuration.



Fig. 10

Rollers

Also available individually in all sizes. Available as eccentric or concentric rollers. Optionally available with splash-proof plastic seal (2RS) or with steel cover disc (2Z).



Fig. 11

Wipers

Wipers are available for slider types CS and CD and are made of sturdy polyamide. They keep the raceways free of contamination and thus ensure a longer service life.

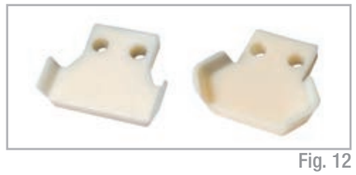

Fig. 12

Alignment fixture

The alignment fixture AT / AK is used during installation of joined rails for precise alignment of the rail transition from one to another.



Fig. 13

Technical data

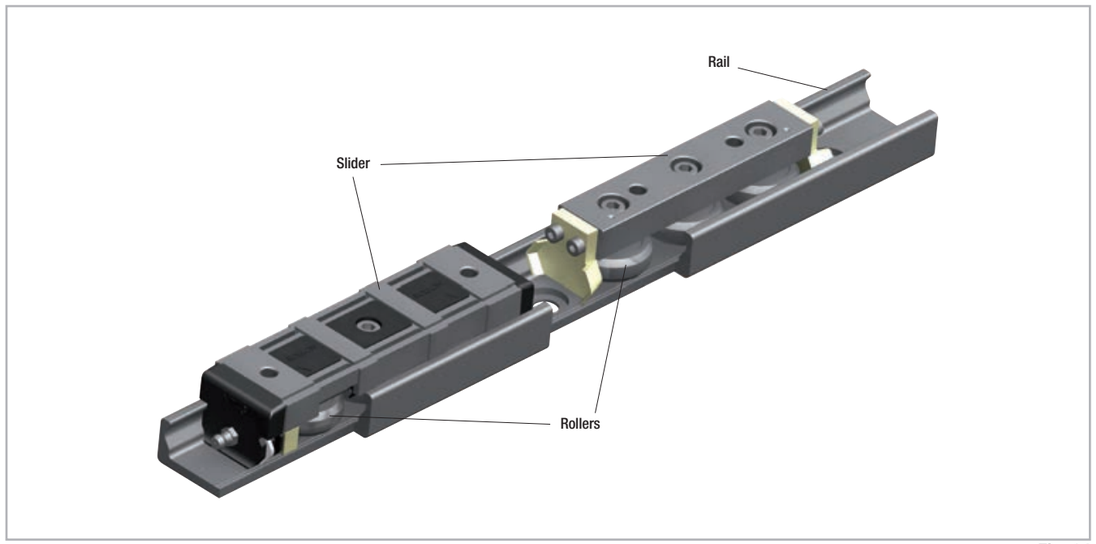

Fig. 14

Performance characteristics:

- Available sizes for T-rail, TR-rail, U-rail: 18, 28, 35, 43, 63
- Available sizes for K-rail: 43, 63
- Max. operating speed: 9 m/s (354 in/s) (depending on application)
- Max. acceleration: 20 m/s^2 (787 in/s^2) (depending on application)
- Max. radial load capacity: 15,000 N (per slider)
- Temperature range: -20 °C to +120 °C (-4 °F to +248 °F) briefly up to max. +170 °C (+338 °F)
- Available rail lengths from 160 mm to 3,600 mm (6.3 in to 142 in) in 80-mm increments (3.15 in), longer single rails up to max. 4,080 mm (160.6 in) on request
- Roller pins lubricated for life
- Roller seal/shield: 2RS (splash-proof), 2Z (steel cover disk)
- Roller material: steel 100Cr6
- Rail raceways are induction hardened and ground
- Rails and slider bodies are standard zinc-plated according to ISO 2081
- Rail material of T- and U-rails in sizes 18: cold-drawn roller bearing carbon steel C43 F
- Rail material of K-rails, as well as T- and U-rails in size 28 to 63: CF53

Notes:

- The sliders are equipped with rollers that are in alternating contact with both sides of the raceway. Markings on the body around the roller pins indicate correct arrangement of the rollers to the external load
- With a simple adjustment of the eccentric rollers, the desired clearance or preload on the rail and slider can be set.
- Rails in joined design are available for longer transverse distances (see pg. CR-64)
- The K rails are not suitable for vertical installation
- Screws of property class 10.9 must be used
- Differences in screw sizes must be observed
- When mounting the rails, it is crucial to ensure that the mounting holes in the structure are properly chamfered. (see pg. CR-58, tab. 41)
- The general illustrations show N-sliders as an example
- The sliders of the CS and CD series are delivered as standard without wipers. Wipers must be ordered separately if required (see CR-30, Fig. 43 and order code CR-70 - Scrapers)

Configurations and behavior of the slider under yawing moment M_z

Individual slider under M_z moment load

When an overhanging load in an application with a single slider per rail causes an M_z moment in one direction, a 4 to 6 roller Compact Rail slider is available. These sliders are available in both configuration A and B in regards to the roller arrangement to counter the acting M_z moment load. The moment capacity of these sliders in the Mz-direction varies significantly through spacing L_1 and L_2 in accordance with the direction of rotation of M_z. Especially in the use of two parallel rails, for example with a T+U-system, it is extremely important to pay attention to the correct combination of the slider configuration A and B, in order to use the maximum load capacities of the slider.

The diagrams below illustrate this concept of the A and B configuration for sliders with 4 and 6 rollers. The maximum allowable M_z-moment is identical in both directions for all 3 and 5 roller sliders.

Slider with 4 rollers
Configuration A

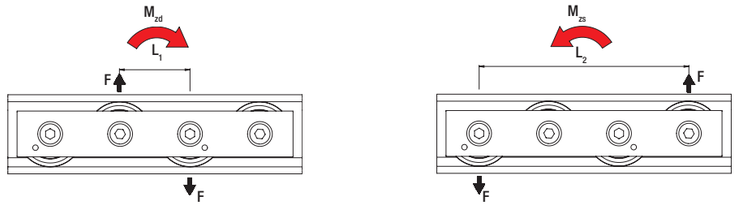

Fig. 15

Slider with 4 rollers
Configuration B

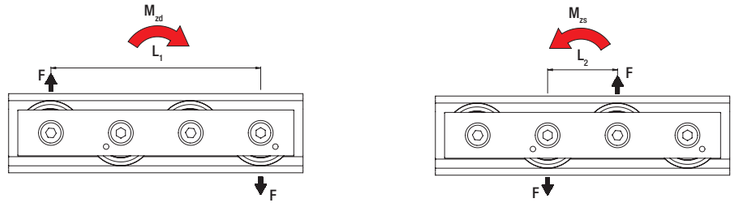

Fig. 16

Two sliders under M_z moment load

When an overhanging load acts on an application with two sliders per rail and causes an M_z-moment in one direction, there are differing support reactions with the two sliders. For this reason, an optimal arrangement of different slider configurations to reach the maximum load capacities must be achieved for this type of application. In practice this means, when using NTE-, NUE- or CS-sliders with 3 or 5 rollers, both sliders are installed rotated by 180° so that the slider is always loaded on the side with the most rollers (with NKE-sliders this is not possible due to the different raceway geometry). For an even number of rollers this has no effect. The CD-slider with installation option from above or below cannot be installed due to the position of the rollers in reference to the installation side therefore they are available in the configurations A and B (see fig. 18).

CS-slider under load moment M_z

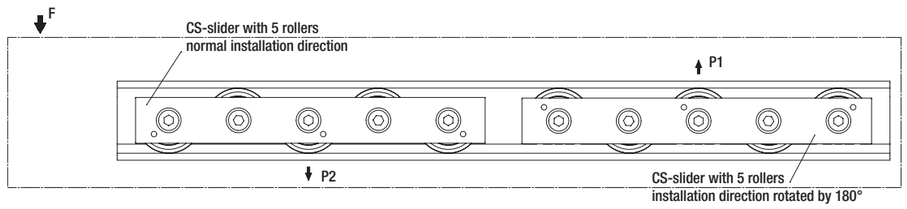

Fig. 17

CD-slider under load moment M_z

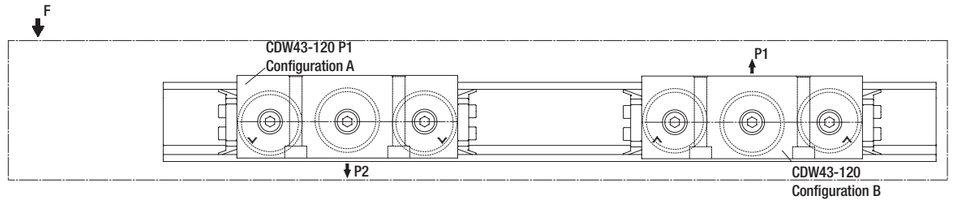

Fig. 18

Slider configurations for various load cases

Arrangement DS

This is the recommended arrangement for use of two sliders under M_z-moment when using one rail. Also see previous page: Two sliders under M_z moment load.

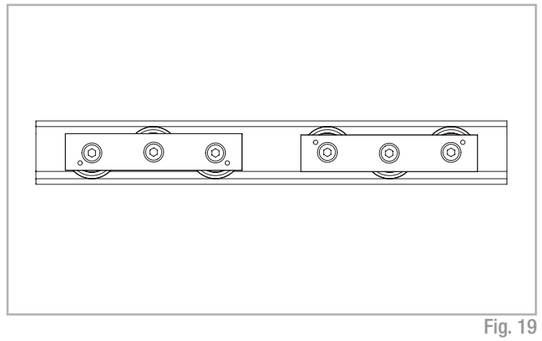

Fig. 19

Arrangement DD

For using a pair of guide rails with two sliders each under M_z moment load, the second system should be designed in arrangement DD. This results in the following combination: One guide rail with two sliders in arrangement DS and the other guide rail with 2 sliders in arrangement DD. This allows even load and moment distribution between the two parallel rails.

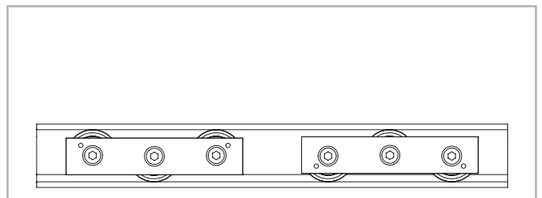

Fig. 20

Arrangement DA

Standard arrangement if no other information is given. This arrangement is recommended if the load point is located within the two outside points of the sliders.

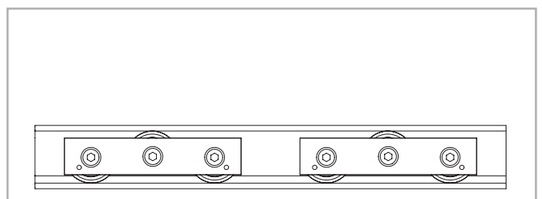

Fig. 21

Load capacities

Slider

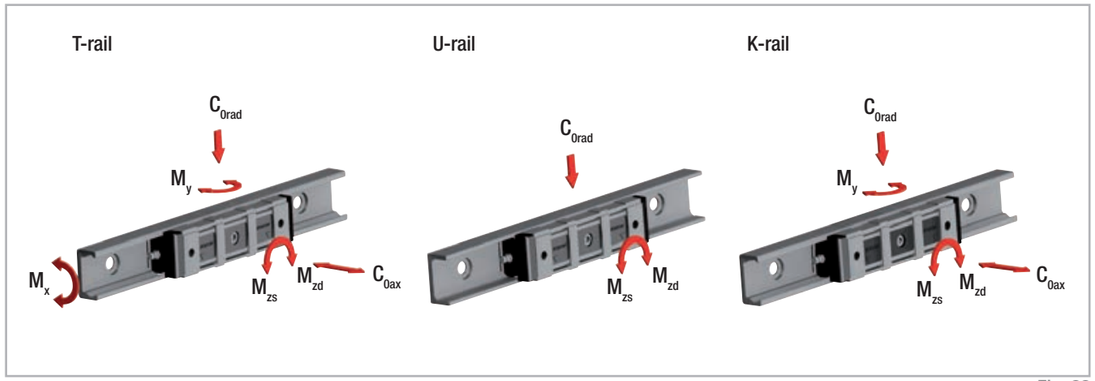

Fig. 22

The load capacities in the following tables each apply for one slider.

When using the slider in U-rails (floating bearing rails) the values are C_{0ax} = 0, M_x = 0 and M_y = 0. When using the sliders in K-rails (compensation rails) the value is: M_x = 0.

Type	Number of rollers	Load capacities and moments							Weight
		C [N]	C_{0rad} [N]	C_{0ax} [N]	M_x [Nm]	M_y [Nm]	M_z [Nm]		
							M_{zd}	M_{zs}	[kg]
NT18	3	1530	820	260	1.5	4.7	8.2	8.2	0.03
NU18	3	1530	820	0	0	0	8.2	8.2	0.03
CS18-060-...	3	1530	820	260	1.5	4.7	8.2	8.2	0.04
CS18-080-...-A	4	1530	820	300	2.8	7	8.2	24.7	0.05
CS18-080-...-B	4	1530	820	300	2.8	7	24.7	8.2	0.05
CS18-100-...	5	1830	975	360	2.8	9.4	24.7	24.7	0.06
CS18-120-...-A	6	1830	975	440	3.3	11.8	24.7	41.1	0.07
CS18-120-...-B	6	1830	975	440	3.3	11.8	41.1	24.7	0.07

Tab. 1

Type	Number of rollers	Load capacities and moments							Weight
		C [N]	C_{0rad} [N]	C_{0ax} [N]	M_x [Nm]	M_y [Nm]	M_z [Nm]		
							M_{zd}	M_{zs}	[kg]
NTE28	3	4260	2170	640	6.2	16	27.2	27.2	0.115
NUE28	3	4260	2170	0	0	0	27.2	27.2	0.115
NTE28L-3-A	3	4260	2170	640	6.2	29	54.4	54.4	0.141
NTE28L-4-A	4	4260	2170	750	11.5	29	54.4	108.5	0.164
NTE28L-4-B	4	4260	2170	750	11.5	29	108.5	54.4	0.164
NTE28L-4-C	4	4260	2170	750	11.5	29	81.7	81.7	0.164
NTE28L-5-A	5	5065	2580	900	11.5	29	81.7	81.7	0.185
NTE28L-5-B	5	6816	3472	640	6.2	29	54.4	54.4	0.185
NUE28L-3-A	3	4260	2170	0	0	0	54.4	54.4	0.141
NUE28L-4-A	4	4260	2170	0	0	0	54.4	108.5	0.164
NUE28L-4-B	4	4260	2170	0	0	0	108.5	54.4	0.164
NUE28L-4-C	4	4260	2170	0	0	0	81.7	81.7	0.164
NUE28L-5-A	5	5065	2580	0	0	0	81.7	81.7	0.185
NUE28L-5-B	5	6816	3472	0	0	0	54.4	54.4	0.185
CS28-080-...	3	4260	2170	640	6.2	16	27.2	27.2	0.155
CS28-100-...-A	4	4260	2170	750	11.5	21.7	27.2	81.7	0.195
CS28-100-...-B	4	4260	2170	750	11.5	21.7	81.7	27.2	0.195
CS28-125-...	5	5065	2580	900	11.5	29	81.7	81.7	0.24
CS28-150-...-A	6	5065	2580	1070	13.7	36.2	81.7	136.1	0.29
CS28-150-...-B	6	5065	2580	1070	13.7	36.2	136.1	81.7	0.29
CD28-080-...	3	4260	2170	640	6.2	16	27.2	27.2	0.215
CD28-125-...	5	5065	2580	900	11.5	29	81.7	81.7	0.3
CS35-100-...	3	8040	3510	1060	12.9	33.7	61.5	61.5	0.27
CS35-120-...-A	4	8040	3510	1220	23.9	43.3	52.7	158.1	0.33
CS35-120-...-B	4	8040	3510	1220	23.9	43.3	158.1	52.7	0.33
CS35-150-...	5	9565	4180	1460	23.9	57.7	158.1	158.1	0.41
CS35-180-...-A	6	9565	4180	1780	28.5	72.2	158.1	263.4	0.49
CS35-180-...-B	6	9565	4180	1780	28.5	72.2	263.4	158.1	0.49
CD35-100-...	3	8040	3510	1060	12.9	33.7	61.5	61.5	0.39
CD35-150-...	5	9565	4180	1460	23.9	57.7	158.1	158.1	0.58

Tab. 2

Type	Number of rollers	Load capacities and moments							Weight
		C [N]	C_{0rad} [N]	C_{0ax} [N]	M_x [Nm]	M_y [Nm]	M_z [Nm]		[kg]
							M_{zd}	M_{zs}	
NTE43	3	12280	5500	1570	23.6	60	104.5	104.5	0.385
NUE43	3	12280	5500	0	0	0	104.5	104.5	0.385
NKE43	3	12280	5100	1320	0	50.4	96.9	96.9	0.385
NTE43L-3-A	3	12280	5500	1570	23.6	108.6	209	209	0.45
NTE43L-4-A	4	12280	5500	1855	43.6	108.6	209	418	0.52
NTE43L-4-B	4	12280	5500	1855	43.6	108.6	418	209	0.52
NTE43L-4-C	4	12280	5500	1855	43.6	108.6	313.5	313.5	0.52
NTE43L-5-A	5	14675	6540	2215	43.6	108.6	313.5	313.5	0.59
NTE43L-5-B	5	19650	8800	1570	23.6	108.6	209	209	0.59
NUE43L-3-A	3	12280	5500	0	0	0	209	209	0.45
NUE43L-4-A	4	12280	5500	0	0	0	209	418	0.52
NUE43L-4-B	4	12280	5500	0	0	0	418	209	0.52
NUE43L-4-C	4	12280	5500	0	0	0	313.5	313.5	0.52
NUE43L-5-A	5	14675	6540	0	0	0	313.5	313.5	0,59
NUE43L-5-B	5	19650	8800	0	0	0	209	209	0.59
NKE43L-3-A	3	12280	5100	1320	0	97.7	188.7	188.7	0.45
NKE43L-4-A	4	12280	5100	1320	0	97.7	188.7	377.3	0.52
NKE43L-4-B	4	12280	5100	1320	0	97.7	377.3	188.7	0.52
NKE43L-4-C	4	12280	5100	1320	0	97.7	283	283	0.52
NKE43L-5-A	5	14675	6065	1570	0	97.7	283	283	0.59
NKE43L-5-B	5	19650	8160	1820	0	97.7	188.7	188.7	0.59
CS43-120-...	3	12280	5500	1570	23.6	60	104.5	104.5	0.53
CS43-150-...-A	4	12280	5500	1855	43.6	81.5	104.5	313.5	0.68
CS43-150-...-B	4	12280	5500	1855	43.6	81.5	313.5	104.5	0.68
CS43-190-...	5	14675	6540	2215	43.6	108.6	313.5	313.5	0.84
CS43-230-...-A	6	14675	6540	2645	52	135.8	313.5	522.5	1.01
CS43-230-...-B	6	14675	6540	2645	52	135.8	522.5	313.5	1.01

Tab. 3

Type	Number of rollers	Load capacities and moments							Weight
		C [N]	C_{0rad} [N]	C_{0ax} [N]	M_x [Nm]	M_y [Nm]	M_z [Nm]		[kg]
							M_{zd}	M_{zs}	
CSK43-120-...	3	12280	5100	1320	0	50.4	96.9	96.9	0.53
CSK43-150-A	4	12280	5100	1320	0	54.3	96.9	290.7	0.68
CSK43-150-B	4	12280	5100	1320	0	54.3	290.7	96.9	0.68
CSK43-190-...	5	14675	6065	1570	0	108.7	290.7	290.7	0.84
CSK43-230-A	6	14675	6065	1570	0	108.7	290.7	484.5	1.01
CSK43-230-B	6	14675	6065	1570	0	108.7	484.5	290.7	1.01
CD43-120-...	3	12280	5500	1570	23.6	60	104.5	104.5	0.64
CD43-190-...	5	14675	6540	2215	43.6	108.6	313.5	313.5	0.95
CDK43-120-...	3	12280	5100	1320	0	50.4	96.9	96.9	0.64
CDK43-190-...	5	14675	6065	1570	0	108.7	290.7	290.7	0.95
NTE63	3	30750	12500	6000	125	271	367	367	1.07
NUE63	3	30750	12500	0	0	0	367	367	1.07
NKE63	3	30750	11550	5045	0	235	335	335	1.07
CS63-180-2ZR	3	30750	12500	6000	125	271	367	367	1.66
CS63-235-2ZR-A	4	30750	12500	7200	250	413	367	1100	2.17
CS63-235-2ZR-B	4	30750	12500	7200	250	413	1100	367	2.17
CS63-290-2ZR	5	36600	15000	8500	250	511	1100	1100	2.67
CS63-345-2ZR-A	6	36600	15000	10000	350	689	1100	1830	3.17
CS63-345-2ZR-B	6	36600	15000	10000	350	689	1830	1100	3.17
CSK63-180-2ZR	3	30750	11550	5045	0	235	335	335	1.66
CSK63-235-2ZR-A	4	30750	11550	5045	0	294	335	935	2.17
CSK63-235-2ZR-B	4	30750	11550	5045	0	294	935	335	2.17
CSK63-290-2ZR	5	36600	13745	6000	0	589	935	935	2.67
CSK63-345-2ZR-A	6	36600	13745	6000	0	589	935	1560	3.17
CSK63-345-2ZR-B	6	36600	13745	6000	0	589	1560	935	3.17

Tab. 4

Product dimensions

Rail T, U, K

Size 18 - 43

T-rail

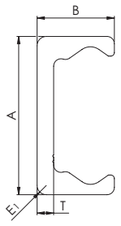

U-rail

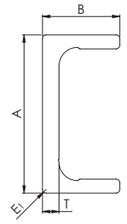

K-rail (Size 43)

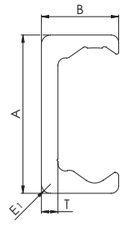

Fig. 23

Size 63

T-rail

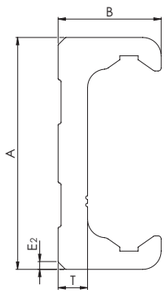

U-rail

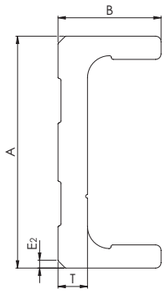

K-rail

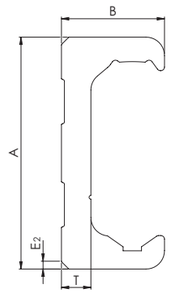

Fig. 24

Holes

Rail with C-hole

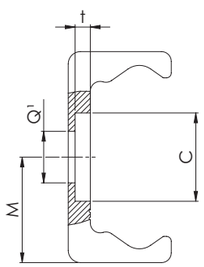

Rail with V-hole

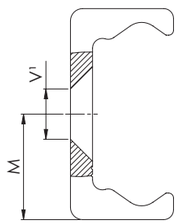

Fig. 25

Q¹ Fixing holes for Torx® screws with low head (custom design) included in scope of supply

V¹ Fixing holes for countersunk head screws according to DIN 7991

Type	Size	A [mm]	B [mm]	M [mm]	E_1 [mm]	T [mm]	C [mm]	Weight [kg/m]	E_2 [°]	t [mm]	Q¹ [mm]	V¹ [mm]
TLC TLV	18	18	8.25	9	1.5	2.8	9.5	0.55	-	2	M4	M4
	28	28	12.25	14	1	3	11	1.0	-	2	M5	M5
	35	35	16	17.5	2	3.5	14.5	1.65	-	2.7	M6	M6
	43	43	21	21.5	2.5	4.5	18	2.6	-	3.1	M8	M8
	63	63	28	31.5	-	8	15	6.0	2x45	5.2	M8	M10
ULC ULV	18	18	8.25	9	1	2.6	9,5	0.55	-	1.9	M4	M4
	28	28	12	14	1	3	11	1.0	-	2	M5	M5
	35	35	16	17.5	1	3.5	14.5	1.65	-	2.7	M6	M6
	43	43	21	21.5	1	4.5	18	2.6	-	3.1	M8	M8
	63	63	28	31.5	-	8	15	6.0	2x45	5.2	M8	M10
KLC KLV	43	43	21	21.5	2.5	4.5	18	2.6	-	3.1	M8	M8
	63	63	28	31.5	-	8	15	6.0	2x45	5.2	M8	M10

Tab. 5

Rail TR (ground custom design)

Size 18 - 43
T-rail

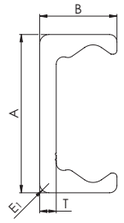

Size 63
T-rail

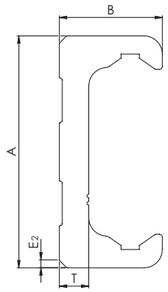

Fixing Hole

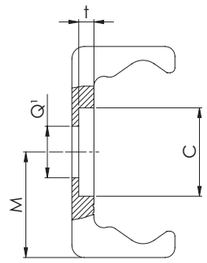

Q¹ Fixing holes for Torx® screws with low head (custom design) included in scope of supply

Fig. 26

Type	Size	A [mm]	B [mm]	M [mm]	E_1 [mm]	T [mm]	C [mm]	Weight [kg/m]	E_2 [°]	t [mm]	Q¹ [mm]
TRC	18	17.95	8	8.95	1.5	2.8	9.5	0.55	-	2	M4
	28	27.83	12.15	13.83	1	2.9	11	1.0	-	2	M5
	35	34.8	15.9	17.3	2	3.4	14.5	1.6	-	2.7	M6
	43	42.75	20.9	21.25	2.5	4.4	18	2.6	-	3.1	M8
	63	62.8	27.9	31.3	-	7.9	15	6.0	2x45	5.2	M8

Tab. 6

Rail length

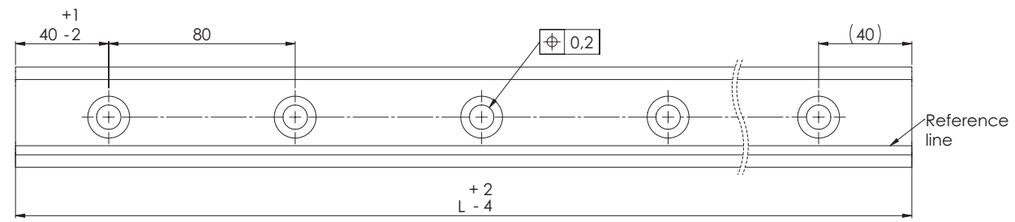

Fig. 27

Type	Size	Min length [mm]	Max length [mm]	Available standard lengths L [mm]
TLC TLV ULC ULV	18	160	2000	160 - 240 - 320 - 400 - 480 - 560 - 640 - 720 - 800 - 880 - 960 - 1040 - 1120 - 1200 - 1280 - 1360 - 1440 - 1520 - 1600 - 1680 - 1760 - 1840 - 1920 - 2000 - 2080 - 2160 - 2240 - 2320 - 2400 - 2480 - 2560 - 2640 - 2720 - 2800 - 2880 - 2960 - 3040 - 3120 - 3200 - 3280 - 3360 - 3440 - 3520 - 3600
	28	240	3200	
	35	320	3600	
	43	400	3600	
	63	560	3600	
KLC KLV	43	400	3600	
	63	560	3600	
TRC	18	160	2000	
	28	240	2000	
	35	320	2000	
	43	400	2000	
	63	560	2000	

Longer single rails up to max. 4,080 mm on request
Longer rail systems see pg. CR-66 Joined rails

Tab. 7

N-version slider, normal

N-series

Size 18

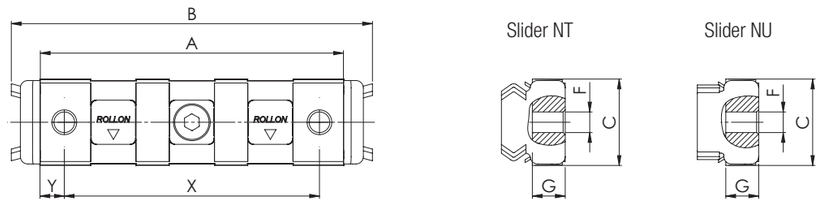

Fig. 28

Sizes 28 and 43 (not available in size 35)

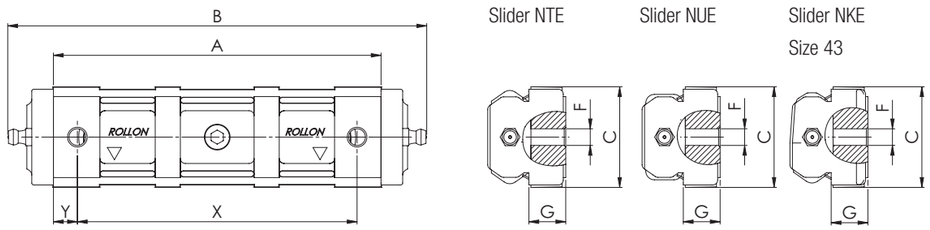

Fig. 29

Size 63

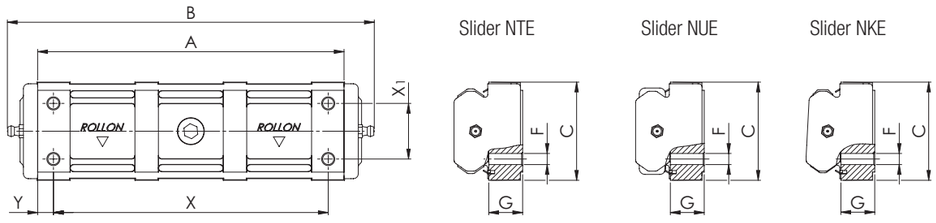

Fig. 30

Type	Size	A [mm]	B [mm]	C [mm]	G [mm]	F [mm]	X [mm]	Y [mm]	X_1 [mm]	No. of holes	Roller type used*	Number of Rollers
NT NU	18	62	74	17.6	6.4	M5	52	5	-	2	CPA18-CPN18	3
NTE NUE	28	88	124	26,5	9.3	M5	78	5	-	2	CPA28-CPN28	3
NTE NUE	43	134	170	40	13.7	M8	114	10	-	2	CPA43-CPN43	3
NKE	43	134	170	40	13.7	M8	114	10	-	2	CRA43-CRN43	3
NTE NUE	63	188	225	60	20.2	M8	168	10	34	4	CPA63-CPN63	3
NKE	63	188	225	60	20.2	M8	168	10	34	4	CRA63-CRN63	3

* Information about the roller type, see pg. CR-29, tab. 18

Tab. 8

N-version slider, long

N...L-series

Sizes 28 and 43

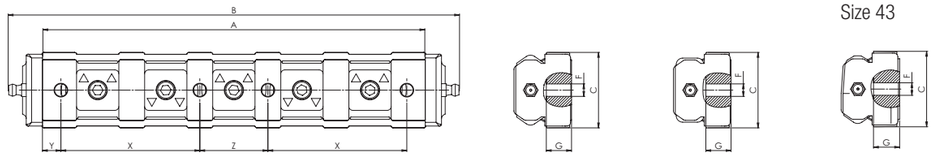

Slider NTE

Slider NUE

Slider NKE
Size 43

Fig. 31

Type	Size	A [mm]	B [mm]	C [mm]	G [mm]	F [mm]	X [mm]	Y [mm]	Z [mm]	No. of holes	Roller type used*	Number** of Rollers
NTE28L NUE28L	28	140	176	26.5	9	M5	52	5	26	4	CPA28	3 4 5
NTE43L NUE43L	43	208	245	41	13.7	M8	75.5	10	37	4	CPA43	3 4 5
NKE43L											CRA43	

* Information about the roller type, see pg. CR-29, tab. 18
** The number of roller varies according to the configuration, see pg. CR-18, fig. 32

Tab. 9

Slider configurations N...L

N...L-3-A

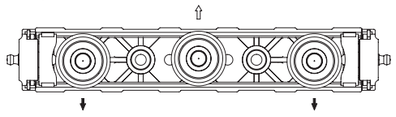

N...L-4-C

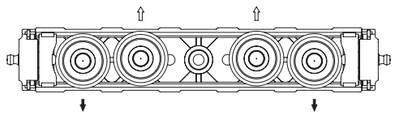

N...L-4-A

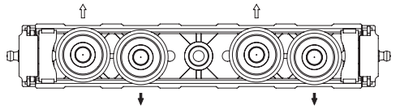

N...L-5-A

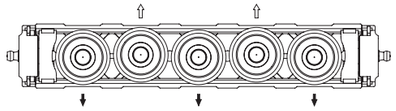

N...L-4-B

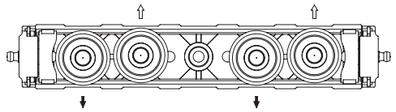

N...L-5-B

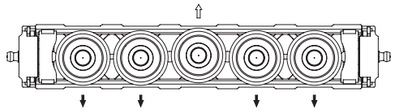

Fig. 32

C-version slider

CS-series

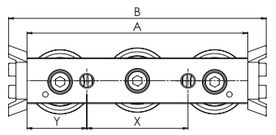

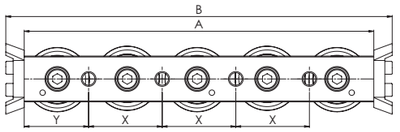

Configuration A

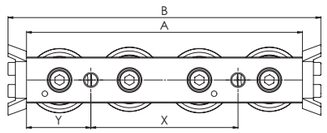

Configuration A

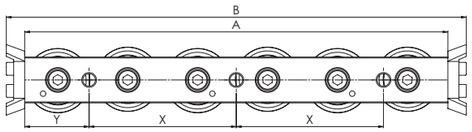

Configuration B

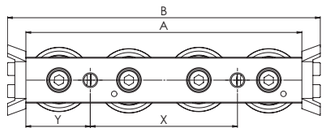

Configuration B

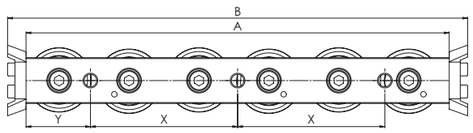

Representation of slider with wiper

Fig. 33

CS-slider with prismatic rollers for use in T- and U-rails

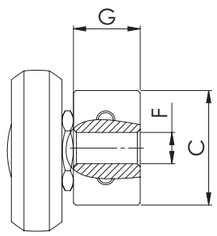

CSK-slider with crowned rollers for use in K-rails
Sizes 43 and 63

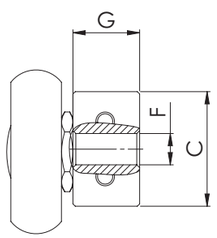

Fig. 34

Type	Size	A [mm]	B [mm]	C [mm]	G [mm]	F [mm]	X [mm]	Y [mm]	No. of holes	Roller type used*	Number of Rollers
CS	18	60	76	9.5	5.7	M5	20	20	2	CPA18-CPN18	3
		80	96	9.5	5.7	M5	40	20	2	CPA18	4
		100	116	9.5	5.7	M5	20	20	4	CPA18	5
		120	136	9.5	5.7	M5	40	20	3	CPA18	6
	28	80	100	14.9	9.7	M5	35	22.5	2	CPA28-CPN28	3
		100	120	14.9	9.7	M5	50	25	2	CPA28	4
		125	145	14.9	9.7	M5	25	25	4	CPA28	5
		150	170	14.9	9.7	M5	50	25	3	CPA28	6
	35	100	120	19.9	11.9	M6	45	27.5	2	CPA35-CPN35	3
		120	140	19.9	11.9	M6	60	30	2	CPA35	4
		150	170	19.9	11.9	M6	30	30	4	CPA35	5
		180	200	19.9	11.9	M6	60	30	3	CPA35	6
	43	120	140	24.9	14.5	M8	55	32.5	2	CPA43-CPN43	3
		150	170	24.9	14.5	M8	80	35	2	CPA43	4
		190	210	24.9	14.5	M8	40	35	4	CPA43	5
		230	250	24.9	14.5	M8	80	35	3	CPA43	6
	63	180	200	39.5	19.5	M8	54	9	4	CPA63	3
		235	255	39.5	19.5	M8	54	9.5	5	CPA63	4
		290	310	39.5	19.5	M8	54	10	6	CPA63	5
		345	365	39.5	19.5	M8	54	10.5	7	CPA63	6
CSK	43	120	140	24.9	14.5	M8	55	32.5	2	CRA43-CRN43	3
		150	170	24.9	14.5	M8	80	35	2	CRA43	4
		190	210	24.9	14.5	M8	40	35	4	CRA43	5
		230	250	24.9	14.5	M8	80	35	3	CRA43	6
	63	180	200	39.5	19.5	M8	54	9	4	CRA63	3
		235	255	39.5	19.5	M8	54	9.5	5	CRA63	4
		290	310	39.5	19.5	M8	54	10	6	CRA63	5
		345	365	39.5	19.5	M8	54	10.5	7	CRA63	6

* Information about the roller type, see pg. CR-29, tab. 18

Tab. 10

CD-series

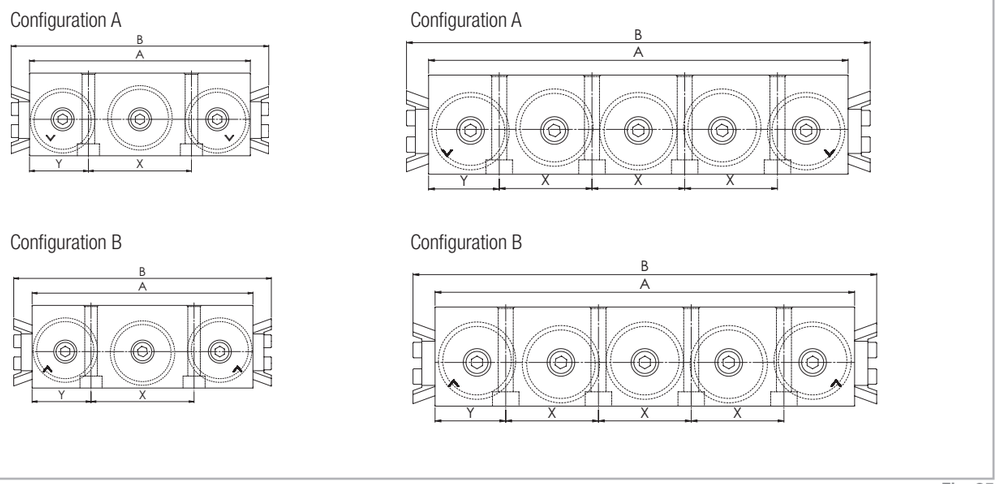

Representation of slider with wiper

Fig. 35

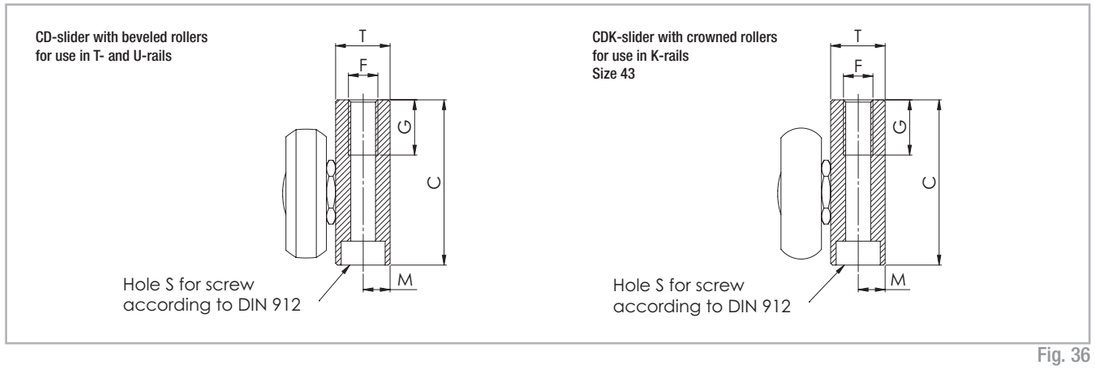

Fig. 36

Type	Size	A [mm]	B [mm]	C [mm]	T [mm]	M [mm]	S	G [mm]	F	X [mm]	Y [mm]	No. of holes	Roller type used*	Number of Rollers
CD	28	80	100	29.9	9.9	4.9	M5	15	M6	36	22	2	CPA28	3
		125	145	29.9	9.9	4.9	M5	15	M6	27	22	4	CPA28	5
	35	100	120	34.9	11.8	5.9	M6	15	M8	45	27.5	2	CPA35	3
		150	170	34.9	11.8	5.9	M6	15	M8	30	30	4	CPA35	5
	43	120	140	44.9	14.8	7.3	M6	15	M8	56	32	2	CPA43	3
		190	210	44.9	14.8	7.3	M6	15	M8	42	32	4	CPA43	5
CDK	43	120	140	44.9	14.8	7.3	M6	15	M8	56	32	2	CRA43	3
		190	210	44.9	14.8	7.3	M6	15	M8	42	32	4	CRA43	5

* Information about the roller type, see pg. CR-29, tab. 18

Tab. 11

T-rail with N- / C-slider

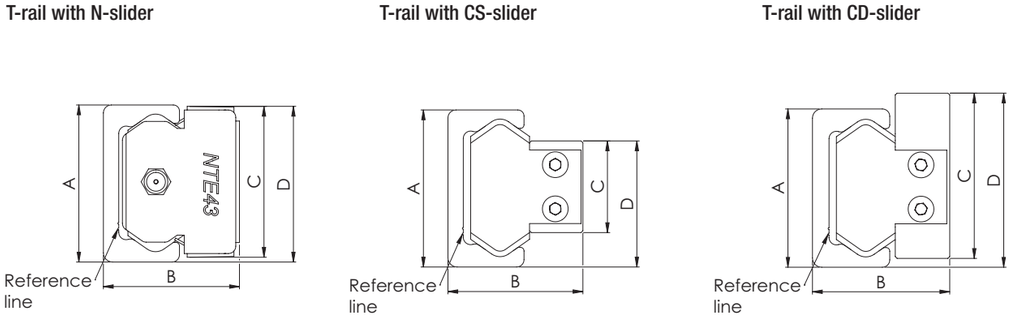

Fig. 37

Configuration	Size	A [mm]		B [mm]		C [mm]		D [mm]	
TL... / NT	18	18	+0.25 -0.10	16.5	+0.15 -0.15	17.6	0 -0.20	18.3	+0.25 -0.25
TL... / NTE	28	28	+0.25 -0.10	24	+0.25 -0.10	26.5	+0.10 -0.20	28	+0.15 -0.35
	43	43	+0.35 -0.10	37	+0.25 -0.10	40	0 -0.30	41.9	+0,20 -0.35
	63	63	+0.35 -0.10	50.5	+0.25 -0.10	60	+0.10 -0.20	62	0 -0.50
TL... / NTE...L	28	28	+0.25 -0.10	24	+0.25 -0.10	26.5	+0.10 -0.20	28	+0.15 -0.35
	43	43	+0.35 -0.10	37	+0.25 -0.10	41	0 -0.30	42.4	+0.20 -0.35
TL... / CS	18	18	+0.25 -0.10	15	+0.15 -0.15	9.5	0 -0.05	14	+0.05 -0.25
	28	28	+0.25 -0.10	23.9	+0.15 -0.15	14.9	0 -0.10	21.7	+0.05 -0.35
	35	35	+0.35 -0.10	30.2	+0.10 -0.30	19.9	+0.05 -0.15	27.85	+0.10 -0.30
	43	43	+0.35 -0.10	37	+0.15 -0.15	24.9	0 -0.15	34.3	+0.10 -0.30
	63	63	+0.35 -0.10	49.8	+0.15 -0.15	39.5	+0.15 0	51.6	+0.15 -0.30
TL... / CD	28	28	+0.25 -0.10	24.1	+0.20 -0.20	29.9	0 -0.50	32	+0.05 -0.35
	35	35	+0.35 -0.10	30.1	+0.20 -0.20	34.9	0 -0.50	37.85	+0.10 -0.30
	43	43	+0.35 -0.10	37.3	+0.20 -0.20	44.9	0 -0.50	47	+0.10 -0.30

Tab. 12

TR-rail with N- / C-slider

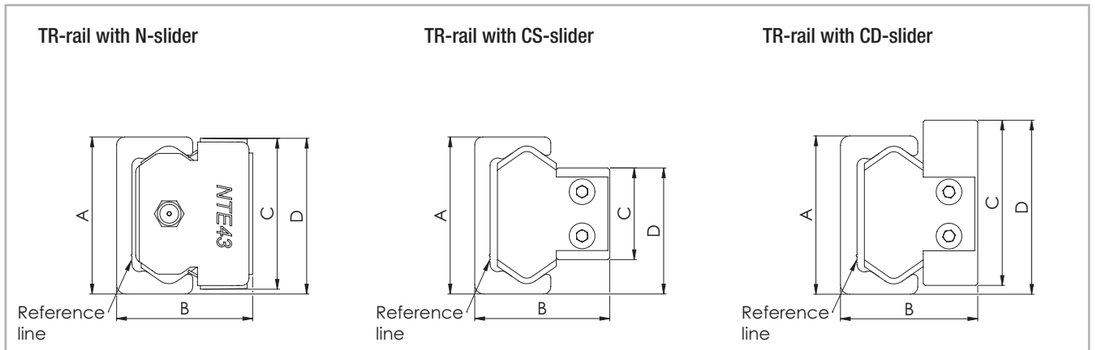

Fig. 38

Configuration	Size	A [mm]		B [mm]		C [mm]		D [mm]	
TR... / NT	18	17.95	+0.10 -0.05	16.4	+0.10 -0.05	17.6	0 -0.20	17.9	+0.15 -0.15
TR... / NTE	28	27.83	+0.10 -0.05	23.9	+0.15 -0.10	26.5	+0.10 -0.20	27.2	+0.15 -0.15
	43	42.75	+0.10 -0.05	36.9	+0.15 -0.10	40	0 -0.30	41.3	+0.15 -0.20
	63	62.8	+0.10 -0.05	50.4	+0.20 -0.10	60	+0,10 -0.30	61.3	+0.15 -0.20
TR... / NTE...L	28	27.83	+0.10 -0.05	23.9	+0.15 -0.10	26.5	+0.10 -0.20	27.2	+0.15 -0.15
	43	42.75	+0.10 -0.05	36.9	+0.15 -0.10	41	0 -0.30	41.8	+0.15 -0.20
TR... / CS	18	17.95	+0.10 -0.05	14.9	+0.10 -0.10	9.5	0 -0.05	13.8	+0.15 -0.15
	28	27.83	+0.10 -0.05	23.8	+0.10 -0.10	14.9	0 -0.10	21.3	+0.10 -0.20
	35	34.75	+0.10 -0.05	30.1	+0.10 -0.30	19.9	+0,05 -0.15	27.35	+0.10 -0.20
	43	42.75	+0.10 -0.05	36.9	+0.15 -0.10	24.9	0 -0.15	33.5	+0.10 -0.20
	63	62.8	+0.10 -0.05	49.7	+0.10 -0.15	39.5	+0.15 0	51.05	+0.15 -0.10
TR... / CD	28	27.83	+0.10 -0.05	24	+0.10 -0.20	29.9	0 -0.50	31.63	+0.10 -0.20
	35	34.75	+0.10 -0.05	30	+0.10 -0.20	34.9	0 -0.50	37.35	+0.10 -0.20
	43	42.75	+0.10 -0.05	37.2	+0.10 -0.20	44.9	0 -0.50	46.4	+0.10 -0.20

Tab. 13

U-rail with N- / C-slider

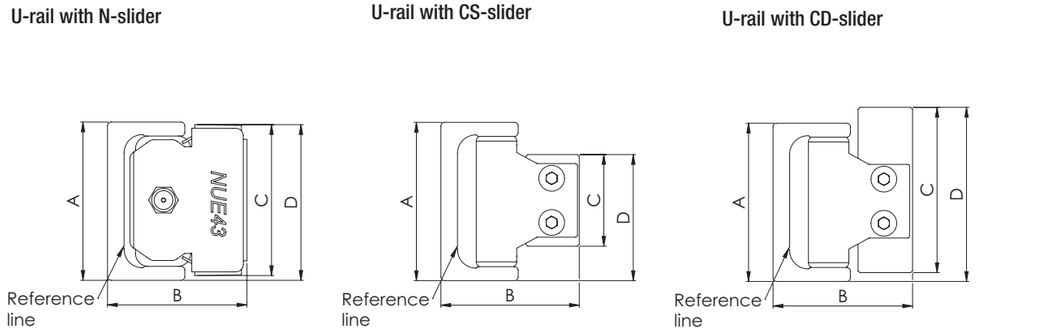

Fig. 39

Configuration	Size	A [mm]		B_{nom*} [mm]	C [mm]		D [mm]	
UL... / NU	18	18	+0.25 -0.10	16.5	17.6	0 -0.20	18.3	+0.25 -0.25
UL... / NUE	28	28	+0.25 -0.10	24	26.5	0 -0.20	28	+0.15 -0.35
	43	43	+0.35 -0.10	37	40	0 -0.30	41.9	+0.20 -0.30
	63	63	+0.35 -0.10	50.5	60	-0.20	62	0 -0.50
UL... / NUE...L	28	28	+0.25 -0.10	24	26.5	0 -0.20	28	+0.15 -0.35
	43	43	+0.35 -0.10	37	41	0 -0.30	42.4	+0.20 -0.35
UL... / CS	18	18	+0.25 -0.10	15	9.5	0 -0.05	14	+0.05 -0.25
	28	28	+0.25 -0.10	23.9	14.9	0 -0.10	21.7	+0.05 -0.35
	35	35	+0.35 -0.10	30.2	19.9	+0.05 -0.15	27.85	+0.10 -0.30
	43	43	+0.35 -0.10	37	24.9	0 -0.15	34.3	+0.15 -0.30
	63	63	+0.35 -0.10	49.8	39.5	+0.15 0	51.6	+0.15 -0.30
UL... / CD	28	28	+0.25 -0.10	24.1	29.9	0 -0.50	32	+0.05 -0.35
	35	35	+0.35 -0.10	30.1	34.9	0 -0.50	37.85	+0.10 -0.30
	43	43	+0.35 -0.10	37.3	44.9	0 -0.50	47	+0.10 -0.30

Tab. 14

* see pg. CR-40 Offset T+U-system
see pg. CR-43 Offset K+U-system

K-rail with N- / C-slider

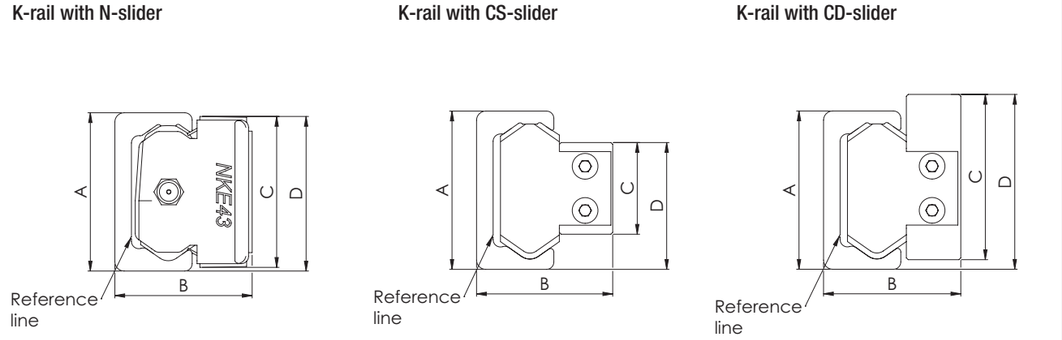

The K-rail enables the slider to rotate around its longitudinal axis (see pg. CR-42)

Fig. 40

Configuration	Size	A [mm]		B [mm]		C [mm]		D [mm]	
KL... / NKE	43	43	+0.35 -0.10	37	+0.25 -0.10	40	0 -0.30	41.9	+0.20 -0.35
	63	63	+0.35 -0.10	50.5	+0.25 -0.10	60	+0.10 -0.20	62	0 -0.50
KL... / NKE...L	43	43	+0.35 -0.10	37	+0.25 -0.10	41	0 -0.30	42.7	+0.20 -0.35
KL... / CSK	43	43	+0.35 -0.10	37	+0.15 -0.15	24.9	0 -0.15	34.3	+0.10 -0.30
	63	63	+0.35 -0.10	49.8	+0.15 -0.15	39.5	+0.15 0	51.6	+0.15 -0.30
KL... / CDK	43	43	+0.35 -0.10	37.3	+0.20 -0.20	44.9	0 -0.50	47	+0.10 -0.30

Tab. 15

Offset of fixing holes

Principle representation of offset with T-rails



Fig. 41

Configuration	Size	δ nominal [mm]	δ maximum [mm]	δ minimum [mm]
TLC / NT	18	0.45	0.95	-0.25
TLC / NTE	28	0.35	0.85	-0.4
	43	0.35	0.9	-0.5
	63	0.35	0.8	-0.55
KLC / NKE	43	0.35	0.9	-0.5
	63	0.35	0.8	-0.55
ULC / NU	18	0.4	0.9	-0.25
ULC / NUE	28	0.4	0.85	-0.3
	43	0.4	0.85	-0.45
	63	0.35	0.8	-0.45
TLV / NT	18	0.45	0.8	-0.2
TLV / NTE	28	0.35	0.7	-0.35
	43	0.35	0.75	-0.45
	63	0.35	0.65	-0.55
KLV / NKE	43	0.35	0.75	-0.45
	63	0.35	0.65	-0.55
ULV / NU	18	0.4	0.75	-0.2
ULV / NUE	28	0.4	0.7	-0.25
	43	0.4	0.7	-0.4
	63	0.35	0.65	-0.45
TLC / CS	18	0.35	0.75	-0.2
	28	0.25	0.6	-0.35
	35	0.35	0.7	-0.35
	43	0.35	0.8	-0.35
	63	0.35	0.6	-0.35
KLC / CSK	43	0.35	0.8	-0.35
	63	0.35	0.6	-0.35

Configuration	Size	δ nominal [mm]	δ maximum [mm]	δ minimum [mm]
ULC / CS	18	0.3	0.7	-0.2
	28	0.3	0.6	-0.3
	35	0.35	0.7	-0.35
	43	0.4	0.75	-0.35
	63	0.35	0.6	-0.25
TLV / CS	18	0.35	0.6	-0.15
	28	0.25	0.45	-0.3
	35	0.35	0.55	-0.3
	43	0.35	0.65	-0.3
	63	0.35	0.45	-0.35
KLV / CSK	43	0.35	0.65	-0.3
	63	0.35	0.45	-0.35
ULV / CS	18	0.3	0.55	-0.15
	28	0.3	0.45	-0.25
	35	0.35	0.55	-0.3
	43	0.4	0.6	-0.3
	63	0.35	0.45	-0.25
TRC / NT	18	0.15	0.65	-0.2
TRC / NTE	28	0.15	-0.5	-0.25
	43	0.05	0.4	-0.3
	63	0	0.4	-0.4
TRC / CS	18	0.05	0.45	-0.2
	28	0.05	0.3	-0.25
	35	0.1	0.35	-0.2
	43	0.05	0.35	-0.25
	63	0	0.2	-0.2

Tab. 16 Tab. 17

Accessories

Rollers

Version 1
Prismatic (T- and U-rail)

CPN
Concentric roller

CPA
Eccentric roller

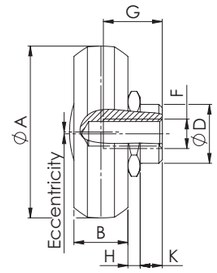

Version 2
Crowned (K-rail)

CRN
Concentric roller

CRA
Eccentric roller

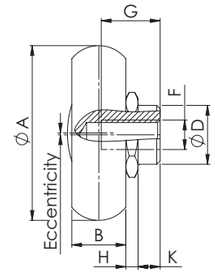

Seals: 2RS is the splash-proof seal, 2Z (2ZR for size 63) is the steel cover disc
Note: The rollers are lubricated for life

Fig. 42

Type	A [mm]	B [mm]	D [mm]	e [mm]	H [mm]	K [mm]	G [mm]	F	C [N]	C_{0rad} [N]	Weight [kg]
CPN18-2RS	14	4	6	-	1.55	1.8	5.5	M4	765	410	0.004
CPN18-2Z	14	4	6	-	1.55	1.8	5.5	M4	765	410	0.004
CPA18-2RS	14	4	6	0.4	1.55	1.8	5.5	M4	765	410	0.004
CPA18-2Z	14	4	6	0.4	1.55	1.8	5.5	M4	765	410	0.004
CPN28-2RS	23.2	7	10	-	2.2	3.8	7	M5	2130	1085	0.019
CPN28-2Z	23.2	7	10	-	2.2	3.8	7	M5	2130	1085	0.019
CPA28-2RS	23.2	7	10	0.6	2.2	3.8	7	M5	2130	1085	0.019
CPA28-2Z	23.2	7	10	0.6	2.2	3.8	7	M5	2130	1085	0.019
CPN35-2RS	28.2	7.5	12	-	2.55	4.2	9	M5	4020	1755	0.032
CPN35-2Z	28.2	7.5	12	-	2.55	4.2	9	M5	4020	1755	0.032
CPA35-2RS	28.2	7.5	12	0.7	2.55	4.2	9	M5	4020	1755	0.032
CPA35-2Z	28.2	7.5	12	0.7	2.55	4.2	9	M5	4020	1755	0.032
CPN43-2RS	35	11	12	-	2.5	4.5	12	M6	6140	2750	0.06
CPN43-2Z	35	11	12	-	2.5	4.5	12	M6	6140	2750	0.06
CPA43-2RS	35	11	12	0.8	2.5	4.5	12	M6	6140	2750	0.06
CPA43-2Z	35	11	12	0.8	2.5	4.5	12	M6	6140	2750	0.06
CPN63-2ZR	50	17.5	18	-	2.3	6	16	M8	15375	6250	0.19
CPA63-2ZR	50	17.5	18	1.2	2.3	6	16	M10	15375	6250	0.19
CRN43-2Z	35.6	11	12	-	2.5	4.5	12	M6	6140	2550	0.06
CRA43-2Z	35.6	11	12	0.8	2.5	4.5	12	M6	6140	2550	0.06
CRN63-2ZR	49.7	17.5	18	-	2.3	6	16	M8	15375	5775	0.19
CRA63-2ZR	49.7	17.5	18	1.2	2.3	6	16	M10	15375	5775	0.19

Tab. 18

Wipers for C-slider

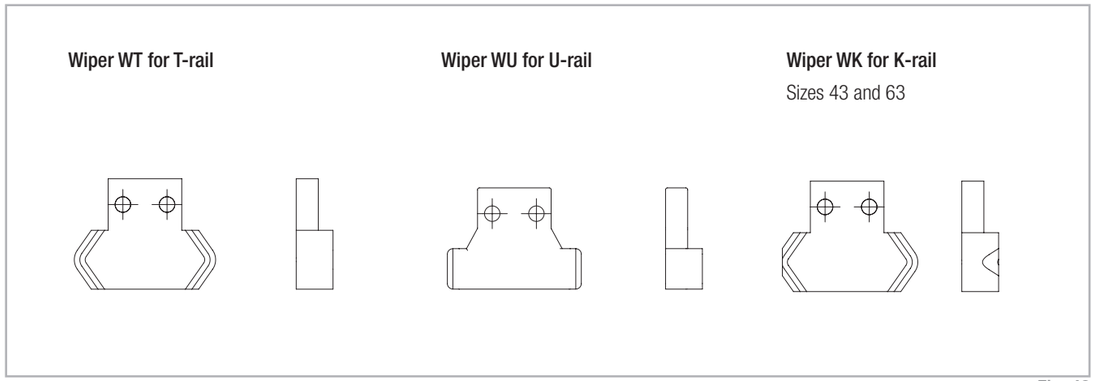

Fig. 43

Alignment fixture AT (for T- and U-rail)

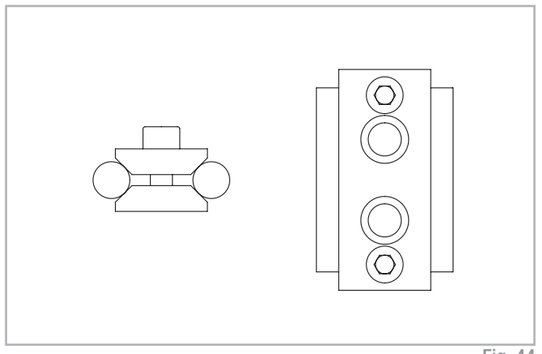

Fig. 44

Rail size	Alignment fixture
18	AT 18
28	AT 28
35	AT 35
43	AT 43
63	AT 63

Tab. 19

Alignment fixture AK (for K-rail)

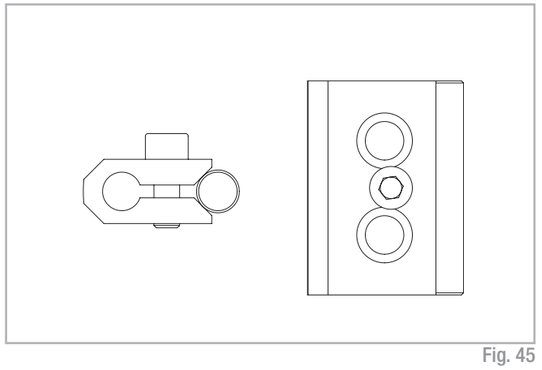

Fig. 45

Rail size	Alignment fixture
43	AK 43
63	AK 63

Tab. 20

Fixing screws

When C-holes rail is delivered, the Torx® screws are provided in the right quantity.

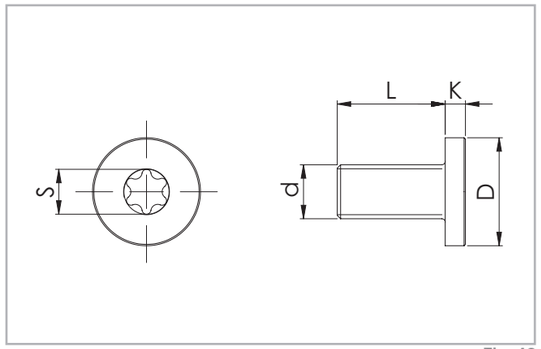

Fig. 46

Rail size	d	D [mm]	L [mm]	K [mm]	S	Tightening torque [Nm]
18	M4 x 0.7	8	8	2	T20	3
28	M5 x 0.8	10	10	2	T25	9
35	M6 x 1	13	13	2,7	T30	12
43	M8 x 1.25	16	16	3	T40	22
63	M8 x 1.25	13	20	5	T40	35

Tab. 21

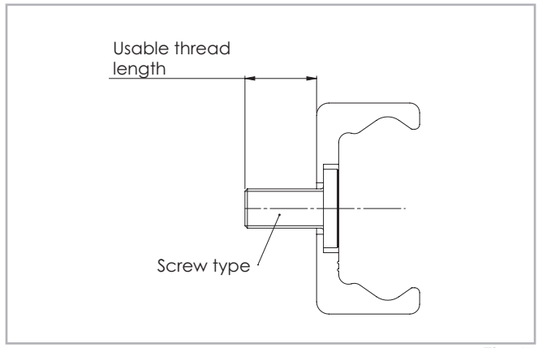

Fig. 47

Rail size	Screw type	Usable thread length [mm]
18	M4 x 8	7.2
28	M5 x 10	9
35	M6 x 13	12.2
43	M8 x 16	14.6
63	M8 x 20	17.2

Tab. 22

Manual clamp elements

Compact Rail guides can be secured with manual clamping elements. Areas of application are:

- Table cross beams and sliding beds
- Width adjustment, stops
- Positioning of optical equipment and measuring tables

The HK series is a manually activated clamping element. By using the freely adjustable clamping lever (except for HK 18, which uses hexagon socket bolt M6 DIN 913 with 3 mm drive) press the contact profile synchronously on the free surfaces of the rail. The floating mounted contact profiles guarantee symmetrical introduction of force on the guide rail.

HK 18

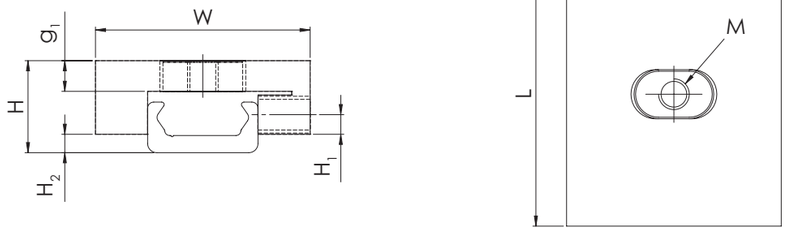

Fig. 48

HK 28-63 (except for size 35)

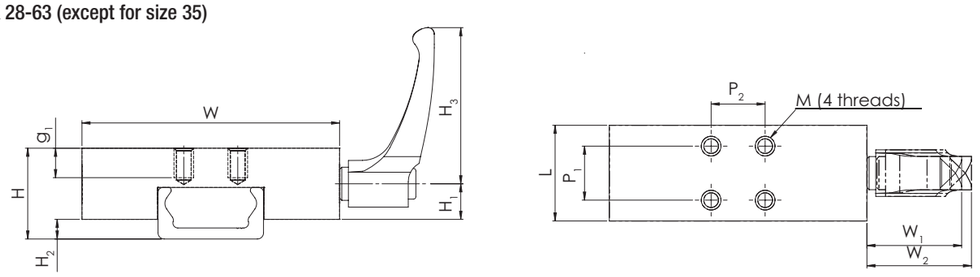

Fig. 49

Type	Size	Holding force	Tightening torque	Dimensions [mm]											M
		[N]	[Nm]	H	H_1	H_2	H_3	W	W_1	W_2	L	P_1	P_2	g_1	
HK1808A	18	150	0.5	15	3.2	3	-	35	-	-	43	0	0	6	M5
HK2808A	28	1200	7	24	17	5	64	68	38.5	41.5	24	15	15	6	M5
HK4308A	43	2000	15	37	28.5	8	78	105	46.5	50.5	39	22	22	12	M8
HK6308A	63	2000	15	50.5	35	9.5	80	138	54.5	59.5	44	26	26	12	M8

Tab. 23

Technical instructions

Linear accuracy

Linear accuracy is defined as the maximum deviation of the slider in the rail based on the side and support surface during straight line movement.

The linear accuracy, depicted in the graphs below, applies to rails that are carefully installed with all the provided screws on a level and rigid foundation.

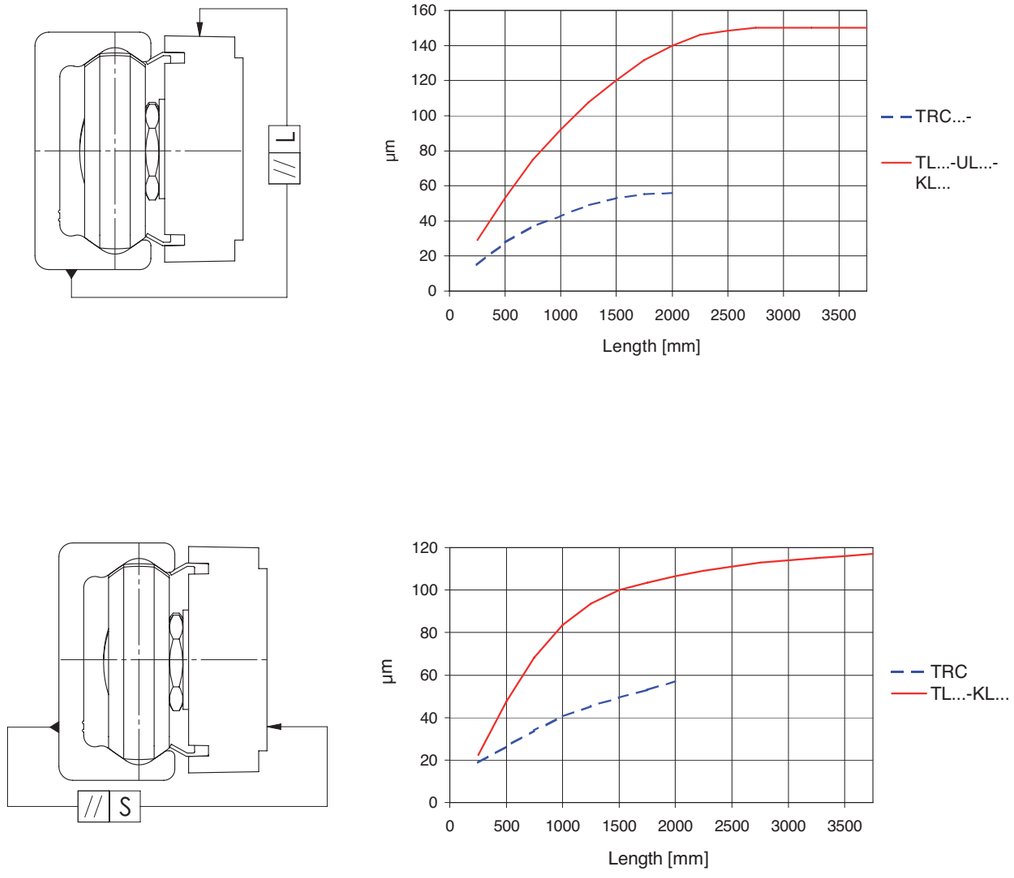

Fig. 50

Deviation of accuracy with two 3 roller sliders in one rail

Type	TL..., UL..., KL... TRC
ΔL [mm] Slider with equal arrangement 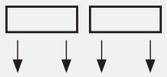	0.2
ΔL [mm] Slider with opposite arrangement 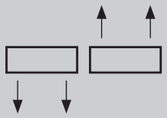	1.0
ΔS [mm]	0.05

Tab. 24

Rigidity

Total deformation

In the following deformation diagrams the total deviation of the linear guide is indicated under the effect of external loads P or moments M.
As seen from the graphs, the rigidity can be increased by supporting the sides of the rails. The graph values indicate only the deformation of the linear guide, the supporting structure is assumed infinitely rigid. All graphs refer to sliders with 3 rollers and K1 preload (standard setting). An increased preload, K2, reduces the deformation values by 25 %.

Size 18 - 43

Radial load

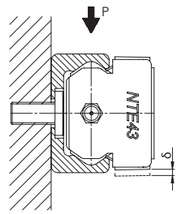

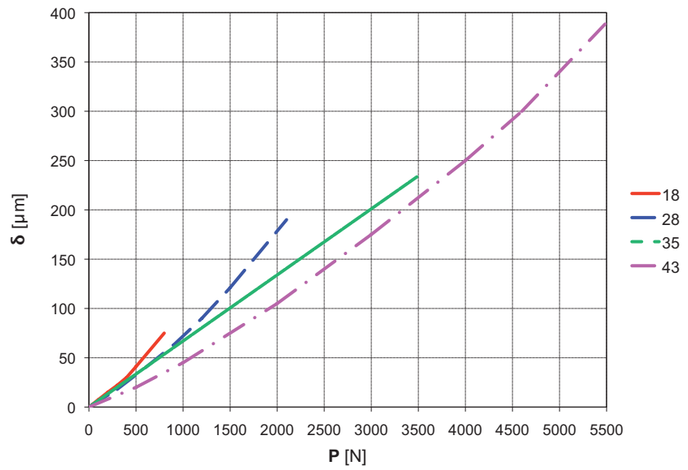

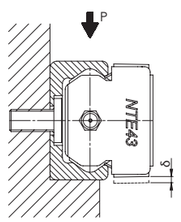

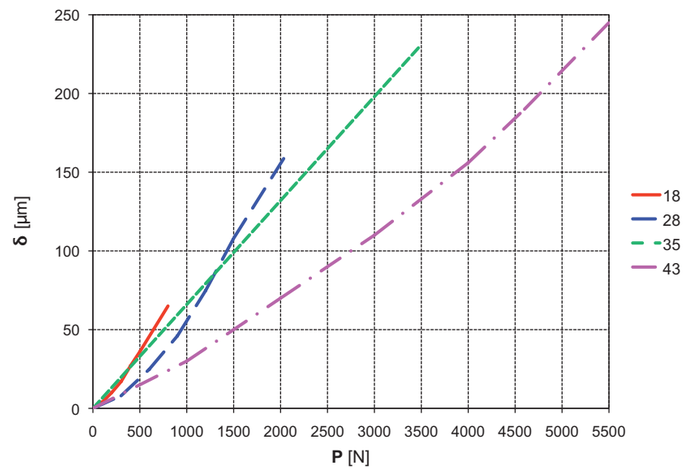

Fig. 51

Axial load

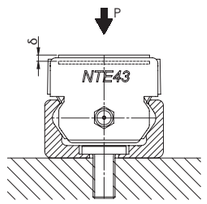

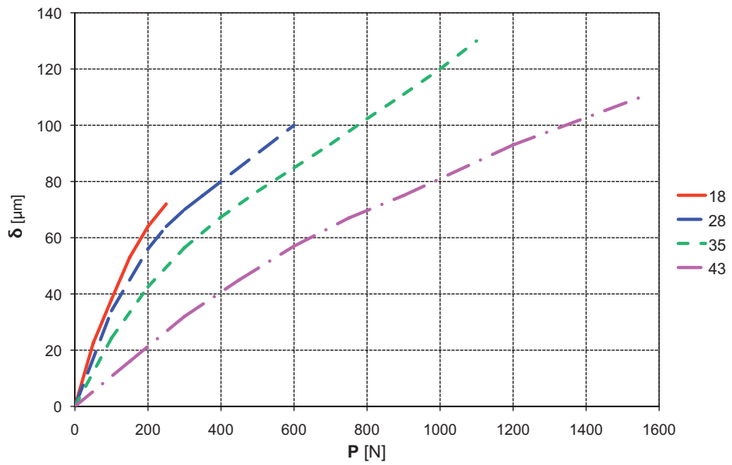

Moment Mx

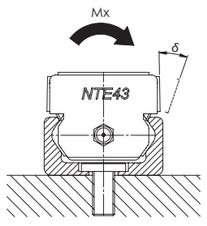

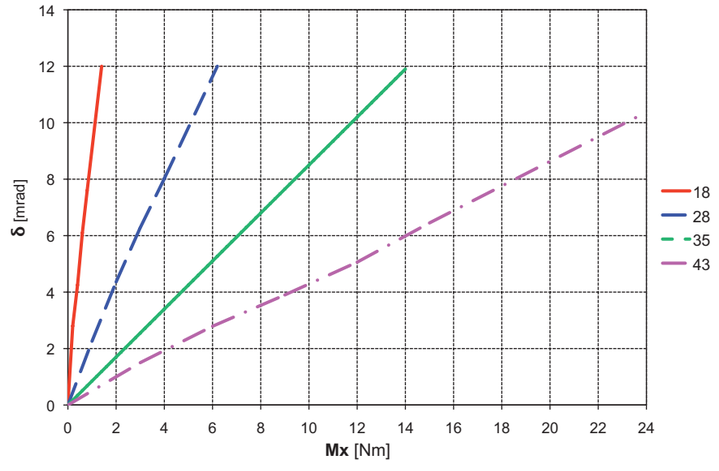

Fig. 52

Size 63

Radial load

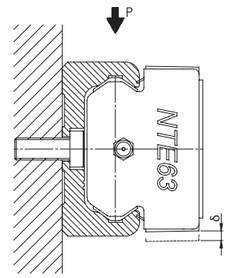

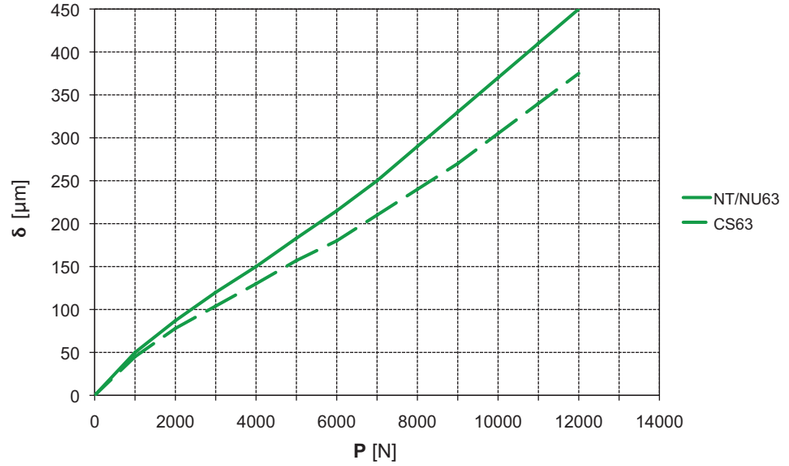

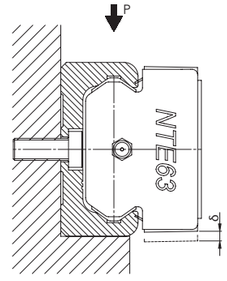

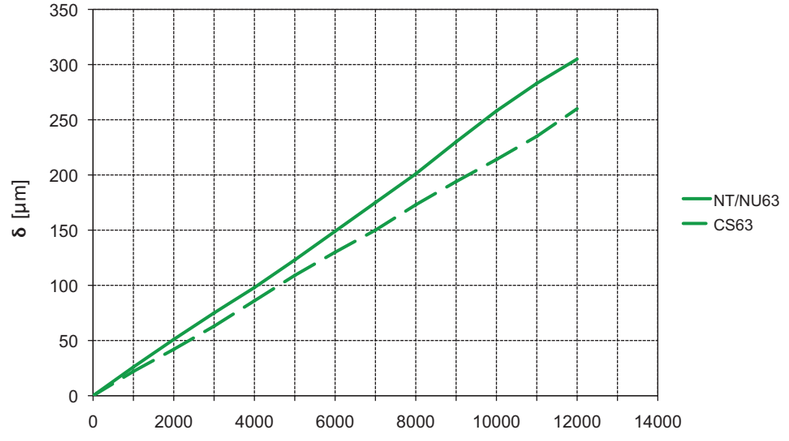

Fig. 53

Axial load

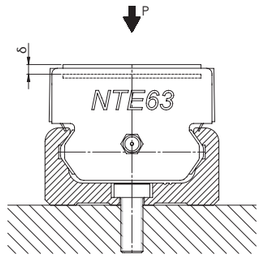

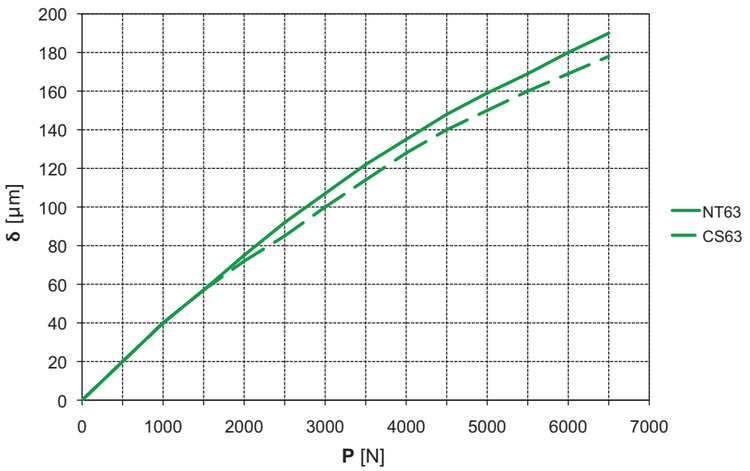

Moment Mx

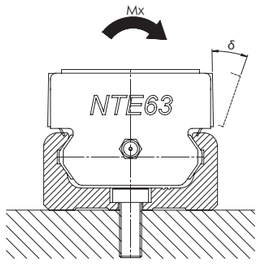

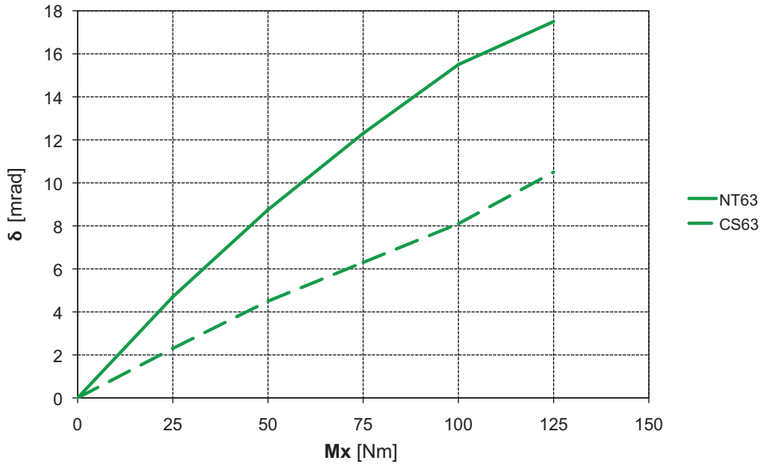

Fig. 54

Supported sides

If a higher system rigidity is required, a support of the rail sides is recommended, which can also be used as the reference surface (see fig. 55). The minimum required support depth can be taken from the adjacent table (see tab. 25).

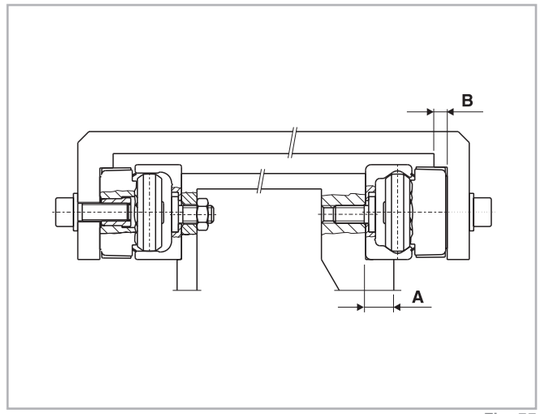

Fig. 55

Rail size	A [mm]	B [mm]
18	5	4
28	8	4
35	11	5
43	14	5
63	18	5

Tab. 25

T+U-system tolerance compensation

Axial deviations in parallelism

This problem occurs fundamentally by insufficient precision in the axial parallelism of the mounting surfaces, which results in an excessive load on the slider and thus causes drastically reduced service life.

The use of fixed bearing and compensating bearing rail (T+U-system) solves the unique problem of aligning two track, parallel guide systems. By using a T+U-system, the T-rail takes over the motion of the track while the U-rail serves as a support bearing and takes only radial forces and M_z moments.

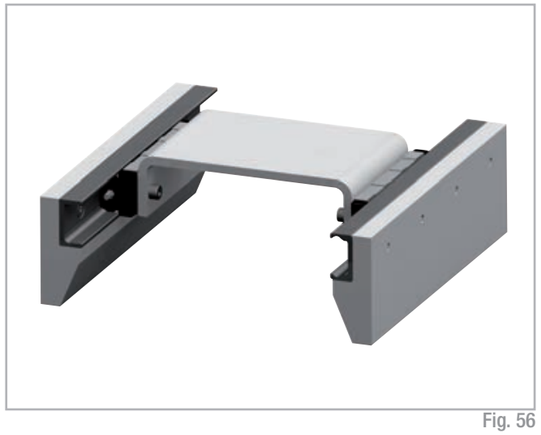

Fig. 56

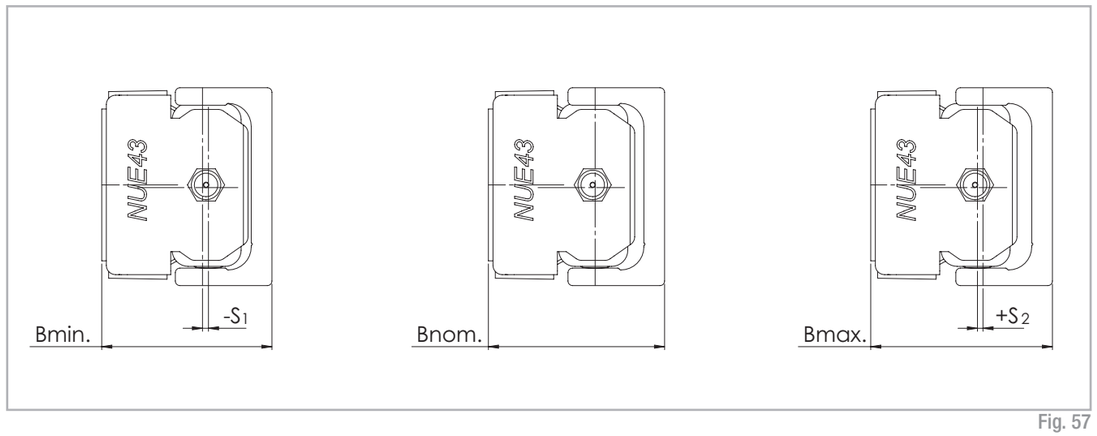

Fig. 57

T+U-system maximum offset

U-rails have flat parallel raceways that allow free lateral movement of the sliders. The maximum axial offset that can be compensated for in each slider of the U-rail is made up of the combined values S_1 and S_2 listed in table 26. Considered from a nominal value B_{nom} as the starting point, S_1 indicates the maximum offset into the rail, while S_2 represents the maximum offset towards the outside of the rail.

Slider type	S_1 [mm]	S_2 [mm]	B_{min} [mm]	B_{nom} [mm]	B_{max} [mm]
NU18	0	1.1	16.5	16.5	17.6
CS18	0.3	1.1	14.7	15	16.1
NUE28 **NUE28L**	0	1.3	24	24	25.3
CS28 **CD28**	0.6	1.3	23.3	23.9	25.2
CS35	1.3	2.7	28.9	30.2	32.9
CD35	1.3	2.7	28.8	30.1	32.8
NUE43 **NUE43L**	0	2.5	37	37	39.5
CS43	1.4	2.5	35.6	37	39.5
CD43	1.4	2.5	35.9	37.3	39.8
NUE63	0	3.5	50.5	50.5	54
CS63	0.4	3.5	49.4	49.8	53.3

Tab. 26

The application example in the adjacent drawing (see fig. 59) shows that the T+U-system implements a problem-free function of the slider even with an angled offset in the mounting surfaces.

If the length of the guide rails is known, the maximum allowable angle deviation of the screwed surfaces can be determined using this formula (the slider in the U-rail moves here from the innermost position S_1 to outermost position S_2):

$$\alpha = \arctan\frac{S^*}{L}$$

S^* = Sum of S_1 and S_2
L = Length of rail

Fig. 58

The following table (tab. 27) contains guidelines for this maximum angle deviation α, achievable with the longest guide rail from one piece.

Size	Rail length [mm]	Offset S [mm]	Angle α [°]
18	2000	1.4	0.040
28	3200	1.9	0.034
35	3600	4	0.063
43	3600	3.9	0.062
63	3600	3.9	0.062

Tab. 27

The T+U-system can be designed in different arrangements (see fig. 60). A T-rail accepts the vertical components of load P. A U-rail attached underneath the component to be guided prevents the vertical panel from swinging and is used as moment support. In addition a vertical offset in the structure, as well as possible existing unevenness of the support surface, is compensated for.

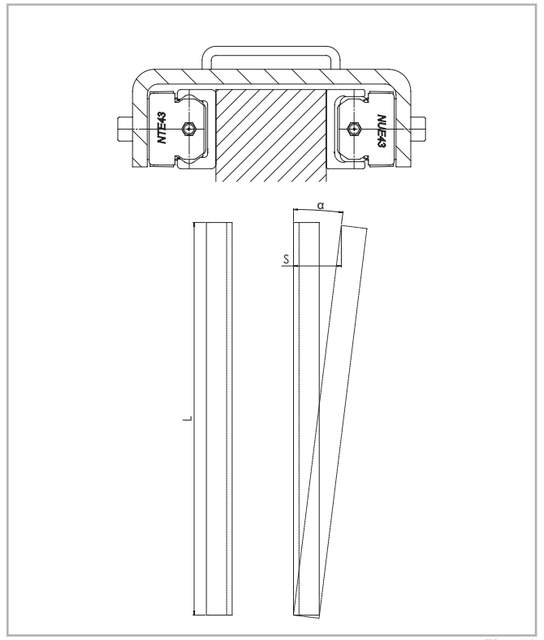

Fig. 59



Fig. 60

K+U-system tolerance compensation

Deviations in parallelism in two planes

The K+U-system, like the T+U-system, can compensate for axial deviations in parallelism. Additionally, the K+U system has the option of rotating the slider in the rail, which will compensate for other deviations in parallelism, e.g. height offset.

The unique raceway contour of the K-rail allows the slider a certain rotation around its longitudinal axis, with the same linear precision as with a T-rail. With the use of a K+U-system, the K-rail accounts for the main loads and the motion of the track. The U-rail is used as a support bearing and takes only radial forces and M_z moments. The K-rail must always be installed so that the radial load of the slider is always supported by at least 2 load bearing roller sliders, which lie on the V-shaped raceway (reference line) of the rail.

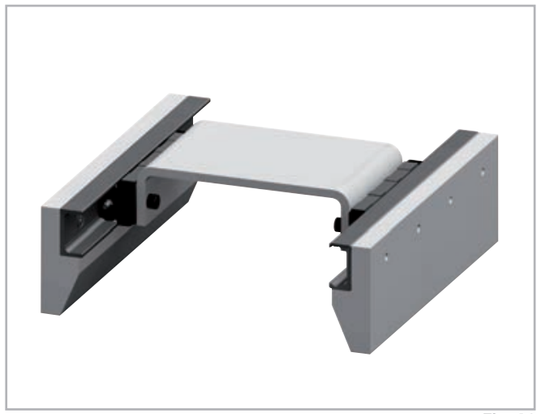

Fig. 61

K-rails and sliders are available in both sizes 43 and 63.

The custom NKE-slider may only be used in K-rails and cannot be exchanged with other Rollon sliders. The maximum allowable rotation angle of the NKE- and NUE-sliders are shown in the following table 28 and figure 62. α_1 is the maximum rotation angle counterclockwise, α_2 is clockwise.

Slider type	α_1 [°]	α_2 [°]
NKE43 and NUE43	2	2
NKE63 and NUE63	1	1

Tab. 28

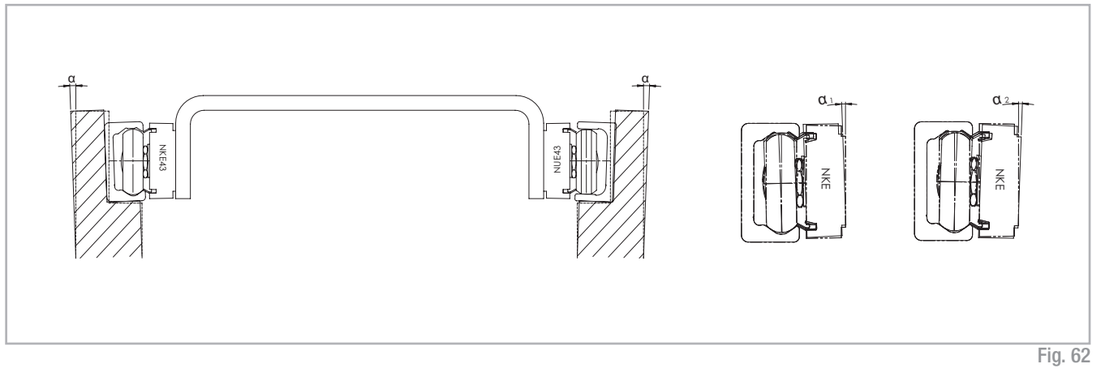

Fig. 62

K+U-system maximum offset

It must be noted that the slider in the U-rail will turn during the movement and rotation of the slider in the K-rail to allow an axial offset. During the combined effect of these movements, you must not exceed the maximum values (see tab. 29). If a maximum rotated NUE- slider is observed (2° for size 43 and 1° for size 63), the maximum and minimum position of the slider in the U rail results from the values B_{0max} and B_{0min}, which are already considered by the additional rotation caused axial offset. B_{0nom} is a recommended nominal starting value for the position of a NUE-slider in the U-rail of a K+U-system.

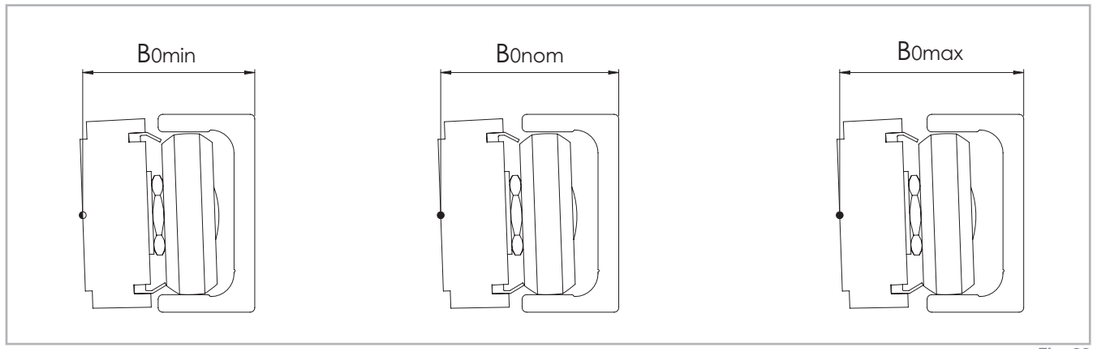

Fig. 63

Slider type	B_{0min} [mm]	B_{0nom} [mm]	B_{0max} [mm]
NUE43 NUE43L	37.6	38.85	40.1
CS43	37.6	38.85	40.1
CD43	37.9	39.15	40.4
NUE63	50.95	52.70	54.45
CS63	49.85	51.80	53.75

Tab. 29

If a K-rail is used in combination with a U-rail, with guaranteed problem-free running and without extreme slider load, a pronounced height difference between the two rails can also be compensated for. The following illustration shows the maximum height offset b of the mounting surfaces in relation to the distance a of the rails (see fig. 64).

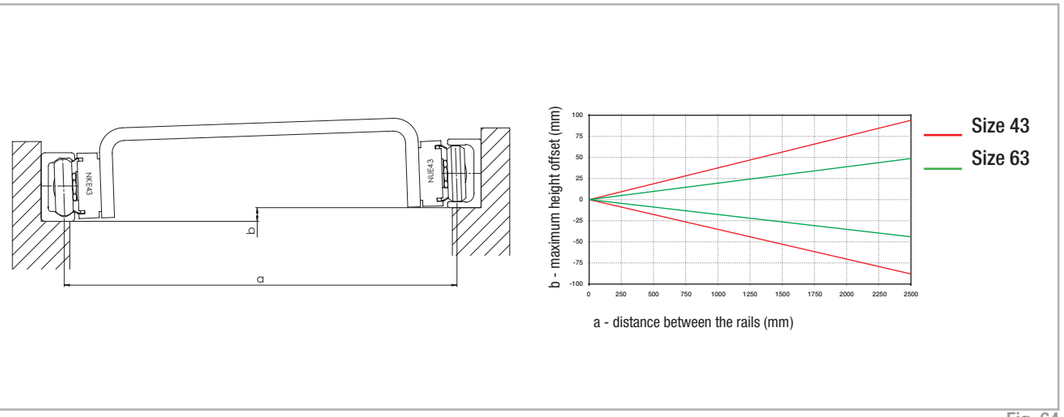

Fig. 64

Even the K+U-system can be used in different arrangements. If the same example as with the T+U-system is observed (see pg. CR-41, fig. 60), this solution, in addition to the prevention of vibrations and moments, also enables the compensation of larger deviations in parallelism in the vertical direction, without negative consequences to the guide. This is particularly important for longer strokes as it is more difficult to obtain a correct vertical parallelism.



Fig. 65

Preload

Preload classes

The factory installed systems, consisting of rails and sliders, are available in two preload classes:

Standard preload K1 means a rail-slider combination with minimum preload which means the rollers are adjusted free of clearance for optimal running properties.

Usually preload K2 is used for rail-slider systems for increasing the rigidity (see pg. CR-35). When using a system with K2 preload a reduction of the loading capacities and service life must be taken into consideration (see tab. 30).

Preload class	Reduction y
K1	-
K2	0.1

Tab. 30

This coefficient y is used in the calculation formula for checking the static load and lifetime (see pg. CR-50, fig. 75 and pg. CR-54, fig. 92).

The interference is the difference between the contact lines of the rollers and the raceways of the rail.

Preload class	Interference* [mm]	Rail type
K1	0.01	all
K2	0.03	T, U...18
	0.04	T, U...28
	0.05	T, U...35
	0.06	T, U, K...43, T, U, K...63

* Measured on the largest interior dimension between the raceways

Tab. 31

External preload

The unique design of the Compact Rail product family enables applying a partial external preload on selected locations along the entire guide.

An external preload can be applied by pressure along the side surfaces of the guide rail according to the drawing below (see fig. 66). This local preload results in higher rigidity only at the locations where it is necessary (e.g. on reversing points with high dynamic auxiliary forces).

This partial preload increases the service life of the linear guide by avoiding a continually increased preload over the entire length of the guide. Also the required drive force of the linear carriage in the non-preloaded areas is reduced.

The amount of the externally applied preload is determined using two dial indicators by measuring the deformation of the rail sides. These are deformed by thrust blocks with pressure screws. The external preload must be applied when the slider is not directly located in the pressure zone.

Size	A [mm]
18	40
28	55
35	75
43	80
63	120

Tab. 32

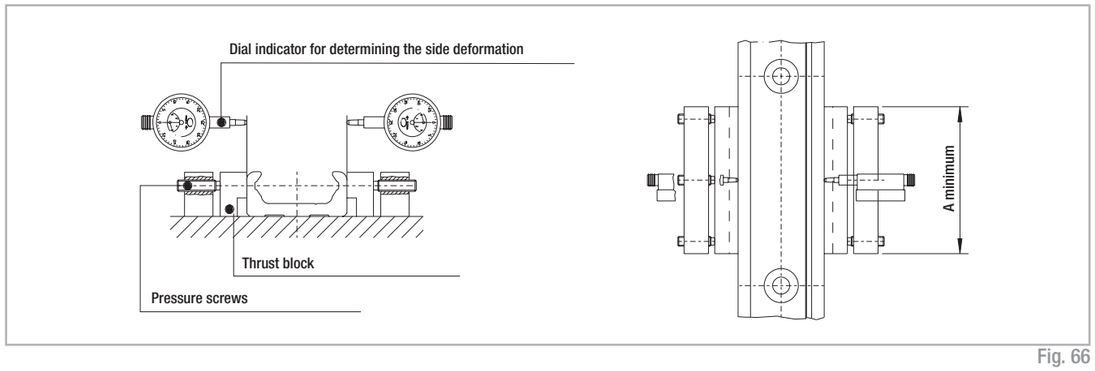

Fig. 66

The graph below indicates the value of the equivalent load as a function of the total deformation of both rail sides. The data relates to sliders with three rollers (see fig. 67).

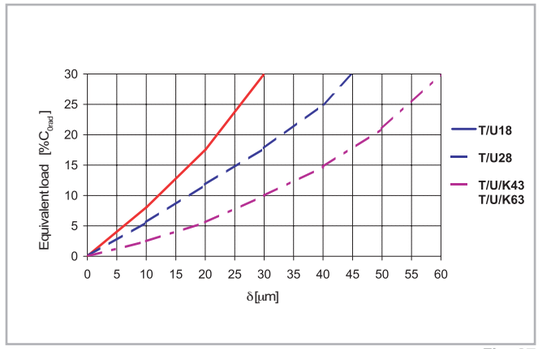

Fig. 67

Drive force

Frictional resistance

The drive force required for moving the slider is determined by the combined resistance of the rollers, wipers and seals.

The ground raceways and rollers have a minimal coefficient of friction, which remains almost the same in both the static and dynamic state. The wiper and longitudinal seals are designed for an optimum protection of the system, without a significant negative influence on the quality of motion. The overall friction of the Compact Rail also depends on external factors such as lubrication, preload and additional forces. Table 33 below contains the coefficients of friction for each slider type (for CSW and CDW sliders no friction occurs to μ_s).

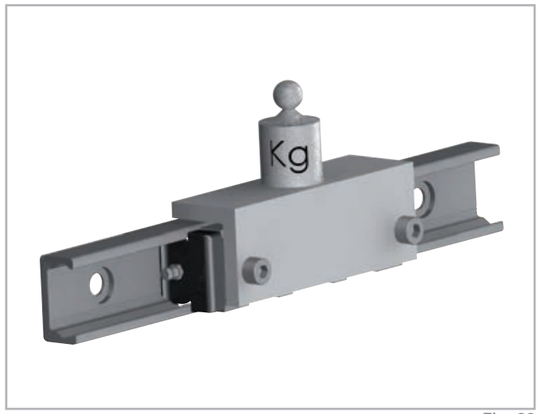

Fig. 68

Size	μ Roller friction	μ_w Wiper friction	μ_s Friction of longitudinal seals
18	0.003	$\frac{\ln (m \cdot 1000)^*}{0.98 \cdot m \cdot 1000}$	0.0015
28	0.003	$\frac{\ln (m \cdot 1000)^*}{0.06 \cdot m \cdot 1000}$	$\frac{\ln (m \cdot 1000)^*}{0.15 \cdot m \cdot 1000}$
35	0.005		
43	0.005		
63	0.006		

* Kilograms must be used for load m

Tab. 33

The values given in Table 33 apply to external loads, which, with sliders with three rollers, are at least 10 % of the maximum load rating. For calculating the driving force for lower loads, please contact Rollon technical support.

Calculation of drive force

The minimum required drive force for the slider is determined with the coefficients of friction (see tab. 33) and the following formula (see fig. 69):

$$F = (\mu + \mu_w + \mu_s) \cdot m \cdot g$$

m = mass (kg)
g = 9.81 m/s²

Fig. 69

Example calculation:

If a NTE43 slider is used with a radial load of 100 kg, the result is μ = 0.005; from the formula the following is calculated:

$$\mu_s = \frac{\ln (100000)}{0.15 \cdot 100000} = 0.00076$$

$$\mu_w = \frac{\ln (100000)}{0.06 \cdot 100000} = 0.0019$$

Fig. 70

This is the minimum drive force for this example:

$$F = (0.005 + 0.0019 + 0.00076) \cdot 100 \cdot 9.81 = 7.51 \text{ N}$$

Fig. 71

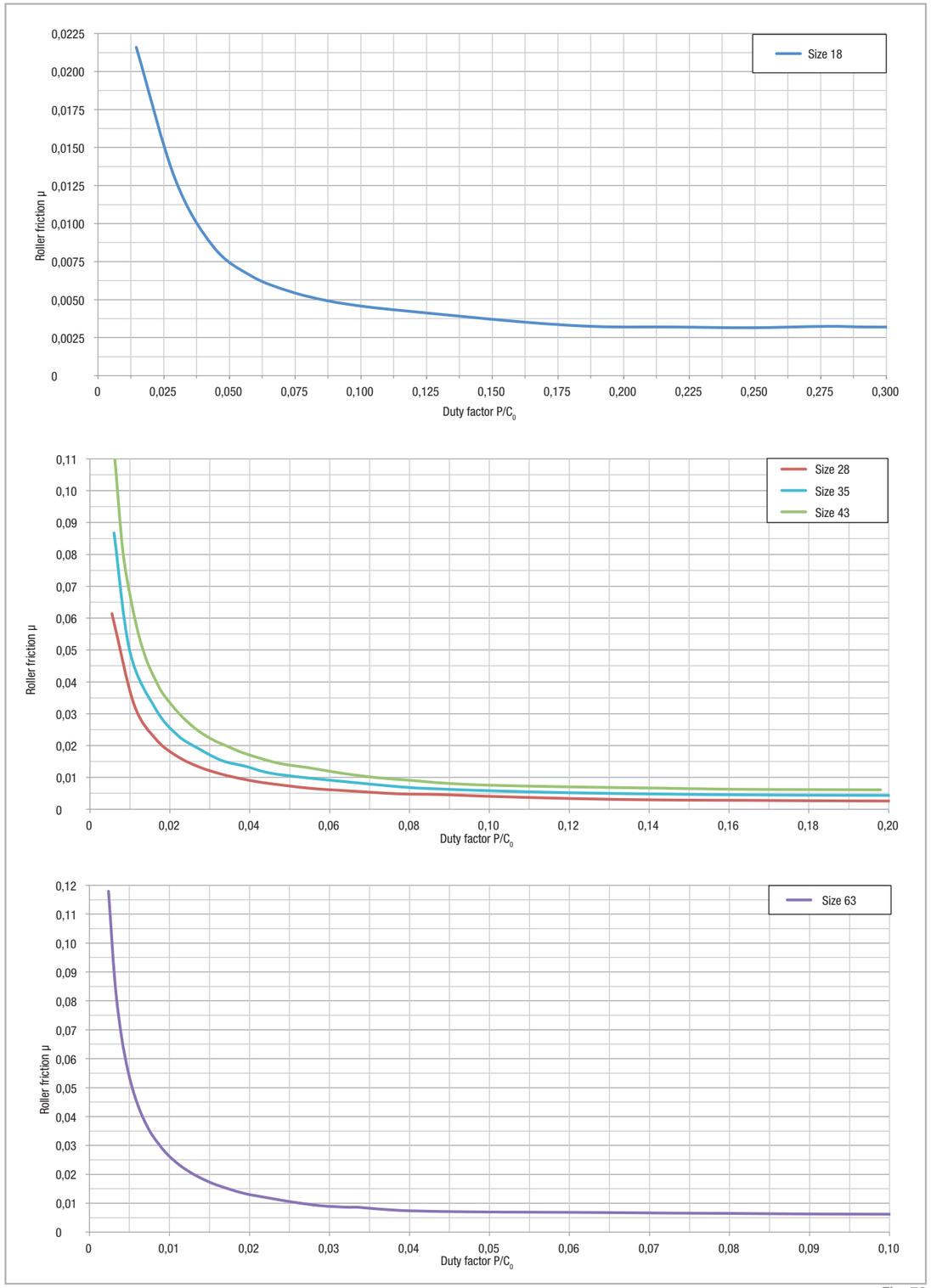

Fig. 72

Static load

The radial load capacity rating, C_{0rad} the axial load capacity rating C_{0ax}, and moments M_x, M_y, M_z indicate the maximum permissible values of the load (see pg. CR-9ff), higher loads will have a detrimental effect on the running quality. A safety factor, S_0, is used to check the static load, which takes into account the basic parameters of the application and is defined more in detail in the following table:

Safety factor S_0

No shock nor vibration, smooth and low-frequency reverse, high assembly accuracy, no elastic deformations	1 - 1.5
Normal installation conditions	1.5 - 2
Shock and vibration, high-frequency reverse, significant elastic deformation	2 - 3.5

Fig. 73

The ratio of the actual load to maximum permissible load may be as large as the reciprocal of the accepted safety factor, S_0, at the most.

$$\frac{P_{0rad}}{C_{0rad}} \le \frac{1}{S_0} \qquad \frac{P_{0ax}}{C_{0ax}} \le \frac{1}{S_0} \qquad \frac{M_1}{M_x} \le \frac{1}{S_0} \qquad \frac{M_2}{M_y} \le \frac{1}{S_0} \qquad \frac{M_3}{M_z} \le \frac{1}{S_0}$$

Fig. 74

The above formulas are valid for a single load case.
If two or more forces are acting simultaneously, please check the following formula:

$$\frac{P_{0rad}}{C_{0rad}} + \frac{P_{0ax}}{C_{0ax}} + \frac{M_1}{M_x} + \frac{M_2}{M_y} + \frac{M_3}{M_z} + y \le \frac{1}{S_0}$$

P_{0rad} = effective radial load (N)
C_{0rad} = permissible radial load (N)
P_{0ax} = effective axial load (N)
C_{0ax} = permissible axial load (N)
M_1, M_2, M_3 = external moments (Nm)
M_x, M_y, M_z = maximum permissible moments in the different loading directions (Nm)
y = reduction due to preload

Fig. 75

The safety factor S_0 can lie on the lower given limit if the occurring forces can be determined with sufficient precision. If shock and vibration are present, the higher value should be selected. For dynamic applications higher safety is required. Please contact Rollon technical support.

Calculation formulas

Examples of formulas for determining the forces on the most heavily loaded slider
For an explanation of the parameters in the formulas see pg. CR-53, fig. 90

Horizontal movement
Static test

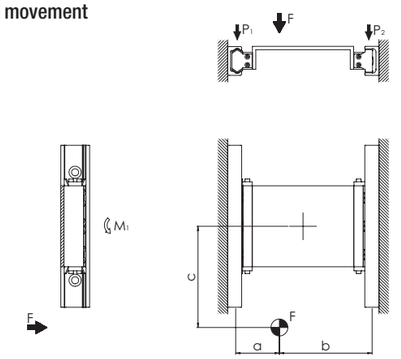

Fig. 76

Slider load:

$$P_1 = F \cdot \frac{b}{a+b}$$

$$P_2 = F - P_1$$

in addition each slider is loaded by a moment:

$$M_1 = \frac{F}{2} \cdot c$$

Fig. 77

Horizontal movement
Static test

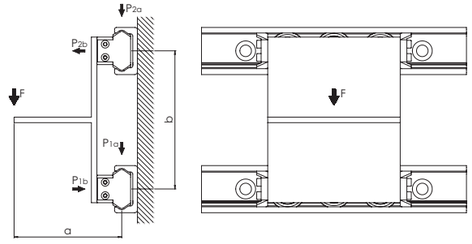

Fig. 78

Slider load:

$$P_{1a} \cong P_{2a} = \frac{F}{2}$$

$$P_{2b} \cong P_{1b} = F \cdot \frac{a}{b}$$

Fig. 79

Horizontal movement
Static test

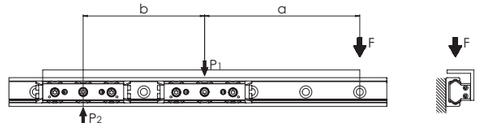

Fig. 80

Slider load:

$$P_2 = F \cdot \frac{a}{b}$$

$$P_1 = P_2 + F$$

Fig. 81

Note: Applies only if the distance between centers of the sliders b > 2x slider length

Horizontal movement

Static test

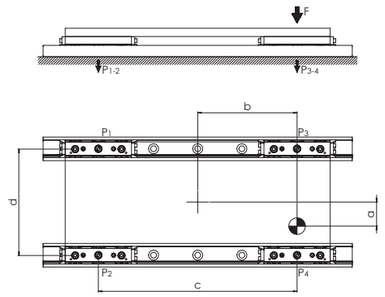

Fig. 82

Slider load:

$$P_1 = \frac{F}{4} - \left(\frac{F}{2} \cdot \frac{b}{c}\right) - \left(\frac{F}{2} \cdot \frac{a}{d}\right)$$

$$P_2 = \frac{F}{4} - \left(\frac{F}{2} \cdot \frac{b}{c}\right) + \left(\frac{F}{2} \cdot \frac{a}{d}\right)$$

$$P_3 = \frac{F}{4} + \left(\frac{F}{2} \cdot \frac{b}{c}\right) - \left(\frac{F}{2} \cdot \frac{a}{d}\right)$$

$$P_4 = \frac{F}{4} + \left(\frac{F}{2} \cdot \frac{b}{c}\right) + \left(\frac{F}{2} \cdot \frac{a}{d}\right)$$

Fig. 83

Note: It is defined that slider no. 4 is always located closest to the point where the force is applied.

Vertical movement

Static test

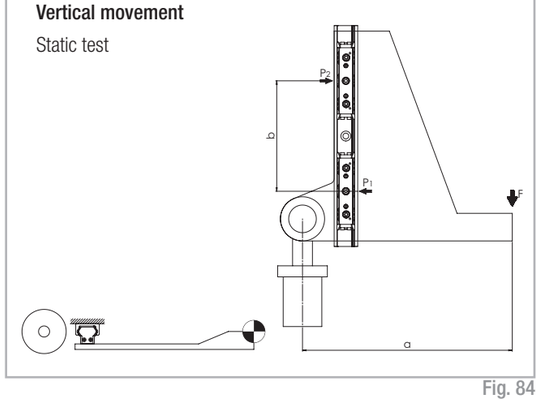

Fig. 84

Slider load:

$$P_1 \cong P_2 = F \cdot \frac{a}{b}$$

Fig. 85

Note: Applies only if the distance between centers of the sliders b > 2x slider length

Horizontal movement

Static test

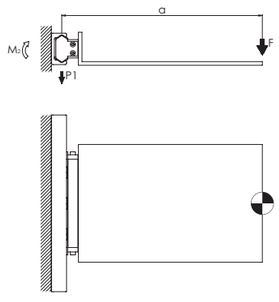

Fig. 86

Slider load:

$$P_1 = F$$

$$M_2 = F \cdot a$$

Fig. 87

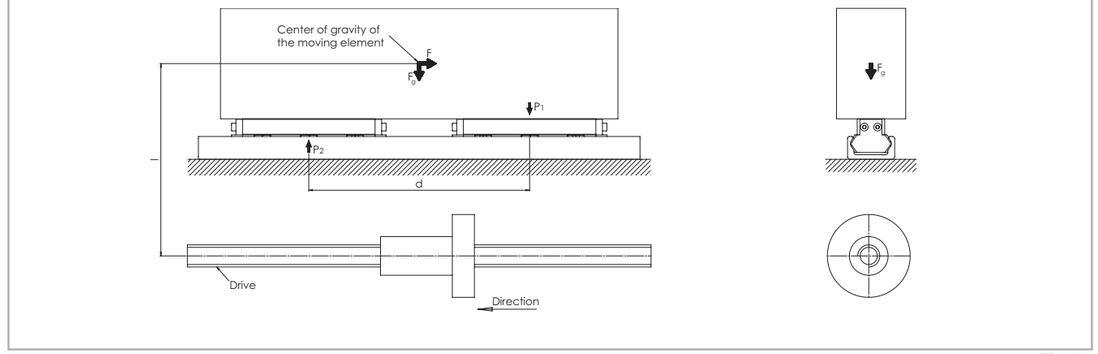

Fig. 88

Horizontal movement

Test with a moving element of the weight-force F_g at the instant the direction of movement changes

Inertial force

$$F = m \cdot a$$

Slider load at time of reverse

$$P_1 = \frac{F \cdot l}{d} + \frac{F_g}{2} \qquad P_2 = \frac{F_g}{2} - \frac{F \cdot l}{d}$$

Fig. 89

Explanation of the calculation formula

F	=	effective force (N)
F_g	=	weight-force (N)
P_1, P_2, P_3, P_4	=	effective load on the slider (N)
M_1, M_2	=	effective moment (Nm)
m	=	mass (kg)
a	=	acceleration (m/s^2)

Fig. 90

Service life calculation

The dynamic load capacity C is a conventional variable used for calculating the service life. This load corresponds to a nominal service life of 100 km. For values of the individual slider see pg. CR-9. Load capacities. The following formula (see fig. 91) links the calculated theoretical service life to the dynamic load capacity and the equivalent load:

$$L_{Km} = 100 \cdot \left(\frac{C}{P} \cdot \frac{f_c}{f_i} \cdot f_h\right)^3$$

L_{km} = theoretical service life (km)
C = dynamic load capacity (N)
P = effective equivalent load (N)
f_c = contact factor
f_i = application coefficient
f_h = stroke factor

Fig. 91

The equivalent load P corresponds in its effects to the sum of the forces and moments working simultaneously on a slider. If these different load components are known, P results as follows:

$$P = P_r + \left(\frac{P_a}{C_{0ax}} + \frac{M_1}{M_x} + \frac{M_2}{M_y} + \frac{M_3}{M_z} + y\right) \cdot C_{0rad}$$

y = reduction due to preload

Fig. 92

Here the external loads are assumed as constant in time. Brief loads, which do not exceed the maximum load capacities, do not have any relevant effect on the service life and can therefore be neglected.
The contact factor f_c refers to applications in which several sliders pass the same rail section. If two or more sliders move over the same point of a rail, the contact factor according to table 34 to be taken into account in the formula for calculation of the service life.

Number of sliders	1	2	3	4
f_c	1	0.8	0.7	0.63

Tab. 34

The application coefficient f_i takes into account the operational conditions in the service life calculation. It has a similar significance to the safety factor S_0 in the static load test. It is calculated as described in the following table:

f_i	
Neither shocks nor vibrations, smooth and low-frequency direction change; clean operating conditions; low speeds (<1 m/s)	1 - 1.5
Slight vibrations, average speeds (1 - 2.5 m/s) and average frequency of direction change	1.5 - 2
Shocks and vibrations, high speeds (> 2.5 m/s) and high-frequency direction change; extreme dirt contamination	2 - 3.5

Tab. 35

The stroke factor f_h takes into account the higher load of the raceways and rollers during short strokes on the same total length of run. The corresponding values are taken from the following graph (for strokes longer than 1 m, f_h =1):

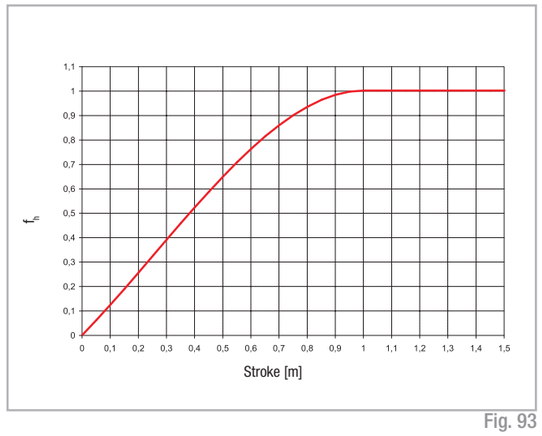

Fig. 93

Lubrication

Roller pin lubrication

The bearings inside the Rollers are lubricated for life. To reach the calculated service life (see pg. CR-54), a film of lubricant should always be present between the raceway and roller, this also serves to protect against corrosion of the ground raceways.

Lubrication of the raceways

Proper lubrication during normal conditions:

- reduces friction
- reduces wear
- reduces the load of the contact surfaces through elastic deformations
- reduces running noise

N-slider lubrication

Lubrication when using N-sliders

NTE-, NUE- and NKE-sliders (except for types NT/NU18) are equipped with a self-lubrication kit for periodic lubrication of the slider.
This provides a progressive release of lubricant (see tab. 36) on the raceway during operation of the slider. The expected service life is up to 2 million cycles, depending on the type of application. The zerk fittings (see fig. 94) provide the lubrication.

Lubricant	Thickening agent	Temperature range [°C]	Dynamic viscosity [mPa·s]
Mineral oil	Lithium soap	-20... to +120	< 1000

Tab. 36

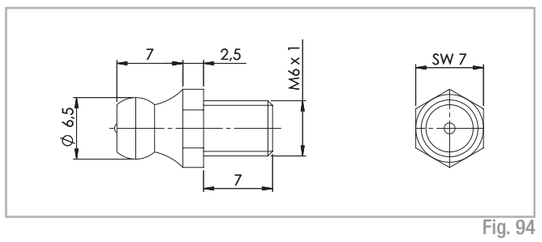

Fig. 94

Replacement of N-slider wiper head

Sliders NTE, NUE and NKE are equipped with a safety system made of longitudinal sealing lips and rigid, spring-preloaded, and therefore self-adjusting, wipers on both sides of the head for automatic cleaning of the raceways. The slider heads can be removed for replacement. To do this it is necessary to loosen the zerk fittings (except for types NT/NU18), which should be refastened after installing the new heads with the following tightening torque:

Slider type	Tightening torque [Nm]
NTE, NUE28	0.4 - 0.5
NTE, NUE, NKE43 and 63	0.6 - 0.7

Tab. 37

C-slider lubrication

Lubrication when using C-sliders

The C series sliders can be provided with wipers made of polyamide to remove contaminants on the raceways. Since the sliders do not have a self-lubrication kit, manual lubrication of the raceways is required. A guideline is to lubricate the raceways every 100 km or every 6 months.
We recommend a roller bearing lubricant with a lithium base of average consistency (see tab. 38).

Lubricant	Thickening agent	Temperature range [°C]	Dynamic viscosity [mPas]
Roller bearing lubricant	Lithium soap	-20 to +170	4500

Tab. 38

Different lubricants are available on request for special applications:

- FDA-approved lubricant for use in the food industry
- specific lubricant for clean rooms
- specific lubricant for the marine technology sector
- specific lubricant for high and low temperatures

For specific information, contact Rollon technical support.

Corrosion protection

The Compact Rail product family has a standard corrosion protection system by means of electrolytic-zinc plating according to ISO 2081. If increased corrosion protection is required, application-specific surface treatments are available upon request, e.g. approved nickel plated for use in the food industry. For more information contact Rollon technical support.

Speed and acceleration

The Compact Rail product family is suitable for high operating speeds and accelerations.

Size	Speed [m/s]	Acceleration [m/s²]
18	3	10
28	5	15
35	6	15
43	7	15
63	9	20

Tab. 39

Operating temperatures

The temperature range for continuous operation is: -20 °C / +120 °C with occasional peaks up to +150 °C.
Peaks up to +170 °C can also be reached with the use of C-series sliders (except size 63) not equipped with polyamide wipers.

Installation instructions

Fixing holes

V-holes with 90° bevels

The selection of rails with 90° countersunk holes is based on the precise alignment of the threaded holes for installation. Here the complex alignment of the rail to an external reference is omitted, since the rail aligns during installation by the self-centering of the countersunk screws on the existing hole pattern.

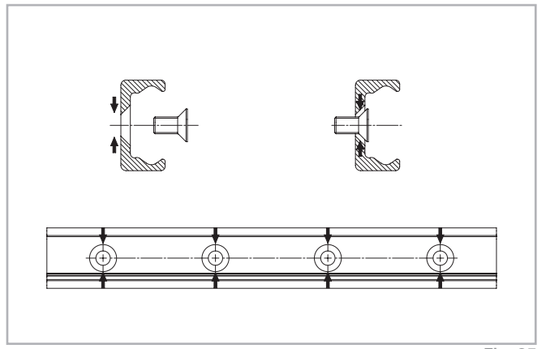

Fig. 95

C-holes with cylindrical counterbore

When C-holes rail is delivered, the Torx® screws are provided in the right quantity. The cylindrical screw has, as shown, some play in the countersunk fixing hole, so that an optimum alignment of the rail can be achieved during installation (see fig. 96).

The area T is the diameter of the possible offset, in which the screw center point can move during the precise alignment.

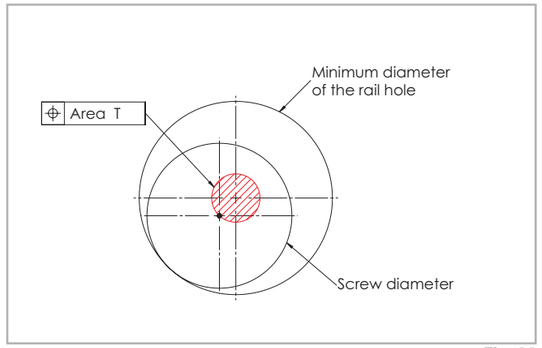

Fig. 96

Rail type	Area T [mm]
TLC18 - ULC18	∅ 1.0
TLC28 - ULC28	∅ 1.0
TLC35 - ULC35	∅ 1.5
TLC43 - ULC43 - KLC43	∅ 2.0
TLC63 - ULC63 - KLC63	∅ 1.0

Tab. 40

The minimum chamfers on the fixing threads are listed on the table below.

Size	Chamfer [mm]
18	0.5 x 45°
28	0.6 x 45°
35	0.5 x 45°
43	1 x 45°
63	0.5 x 45°

Tab. 41

Example for fixing with Torx® screws (custom design)

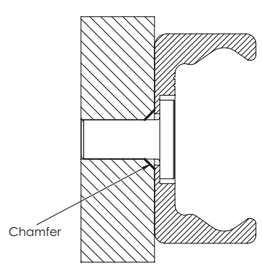

Fig. 97

Adjusting the sliders

Normally the linear guides are delivered as a system consisting of rail and adjusted sliders. If rail and slider are delivered separately or if the slider is installed in another raceway, the preload must be set again.

Setting the preload:

(1) Check the cleanliness of the tracks.

(2) Insert the slider in the rail (CSW and CDW sliders should be inserted without wipers). Slightly loosen the fixing screws of the roller pins (no marking) to be adjusted.

(3) Position the slider on one end of the rail.

(4) For the U rails there must be a thin support (e.g. set key) under the ends of the slider body to ensure the horizontal alignment of the slider in the flat raceways.

(5) Insert the included special flat wrench from the side between the rail and the slider and slip it onto the hexagon of the eccentric roller to be adjusted.

(6) By turning the flat key clockwise, the roller to be adjusted is pressed against the upper track and the slider is then without play. Avoid a preload that is too high. It generates increased wear and reduces the service life.

(7) While holding the correct position of the roller with the adjustment key, the fixing screw can be carefully tightened. The exact tightening torque will be checked later (see fig. 98 and tab. 42).

(8) Move the slider in the rail and check the preload over the entire length of the rail. It should move easily and the slider should not have play at any location of the rail.

(9) For sliders with more than 3 rollers, repeat this process with each eccentric roller. Always start with each roller to be adjusted. Make sure that all rollers have even contact to the tracks.

(10) Now tighten the fixing screws with the specified tightening torque from the table while the flat key holds the angle adjustment of the pin. A special thread in the roller pin secures the set position.

(11) Now install the wiper of the CSW- and CDW-sliders and ensure a proper lubrication of the raceways.

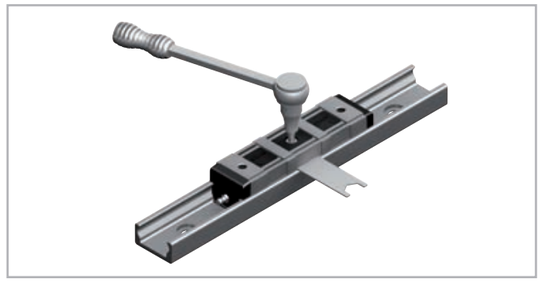

Fig. 98

Slider size	Tightening torque [Nm]
18	3
28	7
35	7
43	12
63	35

Tab. 42

Use of radial ball bearing rollers

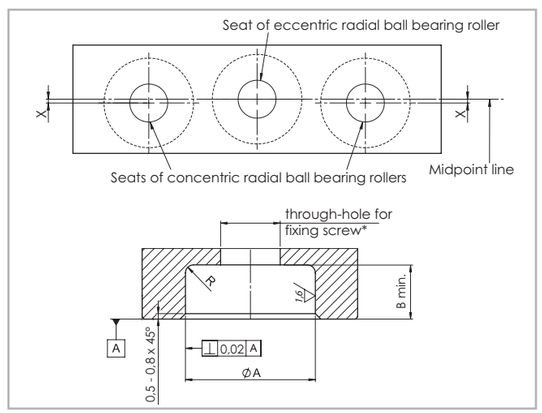

Fig. 99

If purchasing "Radial ball bearing rollers" to install on your own structure (see p. CR-29) we advise:

- Using a maximum of 2 concentric radial ball bearing rollers
- Offset the seats of the concentric radial ball bearing rollers with respect to those of the eccentric radial ball bearing rollers according to the table (tab. 43).

Slider size	X [mm]	Ø A [mm]	B min. [mm]	Radius R [mm]
18	0.40	6 + 0,025/+0,01	1,9	0,5
28	0.45	10 + 0,03/+0,01	4,0	0,5
35	0.60	12 + 0,05/+0,02	5,0	0,75
43	0.60	12 + 0,05/+0,02	5,5	1
63	0.55	18 + 0,02/-0,02	7,5	1

Tab. 43

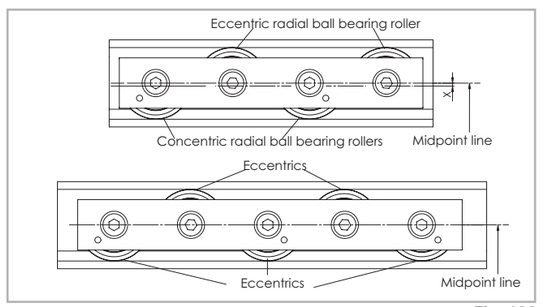

Fig. 100

Installing the single rail

The T- and K-rails can be installed in two positions relative to the external force. For axial loading of the slider (fig. 101. pos. 2), the load capacity is reduced because of the decline in contact area caused by the change in position. Therefore, the rails should be installed in such a way that the load on the rollers acts in the radial direction (fig. 101, pos. 1). The number of fixing holes in the rail in combination with screws of property class 10.9 is dimensioned in accordance with the load capacity values. For critical applications with vibrations or higher demand for rigidity, a support of the rail (fig. 101, pos. 3) is advantageous.

This reduces deformation of the sides and the load on the screws. The installation of a rail with countersunk holes requires an external reference for alignment. This reference can also be used simultaneously as rail support if required. All information in this section on alignment of the rails, refers to rails with counterbored holes. Rails with countersunk holes self-align using the specified fixing hole pattern (see pg. CR-58, fig. 95).

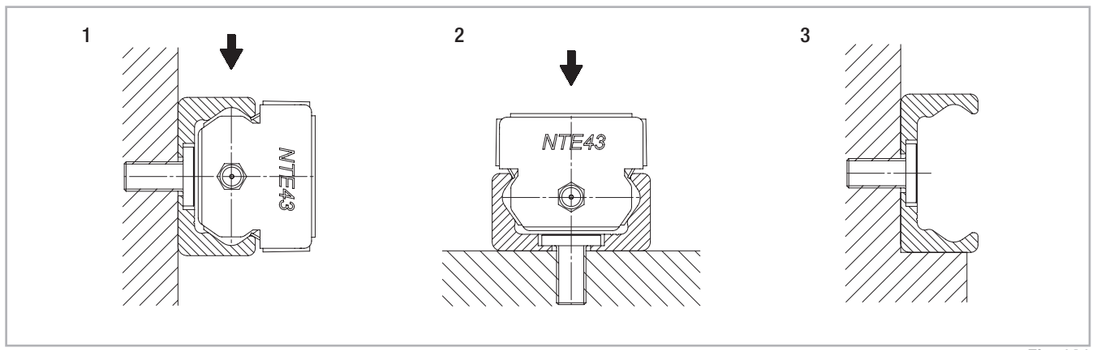

Fig. 101

Rail installation with reference surface as support

(1) Remove unevenness, burrs and dirt from the support surface.

(2) Press the rail against the support surface and insert all screws without tightening them.

(3) Start tightening the fixing screws to the specified torque on one end of the rail while continuing to hold pressure on the rail against the support surface.

Screw type	Torx® tightening torque [Nm]	Countersunk tightening torque [Nm]
M4 (T..., U... 18)	3	3
M5 (T..., U... 28)	9	6
M6 (T..., U... 35)	12	10
M8 (T..., U..., K... 43)	22	25
M8 (T..., U..., K... 63)	35	30

Tab. 44

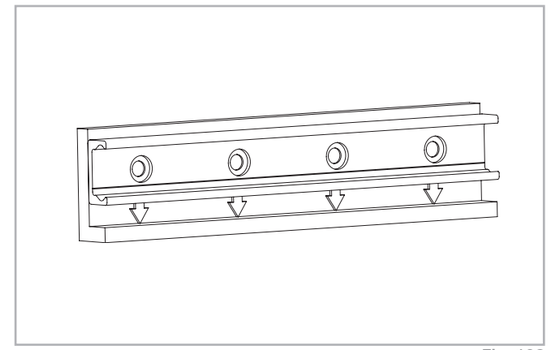

Fig. 102

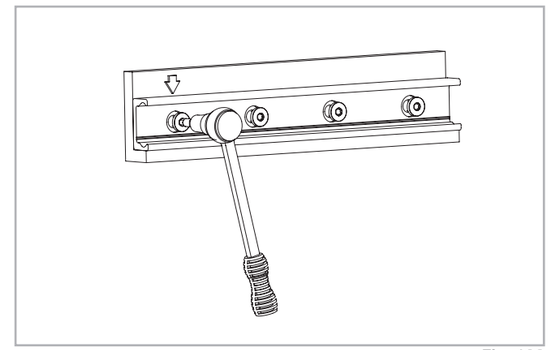

Fig. 103

C
R

Rail installation without support

(1) Carefully lay the guide rail with installed slider on the mounting surface and slightly tighten the fixing screws so that the guide rail lightly touches the mounting surface.

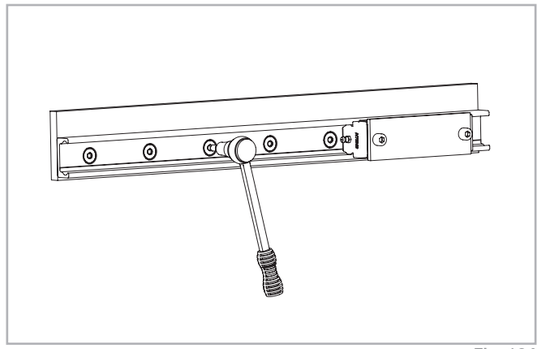

Fig. 104

(2) Install a dial indicator so that the offset of the rail to a reference line can be measured. Now position the slider in the center of the rail and set the dial indicator to zero. Move the slider back and forth between each two hole spacings and carefully align the rail. Fasten the three center screws of this area now with the the specified tightening torque, see pg. fig. 105.
(3) Now position the slider on one end of the rail and carefully align the rail to zero on the dial indicator.

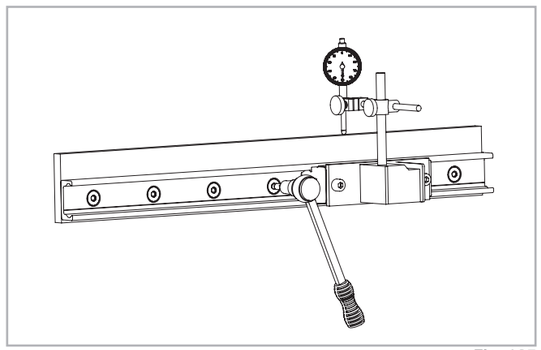

Fig. 105

(4) Begin to tighten the screws as specified while moving the slider together with the dial indicator. Make sure that it does not show any significant deflection. Repeat this procedure from the other end of the rail.

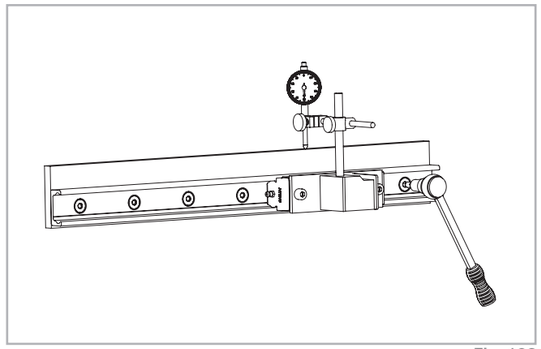

Fig. 106

Parallel installation of two rails

If two T-rails or a T+U-system are installed, the height difference of the two rails must not exceed a certain value (obtainable from the table below) in order to ensure proper guiding. These maximum values result from the maximum allowable twisting angle of the rollers in the raceways (see tab. 45). These values account for a load capacity reduction of 30% on the T-rail and must absolutely be maintained in every case.

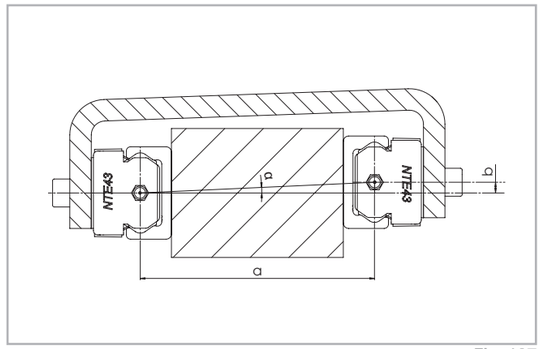

Fig. 107

Size	α
18	1 mrad (0.057°)
28	2.5 mrad (0.143°)
35	2.6 mrad (0.149°)
43	3 mrad (0.171°)
63	5 mrad (0.286°)

Tab. 45

Example:
NTE43: if a = 500 mm; b= a*tanα = 1.5 mm

When using two T-rails, the maximum parallelism deviation must not be exceeded (see tab. 46). Otherwise stresses can occur, which can result in a reduction in load capacity and service life.

Rail size	K1	K2
18	0.03	0.02
28	0.04	0.03
35	0.04	0.03
43	0.05	0.04
63	0.06	0.05

Tab. 46

Note: For parallelism problems, it is recommended to use a T+U or K+U system, since these combinations compensate for inaccuracies (see pg. CR-40, or CR-42).

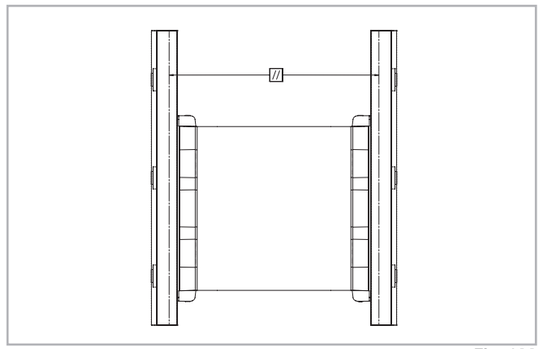

Fig. 108

Parallel installation of two T-rails

(1) Clean chips and dirt from the prepared mounting surfaces and fasten the first rail as described in the section on installation of a single rail.
(2) Fasten the second rail on the ends and the center. Tighten the screws in Position A and measure the distance between the raceways of the two rails.

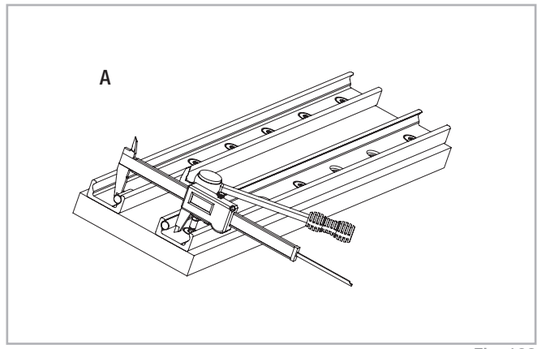

Fig. 109

(3) Fasten the rail in Position B so that the distance between the raceways does not exceed the measured values in Position A while maintaining the tolerances (see pg. CR-63, tab. 46) for parallel rail installation.

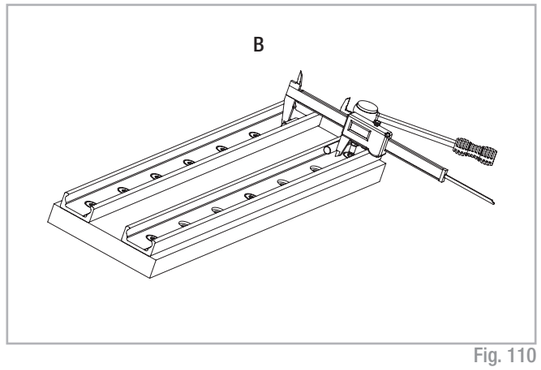

Fig. 110

(4) Fasten the screw in Position C so that the distance of the raceways is as close to an average between the two values from A and B as possible.
(5) Fasten all other screws and check the specified tightening torque of all fixing screws (see pg. CR-61, tab. 44).

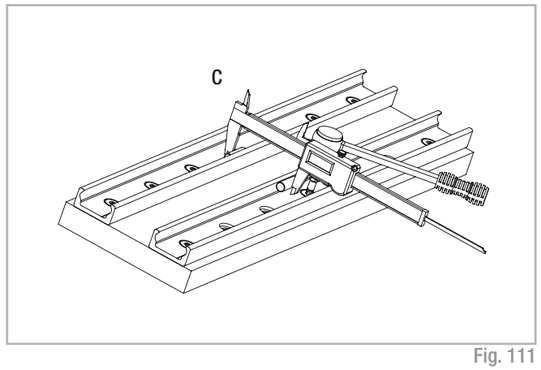

Fig. 111

Installation of the T+U- or the K+U-system

When using a two-track parallel linear guide we recommend the use of a fixed bearing / compensating bearing system: The combination of T+U-rails for compensation of deviations in parallelism or the K+U-system to compensate for deviations in parallelism in two planes.

Installation steps

(1) For a fixed bearing / compensating bearing system the fixed bearing rail is always installed first. This is then used as a reference for the compensating bearing rail.
Then proceed as described in the section on installation of a single rail (see pg. CR-60).
(2) Install the compensating bearing rail and only tighten the fixing screws slightly.
(3) Insert the sliders in the rails and install the element to be moved, without tightening its screws.
(4) Insert the element in the center of the rails and tighten it with the correct tightening torque (see pg. CR-59, tab. 42).

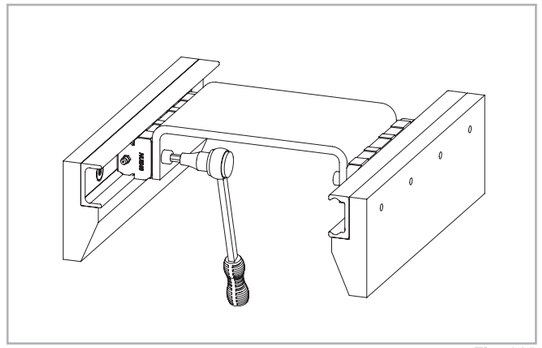

Fig. 112

(5) Tighten the center rail fixing screws to the specified torque (see fig. 113).

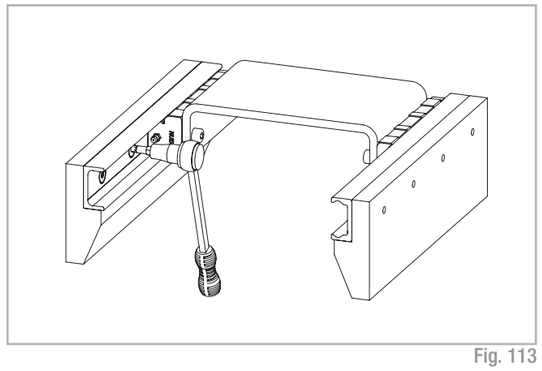

Fig. 113

(6) Move the element to one end of the rail and start tightening the rest of the screws in the direction away from the slider.

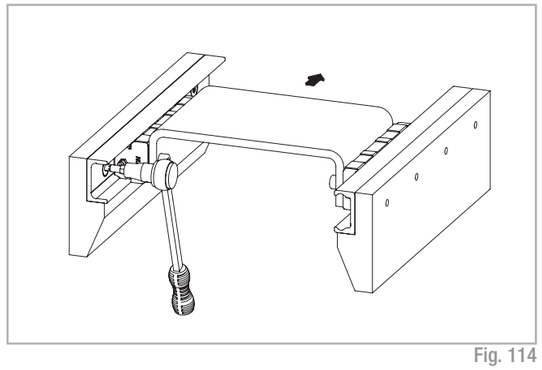

Fig. 114

Joined Rails

If long guide rails are required, two or more rails can be joined to the desired length. When putting guide rails together, be sure that the register marks shown in fig. 115 are positioned correctly.
These are fabricated asymmetric for parallel application of joined guide rails, unless otherwise specified.

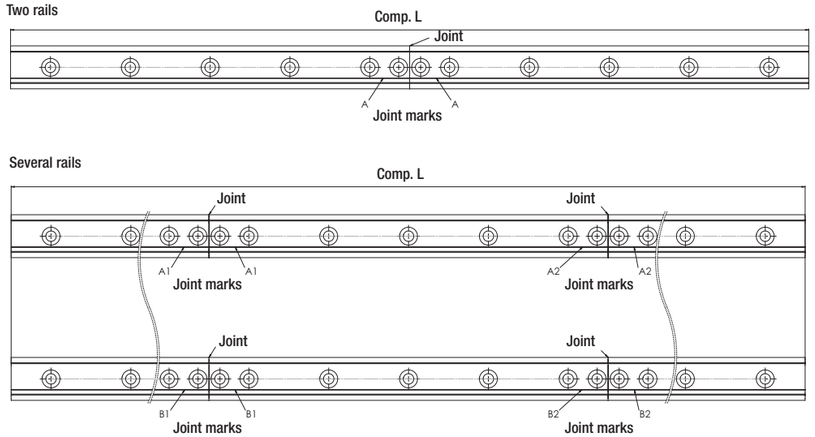

Fig. 115

General information

The maximum available rail length in one piece is indicated in table 7 on page CR-16. Longer lengths are achieved by joining two or more rails (joined rails).
Rollon then machines the rail ends at a right angle to the impact surfaces and marks them. Additional fixing screws are included with the delivery, which ensure a problem-free transition of the slider over the joints, if the following installation procedures are followed. Two additional threaded holes (see fig. 116) are required in the load-bearing structure. The included end fixing screws correspond to the installation screws for the rails for cylindrical counterbores (see pg. CR-58).
The alignment fixture for aligning the rail joint can be ordered using the designation given in the table (see pg. CR-30, tab. 19 and 20).

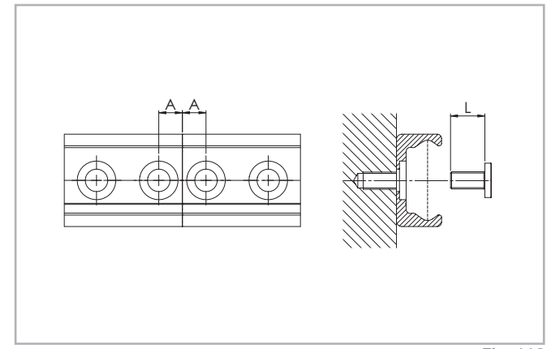

Fig. 116

Rail type	A [mm]	Threaded hole (load-bearing structure)	Screw type	L [mm]	Alignment fixture
T..., U...18	7	M4	see pg. CR-31	8	AT18
T..., U...28	8	M5		10	AT28
T..., U...35	10	M6		13	AT35
T..., U...43	11	M8		16	AT43
T..., U...63	8	M8		20	AT63
K...43	11	M8		16	AK43
K...63	8	M8		20	AK63

Tab. 47

Installation of joined rails

After the fixing holes for the rails are made in the load-bearing structure, the joined rails can be installed according to the following procedure:
(1) Fix the individual rails on the mounting surface by tightening all screws except for each last one on the rail joint.
(2) Install the end fixing screws without tightening them (see fig. 117).

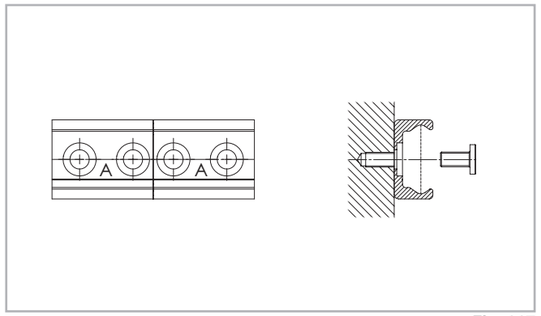

Fig. 117

(3) Place the alignment fixture on the rail joint and tighten both set screws uniformly, until the raceways are aligned (see fig. 118).
(4) After the previous step (3) it must be checked if both rail backs lie evenly on the mounting surface. If a gap has formed there, this must be shimmed.

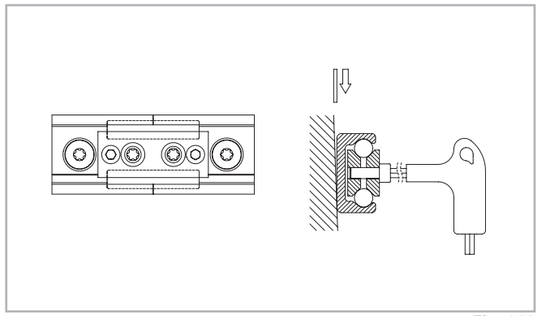

Fig. 118

(5) The bottom of the rails should be supported in the area of the transition. Here a possible existing gap must be looked for, which must be closed if necessary for correct support of the rail ends by shims.

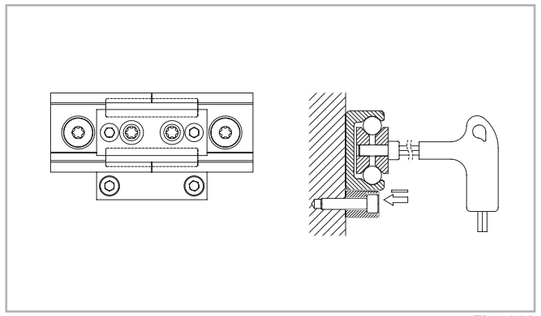

Fig. 119

(6) Insert the key through the holes in the alignment fixture and tighten the screws on the rail ends.
(7) For rails with 90° countersunk holes, tighten the remaining screws starting from the rail joint in the direction of the rail center. For rails with cylindrical counter-sunk holes, first adjust the rail to an external reference, then proceed as described above.
(8) Remove the alignment fixture from the rail.

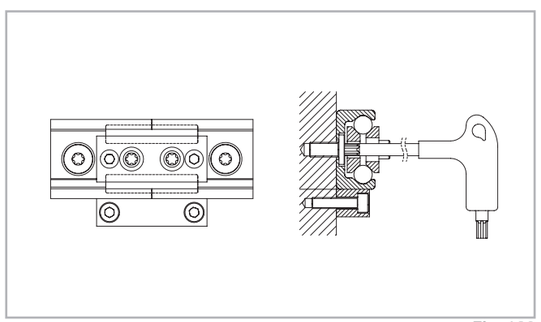

Fig. 120

Ordering key

Rail / slider system

TLC	4560	/2/	CD	W	28	-125	-2Z	-B	-NIC
									Expanded surface protection if deviation from Standard ISO 2081 *see pg. CR-57*
								Configuration *depending on type of slider* *see pgs. CR-20 and CR-23*	
							Roller seal *see pg. CR-29*		
						Slider length Dimension A *see pg. CR-16, tab. 8-11*			
					Size *see pg. CR-16*				
				Wiper optional *see pg. CR-30, fig. 43*					
			Slider type *see pg. CR-16*						
		Number of sliders in one rail							
	Rail length in mm *see pg. CR-15, tab. 7*								
Rail type *see pg. CR-12*									

Ordering example: TLC-04560/2/CDW28-125-2Z-B-NIC
Rail composition: 1x3280+1x1280 (only for joint processed rails)
Hole pattern: 40-40x80-40//40-15x80-40 (please always specify the hole pattern separately)
Notes on ordering: The rail length codes are always 5 digits, the slider length codes are always 3 digits; use zeroes as a prefix when lengths are shorter

Rail

TLV	-43	-5680	-NIC
			Expanded surface protection if deviation from Standard ISO 2081 *see pg. CR-57*
		Rail length in mm *see pg. CR-15, table 7*	
	Size *see pg. CR-12*		
Rail type *see pg. CR-12*			

Ordering example: TLV-43-05680-NIC
Rail composition: 1x880+2x2400 (only for joint processed rails)
Hole pattern: 40-10x80-40//40-29x80-40//40-29x80-40 (please always specify the hole pattern separately)
Notes on ordering: The rail length codes are always 5 digits; use zeroes as a prefix when lengths are shorter

Slider

CS	28	-100	-2RS	-B	-NIC
					Expanded surface protection if deviation from Standard ISO 2081 *see pg. CR-57*
				Configuration *depending on type of slider* *see pgs. CR-20 and CR-23*	
			Roller seal *see pg. CR-29*		
		Slider length Dimension A *see pg. CR-16, table 8-11*			
	Size *see pg. CR-16*				
Slider type *see pg. CR-16*					

Ordering example: CS28-100-2RS-B-NIC

Notes on ordering: The slider length codes are always 3 digits; use zeroes as a prefix when lengths are shorter

Notes on ordering: The sliders of the CS and CD series are delivered as standard without wipers. Wipers must be ordered separately if required.

Wipers

WT	28
	Size *see pg. CR-16*
Wiper type *see pg. CR-30, fig. 43*	

Ordering example: WT28

Note on orderling: Two wipers per runner are always required.

Notes

ROLLON®
BY TIMKEN

X-Rail



Product explanation

X-Rail: Corrosion resistant or zinc-plated steel linear bearings



Fig. 1

X-Rail is the product family of roller embossed guide rails for applications in which an economical price to performance ratio and high corrosion resistance are required.
X-Rail includes two sets of products: a rail with shaped raceways (0 degrees of axial play) and a rail with flat raceways (1 degree of axial play).
All products are available in stainless steel or zinc-plated steel. There are three different sizes of guide rails, and the sliders for the guide rails are available in different versions.

The most important characteristics:

- Corrosion resistant, FDA/USDA compliant materials
- Compensates for deviations in mounting structure parallelism
- Not sensitive to dirt due to internal tracks
- Wide temperature range of application
- Easy adjustment of sliders on the guide rails

Preferred areas of application of the X-Rail product family:

- Construction and machine technology
  (e.g., safety doors, washing bay accessories)
- Medical technology
  (e.g., hospital accessories, medical equipment)
- Transport (e.g., rail transport, naval, automotive industry)
- Food and beverage industry (e.g., packaging, food processing)
- Building technology
- Energy technology (e.g., industrial furnaces, boilers)

Fixed bearings (T-rails)

Fixed bearing rails are used for the main load bearing in radial and axial forces.



Fig. 2

Compensating bearings (U-rails)

Compensating bearing rails are used for load bearing of radial forces and, in combination with fixed bearing rails as support bearings for occurring moment loads.



Fig. 3

System (T+U-System)

A T and U-rail used together offers compensation for deviations in parallelism and tolerances in the mounting structure.



Fig. 4

Rollers

Concentric and eccentric radial ball bearings made of stainless or roller bearing steel are available for each slider. Roller sealing is dependent on the material: 2RS rubber seals or 2Z steel shields. All rollers are lubricated for life.



Fig. 5

Technical data

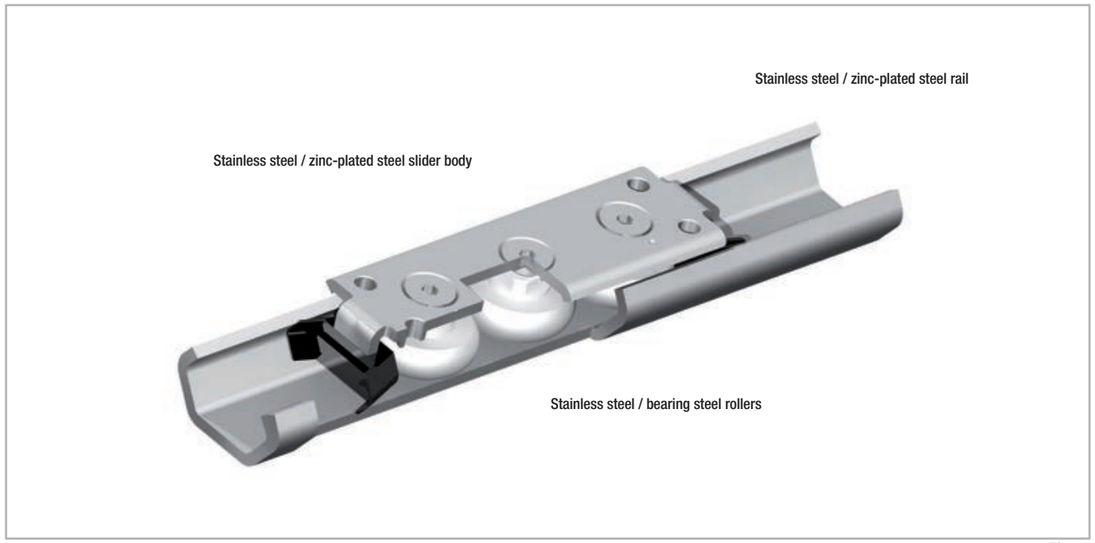

Fig. 6

Performance characteristics:

- Available sizes: 20, 30, 45
- Max. slider operating speeds in the linear bearing rails: 1.5 m/s (59 in/s) (depending on application)
- Max. acceleration: 2 m/s² (78 in/s²) (depending on application)
- Max. traverse: 3,060 mm (120 in) (depending on size)
- Max. radial load capacity: 1,740 N (per slider)
- Temperature range for stainless steel rails: -20 °C to +100 °C (-4 °F to +212 °F), or steel rails: -20 °C to +120 °C (-4 °F to +248 °F)
- Available rail lengths from 160 mm to 3,120 mm (6.3 in to 122 in) in 80-mm increments (3.15 in)
- Rollers lubricated for life
- Roller seal/shield:
  CEX... Sliders => 2RS (splashproof seal),
  CES... Sliders => 2Z (dust cover seal)
- Material: Stainless steel rails TEX... / UEX... 1.4404 (AISI 316L), Steel rails TES... / UES... zinc-plated ISO 2081
- Material rollers: Carbon steel for TES/UES, Stainless steel AISI440 for TEX/UEX rails

Remarks:

- The sliders are equipped with rollers that are in alternating contact with both sides of the raceway. Markings on the body around the outer roller pins indicate the correct arrangement of the rollers to the external load.
  Important note: Both outside rollers carry the radial load.
- With a simple adjustment of the eccentric roller, clearance or the desired preload can be set on the rail and slider.
- Sliders of Version 1 (with compact body) come standard with plastic wipers for cleaning the raceways.
- Wipers for sliders of Versions 2 and 3 on request (see pg. XR-6 and XR-7).
- We do not recommend combining (stringing together) the rails.
- Recommended fixing screws according to ISO 7380 with low head height or TORX® screws on request.
- It cannot be used in applications with high number of cycles. For further information, please contact Rollon Technical Department.

Load capacities

Fixed bearings

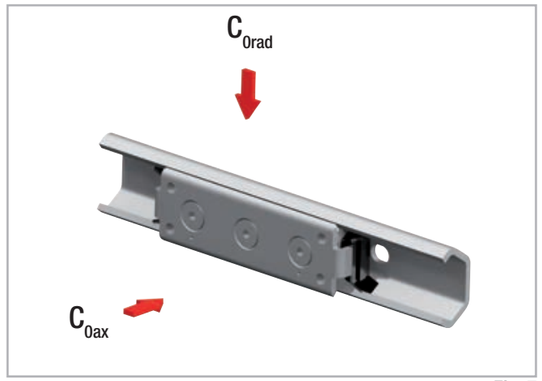

Fig. 7

Configuration	C_{0rad} [N]	C_{0ax} [N]
TEX-20 – CEX20	300	170
TEX-30 – CEX30	800	400
TEX-45 – CEX45	1600	860
TES-20 – CES20	326	185
TES-30 – CES30	870	435
TES-45 – CES45	1740	935

Resulting moment loads must be absorbed through the use of two sliders

Tab. 1

Compensating bearings

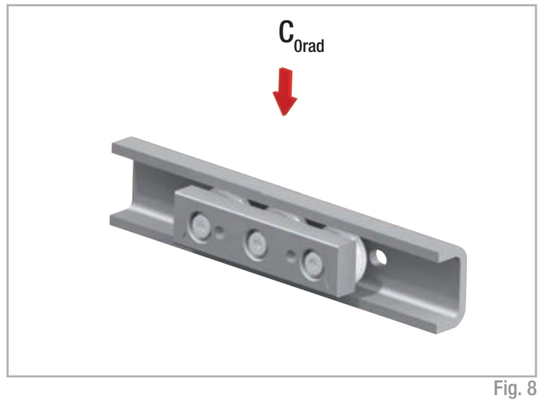

Fig. 8

Configuration	C_{0rad} [N]
UEX-20 – CEXU20	300
UEX-30 – CEXU30	800
UEX-45 – CEXU45	1600
UES-20 – CESU20	326
UES-30 – CESU30	870
UES-45 – CESU45	1740

Tab. 2

Product dimensions

Fixed rails

Rail (TEX = stainless steel / TES = zinc-plated steel)

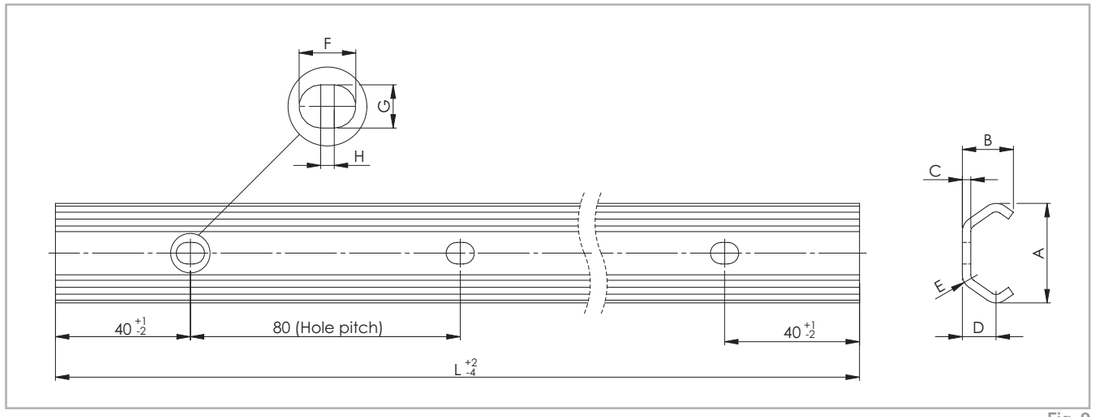

Fig. 9

Rail type	Size	A [mm]	B [mm]	C [mm]	D [mm]	E [mm]	F [mm]	G [mm]	H [mm]	Holes for screws	Weight [kg/m]
TEX	20	19.2	10	2	7	3	7	4.5	2	M4	0.47
TES	30	29.5	15	2.5	10	4.5	8.4	6.4	2	M5	0.90
	45	46.4	24	4	15.5	6.5	11	9	2	M8	2.29

Tab. 3

Rail type	Standard length L [mm]
TEX TES	160 - 240 - 320 - 400 - 480 - 560 - 640 - 720 - 800 - 880 - 960 - **1040** - 1120 - 1200 - 1280 - 1360 - 1440 - 1520 - 1600 - 1680 - 1760 - 1840 - 1920 - 2000 - **2080** - 2160 - 2240 - 2320 - 2400 - 2480 - 2560 - 2640 - 2720 - 2800 - 2880 - 2960 - 3040 - **3120**

Tab. 4

Please specify hole pattern separately
Special lengths or pitches available upon request, please contact the sales department
The highlighted rail lenghts are available from stock

Slider (CEX = stainless steel / CES = zinc-plated steel)

Version 1 (with compact body for fixed rails)

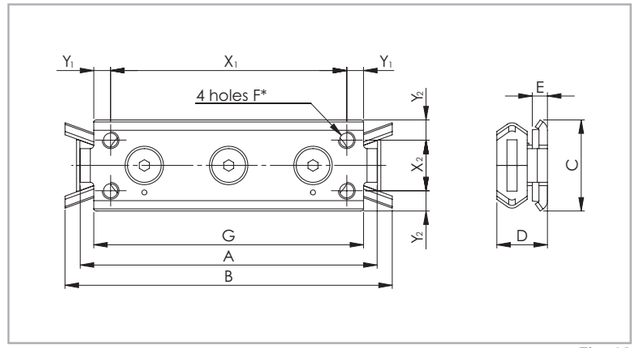

* For size 20: 2 M5 holes on the centreline with distance X_1

Fig. 10

Slider type	Size	A [mm]	B [mm]	C [mm]	D [mm]	E [mm]	F	G [mm]	X_1 [mm]	Y_1 [mm]	X_2 [mm]	Y_2 [mm]	Weight [kg]
CEX20-80 CES20-80	20	80	90	18	11.5	5.5	M5	71	60	5,5	-	9	0.05
CEX30-88 CES30-88	30	88	97	27	15	4.5	M5	80	70	5	15	6	0.11
CEX45-150 CES45-150	45	150	160	40	22	4	M6	135	120	7.5	23	8.5	0.40

Tab. 5

Version 2 (with solid body for fixed rails)

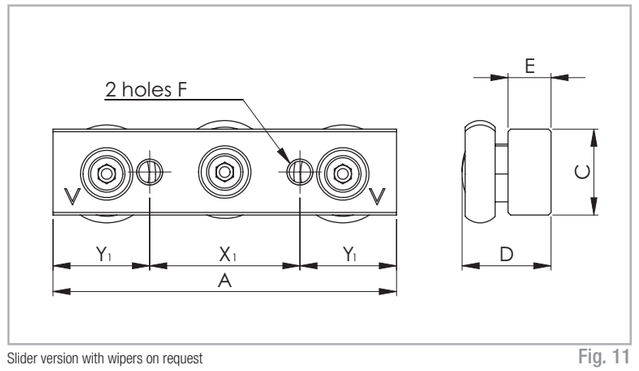

Slider version with wipers on request

Fig. 11

Slider type	Size	A [mm]	C [mm]	D [mm]	E [mm]	F	X_1 [mm]	Y_1 [mm]	Weight [kg]
CEX20-60 CES20-60	20	60	10	13	6	M5	20	20	0.04
CEX30-80 CES30-80	30	80	20	20.7	10	M6	35	22.5	0.17
CEX45-120 CES45-120	45	120	25	28.9	12	M8	55	32.5	0.47

Tab. 6

Compensating rails

Rail (UEX = stainless steel / UES = zinc-plated steel)

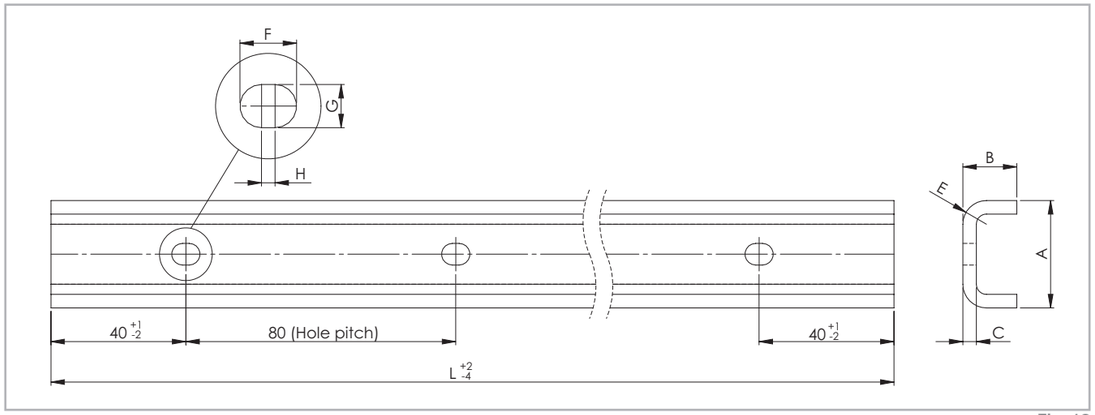

Fig. 12

Rail type	Size	A [mm]	B [mm]	C [mm]	E [mm]	F [mm]	G [mm]	H [mm]	Holes for screws	Weight [kg/m]
UEX UES	20	20.5	11	3	5.5	7	4.5	2	M4	0.77
	30	31.8	16	4	7	8.4	6.4	2	M5	1.39
UES	45	44.8	24.5	4.5	9.5	11	9	2	M8	2.79
UEX	45	43.8	24.5	4	9.5	11	9	2	M8	2.48

Tab. 7

Rail type	Standard length L [mm]
UEX UES	160 - 240 - 320 - 400 - 480 - 560 - 640 - 720 - 800 - 880 - 960 - **1040** - 1120 - 1200 - 1280 - 1360 - 1440 - 1520 - 1600 - 1680 - 1760 - 1840 - 1920 - 2000 - **2080** - 2160 - 2240 - 2320 - 2400 - 2480 - 2560 - 2640 - 2720 - 2800 - 2880 - 2960 - 3040 - **3120**

Tab. 8

Please specify hole pattern separately
Special lengths or pitches available upon request, please contact the sales department
The highlighted rail lenghts are available from stock

Slider (CEXU = stainless steel / CESU = zinc-plated steel)

Version 3 (with solid body for compensating rail)

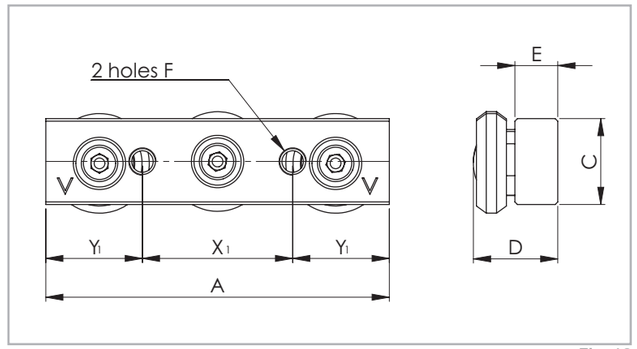

Slider version with wipers on request

Fig. 13

Slider type	Size	A [mm]	C [mm]	D [mm]	E [mm]	F [mm]	X_1 [mm]	Y_1 [mm]	Weight [kg]
CEXU20-60 CESU20-60	20	60	10	11.85	6	M5	20	20	0.04
CEXU30-80 CESU30-80	30	80	20	19.9	10	M6	35	22.5	0.16
CEXU45-120 CESU45-120	45	120	25	26.4	12	M8	55	32.5	0.45

Tab. 9

Mounted sliders and rails

Fixed rails

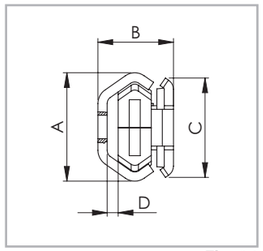

Fig. 14

Version 1

(Slider with compact body)

Configuration	A [mm]	B [mm]	C [mm]	D [mm]
TEX-20 – CEX20-80 TES-20 – CES20-80	19.2	16	18	2.5
TEX-30 – CEX30-88 TES-30 – CES30-88	29.5	20.5	27	3.5
TEX-45 – CEX45-150 TES-45 – CES45-150	46.4	31	40	5

Tab. 10

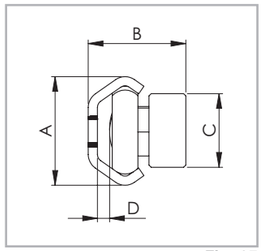

Fig. 15

Version 2

(Slider with solid body)

Configuration	A [mm]	B [mm]	C [mm]	D [mm]
TEX-20 – CEX20-60 TES-20 – CES20-60	19.2	17.8	10	2.6
TEX-30 – CEX30-80 TES-30 – CES30-80	29.5	26.5	20	3.3
TEX-45 – CEX45-120 TES-45 – CES45-120	46.4	38	25	5.1

Tab. 11

Compensating rails

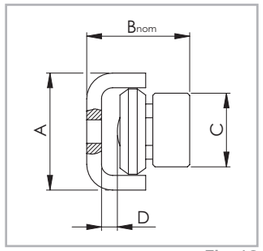

Fig. 16

Version 3

(Slider with solid body)

Configuration	A [mm]	B_{nom} [mm]	C [mm]	D [mm]
UEX-20 – CEXU20-60 UES-20 – CESU20-60	20.5	18.25 ± 0.6	10	3.4
UEX-30 – CEXU30-80 UES-30 – CESU30-80	31.8	27.95 ± 1.0	20	4.05
UEX-45 – CEXU45-120 UES-45 – CESU45-120	44.8	37.25 ± 1.75	25	6.35

Tab. 12

Accessories

Rollers

Version 1

(Slider with compact body for fixed rails)

CRPNX / CRPN

Concentric rollers

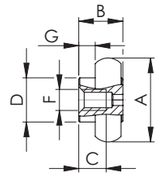

CRPAX / CRPA

Eccentric rollers

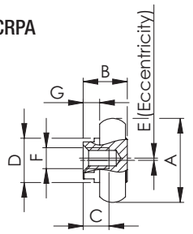

Fig. 17

Roller type	for slider	A [mm]	B [mm]	C [mm]	D [mm]	E [mm]	F	G [mm]	Weight [kg]
CRPNX20-2RS	CEX20-80	14	8.5	6	8	-	M4	4.0	0.006
CRPN20-2Z	CES20-80								
CRPAX20-2RS	CEX20-80					0.5			
CRPA20-2Z	CES20-80								
CRPNX30-2RS	CEX30-88	22.8	12	7	12	-	M5	4.5	0.02
CRPN30-2Z	CES30-88								
CRPAX30-2RS	CEX30-88					0.6			
CRPA30-2Z	CES30-88								
CRPNX45-2RS	CEX45-150	35.6	18	12	16	-	M6	6.0	0.068
CRPN45-2Z	CES45-150								
CRPAX45-2RS	CEX45-150					0.8			
CRPA45-2Z	CES45-150								

Load rate per roller: radial 50 %, axial 33 % of the given slider load rate
2RS (splashproof seal for CEX slider), 2Z (dust cover seal for CES slider)

Tab. 13

Version 2

(Slider with solid body for fixed rails)

CRNX / CRN

Concentric rollers

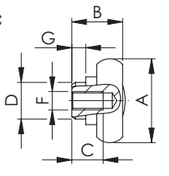

CRAX / CRA

Eccentric rollers

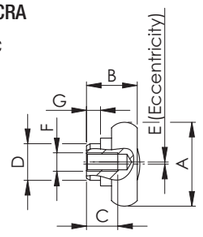

Fig. 18

Roller type	for slider	A [mm]	B [mm]	C [mm]	D [mm]	E [mm]	F	G [mm]	Weight [kg]
CRNX20-2RS	CEX20-60	14	8.7	6	6	-	M4	1.8	0.006
CRN20-2Z	CES20-60								
CRAX20-2RS	CEX20-60					0.5			
CRA20-2Z	CES20-60								
CRNX30-2RS	CEX30-80	22.8	14	9	10	-	M5	3.8	0.022
CRN30-2Z	CES30-80								
CRAX30-2RS	CEX30-80					0.6			
CRA30-2Z	CES30-80								
CRNX45-2RS	CEX45-120	35.6	20.5	14.5	12	-	M6	4.5	0.07
CRN45-2Z	CES45-120								
CRAX45-2RS	CEX45-120					0.8			
CRA45-2Z	CES45-120								

Load rate per roller: radial 50 %, axial 33 % of the given slider load rate
2RS (splashproof seal for CEX slider), 2Z (dust cover seal for CES slider)

Tab. 14

Version 3

(Slider with solid body for compensating rails)

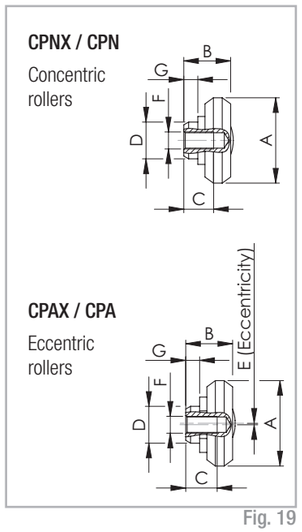

Fig. 19

Roller type	for slider	A [mm]	B [mm]	C [mm]	D [mm]	E [mm]	F	G [mm]	Weight [kg]
CPNX20-2RS	CEXU20-60	14	7.35	5.5	6	-	M4	1.8	0.004
CPN20-2Z	CESU20-60								
CPAX20-2RS	CEXU20-60					0.4			
CPA20-2Z	CESU20-60								
CPNX30-2RS	CEXU30-80	23.2	13	7	10	-	M5	3.8	0.018
CPN30-2Z	CESU30-80								
CPAX30-2RS	CEXU30-80					0.6			
CPA30-2Z	CESU30-80								
CPNX45-2RS	CEXU45-120	35	18	12	12	-	M6	4.5	0.06
CPN45-2Z	CESU45-120								
CPAX45-2RS	CEXU45-120					0.8			
CPA45-2Z	CESU45-120								

Load rate per roller: radial 50 % of given slider load rate
2RS (splashproof seal for CEX slider), 2Z (dust cover seal for CES slider)

Tab. 15

Fixing screws

We recommend fixing screws according to ISO 7380 with low head height or TORX® screws (see fig. 20) on request.

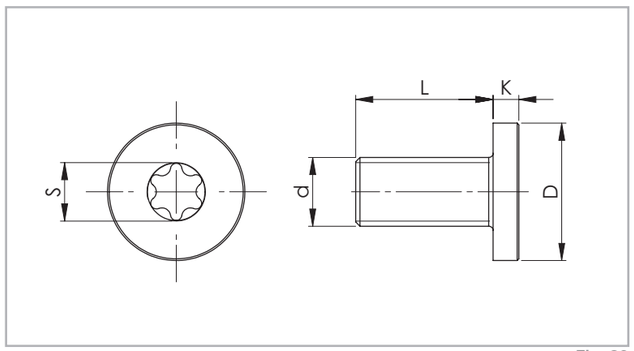

Fig. 20

Rail size	Screw type	d	D [mm]	L [mm]	K [mm]	S	Tightening torque [Nm]
20	M4 x 8	M4 x 0.7	8	8	2	T20	3
30	M5 x 10	M5 x 0.8	10	10	2	T25	9
45	M8 x 16	M8 x 1.25	16	16	3	T40	22

Tab. 16

Technical instructions

Lubrication

All radial ball bearing rollers in the X-Rail series are lubricated for life. It is advisable to lubricate the raceways with specific bearing grease. The interval between lubrication treatments depends mainly on environmental conditions, bearing speed and temperature.

Under normal conditions, it is advisable to lubricate locally after 100 km of use or after six months of service. In case of critical applications, lubrication treatments should be more frequent. Before lubricating, remember to clean the raceway surfaces carefully. We advise using a lithium grease of medium consistency for rolling-element bearings.

Different lubricants are available on request for special applications:

- FDA-approved lubricant for use in the food industry
- specific lubricant for clean rooms
- specific lubricant for the marine technology sector
- specific lubricant for high and low temperatures

For specific information, contact Rollon technical support.

Under normal conditions, correct lubrication:

- reduces friction
- reduces wear
- reduces stress on contact surfaces due to elastic deformation
- reduces noise during operation
- increases the regularity of the rolling movement

T+U-System

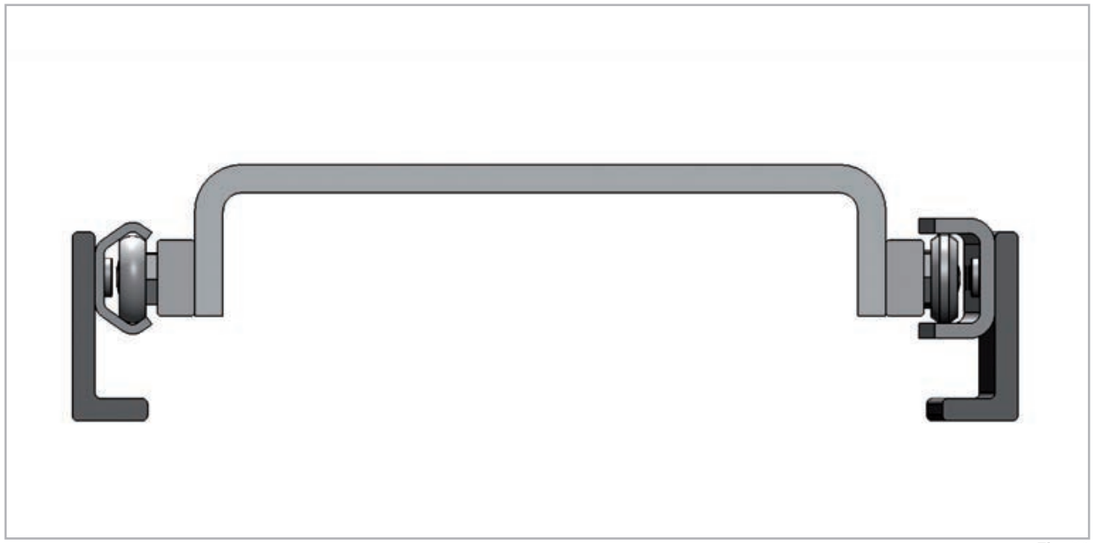

Fig. 21

Solves axial deviations in parallelism

Mounting two linear bearing rails in a parallel manner is always important but rarely easy. Distortions in axial alignment can drastically reduce the life of the rails. These distortions can bind and overload sliders. Rollon offers an outstanding solution for the alignment of dual track carriages. Using shaped and flat raceways it is possible to avoid axial deviation in parallelism of the mounting surfaces without additional modifications of those surfaces. T+U rails easily address these alignment issues to create an economical parallel rail system.

In a T+U-System, the slider in the T rail carries axial and radial loads and guides the movement of the U, which has lateral freedom.

U rails have flat parallel raceways that allow free lateral movement of the sliders. The maximum freedom a slider in the U rail can offer can be calculated using the values S_1 and S_2 (see pg. XR-14, fig. 22, tab. 19). With nominal value B_{nom} as the starting point, S_1 indicates the maximum allowed movement into the rail, while S_2 represents the maximum offset towards the outside of the rail.

If the length of the guide rail is known, the maximum allowable angle deviation of the mounting surface (see pg. XR-14, fig. 23) can be obtained. In this case the slide in the U rail has the freedom to travel from the innermost position S_1 to the outermost position S_2.

Maximum offset

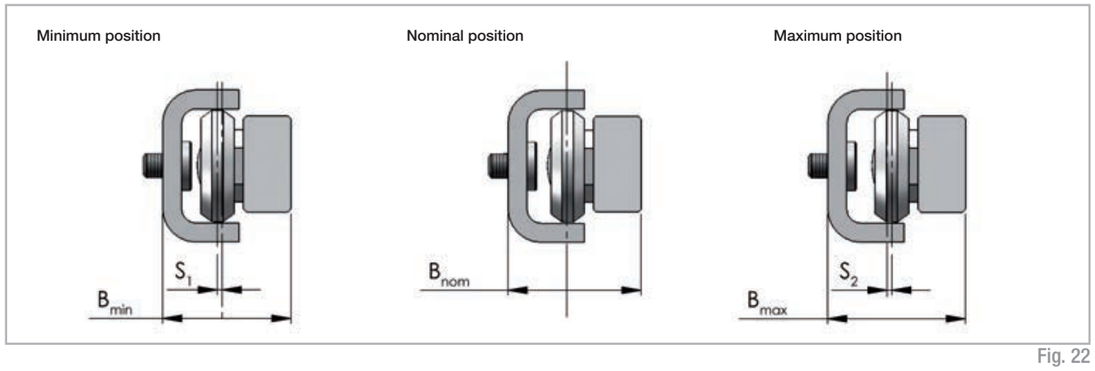

Fig. 22

Slider type (Version 3 with solid body)	S_1 [mm]	S_2 [mm]	B_{min} [mm]	B_{nom} [mm]	B_{max} [mm]
CEXU.../CESU20-60	0.6	0.6	17.65	18.25	18.85
CEXU.../CESU30-80	1	1	26.95	27.95	28.95
CEXU.../CESU45-120	1.75	1.75	35.50	37.25	39

Tab. 17

Guideline for the maximum angle deviation α, achievable with the longest guide rail

$$\alpha = \arctan \frac{S^*}{L}$$

S^* = sum of S_1 and S_2
L = length of the rail

Fig. 23

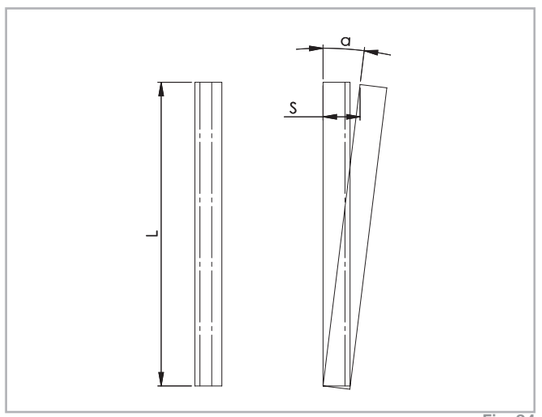

Fig. 24

Size	Rail length [mm]	Offset S* [mm]	Angle α [°]
20	3120	1.2	0.022
30	3120	2	0.037
45	3120	3.5	0.064

Tab. 18

Setting preload

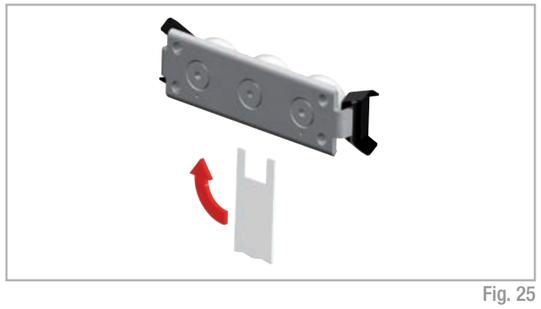

Fig. 25

Size	Tightening torque [Nm]
20	3
30	7
45	12

Tab. 19

If the product is delivered with the sliders in the rails, the sliders are already preloaded. If delivered separately, or if the sliders need to be installed in another rail, the sliders must be readjusted. In this case, follow the instructions below:

- Wipe the raceways of any dirt and debris.
- If necessary, remove existing wipers and insert the sliders into the rails. Slightly loosen the fixing screw of the center roller pin.
- Position the slider(s) at the ends of the rail.
- For the U rails there must be a thin support (e.g. set key) under the ends of the slider body to ensure the horizontal alignment of the slider in the flat raceways.
- The included special flat key is inserted from the side between the rail and the slider and inserted onto the hexagonal or square shaft of the eccentric pin to be adjusted (see fig. 25).
- By turning the flat key clockwise, the eccentric roller is pressed against the upper raceway, thereby removing clearance and setting the correct preload. During this process, absence of play is desired; avoid setting a preload that is so high that it generates high friction and reduces service life.
- Hold the roller with the adjustment key in the desired position and carefully tighten the fixing screw. The exact tightening torque will be checked later.
- Move the slider in the rail and check the preload over the entire length of the rail. It should move easily and the slider should not have play at any location of the rail.
- Tighten the fixing screw with the specified tightening torque (see tab. 19), while holding the flat key and maintaining the angle position of the roller so as to not change the preload while tightening the screw. It is recommended to use thread locking compound.
- Now re-attach the existing wipers if desired.

Use of radial ball bearing rollers

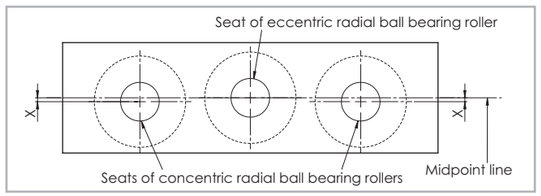

Fig. 26

Slider size	X [mm]
20	0,60
30	0,65
45	0,60

Tab. 20

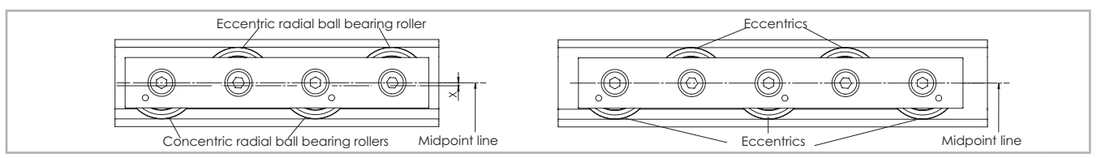

Fig. 27

If purchasing "Radial ball bearing rollers" to install on your own structure (see from p. XR-10 to XR-12) we advise:

- Using a maximum of 2 concentric radial ball bearing rollers
- Offset the seats of the concentric radial ball bearing rollers with respect to those of the eccentric radial ball bearing rollers according to the table (tab. 20).

Ordering key

Rail / slider system

TEX-	**960**	**/1/**	**CEX20-60**	**-2RS**
				Roller seal *see pg. XR-4 Performance characteristics*
			Slider type *see pg. XR-7, tab. 5 and 6/ pg. XR-9, tab. 9*	
		Number of sliders in one rail		
	Rail length in mm *see pg. XR-6, tab. 4 / pg.XR-8, tab. 8*			
Rail type *see pg. XR-6, tab. 3 / pg. XR-8, tab. 7*				

Ordering example: TEX-00960/1/CEX20-060-2RS

Hole pitch: 40-11 x 80-40

Notes on ordering: The rail length codes are always 5 digits, the slider length codes are always 3 digits; use zeroes as a prefix when lengths are shorter

Rail

TEX-	**30-**	**960**
		Rail length in mm *see pg. XR-6, tab. 4 / pg. XR-8, tab. 8*
	Size *see pg. XR-6, tab. 3 / pg. XR-8, tab. 7*	
Rail type *see pg. XR-6, tab. 5 / pg.XR-8, tab. 7*		

Ordering example: TEX-30-00960

Hole pattern: 40-11 x 80-40

Notes on ordering: The rail length codes are always 5 digits; use zeroes as a prefix when lengths are shorter

Slider

CES30-80	**-2Z**	
	Roller seal *see pg. XR-6 Performance characteristics*	
Slider type *see pg. XR-7, tab. 5 and 6/ pg. XR-9, tab. 9*		

Ordering example: CES30-080-2Z

Notes on ordering: The slider length codes are always 3 digits; use zeroes as a prefix when lengths are shorter

Accessories

Roller pins

CRPAX	**45**	**-2RS**
		Roller seal *see pg. XR-6 Performance characteristics*
	Size *see pg. XR-11, tab. 13-15*	
Roller type *see pg. XR-11, tab. 13-15*		

Ordering example: CRPAX45-2RS

Fixing screws

Rail type	Size	Ordering description
TEX / UEX	20	TORX®-screw TC 18 M4x8 NIC
	30	TORX®-screw TC 28 M5x10 NIC
	45	TORX®-screw TC 43 M8x16 NIC
TES / UES	20	TORX®-screw TC 18 M4x8
	30	TORX®-screw TC 28 M5x10
	45	TORX®-screw TC 43 M8x16

see pg. XR-12, fig. 20, tab. 16

ROLLON®
BY TIMKEN

Easyslide



Product explanation

Easyslide is a linear ball rail system (with caged ball bearings for the SN series or with recirculating ball bearings for the SNK series) with single or multiple sliders.



Fig. 1

The Easyslide series is a system of drawn steel linear rails with induction hardened raceways. The system consists of an “C” shaped linear profile rail, and one or more internal sliders with caged recirculating ball bearings.

The most important characteristics:

- Guide rails and sliders of SN series are made of cold-drawn bearing steel
- Ball cage is made of steel for the SN series
- Balls are made of hardened bearing steel
- Raceways of the guide rails and sliders are induction hardened (ground for the SNK series)
- Long service life
- With recirculating ball bearings for the SNK series

Preferred areas of application of the Easyslide product family:

- Transportation industry (e.g., exterior and interior rail and bus doors, seat adjustments, interior)
- Construction and machine technology (e.g., housings, protective covers)
- Medical technology (e.g., X-ray equipment, medical tables)
- Automotive technology
- Logistics (e.g., handling units)
- Packaging machines (e.g., beverage industry)
- Special machines

SN linear bearing, version 1, with single slider

This linear bearing consists of a guide rail and a slider that runs within the ball cage in the guide rail. High load capacities, compact cross-sections and simple and easy mounting characterize this series.



Fig. 2

SN linear bearing, version 2, with multiple independent sliders

Variant with several sliders, which each runs in its own ball cage, independent of each other, in the guide rail. Slider length and stroke for each slider can be different within one rail.



Fig. 3

SN linear bearing, version 3, with multiple synchronized sliders

Several sliders run in a common ball cage within the guide rails. The slider lengths can vary here as well and then form a total unit, which implements the corresponding stroke.



Fig. 4

SNK series linear rails with recirculating ball bearings.

The SNK series consists of a drawn steel C profile rail with hardened and ground raceways and of an internal slider with a recirculating ball bearing system. This product is extremely compact and boasts high load rating and great sliding properties.



Fig. 5

Technical data

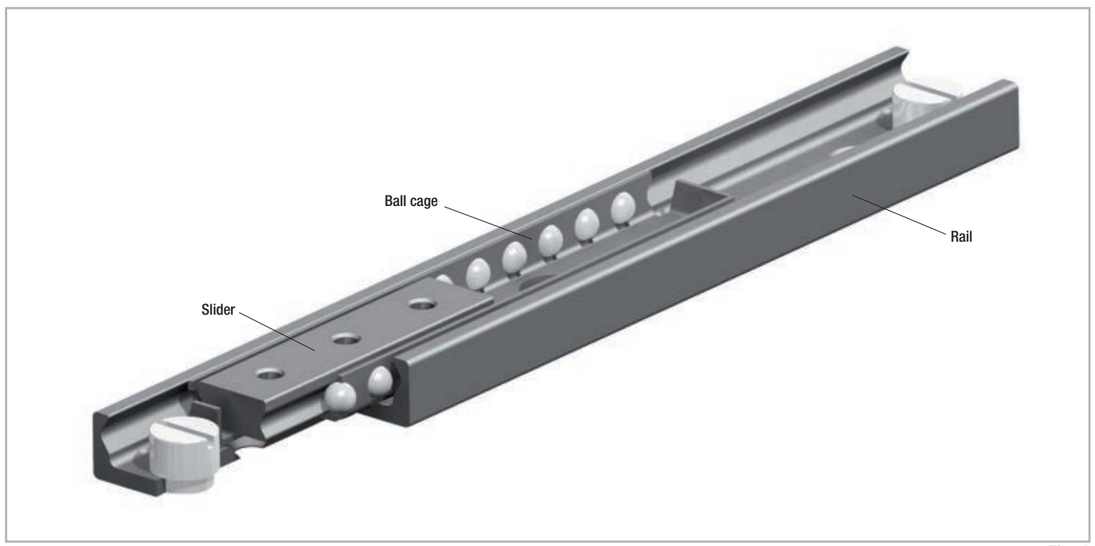

Fig. 6

Performance characteristics:

- Available sizes for SN: 22, 28, 35, 43, 63
- Sections available for the SNK series: 43
- Inductive raceways hardened and ground for the SNK series
- Rails and sliders are made of cold-drawn bearing steel
- Balls are made of hardened bearing steel
- Max. operating speed 1.5 m/s (SNK)
- Temperature range: from -20 °C to +170 °C for the SN series from -20° to 70° for the SNK series
- Electrolytic zinc-plating as per ISO 2081; increased anticorrosive protection on request (see Chapter 4, Technical instructions, pg. 16 Anticorrosive protection)
- Linear accuracy 0.1 mm/m stroke
- 2 different types of preload

Remarks:

- SN can only be horizontally mounted, high performance SNK can be horizontally and vertically mounted.
- External stops are recommended
- Fixing screws of property class 10.9 must be used for all linear bearings

Dimensions and load capacity

SN

SN linear bearing, version 1, with single slider

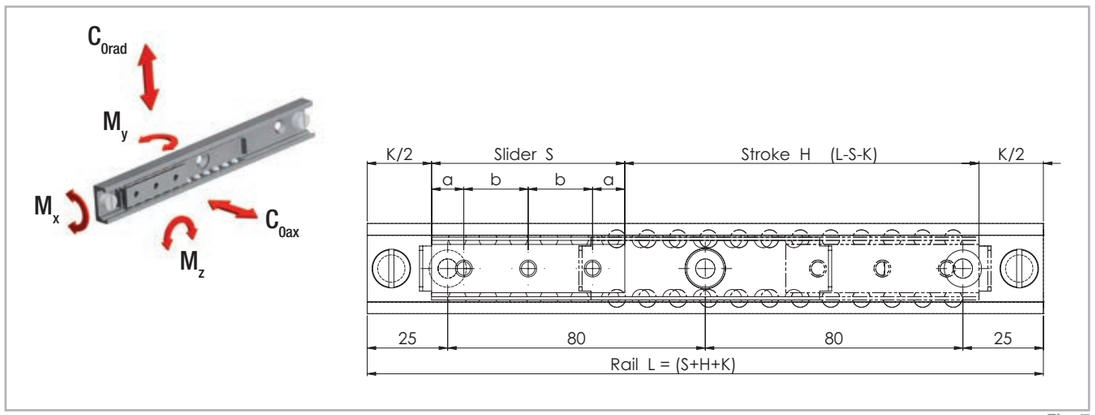

Fig. 7

To ensure that all fixing holes of the rail are accessible, S must be < L/2 - K.
To ensure proper smooth movement it is necessary that H ≤ 7S.

Type	Size	Slider								
						Load capacities and moments				
		Length S [mm]	a [mm]	b [mm]	No. of holes	C_{0rad} [N]	C_{0ax} [N]	M_x [Nm]	M_y [Nm]	M_z [Nm]
SN	22	40	10	20	2	1320	924	4.4	6	9
		60			3	1980	1386	6.7	14	20
		80			4	2640	1848	8.9	25	35
		130	25	80	2	4290	3003	14.4	65	93
		210			3	6930	4851	23.3	170	243
		290			4	9570	6699	32.2	324	463

Tab. 1

		Rail	
Type	Size	Length L [mm]	K [mm]
SN	22	130 - 210 - 290 - 370 - 450 - 530 - 610 - 690 - 770 - 850 - 930 - 1010 - 1090 - 1170	30

Tab. 2

Type	Size	Slider								
						Load capacities and moments				
		Length S [mm]	a [mm]	b [mm]	No. of holes	C_{0rad} [N]	C_{0ax} [N]	M_x [Nm]	M_y [Nm]	M_z [Nm]
SN	28	60	10	20	3	3480	2436	17.1	24	35
		80			4	4640	3248	22.7	43	62
		130	25	80	2	7540	5278	36.9	114	163
		210			3	12180	8526	59.7	298	426
		290			4	16820	11774	82.4	569	813
		370			5	21460	15022	105.1	926	1323
		450			6	26100	18270	127.9	1370	1958

Tab. 3

Type	Size	Rail	
		Length L [mm]	K [mm]
SN	28	130 - 210 - 290 - 370 - 450 - 530 - 610 - 690 - 770 - 850 - 930 - 1010 - 1090 - 1170 - 1250 - 1330 - 1410 - 1490 - 1570 -1650	40

Tab. 4

Type	Size	Slider								
						Load capacities and moments				
		Length S [mm]	a [mm]	b [mm]	No. of holes	C_{0rad} [N]	C_{0ax} [N]	M_x [Nm]	M_y [Nm]	M_z [Nm]
SN	35	130	25	80	2	9750	6825	47.2	148	211
		210			3	15750	11025	76.3	386	551
		290			4	21750	15225	105.3	736	1051
		370			5	27750	19425	134.4	1198	1711
		450			6	33750	23625	163.4	1772	2531
		530			7	39750	27825	192.5	2458	3511
		610			8	45750	32025	221.6	3256	4651

Tab. 5

Type	Size	Rail	
		Length L [mm]	K [mm]
SN	35	290 - 370 - 450 - 530 - 610 - 690 - 770 - 850 - 930 - 1010 - 1090 - 1170 - 1250 - 1330 - 1410 - 1490 - 1570 - 1650 - 1730 - 1810	50

Tab. 6

Type	Size	Slider								
						Load capacities and moments				
		Length S [mm]	a [mm]	b [mm]	No. of holes	C_{0rad} [N]	C_{0ax} [N]	M_x [Nm]	M_y [Nm]	M_z [Nm]
SN	43	130	25	80	2	13910	9737	96	211	301
		210			3	22470	15729	155.1	551	786
		290			4	31030	21721	214.1	1050	1500
		370			5	39590	27713	273.2	1709	2441
		450			6	48150	33705	332.3	2528	3611
		530			7	56710	39697	391.4	3507	5009
		610			8	65270	45689	450.4	4645	6636

Tab. 7

Type	Size	Rail	
		Length L [mm]	K [mm]
SN	43	290 - 370 - 450 - 530 - 610 - 690 - 770 - 850 - 930 - 1010 - 1090 - 1170 - 1250 -1330 - 1410 - 1490 - 1570 - 1650 - 1730 - 1810 - 1890 - 1970	50

Tab. 8

Type	Size	Slider								
						Load capacities and moments				
		Length S [mm]	a [mm]	b [mm]	No. of holes	C_{0rad} [N]	C_{0ax} [N]	M_x [Nm]	M_y [Nm]	M_z [Nm]
SN	63	130	25	80	2	26000	18200	238.8	394	563
		210			3	42000	29400	385.8	1029	1470
		290			4	58000	40600	532.8	1962	2803
		370			5	74000	51800	679.8	3194	4563
		450			6	90000	63000	826.7	4725	6750
		530			7	106000	74200	973.7	6554	9363
		610			8	122000	85400	1120.7	8682	12403

Tab. 9

Type	Size	Rail	
		Length L [mm]	K* [mm]
SN	63	610 - 690 - 770 - 850 - 930 - 1010 - 1090 - 1170 - 1250 - 1330 - 1410 - 1490 - 1570 - 1650 - 1730 - 1810 - 1890 - 1970	80

Tab. 10

* For systems of versions 2 in size 63 with two independent sliders, the K dimension changes from 80 mm to 110 mm and for each additional slider by another 30 mm

Version 2 with multiple independent sliders

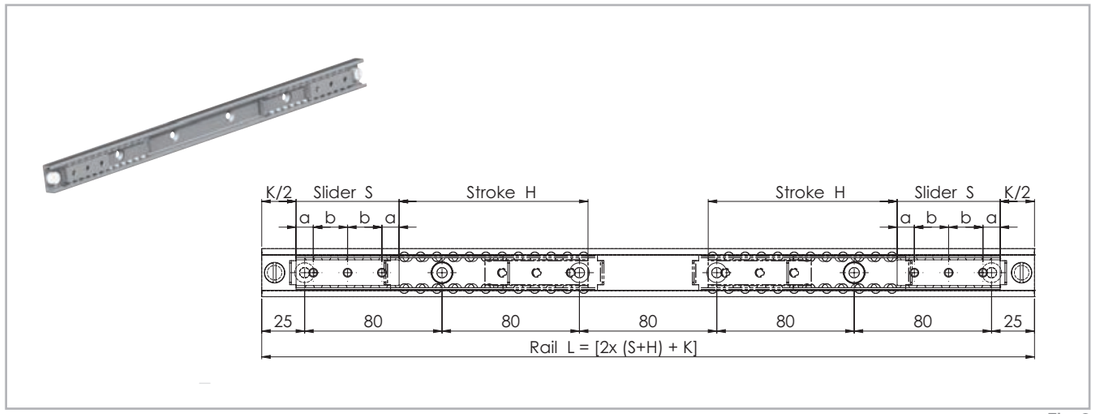

For systems of versions 2 in size 63 with two independent sliders, the K dimension changes from 80 mm to 110 mm and for each additional slider by another 30 mm

Fig. 8

Version 2 is a variant of version 1 with several independent sliders. The total load capacity is based on the number of sliders in the rail and on their lengths. The length and stroke of the individual sliders can be different.

To ensure that all fixing holes of the rail are accessible, S must be < L/2 - K.

To ensure proper smooth movement it is necessary that H ≤ 7S.

Version 3 with multiple synchronized sliders

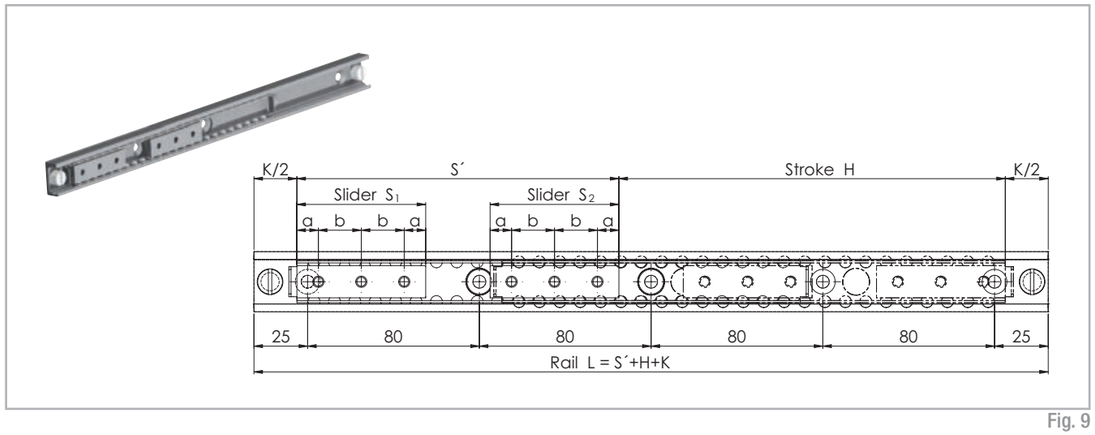

Fig. 9

Version 3 is a variant of version 1 with several synchronized sliders. The total load capacity is based on the number of sliders in the rail. The length of the individual sliders can therefore vary. To ensure that all fixing holes of the rail are accessible, S must be < L/2 - K.

To ensure proper smooth movement it is necessary that H ≤ 7S.

SN

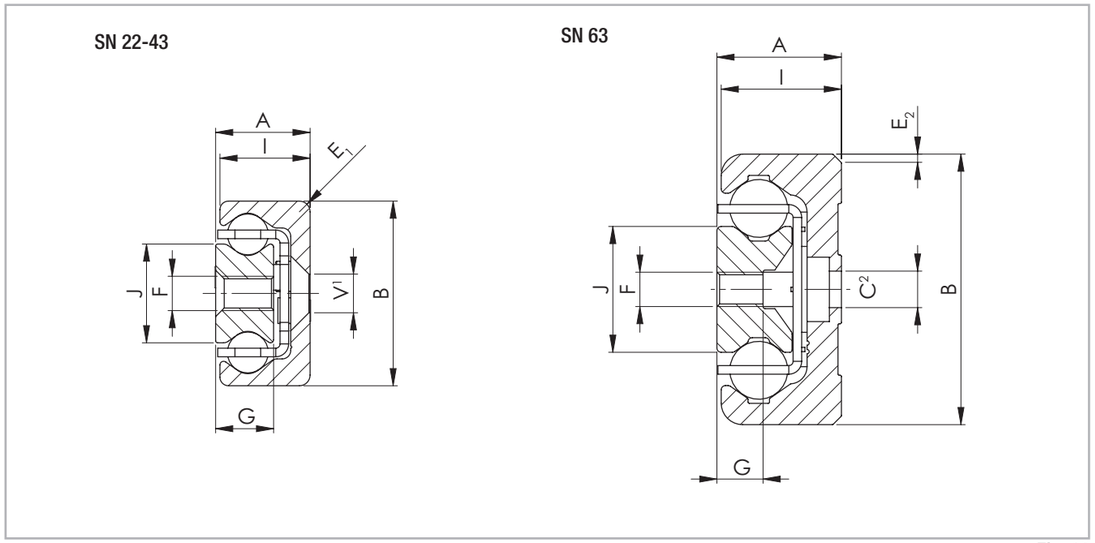

[1] Fixing holes (V) for countersunk head screws according to DIN 7991

[2] Fixing holes (C) for socket cap screws according to DIN 7984. Alternative fixing with Torx® screws in special design with low head (on request)

Fig. 10

Type	Size	Cross-section										Rail weight [kg/m]	Slider weight [kg/m]
		A [mm]	B [mm]	I [mm]	J [mm]	G [mm]	E_1 [mm]	E_2 [°]	V	C	F		
SN	22	11	22	10.25	11.3	6.5	3	-	M4	-	M4	0.7	1
	28	13	28	12.25	15	7.5	1	-	M5	-	M5	1	1.5
	35	17	35	16	15.8	10	2	-	M6	-	M6	1.8	2.5
	43	22	43	21	23	13.5	2.5	-	M8	-	M8	2.6	5
	63	29	63	28	29.3	10.5	-	2 x 45	-	M8	M8	6.1	6.9

Tab. 11

SNK

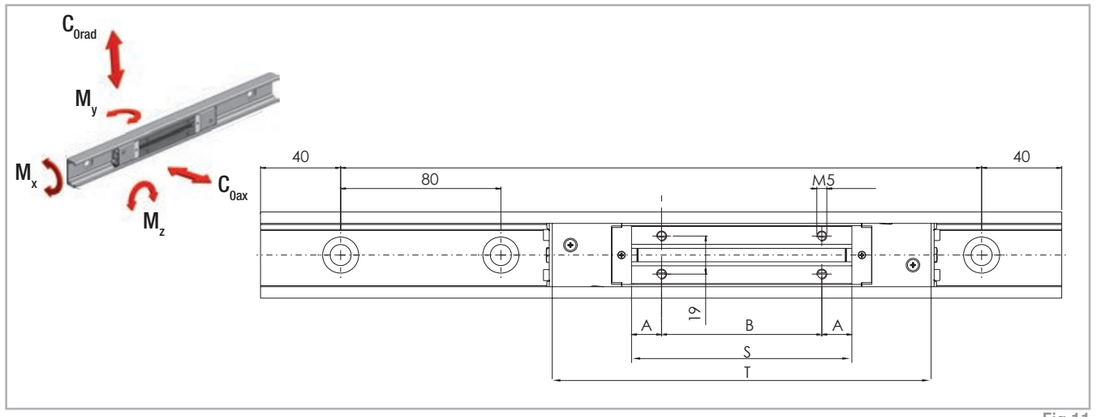

Fig.11

Type	Size	Slider									
		Load capacities and moments									
		Length S [mm]	Length T [mm]	A [mm]	B [mm]	N° of holes	C_{0rad} [N]	C_{0ax} [N]	M_x [Nm]	M_y [Nm]	M_z [Nm]
SNK	43	110	198	15	80	4	7842	5489	75	95	136
		150	238	15	60	6	10858	7600	105	182	261

Tab. 12

		Rail
Type	Size	Length L [mm]
TSC/TSV	43	320-400-480-560-640-720-800-880-960-1040-1120-1200 -1280-1360-1440-1520-1600-1680-1760-1840-1920-2000

For greater lengths, see the paragraph “SNK Jointed Rails on p. ES-18”

Tab. 13

SNK

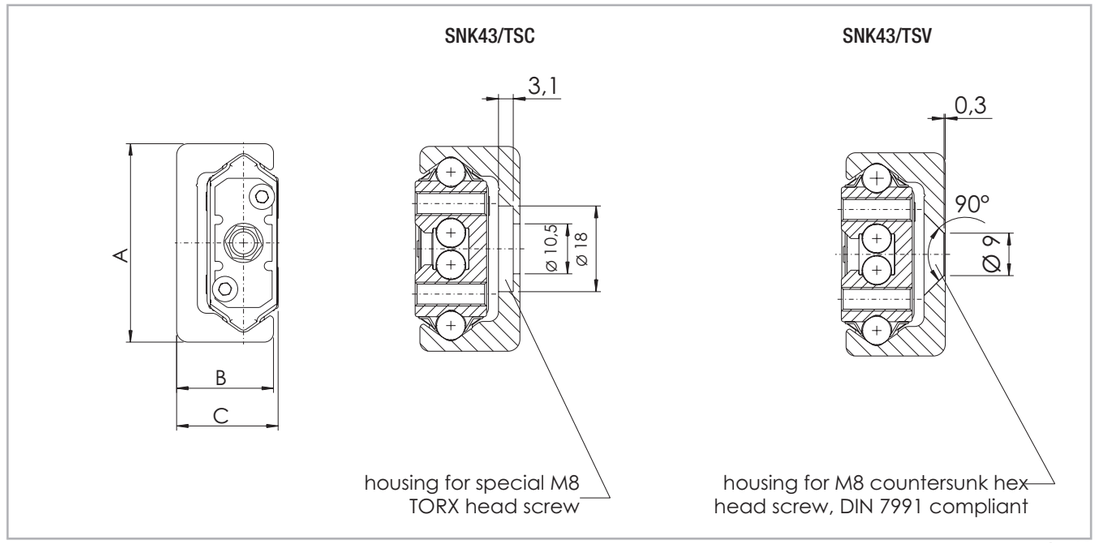

Fig. 12

Type	Size	Cross-section			Rail weight [kg/m]	Slider weight 110 [g]	Slider weight 150 [g]
		A [mm]	B [mm]	C [mm]			
TSC/TSV	43	43	21	22	2,6	360	550

Tab. 14

Technical instructions

Static load

The maximum static loads of the Easyslide series are based on the slider length and are listed in the tables of the previous pages. These load capacities are valid for a loading point of forces and moments in the center of the slider (for off-center loading, see ES-13). The load capacities are independent of the position of the slider inside the rails. During the static tests the radial load capacity, C_{0rad}, the axial load capacity, C_{0ax}, and moments M_x, M_y and M_z indicate the maximum permissible values of the loads. Higher loads negatively affect the running properties and the total mechanical strength may be compromised. A safety factor, S_0, is used to verify the static load, which takes into account the basic parameters of the application and is defined in more detail in the following table:

Safety factor S_0

Neither shocks nor vibrations, smooth and low-frequency reverse, high assembly accuracy, no elastic deformations	1 - 1.5
Normal installation conditions	1.5 - 2
Shocks and vibrations, high-frequency reverse, significant elastic deformation	2 - 3.5

Tab. 15

The ratio of the actual load to maximum permissible load may be as large as the reciprocal of the accepted safety factor, S_0, at the most.

$$\frac{P_{0rad}}{C_{0rad}} \leq \frac{1}{S_0} \qquad \frac{P_{0ax}}{C_{0ax}} \leq \frac{1}{S_0} \qquad \frac{M_1}{M_x} \leq \frac{1}{S_0} \qquad \frac{M_2}{M_y} \leq \frac{1}{S_0} \qquad \frac{M_3}{M_z} \leq \frac{1}{S_0}$$

Fig. 13

The formulas above apply for a single load case. If there are two or more of the described forces simultaneously, the following check must be made:

$$\frac{P_{0rad}}{C_{0rad}} + \frac{P_{0ax}}{C_{0ax}} + \frac{M_1}{M_x} + \frac{M_2}{M_y} + \frac{M_3}{M_z} \leq \frac{1}{S_0}$$

P_{0rad} = effective radial load
C_{0rad} = permissible radial load
P_{0ax} = effective axial load
C_{0ax} = permissible axial load
M_1 = effective moment in the x-direction
M_x = permissible moment in the x-direction
M_2 = effective moment in the y-direction
M_y = permissible moment in the y-direction
M_3 = effective moment in the z-direction
M_z = permissible moment in the z-direction

Fig. 14

Off-center load P of the slider (SN series):

For an off-center load of the slider, the different load distribution on the balls must be accounted for with a reduction of the load capacity C. As shown in the diagram to the right, this reduction of the distance, d, from the loading point is dependent on the slider center. The value, q, is the position factor, the distance, d, is expressed in fractions of slider length S. The permissible load, P, decreases as follows:

$P = q \cdot C_{0rad}$	for a radial load
$P = q \cdot C_{0ax}$	for an axial load

Fig. 15

For the static load and the service life calculation, P_{0rad} and P_{0ax} must be replaced by the equivalent values calculated as follows (see fig. 16):

$P_{0rad} = \frac{P}{q}$	if the external load, P, acts radially
$P_{0ax} = \frac{P}{q}$	if the external load, P, acts axially

Fig. 16

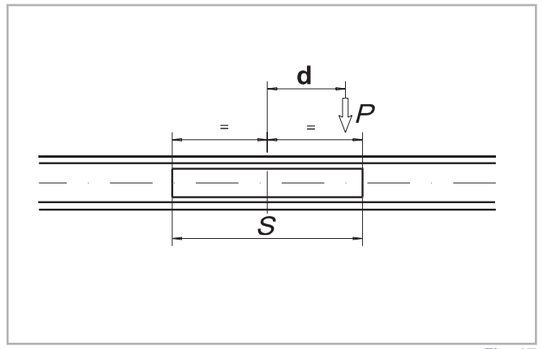

Fig. 17

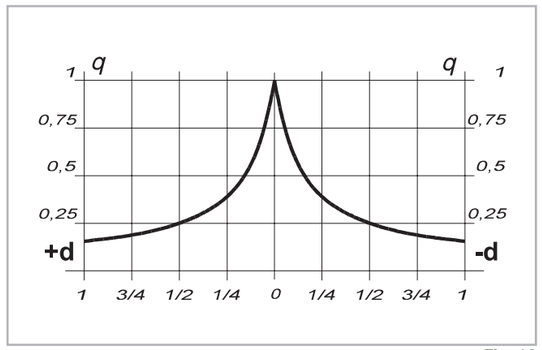

Fig. 18

ES

Service life

The service life of a linear bearing depends on several factors, such as effective load, operating speed, installation precision, occurring impacts and vibrations, operating temperature, ambient conditions and lubrication. The service life is defined as the time span between initial operation and the first fatigue or wear indications on the raceways.

In practice, the end of the service life must be defined as the time of bearing decommissioning due to its destruction or extreme wear of a component.

This is taken into account by an application coefficient (f_i in the formula below), so the service life consists of:

Series SN

$$L_{km} = 100 \cdot \left(\frac{C}{W} \cdot \frac{1}{f_i}\right)^3$$

L_{km} = calculated service life (km)
C = dynamic load capacity (N) = C_{0rad}
W = equivalent load (N)
f_i = application coefficient (see tab. 17)

Fig. 19

Series SNK

$$L_{Km} = 100 \cdot \left(\frac{C}{W} \cdot \frac{f_c}{f_i} \cdot f_h\right)^3$$

L_{km} = theoretical service life (km)
C = dynamic load capacity (N) = C_{0rad}
W = effective equivalent load (N)
f_c = contact factor
f_i = application coefficient
f_h = stroke factor

Fig. 20

The stroke factor f_h takes into account the higher load of the raceways and rollers during short strokes on the same total length of run. The corresponding values are taken from the following graph (for strokes longer than 1 m, f_h =1):

Number of sliders	1	2	3	4
f_c	1	0.8	0.7	0.63

Tab. 16

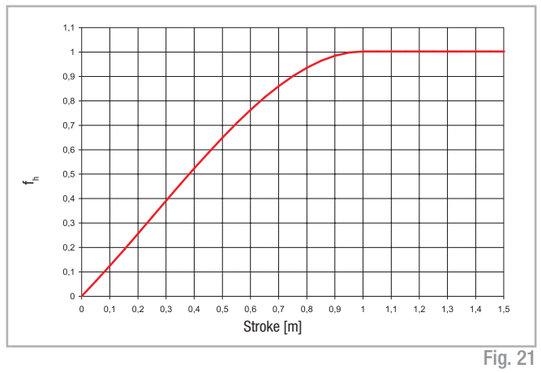

Fig. 21

Application coefficient f_i

Neither impacts nor vibrations, smooth and low-frequency direction change, clean operating conditions, low speed (<0.5 m/s)	1 - 1.5
Slight vibrations, average speeds (between 0.5 and 0.7 m/s) and average direction change	1.5 - 2
Impacts and vibrations, high-frequency direction change, high speeds (>0.7 m/s), very dirty environment	2 - 3.5

Tab. 17

If the external load, P, is the same as the dynamic load capacity, C_{0rad}, (which must never be exceeded), the service life at ideal operating conditions (f_i =1) amounts to 100 km. Naturally, for a single load P, the following applies: W = P. If several external loads occur simultaneously, the equivalent load is calculated as follows:

$$W = P_{rad} + \left(\frac{P_{ax}}{C_{0ax}} + \frac{M_1}{M_x} + \frac{M_2}{M_y} + \frac{M_3}{M_z}\right) \cdot C_{0rad}$$

Fig. 22

Clearance and preload

The linear ball bearings of the SN and SNK series are mounted as standard with no play. For more information, please contact Rollon technical support.

Preload classes		
Increased clearance	Light clearance	Increased preload
G_1	Standard	K_1

Tab. 18

** for higher preload, contact Rollon technical support.*

Coefficient of friction

With correct lubrication and installation on level and rigid surfaces and sufficient parallelism for rail pairs, the friction value is less than or equal to 0.01. This value can vary depending on the installation situation (see pg. ES-19, Instructions for use). For the SNK series, the coefficient of friction is equal to or less than 0.06.

Linear accuracy

With installation of the rails using all bolts on a perfectly plane support surface with the fixing holes in a straight line, the linear accuracy of the sliders to an external reference results from the following equation:

$$// = \frac{\sqrt{H}}{300} \text{ (mm)}$$

H = Stroke

Fig. 23

Speed

The linear bearings of the SN series can be used up to an operating speed of 0.8 m/s (31.5 in/s). With high-frequency direction changes and the resulting high accelerations, as well as with long ball cages, there is a risk of cage creep (see pg. ES-19, Instructions for use). The SNK series rails, on the other hand, reach a maximum speed of 1.5 m/s, and there is no risk of cage creep.

Temperature

The SN series can be used in ambient temperatures from -20 °C to +170 °C (-4 °F to +338 °F). The SNK series can be used at ambient temperatures between -20 °C and + 70 °C. A lithium lubricant for high operating temperatures is recommended for temperatures above +130 °C (+266 °F).

Anticorrosive protection

- The SN series standard anticorrosive protection is electrolytic zinc plating in accordance with ISO 2081. If increased anticorrosive protection is required, chemically nickel plated rails and stainless steel ball bearings are available.
- Numerous application-specific surface treatments are available upon request, e.g., FDA-approved nickel plating for use in the food industry. For more information, please contact Rollon technical support.

Lubrication SN

Recommended lubrication intervals are heavily dependent upon the ambient conditions. Under normal conditions, lubrication is recommended after 100 km operational performance or after an operating period of 6 months. In critical application cases the interval should be shorter. Please clean the raceways carefully before lubrication. Raceways and spaces of the ball cage are lubricated with a lithium lubricant of average consistency (roller bearing lubricant).

Different lubricants are available on request for special applications:

- FDA-approved lubricant for use in the food industry
- specific lubricant for clean rooms
- specific lubricant for the marine technology sector
- specific lubricant for high and low temperatures

For specific information, contact Rollon technical support.

Under normal conditions, correct lubrication:

- reduces friction
- reduces wear
- reduces stress on contact surfaces due to elastic deformation
- reduces noise during operation
- increases the regularity of the rolling movement

Lubrication SNK

Lubrication when using N-sliders SNK43

The SNK43 sliders are fitted with a self lubricating kit provided to periodically lubricate the slider.

This provides a progressive release of lubricant (see tab. 36) on the raceway during operation of the slider. The expected service life is up to 2 million cycles, depending on the type of application. The zerk fittings (see fig. 24) provide the lubrication.

Different lubricants are available on request for special applications:

- FDA-approved lubricant for use in the food industry
- specific lubricant for clean rooms
- specific lubricant for the marine technology sector
- specific lubricant for high and low temperatures

For specific information, contact Rollon technical support.

Lubricant	Thickening agent	Temperature range [°C]	Dynamic viscosity [mPas]
Mineral oil	Lithium soap	-30... to +120	< 1000
Roller bearing lubricant	Lithium soap	-30 to +170	4500

Tab. 19

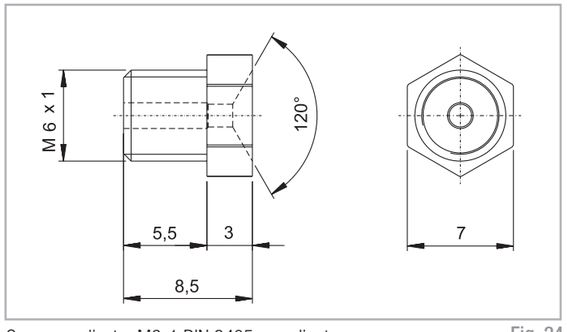

Grease applicator M6x1 DIN 3405 compliant

Fig. 24

Fixing screws

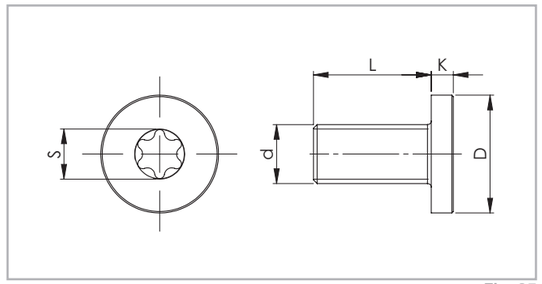

Fig. 25

The rails of the SN series in sizes 22 to 43 mm are fixed with countersunk head screws according to DIN 7991.

The SNK43 series rails are fastened with countersunk head screws according to DIN 7991 or with Torx® head screws (special design, see fig. 25).

The Torx® screws for the rails variant TSC are included.

Size	Screw type	d	D [mm]	L [mm]	K [mm]	S	Tightening torque
63	M8 x 20	M8 x 1.25	13	20	5	T40	34,7
SNK43	M8 x 16	M8 x 1,25	16	16	3	T40	22

Tab. 20

Recommended Standard fixing screw tightening torques

Property class	Size	Tightening torque [Nm]
10.9	22	3
	28	6
	35	10
	43	25
	63	30

Tab. 21

A support of the rail sides is not strictly necessary, but it helps reduce stress on the screws and increases rigidity.

Rail Bracket

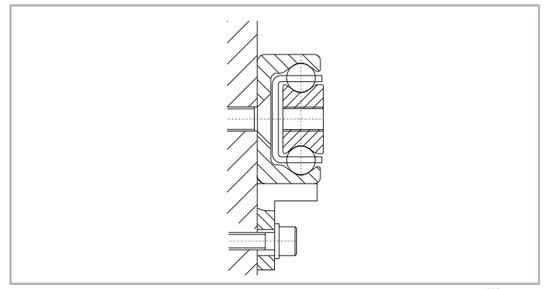

Fig. 26

A support is advisable if the safety coefficient of the application is equal to or lower than 1.5.

Installation instructions

- The internal stops on the SN series are used to stop the unloaded slider and the ball cage. Please use external stops as end stops for a loaded system.
- Prepare a sufficient bevel on the threaded fixing holes, according to the following table:

Size	Bevel (mm)
22	0,5 x 45°
28	1 x 45°
35	1 x 45°
43	1 x 45°
63	1 x 45°

Tab. 22

- To achieve optimum running properties, high service life and rigidity, it is necessary to fix the linear bearings with all accessible holes on a rigid and level surface.

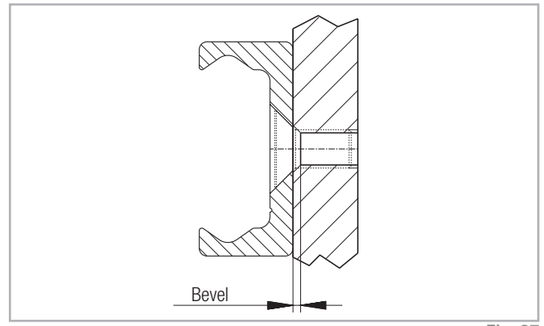

Fig. 27

SNK Joined Rails

If long guide rails are required, two or more rails can be joined to the desired length. When putting guide rails together, be sure that the register marks shown in fig. 28 are positioned correctly.
These are fabricated asymmetric for parallel application of joined guide rails, unless otherwise specified.

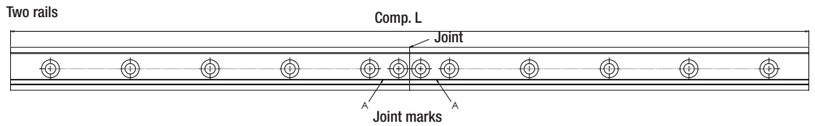

Fig. 28

General information

The maximum available rail length in one piece is indicated in table 13 on page ES-10. Longer lengths are achieved by joining two or more rails (joined rails).
Rollon machines the rail ends at a right angle to the impact surfaces and marks them. Additional fixing screws are included with the delivery, which ensure a problem-free transition of the slider over the joints, if the following installation procedures are followed. Two additional threaded holes are required in the load-bearing structure. The included end fixing screws correspond to the installation screws for the rails for cylindrical counterbores. The alignment fixture for aligning the rail joint can be ordered using the designation given in the table (tab. 23).

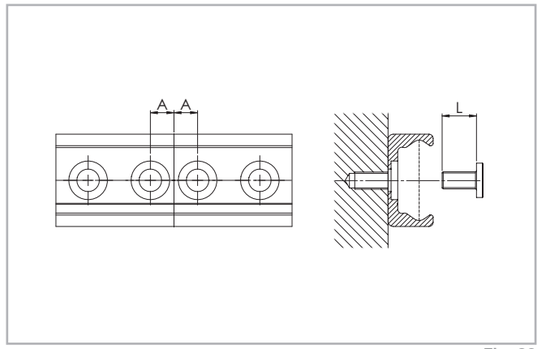

Fig. 29

Rail type	A [mm]	Threaded hole (load-bearing structure)	Screw type	L [mm]	Alignment fixture
TVC/TVS	11	M8	see pg. CR-31	16	AT43

Tab. 23

SN instructions for use

- For linear bearings of the SN series, the sliders are guided through a ball cage inside the rails. When the sliders run their course relative to the rails, the ball cage moves along for half the slider stroke. The stroke ends as soon as the slider reaches the end of the cage.
  Normally the cage moves synchronously to the balls at half the speed of the slider. Any occurring cage slip affects the synchronous movement of the ball cage negatively, causing it to reach the internal stops prematurely (cage creep). This reduces the stroke. However, the stroke value can be normalized at any time by moving the slider to the stop in the stopped cage. This moving of the slider relative to the cage will have increased resistance, which is dependent on the working load.
- The causes of cage creep can be installation accuracy, dynamics, and load changes. The effects can be minimized by observing the following advice:
  - The stroke should always remain constant and come as close as possible to the nominal stroke of the linear bearing.
  - For applications with various strokes, make sure that the drive is sufficiently dimensioned to guarantee a movement of the slider relative to the cage. A coefficient of friction of 0.1 should be calculated for this.
  - Another possibility is to include a maximum stroke without load in the working cycle in order to resynchronize the slider and ball cage.

  Parallelism errors or inaccuracies in the installation or in the mounting surfaces of mounted pairs can influence the cage creep.
- Series SN linear bearings should only be used for horizontal movement.

SNK instructions for use

- SNK: Always handle the slider out of the rail by its plastic retainer to prevent ball bearings from escaping.

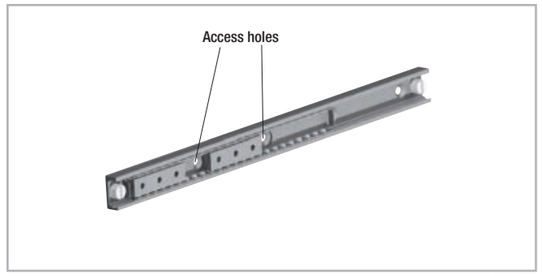

Fig. 30

If the bearing cage covers one or more fixing holes for the rail, access holes are made in the cage. The number and position of the holes can vary in different supplies.
Access to all fixing screws of the rail is guaranteed in all cases by positioning the cage aligned with the holes.

SN Standard configurations

Size 22

Ordering description	Slider	Stroke	Rail
SN22-40-60-130	40	60	130
SN22-40-140-210	40	140	210
SN22-40-220-290	40	220	290
SN22-60-40-130	60	40	130
SN22-60-120-210	60	120	210
SN22-60-200-290	60	200	290
SN22-60-280-370	60	280	370
SN22-60-360-450	60	360	450
SN22-80-100-210	80	100	210
SN22-80-180-290	80	180	290
SN22-80-260-370	80	260	370
SN22-80-340-450	80	340	450
SN22-80-420-530	80	420	530
SN22-80-500-610	80	500	610
SN22-130-130-290	130	130	290
SN22-130-210-370	130	210	370
SN22-130-290-450	130	290	450
SN22-130-370-530	130	370	530
SN22-130-450-610	130	450	610
SN22-130-530-690	130	530	690
SN22-130-610-770	130	610	770
SN22-130-690-850	130	690	850
SN22-130-770-930	130	770	930
SN22-130-850-1010	130	850	1010
SN22-210-210-450	210	210	450
SN22-210-290-530	210	290	530
SN22-210-370-610	210	370	610
SN22-210-450-690	210	450	690
SN22-210-530-770	210	530	770
SN22-210-610-850	210	610	850
SN22-210-690-930	210	690	930
SN22-210-770-1010	210	770	1010
SN22-210-930-1170	210	930	1170
SN22-290-290-610	290	290	610
SN22-290-370-690	290	370	690
SN22-290-450-770	290	450	770
SN22-290-530-850	290	530	850
SN22-290-610-930	290	610	930
SN22-290-690-1010	290	690	1010
SN22-290-850-1170	290	850	1170

Tab. 24

Size 28

Ordering description	Slider	Stroke	Rail
SN28-60-30-130	60	30	130
SN28-60-110-210	60	110	210
SN28-60-190-290	60	190	290
SN28-60-270-370	60	270	370
SN28-60-350-450	60	350	450
SN28-80-90-210	80	90	210
SN28-80-170-290	80	170	290
SN28-80-250-370	80	250	370
SN28-80-330-450	80	330	450
SN28-80-410-530	80	410	530
SN28-80-490-610	80	490	610
SN28-130-120-290	130	120	290
SN28-130-200-370	130	200	370
SN28-130-280-450	130	280	450
SN28-130-360-530	130	360	530
SN28-130-440-610	130	440	610
SN28-130-520-690	130	520	690
SN28-130-600-770	130	600	770
SN28-130-680-850	130	680	850
SN28-130-760-930	130	760	930
SN28-130-840-1010	130	840	1010
SN28-210-200-450	210	200	450
SN28-210-280-530	210	280	530
SN28-210-360-610	210	360	610
SN28-210-440-690	210	440	690
SN28-210-520-770	210	520	770
SN28-210-600-850	210	600	850
SN28-210-680-930	210	680	930
SN28-210-760-1010	210	760	1010
SN28-210-920-1170	210	920	1170
SN28-210-1080-1330	210	1080	1330
SN28-290-280-610	290	280	610
SN28-290-360-690	290	360	690
SN28-290-440-770	290	440	770
SN28-290-520-850	290	520	850
SN28-290-600-930	290	600	930
SN28-290-680-1010	290	680	1010
SN28-290-840-1170	290	840	1170
SN28-290-1000-1330	290	1000	1330
SN28-290-1160-1490	290	1160	1490
SN28-370-360-770	370	360	770
SN28-370-440-850	370	440	850
SN28-370-520-930	370	520	930
SN28-370-600-1010	370	600	1010
SN28-370-760-1170	370	760	1170
SN28-370-920-1330	370	920	1330
SN28-370-1080-1490	370	1080	1490
SN28-450-440-930	450	440	930
SN28-450-520-1010	450	520	1010
SN28-450-680-1170	450	680	1170
SN28-450-840-1330	450	840	1330
SN28-450-1000-1490	450	1000	1490
SN28-450-1160-1650	450	1160	1650

Tab. 25

Size 35

Ordering description	Slider	Stroke	Rail
SN35-130-110-290	130	110	290
SN35-130-190-370	130	190	370
SN35-130-270-450	130	270	450
SN35-130-350-530	130	350	530
SN35-130-430-610	130	430	610
SN35-130-510-690	130	510	690
SN35-130-590-770	130	590	770
SN35-130-670-850	130	670	850
SN35-130-750-930	130	750	930
SN35-130-830-1010	130	830	1010
SN35-210-190-450	210	190	450
SN35-210-270-530	210	270	530
SN35-210-350-610	210	350	610
SN35-210-430-690	210	430	690
SN35-210-510-770	210	510	770
SN35-210-590-850	210	590	850
SN35-210-670-930	210	670	930
SN35-210-750-1010	210	750	1010
SN35-210-910-1170	210	910	1170
SN35-210-1070-1330	210	1070	1330
SN35-210-1230-1490	210	1230	1490
SN35-290-270-610	290	270	610
SN35-290-350-690	290	350	690
SN35-290-430-770	290	430	770
SN35-290-510-850	290	510	850
SN35-290-590-930	290	590	930
SN35-290-670-1010	290	670	1010
SN35-290-830-1170	290	830	1170
SN35-290-990-1330	290	990	1330
SN35-290-1150-1490	290	1150	1490
SN35-290-1310-1650	290	1310	1650
SN35-370-350-770	370	350	770
SN35-370-430-850	370	430	850
SN35-370-510-930	370	510	930
SN35-370-590-1010	370	590	1010
SN35-370-750-1170	370	750	1170
SN35-370-910-1330	370	910	1330
SN35-370-1070-1490	370	1070	1490
SN35-370-1230-1650	370	1230	1650
SN35-450-430-930	450	430	930
SN35-450-510-1010	450	510	1010
SN35-450-670-1170	450	670	1170
SN35-450-830-1330	450	830	1330
SN35-450-990-1490	450	990	1490
SN35-450-1150-1650	450	1150	1650
SN35-450-1310-1810	450	1310	1810
SN35-530-590-1170	530	590	1170
SN35-530-750-1330	530	750	1330
SN35-530-910-1490	530	910	1490
SN35-530-1070-1650	530	1070	1650
SN35-530-1230-1810	530	1230	1810
SN35-610-670-1330	610	670	1330
SN35-610-830-1490	610	830	1490
SN35-610-990-1650	610	990	1650
SN35-610-1150-1810	610	1150	1810

Tab. 26

Size 43

Ordering description	Slider	Stroke	Rail
SN43-130-110-290	130	110	290
SN43-130-190-370	130	190	370
SN43-130-270-450	130	270	450
SN43-130-350-530	130	350	530
SN43-130-430-610	130	430	610
SN43-130-510-690	130	510	690
SN43-130-590-770	130	590	770
SN43-130-670-850	130	670	850
SN43-130-750-930	130	750	930
SN43-130-830-1010	130	830	1010
SN43-210-190-450	210	190	450
SN43-210-270-530	210	270	530
SN43-210-350-610	210	350	610
SN43-210-430-690	210	430	690
SN43-210-510-770	210	510	770
SN43-210-590-850	210	590	850
SN43-210-670-930	210	670	930
SN43-210-750-1010	210	750	1010
SN43-210-910-1170	210	910	1170
SN43-210-1070-1330	210	1070	1330
SN43-210-1230-1490	210	1230	1490
SN43-210-1390-1650	210	1390	1650
SN43-290-270-610	290	270	610
SN43-290-350-690	290	350	690
SN43-290-430-770	290	430	770
SN43-290-510-850	290	510	850
SN43-290-590-930	290	590	930
SN43-290-670-1010	290	670	1010
SN43-290-830-1170	290	830	1170
SN43-290-990-1330	290	990	1330
SN43-290-1150-1490	290	1150	1490
SN43-290-1310-1650	290	1310	1650
SN43-290-1470-1810	290	1470	1810
SN43-370-350-770	370	350	770
SN43-370-430-850	370	430	850
SN43-370-510-930	370	510	930
SN43-370-590-1010	370	590	1010
SN43-370-750-1170	370	750	1170
SN43-370-910-1330	370	910	1330
SN43-370-1070-1490	370	1070	1490
SN43-370-1230-1650	370	1230	1650
SN43-370-1390-1810	370	1390	1810
SN43-450-430-930	450	430	930
SN43-450-510-1010	450	510	1010
SN43-450-670-1170	450	670	1170
SN43-450-830-1330	450	830	1330
SN43-450-990-1490	450	990	1490
SN43-450-1150-1650	450	1150	1650
SN43-450-1310-1810	450	1310	1810
SN43-450-1470-1970	450	1470	1970
SN43-530-590-1170	530	590	1170
SN43-530-750-1330	530	750	1330
SN43-530-910-1490	530	910	1490
SN43-530-1070-1650	530	1070	1650
SN43-530-1230-1810	530	1230	1810
SN43-530-1390-1970	530	1390	1970
SN43-610-670-1330	610	670	1330
SN43-610-830-1490	610	830	1490
SN43-610-990-1650	610	990	1650
SN43-610-1150-1810	610	1150	1810
SN43-610-1310-1970	610	1310	1970

Tab. 27

Size 63

Ordering description	Slider	Stroke	Rail
SN63-130-400-610	130	400	610
SN63-130-480-690	130	480	690
SN63-130-560-770	130	560	770
SN63-130-640-850	130	640	850
SN63-130-720-930	130	720	930
SN63-130-800-1010	130	800	1010
SN63-210-320-610	210	320	610
SN63-210-400-690	210	400	690
SN63-210-480-770	210	480	770
SN63-210-560-850	210	560	850
SN63-210-640-930	210	640	930
SN63-210-720-1010	210	720	1010
SN63-210-880-1170	210	880	1170
SN63-210-1040-1330	210	1040	1330
SN63-210-1200-1490	210	1200	1490
SN63-210-1360-1650	210	1360	1650
SN63-290-240-610	290	240	610
SN63-290-320-690	290	320	690
SN63-290-400-770	290	400	770
SN63-290-480-850	290	480	850
SN63-290-560-930	290	560	930
SN63-290-640-1010	290	640	1010
SN63-290-800-1170	290	800	1170
SN63-290-960-1330	290	960	1330
SN63-290-1120-1490	290	1120	1490
SN63-290-1280-1650	290	1280	1650
SN63-370-320-770	370	320	770
SN63-370-400-850	370	400	850
SN63-370-480-930	370	480	930
SN63-370-560-1010	370	560	1010
SN63-370-720-1170	370	720	1170
SN63-370-880-1330	370	880	1330
SN63-370-1040-1490	370	1040	1490
SN63-370-1200-1650	370	1200	1650
SN63-370-1360-1810	370	1360	1810
SN63-450-400-930	450	400	930
SN63-450-480-1010	450	480	1010
SN63-450-640-1170	450	640	1170
SN63-450-800-1330	450	800	1330
SN63-450-960-1490	450	960	1490
SN63-450-1120-1650	450	1120	1650
SN63-450-1280-1810	450	1280	1810
SN63-530-560-1170	530	560	1170
SN63-530-720-1330	530	720	1330
SN63-530-880-1490	530	880	1490
SN63-530-1040-1650	530	1040	1650
SN63-530-1200-1810	530	1200	1810
SN63-530-1360-1970	530	1360	1970
SN63-610-640-1330	610	640	1330
SN63-610-800-1490	610	800	1490
SN63-610-960-1650	610	960	1650
SN63-610-1120-1810	610	1120	1810
SN63-610-1280-1970	610	1280	1970

Tab. 28

The most commonly used standard configurations are shown in the tables. Other deviating configurations and customer-specific adaptations are possible. For more information, please contact Rollon Technical Support.

Ordering key

SN Version 1 with a slider

SN	35	290	430	770	K1	NIC
						Expanded surface protection *see pg. ES-16, Anticorrosive protection*
					Clearance and preload, if deviating from standard *see pg. ES-15, tab. 18*	
				Rail length *see pg. ES-5, tab. 2, 4, 6, 8, 10*		
			Stroke *see pg. ES-5, fig. 7, tab. 1 to 10*			
		Slider length *see pg. ES-5, tab. 1, 3, 5, 7, 9*				
	Size *see pg. ES-5, Performance characteristics*					
Product type						

Ordering example 1: SN35-0290-0430-0770

Ordering example 2: SN35-0290-0430-0770-K1-NIC

Notes on ordering: Rail and slider lengths, as well as strokes, are always stated with 4 digits. Please use zeroes to fill in for lengths with less than 4 digits

SN version 2 with multiple independent sliders

SN	43	2	290	350	1330	G1	NIC
							Expanded surface protection *see pg. ES-16, Anticorrosive protection*
						Clearance and preload, if deviating from standard *see pg. ES-15, tab. 18*	
					Rail length *see pg. ES-5, tab. 2, 4, 6, 8, 10*		
				Stroke of the individual sliders *see pg. ES-5, fig. 7, tab. 1 to 10*			
			Slider length *see pg. ES-5, tab. 1, 3, 5, 7, 9*				
		Number of sliders					
	Size *see pg. ES-5, Performance characteristics*						
Product type							

Ordering example 1: SN43-2x0290-0350-1330

Ordering example 2: SN43-2x0290-0350-1330-G1-NIC

If the individual slider lengths and/or strokes are different, please order according to ordering example 3.

Ordering example 3: SN28-1x0200-0300/1x0250-0415-1240

Notes on ordering: Rail and slider lengths, as well as strokes, are always stated with 4 digits. Please use zeroes to fill in for lengths with less than 4 digits

SN Version 3 with multiple synchronized sliders

SN	63	850	(370+290)	400	1330	K1	NIC
							Expanded surface protection *see pg. ES-16, Anticorrosive protection*
						Clearance and preload, if deviating from standard *see pg. ES-15, tab. 18*	
					Rail length *see pg. ES-5, tab. 2, 4, 6, 8, 10*		
				Stroke *see pg. ES-5, fig. 7, tab. 1 to 10*			
			Individual length of slider *see pg. ES-5, tab. 1, 3, 5, 7, 9*				
		Apparent length, S´ of the slider *see pg. ES-8, fig. 9*					
	Size *see pg. ES-5 Performance characteristics*						
Product type							

Ordering example 1: SN63-0850(370+290)-0400-1330

Ordering example 2: SN63-0850(370+290)-0400-1330-K1-NI C

Notes on ordering: Rail and slider lengths, as well as strokes, are always stated with 4 digits. Please use zeroes to fill in for lengths with less than 4 digits

Serie SNK

SNK	43	1	110	2320	TSC	NIC
						For surface protection different from standard ISO 2081 *see pg. ES-16*
					Tipo di guida *see pg. ES-10 e ES-11*	
				Rail length *see pg. ES-10 tab 13*		
			Slider length *see pg. ES-10.*			
		Number of sliders for each rail				
	Size *see pg. ES-5 Performance characteristics*					
Product type						

Ordering example: SNK43-1x110-02320-TSC-NIC

Rail kit: 1x2000+1x320 (only for joined rails)

Drilling pattern: 40-40x80-40//40-15x80-40 (always state the drilling pattern separately)

Note for ordering: Rail lengths are always shown with five figures, and slider lengths are indicated with three figures preceded by zeros

Notes

ROLLON®
BY TIMKEN

Curviline



Product explanation

Curviline are curvilinear rails for constant and variable radii



Fig. 1

Curviline is the name of the curvilinear rail product family that is used for all non-linear special movements. Rails with constant or variable radii may be specified according to customer requirements, resulting in a highly flexible, economical solution. Curviline is available in two rail widths.
The use of standard radii is recommended. All non-standard rail layouts and radii are possible as custom products, however extra lead time may result.

The most important characteristics:

- Straight and curved sections in one continuos rail is possible
- Sliders with four rollers arranged in pairs maintain the preload over the entire rail length
- Custom production according to customer requirements
- Also available in stainless steel

Preferred areas of application of the Curviline product family:

- Packaging machines
- Railway car interior doors
- Special extensions
- Shipbuilding (interior doors)
- Food industry

Constant radii

The layout of CKR guide rails corresponds to a partial section of a complete circle.



Fig. 2

Variable radii

CVR curvilinear rail is a combination of variable radii and straight sections.



Fig. 3

Straight rail

The linear rail Curviline is also available in its straight version.



Fig. 4

Slider

The carriage maintains the desired preload over the entire rail layout. Pivoting roller mounts coupled with concentric and eccentric rollers allows for a smooth operation over complex rail layouts.



Fig. 5

Technical data

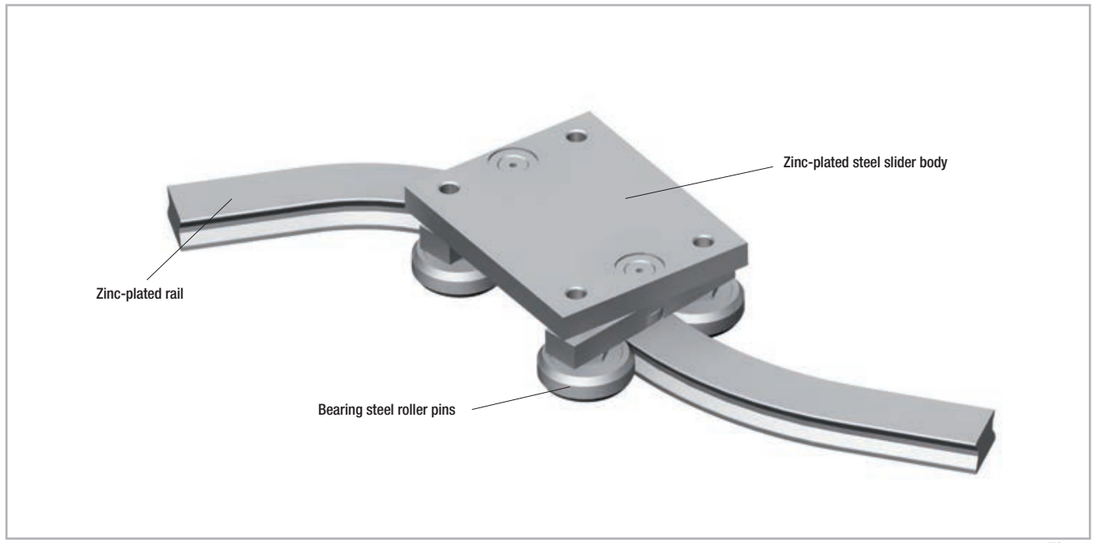

Fig. 6

Performance characteristics:

- Available rail widths: CKR01/CVR01: 16.5 mm (0.65 in) and CKR05/CVR05: 23 mm (0.91 in)
- Max. slider operating speed on the rail: 1.5 m/s (59 in/s) (depending on application)
- Max. acceleration: 2 m/s² (78 in/s²) (depending on application)
- Max. effective length of the rail: 3,240 mm (127.56 in)
- Max. traverse: CCT08: 3,170 mm (124.8 in) and CCT11: 3,140 mm (123.62 in)
- Minimum radius for steel version and not hardened version: 120 mm
- Minimum radius for version with hardened raceways: 300 mm for section 01, 400 mm for size 05 For non-standard radii, please contact Rollon technical support.
- Radius tolerance +/- 0.5 mm (0.02 in), angle tolerance +/- 1°
- Temperature range: -20 °C to +80 °C (-4 °F to +176 °F)
- Rail and runner electrolytic zinc-plated and passivated (Rollon Aloy); increased anticorrosive protection on request (see pg. CL-10 Anticorrosive protection)
- Rail material: C43, AISI316L for the stainless steel version
- Slider body material: Fe360, AISI316L for the stainless steel version
- Radial ball bearing roller material: 100Cr6, AISI440 for the stainless steel version
- Rollers are lubricated for life

Remarks:

- With a simple adjustment of the eccentric roller (denoted with a marking on the bottom of the roller), the slider preload can be set to desired preload, including clearance.
- The recommended hole pitch is 80 mm (3.15 in) on the extended length
- Please indicate the precise rail layout and the desired hole pattern in a drawing
- Indicate if the design is a right or left version when ordering
- Joined rails are not recommended. For more information, please contact Rollon technical support.
- Resulting moment loads must be absorbed through the use of two sliders. For more information, please contact Rollon technical support.

Product dimensions

Rails with constant/variable radii with tempered raceways

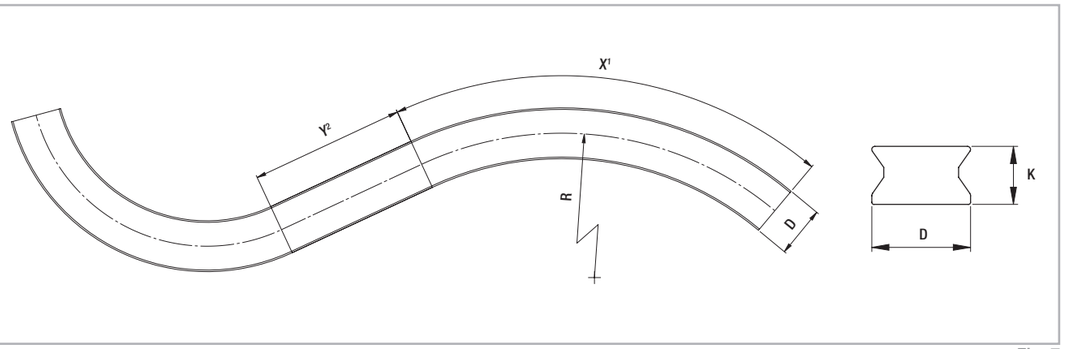

[1] The max. angle (X) is dependent on the radius
[2] For curvilinear rails with variable radii, Y must be at least 70 mm

Fig. 7

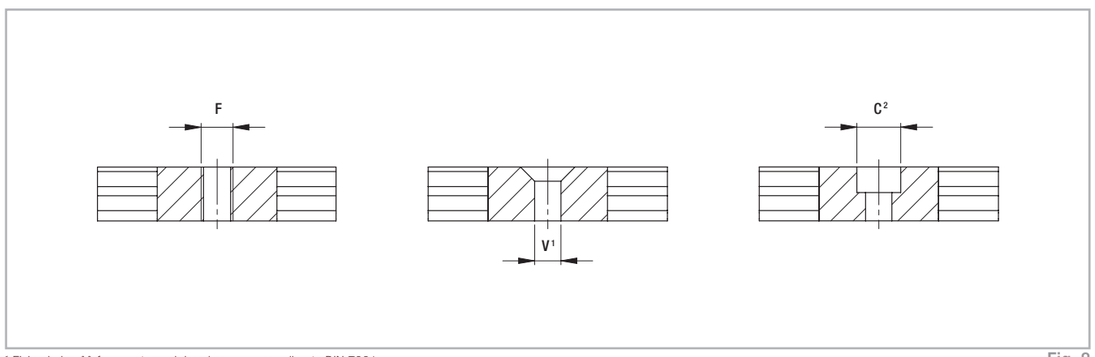

[1] Fixing holes (V) for countersunk head screws according to DIN 7991
[2] Fixing holes (C) for socket cap screws according to DIN 912

Fig. 8

Type	D [mm]	K [mm]	F	C²	V¹	X	Standard radii [mm]	Y [mm]	Weight [kg/m]
CKRH01 CVRH01	16,5	10	up to M6	up to M5	up to M5	dependent on radius	300* - 400 - 500 - 600 - 700 - 800 - 900 - 1000	min. 70	1,2
CKRH05 CVRH05	23	13,5	up to M8	up to M6	up to M6				2,2

* Only for size 01

Tab. 1

Please indicate the precise rail layout and the desired hole pattern in a drawing. We recommend 80 mm (3.15 in) on the extended length as a gage for the hole pattern.

Non-standard radii are possible as special products. For more information on rail layouts, radii and hole patterns, please contact Rollon Technical Support.

Slider

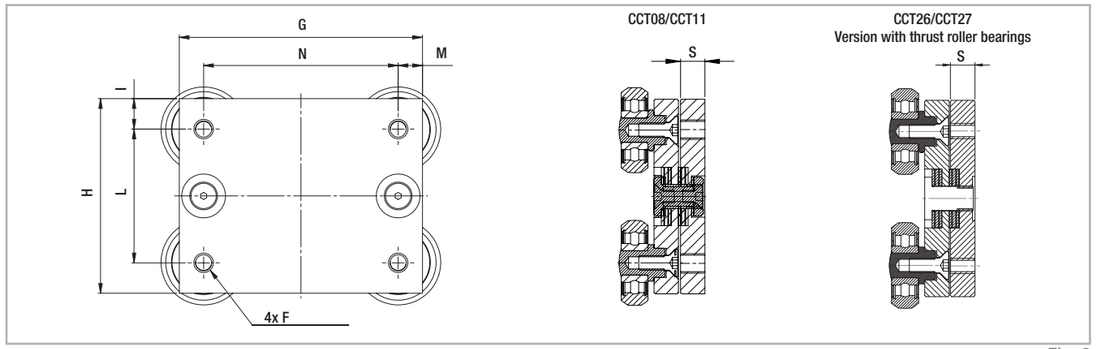

Fig. 9

Type	G [mm]	H [mm]	I [mm]	L [mm]	M [mm]	N [mm]	S [mm]	F	Weight [kg]
CCT08/CCT26	70	50	10	30	10	50	10	M5	0,45
CCT11/CCT27	100	80	12,5	55	10	80	10	M8	1,1

Tab. 2

Mounted sliders and rails

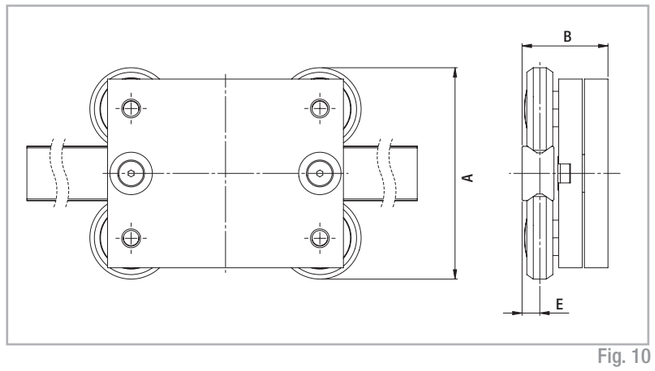

Fig. 10

Configuration	A [mm]	B [mm]	E [mm]
CKRH01-CCT08/CCT26 CVRH01-CCT08/CCT26	60	32,3	5,7
CKRH05-CCT11/CCT27 CVRH05-CCT11/CCT27	89,5	36,4	7,5

Tab. 3

Load capacities

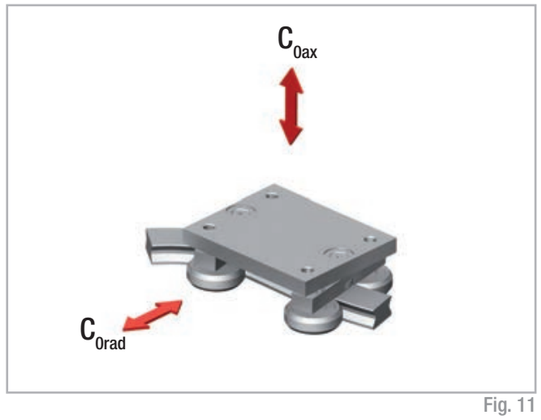

Fig. 11

Slider type	Load capacities	
	C_{0ax} [N]	C_{0rad} [N]
CKRH01-CCT08/CCT26 CVRH01-CCT08/CCT26	592	980
CKRH05-CCT11/CCT27 CVRH05-CCT11/CCT27	1459	2475

Resulting moment loads must be absorbed through the use of two sliders

Tab. 4

Rails with constant/variable radii in carbon steel

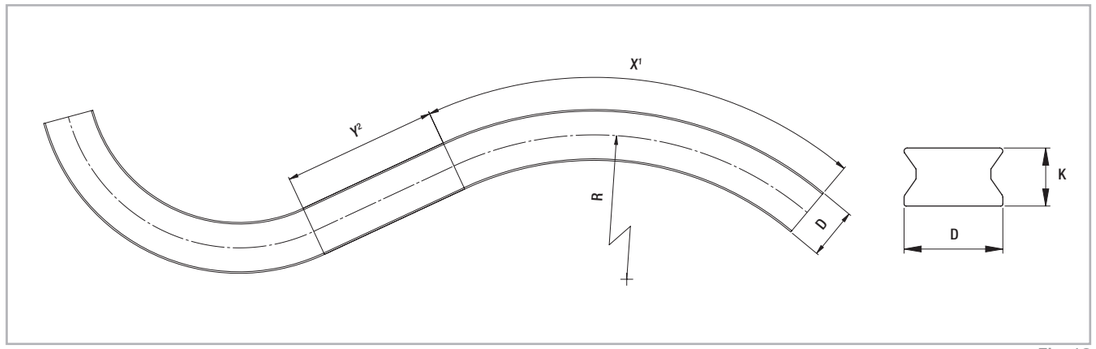

Fig. 12

[1] The max. angle (X) is dependent on the radius
[2] For curvilinear rails with variable radii, Y must be at least 70 mm

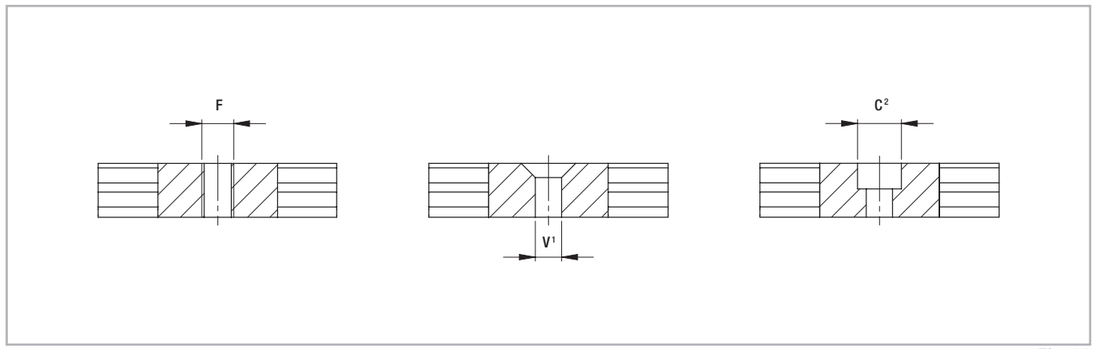

Fig. 13

[1] Fixing holes (V) for countersunk head screws according to DIN 7991
[2] Fixing holes (C) for socket cap screws according to DIN 912

Type	D [mm]	K [mm]	F	C²	V¹	X	Standard radii [mm]	Y [mm]	Weight [kg/m]
CKR01 CVR01	16,5	10	up to M6	up to M5	up to M5	dependent on radius	150 - 200 - 250 - 300 - 400 - 500 - 600 - 700 - 800 - 900 - 1000	min. 70	1,2
CKR05 CVR05	23	13,5	up to M8	up to M6	up to M6				2,2

Tab. 5

Please indicate the precise rail layout and the desired hole pattern in a drawing. We recommend 80 mm (3.15 in) on the extended length as a gage for the hole pattern.

Non-standard radii are possible as special products. For more information on rail layouts, radii and hole patterns, please contact Rollon Technical Support.

Slider

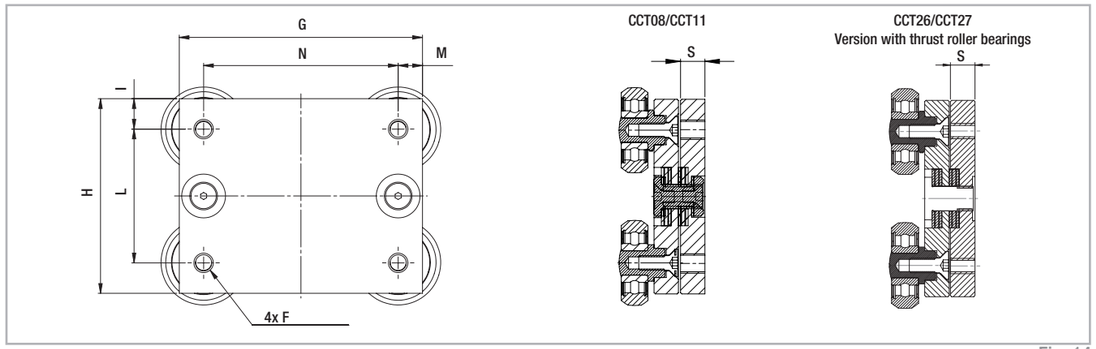

Fig. 14

Type	G [mm]	H [mm]	I [mm]	L [mm]	M [mm]	N [mm]	S [mm]	F	Weight [kg]
CCT08/CCT26	70	50	10	30	10	50	10	M5	0,45
CCT11/CCT27	100	80	12,5	55	10	80	10	M8	1,1

Tab. 6

Mounted sliders and rails

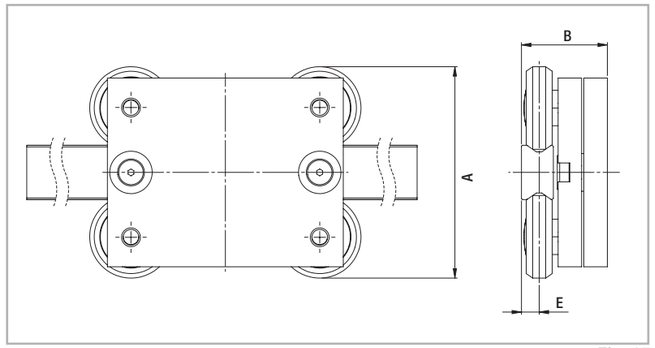

Fig. 15

Configuration	A [mm]	B [mm]	E [mm]
CKR01-CCT08/CCT26 CVR01-CCT08/CCT26	60	32,3	5,7
CKR05-CCT11/CCT27 CVR05-CCT11/CCT27	89,5	36,4	7,5

Tab. 7

Load capacities

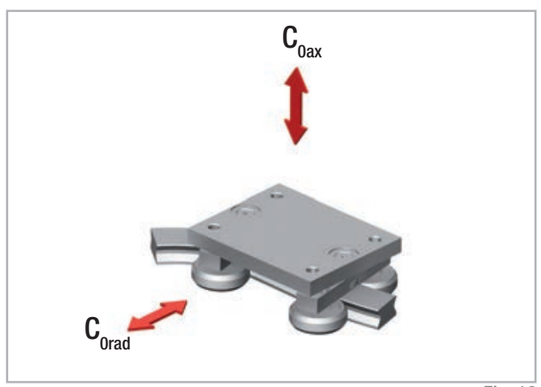

Fig. 16

Slider type	Load capacities	
	C_{0ax} [N]	C_{0rad} [N]
CKR01-CCT08/CCT26 CVR01-CCT08/CCT26	400	570
CKR05-CCT11/CCT27 CVR05-CCT11/CCT27	1130	1615

Tab. 8

Resulting moment loads must be absorbed through the use of two sliders

Rails with constant/variable radii in stainless steel

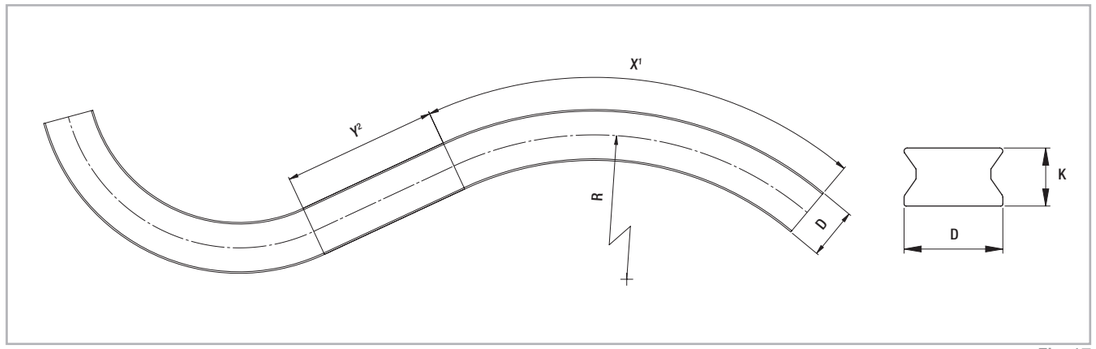

Fig. 17

[1] The max. angle (X) is dependent on the radius
[2] For curvilinear rails with variable radii, Y must be at least 70 mm

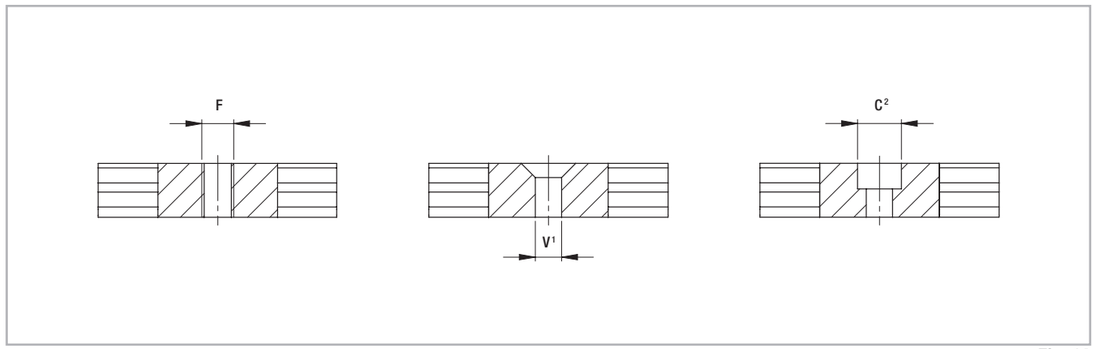

Fig. 18

[1] Fixing holes (V) for countersunk head screws according to DIN 7991
[2] Fixing holes (C) for socket cap screws according to DIN 912

Type	D [mm]	K [mm]	F	C²	V¹	X	Standard radii [mm]	Y [mm]	Weight [kg/m]
CKRX01 CVRX01	16,5	10	up to M6	up to M5	up to M5	dependent on radius	150 - 200 - 250 - 300 - 400 - 500 - 600 - 700 - 800 - 900 - 1000	min. 70	1,2
CKRX05 CVRX05	23	13,5	up to M8	up to M6	up to M6				2,2

Tab. 9

Please indicate the precise rail layout and the desired hole pattern in a drawing. We recommend 80 mm (3.15 in) on the extended length as a gage for the hole pattern.

Non-standard radii are possible as special products. For more information on rail layouts, radii and hole patterns, please contact Rollon Technical Support.

Slider in stainless steel

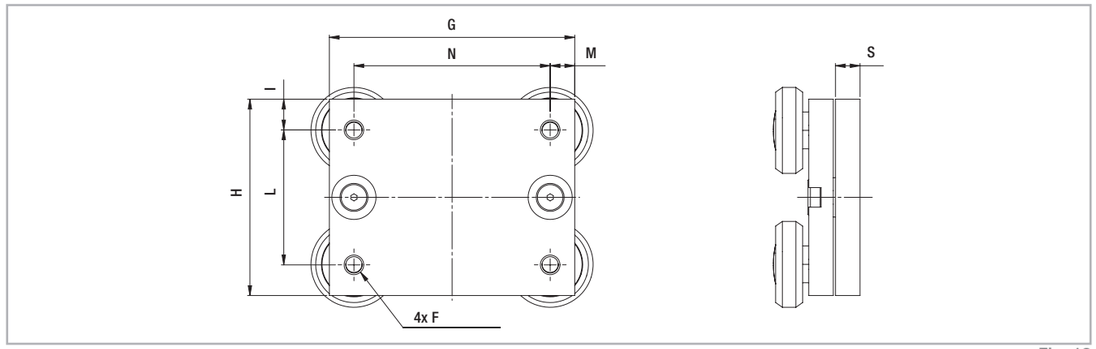

Fig. 19

Type	G [mm]	H [mm]	I [mm]	L [mm]	M [mm]	N [mm]	S [mm]	F	Weight [kg]
CCTX08	70	50	10	30	10	50	10	M5	0,45
CCTX11	100	80	12,5	55	10	80	10	M8	1,1

Tab. 10

Rail-slider package in stainless steel

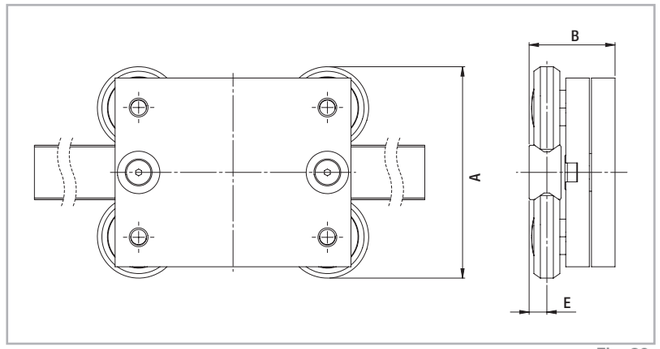

Fig. 20

Configuration	A [mm]	B [mm]	E [mm]
CKRX01-CCTX08 CVRX01-CCTX08	60	32,3	5,7
CKRX05-CCTX11 CVRX05-CCTX11	89,5	36,4	7,5

Tab. 11

Load capacities

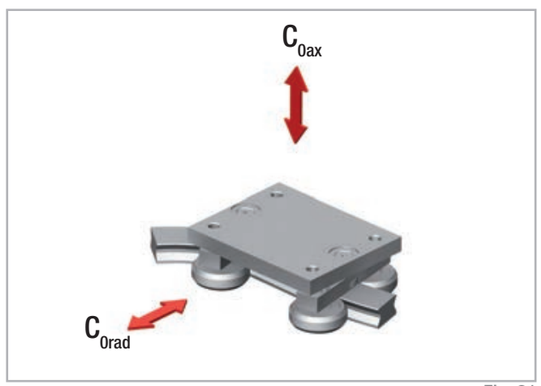

Fig. 21

Slider type	Load capacities	
	C_{0ax} [N]	C_{0rad} [N]
CKRX01-CCTX08 CVRX01-CCTX08	400	570
CKRX05-CCTX11 CVRX05-CCTX11	1130	1615

Resulting moment loads must be absorbed through the use of two sliders

Tab. 12

Technical instructions

Anticorrosive protection

The Curviline product family comes standard with electrolytic zinc plating with passivation (RolonAloy) for anitcorrosion protection. If increased anticorrosive protection is required, application-specific surface treatments are available on request, e.g. as nickel-plated design with FDA approval for use in the food industry. The Curviline series is also available in stainless steel. For more information, please contact Rollon technical support.

Lubrication

Roller lubrication

All rollers of the Curviline product family are lubricated for life.

Lubrication of the raceways

Rails must be lubricated before operation. Recommended lubrication intervals are heavily dependent upon the ambient conditions, speed and temperature. Under normal conditions, lubrication is recommended after 100 km operational performance or after an operating period of six months. In critical application cases the interval should be shorter. Please clean the raceways carefully before lubrication.
We recommend a roller bearing lubricant with a lithium base of average consistency.

Proper lubrication during normal conditions:

- reduces friction
- reduces wear
- reduces the load of the contact surfaces through elastic deformations
- reduces running noise

Different lubricants are available by request for special applications:

- FDA-approved lubricant for use in the food industry
- specific lubricant for clean rooms
- specific lubricant for the marine technology sector
- specific lubricant for high and low temperatures

For specific information, contact Rollon technical support.

Setting the preload

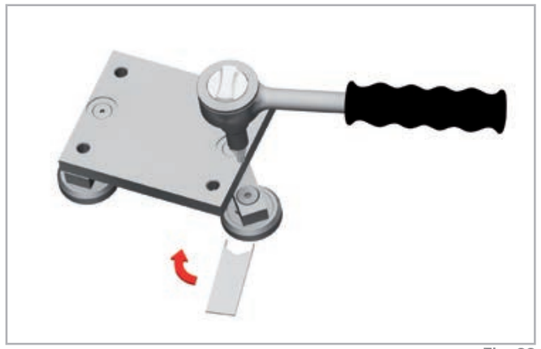

Fig. 22

Type	Tightening torque [Nm]
CCT08	7
CCT11	12

Tab. 13

If the curvilinear rails are delivered as a system, the sliders are already set with no clearance. In this case the fixing screws are secured with Loctite® at the factory.
If delivered separately, or if the sliders should be installed in another track, the eccentric roller pins must be readjusted. Important: The fixing screws must be additionally glued against loosening. The following points must also be observed:

- Wipe the raceways of any dirt and debris.
- Slightly loosen the fixing screws of the roller mounting.
  The eccentric roller pins are marked on the bottom.
- Position the slider(s) at the ends of the rail.
- The special flat key provided is inserted from the side onto the hexagonal of the roller to be set (see fig. 22).
- By turning the flat key clockwise the roller is pressed against the raceway and thus reduces the clearance. Observe that with increasing preload, the friction is also increased and thus the service life reduced.
- Hold the roller pin with the adjustment key in the desired position and carefully tighten the fixing screw. The exact tightening torque will be checked later.
- Move the slider on the rail and check the preload over the entire length of the rail. It should move easily and the slider should not have play at any location of the rail.
- Now tighten the fixing screws with the specified tightening torque (see tab. 13), while the flat key holds the angle adjustment of the pin. A special thread in the roller pin secures the set position.

Ordering key

Constant radius rail / slider system

CKR01	**85°**	**600**	**890**	**/2/**	**CCT08**	**NIC**	**R**	
							Right or left version	
						Expanded surface protection if deviation from Standard *see pg. CL-12 Anticorrosion protection*		
					Slider type	*see pg. CL-7, tab. 3*		
				Number of sliders				
			Rails extended length					
		Radius	*see pg. CL-6, tab. 1*					
	Angle							
Rail type	*see pg. CL-6, tab. 1*							

Ordering example: CKR01-085°-0600-0890/2/CCT08-NIC-R

Note: Information for right and left side installation and for expanded surface protection is only necessary if required

Notes on ordering: Rail lengths and radii always are indicated with four digits, angles always with three digits and a zero as prefix

Exact specifications (angle, radius, hole pattern, etc.) must be represented in a drawing

Variable radius rail / slider system

CVR01	**39°**	**200**	**//23°**	**400**	**297**	**/2/**	**CCT08**	**NIC**	**R**
									Right or left version
								Expanded surface protection if deviation from Standard *see pg. CL-8 Anticorrosion protection*	
							Slider type	*see pg. CL-7, tab. 3*	
						Number of sliders			
					Rails extended length				
				Radius	*see pg. CL-6, tab. 1*				
			Angle						
		Radius	*see pg. CL-6, tab. 1*						
	Angle								
Rail type	*see pg. CL-6, tab. 1*								

Ordering example: CVR01-039°-0200//023°-0400-0297/2/CCT08-NIC-R

Note: Data for angles and respective radii are in sequential order

Note: Information for right and left side installation and for expanded surface protection is only necessary if required

Notes on ordering: Rail lengths and radii always are indicated with four digits, angles always with three digits and a zero as prefix

Exact specifications (layout, angle, radius, hole pattern, etc.) must be represented in a drawing

Constant radius rails

CKR01	**120°**	**600**	**1152**	**NIC**	**R**
					Right or left version
				Expanded surface protection if deviation from Standard *see pg. CL-12 Anticorrosion protection*	
			Rails extended length		
		Radius	*see pg. CL-6, tab. 1*		
	Angle				
Rail type	*see pg. CL-6, tab. 1*				

Ordering example: CKR01-120°-0600-1152-NIC-R

Note: Information for right and left side installation and for expanded surface protection is only necessary if required

Notes on ordering: Rail lengths and radii always are indicated with four digits, angles always with three digits and a zero as prefix

Exact specifications (angle, radius, hole pattern, etc.) must be represented in a drawing

Variable radius rails

CVR01	**39°**	**200**	**//23°**	**400**	**297**	**NIC**	**R**
							Right or left version
						Expanded surface protection if deviation from Standard *see pg. CL-12 Anticorrosion protection*	
					Rails extended length		
				Radius	*see pg. CL-6, tab. 1*		
			Angle				
		Radius	see *pg. CL-6, tab. 1*				
	Angle						
Rail type	see *pg. CL-6, tab. 1*						

Ordering example: CVR01-039°-0200//023°-0400-0297-NIC-R

Note: Data for various angles and respective radii are in sequential order

Note: Information for right and left side installation and for expanded surface protection is only necessary if required

Notes on ordering: Rail lengths and radii always are indicated with four digits, angles always with three digits and a zero as prefix

Exact specifications (layout, angle, radius, hole pattern, etc.) must be represented in a drawing

Slider

CCT08	**NIC**	
	Expanded surface protection if deviation from Standard	*see pg. CL-12 Anticorrosion protection*
Slider type	*see pg. CL-7, tab. 3*	

Ordering example: CCT08-NIC

Note: Information for expanded surface protection are only necessary when needed

ROLLON®
BY TIMKEN

Prismatic Rail

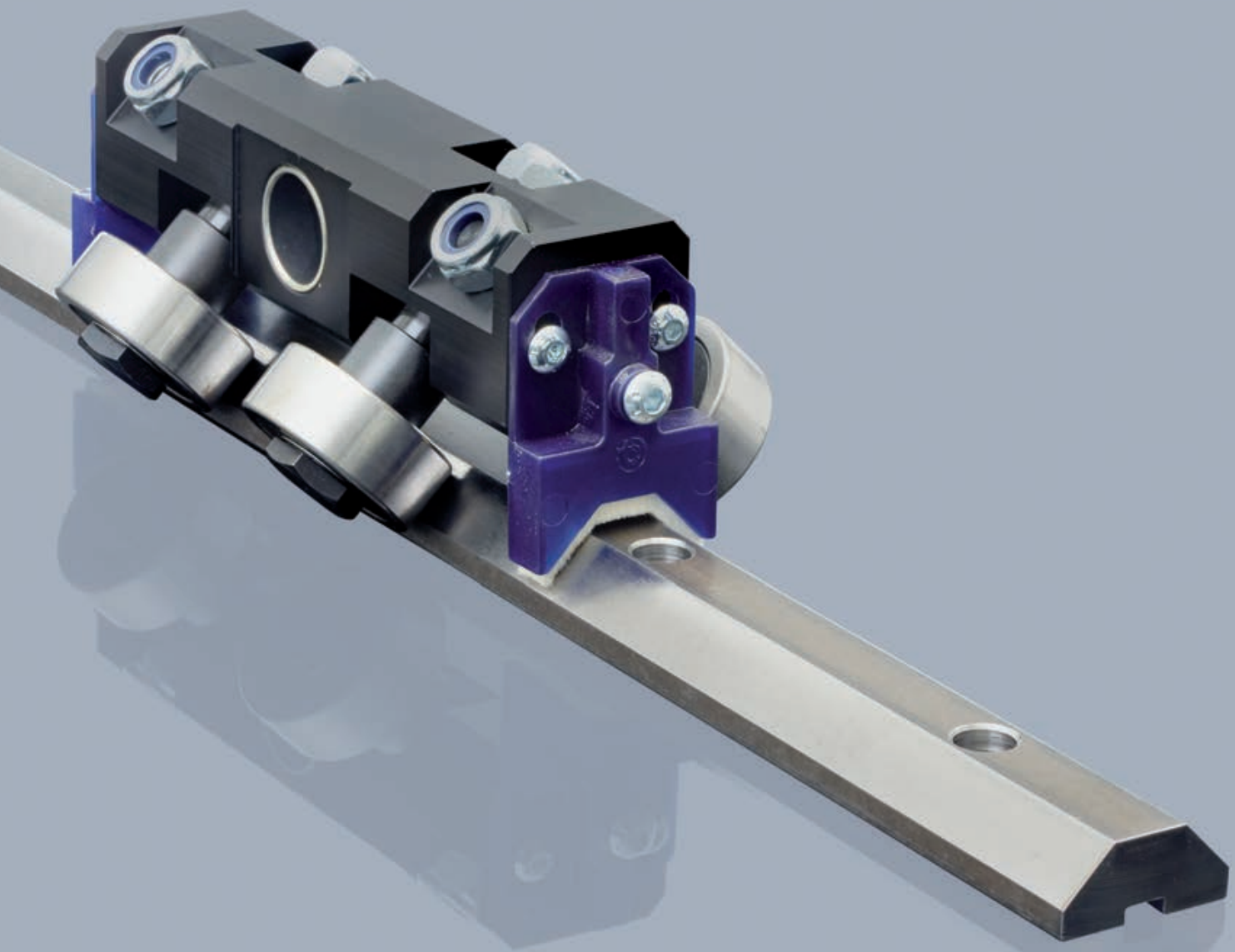

Product explanation

Prismatic Rail: with cylindrical or V-shaped rollers

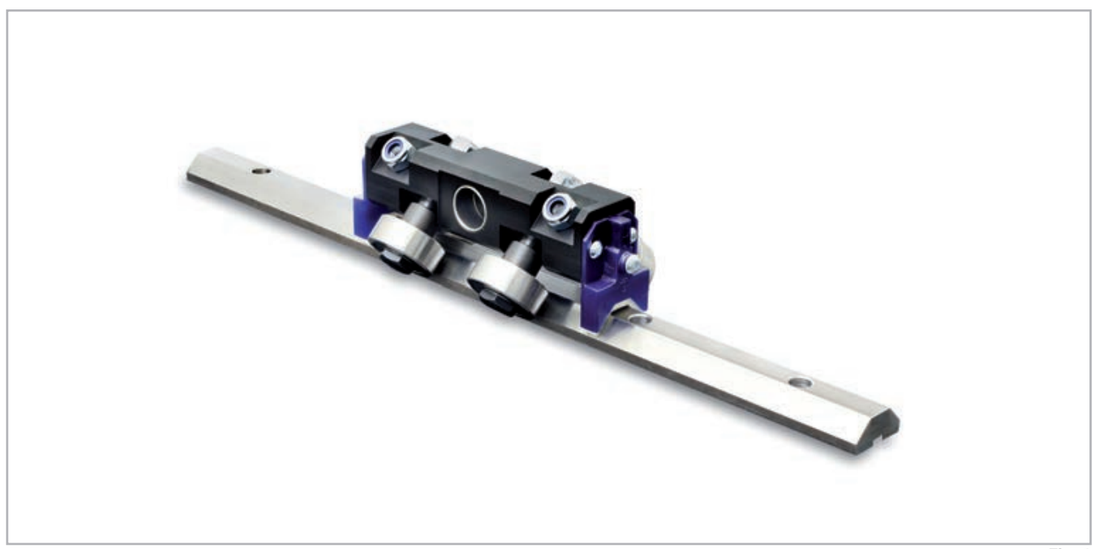

Fig. 1

The Prismatic Rail product family is composed of roller sliders sliding on V-shaped rails made of hardened steel. These linear guides also have high self-alignment properties.

V-shaped rails are induction hardened and polished, available in three sizes: 28, 35 and 55 mm. Rails can be machined with two straight cuts, one straight and one slanting cut or two slanting cuts. These options allow to create joinable versions, and thus obtaining longer strokes.

The aluminium slider can be configured with a variable number of rollers with steel pins, ranging from 3 to 6. Rollers are in turn available in two variants, cylindrical or V-shaped, with variable diameter from Ø30 a Ø62 depending on rail size.

The most important characteristics:

- Long life thanks to hardened raceways
- Optimal reliability in dirty environments
- Self-aligning system
- Simple mounting
- High dynamics

Preferred areas of application:

- Robot and handling systems
- Industrial automation
- Logistics
- Packaging machines

Drilled guide rails with straight cut:

Machining provided for guide rails with no joint.



Fig. 2

Drilled guide rails with one straight and one slanting cut:

Machining provided for the crop down sizes of guide rail ends with joints.



Fig. 3

Drilled guide rails with 2 slanting cuts:

Machining provided for the intermediate crop down sizes of guide rail ends with multiple joints.



Fig. 4

Sliders with rollers Ø30 - Ø40:

Floating and fixed sliders with rollers Ø30 (guide size 28) and Ø40 (guide size 35).



Fig. 5

Sliders with rollers Ø52- Ø62:

Floating and fixed sliders with rollers Ø52 and Ø62 (guide size 55).

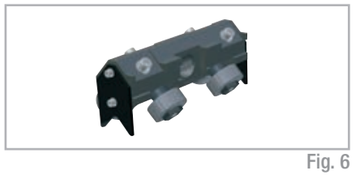

Fig. 6

Assembly pins:

Steel pins.



Fig. 7

Technical data

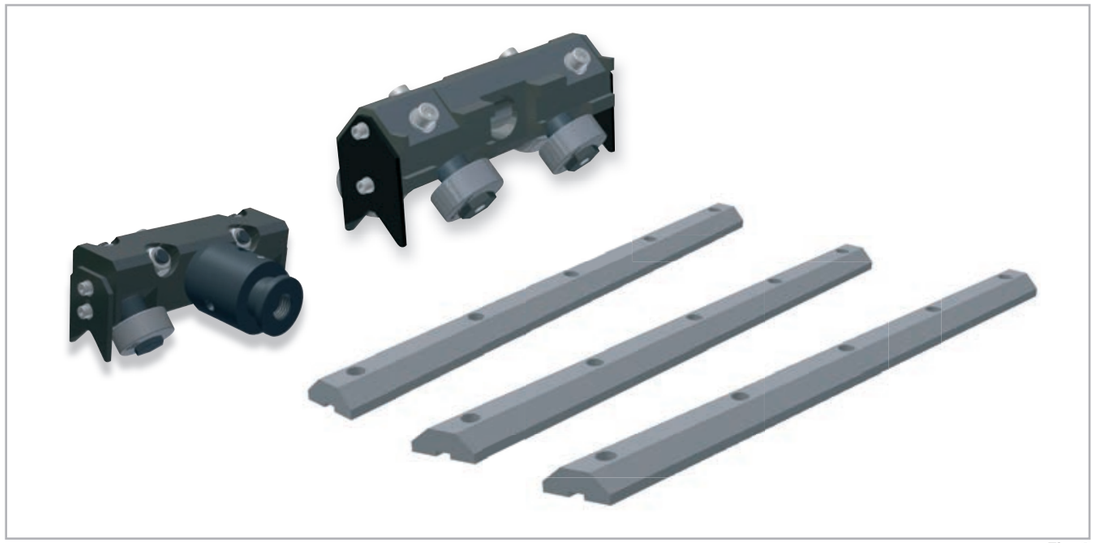

Fig. 8

Performance characteristics:

- Sizes available: 28,35 and 55 mm.
- Rollers dimensions: Ø30 - Ø40 - Ø52 - Ø62.
- V-shaped rollers in hardened C45 steel available for sizes 28 and 35.
- Aluminum sliders, floating and fixed, with 3, 4 or 6 rollers.
- Max. speed: 7 m/s (depending on application).
- Max. acceleration: 20 m/s² (depending on application).
- Max. radial load capacity: 15000 (per slider).
- Max. axial load capacity: 15000 (per slider).
- Operating temperature: from -10°C to +80°C.
- Induction hardened and polished rails.
- Max. rail length: 4100 mm.
- Steel assembly pins.

Notes:

- V-shaped roller with plastic compound shell are available upon request.
- Stainless steel pins and special variants are available upon request.
- Longer stroke achievable with joinable versions.
- V-shaped rails available in drilled or non-drilled versions.
- Please follow the diagrams in every slider section to ensure correct assembly.
- For applications with high projecting loads, the sliders' rollers must be adjusted so that the load is supported by the maximum possible number of them.

Product dimensions

Steel V-shaped rails

Material: high-performance alloy steel: R > 900 MPa

Hardened and tempered: core hardness 240 HB.

Induction-hardened and polished. Track hardness > 58 HRC

Guide rail 28.6x11 code 203.0012 has anti-oxidation coating.



Fig. 9

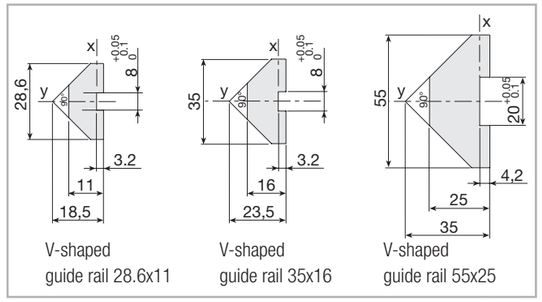

V-shaped guide rail 28.6x11 — V-shaped guide rail 35x16 — V-shaped guide rail 55x25

Fig. 10

Features	Moment of inertia Ix [mm4]	Moment of inertia Iy [mm4]	Weight [Kg/m]
28,6x11	2148	14490	2
35x16	7932	36405	3,5
55x25	41906	194636	7,8

Tab. 1

Machining: drilled guide rails with straight cut

P_ _ -.....F V-shaped guide rails, length L, **drilled**

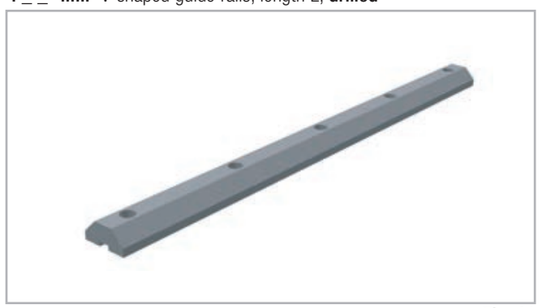

Fig. 11

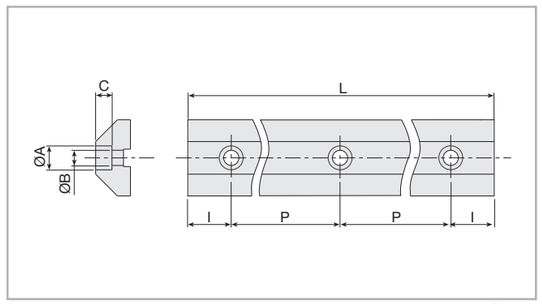

Fig. 12

Size	Treatment	L. max [mm]	P [mm]	I [mm]	A [mm]	B [mm]	C [mm]	Code
28,6x11	hardened anti-oxidation	3980	150	40	11	7	5	**P28...**
35x16	Induction-hardened	4100	100	50	11	7	7,5	**P35...**
55x25	Induction-hardened	4100	150	25	18	11	11,5	**P55...**

Tab. 2

Machining: drilled guide rails with 1 straight and 1 slanting cut

P_ _ -.....FX V-shaped guide rails with 1 slanting cut, length L, **drilled**



Fig. 13

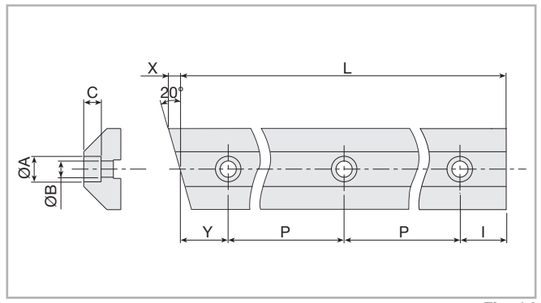

Fig. 14

Size	Treatment	L. max [mm]	P [mm]	Y [mm]	I [mm]	A [mm]	B [mm]	C [mm]	Code
28,6x11	hardened anti-oxidation	3700	150	50	50	11	7	5	**P28...**
35x16	Induction-hardened	4000	100	50	50	11	7	7,5	**P35...**
55x25	Induction-hardened	3950	150	25	25	18	11	11,5	**P55...**

Tab. 3

Machining: drilled guide rails with 2 slanting cuts

P_ _ -.....FXX V-shaped guide rails with 2 slanting cuts, length L, **drilled**



Fig. 15

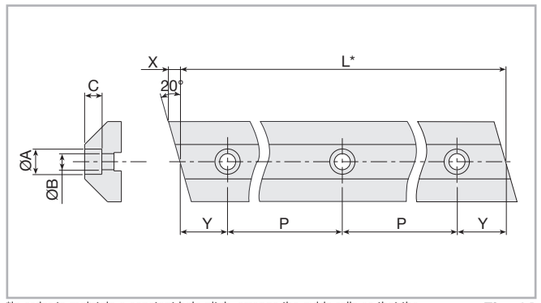

*in order to maintain a constant hole pitch, arrange the guide rails so that the length "L" is equal to: n•P + 2•Y

Fig. 16

Size	Treatment	L. max [mm]	P [mm]	Y [mm]	A [mm]	B [mm]	C [mm]	Code
28,6x11	hardened anti-oxidation	3700	150	50	11	7	5	**P28...**
35x16	Induction-hardened	3900	100	50	11	7	7,5	**P35...**
55x25	Induction-hardened	3950	150	25	17	11	11,5	**P55...**

Tab. 4

Roller slides

Ø40 roller slides with 3 rollers, aluminium alloy castings (Rs=280 N/mm2). Ø30, Ø40, Ø52 and Ø62 roller slides with 4 or 6 rollers, extruded aluminium alloy (Rs=310 N/mm2). Alloy steel pins (Rs=800 N/mm2) Rollers with double rows of angular contact ball bearings, long-life.

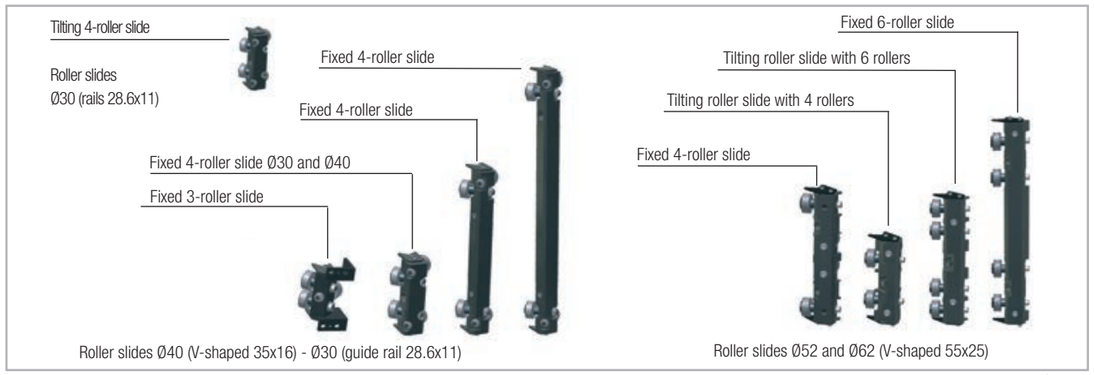

Fig. 17

Tilting roller slides with 4 rollers Ø30 for V-shaped guide rails 28.6x11

Use the roller slide eccentric pin to adjust the backlash along the plane between the guide rails.

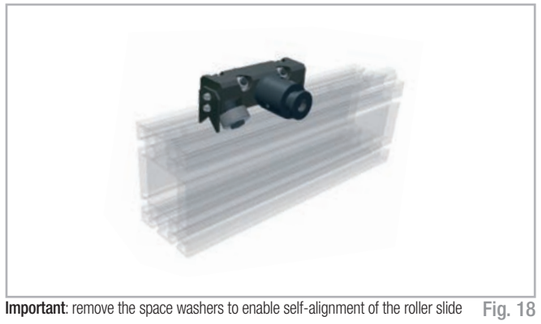

Important: remove the space washers to enable self-alignment of the roller slide

Fig. 18

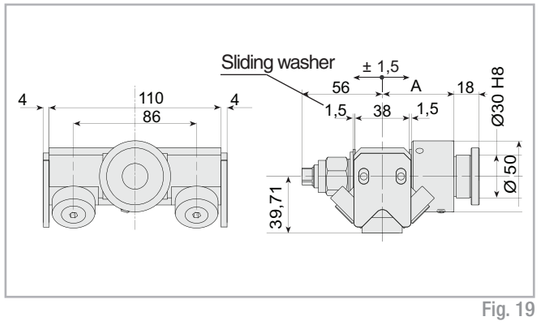

Fig. 19

	A [mm]	Load capacity [N]	Weight [Kg]	Code
Roller slide with concentric pin	75	3818	1,8	**204.0052**
Roller slide with excentric pin (±1 mm)	75	3818	1,8	**204.0053**
Roller slide with concentric pin	50	3818	1,4	**204.0054**
Roller slide with excentric pin (±1 mm)	50	3818	1,4	**204.0055**

Tab. 5

Spare parts	A [mm]	Code
Complete body with rollers		**204.0050**
Concentric pin	75	**236.0010**
Excentric pin (±1 mm)	75	**236.0011**
Concentric pin	50	**236.0014**
Excentric pin (±1 mm)	50	**236.0015**

Tab. 6

3-Roller slides Ø 40 for V-shaped guide rails 35x16

Please follow the diagrams below to ensure correct assembly. To make up for tolerances in the profile shapes, use pins to lock carriages with eccentric rollers after placing them in the appropriate position. (With the eccentric pins in the neutral position).

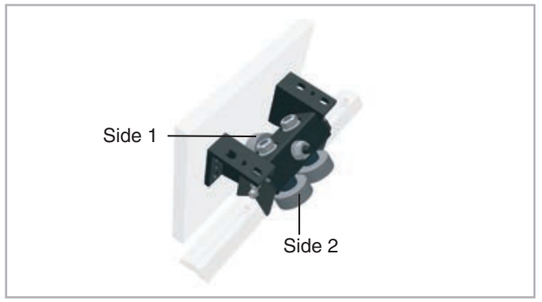

Fig. 20

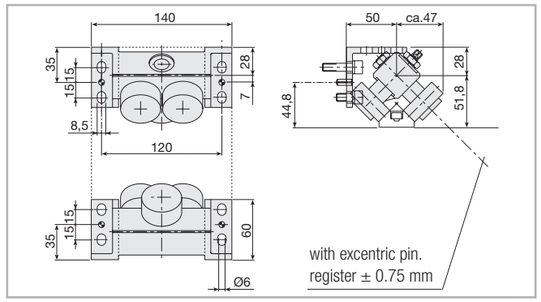

Fig. 21

Rollers side 1	Rollers side 2	Specification	Load capacity [N]	Weight [Kg]	Code
1 concentric	2 concentric	3-rollers carriage Ø40 - concentric	3535	1,3	**204.1579**
1 eccentric	2 concentric	3-rollers carriage Ø40 - 1 exc. side 1	3535	1,3	**204.0474**
2 concentric	1 concentric	3-rollers carriage Ø40 - concentric	3535	1,3	**204.2302**
2 concentric	1 eccentric	3-rollers carriage Ø40 - 1 exc. side 2	3535	1,3	**204.0475**

Tab. 7

Tilting roller slides with 4 rollers Ø40 for V-shaped guide rails 35x16

Use the roller slide eccentric pin to adjust the backlash along the plane between the guide rails.tino.

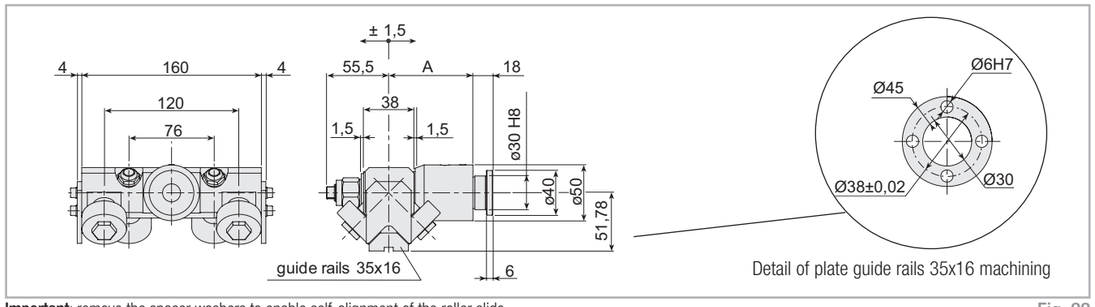

Important: remove the spacer washers to enable self-alignment of the roller slide

Fig. 22

	A [mm]	Load capacity [N]	Weight [Kg]	Code
Slide with eccentric pin (±1 mm)	75	7071	2,2	**204.0016**
Slide with eccentric pin (±1 mm)	50	7071	1,8	**204.0033**

Tab. 8

Spare parts	A [mm]	Code
Complete body with rollers		**204.0052**
Eccentric pin (±1 mm)	75	**204.0053**
Eccentric pin (±1 mm)	75	**204.0054**

Tab. 9

All pins are eccentric, but are made concentric by inserting the pin in the specific hole on the plate, in order to determine the required preload.

Fixed 4-roller slide Ø40 for V-shaped guide rails V 35x16

Use the roller slide eccentric pin to adjust the backlash along the plane between the guide rails.

Important: machine the pin clamping plate as shown in Fig. A

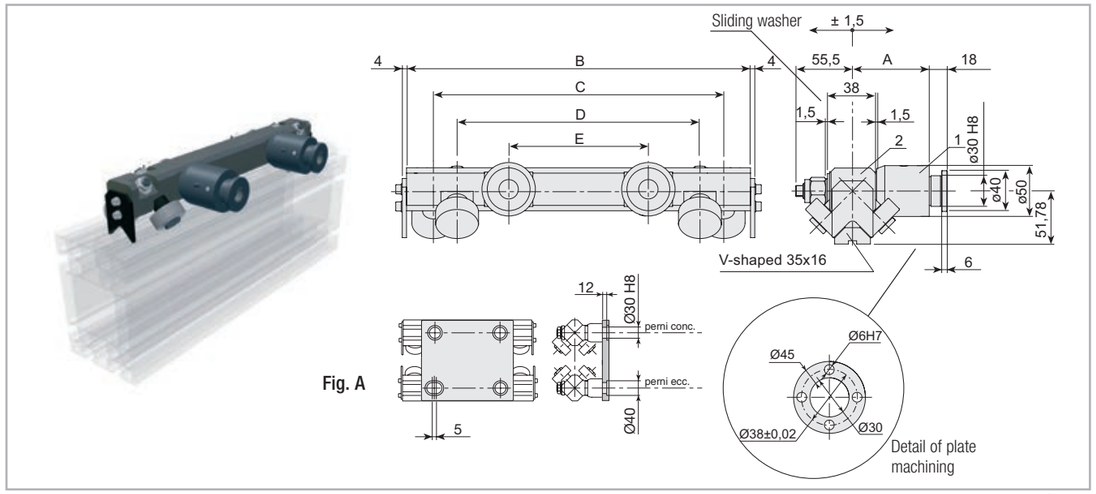

Fig. A

Important: remove the space washers to enable self-alignment of the roller slide sliding washers

Fig. 23

	A [mm]	Load capacity [N]	Code
R. slide L=370 complete with exc. pin (± 1 mm)	75	7071	**204.0018**
R. slide L=600 complete with exc. pin (± 1 mm)	75	7071	**204.0028**
R. slide L=370 complete with exc. pin (± 1 mm)	50	7071	**204.0031**
R. slide L=600 complete with exc. pin (± 1 mm)	50	7071	**204.0035**

Tab. 10

R. slide spare parts (2)	B [mm]	C [mm]	D [mm]	E [mm]	Code
Roller slide L= 370	370	320	276	180	**204.0002**
Roller slide L= 600	600	550	506	410	**204.0026**

Tab. 11

Pin spare parts (1)	A [mm]	Weight [Kg]	Codice
Eccentric pin (± 1 mm)	75	4.1	**204.0011**
Eccentric pin (± 1 mm)	50	3.5	**204.0015**

Tab. 12

E type roller slides (roller Ø52) and F type (roller Ø62) for V-shaped guide rails 55x25

4-Stiff Rollers slide. Suitable for mounting pin: Type 7-8

Use the roller slide eccentric pin to adjust the backlash along the plane between the guide rails.

Important: machine the pin clamping plate as shown in Fig. A

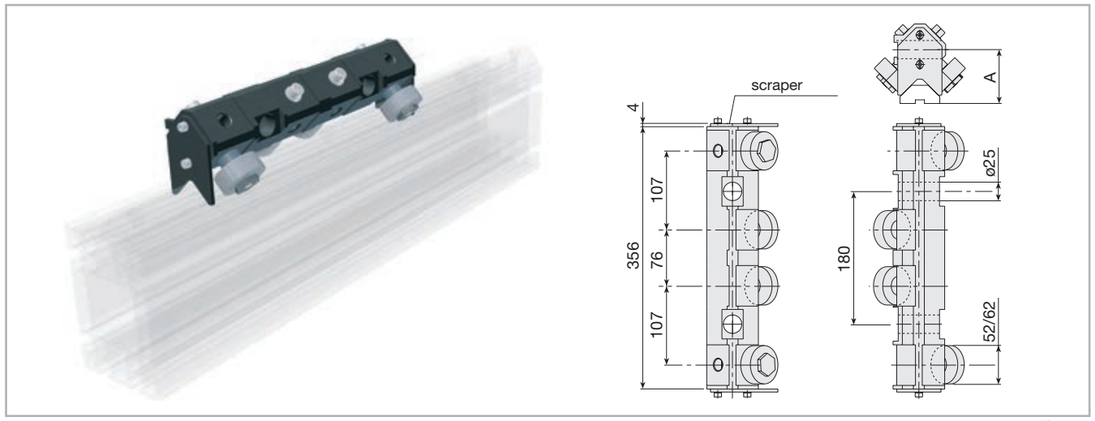

Fig. 24

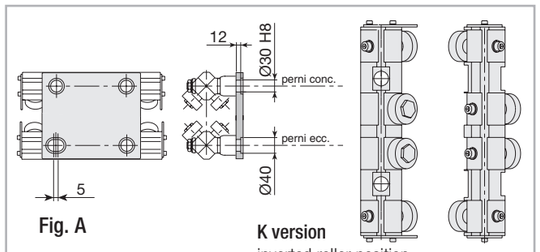

Fig. A

K version
inverted roller position

Fig. 25

Ø Rollers	A
Rollers Ø52	71,75
Rollers Ø62	78,85

Tab. 13

Technical caracteristics	Ø52	Ø62
Load capacity [N]	12021	14991
N° rollers	4	4
Weight [Kg]	4,6	5,2
Spare parts code	204.1518	204.1519

Tab. 14

Type G roller slides (roller Ø52) and H type (roller Ø62) for V-shaped guide rails 55x25

Tilting 4-roller slides Suitable for assembly pins: Type 9

Use the roller slide eccentric pin to adjust the backlash along the plane between the guide rails.

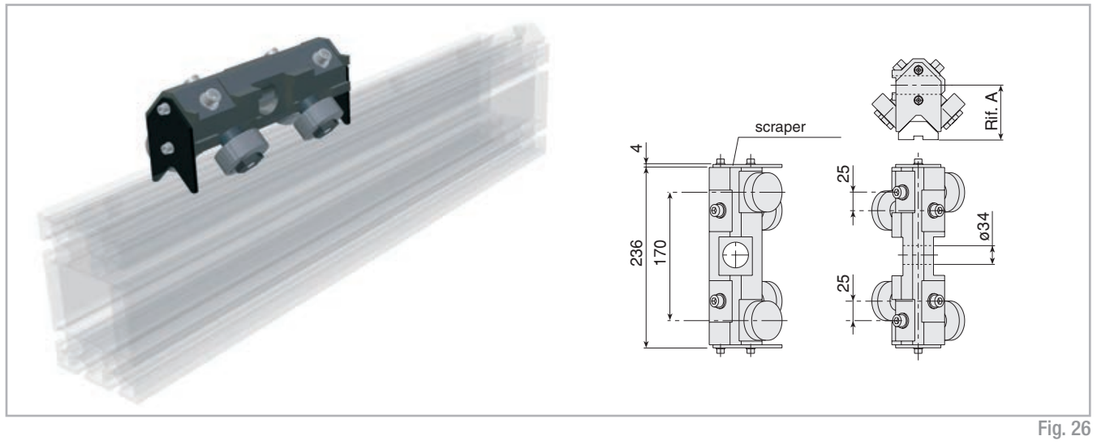

Fig. 26

Ø Rollers	A
Rollers Ø52	71,75
Rollers Ø62	78,85

Tab. 15

Technical caracteristics	Ø52	Ø62
Load capacity [N]	12021	14991
N° roller	4	4
Weight [Kg]	3,2	3,8
Spare parts code	204.1520	204.1521

Tab. 16

I-type roller slides (roller Ø52) and L-type (roller Ø62) for V-shaped guide rails V 55x25

Tilting 4-roller slides Suitable for assembly pins: Type 9

Use the roller slide eccentric pin to adjust the backlash along the plane between the guide rails.

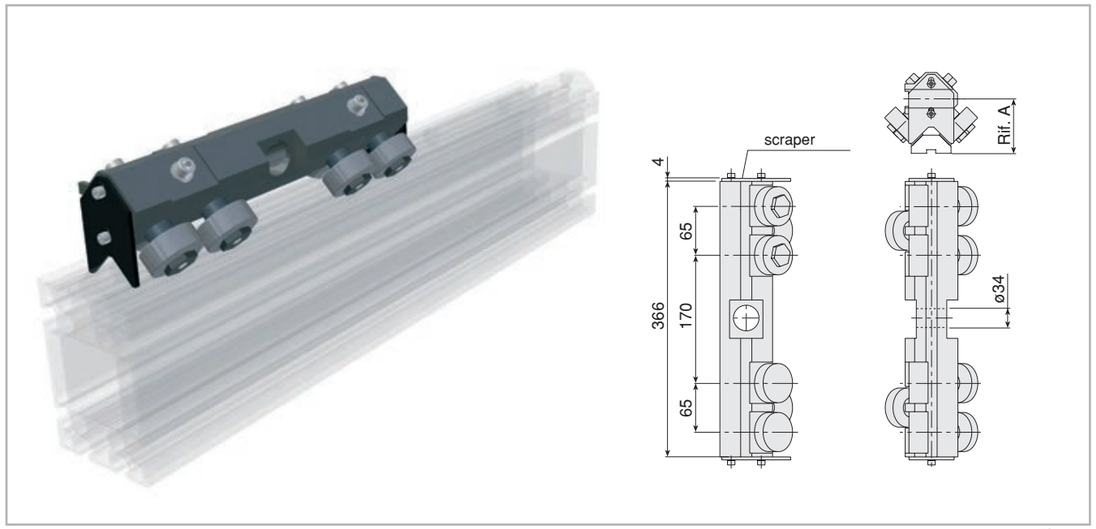

Fig. 27

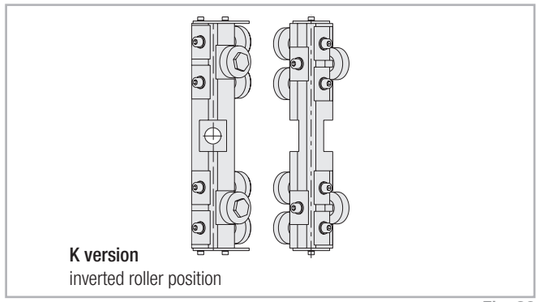

K version
inverted roller position

Fig. 28

Ø Roller	A
Roller Ø52	71,75
Roller Ø62	78,85

Tab. 17

Technical caracteristics	Ø52	Ø62
Load capacity [N]	12021	14991
N° rollers	6	6
Weight [Kg]	4,9	5,9
Spare parts code	204.1522	204.1523

Tab. 18

P-type roller slides (rollers Ø52) and Q-type (rollers Ø62) for V-shaped guide rails 55x25

Fixed 6-roller slides Suitable for assembly pins: Type 10-11-12
Use the roller slide eccentric pin to adjust the backlash along the plane between the guide rails.

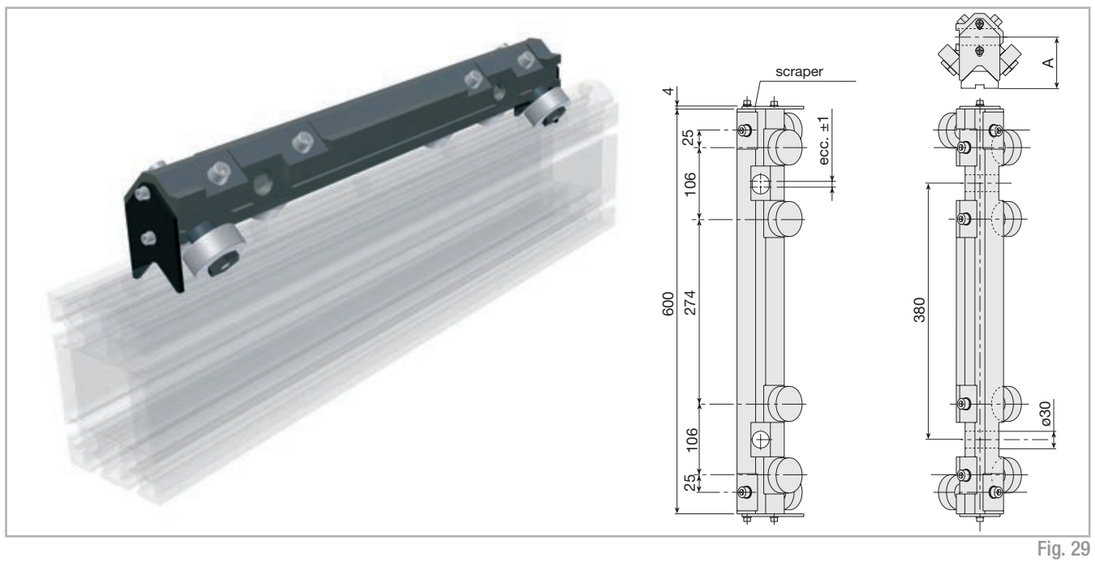

Fig. 29

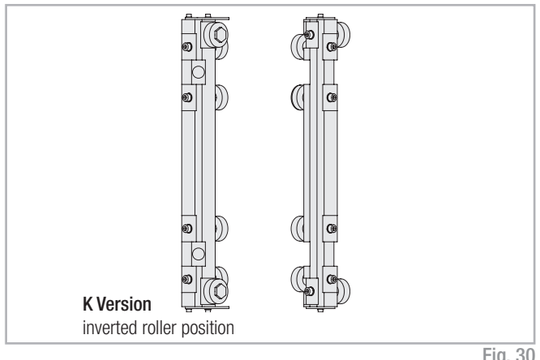

K Version
inverted roller position

Fig. 30

Technical caracteristics	Ø52	Ø62
Load capacity [N]	12021	14991
N° rollers	6	6
Weight [Kg]	4,9	5,9
Spare parts code	204.2086	204.2283

Tab. 19

Accessories

V-shaped rollers (Guide Rails 28.6 x 11) anti-oxidized version

Shaped rollers with radial bearings with 2RS sealing (medium version).

* **IMPORTANT**: upon request, spacers can be supplied to increase the centre-distance between the guide rail and the roller supporting surface. In addition to theroller code, please indicate the required centre-distance (L). e.g. 205.0013.L



Fig. 31

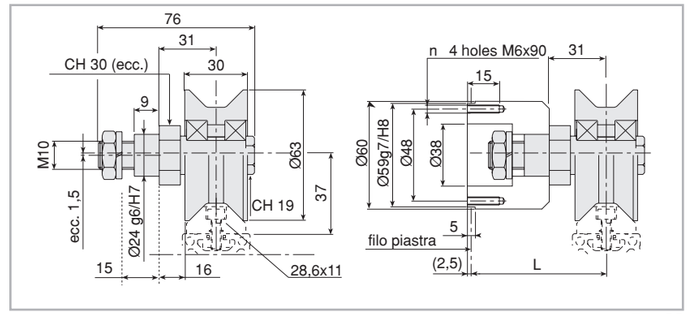

Fig. 32

Version	Type	Bearing	C (1cusc.)	Cw (2cusc.)	COw (2cusc.)	PR [N]	PA [N]	Speed [mm/s]	Weight [Kg]	Code
Medium	Conc.	radial bearing	7800	9600	4800	1400	600	2500	0,8	**205.0013**
Medium	Exc.	radial bearing	7800	9600	4800	1400	600	2500	0,8	**205.0014**

Tab. 20

V-shaped rollers [rails 35 x 16] integral

Shaped rollers with two rows of angular contact ball bearings. With bilateral sliding sealing rings. Accuracy class P6.
They support loads along the axis of the pin provided Pa eff < 0.4 Pr eff.

* **IMPORTANT**: upon request, spacers can be supplied to increase the centre-distance between the guide rail and the roller supporting surface. In addition to the roller code, please indicate the required centre-distance (L). e.g. 205.0011.L



Fig. 33

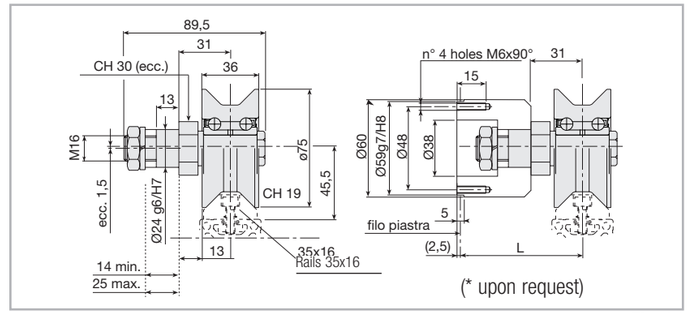

Fig. 34

Type	Bearing	C	COw (2cusc.)	PR [N]	PA [N]	Speed [mm/s]	Weight [Kg]	Code
Conc.	angular contact	21000	13900	4500	1800	2500	1	**205.0011**
Exc.	angular contact	21000	13900	4500	1800	2500	1	**205.0012**

Tab. 21

Spare roller with pin

Make sure that all the components are locked in place with the appropriate screws. The recommended tightening torque for pin locking screws and nuts is 50 Nm.



Fig. 35

Max. load factors for induction-hardened guides

Roller	Cw [N]	COw [N]	Fr amm. [N]	V max.
Ø30	5,100	3,100	1,350	7 m/s
Ø40	10,000	7,000	2,500	7 m/s
Ø52	16,700	12,300	4,250	6 m/s
Ø62	21,500	14,500	5,300	5 m/s

Tab. 22

Spare roller with pin	Weight [Kg]	Code
Ø30 Concentric	0,02	**406.0056**
Ø40 Excentric (± 0.75 mm)	0,25	**205.0163**
Ø52 Concentric	0,4	**205.0163**
Ø62 Concentric	0,55	**205.0165**

Tab. 23

Assembly Pins

Material: burnished steel (Rs=800 N/mm2). Special variants upon request. AISI 303 stainless steel versions are available upon request. Types 0-7-8-9 are complete with self-lubricating bushings to make roller slide self-adjustments easier.

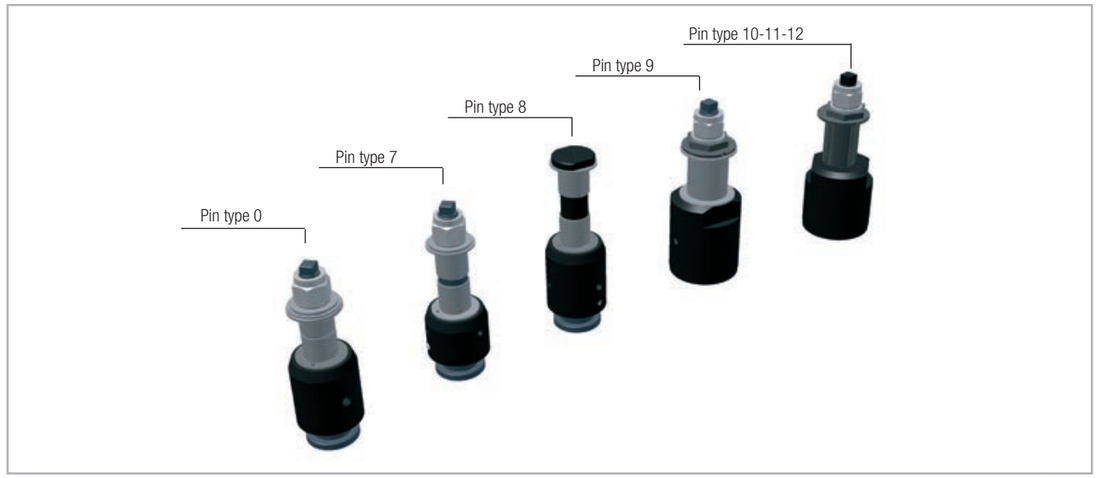

Fig. 36

Type 0 assembly pins suitable for roller slide Ø30 and Ø40

* **Important**: machine the pin clamping plate as shown in Fig. A

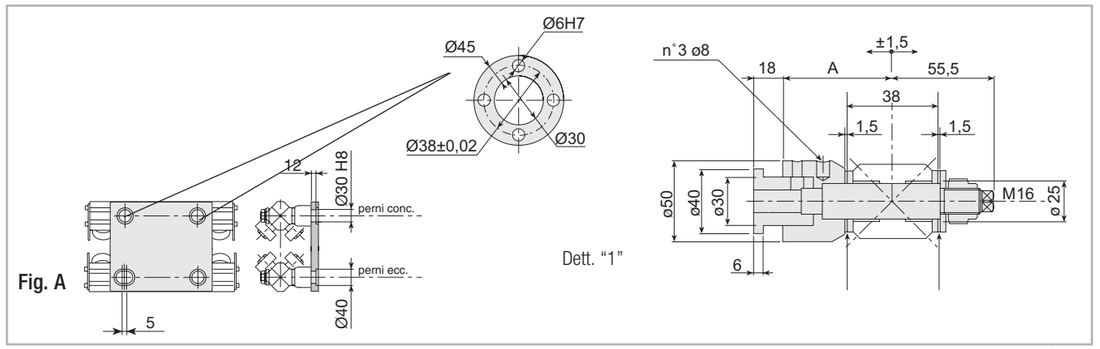

Fig. 37



Fig. 38

Important: remove the spacer washers to enable self-alignment of the roller slide

Technical caracteristics	A [mm]	
Weight [Kg]		1,1 approx.
Eccentric code (±0,75 mm)	75	236.0011
Eccentric code (±0,75 mm)	50	236.0015

Tab. 24

Type 7 assembly pins suitable for roller slide E-F

* **Important**: machine the pin clamping plate as shown in Fig. A

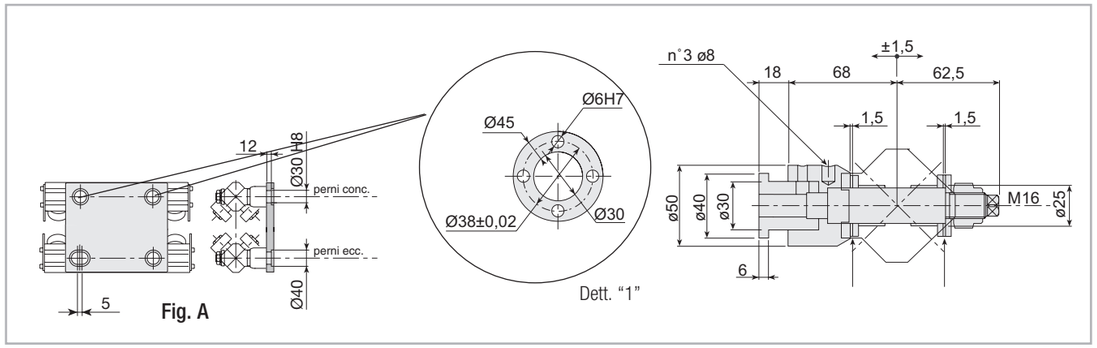

Fig. 39



Fig. 40

Important: remove the spacer washers to enable self-alignment of the roller slide

Technical caracteristics	
Weight [Kg]	1,1 circa
Eccentric code (± 1 mm)	236.1689

Tab. 25

Assembly pins type 8 suitable for carriage E-F

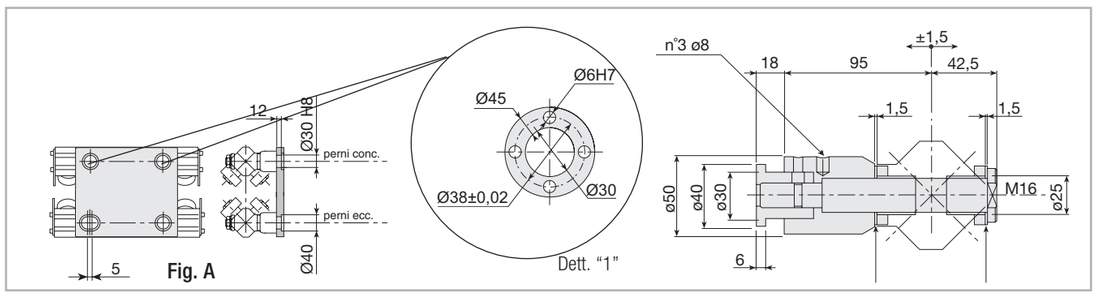

Fig. 41



Fig. 42

Important: remove the spacer washers to enable self-alignment of the roller slide

Technical caracteristics	
Weight [Kg]	1,8 approx.
Excentric code (±1 mm)	236.1691

Tab. 26

Type 9 assembly pins suitable for tilting roller slides G-H / I-L



Fig. 43

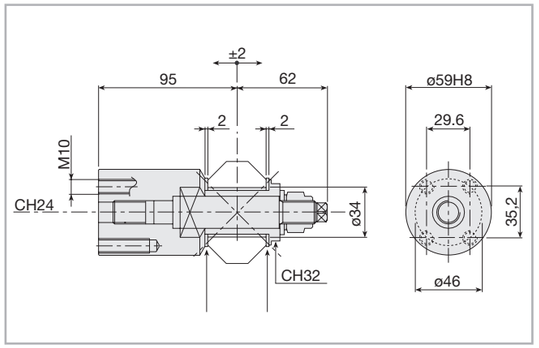

Fig. 44

Important: remove the spacer washers to enable self-alignment of the roller slide

Technical caracteristics	
Weight [Kg]	2 circa
Concentric code	236.2076
Excentric code (± 1,5 mm)	236.2079

Tab. 27

Type 10-11-12 assembly pins suitable for tilting roller slides P-Q



Fig. 45

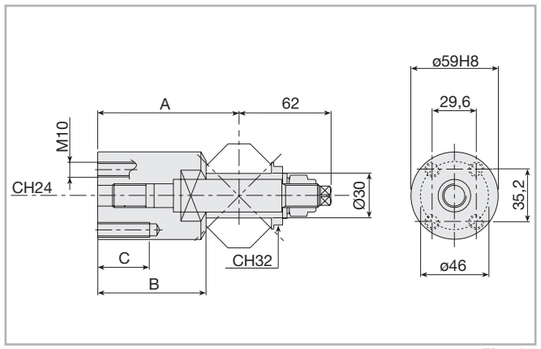

Fig. 46

Type	A [mm]	B [mm]	C [mm]	Weight [Kg]	Exc. code
					(±1,5 mm)
10	95	73	35	2	236.2083
11	87	65	27	1,8	236.2089

Tab. 28

V-shaped guide rail assembly inserts

Material: C40 galvanized steel.

A and C: suitable for medium profiles

B and D: suitable for load-bearing profiles

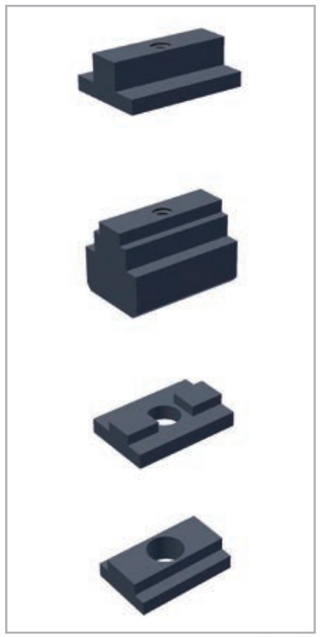

Fig. 47

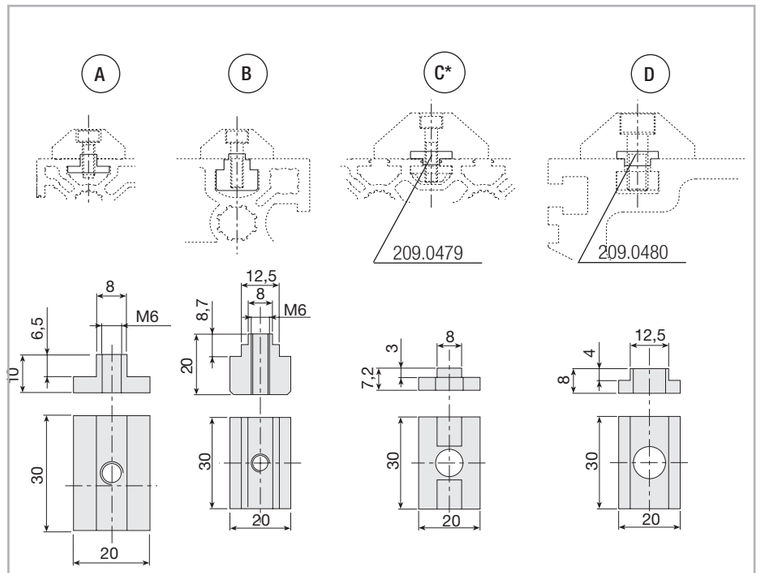

Fig. 48

* Special drilling for M8 screws instead of M10 is required.

Guide rails	Slot side	Screw	Code
A 35x16/28x11	8	M6x20	209.0298
B 35x16	12,5	M6x25	209.1855
C* 55x25	8	M8x30	209.0479
D 55x25	12,5	M10x30	209.0480

Tab. 29

Technical instructions

Rollers and V-shaped guide rails 28.6x11 and 35x16

Material: Hardened and burnished C45 steel covering; burnished steel pins and bolts. Rollers with shaped plastic cover are available upon request.

Rollers with longer centre-distance L can be supplied.

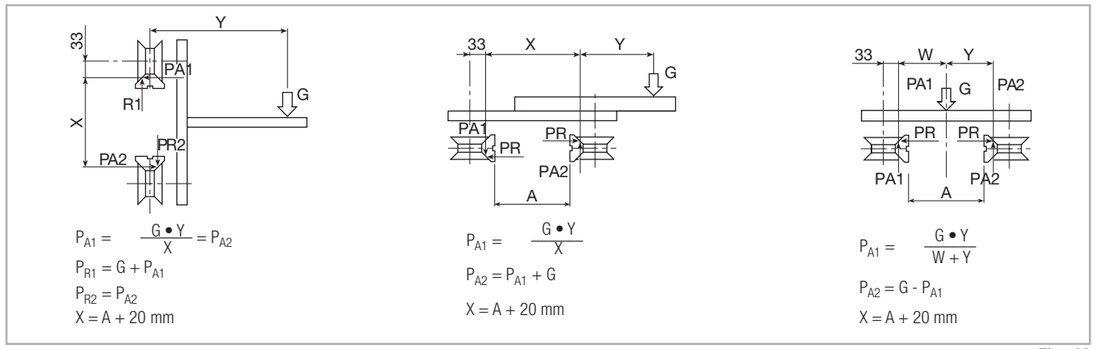

Fig. 49

Application diagram common to 2-roller slides

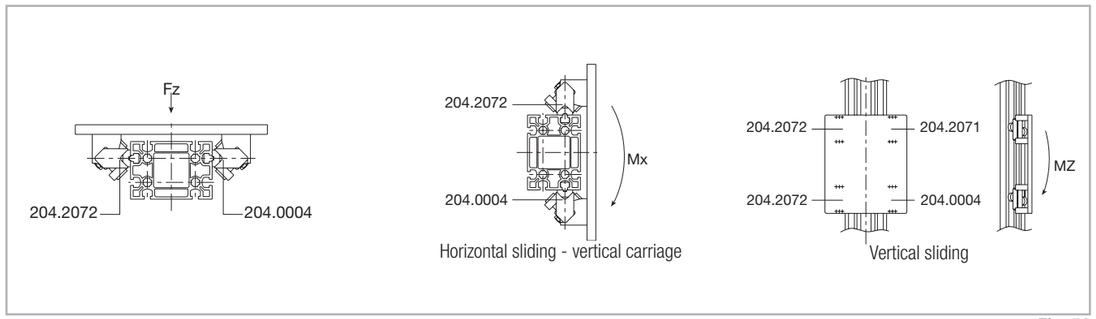

Fig. 50

Application diagram common to 3-roller slides

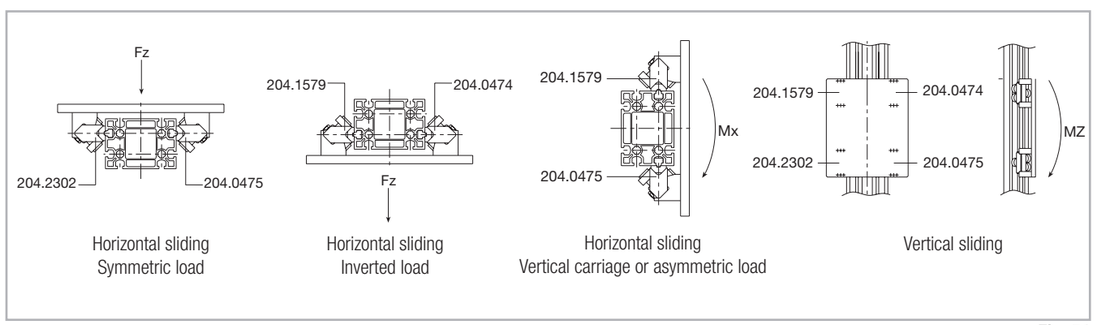

Fig. 51

Ordering key

Identification codes for Prismatic Rail guide

P	35 28 35 55	-	1100	F	XX X = Single slanting cut XX w= Double slanting cut	
						Drilled
			Length			
	Size					
Linear guides series Prismatic Rail						

Assembly of standard carriages / K version carriages

IMPORTANT: for applications with high projecting loads, the rollers of the slides must be adjusted so that the load is supported by the maximum possible number of rollers. If this means arranging the rollers symmetrically with respect to the standard roller slide version, please add the letter K at the end of the code when filling in the order form. However, the roller assembly can also be inverted at a later date, by disassembling the pins and rollers and then reassembling them in the opposite way.

Example:

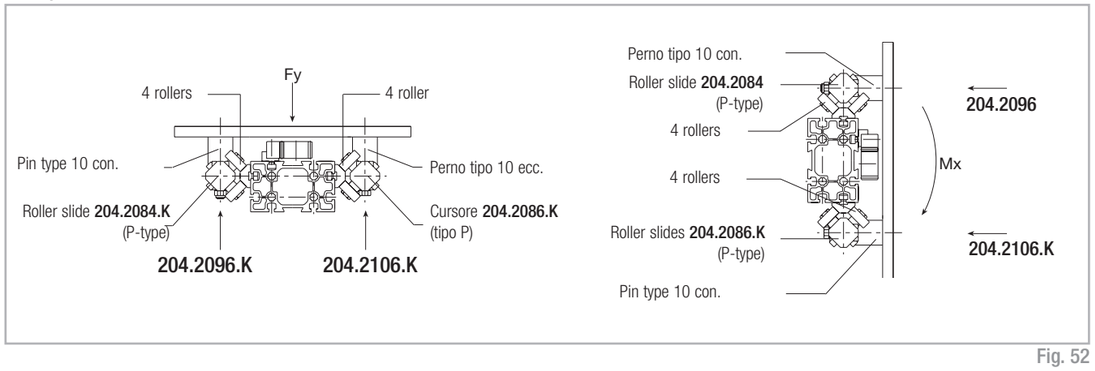

Fig. 52

Notes

ROLLON®
BY TIMKEN

Speedy Rail



Introduction

The product:

Speedy Rail® beam is a heat-treated aluminium alloy profile with hollow cross-sections which makes it very strong under torsion and deflection stresses.
Beams are then subject to a special patented treatment which provides a smooth, hard (700 HV) surface comparable to tempered steel. The fusion point of the non-stick surface layer (2100°C) permits an excellent resistance to welding splatters.
For these reasons the **Speedy Rail®** beams and components are widely used in the automotive industry to build transfer systems (lift & carry) for automated welding lines.

Many quantities of car bodies during the welding operations are moved by **Speedy Rail®** linear systems.
One of the most successfully feature of Rollon lines is that it is practically "maintenance free".

Features and user benefits:

- Wide range of linear transport applications
- Standard modular components
- All parts reusable
- Minimum space required
- Narrow profile
- Hard surface
- Resistance to welding splatters
- Quiet smooth operations
- Resistance to high corrosion
- Easy to assemble
- Saving in assembly time
- Strong, lightweight
- Savings in reducing drive size
- Only hand tools required to assemble or modify

Speedy Rail® linear motion systems are lightweight, self-supporting, easy to assemble, inexpensive, modular, clean, quiet and ex stock. **Speedy Rail®** assemblies are very simple. Standard bolted dovetails and fishplate clamps are used for end to end joining. Rails are available in single beam up to max length 7.5 meters – 24.6 feet – and can be joined end-to-end with dovetails to build a transfer system of unlimited length. Rails have a dovetail groove on each side to accommodate any fixture. In this way it is not necessary to drill or to weld.

The profiles Wide Body SR 180, Super Wide Body SR 250 are equipped with grooves and have a planarity precision so that guideways can be fixed without any mechanical machining.

Application fields:

- Automotive assembly
- Woodworking and furniture
- Glass processing
- Tire industry
- Painting lines
- Food industry
- Sheet working and laser cut machines
- Plastic extrusion, machine tools
- Appliances assembly and production
- Electronics
- Print, slitter machines
- Cardboard handling machines
- Industrial cleaning
- Packaging
- Tiles, shingles production
- Sportive equipment
- Welding lines
- Overhead transfers and panels handling
- Overhead pick-up and transfer, packaging
- Line of 6/10 stations for tire production
- Multi axis for paint-gun movement
- Cartesian water cutting systems, packaging
- Feeding and scavenging systems
- Rails for protections, tool change system
- Frame and body welding
- Card transfer and dip-in chemical solution tray
- Palletizing, print head replacement
- Palletizers
- Overhead lines with pick-up and transfer
- Palletizers, shrink-wrap machines
- Production transfers
- Guides for target in the shooting, linear sliding for athletic equipment
- Textiles, pharmaceuticals, steel coil processing, etc.
- And more

Dimensions

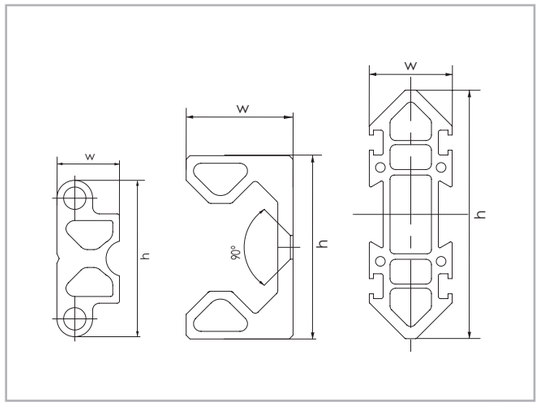

Fig. 1

Speedy Rail® guides are available in the following sizes:

Type	h [mm]	w [mm]
Speedy Rail 35	35	14
Speedy Rail C 48	48	28
Speedy Rail Mini	60	20
Speedy Rail Middle	90	30
Speedy Rail Standard	120	40
Speedy Rail Wide Body	180	60
Speedy Rail Super Wide Body	250	80

Tab. 1

Rollers and roller assemblies:

The **Speedy Rail®** range includes a large selection of rollers both cylindrical and "V" shaped and roller assemblies with two or more rollers. Our rollers are covered by a sintered plastic compound, resistant to pollutants and virtually maintenance-free. Ball and/or needle bearings with high performance are mounted into the rollers and can be maintained either with standard greasing procedure or lifetime lubricated. All roller boxes are equipped with concentric and eccentric pins for a quick adjustment of the contact between rollers and rail.

- Standard
  with 2 rollers, 1 concentric and 1 eccentric
- Blindo Beam®
  with 4 or 8 rollers. It provides 3 mounting surfaces
- Compact
  with 2 rollers. Suitable for low clearances and limited operation room
- Floating
  with 4, 6 or even more rollers. Suitable for the withstanding minor misalignments on the rail mounted in pairs, one concentric and one eccentric
- "V" roller support
  This kind of support are suggested for light applications and constricted operation areas

Supports are mounted on the frame when the rail is movable and on the trolleys when it is fixed. By the calculation of system needs, consider the max. radial load applicable to the rollers in accordance with the description of each roller.

Measurement units

Conversion tables

	English to metric			Metric to english		
	Unit	Symbol	Value	Unit	Symbol	Value
Length unit	inch	in	25.4 mm	millimeter	mm	0.039 in
	foot	ft	0.3 m	meter	m	3.3 ft
	yard	yd	0.91 m	meter	m	1.1 yd
	mile	mi	1.6 Km	kilometer	km	0.6 ml
Surface unit	square inch	in^2	6.5 cm^2	square centimeter	cm^2	0.16 in^2
	square foot	ft^2	929 cm^2	square meter	m^2	11 ft^2
	square yard	yd^2	0.83 m^2	square meter	m^2	1.2 yd^2
Volume unit	cubic inch	in^3	16.4 cm^3	cubic centimeter	cm^3	0.06 in^3
	cubic foot	ft^3	0.027 m^3	cubic meter	m^3	35 ft^3
	cubic yard	yd^3	0.765 m^3	cubic meter	m^3	1.3 yd^3
Capacity unit	US gallon	gal usa	3.78 l	litre	l	0.264 gal usa
	Imperial gallon	gal uk	4.54 l	litre	l	0.220 gal uk
Mass unit	ounce	oz	28.35 g	gram	g	0.035 oz
	pound	lb	0.453 kg	kilogram	kg	2.204 lb
Power unit	horse power uk	bhp	0.745 kW	kilowatt	kW	1.341 bhp
	foot-pound	lbf ft/s	745 W	Watt	lbf ft/s	745 W
	horse power uk	bhp	1.01 CV	horse power	CV	0.986 bhp
Speed unit	foot per second	ft/s	0.305 m/s	meter per second	m/s	3.278 ft/s
Force unit	pound-force	lbf	4.448 N	Newton	N	0.224 lbf
Mechanical moment unit	inch-pound	lbf in	0.112 Nm	Newton-meter	Nm	8.856 lbf in
	foot-pound	lbf ft	1.355 Nm	Newton-meter	Nm	0.738 lbf ft
Pressure unit	pound-force/square inch	psi	6894.7 Pa	Pascal	Pa	0.00015 psi
Lineic weight unit	pound per foot	lb/ft	14.593 N/m	Newton per meter	N/m	0.0685 lb/ft
Frequency unit	cycles per second	cps	1 Hz	Hertz	Hz	1 cps
Energy unit	British thermal unit	Btu	1055.06 J	Joule	J	0.00094 Btu
	foot-pound	lbf ft	1.355 J	Joule	J	0.738 lbf ft

Tab. 2

Thermodynamic scales

Description	Symbol	tC	tF	tK
temp. Celsius	tC	1	5/9 (tF-32)	tK-273.15
temp. Fahrenheit	tF	9/5 tC+32	1	9/5 tK-459.67
temp. Kelvin	tK	tC+273.15	5/9 tF+255.37	1

Tab. 3

Speedy Rail 35

"Speedy Rail 35" guide and specification

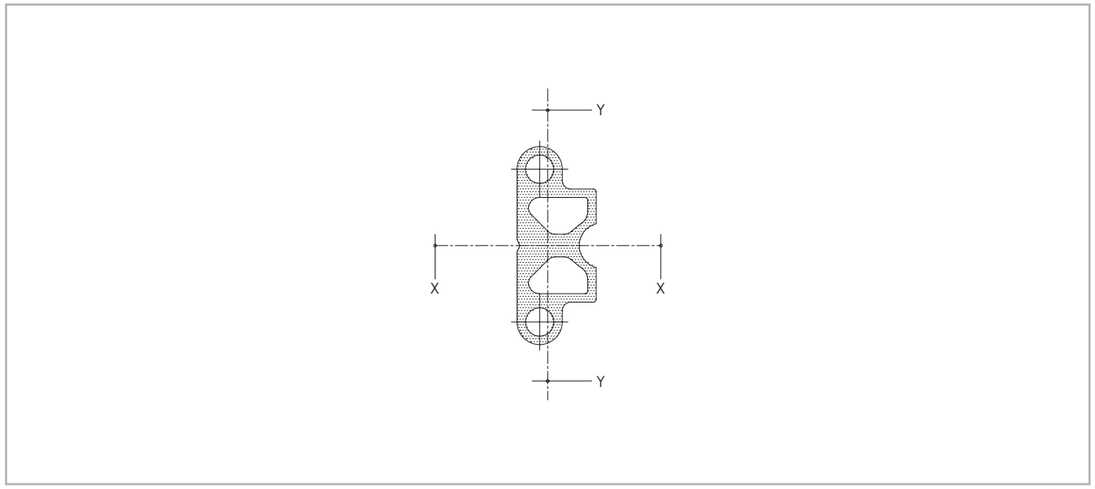

Fig. 2

Surface quadratic moments: X-X axis = 17.779 mm4 / Y-Y AXIS = 3.665 mm4.

Area = 222 mm2

Max. angular distorsion = ±20'/m.

Linear mass = 0.55 Kg/m.

Max. Linear distorsion = 0.5 mm/m.

Standard lengths: 1000-1500-2000-2500-3000-3500-4000-4500 mm.

External surface: deep hard anodizing

"Speedy Rail 35" assemblies and components

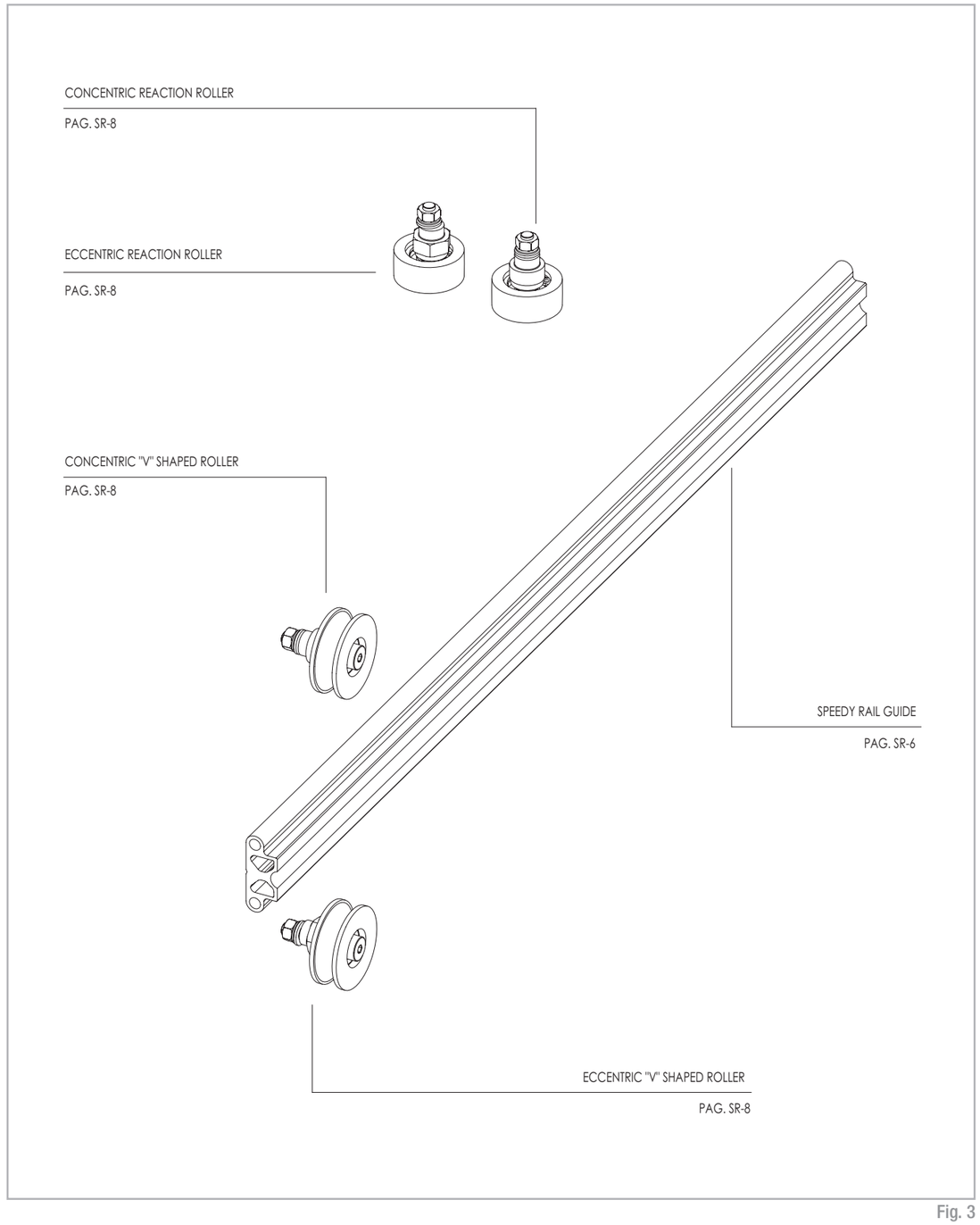

Fig. 3

Speedy Rail guide with plain ends - Order code 411.1400/length in mm.

SIMP - T

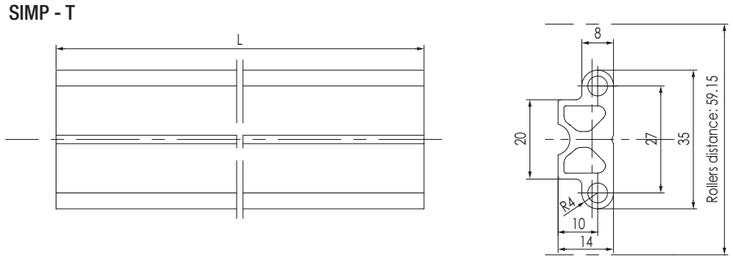

Fig. 4

Drilled Speedy Rail 35 guide - Order code 411.1405/length in mm.

SIMP - F

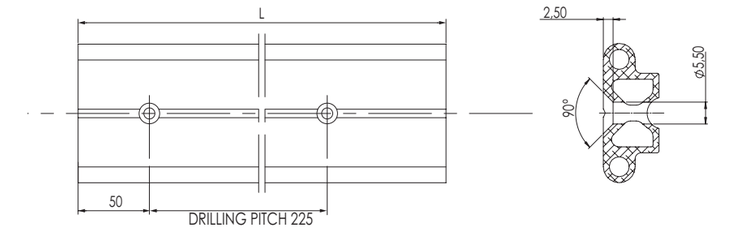

Fig. 5

Plastic compound eccentric roller,
max load: radial 200 N, axial 100 N

ROL-E034VC-B

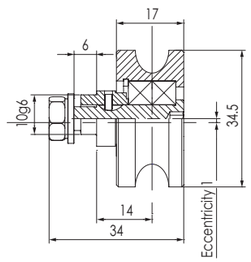

Fig. 6

Plastic compound concentric roller,
max load: radial 200 N axial 100 N

ROL-C034VC-B

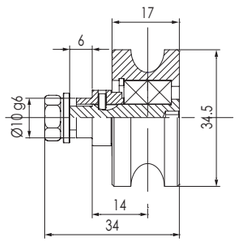

Fig. 7

Plastic compound concentric contrast roller,
max radial load 200 N

ROL-C030CC-B

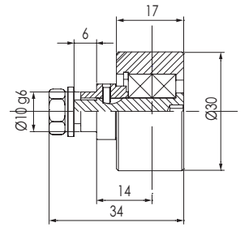

Fig. 8

Plastic compound eccentric contrast roller,
max radial load 200 N

ROL-E030CC-B

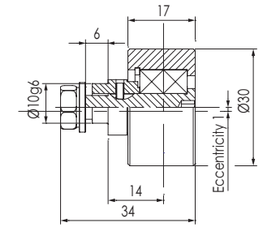

Fig. 9

Sliding doors "Speedy Rail 35" application example

Overturning locking upper rollers
Supporting lower rollers

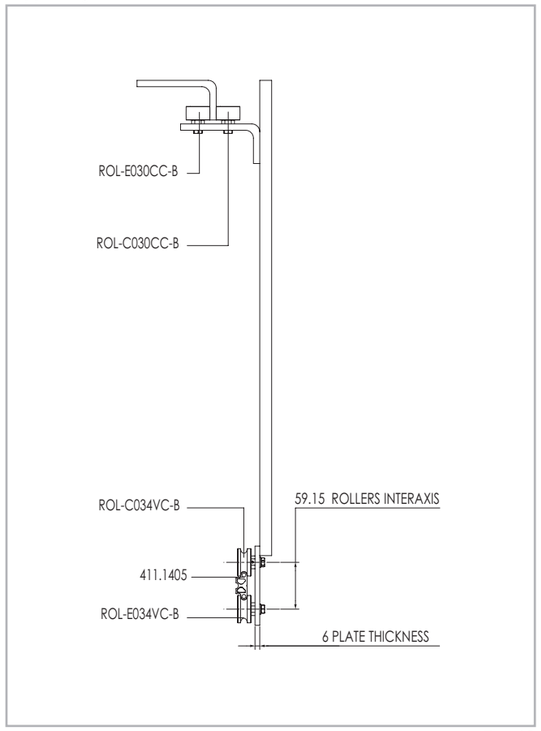

Fig. 10

S
R

Speedy Rail C 48

"Speedy Rail C 48" guide and specification

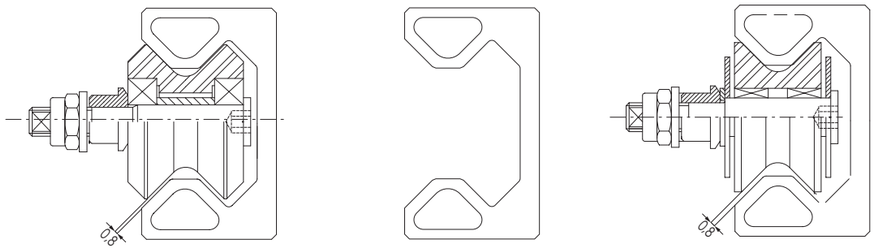

Fig. 11

"Speedy Rail C 48" guide

Material: alluminium alloy with hardened surface (700 Hv)

Surface quadratic moments: "I" XX AXIS= 152.026 mm4 "I" YY AXIS= 36.823 mm4

Section modules: W (X) = 6334 mm3 / W (Y)= 2045 mm3

Distance betweeen the centre line of opposite rolling lanes: 28,86 mm

Linear mass = 1,42 kg/m.

Max. Angular distorsion = ±20'/m max.

Max. linear distorsion = ±0,4 mm/m. Max.

Standard lenghts: 500-1000-1500-2000-2500-3000-3500-4000-4500-5000-5500-6000-6500-7000-7500 mm.

Exterior treatment: deep hard anodizing

Rollers

Supported by ball or needle bearings. The external surface is finished with plastic compound

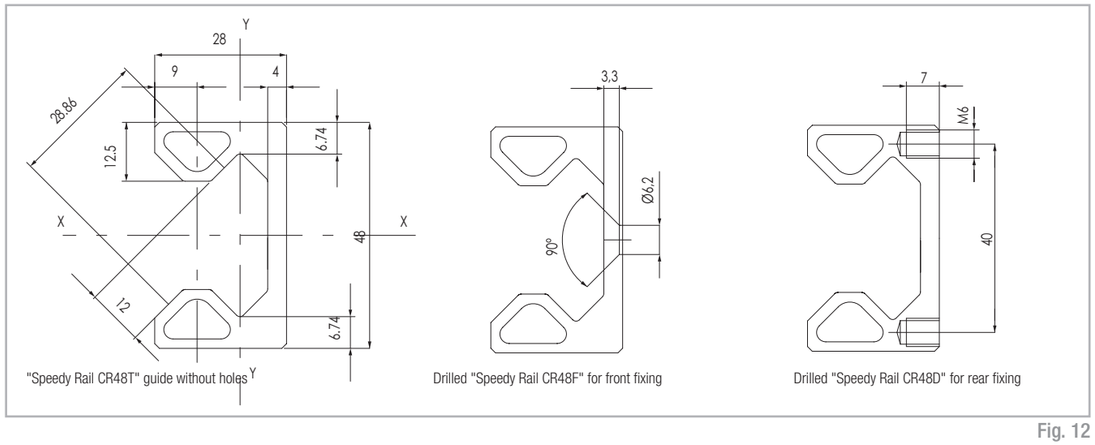

Fig. 12

"Speedy Rail C 48" assemblies and components

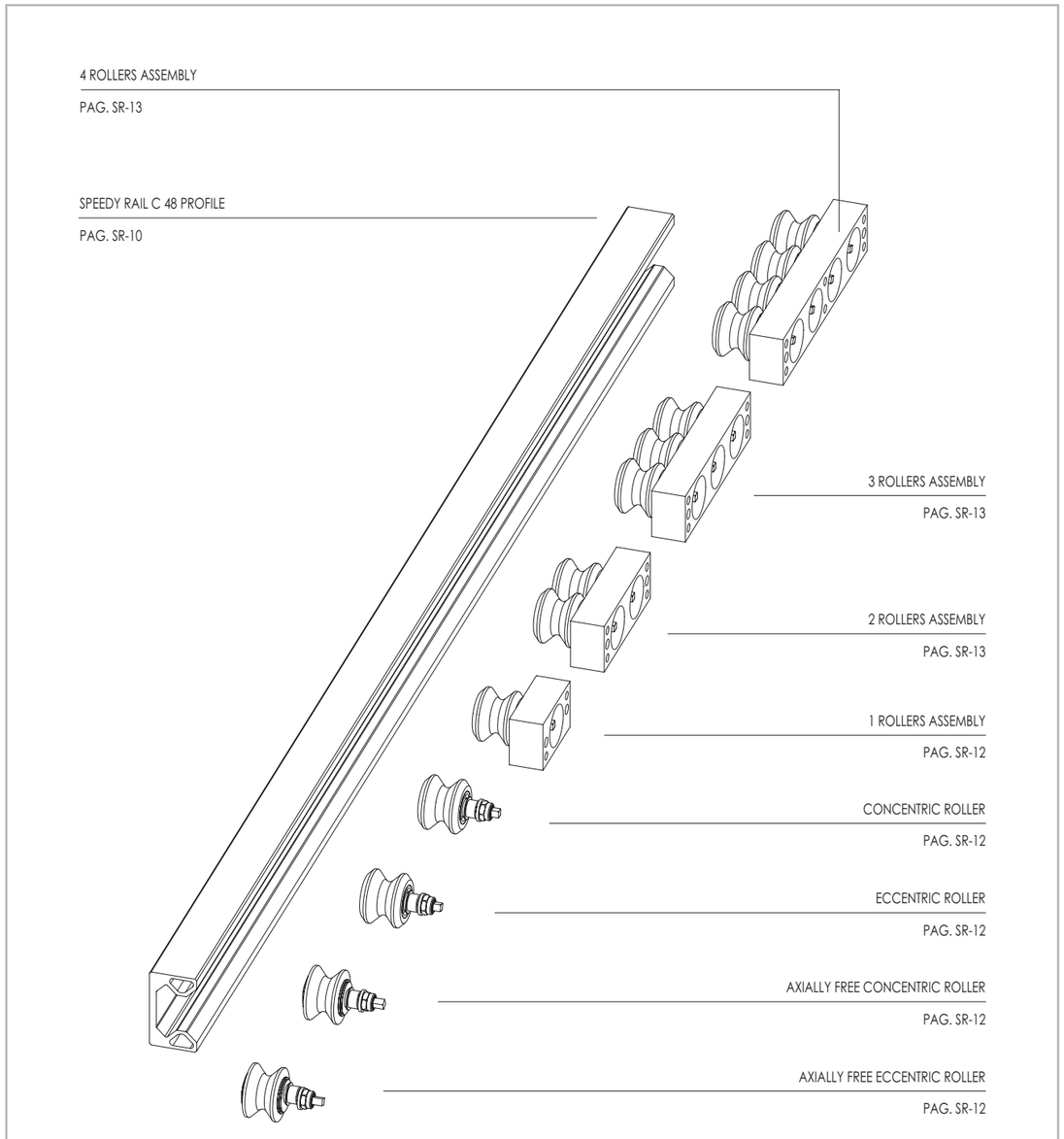

Fig. 13

Rollers and roller boxes for "Speedy Rail C 48" guide

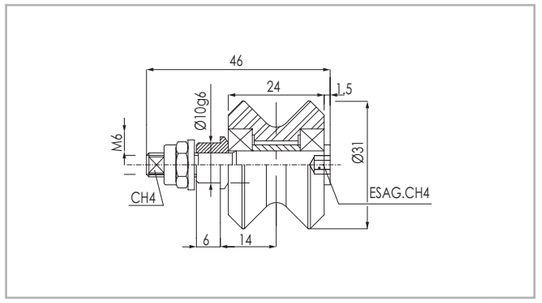

Fig. 14

ROL-C031WC-X - Axially constrained concentric roller
ROL-E031WC-B - Axially constrained eccentric roller (ecc. max. 1.4 mm)
Max radial load 270 N - max axial load 100 N

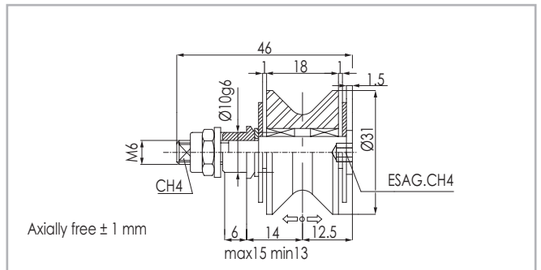

Fig. 15

ROL-C031VC-XA - Axially free concentric roller
ROL-E031VC-BA - Axially free eccentric roller (ecc. max. 1.4 mm)
Max radial load 270 N - it doesn't accept axial load

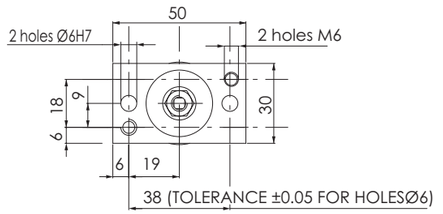

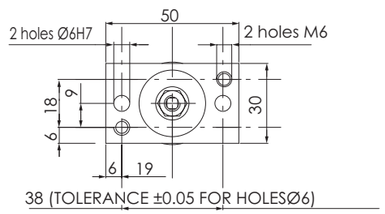

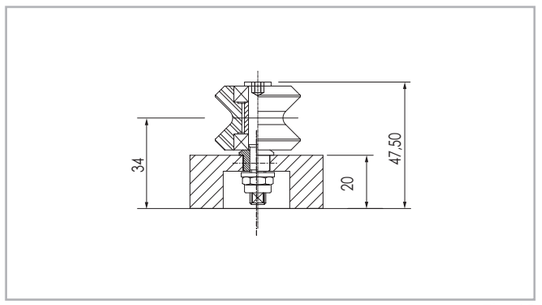

Fig. 16

55.1062 - Roller assembly with one conc. roller
55.1067 - Roller assembly with one ecc. roller
Max. Load per roller: radial 270 N / axial 100 N

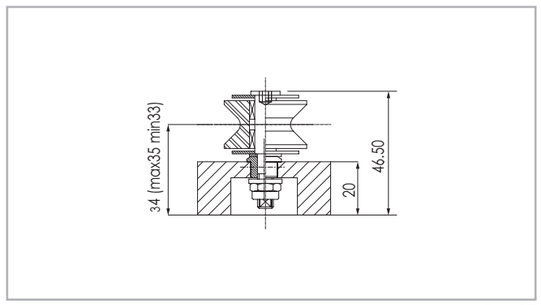

Fig. 17

55.1066 - Roller assembly with one conc. axial free roller
55.1065 - Roller assembly with one ecc. axial free roller
Max. Load per roller: radial 270 N
No axial loading

Roller boxes for "Speedy Rail C 48" guide

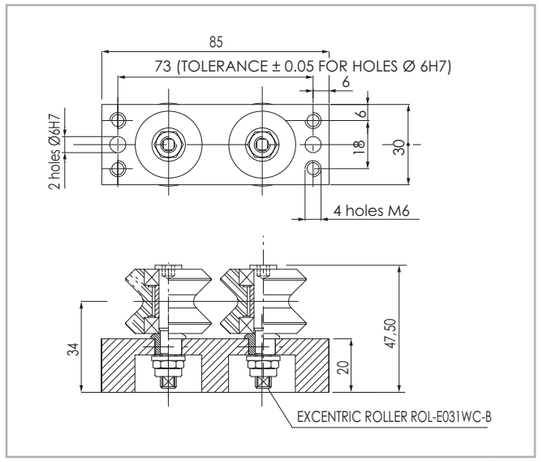

Fig. 18

55.1061 - Roller assembly with one concentric and one excentric roller
Max. load per roller: radial 270 N / axial 100 N

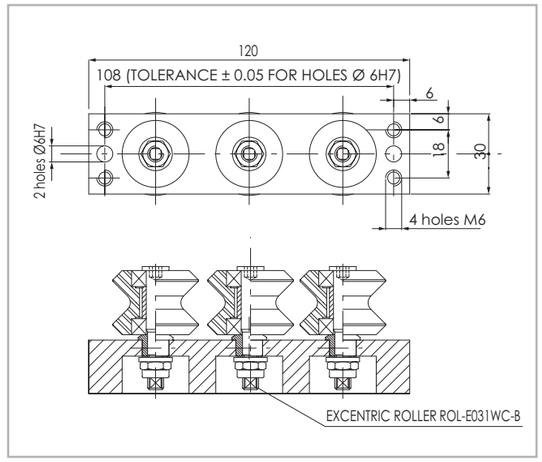

Fig. 19

55.1060 - Roller assembly with two concentric rollers and one excentric roller
Max. load per roller: radial 270 N / axial 100 N

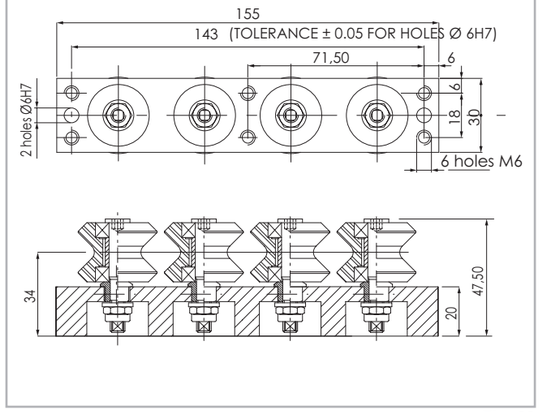

Fig. 20

55.1064 - Roller assembly with 4 rollers, 3 conc. and 1 ecc.
Max. load per roller: radial 270 N / axial 100 N

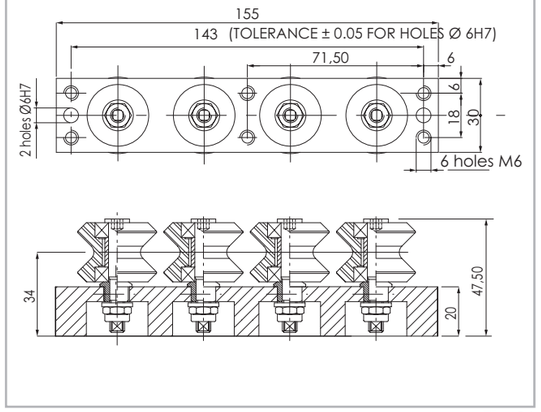

Fig. 21

55.1069 - Roller assembly with 4 rollers, 2 conc. and 2 ecc.
Max. load per roller: radial 270 N / axial 100 N

On roller assemblies with 2-3-4 rollers it is possible to have different solutions (axial constrained, axial free, concentric and eccentric rollers).

Speedy Rail 60

"Speedy Rail Mini" guide and specification

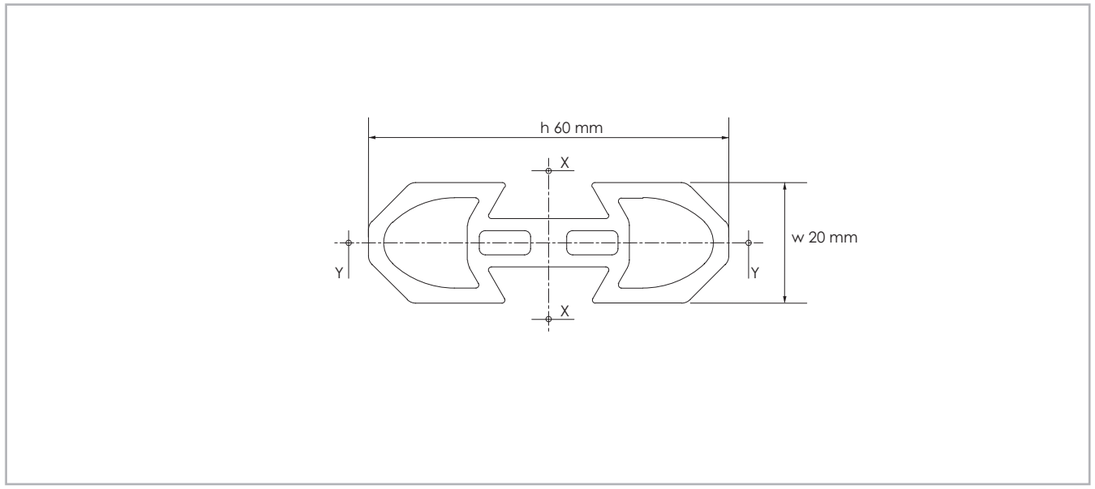

Fig. 22

Surface quadratic moments: X-X axis = 138.600 mm4 / Y-Y axis = 18.000 mm4.

Max. manufacturing tolerances = ±0.15 mm across opposite rolling surfaces.

Max. angular distorsion = ±20'/m.

Linear mass = 1.27 Kg/m.

Max. linear distorsion = ±0.4 mm/m.

Standard lengths: 1000-1500-2000-2500-3000-3500-4000-4500-5000-5500-6000-6500-7000 mm.

Ext. surface: deep hard anodizing

"Speedy Rail Mini" roller assemblies and components

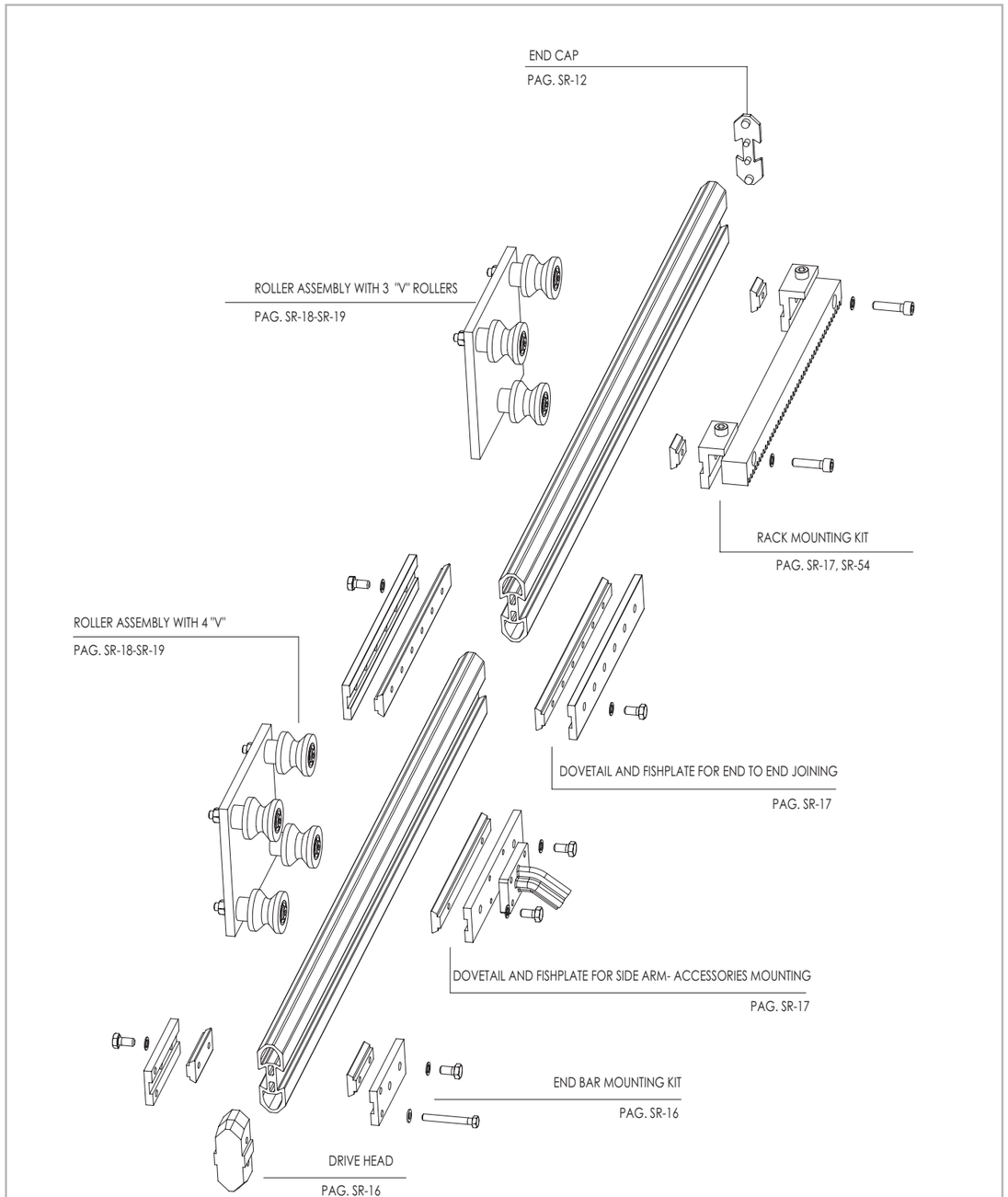

Fig. 23

"Speedy Rail Mini" guide and components

Mini speedy rail with plain ends - Order code 411.0764 / length in mm.

SR060 - T

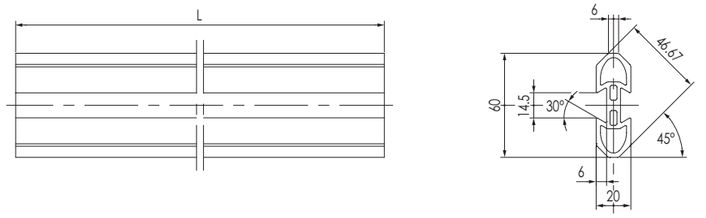

Fig. 24

Mini speedy rail with drilled ends
Order code 411.0765 / length in mm.

SR060 -F

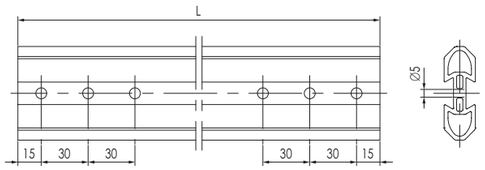

Fig. 25

Nota: drillings on the guide end are required as a safety measure with end-to-end joining in moving rails.
See technical note on page SR-69

Fishplate for drive head

411.0767

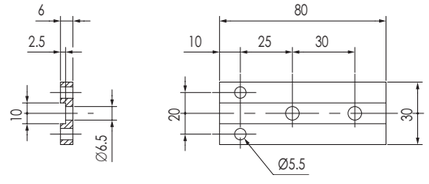

Fig. 26

M6 allen round head screw

411.0775

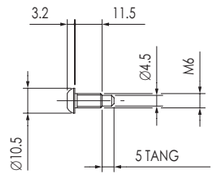

Fig. 27

Drive head

411.0776

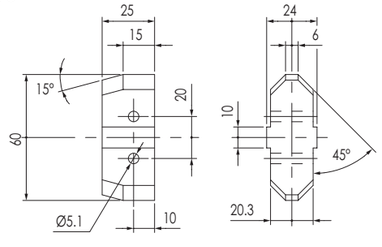

Fig. 28

End cap

411.0739

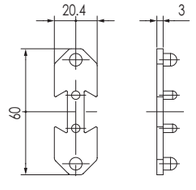

Fig. 29

Bolt for drive head mount

411.0818

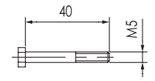

Fig. 30

Dovetail clamps and fishplates

Fishplate

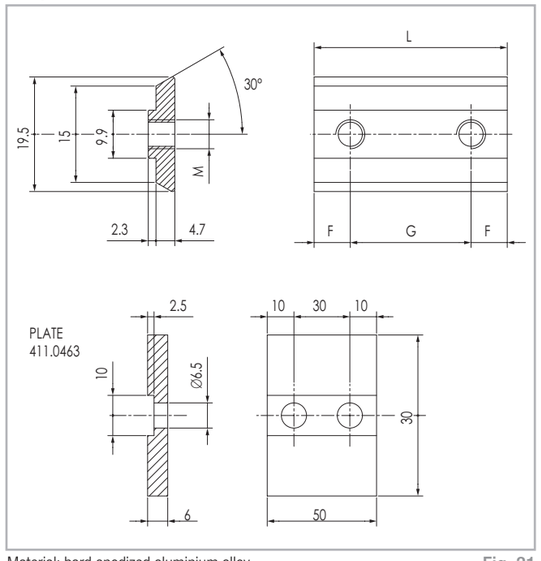

Material: hard anodized aluminium alloy

Fig. 31

Code N°	N° Holes	F	G	L	M	Material
411.1732	1	10	/	20	M4	Burnished steel
411.2732	1	10	/	20	M5	
411.2733	9	8	60	496	M5	
411.0732	1	10	/	20	M6	
411.0768	2	15	30	60	M6	
411.0754	3	10	30	80	M6	
411.0769	6	25	30	200	M6	
411.0771	2	25	100	150	M6	
411.0462	2	10	30	50	M6	
411.3532	1	10	/	20	M8	

Tab. 4

Fishplate for end to end joining

411.0772

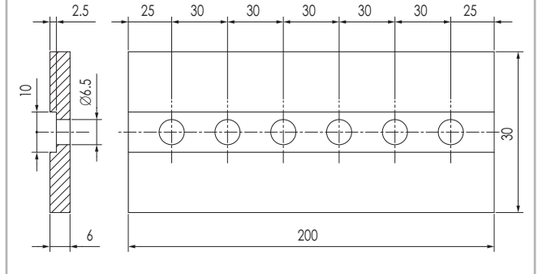

Material: hard anodized aluminium alloy

Fig. 32

Fishplate for side-arm attachment

411.0770

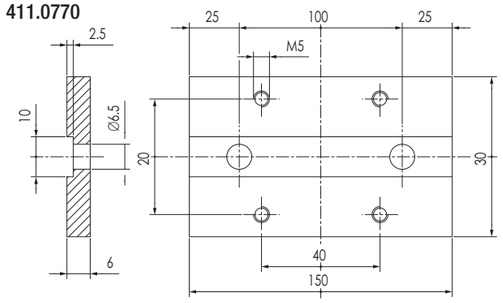

Material: hard anodized aluminium alloy

Fig. 33

Plate for m² rack mounting

411.1041

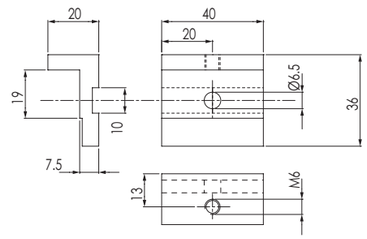

Fig. 34

Roller assembly and "V" rollers "Light"

Plastic compound eccentric roller

ROL-E032VC-B

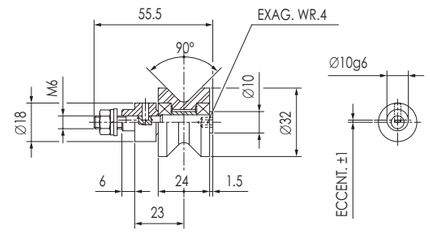

Max. load: radial 270 N axial 100 N

Fig. 35

Plastic compound concentric roller

ROL-C032VC-B

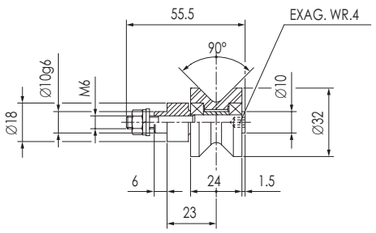

Max. load: radial 270 N axial 100 N

Fig. 36

FOR AXIALLY FREE ROLLER SEE PAGE SR-12 (55.1072 CONC. - 55.1073 ECC.)

Roller assembly with 3 rollers

55.0372

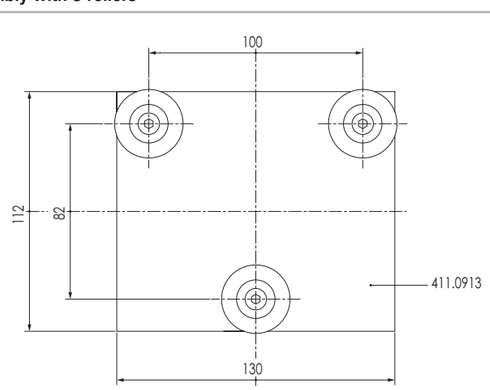

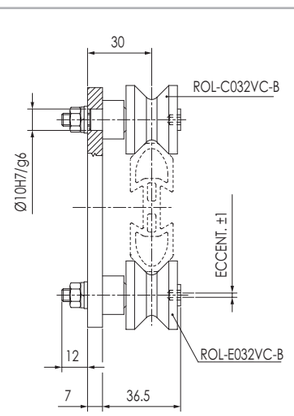

Fig. 37

Roller assembly with 4 rollers

55.0375

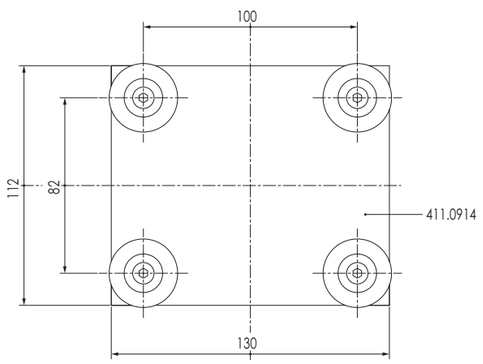

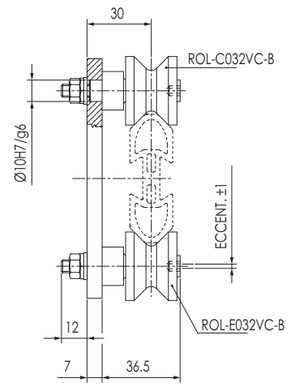

Fig. 38

Roller assemblies and "V" rollers

Plastic compound concentric roller

ROL-C050VC-B

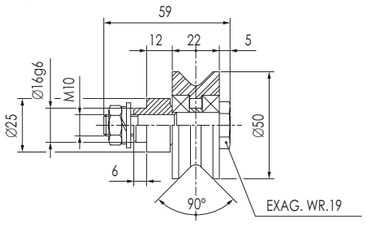

Max. load: radial 400 N axial 100 N

Fig. 39

Plastic compound eccentric roller

ROL-E050VC-B

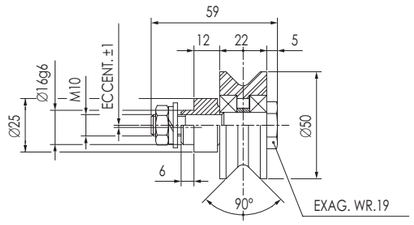

Max. load: radial 400 N axial 100 N

Fig. 40

Roller assembly with 3 rollers

55.0605

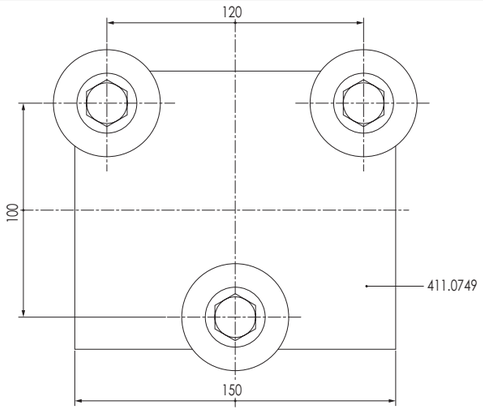

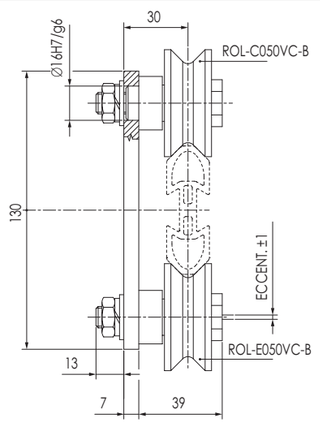

Fig. 41

Roller assembly with 4 rollers

55.0606

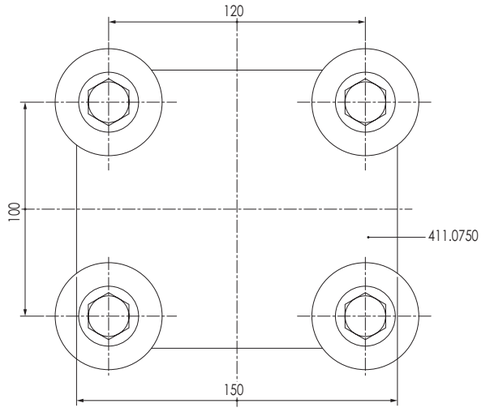

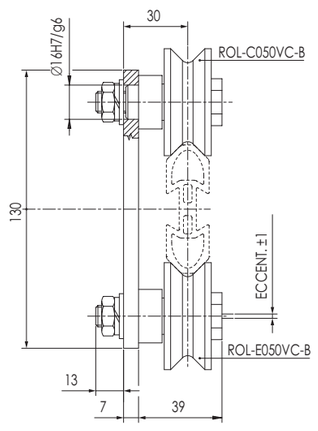

Fig. 42

Speedy Rail 90

"Middle Speedy Rail" guide and specifications

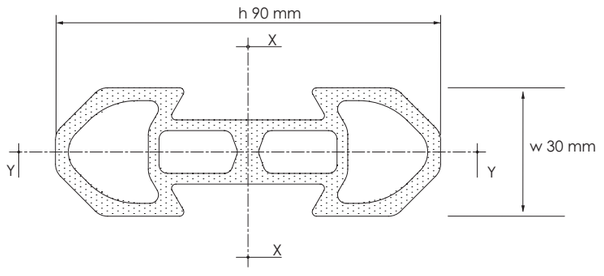

Fig. 43

Surface quadratic moments: X-X axis = 630.000 mm4 / Y-Y axis = 76.500 mm4.

Max. manufacturing tolerances = ±0.20 mm across opposite rolling surfaces.

Max. angular distorsion = ±20'/m.

Linear mass = 2.6 Kg/m.

Max. linear distorsion = ±0.4 mm/m.

Standard lengths: 1000-1500-2000-2500-3000-3500-4000-4500-5000-5500-6000-6500-7000-7500 mm.

External surface: deep hard anodizing

S
R

"Middle Speedy Rail" assemblies and components

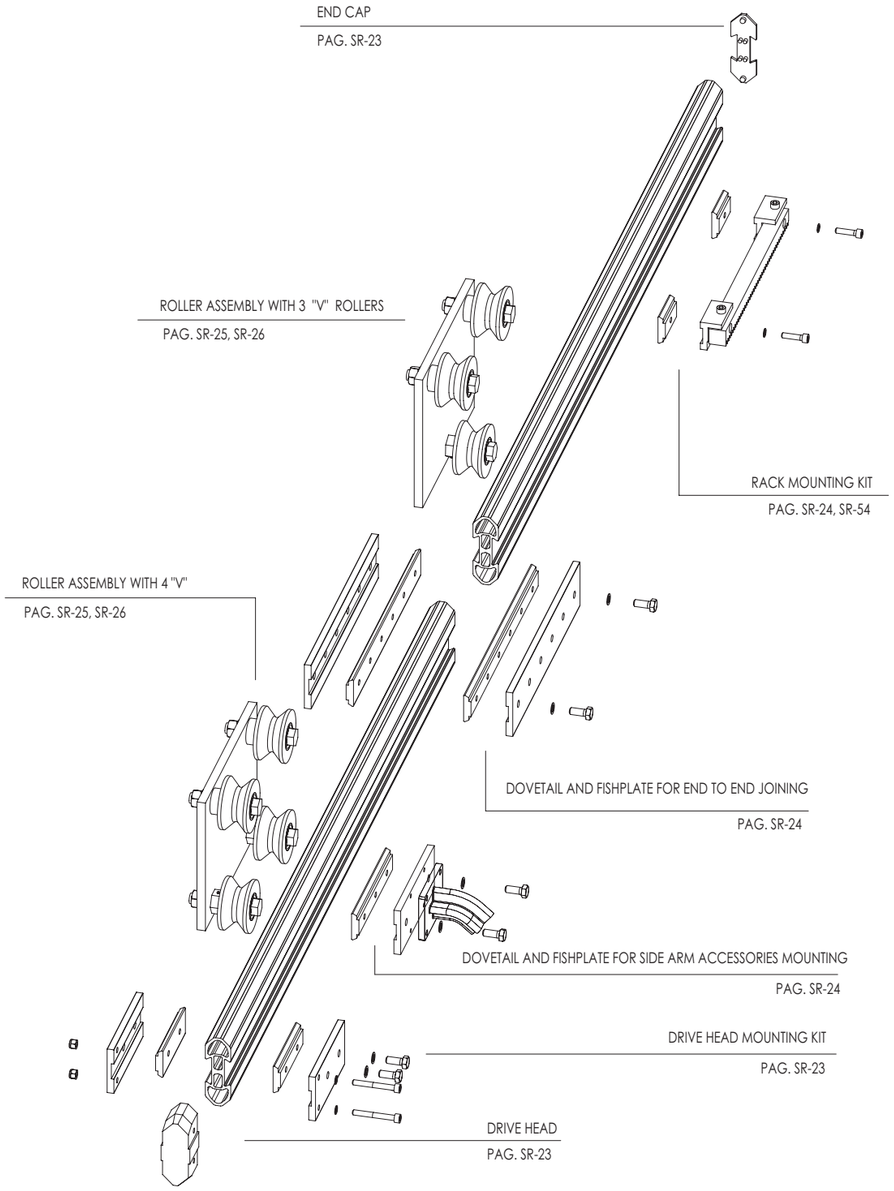

Fig. 44

"Middle Speedy Rail" guide and components

Middle Speedy Rail with plain ends - Order code 411.0964 / length in mm.

SR090 -T



Fig. 45

Middle Speedy Rail with drilled ends
Order code 411.0965 / length in mm.

SR090 - F

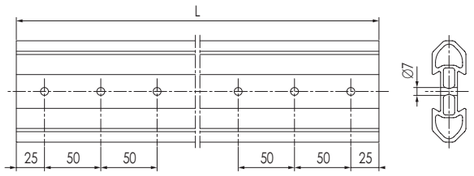

Fig. 46

Note: drillings on the guide end are required as a safety measure with end-to-end joining in moving rails.

See technical note on page SR-69

Fishplate for drive head

411.0866

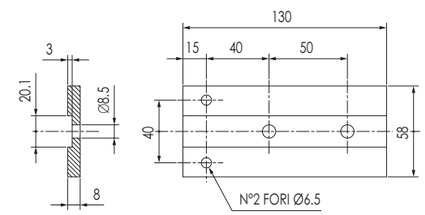

Fig. 47

Drive head

411.0856

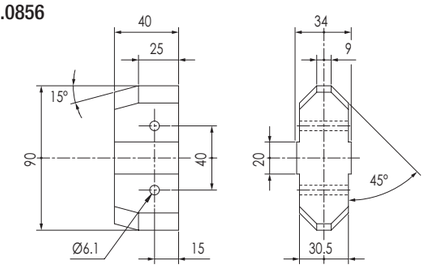

Fig. 48

End cap

411.0858

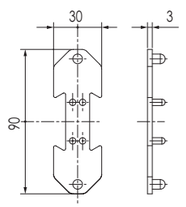

Fig. 49

Bolt for drive head mount

411.0610

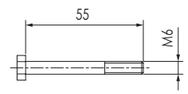

Fig. 50

Dovetail clamps and fishplates

Fishplate

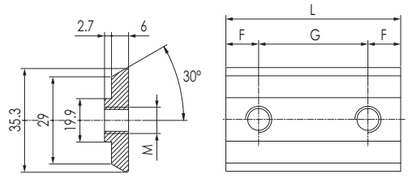

Fig. 51

Code N.	N° Holes	F	G	L	M	Material
411.1025	1	25	/	50	M4	Burnished steel
411.1047	1	25	/	50	M6	
411.1045	1	25	/	50	M8	
411.1069	2	25	50	100	M8	
411.1088	3	25	50	150	M8	
411.1072	4	25	50	200	M8	
411.1070	6	25	50	300	M8	

Tab. 5

Dovetail-execution without step

411.1046

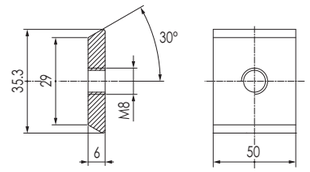

Fig. 52

Dovetail-quick front insertion version

411.0855

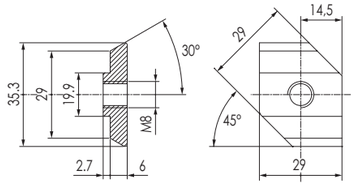

Fig. 53

Fishplate for end to end joining

411.0872

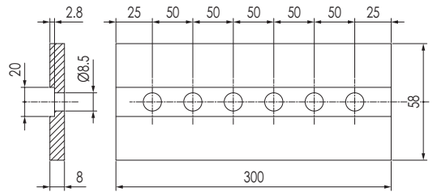

Material: hard anodized aluminium alloy

Fig. 54

Fishplate for side-arm attachment

411.1124

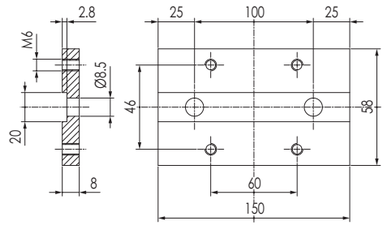

Material: hard anodized aluminium alloy

Fig. 55

Steel plate for m² rack mounting

411.1226

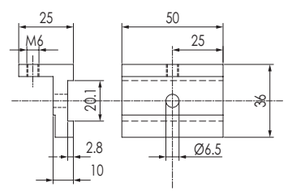

Fig. 56

Plastic compound shell "V" rollers

Concentric roller

ROL-C062VC-B

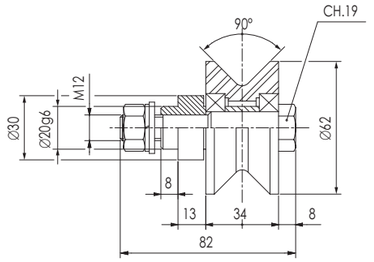

Max. load: radial 450 N/axial 150 N

Fig. 57

Ecccentric roller

ROL-E062VC-B

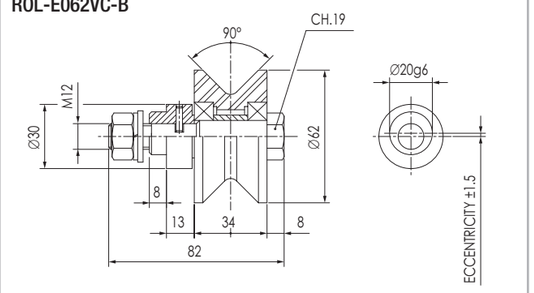

Max. load: radial 450 N/axial 150 N

Fig. 58

Concentric roller heavy duty

ROL-C062VC-BH

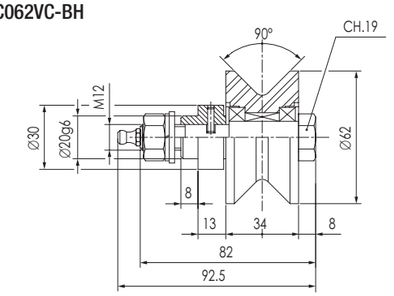

Max. Load: radial 700 N/axial 280 N - Optional lifetime lubrication

Fig. 59

Ecccentric roller heavy duty

ROL-E062VC-BR

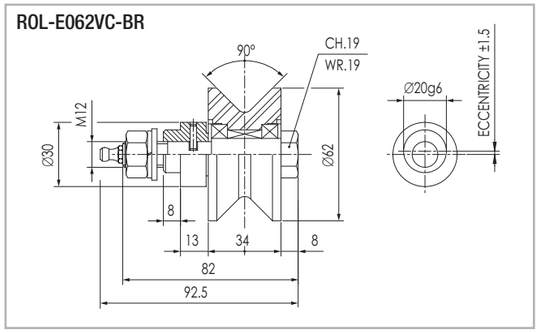

Max. Load: radial 700 N/axial 280 N - Optional lifetime lubrication

Fig. 60

Concentric roller axially free ±1.75 mm

ROL-C062VC-BA

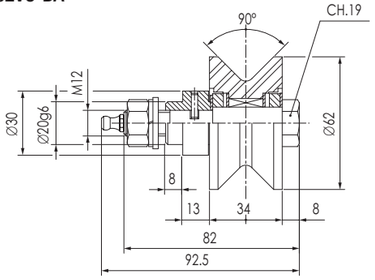

Max. radial load: 700 N - Optional lifetime lubrication

Fig. 61

Eccentric roller axially free ±1.75 mm

ROL-E062VC-BA

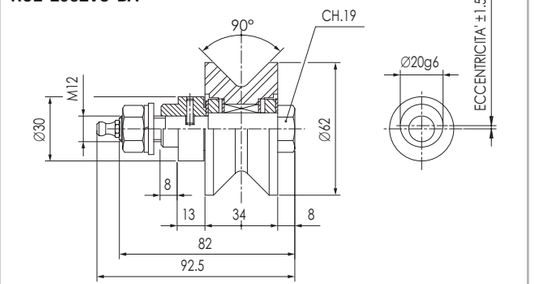

Max. radial load: 700 N - Optional lifetime lubrication

Fig. 62

Roller assembly with "V" shaped rollers

Roller assembly with 4 rollers

55.0666

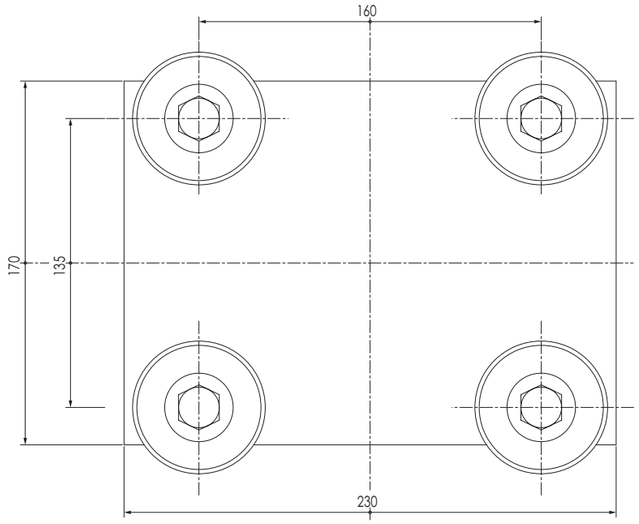

Fig. 63

Roller assembly with 3 rollers

55.0665

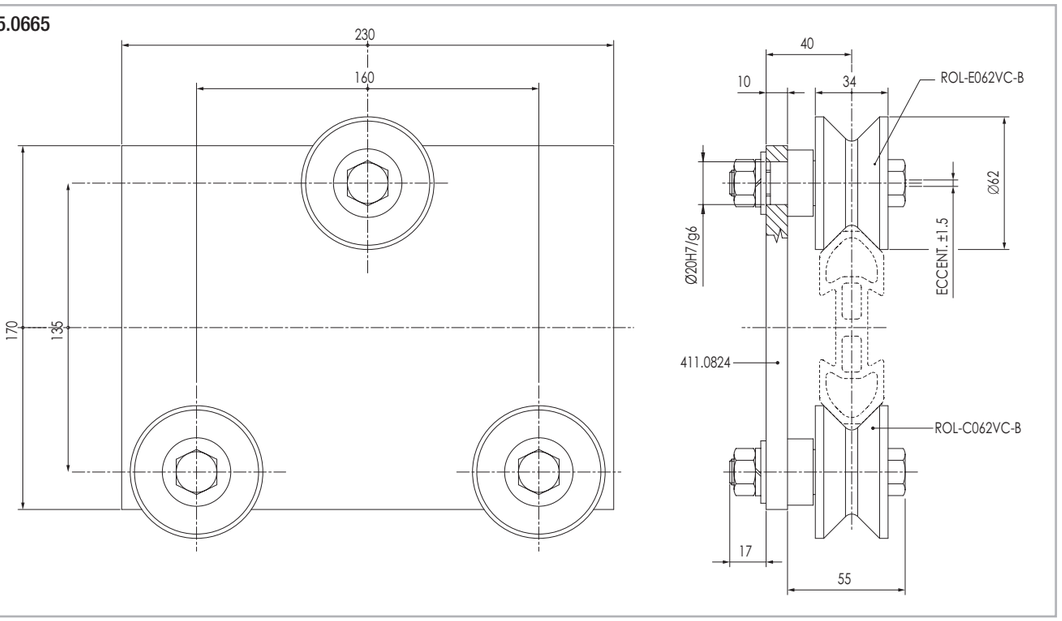

Fig. 64

The plates - cod. 411.0825 and 411.0824 - are made in aluminium alloy with hard anodization. The rollers -cod. 55.0387, 55.0388, 55.0130 55.0131- and/or different combinations from the ones shown on this page can be mounted on the above plates. Please call our technical dept. Prior any configuration changes.

Speedy Rail 120

"Standard Speedy Rail" guide and specifications

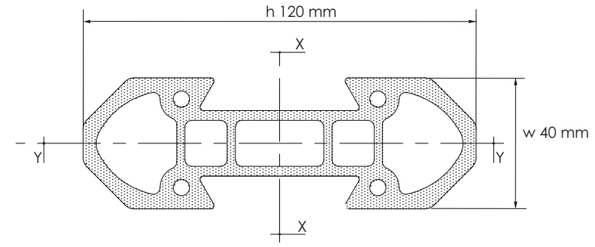

Fig. 65

Surface quadratic moments: X-X axis = 2.138.988 mm4 / Y-Y axis = 259.785 mm4.

Max. manufacturing tolerances = ±0.20 mm across opposite rolling surfaces.

Max. angular distorsion = ±20'/m.

Linear mass = 4.4 Kg/m.

Max. linear distorsion = ±0.5 mm/m.

Standard lengths: 1000-1500-2000-2500-3000-3500-4000-4500-5000-5500-6000-6500-7000-7500 mm.

External surface: deep hard anodizing

"Standard Speedy Rail" assemblies and components

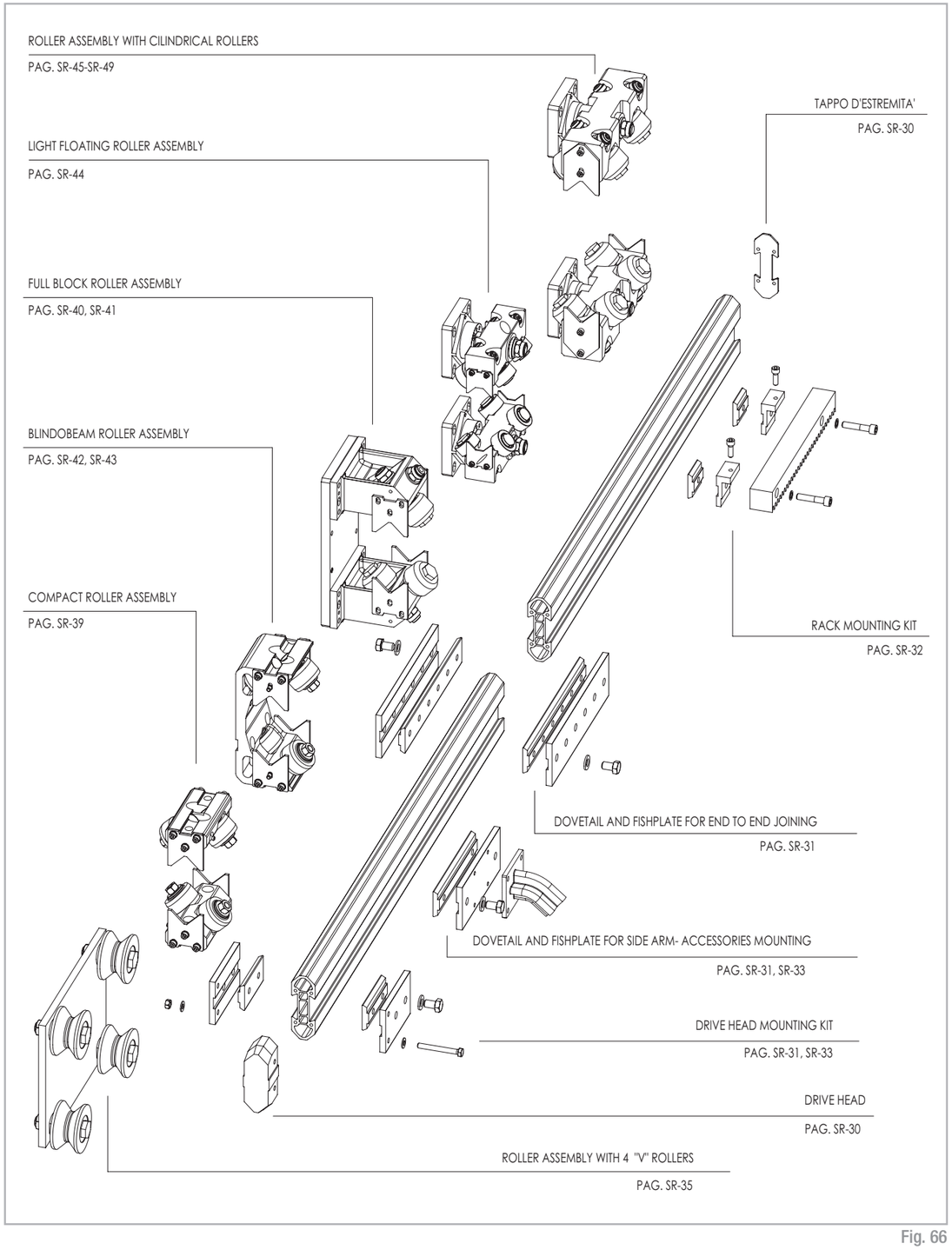

Fig. 66

"Standard Speedy Rail" guide and specifications

Standard speedy rail with plain ends - Order code 411.2464 / length in mm.

SR120 -T

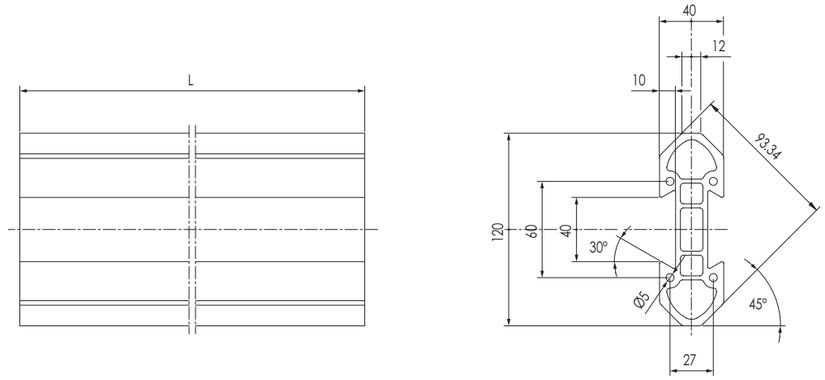

Fig. 67

Standard speedy rail with drilled ends - Order code 411.2465 / length in mm.

SR120 - F

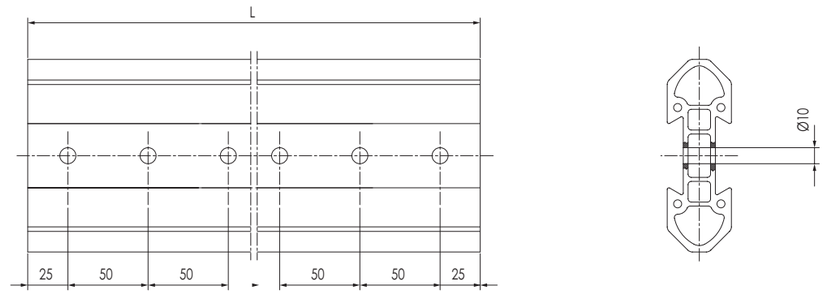

Fig. 68

Note: drillings on guide end are required as a safety measure with end-to-end joining in moving rails.

S
R

Components for speedy rail SR120 guide

Drive head

411.0476

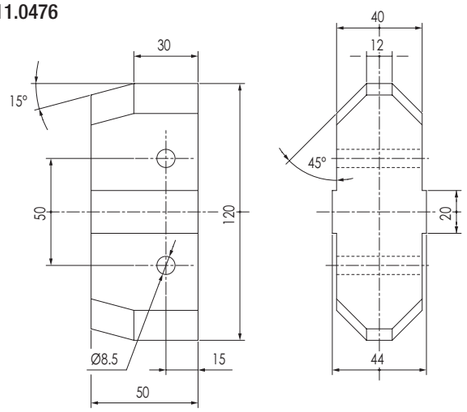

Fig. 69

Bolt for drive head

411.0617

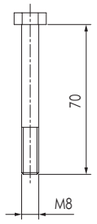

Fig. 70

Alluminium alloy end cap

411.1740

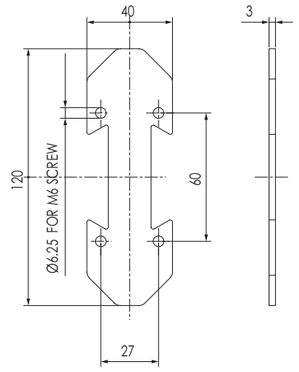

Fig. 71

Plastic end cap

411.0740

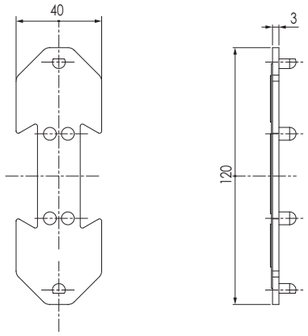

Fig. 72

Standard dovetail clamps

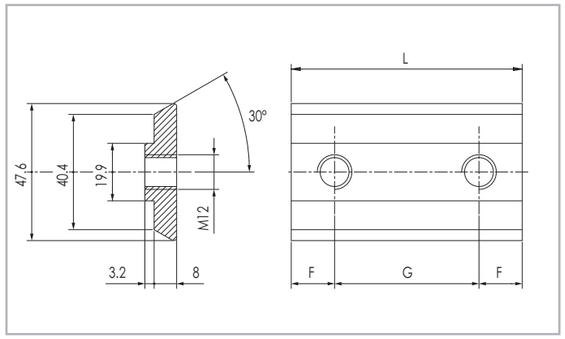

Fig. 73

Code N.	N° Holes	F	G	L	Material
411.0845	1	25	/	50	Burnished steel
411.0745	1	25	/	50	
411.0503	2	15	40	70	
411.0469	2	25	50	100	
411.0588	3	25	50	150	
411.0472	2	25	150	200	
411.0470	6	25	50	300	

Tab. 6

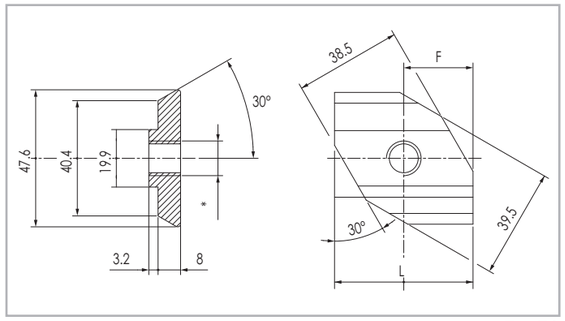

Fig. 74

411.1178
* M10 dovetail-quick front-insertion version

411.0845
* M12 dovetail-quick front-insertion version

Dovetail clamps with M8 threaded holes

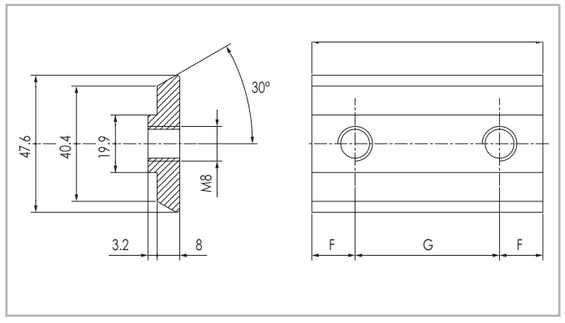

Fig. 75

Code N.	N° Holes	F	G	L	Material
411.0675	2	15	20	50	Burnished steel
411.1111	1	25	/	50	
411.1112	2	25	50	100	
411.1113	3	25	50	150	
411.0970	6	25	50	300	

Tab. 7

Dovetail clamps with M10 threaded holes

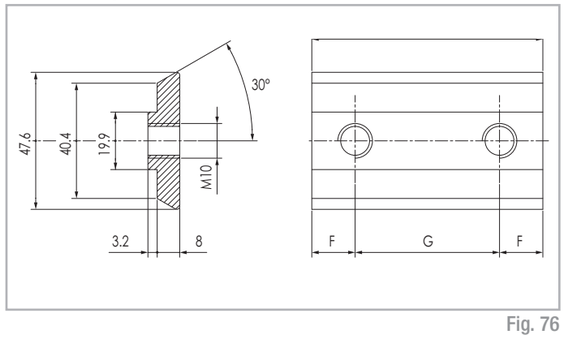

Fig. 76

Code N.	N° Holes	F	G	L	Material
411.1117	1	25	/	50	Burnished steel
411.1119	2	25	50	100	
411.1120	3	25	50	150	

Tab. 8

Dovetail clamps *quick front insert

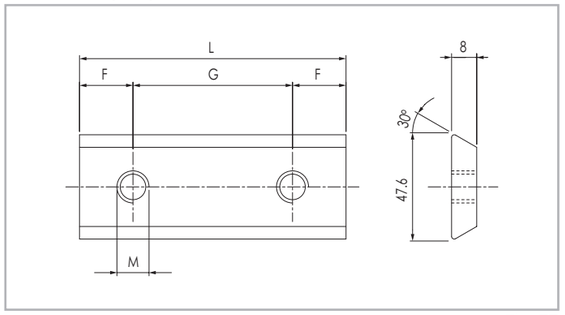

Fig. 77

Code N.	N° Holes	F	G	L	M	Material
411.1174*	1	25	/	50	M8	Burnished steel
411.1675	2	15	20	50	M8	
411.1186	1	25	/	50	M10	
411.1185	1	25	/	50	M12	
411.0888	3	25	50	150	M12	

Tab. 9

Racks components for rigid mounting

Fishplate for mod.3-4 rack mounting on dovetail grooves

411.1155

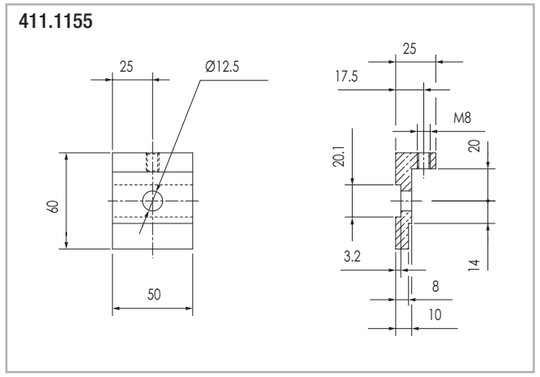

Fig. 78

For rack mounting plate mod.3 Use dovetaile 411.1111

For rack mounting plate mod.4 Use dovetail 411.1117

For standard racks see page SR-52; For dovetail see page SR-31, SR-32; For insert see page SR-56

Standard fixing fishplates

Side attachment fishplate suitable for: speedy rail standard, wide body, super wide body

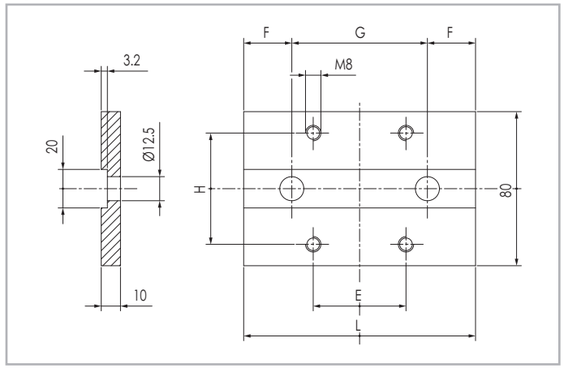

Fig. 79

Code N.	E	F	G	H	L	Material
411.0570	70	25	150	60	220	Hard anodized aluminium alloy

Tab. 10

Fishplates for end to end joining suitable for speedy rail standard, wide body, super wide body

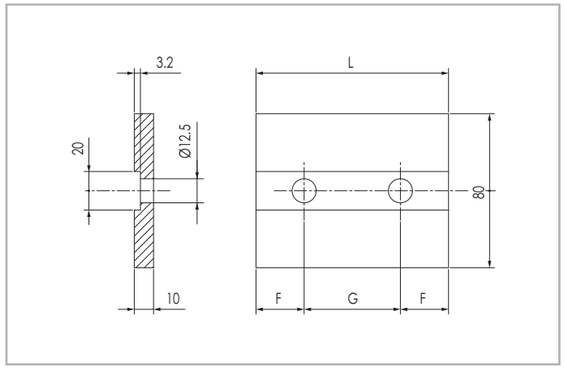

Fig. 80

Code N.	N° Fori	L	F	G	Material
411.0572	6	300	25	50	Hard anodized aluminium alloy
411.0690	6	300	25	50	Burnished steel
411.0573	6	300	25	50	Steel/countersuk holes

Tab. 11

Fishplate for drive head

411.0567

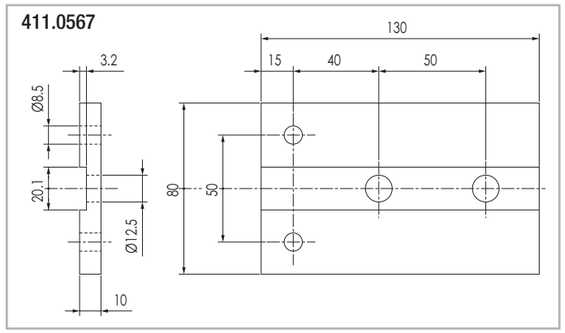

Fig. 81

M12 exag. head screw

411.0475

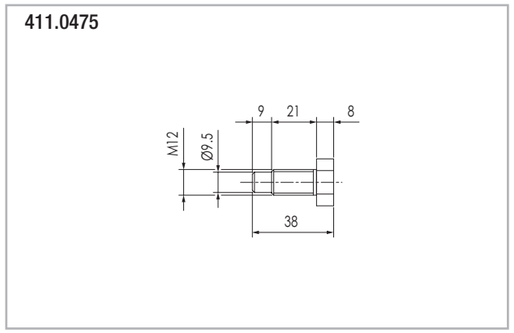

Fig. 82

Plastic compound shell "V" rollers

Concentric roller

ROL-C080VC-B

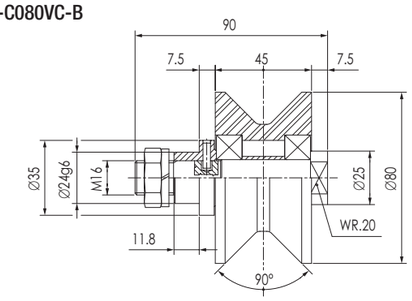

Radial load 700 N max. axial load 200 N max. - lifetime lubrication Fig. 83

Eccentric roller

ROL-E080VC-B

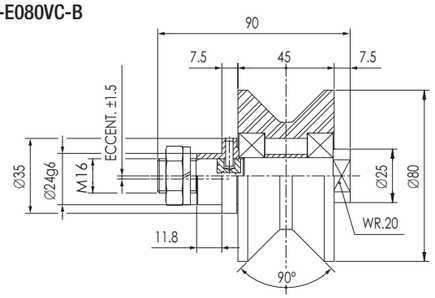

Radial load 700 N max. axial load 200 N max. Fig. 84

High stiffness concentric roller

ROL-C080VC-BR

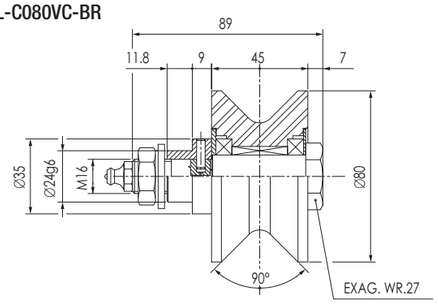

Radial load 1000 N max. axial load 400 N max. - Optional lifetime lubrication (end play 0.010/0.030 mm) Fig. 85

High stiffness eccentric roller

ROL-E080VC-BR

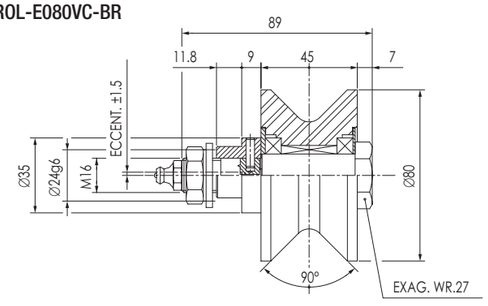

Radial load 1000 N max. axial load 400 N max. - Optional lifetime lubrication (end play 0.010/0.030 mm) Fig. 86

Concentric roller - axially free: ±1.9 mm

ROL-C080VC-BVA

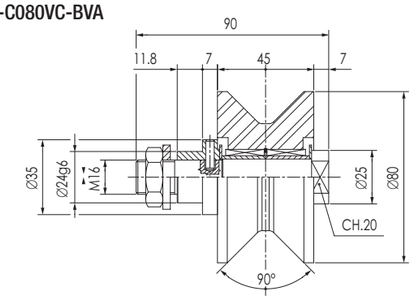

Radial load: 1000 N max. - lifetime lubrication Fig. 87

Eccentric roller - axially free: ±1.9 mm

ROL-E080VC-BVA

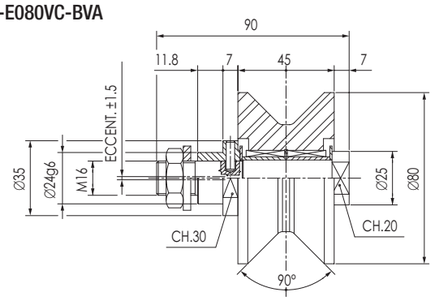

Radial load: 1000 N max. - lifetime lubrication Fig. 88

Roller assembly with "V" rollers

Light weight roller assembly with 4 rollers

55.0557

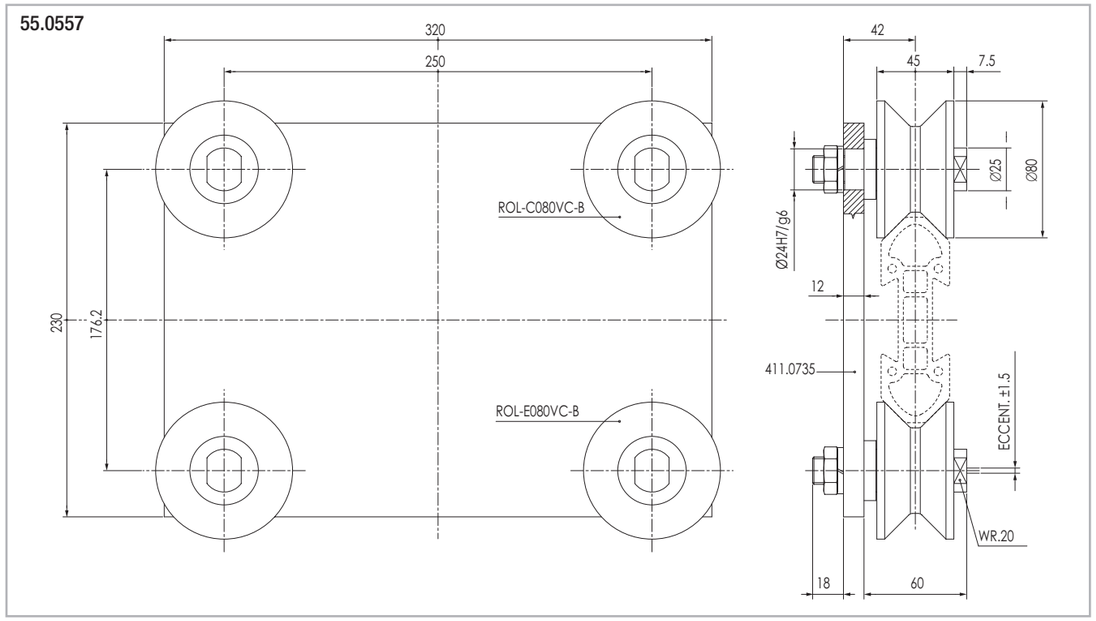

Fig. 89

Roller assembly with 4 high stiffness rollers

55.0558

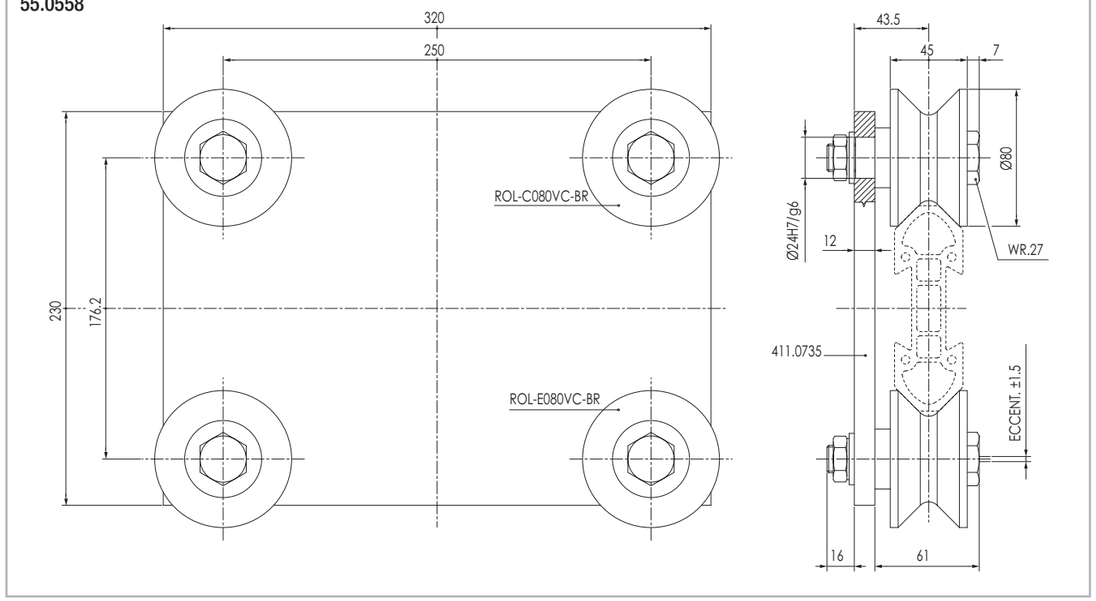

Fig. 90

The plate -cod. 411.0735 - is made in aluminium alloy with hard anodization. The rollers -cod. ROL-C080VC-BVA ROL-E080VC-BVA - and/or different combinations from the ones shown on this page can be mounted on the above plates after consulting our technical department.

Plastic compound shell rollers

Concentric roller radial load: 1280 N max.
Lifetime lubrication

ROL-C052CCL-BV

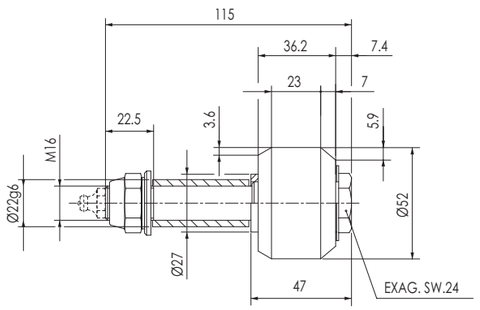

Fig. 91

ROL-C052CCL-BP
Concentric roller radial load: 1280 N max.
Periodical lubrication

Eccentric roller radial load: 1280 N max.
Lifetime lubrication

ROL-E052CCL-BV

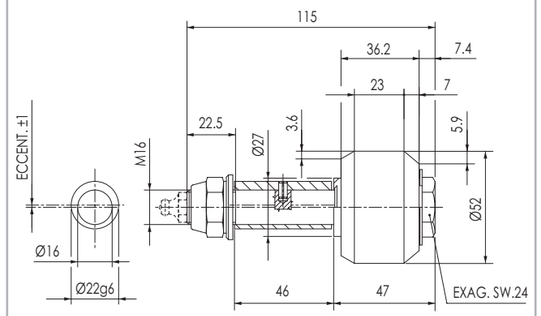

Fig. 92

ROL-E052CCL-BP
Eccentric roller radial load: 1280 N max.
Periodical lubrication

Concentric roller radial load: 880 N max.
Periodical lubrication

ROL-C040CC-BP

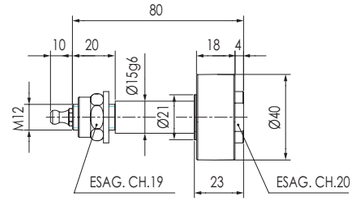

Fig. 93

Concentric roller radial load: 880 N max.
Lifetime lubrication

ROL-C040CC-BV

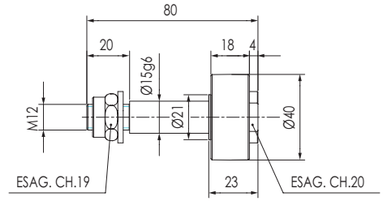

Fig. 94

Concentric roller

ROL-C052CCC-BP

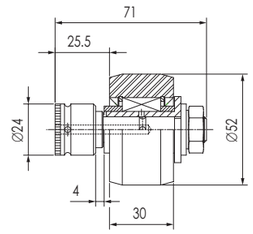

Radial load: 1280 N max. - periodical lubrication Fig. 95

ROL-C052CCC-BV
Concentric roller radial load: 1280 N max.
Lifetime lubrication

Eccentric roller

ROL-E052CCC-BP

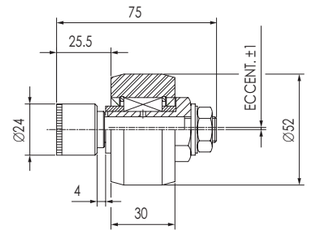

Radial load: 1280 N max. - periodical lubrication Fig. 96

ROL-E052CCC-BV
Concentric roller radial load: 1280 N max.
Lifetime lubrication

Heavy duty concentric 'V' roller

ROL-C090VC-BH

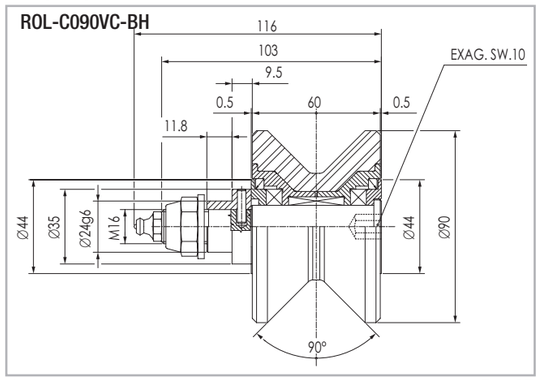

Max. load: radial 1150 N axial 650 N Fig. 97

Heavy duty eccentric 'V' roller

ROL-E090VC-BH

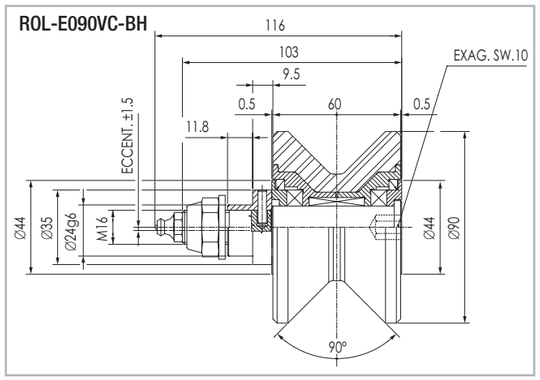

Max. load: radial 1150 N axial 650 N Fig. 98

Heavy duty concentric 'V' roller - axially free: ±1.5 mm

ROL-C090VC-BAH

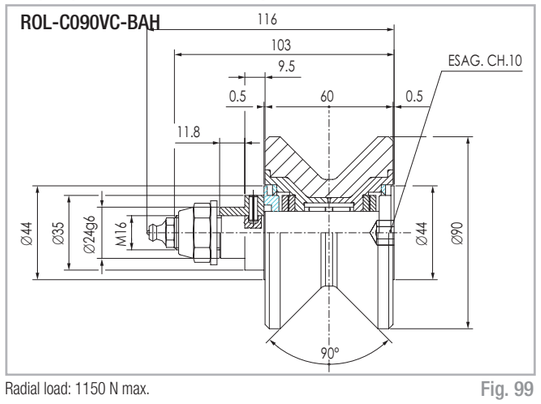

Radial load: 1150 N max. Fig. 99

Heavy duty eccentric 'V' roller - axially free: ±1.5 mm

ROL-E090VC-BAH

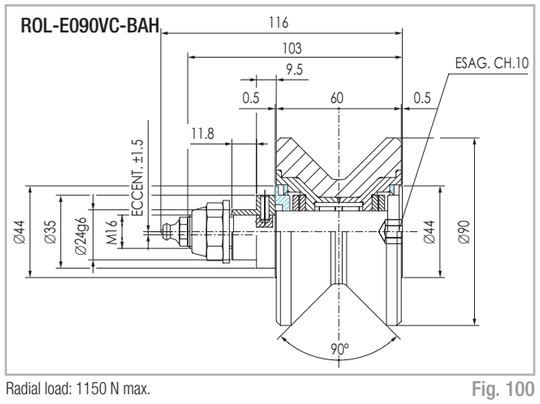

Radial load: 1150 N max. Fig. 100

2 Rollers light full-block assembly

Protected concentric 'V' roller for heavy duties

ROL-C090VC-BS

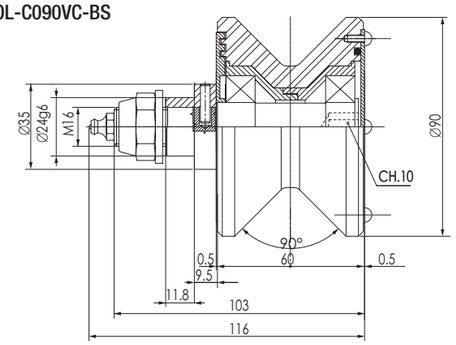

Max. load: radial 1150 N axial 650 N - Optional lifetime lubrication

Fig. 101

Protected eccentric 'V' roller for heavy duties

ROL-E090VC-BS

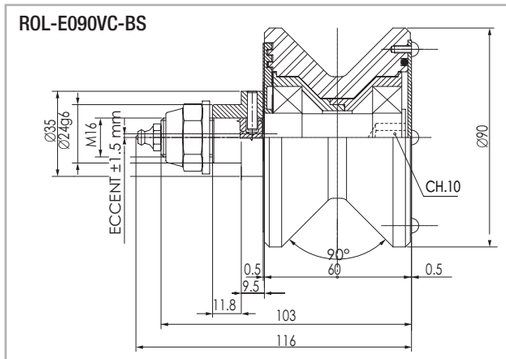

Max. load: radial 1150 N axial 650 N - Optional lifetime lubrication

Fig. 102

Wheelbase for all 'V' shaped rollers on Speedy Rail:
Wheelbase beetwen roller centers for SR250 = 302,2 mm
Wheelbase beetwen roller centers for SR180 = 232,2 mm
Wheelbase beetwen roller centers for SR120 = 176.2 mm

For SR250 use spacers code 411.0957, 411.0997 Pag. SR-67

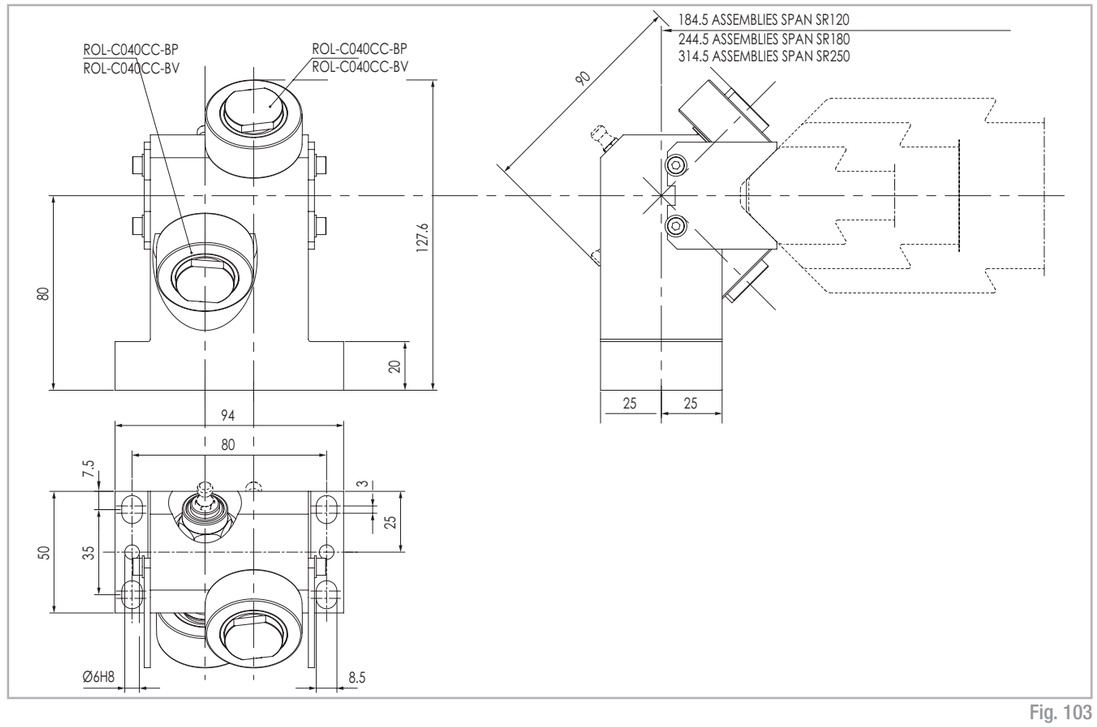

Fig. 103

55.1550
Light alloy rollers assembly with 2 Ø40 rollers. ROL-C040CC-BP
Periodical lubrication.

55.1570
Light alloy rollers assembly with 2 Ø40 rollers, ROL-C040CC-BV
Lifetime lubricated.

Compact roller assembly with plastic compound rollers

Light alloy compact roller assembly periodical lubrication version

55.0604

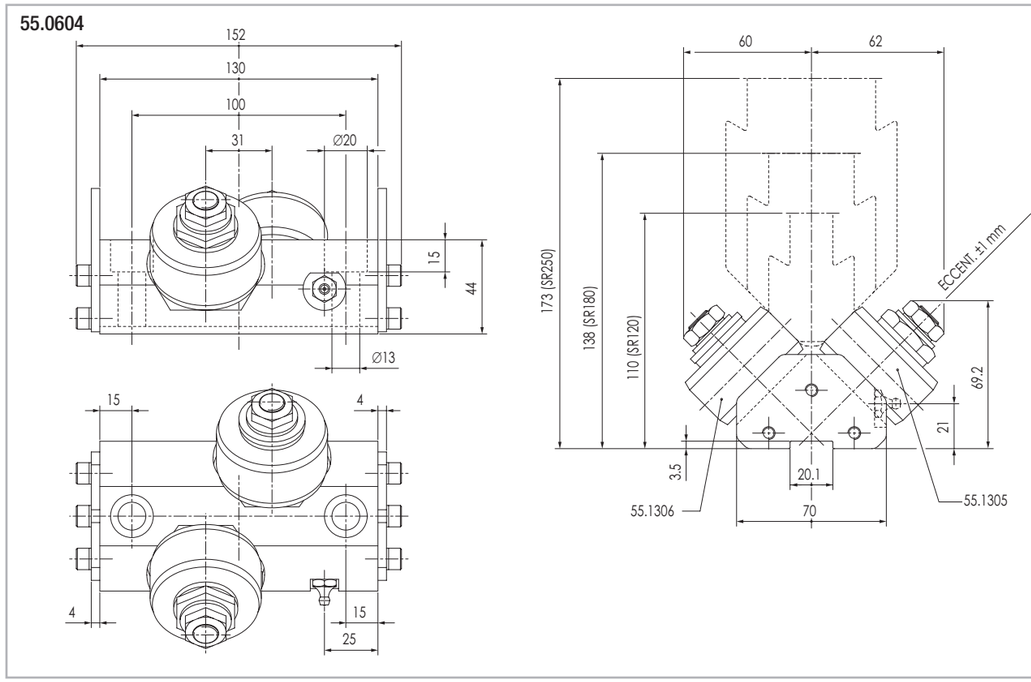

Fig. 104

Light alloy compact roller assembly lifetime lubrication version

55.0794

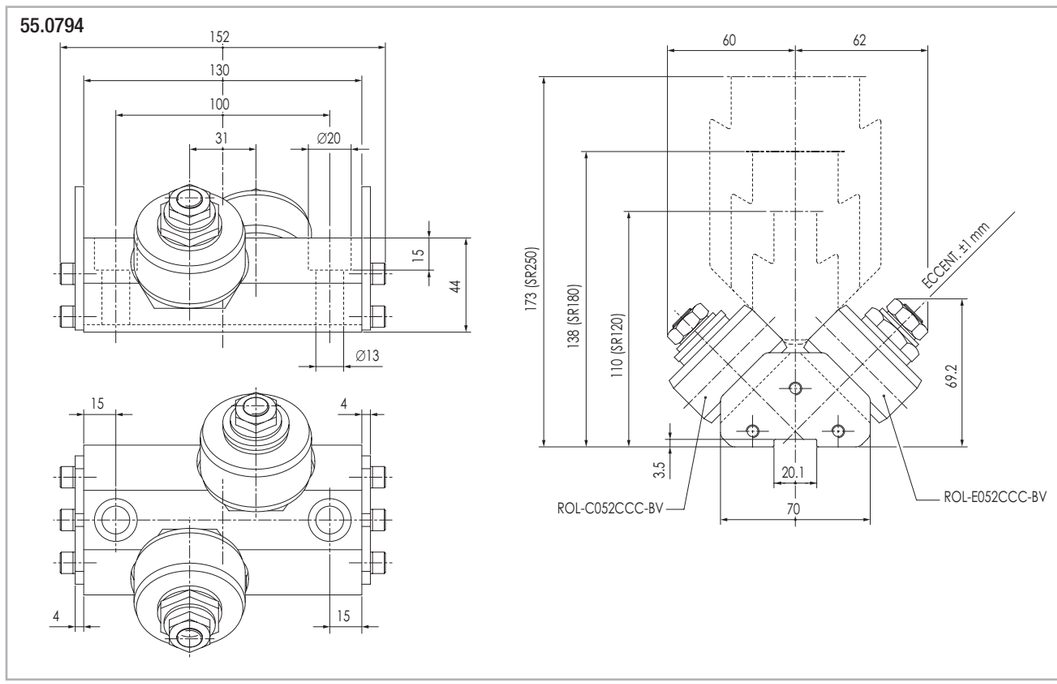

Fig. 105

Full-block roller assembly

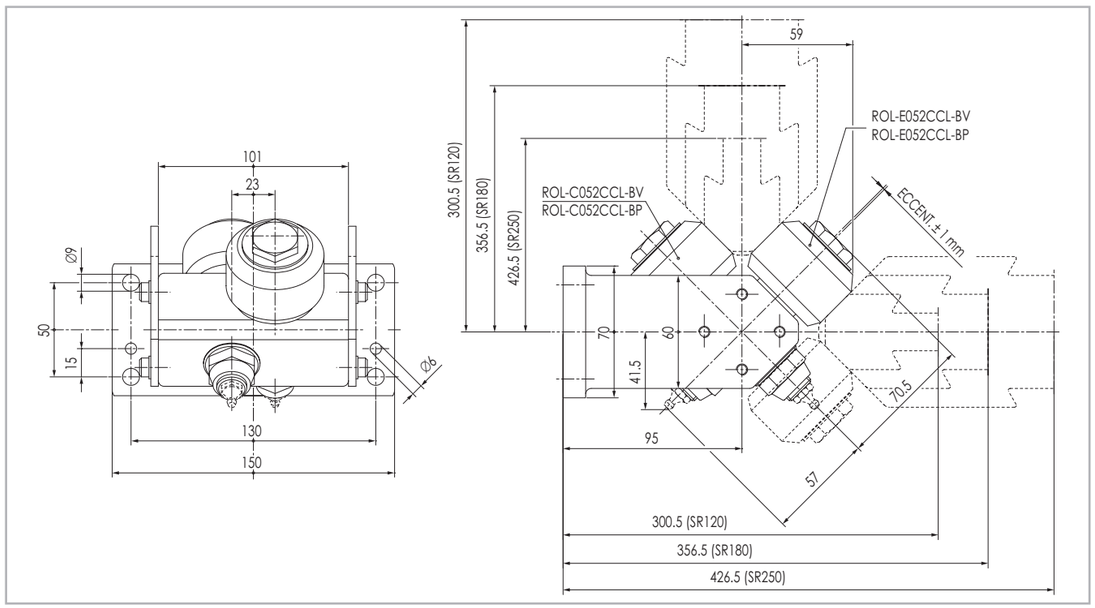

Fig. 106

55.0325

Light alloy body roller assembly with mounting holes on short sides and plastic compound rollers, periodical lubrication version, rollers ROL-C052CCL-BP, ROL-E052CCL-BP

55.0725

Lifetime lubrication version rollers ROL-C052CCL-BV, ROL-E052CCL-BV (55.0325)

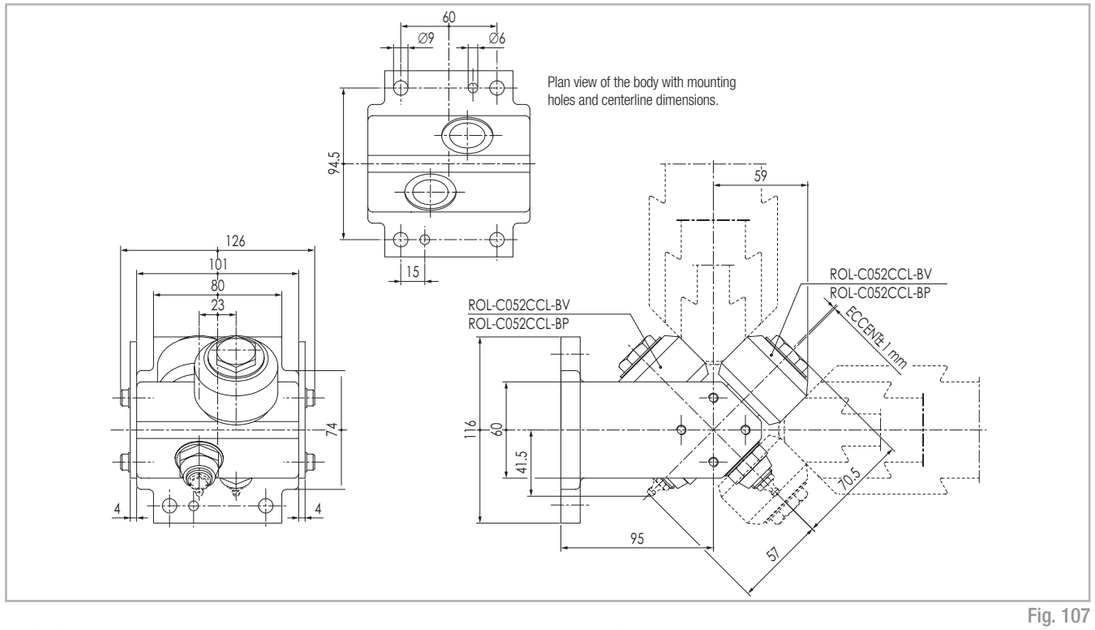

Fig. 107

55.0433

Light alloy body roller assembly with mounting holes on long sides and plastic compound rollers, periodical lubrication version, rollers ROL-C052CCL-BP, ROL-E052CCL-BP

55.0733

Lifetime lubrication version rollers ROL-C052CCL-BV, 55.1318

Roller assembly with 4 rollers

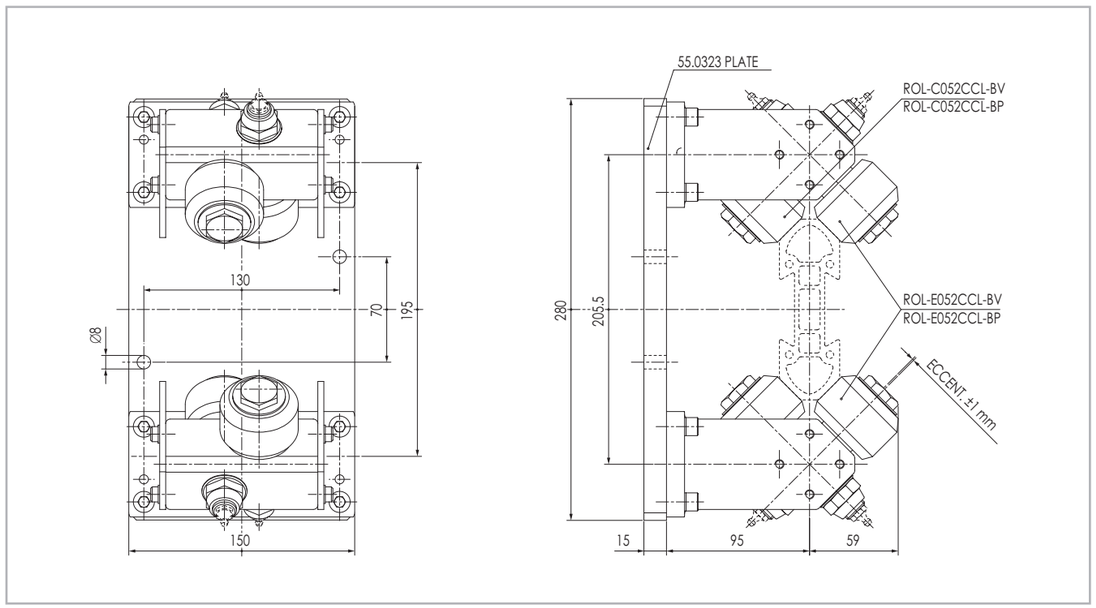

Fig. 108

55.0323

Roller assembly with backing plate 280x150x15. Rollers ROL-C052CCL-BP, ROL-E052CCL-BP with periodical lubrication

55.0723

Roller assembly with backing plate 280x150x15. Rollers ROL-C052CCL-BV, ROL-E052CCL-BV, lifetime lubricated

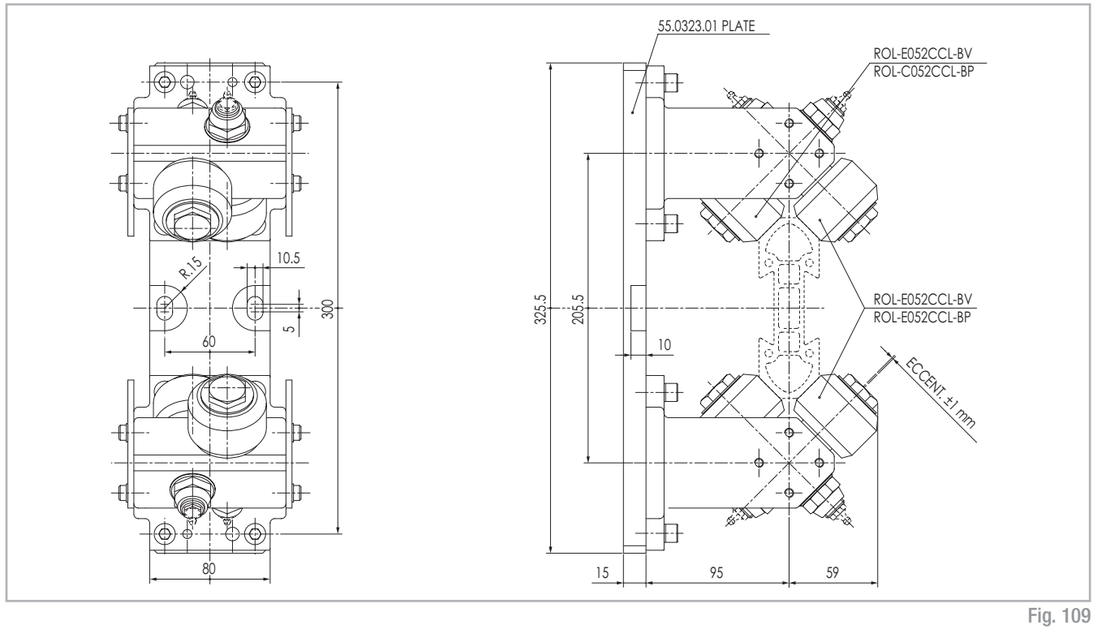

Fig. 109

55.0324

Roller assembly with backing plate 235.5X80x15. Rollers ROL-C052C-CL-BP, ROL-E052CCL-BP with periodical lubrication

55.0724

Roller assembly with backing plate 235.5X80x15. Rollers ROL-C052C-CL-BV, ROL-E052CCL-BV lifetime lubricated

Narrow/wide base blindo beam roller assembly

Narrow base roller assembly

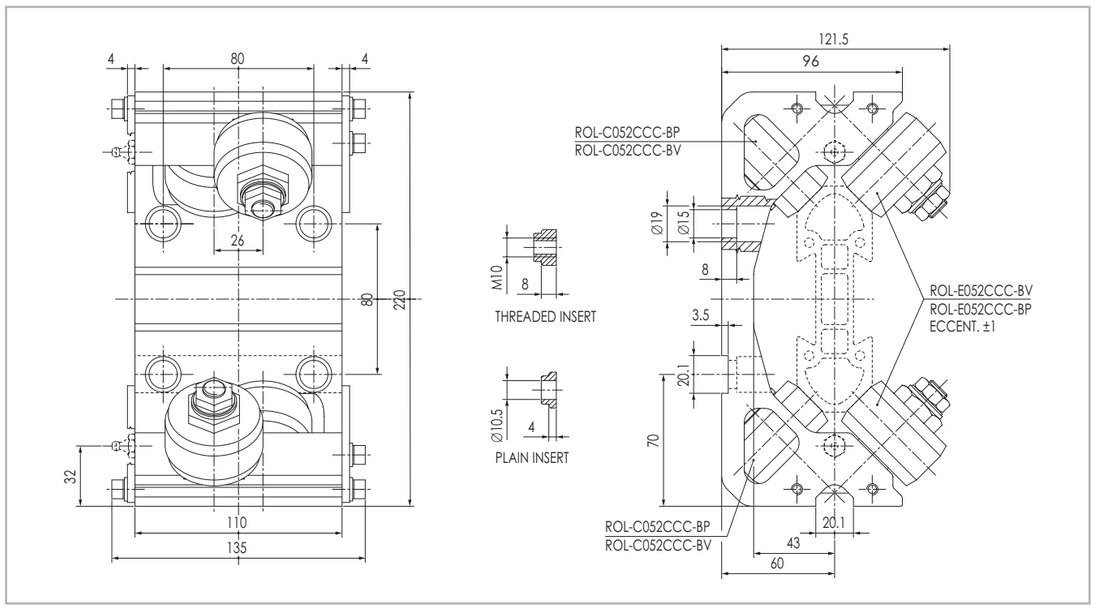

Fig. 110

55.0472-FIL
Equipped with 4 threaded fixing inserts
Periodical lubrication

55.0772-FIL
Equipped with 4 threaded fixing inserts
Lifetime lubrication

55.0472-PAS
Equipped with 4 through hole fixing inserts
Periodical lubrication

55.0772-PAS
Equipped with 4 through hole fixing inserts
Lifetime lubrication

Wide base roller assembly

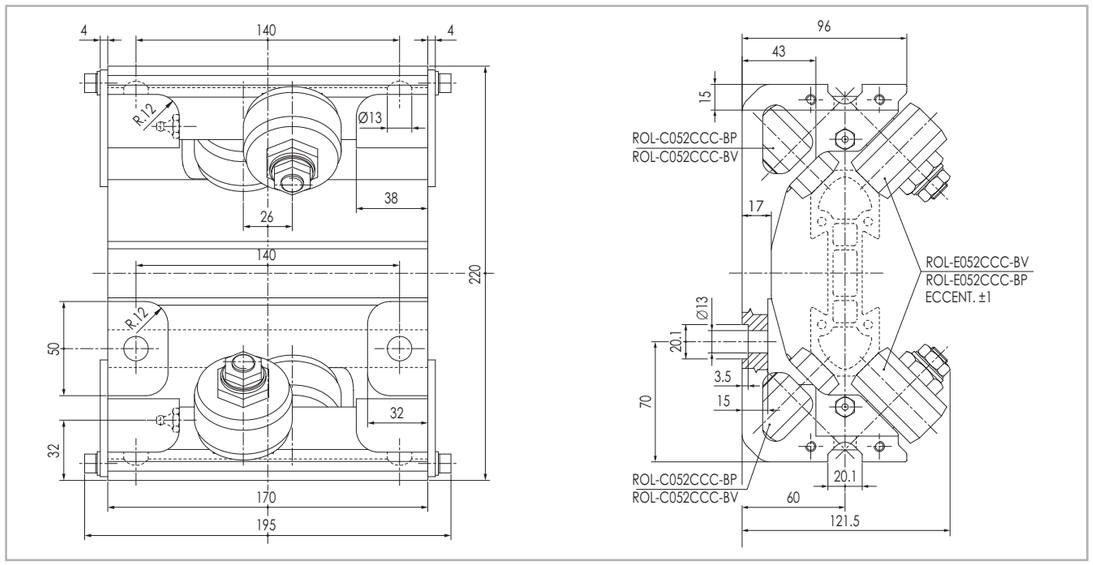

Fig. 111

55.0411
Periodical lubrication

55.0711
Lifetime lubrication

8 Rollers blindo beam roller assembly

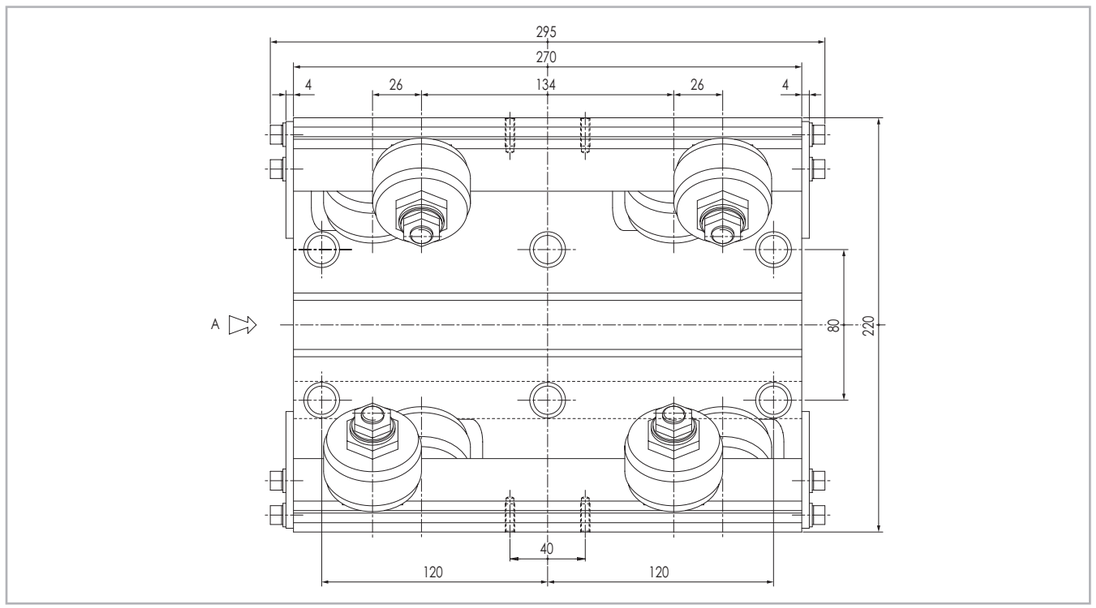

Fig. 112

55.0222-FIL
Equipped with 6 threaded fixing inserts
Lifetime lubrication

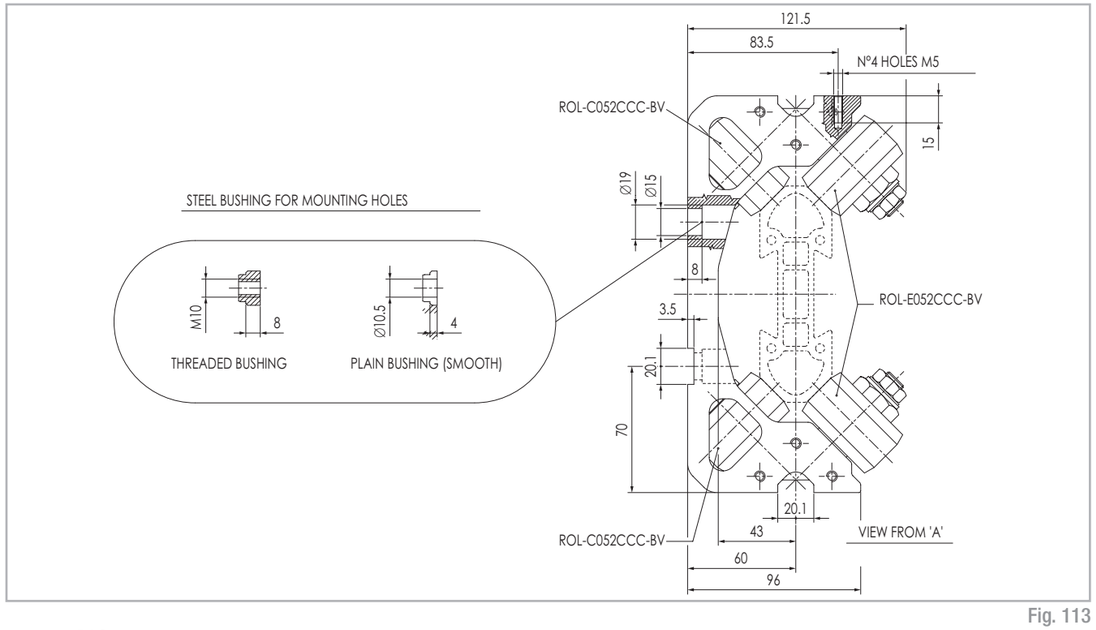

Fig. 113

55.0222-PAS
Equipped with 6 through hole fixing inserts
Lifetime lubrication

The roller box comes with N° 6 threaded bushing and N° 6 plain ones.
The customer will use the bushing more suitable for the application.

Light 4 rollers floating assembly for Speedy Rail guides

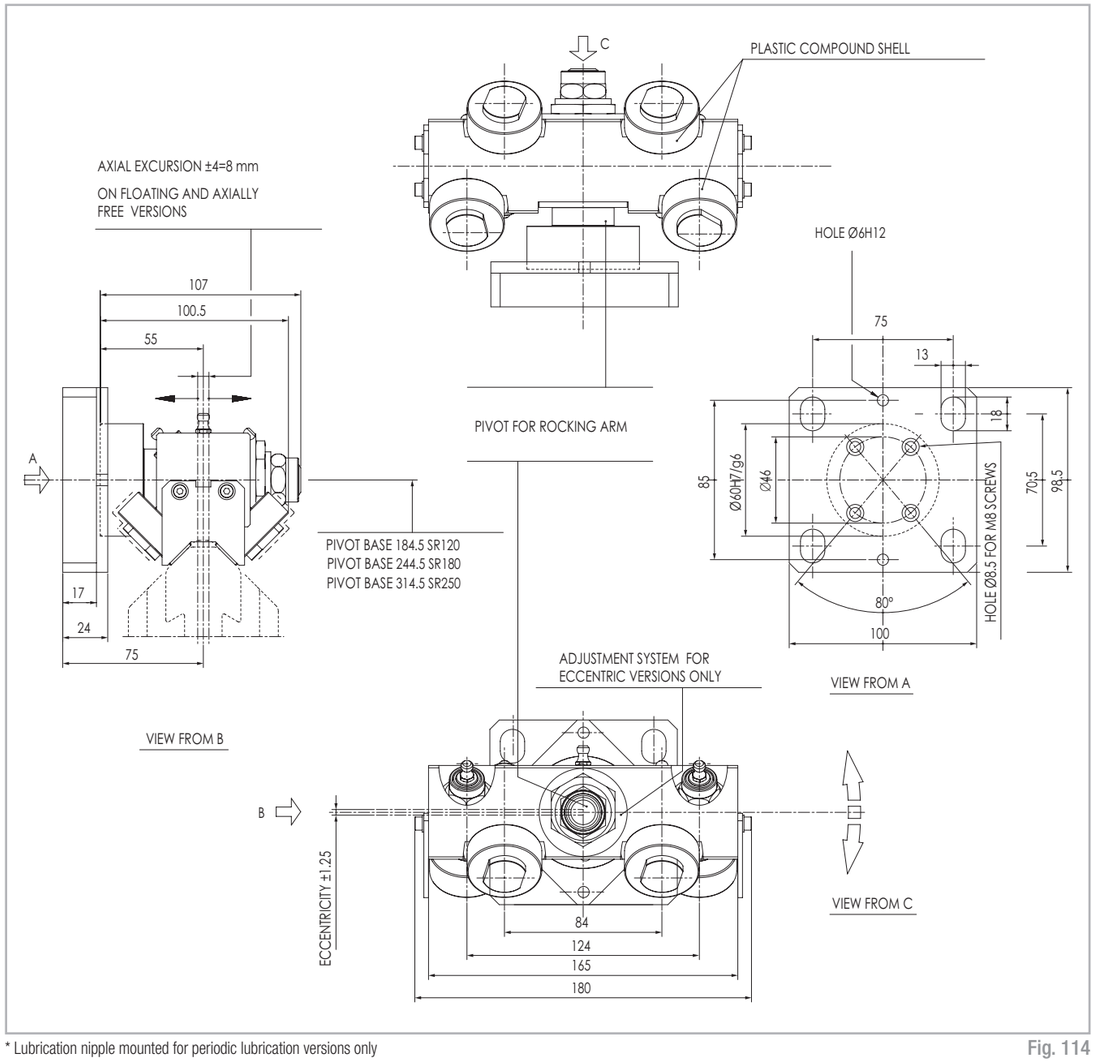

* Lubrication nipple mounted for periodic lubrication versions only

Fig. 114

Assemblies without baseplate have the same code followed by "SP"
(i.e. 55.1361/SP)

Roller assemblies reference		Axially constrained	Axially free	Rollers code
PERIODICAL LUBRICATION	ECC.	55.1565	55.3563	ROL-C040CC-BP
	CONC.	55.1566	55.3564	
LIFETIME LUBRICATION	ECC.	55.1555	55.3553	ROL-C040CC-BV
	CONC.	55.1556	55.3554	

Tab. 12

Floating roller assembly with 4 rollers - short/long pivot

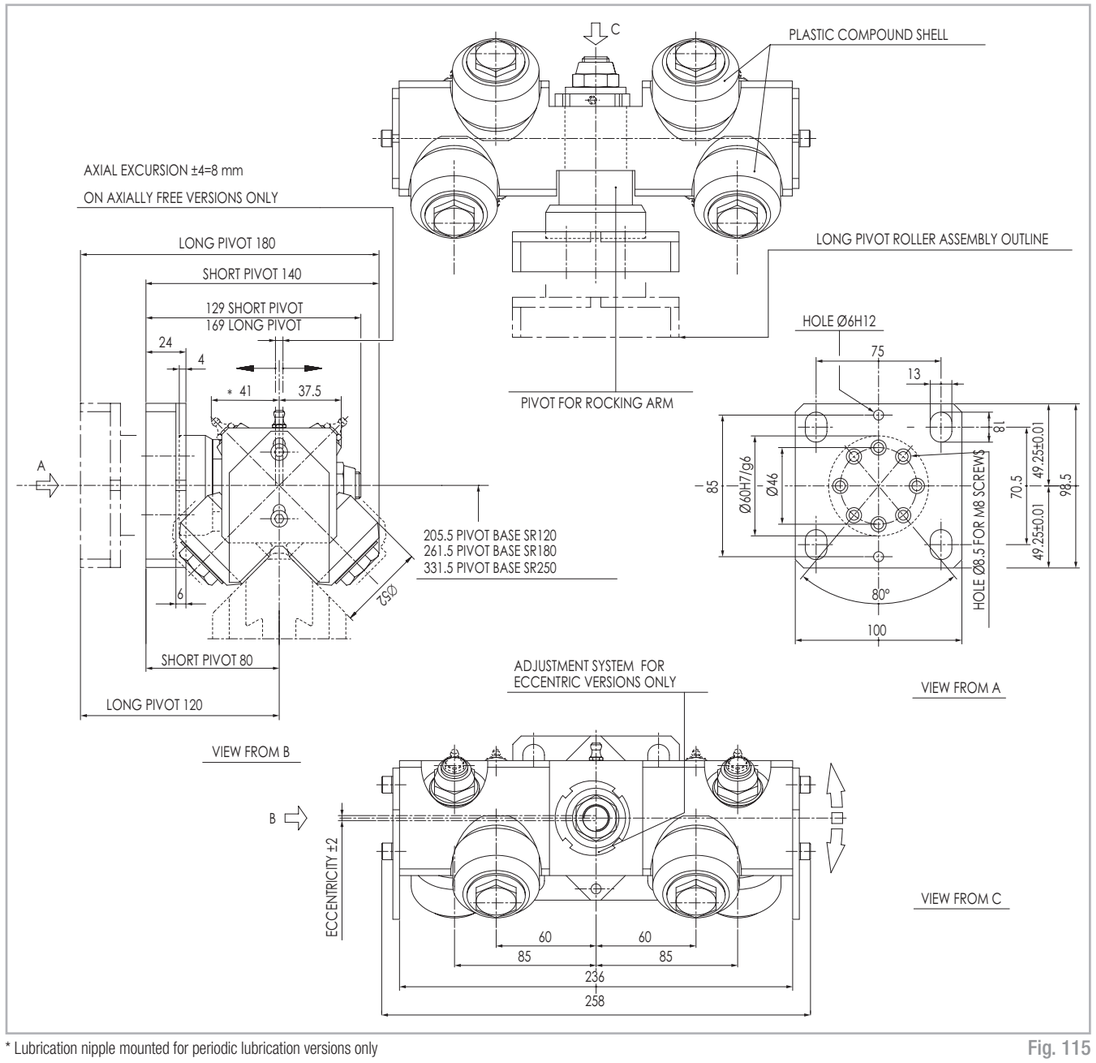

* Lubrication nipple mounted for periodic lubrication versions only

Fig. 115

Notes:

The axially free version of the assemblies are normally mounted on trolleys running on parallel rails. Coupled with axially constrained assemblies provide a flexible structure able to withstand minor misallignements between runways.

Assemblies without baseplate have the same code followed by "SP" (ad es. 55.1361/SP).

Roller assemblies reference			Axially constrained	Axially free	Rollers code
Short pivot	PERIODICAL LUBRICATION	ECC.	55.1361	55.3361	ROL-C052C-CL-BP
		CONC.	55.1364	55.3364	
	LIFETIME LUBRICATION	ECC.	55.1354	55.1358	ROL-C052C-CL-BV
		CONC.	55.1355	55.1359	
Long pivot	PERIODICAL LUBRICATION	ECC.	55.1363	55.3363	ROL-C052C-CL-BP
		CONC.	55.1365	55.3365	
	LIFETIME LUBRICATION	ECC.	55.1350	55.3350	ROL-C052C-CL-BV
		CONC.	55.1351	55.3351	

Tab. 13

5 Rollers assembly, one fixed, one self adjusting

Fixed 5 concentric rollers assembly

55.1315

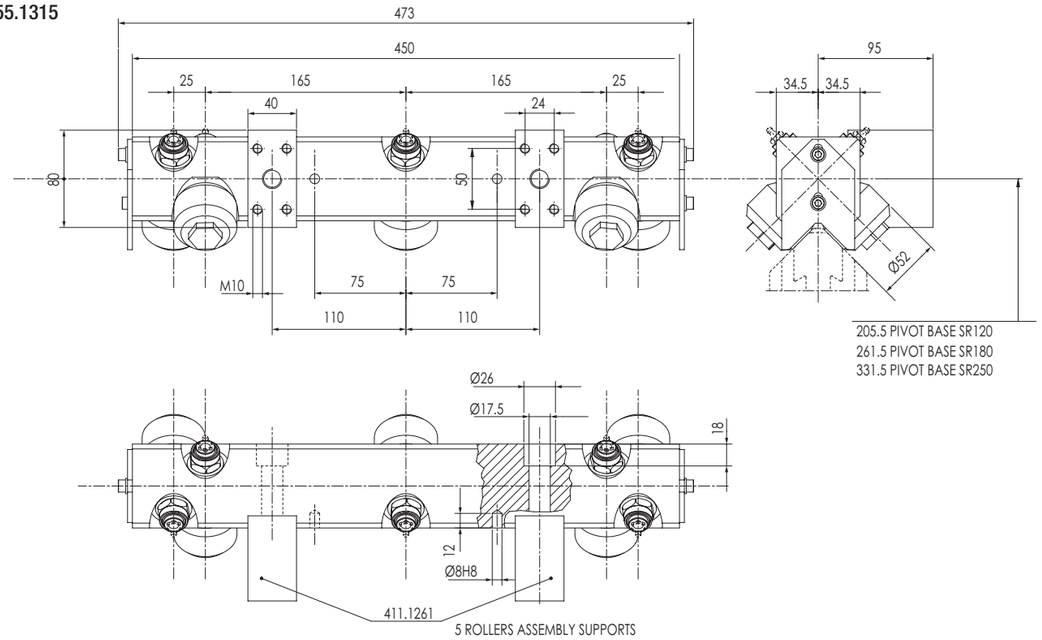

Fig. 116

Fixed 5 roller assembly, with 2 eccentric rollers for auto backlash retrival

55.1316

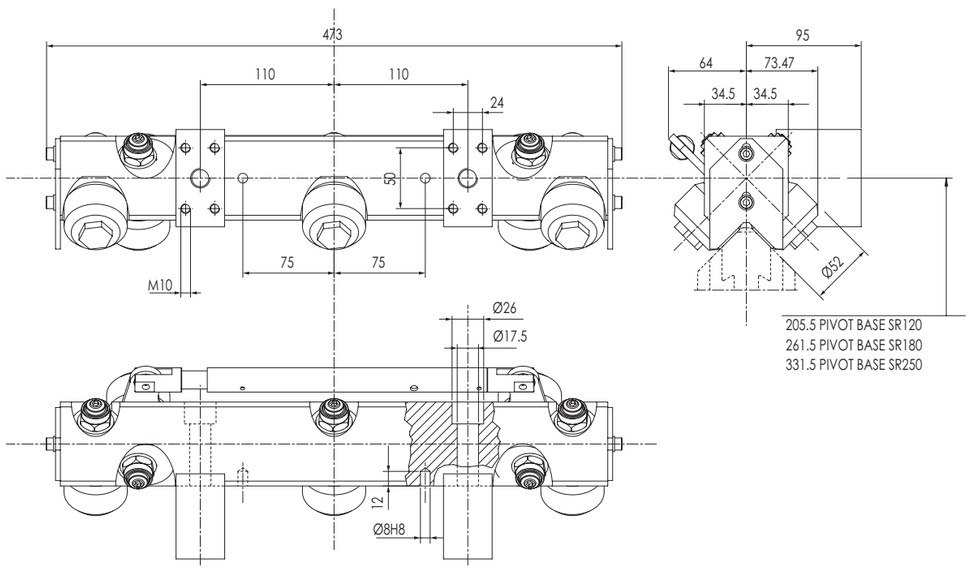

Fig. 117

Floating roller assembly with 6 rollers - short/long pivot

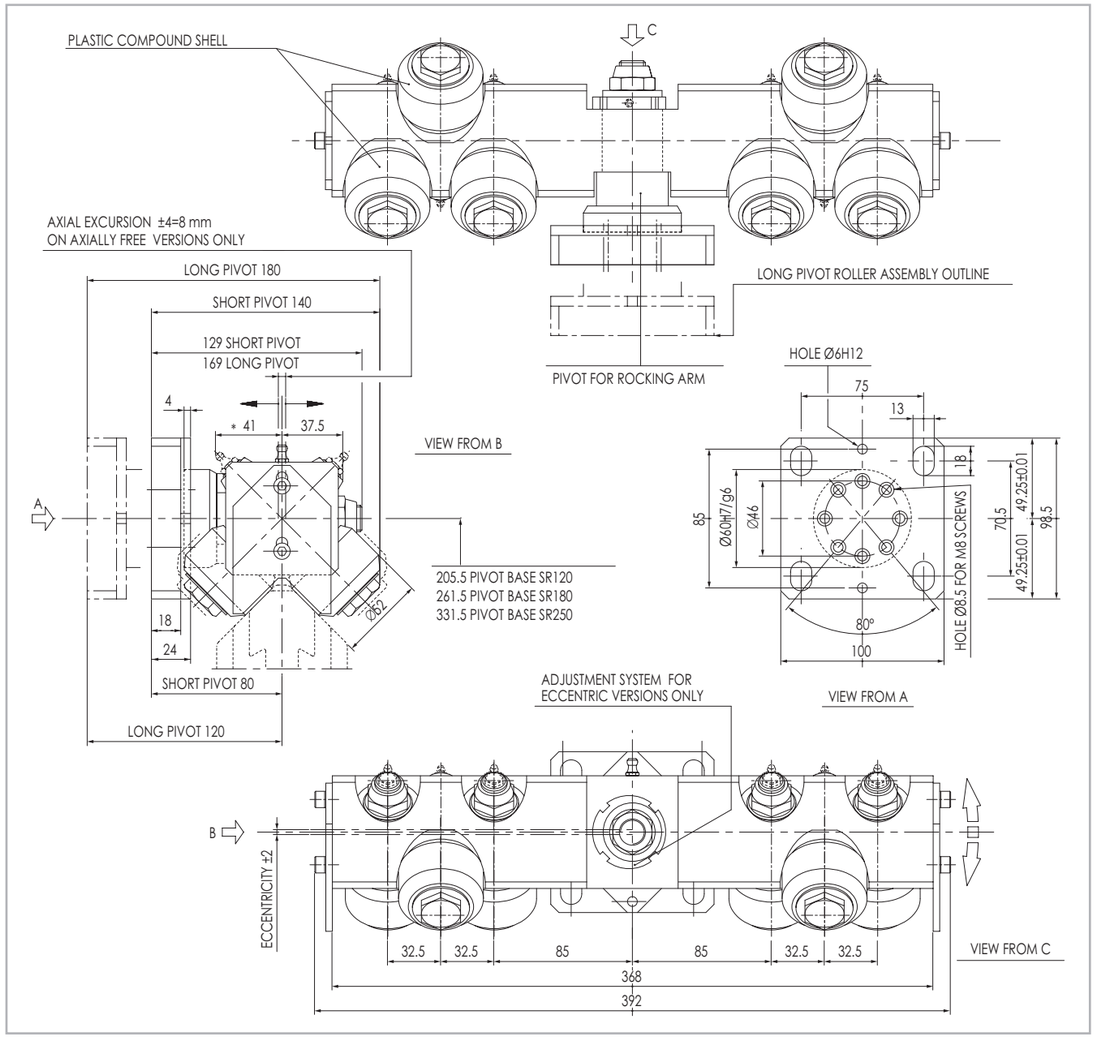

* Lubrication nipple mounted for periodic lubrication versions only

Fig. 118

Notes:

The axially free version of the assemblies are normally mounted on trolleys running on parallel rails. Coupled with axially constrained assemblies provide a flexible structure able to withstand minor misallignements between runways.

Assemblies without baseplate have the same code followed by "SP" (i.e. 55.1366/SP).

Roller assemblies reference			Axially constrained	Axially free	Rollers code
Short pivot	PERIODICAL LUBRICATION	ECC.	55.1423	55.3423	ROL-C052CCL-BP
		CONC.	55.1424	55.3424	
	LIFETIME LUBRICATION	ECC.	55.1425	55.3425	ROL-C052CCL-BV
		CONC.	55.1426	55.3426	
Long pivot	PERIODICAL LUBRICATION	ECC.	55.1419	55.3419	ROL-C052CCL-BP
		CONC.	55.1420	55.3420	
	LIFETIME LUBRICATION	ECC.	55.1421	55.3421	ROL-C052CCL-BV
		CONC.	55.1422	55.3422	

Tab. 14

Floating roller assembly with 8 rollers - short/long pivot

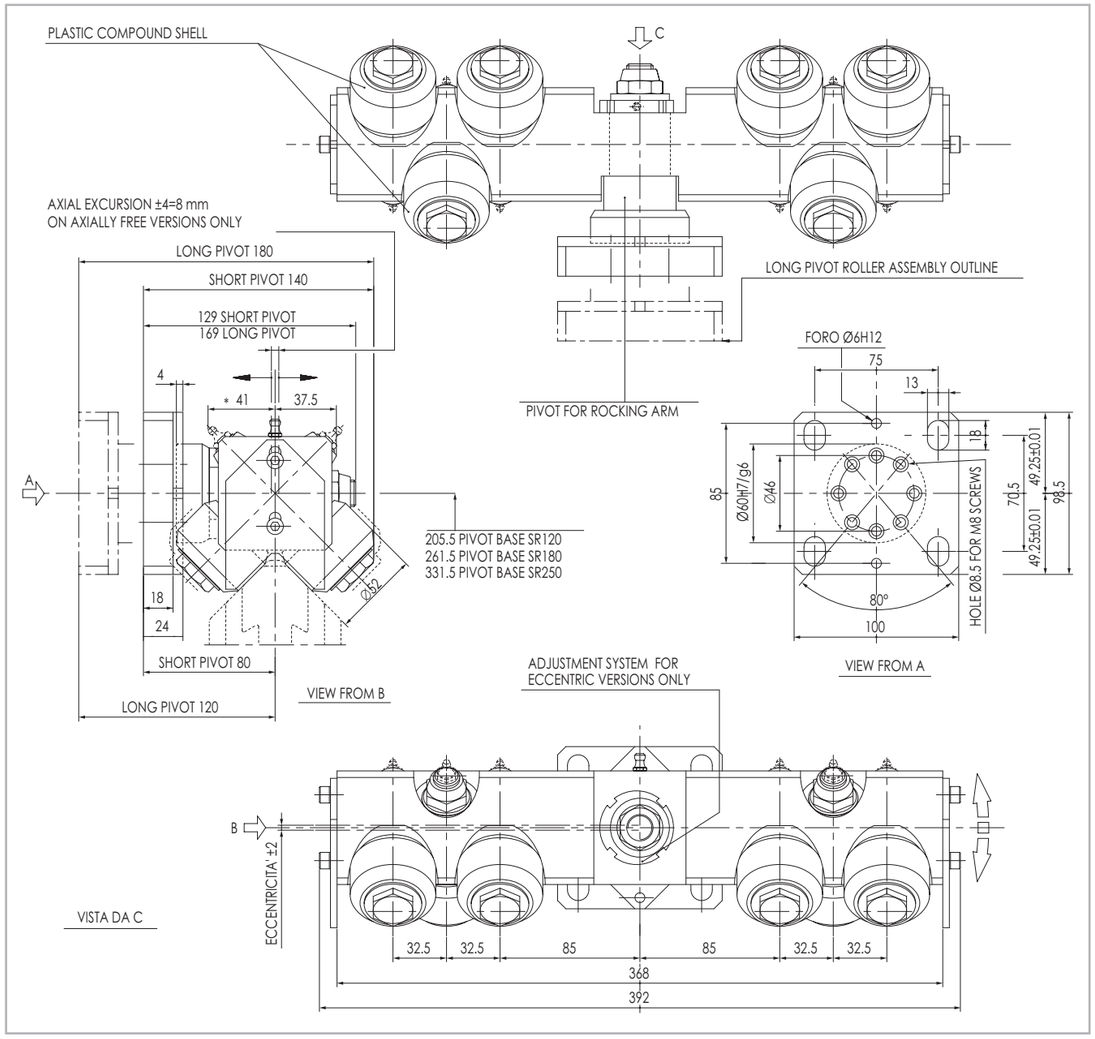

* Lubrication nipple mounted for periodic lubrication versions only

Fig. 119

Notes:

The axially free version of the assemblies are normally mounted on trolleys running on parallel rails. Coupled with axially constrained assemblies provide a flexible structure able to withstand minor misallignements between runways.

Assemblies without baseplate have the same code followed by "SP" (i.e. 55.1366/SP)

Roller assemblies reference			Axially constrained	Axially free	Rollers code
Short pivot	PERIODICAL LUBRICATION	ECC.	55.1366	55.3366	ROL-C052CCL-BP
		CONC.	55.1370	55.3370	
	LIFETIME LUBRICATION	ECC.	55.1367	55.3367	ROL-C052CCL-BV
		CONC.	55.1371	55.3371	
Long pivot	PERIODICAL LUBRICATION	ECC.	55.1368	55.3368	ROL-C052CCL-BP
		CONC.	55.1372	55.3372	
	LIFETIME LUBRICATION	ECC.	55.1369	55.3369	ROL-C052CCL-BV
		CONC.	55.1373	55.3373	

Tab. 15

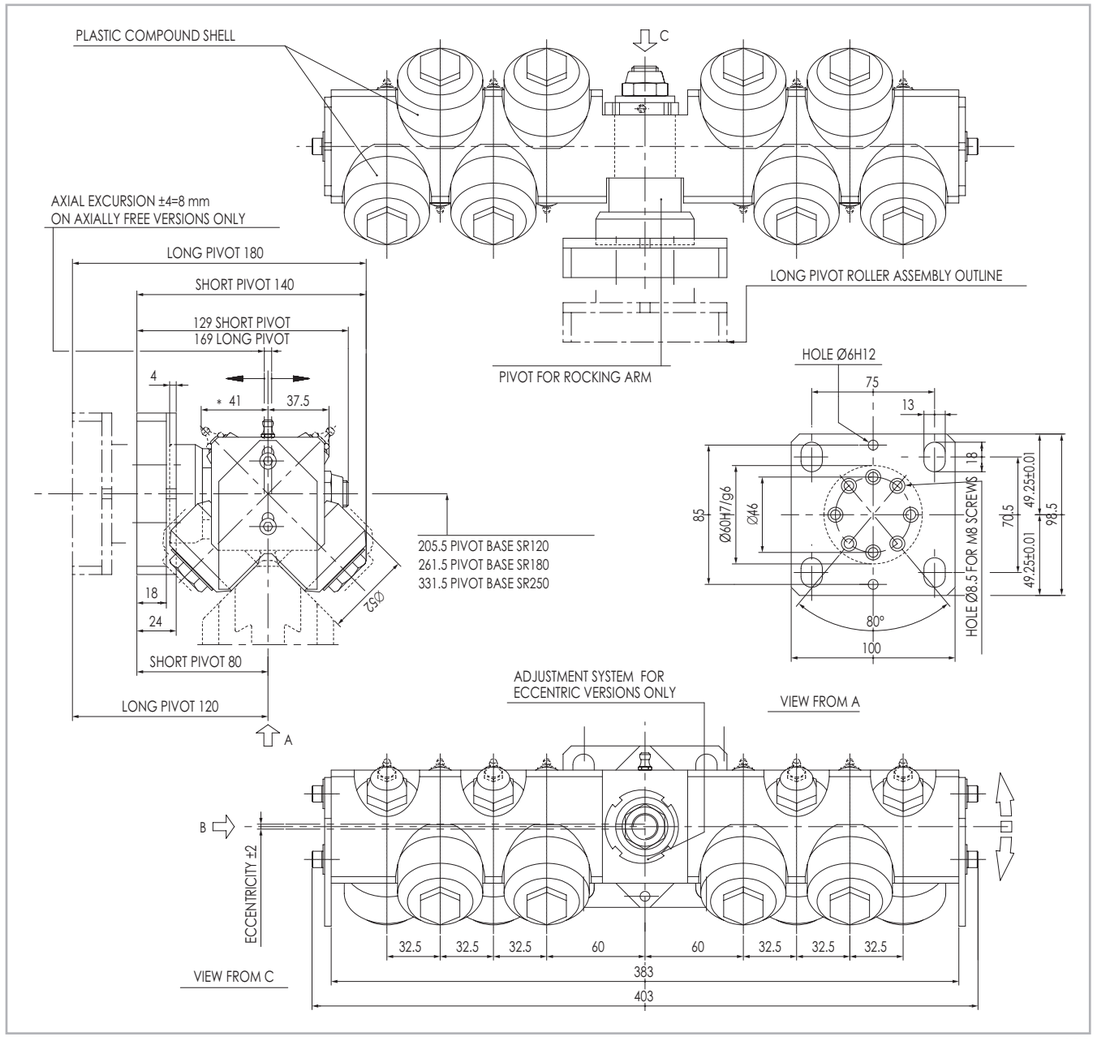

* Lubrication nipple mounted for periodic lubrication versions only

Fig. 120

Notes:

The axially free version of the assemblies are normally mounted on trolleys running on parallel rails. Coupled with axially constrained assemblies provide a flexible structure able to withstand minor misallignements between runways.

Assemblies without baseplate have the same code followed by "SP" (i.e. 55.1366/SP).

Roller assemblies reference			Axially constrained	Axially free	Rollers code
Short pivot	PERIODICAL LUBRICATION	ECC.	55.1143	55.3143	ROL-C052CCL-BV
		CONC.	55.1144	55.3144	
	LIFETIME LUBRICATION	ECC.	55.1145	55.3145	ROL-C052CCL-BV
		CONC.	55.1146	55.3146	
Long pivot	PERIODICAL LUBRICATION	ECC.	55.1147	55.3147	ROL-C052CCL-BP
		CONC.	55.1148	55.3148	
	LIFETIME LUBRICATION	ECC.	55.1149	55.3149	ROL-C052CCL-BV
		CONC.	55.1150	55.3150	

Tab. 16

Assembling diagram for rigid mounted rack

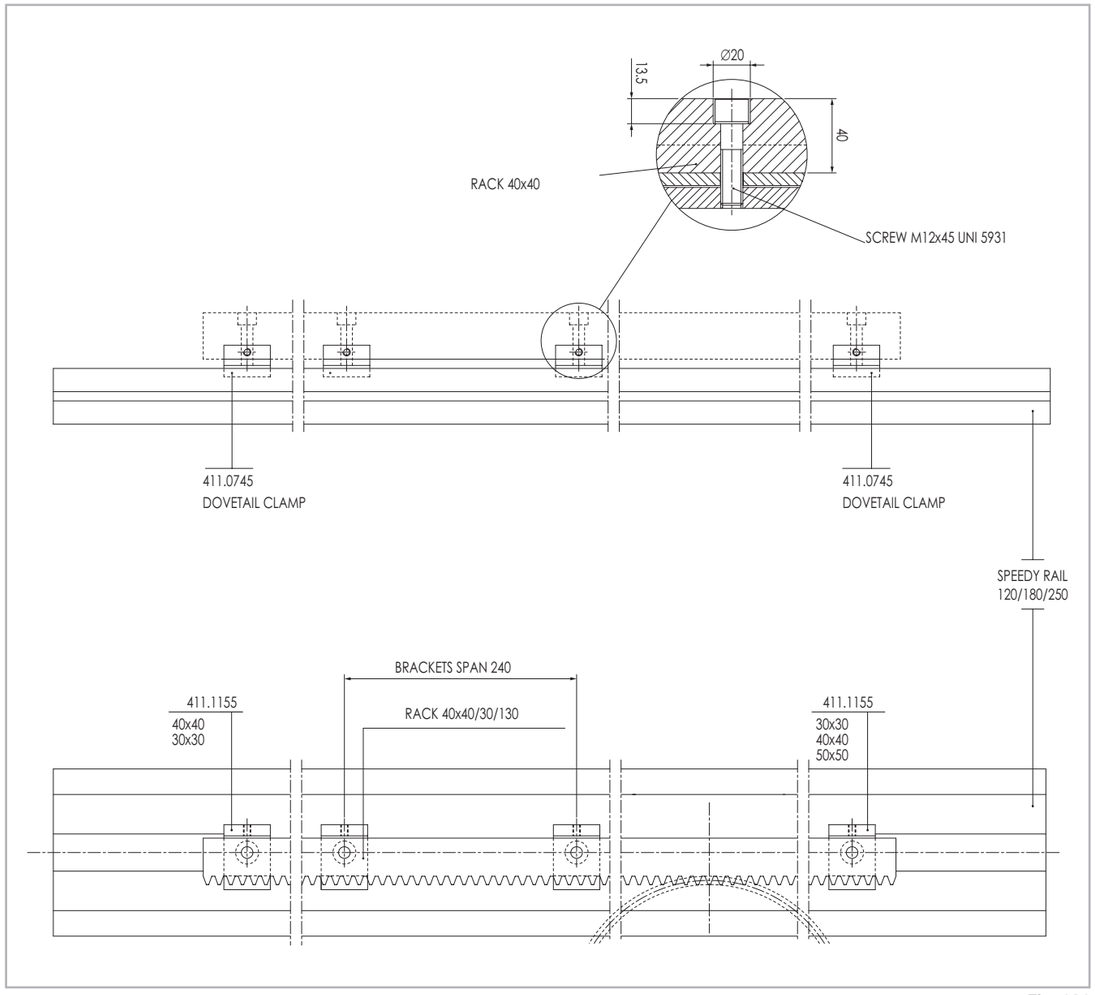

Fig. 121

Assembling diagram for floating rack

40X40 rack assembly diagram

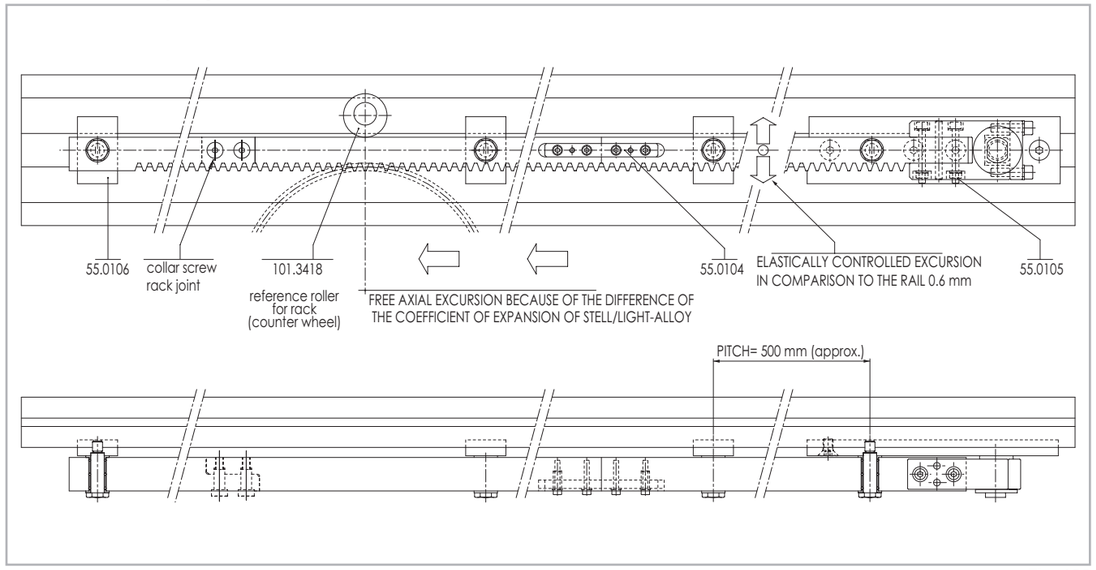

Fig. 122

The floating solution is presented as an alternative to the rigid configuration shown on page SR-50 the objective is to provide the proper setting and constant mash between rack and pinion thus the reference roller their adjustments independent from the roller assemblies ones. This solutions prevents unwanted overloads on the rollers-speedy rail coupling. That overload could happen on a rigid rack configuration with an incorrect mash setting. The choice of this advanced solution implies the machining of the rack either in one single rod or a number of rack sections connected (with bolts, lockpins etc) either through a key or machined, to half thickness, matching ends. With the "floating constraint" system, the rack has no horizontal backlash at all (direction of the motion) thus leaving 0.6 mm total vertical play and generating a limited elastic reaction only to the floating movement.

S
R

Standard racks

Straight toothed hardened rack

Cod.	C	D	d	E	F	H	L	N	P	Mod.
4111489	10	11	7	19,41	7	20	998,82	5	240	2
4111491	10	11	7	42,07	7	20	2004,14	9	240	2
4111499	17	14	9	19,41	9	30	998.82	5	240	3
4111501	17	14	9	38,92	9	30	1997,84	9	240	3
4111509	20,5	17	11	22,55	11	40	1005,10	5	240	4
4111511	20.5	17	11	45,21	11	40	2010,42	9	240	4

Tab. 17

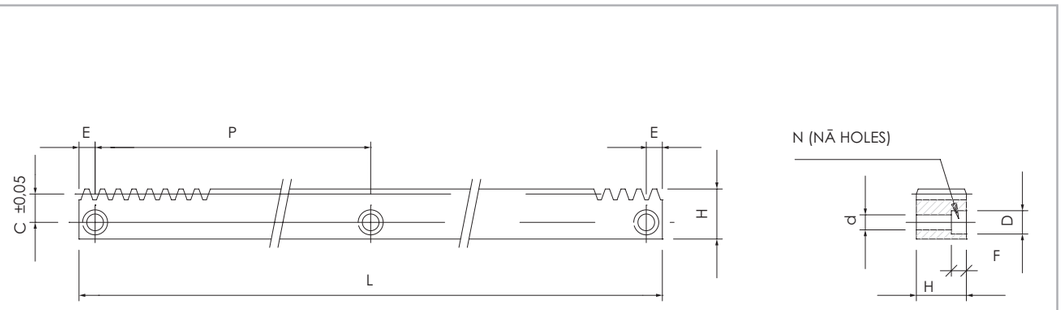

Fig. 123

Indexing rack mounting components

Rack	Mounting plates	Dovetails	Inserts
m2	4,4 5,4; 6,7	4,4 5,4	7,3; 10,3
m3	6,7	6,6	7,3; 10,3; 15,2
m4	6,7	6,6	7,3; 15,2

Tab. 18

Standard scrapers

Scraper for floating and full-block assemblies

411.0685

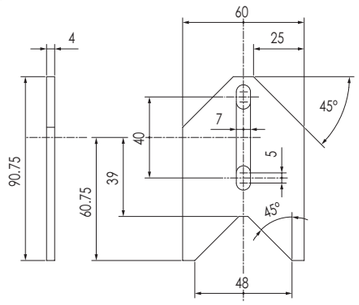

Fig. 124

Scraper for compact

411.0686

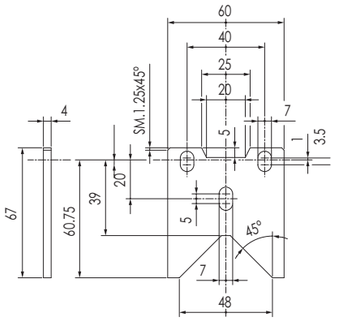

Fig. 125

Sliding brush for speedy rail and steel rail.
Brushes are kept against tracks by springs.

55.1000

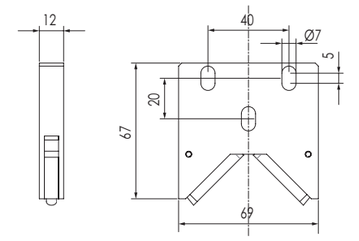

Fig. 126

Scraper for light floating rollers assemblies

55.1794.05

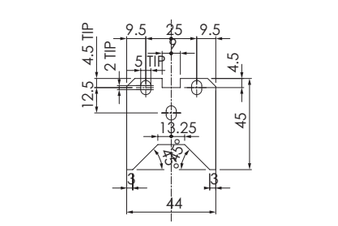

Fig. 127

Scraper for blindo beam roller assemblies

55047202

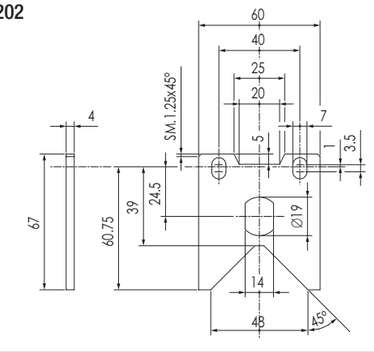

Fig. 128

Note:

All roller assemblies are equipped with the relate scrapers.

S
R

Speedy Rail 180

Wide body multi groove speedy rail guide and specifications

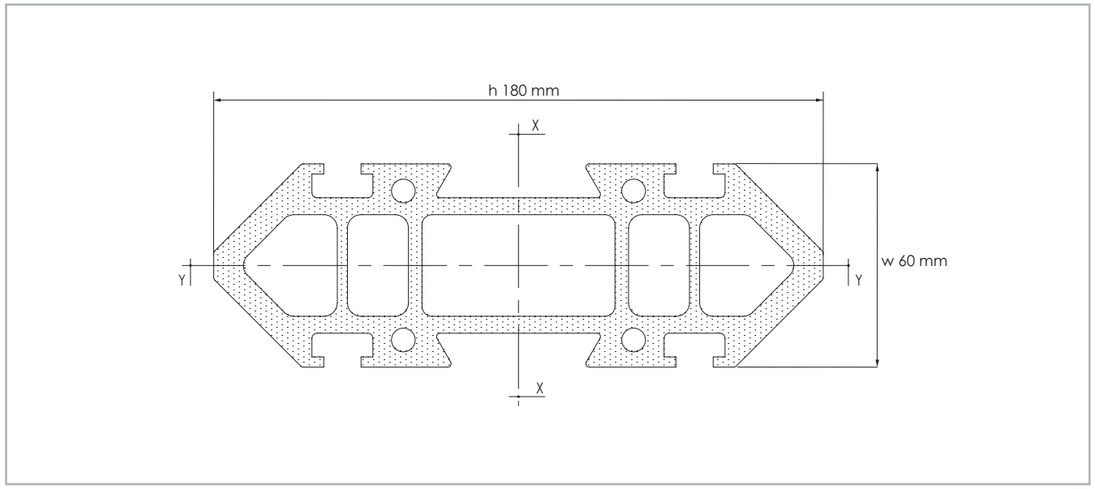

Fig. 129

Surface quadratic moment: X-X axis = 10.291.100 mm4 / Y-Y axis = 1.278.700 mm4.
Max. manufacturing tolerances = ±0.30 mm across opposite rolling surfaces.
Max. angular distorsion = ±20'/m.
Linear mass = 10.2 Kg/m.
Max. linear distorsion = ±0.7 mm/m.
Standard lengths: 3000-3500-4000-4500-5000-5500-6000-6500-7000-7500 mm.
External surface: deep hard anodizing

Roller assemblies and components

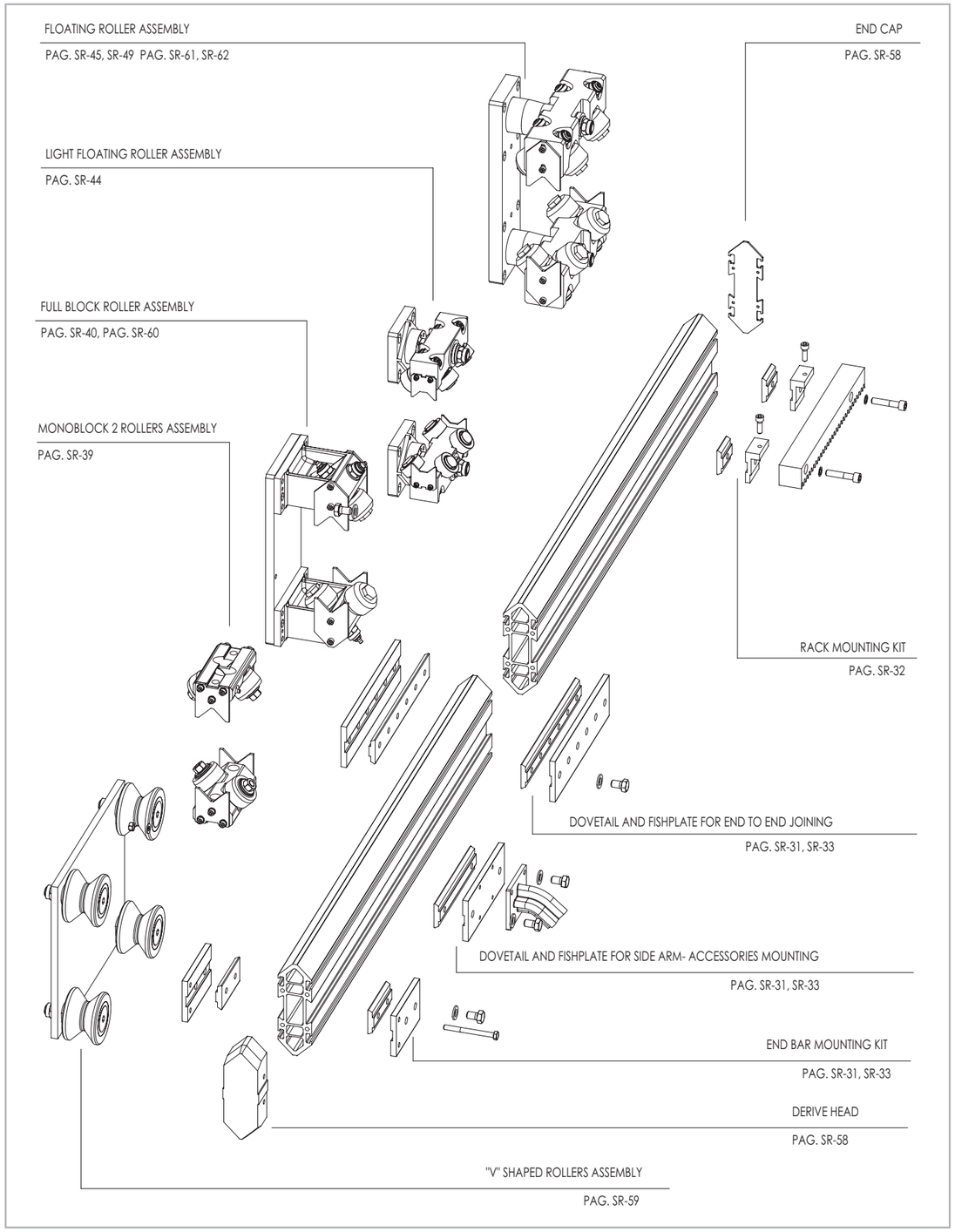

Fig. 130

Wide body multi groove speedy rail guide and specifications

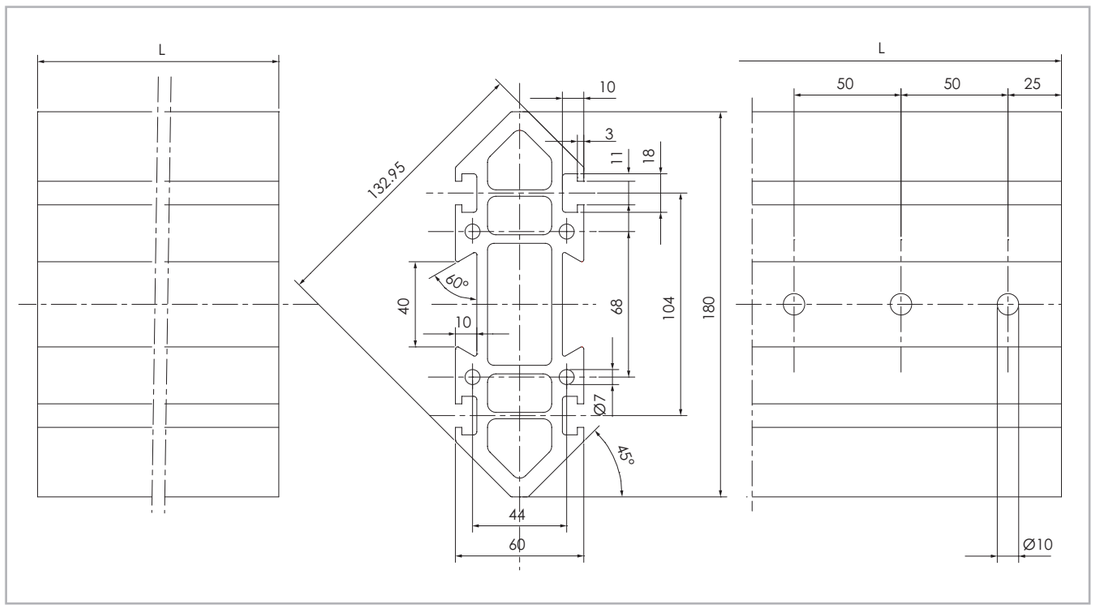

Fig. 131

SR180 -T

Speedy rail 180 with plain ends

SR180- F

Speedy rail 180 with drilled ends

Note:

Drillings on the bar end are required as a safety measure whith end-to-end joining in moving rails.

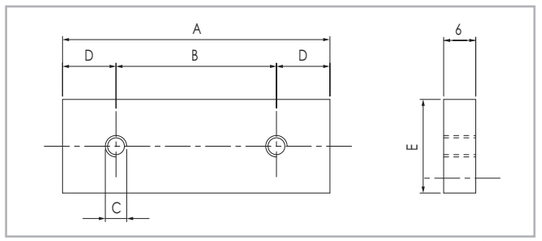

Fig. 132

Insert

A	B	C	D	E	Material	N° Holes	Cod.
496	60	M4	8	16	Burnished steel	9	411.2534
496	60	M5	8	16		9	411.2533
496	80	M6	8	16		9	411.3633

Tab. 19

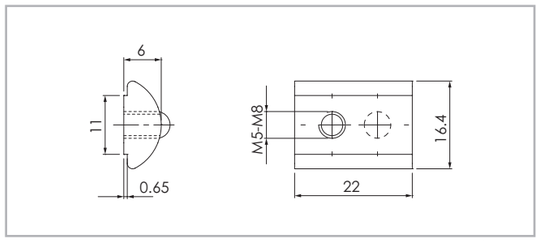

Fig. 133

Insert

A	B	C	D	E	Material	N° Holes	Cod.
-	-	M4	-	-	Zinc plated steel	1	411.1349
-	-	M5	-	-		1	411.1351
-	-	M6	-	-		1	411.1352
-	-	M8	-	-		1	411.1353

Tab. 20

Wide body multi groove speedy rail guide (SR180) uses the same dovetails, plates, fishplates and joining components of speedy rail standard (SR120 section) see page SR-31, SR-32, SR-33

Components for wide body multi groove Speedy Rail guide

Drive head

411.0696

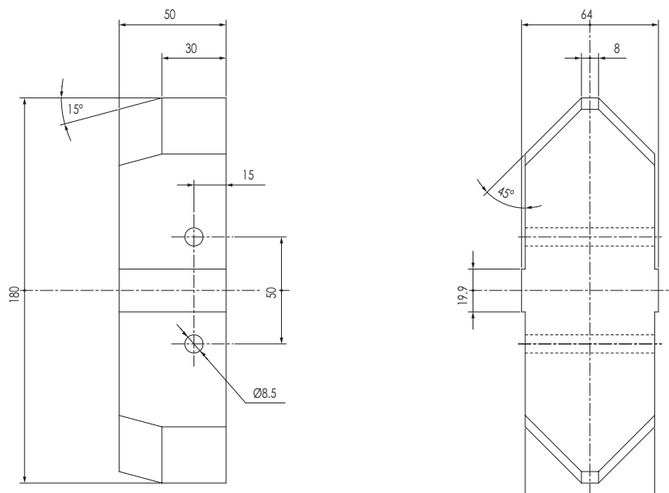

Fig. 134

Bolt for drive head

411.0744

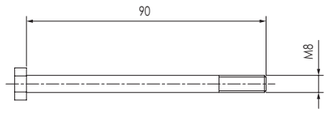

Fig. 135

Aluminium alloy end cap

411.1964

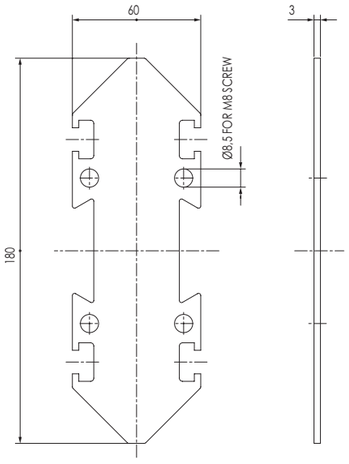

Fig. 136

Roller assembly with "V" shaped rollers

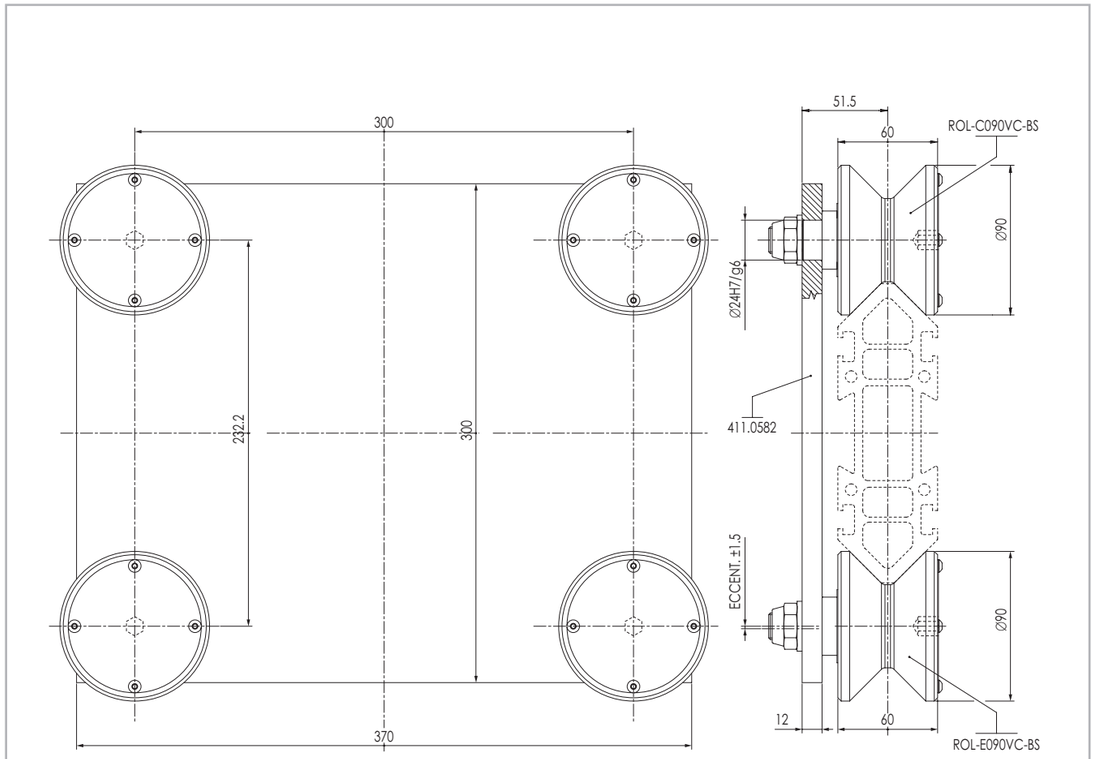

Fig. 137

55.1180
Heavy duty roller assembly with 4 rollers, two ROL-C090VC-BS and two ROLE090VC-BS.

Roller assembly with 4 rollers

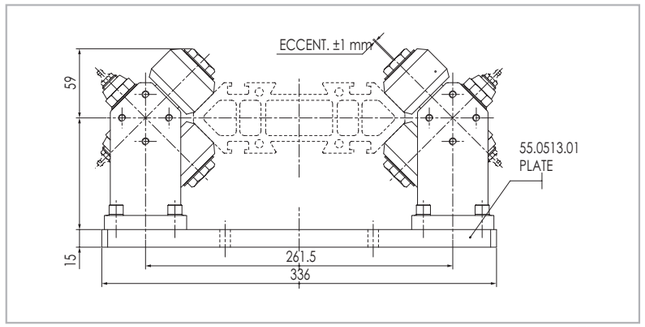

Fig. 138

55.0713
Roller assembly with backing plate 336x150x15 rollers with lifetime lubrication

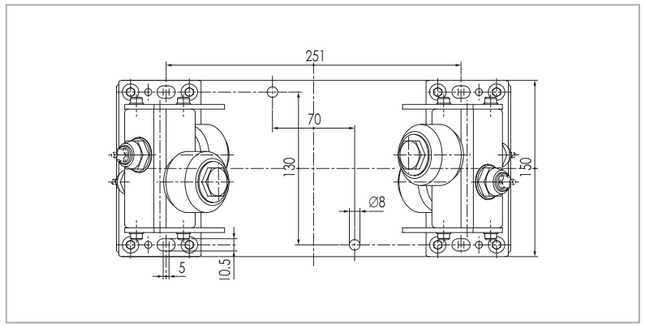

Fig. 139

55.0513
Roller assembly with backing plate 336x150x15 rollers with periodical lubrication

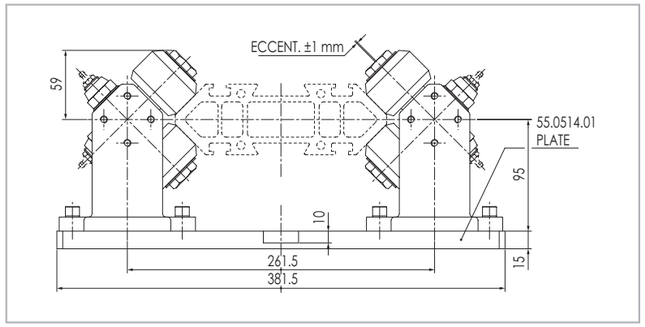

Fig. 140

55.0740
Roller assembly with backing plate 381.5x80x15 rollers with lifetime lubrication

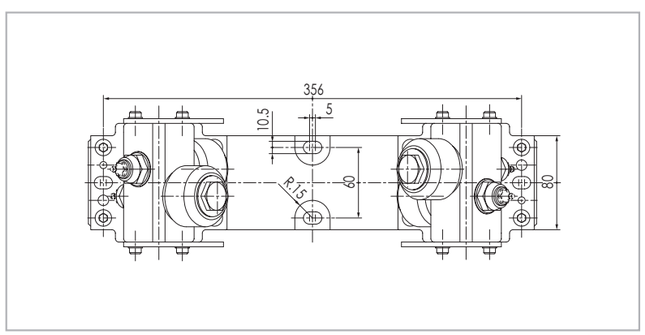

Fig. 141

55.0514
Roller assembly with backing plate 381.5x80x15 rollers with periodical lubrication

8 Rollers floating assembly - complete pairing

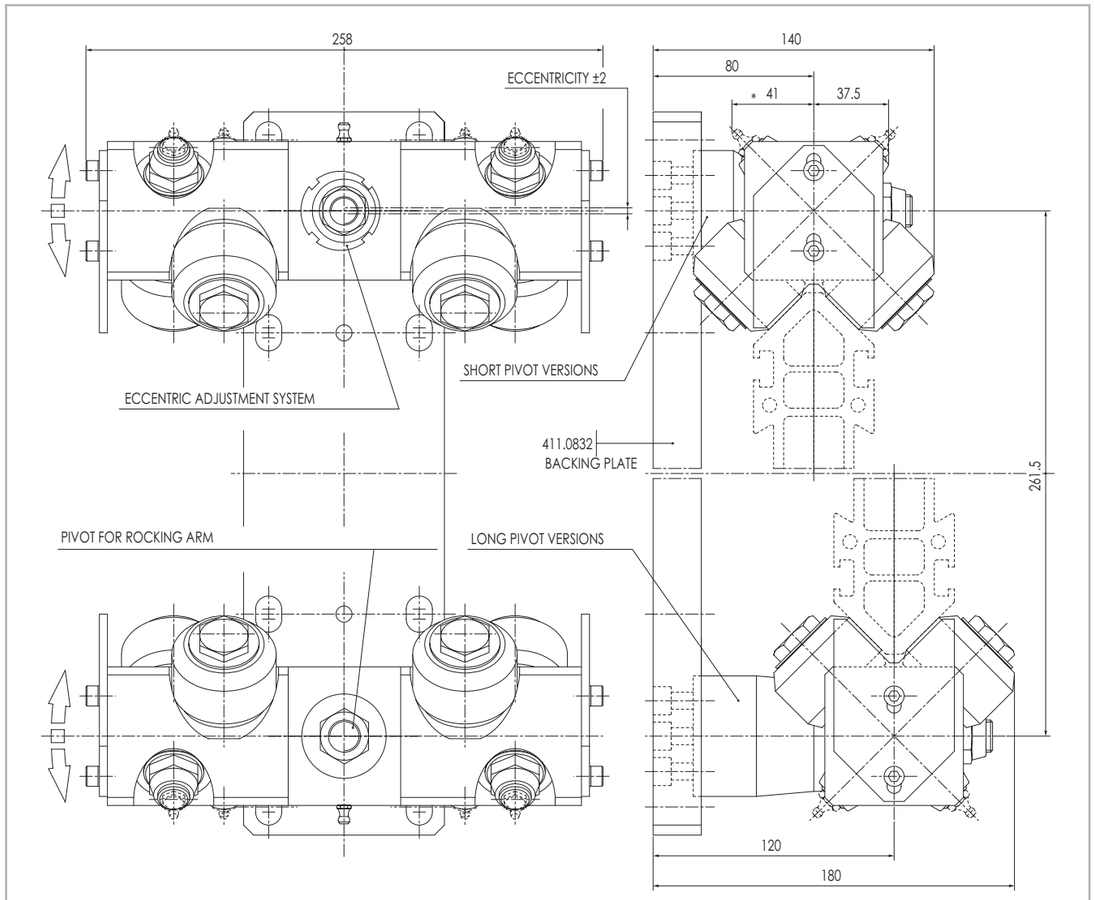

* Lubricator nipple mounted for periodic lubrication versions only

Fig. 142

Notes:

The complete pairing kit comes with one eccentric and one concentric roller assembly mounted on a backing plate. The concentric roller assembly should take the heavier load. For trolley on 2 parallel guides use on one guide axially free roller assemblies (± 4mm).

Pairing kits are available with two roller assemblies having the same number of rollers. For different combinations (i.e. upper assembly with 6 rollers and lower assembly with 4 rollers, two eccentric rollers assemblies) please order the assemblies separately, without baseplate and add the backing plate shown in this page. However we suggest to verify always with our technical department prior to ordering.

Pivot type	Lubrication type	Axially constrained	Axially free
Short pivot	Periodical	55.1380	55.3380
	Lifetime	55.1381	55.3381
Long pivot	Periodical	55.1382	55.3382
	Lifetime	55.1383	55.3383

Tab. 21

Backing plate for floating roller assemblies

Backing plate - Material: hard anodized aluminium alloy

411.0832

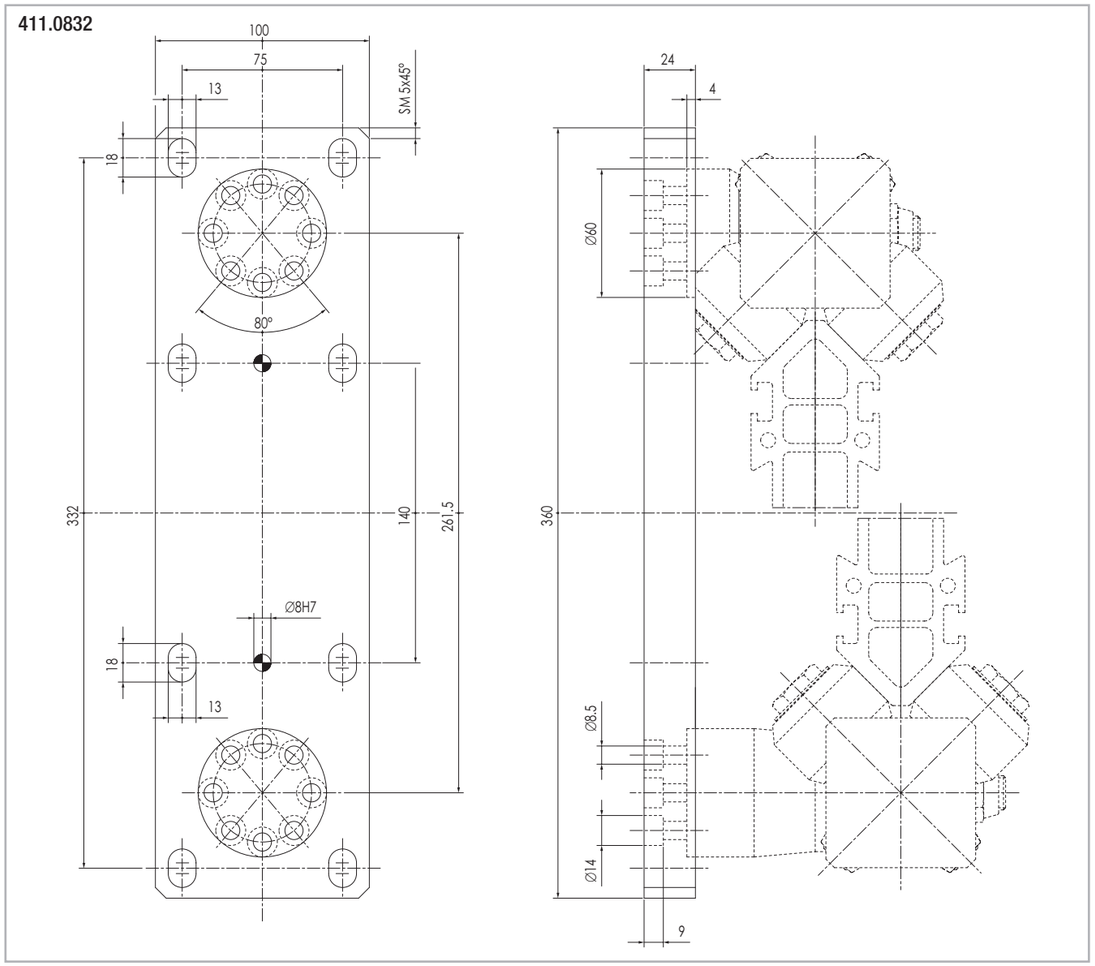

Fig. 143

Fishplate for mod.2 Rack mounting on SR180, SR250 T grooves

411.1179

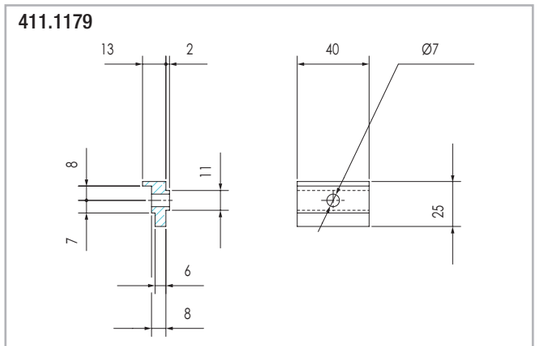

Fig. 144

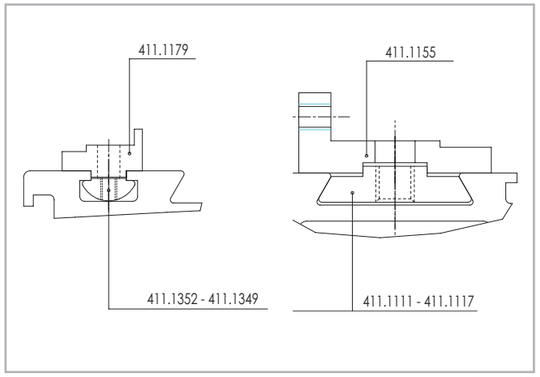

Fig. 145

For rack mounting plate mod.2 Use insert 411.1352

Angular mounting bracket for floating roller assemblies

Steel bracket for single floating roller assemblies long pivot without baseplate

411.0896

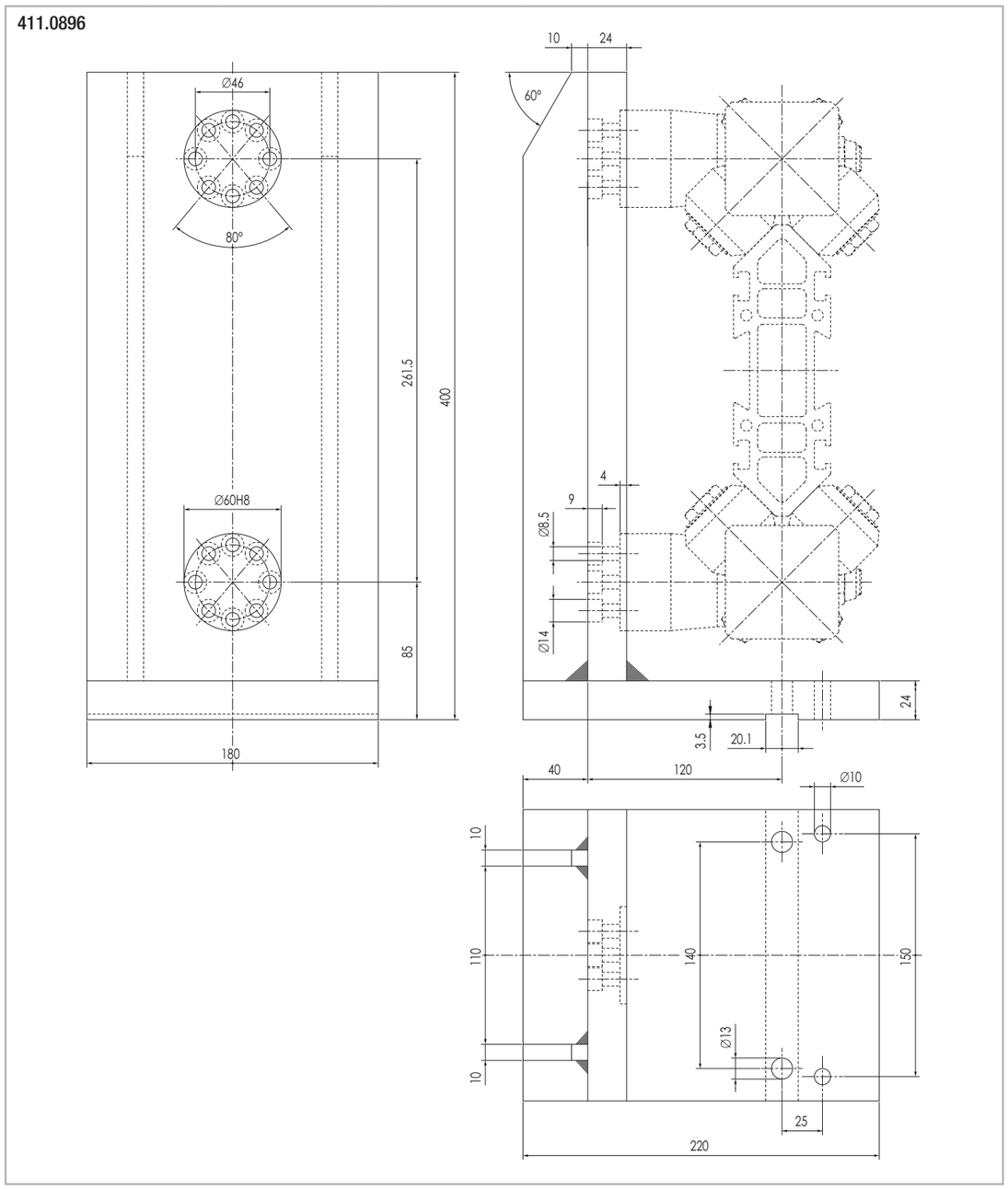

Fig. 146

Note:

The lower groove allows to mount the bracket onto a new unibeam supporting profile.

Speedy Rail 250

Super wide body multi groove Speedy Rail guide and specifications

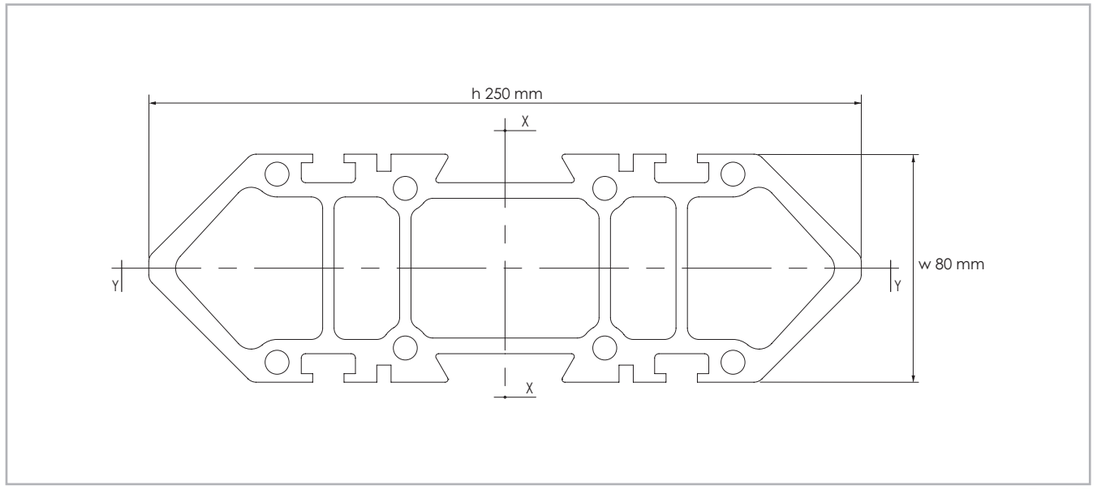

Fig. 147

Surface quadratic moment X-X axis = 27.345.460 mm4 / Y-Y axis = 4.120.150 mm4.

Max. manufacturing tolerances = ±0.65 mm across opposite rolling surfaces.

Max. angular distorsion = ±30'/m.

Linear mass = 15.20 Kg/m.

Max. linear distorsion = ±0.5 mm/m.

Standard lengths: 3000-3500-4000-4500-5000-5500-6000-6500-7000-7500 mm.

External surface: deep hard anodizing

Roller assemblies and components

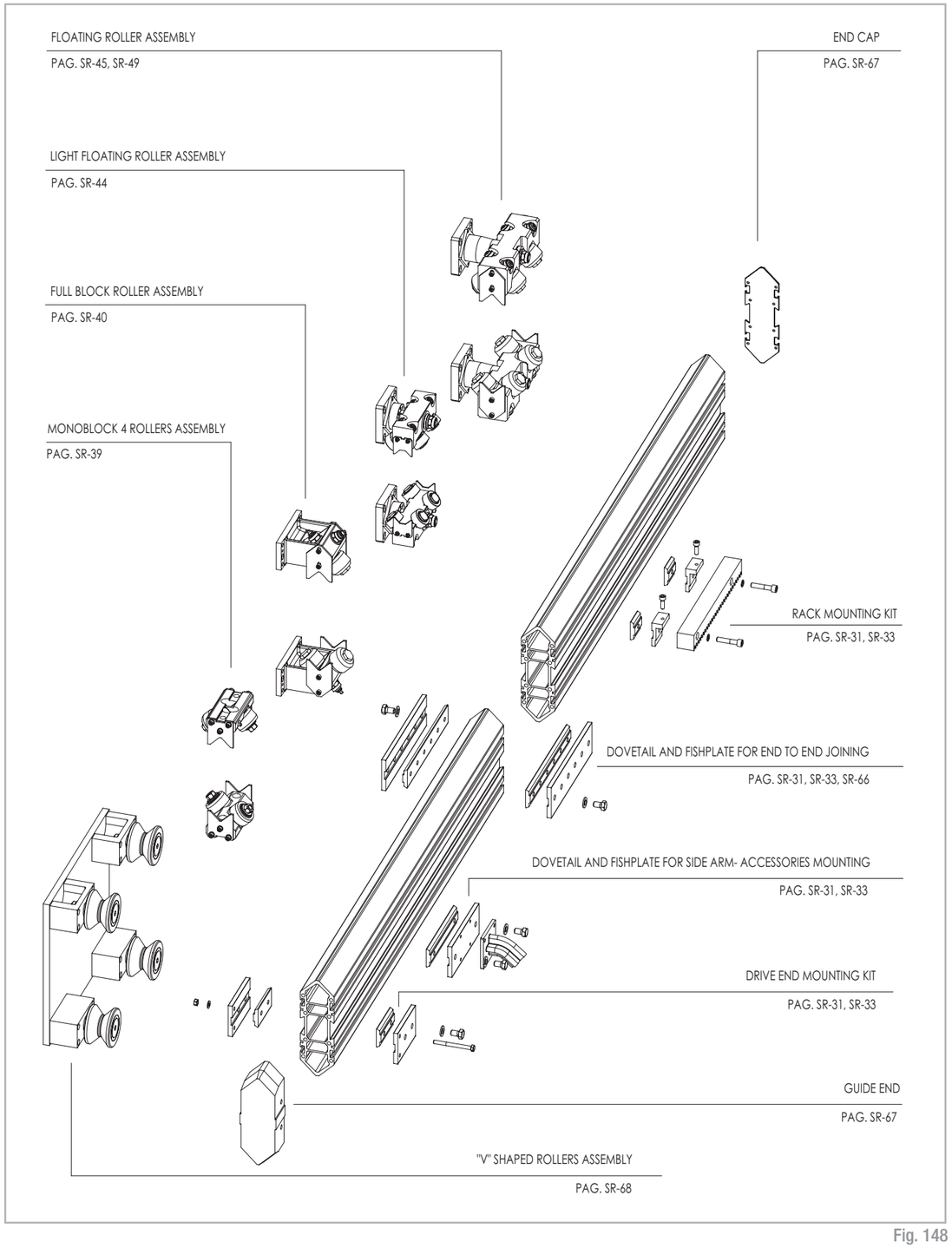

Fig. 148

Superwide body multi groove speedy rail guide and specifications

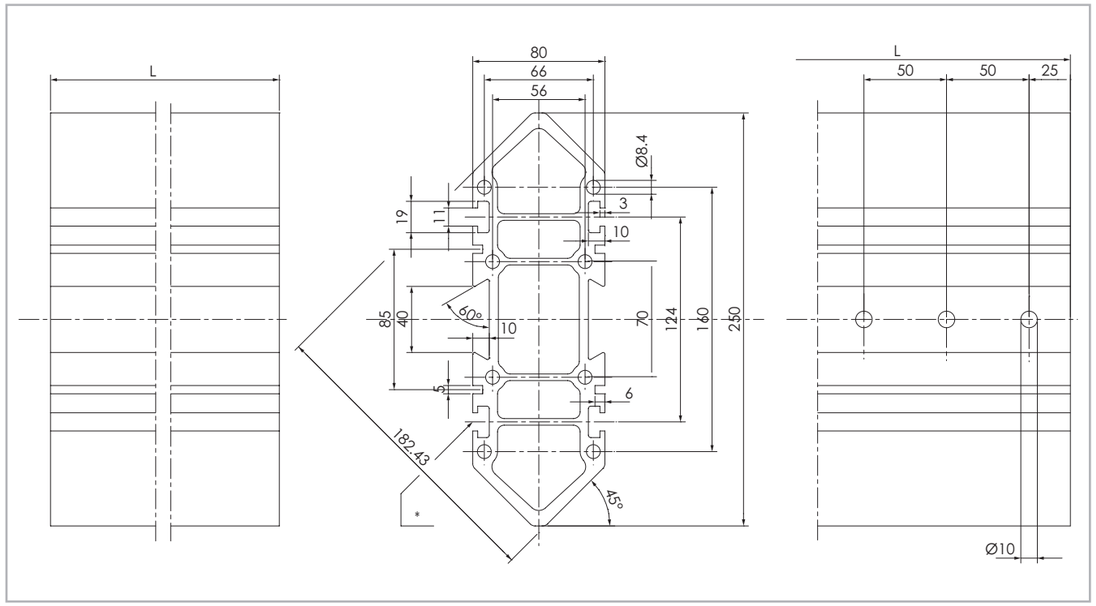

Fig. 149

SR250 -T
Speedy Rail 250 with plain ends

SR250 -F
Speedy Rail 250 with drilled ends

Note:
Drillings on the bar end are required as a safety measure whith end-to-end joining in moving rails.

Super wide body multi groove speedy rail guide (SR250) uses the same dovetails, plates, fishplates and joining components of speedy rail standard (sr 120m section) see pages SR-31, SR-32, SR-33. Special plates, 411.0960, are also available for end-to-end joining in heavy duty applications.

* Particularly for side grooves the same inserts for SR180 (pag.SR-57) are used.

Steel fishplates for end to end joining

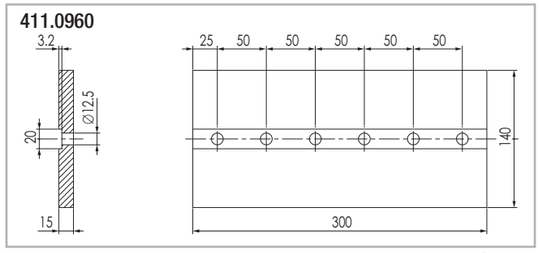

Fig. 150

Components for super wide body speedy rail guide

Spacer

411.0957

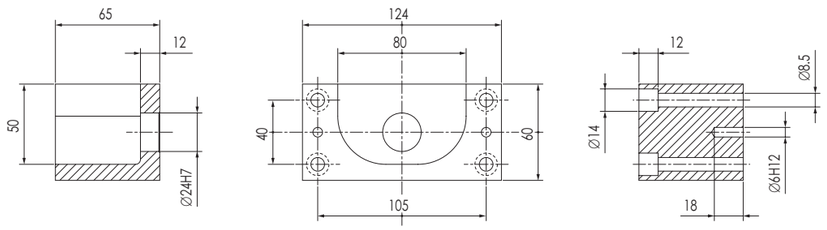

Fig. 151

Spacer

411.0997

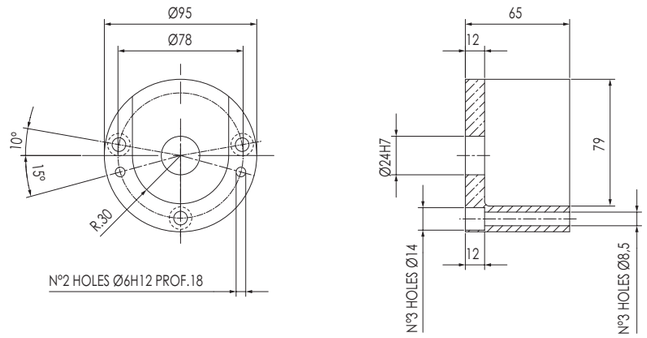

Fig. 152

Aluminium alloy end cap

411.1963

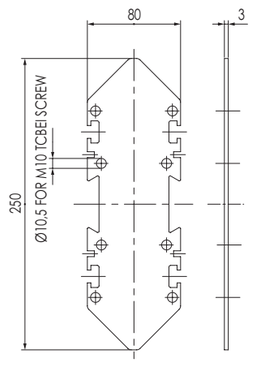

Fig. 153

Elastomer drive head

411.1015

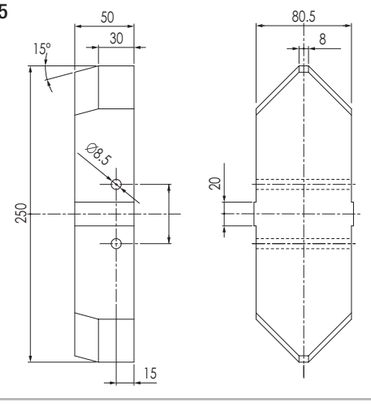

Fig. 154

Roller assembly with "V" shaped rollers

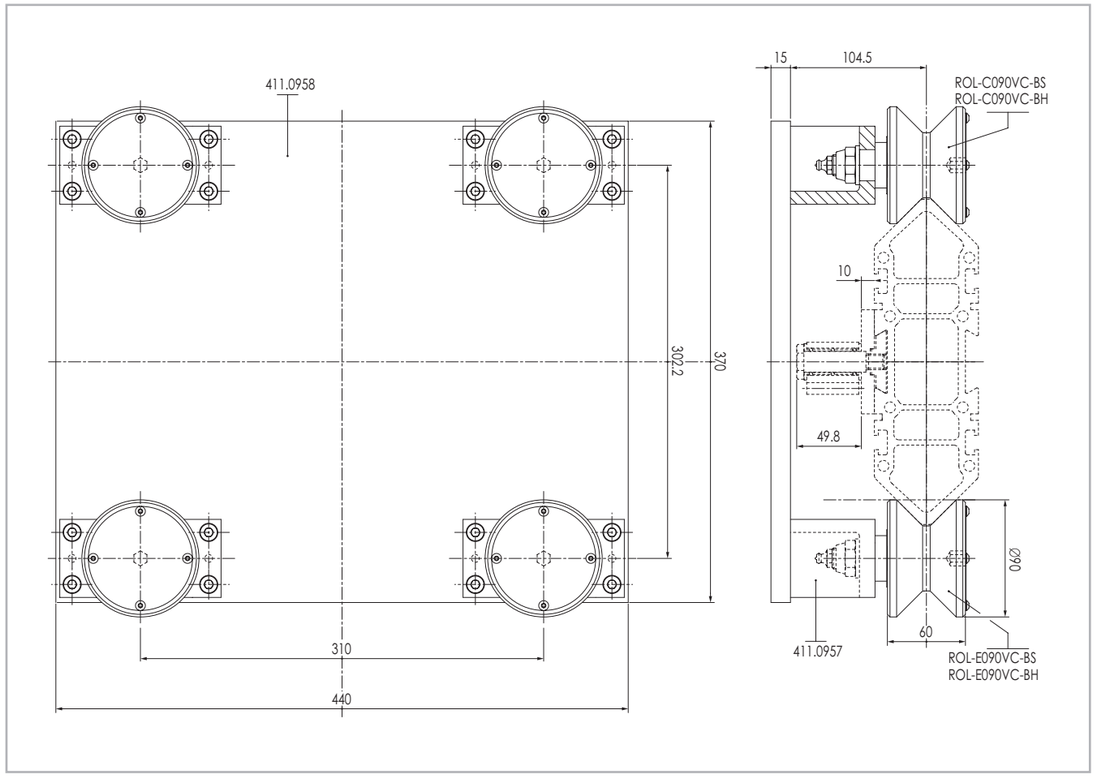

Fig. 155

55.0808

Roller assembly with 4 rollers, two ROL-C090VC-BS and two ROL-E090VC-BS

Fishplate for mod.2 Rack mounting on, SR180, SR250 T grooves

411.1179

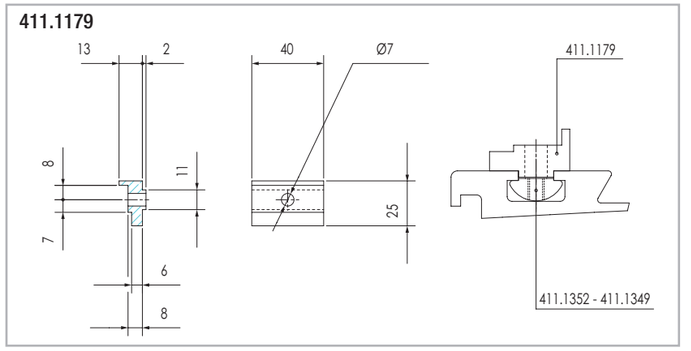

Mod.2 straight toothed Fig. 156

For rack mounting plate mod. 2 use insert 411.1352

Fishplate for mod. 3 and 4 rack mounting on dovetail grooves

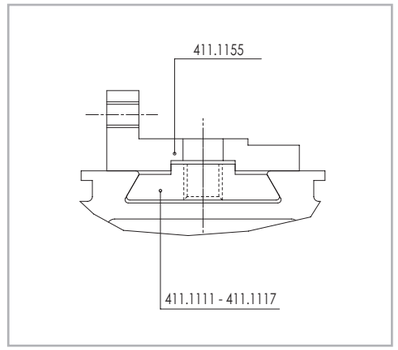

Mod.3 e 4 Fig. 157

S
R

Technical detail

Mechanical and technological components specifications

Guides	Accessories	Material	Tensile strength
Speedy Rail SR 35 Speedy Rail SR C 48 Speedy Rail Mini SR 60 Speedy Rail Middle SR 90 Speedy Rail Standard SR 120 Speedy Rail Wide Body multiple grooves SR 180 Speedy Rail Super Wide Body Multiple Grooves SR 250	Dovetails Fishplates	Lega di alluminio da bonifica	Tensile strength: R = 245 N/mm^2 Yield stress: S = 195 N/mm^2 Elongation: 10% ÷ 13% Modulus of elasticity: E=70000 N/mm^2 G=26000 N/mm^2 Mass density: 2,7 kg/dm^3 Coefficient of expansion: K=23x10-6 mm/mm°C

Tab. 22

Components	Material	Tensile strength
Base plates Rocking arms Compact rollers assembly body	Aluminum Alloy	Tensile strength: R = 275 N/mm^2 Yield stress: S = 200 N/mm^2 Elongation: 10% ÷ 13% Modulus of elasticity: E=70000 N/mm^2 G=26000 N/mm^2 Mass density: 2,7 kg/dm^3
Monoblock roller assembly case Full-block roller assembly case		Tensile strength: R = 225 N/mm^2 Yield stress: S = 142 N/mm^2 Elongation: 3% ÷ 5% Modulus of elasticity: E=70000 N/mm^2 G=26000 N/mm^2 Mass density: 2,7 kg/dm^3

Tab. 23

Treatments on all light alloy components

Heat treatment	Age hardening
Surface treatment	Surface hardening: Low temperature deep anodizing to give a surface hardness of 600 ÷ 700 HV Surface layer depth: 50÷60 micron (0.050÷0.060 mm) for rails, 25÷35 micron (0.025÷0.035 mm) for supports bodies and plates. Chemical composition of surface layer: $Al_2 O_3$ Fusion temperature of surface layer: 2100° C Surface layer electric resistance at 20°C: 4x10^{15} Ohm/cm/cm^2 Dielectric constant: approx. 7.5 Puncture voltage of surface layer: 1500 V

Tab. 24

Rollers

Speedy Rail system

Rollers are manufactured with a steel shaft, high quality ball-needle bearings, rubber seals labyrinth.

The external surface of the roller is machined with a slightly convex profile, finished with a sintered plastic compound having the following properties:

Tensile strength:	85 N/mm^2
Rockwell hardness:	120 R
Melting point:	+ 220 °C
Max. continuous working temperature:	+80°C
Min. continuous working temperature:	- 30°C
Dynamic friction coefficient:	0,25

Chemical resistance: excellent to mineral and organic oils; good to basic solutions; fairly good to acid solutions.

We always recommend a preliminary test for the rollers in the actual working environment.

Roller assemblies

Roller assemblies with four (4) rollers have the two inner rollers mounted on a plain, concentric sleeve while the outer ones have an eccentric sleeve. This setup allows the proper adjustments to compensate dimensional tolerances on the rail. Two roller assemblies have one roller with an eccentric sleeve and the other with a concentric setup.

Floating roller assemblies: all the rollers on this type of support have a concentric sleeve.

The adjustments are made possible by the pivot settings (hub), which comes either with an eccentric or concentric setup.

Custom configuration for roller assemblies are available upon request.

Rollers adjustments

Adjusting the rollers on a single section rail requires the rollers in a position that allows them to touch the running surface with no play - slightly pre-loaded- A different and more accurate setting is required when the runway is assembled with multiple sections.
The rollers setting must leave 0.15 ÷ 0.20 mm backslack (play) from the rail –Use a feeler gauge for best results- The setting requirement is determined by the dimensional tolerances on the rail sections.

Torque settings

Bolt purpose torque:

M6	(fixing scrapers)	10 Nm
M8	(fixing assemblies)	25 Nm
M10	(fixing assemblies)	45 Nm
M12	(dovetails & fishplates)	55 Nm
M16	(fixing rollers)	75 Nm

Drillings of the end bars:
this are made in order to create a security connection for two or more moving rails that have an end to end joining, through the shaft of the special screws that are used for fixing the fishplate and the dovetails. This additional connection is not a guarantee for the precision but has got the aim to avoid injuries in the case that the moving rails unhook.

Scrapers

Are manufactured from a sintered compound, self lubricating, having a low friction coefficient. All the roller assemblies come with the scrapers. The purpose of this item is to keep foreign bodies out of the rollers. Scrapers shall never be set to slide on the rail.

They are equipped with mounting and adjustment holes so that a 0.2 mm minimum clearance can be applied.
For application environments with an excessive pollution or dust use the mobile brush assembly.

Drive head

For Speedy Rail profiles. Machined from a hard polymer rubber molding - Shore A hardness 90÷95 - Normally mounted on the bar ends when the system has a rail that moves in and out the roller assemblies. This rubber end piece allows the rail to be easily guided into the roller assemblies.

Lubrication

There is no need to lubricate our Speedy Rail profiles. However, lubricant is recommended on Steel rail profiles when used with steel rollers. Best results are obtained using our standard oiler. It provides continuous lubrication and keeps the rail clean.
Rollers: standard rollers with regular maintenance/greasing schedule have its own grease nipple. Please use grade 3 grease for working temperature of 10°C÷60°C.
Grade 2 grease is required when the working temperature drop below 10°C. Lubricate every 5-6 months.
For the “lifetime” lubrication version, the rollers are supplied with a high tech grease.
The grease nipples are removed from the assemblies since this configuration does not require any periodic lubrication.

Life testing

Speedy rail and system with plastic shell rollers
The max applicable load, stated in the description of each roller of the Speedy Rail systems, is determined depending on the characteristics of the plastic compound shell. The cylindrical rollers of Speedy Rail system can be used with translation speed up to 15 metres/second and with accelerations and decelerations up to 10 metres/sec2. For Speedy Rail and Speedy Rail C 48 systems with “V” shaped and for Speddy Rail 35 plastic compound rollers, the max translation speed is of 8 metres/second while the max accelerations and decelerations are of 8 metres/sec2. For higher dynamics please contact our technical department. For all roller types the working temperature limits are -30°C and +80°C.
The rollers with plastic compound shell do not damage themselves and do not damage the rails where the invert direction, even in presence of high accelerations and decelerations. Speedy Rail C 48 and Speddy Rail 35 systems has good performance and excellent life even in presence of dust. With stresses on the rollers within the max values stated on the catalogue, the Speedy Rail C 48 and Speddy Rail 35 systems enable a life time of more than 80.000 km. The life can be lower due to excessive presence of dust or pollutants.

Summary table Speedy Rail guides

Profile type and code N°	Simple profiles mechanical and specifications	Surface quadratic moment I (X) mm4	Surface quadratic moment I (Y) mm4	Section modulus W (X) mm3:	Section modulus W (Y) mm3:	Section mm2	Distance d mm: (Roller contact axis)	Linear mass t kg/mt
SR 35 SIMP - T SIMP - F	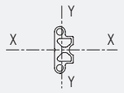	17.779	3.665	1016	118	203	/	0.60
SR C 48 CR48 - D CR48 - T CR48 - F	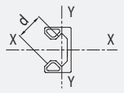	152.026	36.823	6334	2045	526	28.26	1.42
SR Mini (60) SR060 - T SR060 - F	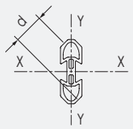	138.600	18.000	4.620	1.800	470	29	1,27
SR Middle (90) SR090 - T SR090 - F	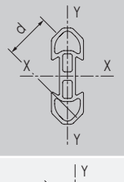	630.000	76.500	14.250	5.170	965	39,6	2,6
SR Standard (120) SR120 - T SR120 - F	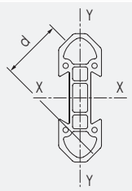	2.138.988	259.785	35.650	12.989	1.645	56,1	4,4
SR Wide Body (180) SR180 - T SR180 - F	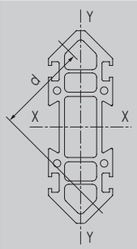	10.291.100	1.278.700	114.345	42.620	3.730	95,7	10,2
SR Super Wide body (Speedy Rail 250) SR250 - T SR250 - F	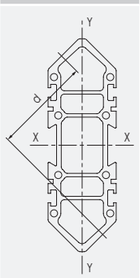	27.345.460	4.120.150	218.760	103.000	5.609	113.95	15.2

Tab. 28

Loads on a 4 'V' rollers trolley

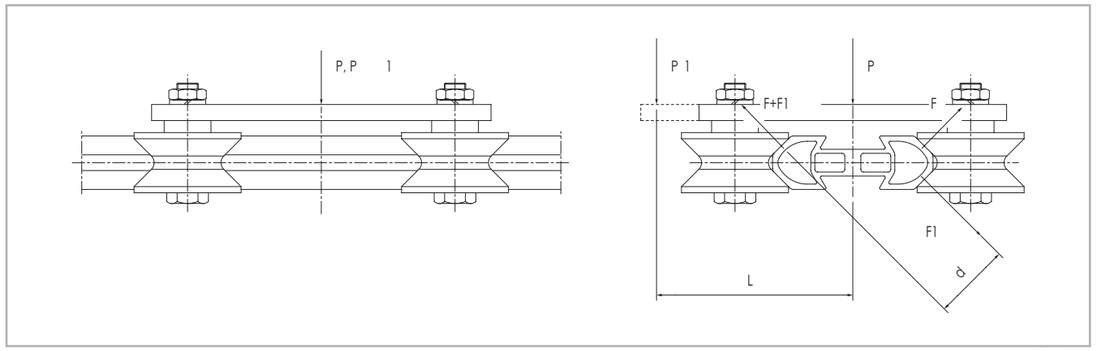

Fig. 158

Rollers load with force 'P' applied on the rail axle

$F = P \cdot \left(\frac{1}{2 \cdot \sqrt{2}}\right)$ (N)	$F_r = F_a = F \cdot \left(\frac{1}{\sqrt{2}}\right)$ (N)	P, P_1 = Applied forces (N) F_r = Radial load (N) F_a = Axial load (N)

Fig. 159

Rollers load with 'P_1' force applied at 'L' distance (mm) from rail centerline

$F = P_1 \cdot \left(\frac{1}{2 \cdot \sqrt{2}}\right)$ (N)	$F_1 = \frac{P_1 \cdot L}{2 \cdot d}$ (N)	$F_r = F_a = \frac{F+F_1}{\sqrt{2}}$ (N)	P, P_1 = Applied forces (N) F_r = Radial load (N) F_a = Axial load (N)

Fig. 160

Important: the load on most loaded rollers must be, for each roller type, less or equal to the corresponding rated load on the catalogue.

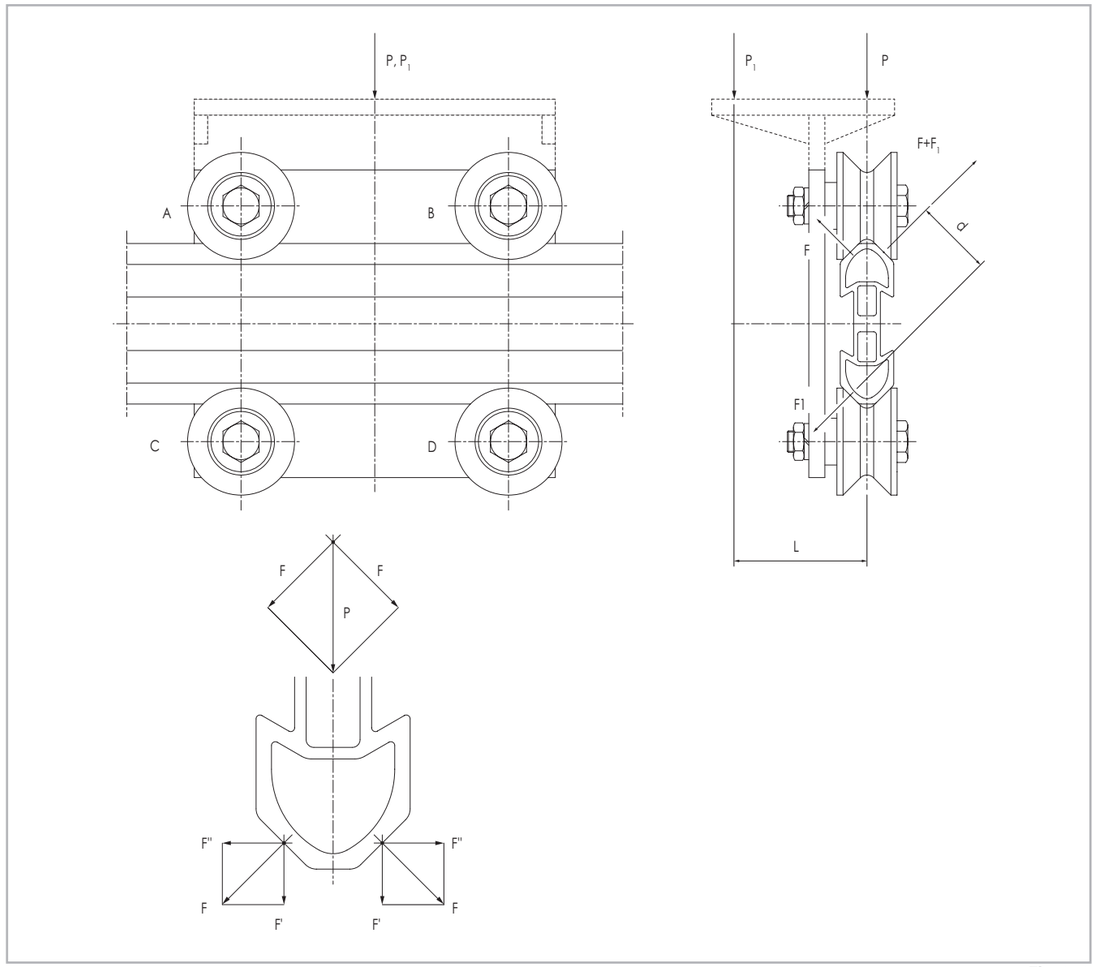

Fig. 161

$F' = F'' = \frac{F}{\sqrt{2}}$

A, B Concentric rollers
C, D Eccentric rollers
P, P_1 = Applied forces (N)
F_r = Radial load (N)
F_a = Axial load (N)

Fig. 162

Rollers load with force 'P' applied on the rail axle

$F_r = \frac{P}{2}$ (N)

$F_a = 0$ (N)

A, B Concentric rollers
C, D Eccentric rollers
P, P_1 = Applied forces (N)
F_r = Radial load (N)
F_a = Axial load (N)

Fig. 163

Rollers load with 'P_1' force applied at 'L' Distance (mm) from rail centerline

$F = P_1 \cdot \frac{1}{2 \cdot \sqrt{2}}$ (N)

$F_1 = \frac{P_1 \cdot L}{2 \cdot d}$ (N)

$F_r = \sqrt{2}\ F + \frac{F_1}{\sqrt{2}}$ (N)

$F_a = \frac{F_1}{\sqrt{2}}$ (N)

A, B Concentric rollers
C, D Eccentric rollers
P, P_1 = Applied forces (N)
F_r = Radial load (N)
F_a = Axial load (N)

Fig. 164

Important: the load on most loaded rollers must be, for each roller type, less or equal to the corresponding rated load on the catalogue.

S
R

Trolley on single rail horizontal

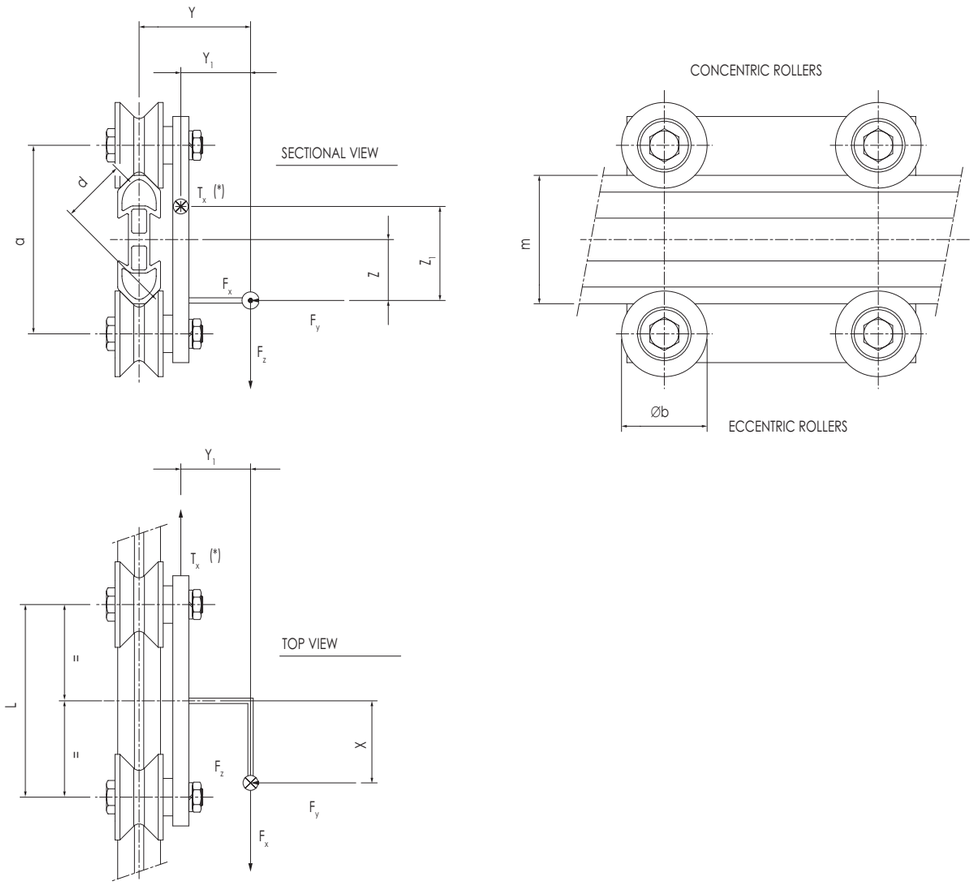

(*) Traction force (chain or belt) $T_x = F_x$

Fig. 165

The rollers with concentric sleeve are mounted where there is the highest load and the ones with eccentric sleeve on the opposite end.

All 'F' values must include the dynamic component obtained by:
Inertia force = mass (kg) x acceleration (mt/s^2).

Roller-guide load verification

$$F\ Ass \Rightarrow \frac{F_y}{4} + \frac{F_y \cdot X + F_x \cdot Y_1}{2 \cdot L} + \frac{F_z \cdot Y + F_y \cdot Z}{2 \cdot d \cdot 1.41}$$

$$F\ Rad \Rightarrow \frac{F_y}{4} + \frac{F_z \cdot X - F_x \cdot Z_1}{L} + \frac{F_z \cdot Y + F_y \cdot Z}{2 \cdot d \cdot 1.41}$$

Fig. 166

Important: the load on most loaded rollers must be, for each roller type, less or equal to the corresponding rated load on the catalogue.

Loads on twin 4 'V' rollers trolleys

Trolley on double rail horizontal

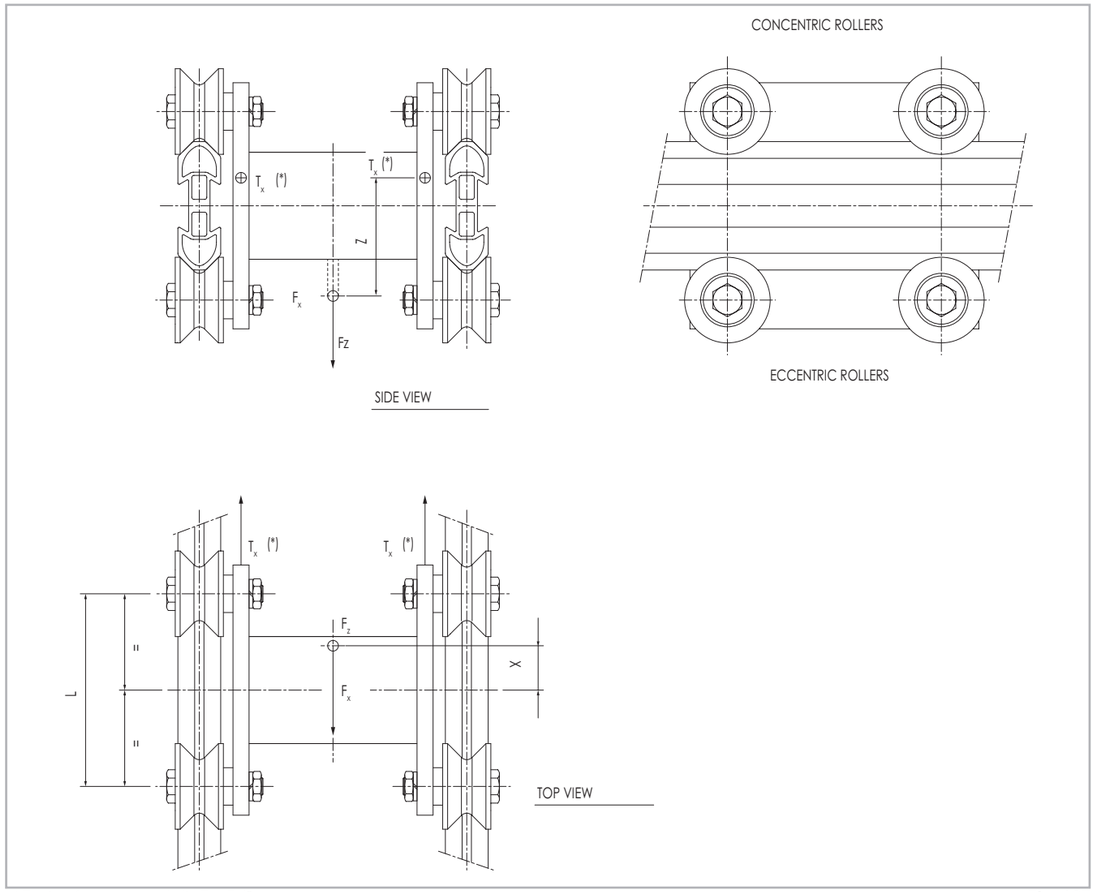

(*) Traction force (chain or belt) $T_x = F_x/2$

Fig. 167

When assembling lines with parallel rail and long strokes it would be wise to use axially-free roller assemblies on one of the rails in order to withstand minor misalignments due either to assembly or maintenance errors.

All 'F' values must include the dynamic component obtained by:
Inertia Force = mass (kg) x acceleration (mt/s^2).

Roller-guide load verification

$$F\ Rad \Rightarrow \frac{F_z}{4} + \frac{F_x \cdot Z + F_z \cdot X}{2 \cdot L}$$

Fig. 168

Important: the load on most loaded rollers must be, for each roller type, less or equal to the corresponding rated load on the catalogue.

Loads on a 4 'V' rollers vertical trolley

Trolley on single vertical rail

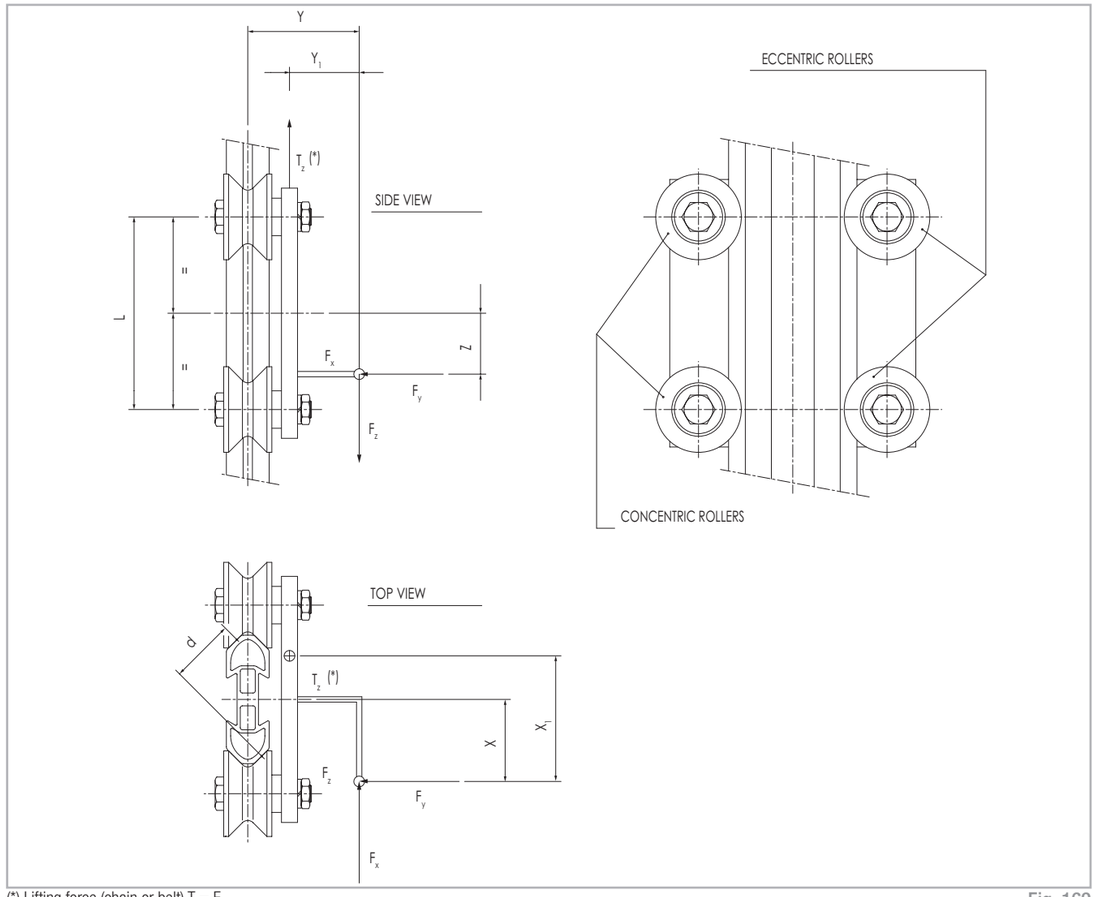

(*) Lifting force (chain or belt) $T_z = F_z$

Fig. 169

The rollers with concentric sleeve are mounted where there is the highest load and the ones with eccentric sleeve on the opposite end.

All 'F' values must include the dynamic component obtained by:
Inertia Force = mass (kg) x acceleration (mt/s^2).

Roller-guide load verification

$$F\ Ass \Rightarrow \frac{F_y}{4} + \frac{F_y \cdot Z + F_z \cdot Y_1}{2 \cdot L} + \frac{F_y \cdot X - F_x \cdot y}{2 \cdot d \cdot 1.41}$$

$$F\ Rad \Rightarrow \frac{F_z \cdot X_1 + F_x \cdot Z}{L} + \frac{F_x \cdot Y - F_y \cdot X}{2 \cdot d \cdot 1.41} + \frac{F_y}{4} + \frac{F_x}{2}$$

Fig. 170

Important: the load on most loaded rollers must be, for each roller type, less or equal to the corresponding rated load on the catalogue.

Cilindrical roller loads

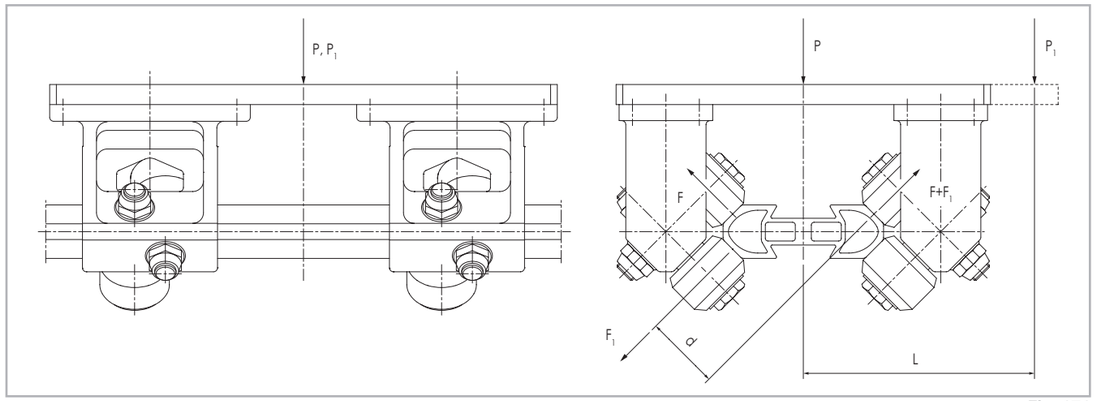

Fig. 171

Rollers load with 'P' force applied on the rail axle

$F = P \cdot (\frac{1}{2 \cdot \sqrt{2}})$ (N)	$F_1 = 0$ (N)	$F_r = F$ (N)	P, P_1 = Applied forces (N) F_r = Radial load (N)

Fig. 172

Rollers load with 'P_1' force applied at 'L' distance (mm) from rail centerline

$F = P_1 \cdot (\frac{1}{2 \cdot \sqrt{2}})$ (N)	$F_1 = \frac{P_1 \cdot L}{2 \cdot d}$ (N)	$F_r = F + F_1$ (N)	P, P_1 = Applied forces (N) F_r = Radial load (N)

Fig. 173

Important: the load on most loaded rollers must be, for each roller type, less or equal to the corresponding rated load on the catalogue.

SR

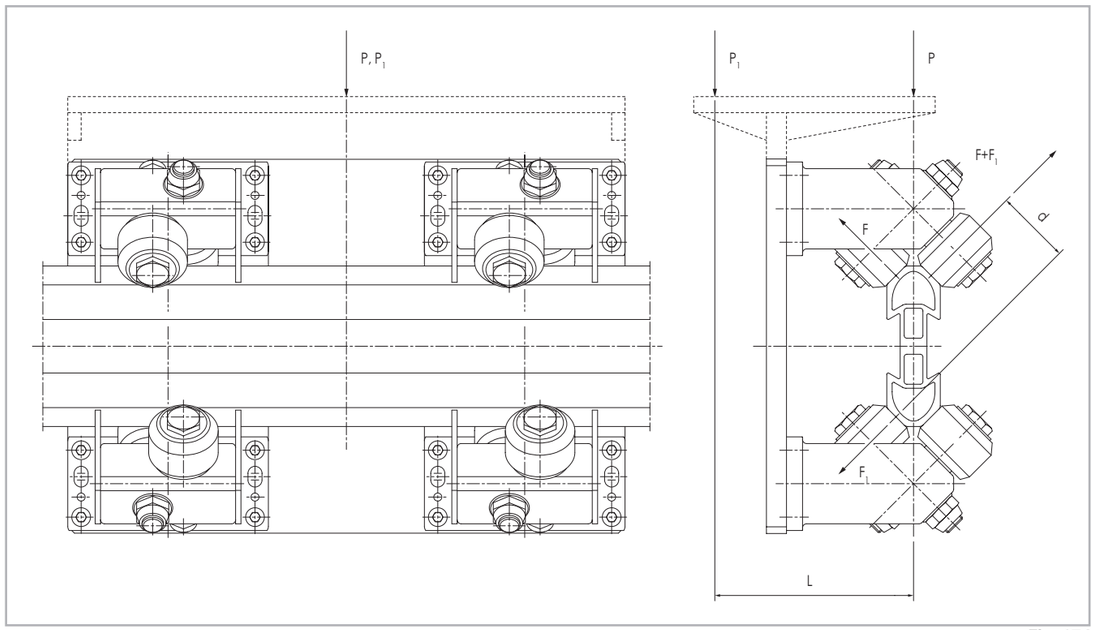

Fig. 174

Rollers load with 'P' force applied on the rail axle

$F = P \cdot (\frac{1}{2 \cdot \sqrt{2}})$ (N)	$F_1 = 0$ (N)	$F_r = F$ (N)	P, P_1 = Applied forces (N) F_r = Radial load (N)

Fig. 175

Rollers load with 'P' force applied at 'L' distance (mm) from rail centerline

$F = P \cdot (\frac{1}{2 \cdot \sqrt{2}})$ (N)	$F_1 = \frac{P \cdot L}{2 \cdot d}$ (N)	$F_r = F + F_1$ (N)	P, P_1 = Applied forces (N) F_r = Radial load (N)

Fig. 176

Important: the load on most loaded rollers must be, for each roller type, less or equal to the corresponding rated load on the catalogue.

User suggestions

When and how to use speedy rail:

When a linear transfer system requires one or more of the following features:

- Lightweight
- Quiet
- Resistant to dust and chemical agents
- Easy to assemble
- Interchangeable

How:

The **Speedy Rail®** beam moves within fixed roller assemblies.
The lightness of the beam offers power and energy cost-savings, increasing the acceleration and speed. Side arm and/or manipulators can be fitted on the moving beam.

The **Speedy Rail®** beam is static and the roller assemblies, connected to a frame, are moving. Either with a static or moving beam, the movement can be realized through several means such as rack-pivot coupling, belts, chain, pneumatic or hydraulic cylinder. For preassembled modular units will you please refer to the catalogue of Rollon modules and portals.

If the value is more than 128 daN, it will be necessary to provide either more supports or only one self-aligning roller assembly with 8 - 10 or 12 rollers, so than the "F" value, divided by the number of rollers on the specified point of application will be equal or less than 128 daN.
Compared to steel beams and roller assemblies, the **Speedy Rail®** surface treatment and plastic compound shells on the rollers allows the utilization of Rollon components in high speed and high accelerations systems. These benefits remove typical damages due to wear normally present in metal to metal sliding situations. When building a system with one single segment of **Speedy Rail®** section, it is possible to slightly pre-load the rollers.

Do not pre-load rollers on a system with a rail composed of 2 or more segments.

Calculations data:

Important calculation factors to consider:
1) Maximum beam deflection under the load action
2) Maximum roller stress

1) Elastic deflection

Usually in a transfer system the deformations derived from elastic deflection are not a disturbing element.

2) Roller stress

Considering a roller assembly with two cylindric plastic compound rollers, the maximum load on the highest stressed roller should not exceed 128 daN. With the following formula it's possible to calculate the load on the most stressed roller.

$$F = \frac{P.a}{d} + \frac{P}{\sqrt{2}}$$

Power required to drive a trolley or bar

The following calculations are true in a system without overloads generated either by misalignement or an incorrect assembly. The following sliding friction factors are approximate with excess.

Terminology and dimensional units

M [kg]	moving mass
n_r	number of moving rollers
C_r = 100 Nmm	internal max resisting torque for each roller
a [m/s^2]	moving mass acceleration
g [m/s^2]	gravity acceleration
f_{cc} = 0.05	drive resisting coefficient of plastic compound rollers
f_{vc} = 0.065	drive resisting coefficient of 'V' shaped plastic compound rollers
F [N]	drive resisting force
V [m/s]	max traverse speed
N [W]	power
d [mm]	average roller diameter

Calculations

traverse

resisting force	$F = Ma + Mgf + \frac{2 n_r C_r}{d}$	max power	$N = F\ V$

Fig. 177

vertical lift

resisting force	$F = Ma + Mg(1+f) + \frac{2 n_r C_r}{d}$	max power	$N = F\ V$

Fig. 178

Thermal expansion of profiles, simple and compound

All profiles specifications are located on pages SR-74.

Terminology and dimensional units

$K_1 = 23x10^{-6}$ 1/°C	light alloy linear thermal expansion coefficient
D_t [°C]	temperature variation in comparison with the assembling
A_1 [mm2]	light alloy profile section
L [mm]	rail length
D_1 [mm]	rail length variation

Calculations

light alloy rails

$$D_1 = K_1 \times D_t \times L$$

Applications

Rails for sliding doors

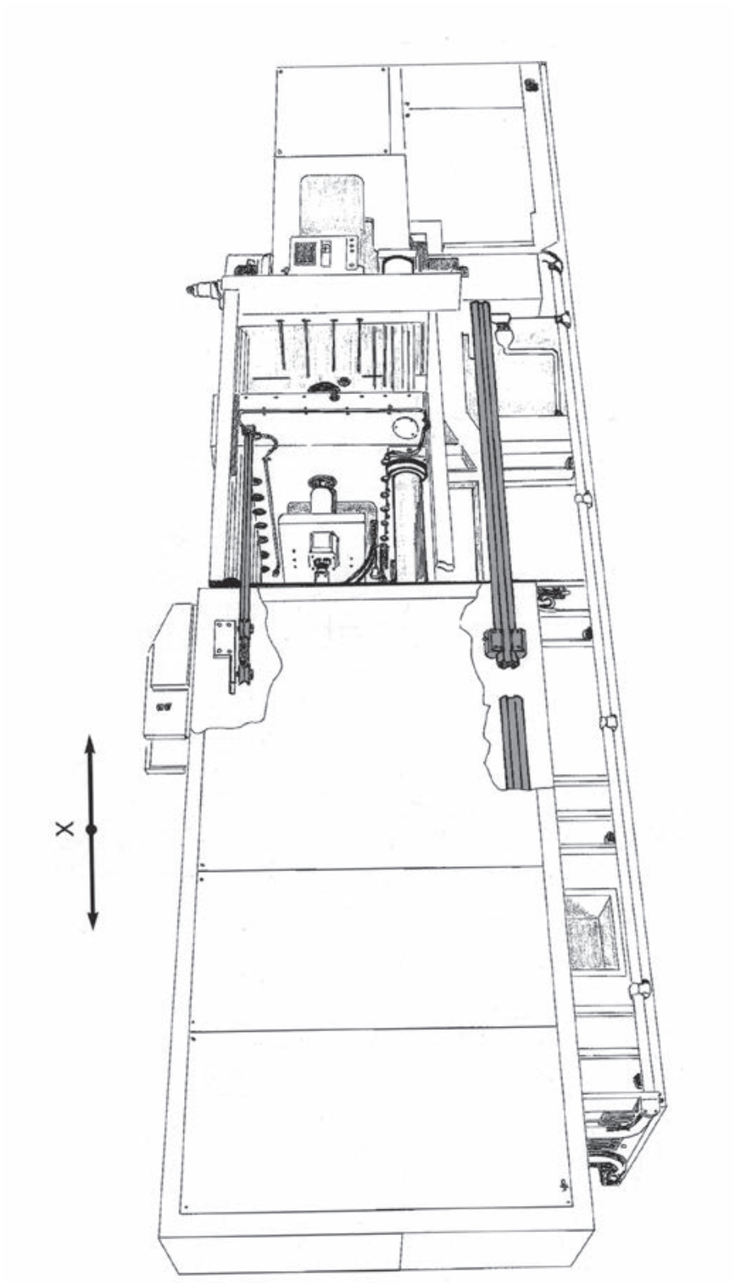

Glass sheet manipulator

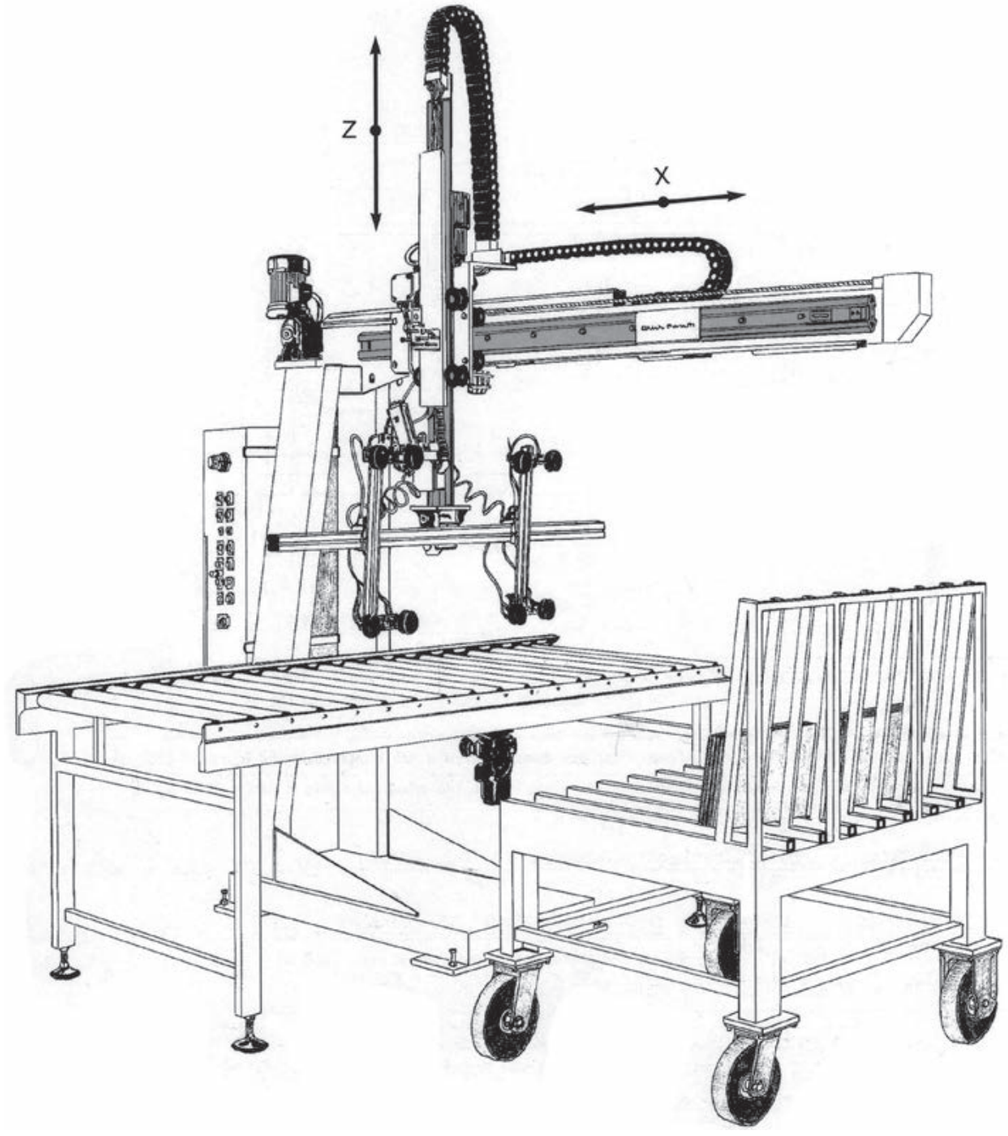

Automatic press feeder

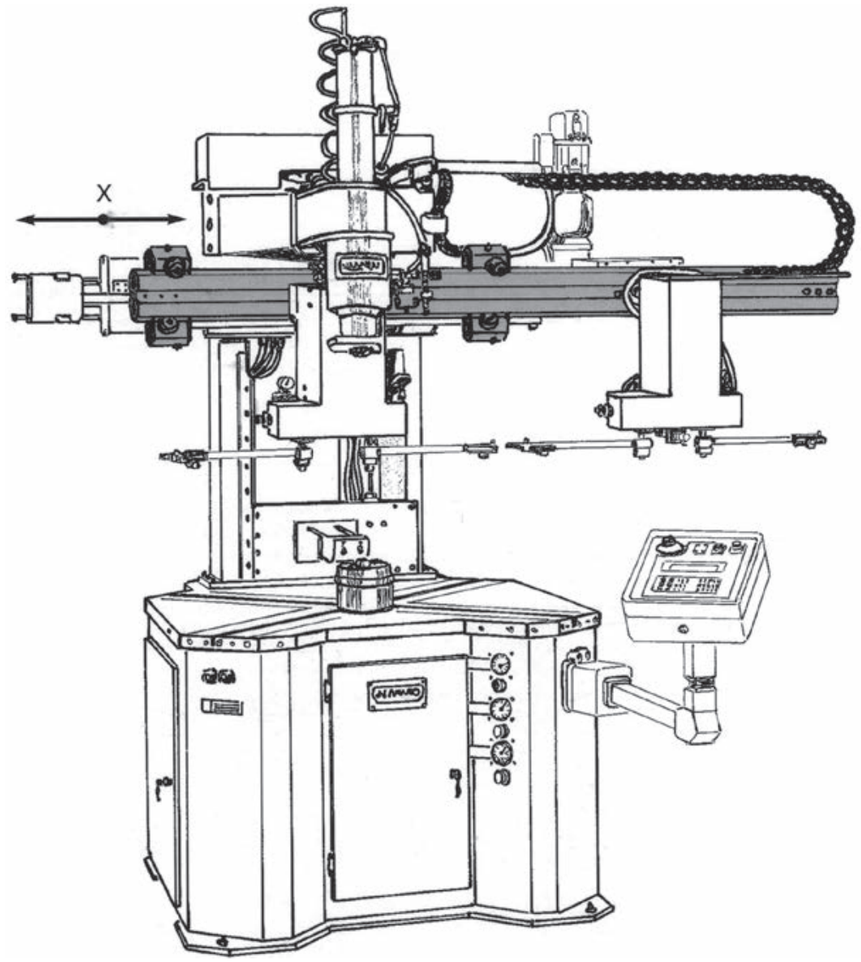

Automated oven feeder - tile production

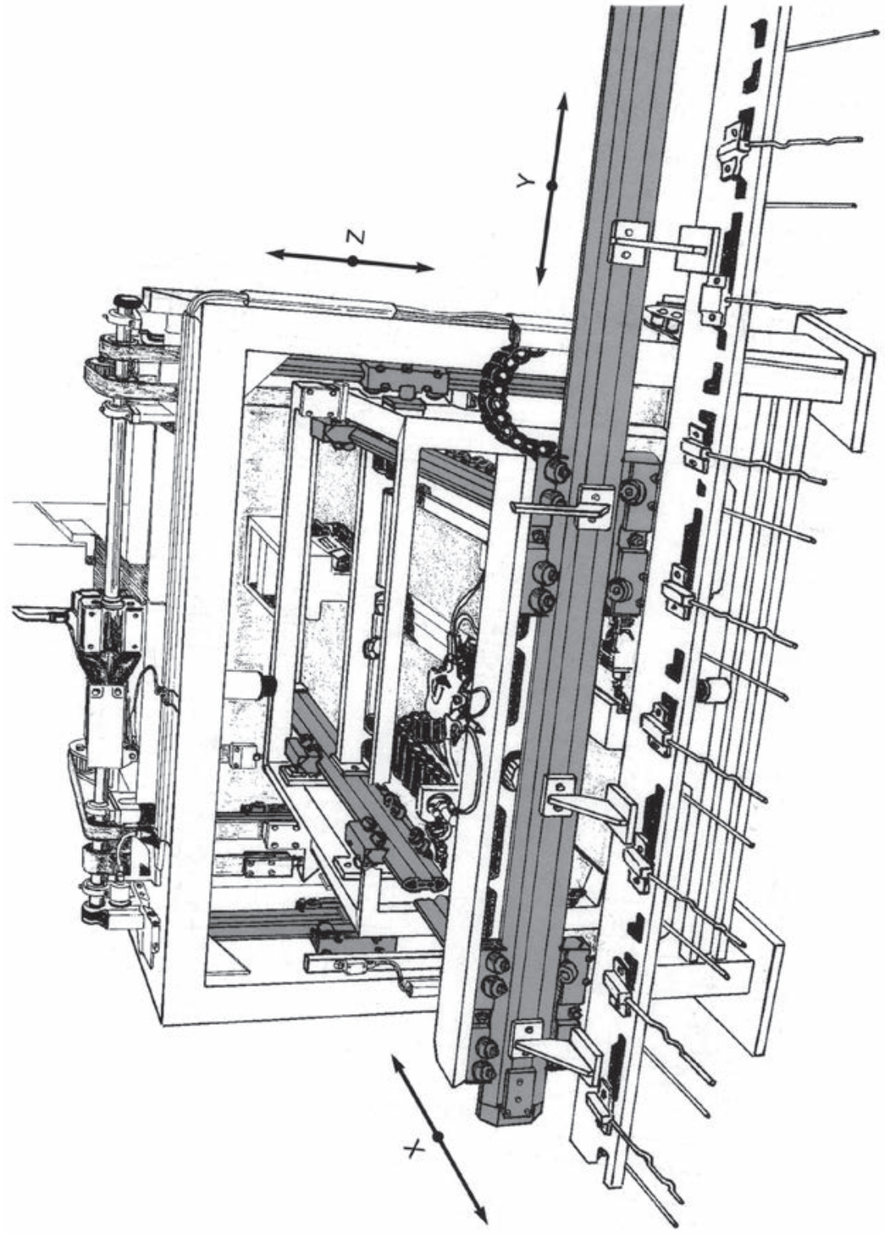

Speedy Rail SR180 and plastic compound cylindric rollers in enviroment with strong presence of impurities

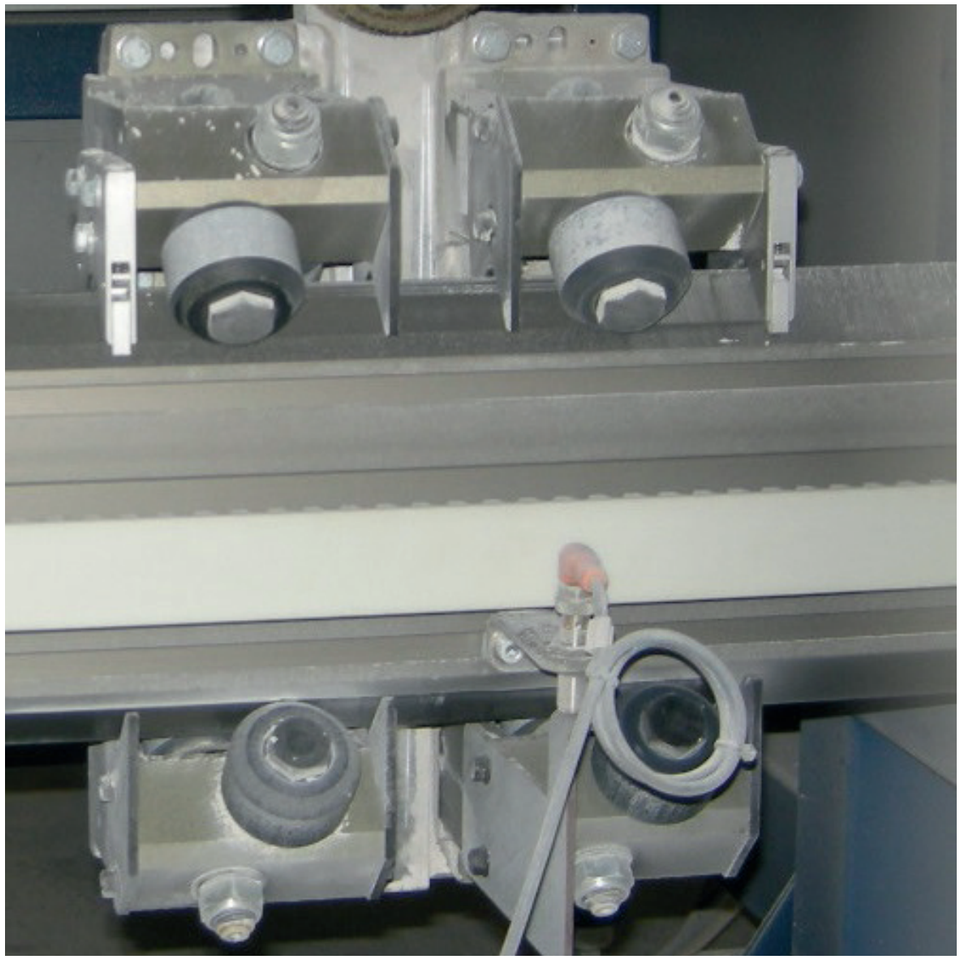

General index

Code	Pag	Description	Profile
Tables and general informations			
\\	SR-2	Introduction	\\
\\	SR-5	Conversion tables measurement units	\\
\\	SR-6	Speedy Rail 35	\\
\\	SR-10	Speedy Rail C 48	\\s
\\	SR-14	Speedy Rail Mini SR60 - exploded axonometric view	\\
\\	SR-21	Speedy Rail Middle SR90 - exploded axonometric view	\\
\\	SR-27	Speedy Rail Standard SR120 - exploded axonometric view	\\
\\	SR-54	Speedy Rail Wide Body SR180 - exploded axonometric view	\\
\\	SR-63	Speedy Rail Super Wide Body SR 250 - exploded axonometric view	\\
\\	SR-68	Technical detail	\\
\\	SR-72	Summary table Speedy Rail guides	\\
\\	SR-73	Loads calculation on 'V'-shaped rollers - general scheme	\\
\\	SR-79	Cilindrical roller loads	\\
\\	SR-81	User suggestions	\\
\\	SR-82	Calcualtion of power required to drive a trolley and/or a bar	\\
\\	SR-83	Thermal expansion of profiles	\\
\\	SR-84	Application example: Rails for sliding doors	\\
\\	SR-85	Application example: Glass sheet manipulator	\\
\\	SR-86	Application example: Automatic press feeder	\\
\\	SR-87	Application example: Automated oven feeder - tile production	\\
\\	SR-88	Speedy Rail 180 in enviroment with strong presence of impurities	\\
\\	SR-89	General index	\\
Light alloy guides			
SIMP-T	SR-8	Speedy Rail 35 guide	\\
SIMP-F	SR-8	Speedy Rail 35 guide with drilled ends	\\
CR48-T	SR-10	Speedy Rail C48 guide	\\
CR48-F/CR48-D	SR-10	Speedy Rail C 48 guide drilled	\\
SR060 - T	SR-16	'Mini Speedy Rail' SR60 guide	\\
SR060 - F	SR-16	'Mini Speedy Rail' SR60 guide with drilled ends	\\
SR090 - T	SR-23	'Middle Speedy Rail' SR90 guide	\\
SR090 - F	SR-23	Middle Speedy Rail with drilled ends	\\
SR120 - T	SR-29	"Standard Speedy Rail" SR120 guide	\\
SR120 - F	SR-29	"Standard Speedy Rail" SR120 with drilled ends	\\
SR180 - T	SR-56	Speedy Rail 'Wide Body' SR180 guide	\\
SR180 - F	SR-56	Speedy Rail 'Wide Body' SR180 guide with drilled ends	\\

Code	Pag	Description	Profile
SR250 - T	SR-65	Speedy Rail 'Super Wide Body' SR250 guide	\\
SR250 - F	SR-65	Speedy Rail 'Super Wide Body' SR250 guide with drilled ends	\\
Roller			
101.3418	SR-51	Reference roller for rack	SR120/SR18M0/SR250
ROL-C062VC-BA	SR-25	Concentric roller axially free	SR90
ROL-E062VC-BA	SR-25	Eccentric roller axially free	SR90
ROL-C032VC-B	SR-18	Light concentric 'V'-Shaped roller	SR60
ROL-E032VC-B	SR-18	Light eccentric 'V'-Shaped roller	SR60
ROL-C090VC-BH	SR-37	Heavy duty concentric 'V' roller	SR120/SR180/SR250
ROL-E090VC-BH	SR-37	Heavy duty eccentric 'V' roller	SR120/SR180/SR250
ROL-C062VC-BH	SR-25	Concentric roller heavy duty	SR90
ROL-E062VC-BR	SR-25	Ecccentric roller heavy duty	SR90
ROL-C080VC-BR	SR-34	High stiffness concentric roller	SR120
ROL-E080VC-BR	SR-34	High stiffness eccentric roller	SR120
ROL-C050VC-B	SR-19	Plastic compound concentric roller	SR60
ROL-E050VC-B	SR-19	Plastic compound eccentric roller	SR60
ROL-C080VC-BVA	SR-34	Concentric roller - axially free	SR120
ROL-E080VC-BVA	SR-34	Eccentric roller - axially free	SR120
ROL-C080VC-B	SR-34	Concentric roller	SR120
ROL-E080VC-B	SR-34	Eccentric roller	SR120
ROL-C062VC-B	SR-25	Concentric 'V'-shaped roller	SR90
ROL-E062VC-B	SR-25	Eccentric 'V'-shaped roller	SR90
ROL-C090VC-BAH	SR-37	Heavy duty concentric 'V' roller - axially free	SR120/SR180/SR250
ROL-E090VC-BAH	SR-37	Heavy duty eccentric 'V' roller - axially free	SR120
ROL-E031WC-B	SR-12	Axially constrained eccentric roller	SRC48
ROL-C031WC-X	SR-12	Axially constrained concentric roller	SRC48
ROL-C031VC-XA	SR-12	Axially free concentric roller	SRC48
ROL-E031VC-BA	SR-12	Axially free eccentric roller	SRC48
ROL-C030CC-B	SR-9	Concentric contrast roller	SR35
ROL-E030CC-B	SR-9	Eccentric contrast roller	SR35
ROL-C034VC-B	SR-8	Concentric roller	SR35
ROL-E034VC-B	SR-8	Eccentric roller	SR35
ROL-C090VC-BS	SR-38	Protected concentric 'V' roller for heavy duties	SR120/SR180/SR250
ROL-E090VC-BS	SR-38	Protected eccentric 'V' roller for heavy duties	SR120/SR180/SR250
ROL-E052CCC-BP	SR-37	Eccentric roller	SR120
ROL-C052CCC-BP	SR-37	Concentric roller	SR120/SR180/SR250
ROL-E052CCC-BV	SR-37	Eccentric roller	SR120/SR180/SR250
ROL-C052CCC-BV	SR-37	Concentric roller	SR120/SR180/SR250
ROL-C052CCL-BV	SR-36	Concentric roller	SR120/SR180/SR250
ROL-E052CCL-BV	SR-36	Eccentric roller	SR120/SR180/SR250
ROL-C052CCL-BP	SR-36	Concentric roller	SR120/SR180/SR250

Code	Pag	Description	Profile
ROL-E052CCL-BP	SR-36	Eccentric roller	SR120/SR180/SR250
ROL-C040CC-BP	SR-36	Concentric roller radial load - Periodical lubrication	SR120/SR180/SR250
ROL-C040CC-BV	SR-36	Concentric roller radial load - Lifetime lubrication	SR120/SR180/SR250
Supporti a rotelle			
55.0222	SR-43	8 Rollers blindo beam roller assembly	SR120
55.0323	SR-41	Roller assembly with backing plate 280x150	SR120
55.0324	SR-41	Roller assembly with backing plate 235.5X80	SR120
55.0325	SR-40	Light alloy body roller assembly with side holes	SR120/SR180/SR250
55.0372	SR-18	Roller assembly with 3 rollers	SR60
55.0375	SR-19	Roller assembly with 4 rollers	SR60
55.0411	SR-42	Narrow base blindo beam roller assembly	SR120
55.0433	SR-40	Light alloy body roller assembly with side mounting holes	SR120/SR180/SR250
55.0472	SR-42	Wide base blindo beam roller assembly	SR120
55.0513	SR-59	Roller assembly with backing plate 336x150	SR180
55.0514	SR-59	Roller assembly with backing plate 381.5x80	SR180
55.0557	SR-35	Light weight roller assembly with 4 rollers	SR120
55.0558	SR-35	Roller assembly with 4 high stiffness rollers	SR120
55.0604	SR-39	Compact roller assembly	SR120/SR180/SR250
55.0605	SR-19	Roller assembly with 3 rollers	SR60
55.0606	SR-20	Roller assembly with 4 rollers	SR60
55.0665	SR-26	Roller assembly with 3 rollers	SR90
55.0666	SR-26	Roller assembly with 4 rollers	SR90
55.0711	SR-42	Wide base roller assembly	SR120
55.0713	SR-59	Roller assembly with backing plate 336x150	SR180
55.0723	SR-41	Roller assembly with backing plate 280x150	SR120
55.0724	SR-41	Roller assembly with backing plate 235.5X80	SR120
55.0725	SR-40	Light alloy body roller assembly with mounting holes on short sides	SR120/SR180/SR250
55.0733	SR-40	Light alloy body roller assembly with mounting holes on long sides	SR120/SR180/SR250
55.0740	SR-59	Roller assembly with backing plate 381.5x80	SR180
55.0772	SR-42	Wide base blindo beam roller assembly	SR120
55.0794	SR-39	Compact roller assembly	SR120/SR180
55.0808	SR-67	Roller assembly with 4 V-shaped rollers	SR 250
55.1060	SR-13	Roller assembly with two concentric rollers and one excentric roller	SRC48
55.1061	SR-13	Roller assembly with one concentric and one excentric roller	SRC48
55.1062	SR-12	Roller assembly with one conc. roller	SRC48
55.1064	SR-13	Roller assembly with 4 rollers, 3 conc. and 1 ecc.	SRC48
55.1065	SR-12	Roller assembly with one ecc. axial free roller	SRC48
55.1066	SR-12	Roller assembly with one conc. axial free roller	SRC48
55.1067	SR-12	Roller assembly with one ecc. roller	SRC48
55.1143	SR-49	Floating roller assembly with 8 rollers - short pivot ecc. - periodical lubrication	SR120/SR180/SR250
55.1144	SR-49	Floating roller assembly with 8 rollers - short pivot conc. - periodical lubrication	SR120/SR180/SR250

Code	Pag	Description	Profile
55.1145	SR-49	Floating roller assembly with 8 rollers - short pivot ecc. - lifetime lubrication	SR120/SR180/SR250
55.1146	SR-49	Floating roller assembly with 8 rollers - short pivot conc. - lifetime lubrication	SR120/SR180/SR250
55.1147	SR-49	Floating roller assembly with 8 rollers - long pivot ecc. - periodical lubrication	SR120/SR180/SR250
55.1148	SR-49	Floating roller assembly with 8 rollers - long pivot conc. - periodical lubrication	SR120/SR180/SR250
55.1149	SR-49	Floating roller assembly with 8 rollers - long pivot ecc. - lifetime lubrication	SR120/SR180/SR250
55.1150	SR-49	Floating roller assembly with 8 rollers - long pivot conc. - lifetime lubrication	SR120/SR180/SR250
55.1180	SR-58	Heavy duty roller assembly with 4 rollers	SR180
55.1350	SR-45	Floating roller assembly with 4 rollers - long pivot ecc.	SR120/SR180/SR250
55.1351	SR-45	Floating roller assembly with 4 rollers - long pivot conc.	SR120/SR180/SR250
55.1354	SR-45	Floating roller assembly with 4 rollers - short pivot ecc.	SR120/SR180/SR250
55.1355	SR-45	Floating roller assembly with 4 rollers - short pivot conc.	SR120/SR180/SR250
55.1358	SR-45	Floating roller assembly with 4 rollers - short pivot ecc. with axially free	SR120/SR180/SR250
55.1359	SR-45	Floating roller assembly with 4 rollers - short pivot conc. with axially free	SR120/SR180/SR250
55.1361	SR-45	Floating roller assembly with 4 rollers - short pivot ecc.	SR120/SR180/SR250
55.1363	SR-45	Floating roller assembly with 4 rollers - long pivot ecc.	SR120/SR180/SR250
55.1364	SR-45	Floating roller assembly with 4 rollers - short pivot conc.	SR120/SR180/SR250
55.1365	SR-45	Floating roller assembly with 4 rollers - long pivot conc.	SR120/SR180/SR250
55.1366	SR-48	Floating roller assembly with 6 rollers - short pivot ecc.	SR120/SR180/SR250
55.1367	SR-48	Floating roller assembly with 6 rollers - short pivot ecc.	SR120/SR180/SR250
55.1368	SR-48	Floating roller assembly with 6 rollers - long pivot ecc.	SR120/SR180/SR250
55.1369	SR-48	Floating roller assembly with 6 rollers - long pivot ecc.	SR120/SR180/SR250
55.1370	SR-48	Floating roller assembly with 6 rollers - short pivot conc.	SR120/SR180/SR250
55.1371	SR-48	Floating roller assembly with 6 rollers - short pivot conc.	SR120/SR180/SR250
55.1372	SR-48	Floating roller assembly with 6 rollers - long pivot conc.	SR120/SR180/SR250
55.1373	SR-48	Floating roller assembly with 6 rollers - long pivot conc.	SR120/SR180/SR250
55.1380	SR-60	Complete pairing floating assembly - short pivot	SR180
55.1381	SR-60	Complete pairing floating assembly - short pivot	SR180
55.1382	SR-60	Complete pairing floating assembly - long pivot	SR180
55.1383	SR-60	Complete pairing floating assembly - long pivot	SR180
55.1419	SR-47	Floating roller assembly with 6 rollers - long pivot ecc.	SR120/SR180/SR250
55.1420	SR-47	Floating roller assembly with 6 rollers - long pivot conc.	SR120/SR180/SR250
55.1421	SR-47	Floating roller assembly with 6 rollers - long pivot ecc.	SR120/SR180/SR250
55.1422	SR-47	Floating roller assembly with 6 rollers - long pivot conc.	SR120/SR180/SR250
55.1423	SR-47	Floating roller assembly with 6 rollers - short pivot ecc.	SR120/SR180/SR250
55.1424	SR-47	Floating roller assembly with 6 rollers - short pivot conc.	SR120/SR180/SR250
55.1425	SR-47	Floating roller assembly with 6 rollers - short pivot ecc.	SR120/SR180/SR250
55.1426	SR-47	Floating roller assembly with 6 rollers - short pivot conc.	SR120/SR180/SR250
55.1550	SR-38	2 Rollers light full-block assembly	SR120/SR180/SR250
55.1555	SR-44	Floating roller assembly with 4 rollers ecc.	SR120/SR180/SR250
55.1556	SR-44	Floating roller assembly with 4 rollers conc.	SR120/SR180/SR250
55.1565	SR-44	Floating roller assembly with 4 rollers ecc.	SR120/SR180/SR250
55.1566	SR-44	Floating roller assembly with 4 rollers conc.	SR120/SR180/SR250

Code	Pag	Description	Profile
55.1570	SR-38	Light alloy rollers assembly with 2 rollers - Lifetime lubricated.	SR120/SR180/SR250
55.3143	SR-49	Floating roller assembly with 8 rollers - short pivot ecc. - periodical lub. axially free	SR120/SR180/SR250
55.3144	SR-49	Floating roller assembly with 8 rollers - short pivot conc. - periodical lub. axially free	SR120/SR180/SR250
55.3145	SR-49	Floating roller assembly with 8 rollers - short pivot ecc. - lifetime lub. axially free	SR120/SR180/SR250
55.3146	SR-49	Floating roller assembly with 8 rollers - short pivot conc. - lifetime lub. axially free	SR120/SR180/SR250
55.3147	SR-49	Floating roller assembly with 8 rollers - long pivot ecc. - periodical lub. axially free	SR120/SR180/SR250
55.3148	SR-49	Floating roller assembly with 8 rollers - long pivot conc. - periodical lub. axially free	SR120/SR180/SR250
55.3149	SR-49	Floating roller assembly with 8 rollers - long pivot ecc. - lifetime lub. axially free	SR120/SR180/SR250
55.3150	SR-49	Floating roller assembly with 8 rollers - long pivot conc. - lifetime lub. axially free	SR120/SR180/SR250
55.3350	SR-45	Floating roller assembly with 4 rollers - long pivot ecc. with axially free	SR120/SR180/SR250
55.3351	SR-45	Floating roller assembly with 4 rollers - long pivot conc. with axially free	SR120/SR180/SR250
55.3361	SR-45	Floating roller assembly with 4 rollers - short pivot ecc. with axially free	SR120/SR180/SR250
55.3363	SR-45	Floating roller assembly with 4 rollers - long pivot ecc. with axially free	SR120/SR180/SR250
55.3364	SR-45	Floating roller assembly with 4 rollers - short pivot conc. with axially free	SR120/SR180/SR250
55.3365	SR-45	Floating roller assembly with 4 rollers - long pivot conc. with axially free	SR120/SR180/SR250
55.3366	SR-48	Floating roller assembly with 6 rollers - short pivot ecc. with axially free	SR120/SR180/SR250
55.3367	SR-48	Floating roller assembly with 6 rollers - short pivot ecc. with axially free	SR120/SR180/SR250
55.3368	SR-48	Floating roller assembly with 6 rollers - long pivot ecc. with axially free	SR120/SR180/SR250
55.3369	SR-48	Floating roller assembly with 6 rollers - long pivot ecc. with axially free	SR120/SR180/SR250
55.3370	SR-48	Floating roller assembly with 6 rollers - short pivot conc. with axially free	SR120/SR180/SR250
55.3371	SR-48	Floating roller assembly with 6 rollers - short pivot conc. with axially free	SR120/SR180/SR250
55.3372	SR-48	Floating roller assembly with 6 rollers - long pivot conc. with axially free	SR120/SR180/SR250
55.3373	SR-48	Floating roller assembly with 6 rollers - long pivot conc. with axially free	SR120/SR180/SR250
55.3419	SR-47	Floating roller assembly with 6 rollers - long pivot ecc. with axially free	SR120/SR180/SR250
55.3420	SR-47	Floating roller assembly with 6 rollers - long pivot conc. with axially free	SR120/SR180/SR250
55.3421	SR-47	Floating roller assembly with 6 rollers - long pivot ecc. with axially free	SR120/SR180/SR250
55.3422	SR-47	Floating roller assembly with 6 rollers - long pivot conc. with axially free	SR120/SR180/SR250
55.3423	SR-47	Floating roller assembly with 6 rollers - short pivot ecc. with axially free	SR120/SR180/SR250
55.3424	SR-47	Floating roller assembly with 6 rollers - short pivot conc. with axially free	SR120/SR180/SR250
55.3425	SR-47	Floating roller assembly with 6 rollers - short pivot ecc. with axially free	SR120/SR180/SR250
55.3426	SR-47	Floating roller assembly with 6 rollers - short pivot conc. with axially free	SR120/SR180/SR250
55.3553	SR-44	Floating roller assembly with 4 rollers ecc. with axially free	SR120/SR180/SR250
55.3554	SR-44	Floating roller assembly with 4 rollers conc. with axially free	SR120/SR180/SR250
55.3563	SR-44	Floating roller assembly with 4 rollers ecc. with axially free	SR120/SR180/SR250
55.3564	SR-44	Floating roller assembly with 4 rollers conc. with axially free	SR120/SR180/SR250

Dovetails and inserts			
411.0462	SR-17	Steel dovetail 2 holes M6 L=50 mm	SR60
411.0469	SR-31	Steel dovetail 2 holes M12 L=100 mm	SR120/SR180/SR250
411.0470	SR-31	Steel dovetail 6 holes M12 L=300 mm	SR120/SR180/SR250
411.0472	SR-31	Steel dovetail 2 holes M12 L=200 mm	SR120/SR180/SR250
411.0503	SR-31	Steel dovetail 2 holes M12 L=70 mm	SR120/SR180/SR250

Code	Pag	Description	Profile
411.0588	SR-31	Steel dovetail 3 holes M12 L=150 mm	SR120/SR180/SR250
411.0675	SR-31	Steel dovetail 2 holes M8 L=50 mm	SR120/SR180/SR250
411.0732	SR-17	Steel dovetail 1 hole M6 L=20 mm	SR60
411.0745	SR-31	Steel dovetail 1 hole M12 L=50 mm	SR120/SR180/SR250
411.0754	SR-17	Steel dovetail 3 holes M6 L=80 mm	SR60
411.0768	SR-17	Steel dovetail 2 holes M6 L=60 mm	SR60
411.0769	SR-17	Steel dovetail 6 holes M6 L=200 mm	SR60
411.0771	SR-17	Steel dovetail 2 holes M6 L=150 mm	SR60
411.0845	SR-31	Steel dovetail quick front insertion 1 hole M12 L=50 mm	SR120/SR180/SR250
411.0855	SR-24	Steel dovetail quick front insertion 1 hole M8 L=29 mm	SR90
411.0888	SR-32	Steel dovetail without step 3 holes M12 L=150 mm	SR120/SR180/SR250
411.0970	SR-31	Steel dovetail 6 holes M12 L=300 mm	SR120/SR180/SR250
411.1025	SR-24	Steel dovetail 1 hole M4 L=50mm	SR90
411.1045	SR-24	Steel dovetail 1 hole M8 L=50 mm	SR90
411.1047	SR-24	Steel dovetail 1 hole M6 L=50 mm	SR90
411.1046	SR-24	Steel dovetail without step 3 holes M8 L=50 mm	SR90
411.1069	SR-24	Steel dovetail 2 holes M8 L=100 mm	SR90
411.1070	SR-24	Steel dovetail 6 holes M8 L=300 mm	SR90
411.1072	SR-24	Steel dovetail 4 holes M8 L=200 mm	SR90
411.1088	SR-24	Steel dovetail 3 holes M8 L=150 mm	SR90
411.1111	SR-31	Steel dovetail 1 hole M8 L=50 mm	SR120/SR180/SR250
411.1112	SR-31	Steel dovetail 2 holes M8 L=100 mm	SR120/SR180/SR250
411.1113	SR-31	Steel dovetail 3 holes M8 L=150 mm	SR120/SR180/SR250
411.1117	SR-31	Steel dovetail 1 hole M10 L=50 mm	SR120/SR180/SR250
411.1119	SR-31	Steel dovetail 2 holes M10 L=100 mm	SR120/SR180/SR250
411.1120	SR-31	Steel dovetail 3 holes M10 L=150 mm	SR120/SR180/SR250
411.1174	SR-32	Steel dovetail quick front insertion without step 1 hole M8 L=50 mm	SR120/SR180/SR250
411.1178	SR-31	Steel dovetail quick front insertion 1 hole M10 L=50 mm	SR120/SR180/SR250
411.1185	SR-32	Steel dovetail without step 1 hole M12 L=50 mm	SR120/SR180/SR250
411.1186	SR-32	Steel dovetail without step 1 hole M10 L=50 mm	SR120/SR180/SR250
411.1349	SR-56	Zinc plated steel insert 1 hole M4 L=16 mm, with spring loaded ball	SR180/SR250
411.1351	SR-56	Zinc plated steel insert 1 hole M5 L=16 mm, with spring loaded ball	SR180/SR250
411.1352	SR-56	Zinc plated steel insert 1 hole M6 L=16 mm, with spring loaded ball	SR180/SR250
411.1353	SR-56	Zinc plated steel insert 1 hole M8 L=16 mm, with spring loaded ball	SR180/SR250
411.1675	SR-32	Steel dovetail without step 2 holes M8 L=50 mm	SR120/SR180/SR250
411.1732	SR-17	Steel dovetail 1 hole M4 L=20 mm	SR60
411.2533	SR-56	9 holes steel insert M5 L=496 mm	SR180/SR250
411.2534	SR-56	9 holes steel insert M4 L=496 mm	SR180/SR250
411.2732	SR-17	Steel dovetail 1 hole M5 L=20 mm	SR60
411.2733	SR-17	Steel dovetail 9 holes M5 L=496 mm	SR60
411.3532	SR-17	Steel dovetail 1 hole M8 L=20 mm	SR60
411.3633	SR-56	9 holes steel insert M6 L=496 mm	SR180/SR250

Fishplates			
411.0567	SR-33	Fishplate for drive head L=130 mm	SR120/SR180/SR250
411.0570	SR-33	Fishplate for side-arm attachment L=200 mm	SR120/SR180/SR250
411.0572	SR-33	Fishplate for end to end joining L=300 mm	SR120/SR180/SR250
411.0573	SR-33	Fishplate for end to end joining L=300 mm countersuk holes	SR120/SR180/SR250
411.0582	SR-58	Fishplate for roller assembly 55.1180	SR180
411.0463	SR-17	Light alloy fishplate	SR60
411.0690	SR-33	Steel fishplate for end to end joining L=300 mm	SR120/SR180/SR250
411.0735	SR-35	Fishplate for roller assemblies 55.0557 / 55.0558	SR120
411.0749	SR-19	Fishplate for roller assemblies 55.0605	SR60
411.0750	SR-20	Fishplate for roller assemblies 55.0606	SR60
411.0767	SR-16	Fishplate for drive head L=80 mm	SR60
411.0770	SR-18	Fishplate for side-arm attachment L=150 mm	SR60
411.0772	SR-17	Fishplate for drive head L=200 mm	SR60
411.0824	SR-26	Fishplate for roller assemblies 55.0665	SR90
411.0825	SR-26	Fishplate for roller assemblies 55.0666	SR90
411.0866	SR-23	Fishplate for drive head L=130 mm	SR90
411.0872	SR-24	Fishplates for end to end joining L=300 mm	SR90
411.0913	SR-18	Fishplate for roller assemblies 55.0372	SR60
411.0914	SR-19	Fishplate for roller assemblies 55.0375	SR60
411.0958	SR-67	Light alloy fishplate for roller assemblies 55.0788, 55.0808	SR250
411.0960	SR-65	Steel fishplates for end to end joining L=300mm	SR250
411.1124	SR-24	Fishplate for side-arm attachment L=150 mm	SR90
411.1041	SR-18	Plate for m^2 rack mounting	SR60
411.1155	SR-32	Fishplate for mod.3-4 rack mounting	SR120/SR180/SR250
411.1179	SR-61	Fishplate for mod.2 Rack mounting	SR180/SR250
411.1226	SR-24	Steel plate for m^2 rack mounting m^2	SR90

Cremagliere			
4111489	SR-52	Rack m2 Q10 L=998,82 straight toothed	\\
4111491	SR-52	Rack m2 Q10 L=2004,14 straight toothed	\\
4111499	SR-52	Rack m3 Q10 L=998,82 straight toothed	\\
4111501	SR-52	Rack m3 Q10 L=1997,84 straight toothed	\\
4111509	SR-52	Rack m4 Q10 L=1005,10 straight toothed	\\
4111511	SR-52	Rack m4 Q10 L=2010,42 straight toothed	\\

Componentistica			
411.0476	SR-30	Drive head	SR120
411.0610	SR-23	Bolt for drive head mount TE M6x55	SR90
411.0617	SR-30	Bolt for drive head mount TE M8x70	SR120
411.0685	SR-53	Scraper for floating and full-block assemblies	SR120/SR180/SR250
411.0686	SR-53	Scraper for compact	SR120/SR180/SR250
411.0696	SR-57	Drive head	SR180

Code	Pag	Description	Profile
411.0739	SR-16	Drive head	SR60
411.0740	SR-30	Plastic end cap	SR120
411.0744	SR-57	Bolt for drive head TE M8x90	SR180
411.0775	SR-16	M6 allen round head screw	SR60
411.0776	SR-16	Drive head	SR60
411.0818	SR-17	Bolt for drive head mount TE M5x40	SR60
411.0832	SR-61	Fishplate for drive head	SR180
411.0856	SR-23	Drive head	SR90
411.0858	SR-23	End cap	SR90
411.0896	SR-62	Steel bracket for single floating roller	SR180
411.0957	SR-66	Spacer for roller assembly with 'V'-shaped rollers	SR 250
411.0997	SR-66	Spacer for roller assembly with 'V'-shaped rollers	SR 250
411.1015	SR-66	Drive head	SR 250
411.1261	SR-46	5 rollers assembly supports	SR120/SR180/SR250
411.1963	SR-66	End cap	SR 250
411.1964	SR-57	End cap	SR180
411.1740	SR-30	Alluminium alloy end cap	SR120
55047202	SR-53	Scraper for blindo beam roller assemblies	SR120
55.1000	SR-53	Sliding brush for speedy rail and steel rail	SR120SR180/SR250

Notes

Guides suitable for all applications

Railway

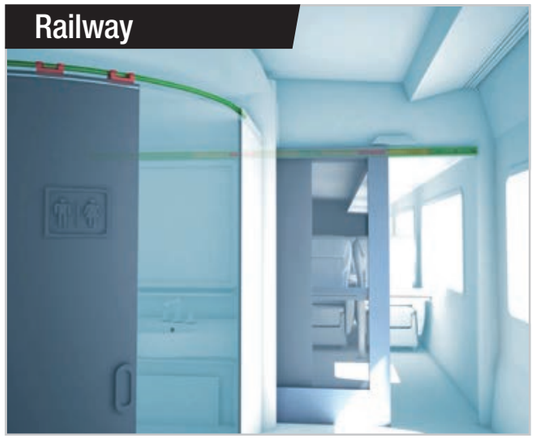

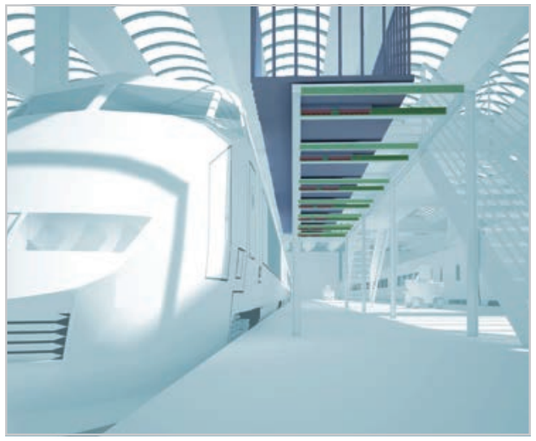

Aerospace



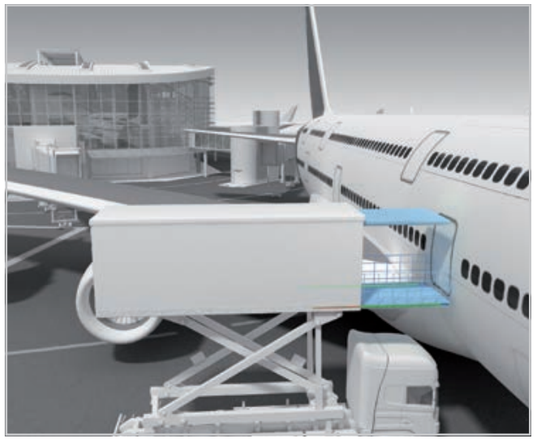

Medical

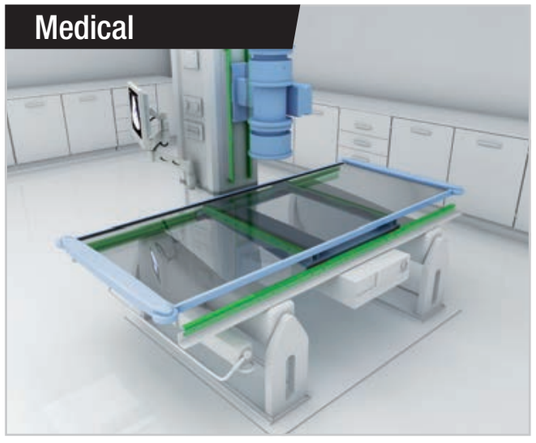

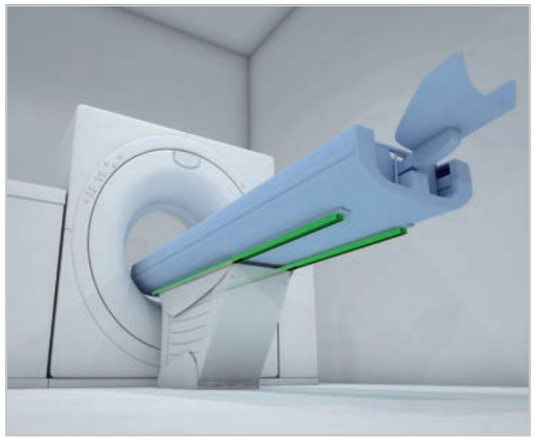

Special Vehicles



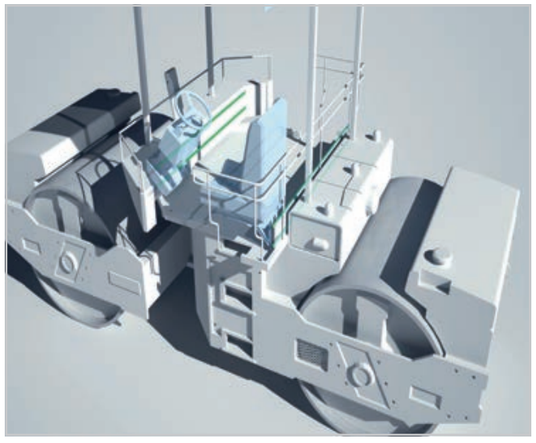

Logistics

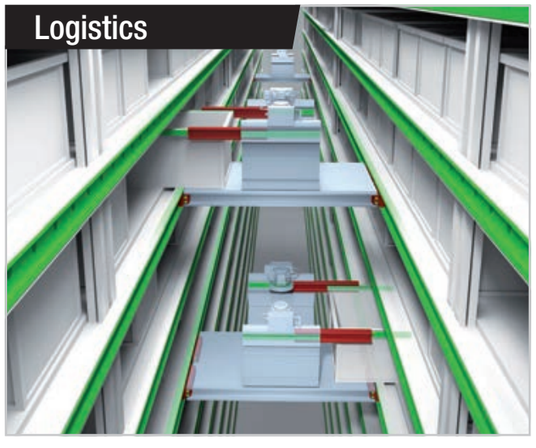

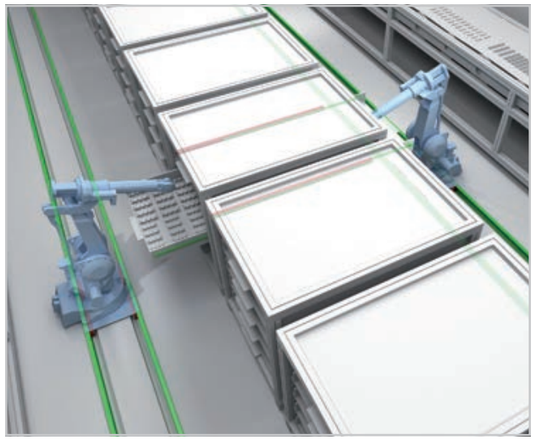

Industrial

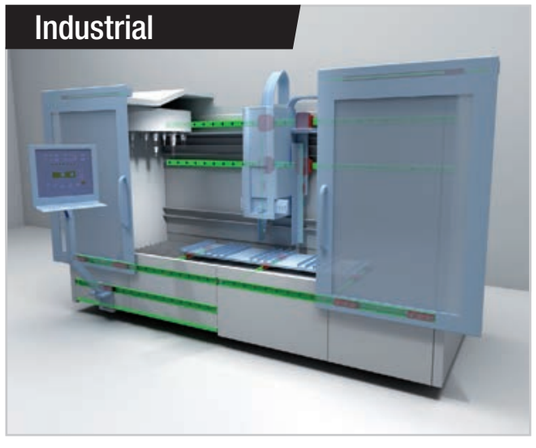

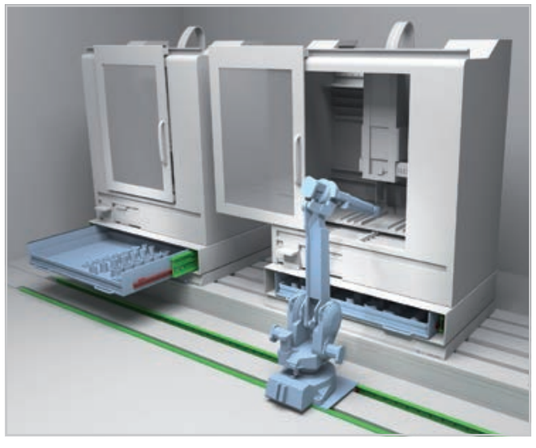

Data sheet

REQUEST FOR TECHNICAL CONSULTING

Rollon S.p.A. - Sede legale e operativa / Via Trieste 26, 20871 Vimercate (MB)

General data: **Date:** ..... **Inquiry N°:** .....

Address: ..... **Contact:** .....

Company: ..... **Cap:** .....

PHONE: ..... **Fax:** .....

Business field: .....

System in use: .....

Working enviroment: ..... ❑ Dusty ❑ Higth temperature

❑ Chemicals ❑ Other

Positioning precision: .....

Working cycle: .....

Life expectancy: .....

Drive: ❑ Motor..... ❑ Asinchronous ❑ Brushless

❑ Actuator ❑ Pneumatic ❑ Hydraulic ❑ Other

	Axis X	Axis Y	Axis Z
Load	_____N	_____N	_____N
Load position	_____mm	_____mm	_____mm
Stroke	_____mm	_____mm	_____mm
Speed	_____m/s	_____m/s	_____m/s
Max. Acceleration	_____m/s^2	_____m/s^2	_____m/s^2
Deceleration	_____m/s^2	_____m/s^2	_____m/s^2

Please enclose general drawing for application and specify loads with the position during working cycle, the above informations will allow is to provide the support request

ROLLON®
BY TIMKEN



EUROPE

ROLLON S.p.A. - ITALY (Headquarters)

Via Trieste 26
I-20871 Vimercate (MB)
Phone: (+39) 039 62 59 1
www.rollon.it - infocom@rollon.it

ROLLON GmbH - GERMANY

Bonner Strasse 317-319
D-40589 Düsseldorf
Phone: (+49) 211 95 747 0
www.rollon.de - info@rollon.de

ROLLON S.A.R.L. - FRANCE

Les Jardins d'Eole, 2 allée des Séquoias
F-69760 Limonest
Phone: (+33) (0) 4 74 71 93 30
www.rollon.fr - infocom@rollon.fr

ROLLON B.V. - NETHERLANDS

Ringbaan Zuid 8
6905 DB Zevenaar
Phone: (+31) 316 581 999
www.rollon.nl - info@rollon.nl

ROLLON S.p.A. - RUSSIA (Rep. Office)

117105, Moscow, Varshavskoye
shosse 17, building 1
Phone: +7 (495) 508-10-70
www.rollon.ru - info@rollon.ru

ROLLON Ltd - UK (Rep. Office)

The Works 6 West Street Olney
Buckinghamshire, United Kingdom, MK46 5 HR
Phone: +44 (0) 1234964024
www.rollon.uk.com - info@rollon.uk.com

AMERICA

ROLLON Corporation - USA

101 Bilby Road. Suite B
Hackettstown, NJ 07840
Phone: (+1) 973 300 5492
www.rolloncorp.com - info@rolloncorp.com

ROLLON - SOUTH AMERICA (Rep. Office)

R. Joaquim Floriano, 397, 2o. andar
Itaim Bibi - 04534-011, São Paulo, BRASIL
Phone: +55 (11) 3198 3645
www.rollonbrasil.com.br - info@rollonbrasil.com

ASIA

ROLLON Ltd - CHINA

No. 1155 Pang Jin Road,
China, Suzhou, 215200
Phone: +86 0512 6392 1625
www.rollon.cn.com - info@rollon.cn.com

ROLLON India Pvt. Ltd. - INDIA

1st floor, Regus Gem Business Centre, 26/1
Hosur Road, Bommanahalli, Bangalore 560068
Phone: (+91) 80 67027066
www.rollonindia.in - info@rollonindia.in

ROLLON - JAPAN

3F Shiodome Building, 1-2-20 Kaigan, Minato-ku,
Tokyo 105-0022 Japan
Phone +81 3 6721 8487
www.rollon.jp - info@rollon.jp

Consult the other ranges of products



Distributor

All addresses of our global sales partners can also be found at www.rollon.com

The content of this document and its use are subject to the general terms of sale of ROLLON available on the web site www.rollon.com
Changes and errors expected. The text and images may be used only with our permission.