www.thk.ru тел. +7(499) 703-39-86 thk-mail@ya.ru

THK
The Mark of Linear Motion

LM Guide Actuator KR

- LM Guide and Ball Screw in One Compact Unit
- Meeting All Requirements for Rigidity and Precision
- Broad Range of Sizes Available



THK CO., LTD.
TOKYO, JAPAN

Catalogue No. 209-5EU

THK LM Guide Actuator KR

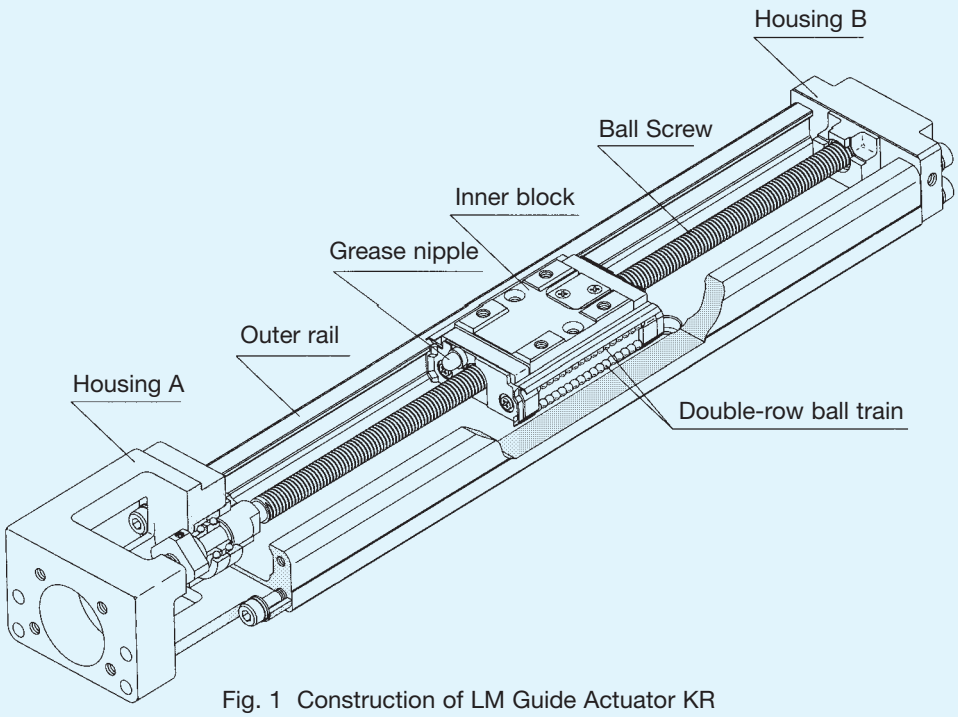

Fig. 1 Construction of LM Guide Actuator KR

Construction and Features

The one-piece structure of the LM Guide, with a U-shaped outer rail and the ball screw in the center of the inner block, provides high rigidity and excellent accuracy and requires minimal installation space to combine rigid and precise functioning with a minimum size.

Ball races are arranged at a contact angle of 45° in relation to one another so that each race of balls bears an equal load rating on the inner block in all four directions: radial, reverse-radial, and the two lateral directions. Thus, this type can be used in any installation direction.

Four-way Equal Load

Load-bearing ball races are arranged with two on each side, thus constituting a double-row angular-contact design. As this design can bear an equal rated load in all four directions (upward and downward, right and left), the mounting direction of the unit is not limited. The LM Guide Actuator is therefore suited for applications where the loading direction is not fixed, as in the motion of a Cartesian coordinate robot arm etc.

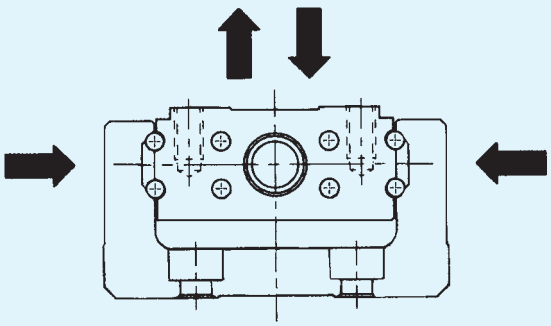

Fig. 2 Load-Bearing Capacity of Type KR

High Rigidity

Unlike conventional LM Guide models, the LM Guide Actuator has adopted an outer-rail structure, which provides far greater rigidity against overhung loads.

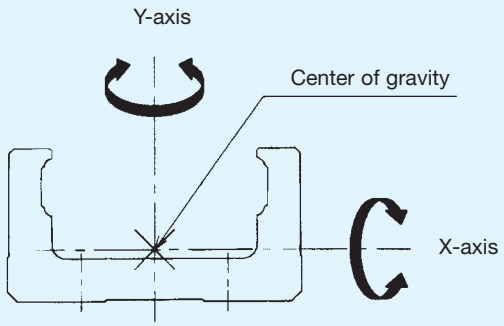

Fig. 3

The U-shaped cross section of the rail contributes to weight reduction and minimises deflection. Thus, the LM Guide Actuator can support a load on one side as well as on both.

Table 1

Model No.	I_x [mm⁴] 1)	I_y [mm⁴] 2)	Mass m [kg/100mm]
KR15	9.08×10^2	1.42×10^4	0.104
KR20	6.1×10^3	6.2×10^4	0.26
KR26	1.7×10^4	1.5×10^5	0.39
KR30H	2.7×10^4	2.8×10^5	0.50
KR33	6.2×10^4	3.8×10^5	0.66
KR45H	8.4×10^4	8.9×10^5	0.90
KR46	2.4×10^5	1.5×10^6	1.26
KR55	2.2×10^5	2.3×10^6	1.50
KR65	4.6×10^5	5.9×10^6	2.31

1) I_x = Geometrical moment of inertia of the cross section around the X-axis (mm⁴)
2) I_y = Geometrical moment of inertia of the cross section around the Y-axis (mm⁴)

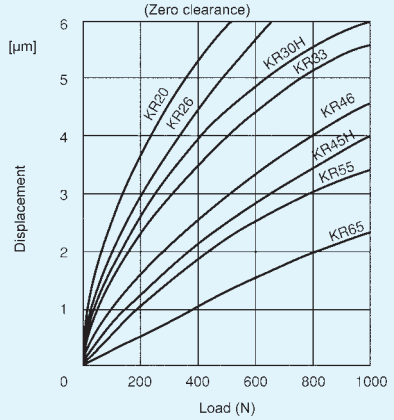

Fig. 4 Displacement of KR Due to Radial Load

High Accuracy

The four raceways for loaded balls, which are formed into a circular-arc groove, allow balls to roll smoothly even under a preload. Preloading eliminates clearances, provides high rigidity for the guideway, and minimises fluctuations in frictional resistance due to a fluctuating load. As a result, a high feeding accuracy in sub-microns can be obtained.

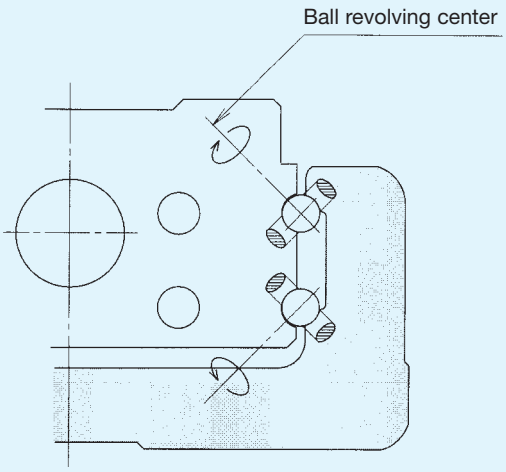

Fig. 5 KR Contact Structure

Space-saving

The one-piece structure with rails arranged on both sides and the ball screw in the center of the inner block forms an actuator that is minimal in size yet provides high rigidity and excellent accuracy.

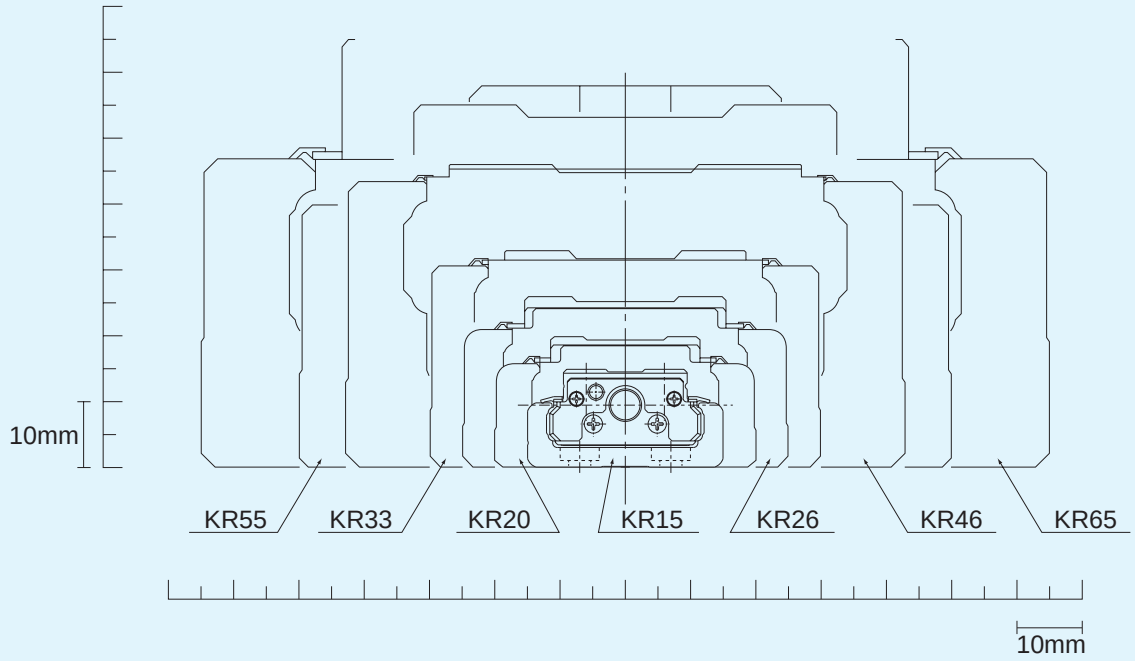

Fig. 6 Cross-Sectional View

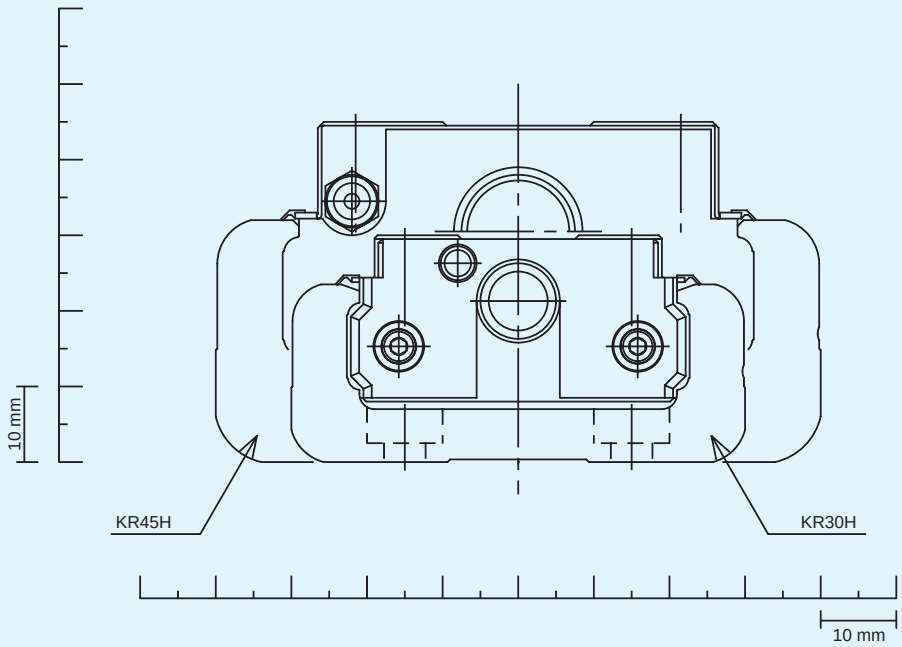

Fig.7 Cross-Sectional View

Types and Features

KR-A



Standard model.

KR-B

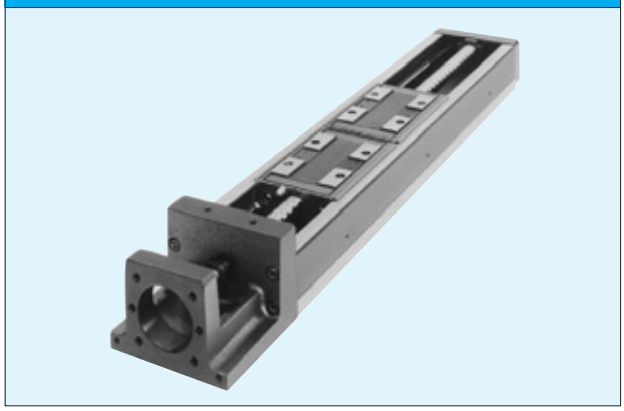

Built by adding another inner block to type KR-A, thereby enabling higher rigidity, load-bearing capacity and accuracy to be obtained.

KR-C

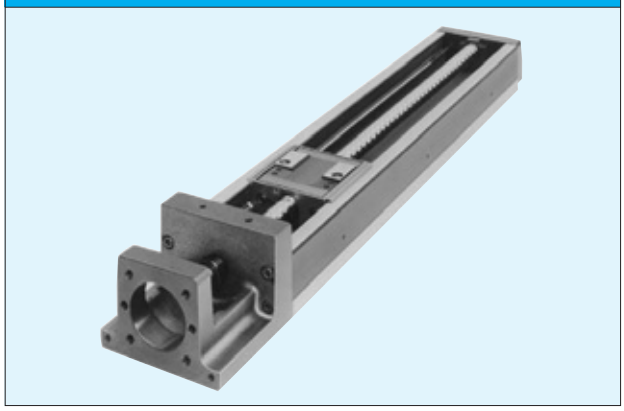

Modified by shortening the block of type KR-A to lengthen the stroke.
(Applicable models: KR30H, KR33, KR45H, KR46)

KR-D



Built by adding another inner block to type KR-C. Permits a span best suited for the host system, thereby enabling higher rigidity to be obtained.
(Applicable models: KR30H, KR33, KR45H, KR46)

Load Rating and Permissible Moment in Each Direction of Load Rating

Load Rating

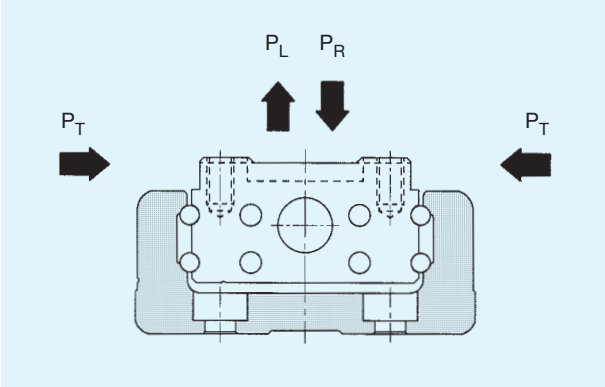

LM Guide

Type KR can bear loads in all four directions: radial, reverse-radial, and the two lateral directions. The basic load ratings of type KR are equal in all four directions (radial, reverse-radial and the two lateral directions). The values are given in Table 2.

Ball Screw

Because of the construction where the ball screw is driven through the inner block, type KR can bear an axial load. The values of basic load rating are presented in Table 2.

Support Bearing

Due to its construction, with an angular bearing assembled in housing A type KR can bear an axial load. The values for the basic load rating are given in Table 2.

LM Guide

The equivalent load for type KR when loads are exerted on its LM Guide in all four directions simultaneously can be obtained using the following equation:

$$P_E = P_R (P_L) + P_T$$

where

P_E :	equivalent load • In the radial direction • In the reverse-radial direction • In two lateral directions	[N]
P_R :	radial load	[N]
P_L :	reverse-radial load	[N]
P_T :	lateral load	[N]

Table 2 Load Rating

			Model No.	KR15		KR20	KR26	KR30H		KR33		KR45H		KR46		KR55	KR65
				KR 1501	KR 1502			KR30H06	KR30H10	KR3306	KR3310	KR45H10	KR45H20	KR4610	KR4620		
LM Guide	Basic dynamic load rating C [N]	Long-type block types A and B		1930		3590	7240	11600		11600		23300		27400		38100	50900
		Short-type block types C and D		–		–	–	4900		4900		11900		14000		–	–
	Basic static load rating C_0 [N]	Long-type block types A and B		3450		6300	12150	20200		20200		39200		45500		61900	80900
		Short-type block types C and D		–		–	–	10000		10000		19600		22700		–	–
	Radial clearance [mm]	Normal and high grades		+0.002 ~ -0.001		+0.002 ~ -0.003	+0.002 ~ -0.004	+0.002 ~ -0.004		+0.002 ~ -0.004		+0.003 ~ -0.006		+0.003 ~ -0.006		+0.004 ~ -0.007	+0.004 ~ -0.008
		Precision grade		-0.002 ~ -0.005		-0.003 ~ -0.007	-0.004 ~ -0.010	-0.004 ~ -0.012		-0.004 ~ -0.012		-0.006 ~ -0.016		-0.006 ~ -0.016		-0.007 ~ -0.019	-0.008 ~ -0.022
Ball screw	Basic dynamic load rating C_a [N]	Normal and high grades		340	230	660	2350	2840	1760	2840	1760	3140	3040	3140	3040	3620	5680
		Precision grade		340	230	660	2350	2250	1370	2250	1370	2940	3430	2940	3430	3980	5950
	Basic static load rating C_{0a} [N]	Normal and high grades		660	410	1170	4020	4900	2840	4900	2840	6760	7150	6760	7150	9290	14500
		Precision grade		660	410	1170	4020	2740	1570	2740	1570	3720	5290	3720	5290	6850	10700
	Screw-shaft diameter [mm]			5		6	8	10		10		15		15		20	25
	Lead [mm]			1	2	1	2	6	10	6	10	10	20	10	20	20	25
	Minor diameter [mm]			4,5		5,3	6,6	7,8		7,8		12,5		12,5		17,5	22
	Ball center-to-center diameter [mm]			5,15		6,15	8,3	10,5		10,5		15,75		15,75		20,75	26
Support bearing	Axial direction	Basic dynamic load rating C_a[N]		590		1000	1380	1790		1790		6660		6660		7600	13700
		Permissible axial load P_{0a}[N]		290		1240	1760	2590		2590		3240		3240		3990	5830

Notes:
- The load rating of the LM Guide is the value per inner block.
- The balls in the precision-grade ball screw (grade P) include spacer balls at a ratio of 1:1 for models KR33 and KR30H, KR 4610, and 2:1 for models KR45H20, KR4620, KR55, and KR65.

Static Permissible Moment (LM Guide)

The block of the KR can bear moments in all directions with only one nut block. Table 3 shows static permissible moments M_A, M_B, and M_C in each direction.

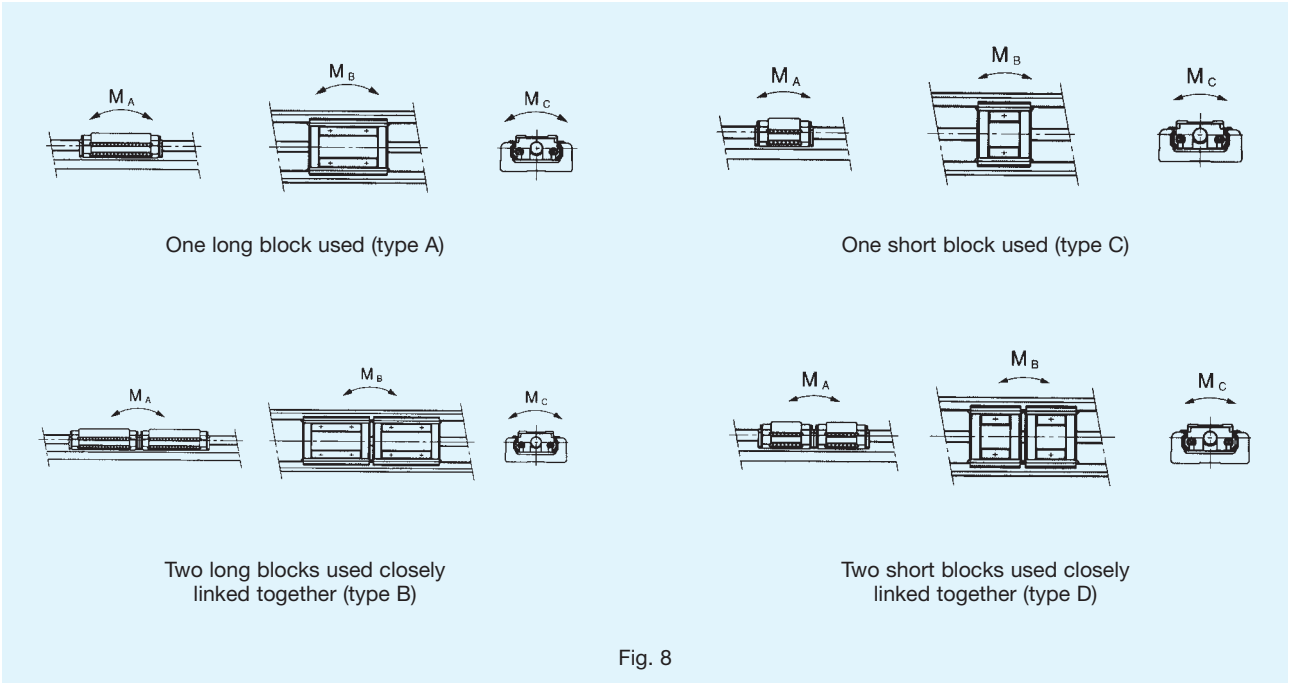

Fig. 8

Table 3 Static Permissible Moment Unit: Nm

Model size	Static Permissible Moment		
	M_A	M_B	M_C
KR15 - A	12.1	12.1	38
KR15 - B	70.3	70.3	76
KR20 - A	31	31	83
KR20 - B	176	176	165
KR26 - A	84	84	208
KR26 - B	480	480	416
KR30H - A	166	166	428
KR30H - B	908	908	857
KR30H - C	44	44	214
KR30H - D	319	319	427
KR33 - A	166	166	428
KR33 - B	908	908	857
KR33 - C	44	44	214
KR33 - D	319	319	427
KR45H - A	486	486	925
KR45H - B	2732	2732	1850
KR45H - C	130	130	463
KR45H - D	994	994	925
KR46 - A	547	547	1400
KR46 - B	2940	2940	2800
KR46 - C	149	149	700
KR46 - D	1010	1010	1400
KR55 - A	870	870	2280
KR55 - B	4890	4890	4570
KR65 - A	1300	1300	3920
KR65 - B	7230	7230	7840

Note: The values for types KR-B and D are those for two inner blocks used closely linked together.

Service Life

LM Guide Actuator KR consists of an LM Guide, a ball screw and support bearings. The service lives of these components can be calculated using the values for the basic dynamic load rating given in Table 2.

Calculating Service Life

1) LM Guide

$$L = \left(\frac{f_c \times C}{f_w \times P_c}\right)^3 \times 50 \text{ [km]}$$

L : nominal life (km)
(This refers to the total running distance that 90% of identical LM Guide Actuator units in a group, when operated independently under the same conditions, can achieve without developing flaking.)
C : basic dynamic load rating (N)
P_C : calculated load applied (N)
f_W : load factor (see Table 5)
f_C : contact factor (see Table 4)

- When KR's are used with close-linked double inner blocks and are subjected to a moment, calculate the equivalent load by multiplying the moment exerted by an equivalent factor selected from those given in Table 6.

$$P_m = K \times M$$

P_m : equivalent load (per block) (N)
K : moment-equivalent factor
M : developed moment (N × mm)
(If three or more blocks are used in a system or two blocks are separated from one another, please contact us.)

Particularly when moment MC is exerted on type KR-B or D:

$$P_m = \frac{K_c \times M_c}{2}$$

- When radial load (P) and a moment are exerted simultaneously, calculate the service life using the following equation:

$$P_E = P_m + P$$

P_E : total equivalent radial load (N)

Once nominal life (L) is obtained from this calculation, the service life in hours can be calculated using the following equation, if the stroke length and number of reciprocal operations are constant:

$$L_h = \frac{L \times 10^6}{2 \times \ell_s \times n_1 \times 60}$$

L_h : service life in hours (h)
l_s : stroke length (mm)
n_1 : number of reciprocal operations per minute (min^{-1})

2) Ball Screw and Support Bearing

$$L = \left(\frac{C_a}{f_w \times Fa}\right)^3 \times 10^6$$

L : nominal life (rev.)
(This refers to the total number of revolutions that 90% of ball screw units (support bearing) in a group, when operated independently under the same conditions, can achieve without developing flaking.)
C_a : basic dynamic load rating (N)
F_a : axial load (N)
f_W : load factor (see Table 5)

Once nominal life (L) is obtained from this calculation, the service life in hours can be calculated using the following equation, if the stroke length and number of reciprocal operations are constant:

$$L_h = \frac{L \times \ell}{2 \times \ell_s \times n_1 \times 60}$$

L_h : service life in hours (h)
ℓ_s : stroke length (mm)
n_1 : number of reciprocal operations per minute (min^{-1})
ℓ : Ball Screw lead (mm)

Contact Factor

When types KR-B and D are used with close-linked double inner blocks, multiply the basic load rating by a contact factor chosen from the table below.

Table 4 Contact Factor (f_c)

Type of block	f_c
A and C	1.0
B and D	0.81

Load Factor

As shown below

Table 5 Load Factor (f_w)

Vibration and impact	Velocity V	f_w
Very slight	Very low V ≦ 0.25 m/s	1.0~1.2
Slight	Low 0.25 < V ≦ 1.0 m/s	1.2~1.5
Intermediate	Intermediate 1.0 < V ≦ 2.0 m/s	1.5~2.0
Strong	High V > 2.0 m/s	2.0~3.5

Moment-equivalent-factor (LM Guide)

In a LM Guide operating subjected to a moment, the load distribution cannot be uniform, resulting in the exertion of an excessive load in localized areas. In such a case, calculate the load by multiplying the moment value by a moment-equivalent factor chosen from Table 6.

K_A, K_B, and K_C represent the moment-equivalent factors in directions M_A, M_B, and M_C, respectively.

Table 6 Moment-Equivalent Factor (K)

Model No.	K_A	K_B	K_C
KR15 - A	3.20×10^{-1}	3.20×10^{-1}	9.09×10^{-2}
KR15 - B	5.96×10^{-2}	5.96×10^{-2}	9.09×10^{-2}
KR20 - A	2.40×10^{-1}	2.40×10^{-1}	7.69×10^{-2}
KR20 - B	4.26×10^{-2}	4.26×10^{-2}	7.69×10^{-2}
KR26 - A	1.73×10^{-1}	1.73×10^{-1}	5.88×10^{-2}
KR26 - B	3.06×10^{-2}	3.06×10^{-2}	5.88×10^{-2}
KR30H - A	1.51×10^{-1}	1.51×10^{-1}	4.78×10^{-2}
KR30H - B	2.76×10^{-2}	2.76×10^{-2}	4.78×10^{-2}
KR30H - C	2.77×10^{-1}	2.77×10^{-1}	4.78×10^{-2}
KR30H - D	3.99×10^{-2}	3.99×10^{-2}	4.78×10^{-2}
KR33 - A	1.51×10^{-1}	1.51×10^{-1}	4.93×10^{-2}
KR33 - B	2.57×10^{-2}	2.57×10^{-2}	4.93×10^{-2}
KR33 - C	2.77×10^{-1}	2.77×10^{-1}	4.93×10^{-2}
KR33 - D	3.55×10^{-2}	3.55×10^{-2}	4.93×10^{-2}
KR45H - A	9.83×10^{-2}	9.83×10^{-2}	3.45×10^{-2}
KR45H - B	1.87×10^{-2}	1.87×10^{-2}	3.45×10^{-2}
KR45H - C	1.83×10^{-1}	1.83×10^{-1}	3.45×10^{-2}
KR45H - D	2.81×10^{-2}	2.81×10^{-2}	3.45×10^{-2}
KR46 - A	1.01×10^{-1}	1.01×10^{-1}	3.38×10^{-2}
KR46 - B	1.78×10^{-2}	1.78×10^{-2}	3.38×10^{-2}
KR46 - C	1.85×10^{-1}	1.85×10^{-1}	3.38×10^{-2}
KR46 - D	2.50×10^{-2}	2.50×10^{-2}	3.38×10^{-2}
KR55 - A	8.63×10^{-2}	8.63×10^{-2}	2.83×10^{-2}
KR55 - B	1.53×10^{-2}	1.53×10^{-2}	2.83×10^{-2}
KR65 - A	7.55×10^{-2}	7.55×10^{-2}	2.14×10^{-2}
KR65 - B	1.35×10^{-2}	1.35×10^{-2}	2.14×10^{-2}

K_A: Moment-equivalent factor in direction M_A
K_B: Moment-equivalent factor in direction M_B
K_C: Moment-equivalent factor in direction M_C

Note: The values for types KR-B and KR-D, are those for two inner blocks used closely linked together.

Notice for Use

Maximum Running Velocity and Production Limit Length

The maximum running velocity of KR type actuators is restricted by the critical velocity and the DN value of the ball screw, regardless of the maximum motor speed. Keep this in mind, particularly when using this type of actuator at high speed. In this case, the production limit length is represented by the LM rail length.

Lubrication

To obtain the full function of a linear-motion system, lubrication is essential. Use of such a system without lubrication accelerates wear on the rolling parts, thereby decreasing the service life. Normally, grease is fed approximately every 100 km of running distance, but the interval depends on the operating conditions. It is advisable that the greasing interval is set based on the results of an initial check.

Recommended grease: KR15 THK AFF
KR20 ~ 26: THK AFA
KR30H ~ KR65: THK AFB

For LM-Guide Actuators to be used in a clean room, low-dust-generation AFE grease is available at THK. Please contact THK if such grease is required.

Table 7 Maximum Running Velocity and Production-Limit Length Unit: mm

Model No.	Lead of ball screw	Rail length	Velocity [mm/s]		Production limit length	
			Precision grade	High and normal grades	Precision grade	High and normal grades
KR15	01	–	160	160	250	250
	02	–	330	330		
KR20	01	–	190	190	200	200
KR26	02	–	280	280	300	300
KR30H	06	150 200 300 400 500 600	660 660 660 660 660 400	470 470 470 470 470 400	600	600
	10	150 200 300 400 500 600	1100 1100 1100 1100 1100 670	790 790 790 790 790 670		
KR33	06	150 200 300 400 500 600	660 660 660 660 660 400	470 470 470 470 470 400	600	600
	10	150 200 300 400 500 600	1100 1100 1100 1100 1100 670	790 790 790 790 790 670		
KR45H	10	340 440 540 640 740 840 940	740 740 740 740 740 - -	520 520 520 520 520 520 430	800	1200
	20	340 440 540 640 740 840 940	1480 1480 1480 1480 1480 - -	1050 1050 1050 1050 1050 1050 870		
KR46	10	340 440 540 640 740 940	740 740 740 740 740 -	520 520 520 520 520 430	800	1200
	20	340 440 540 640 740 940	1480 1480 1480 1480 1480 -	1050 1050 1050 1050 1050 870		
KR55	20	980 1080 1180 1280 1380	1120 980 750 - -	800 800 750 630 530	1180	2000
KR65	25	980 1180 1380 1680	1120 1120 830 -	800 800 800 550	1380	2000

Accuracy Standards

The accuracy of type KR comprises positioning-accuracy reproducibility, positioning accuracy, backlash, and running parallelism.

1. Positioning-Repeatability

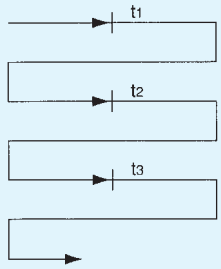

Fig. 9 Positioning Repeatability

Move the inner block from a starting point and stop it at a given point, measuring the stopped position. Repeat this measurement in the same direction as above seven times each in the middle of the stroke and at both ends. Take the maximum values at each stopping position as the measurements being sought. Divide the maximum difference among these maximum values by 2. Define the value thus obtained as the positioning repeatability, attaching "±" thereto.

2. Positioning Accuracy

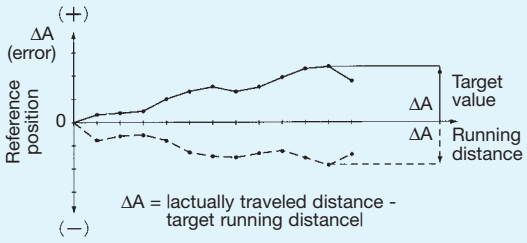

Fig. 11 Positioning Accuracy

Using the maximum stroke as the reference length, measure the distance actually traveled from the reference position, and determine the maximum difference between a measurement and target value. Express the positioning accuracy using the absolute value of this maximum difference.

3. Backlash

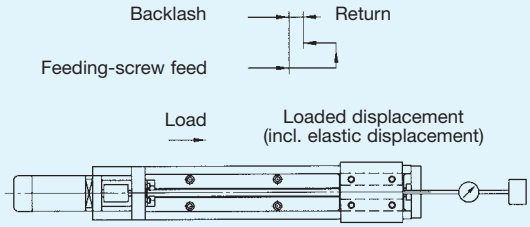

Fig. 10 Backlash

Using the feeder, move the inner block slightly. Define the reading of the test indicator at this time as the reference position. Without using the feeder, apply a load to the inner block in order to move it from this reference position in the same direction as above (table-feeding direction). Release the load and allow the inner block to return. Measure the distance between the returned-block position and the reference position.

Measure the same in the middle of the stroke and at both ends. Take the maximum of the measurements thus obtained as the backlash.

4. Running parallelism

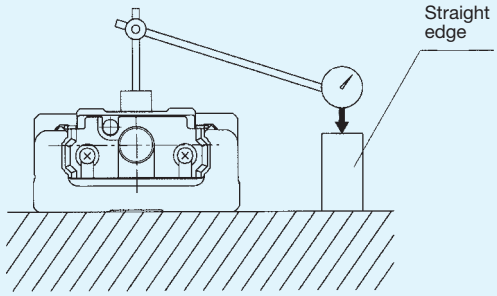

Fig. 12 Running Parallelism

Place a straight edge on a surface plate to which a unit of type KR is mounted. Using a test indicator, measure the parallelism over the entire inner-block stroke. Take the maximum of the measurements within the stroke as the parallelism.The brackets required to mount LM Guide Actuator type KR have been standardized. Made of aluminum, the brackets are lightweight in order to minimize inertia.

Accuracy Standards

The accuracy of type KR is divided into three grades: normal (no symbol), high (H), and precision (P). The standards for these grades are specified below.

Table 8-1 Normal Grade (no symbol)

Model No.	Rail length	Positionnig accuracy reproducibility	Positionnig	Running parallelism	Backlash	Starting torque [Ncm]
KR20	100 150 200	±0.010	No provision	No provision	0.020	0,5
KR26	150 200 250 300	±0.010	No provision	No provision	0.020	1,5
KR30H	150 200 300 400 500 600	±0.010	No provision	No provision	0.020	7
KR33	150 200 300 400 500 600	±0.010	No provision	No provision	0.020	7
KR45H	340 440 540 640 740 840 940	±0.010	No provision	No provision	0.020	10
KR46	340 440 540 640 740 940	±0.010	No provision	No provision	0.020	10
KR55	980 1080 1180 1280 1380	±0.010	No provision	No provision	0.050	12
KR65	980 1180 1380 1680	±0.010 ±0.012	No provision	No provision	0.050	12 15

Table 8-2 High Grade (H) Unit: mm

Model No.	Rail length	Positionnig accuracy reproducibility	Positionnig	Running parallelism	Backlash	Starting torque [Ncm]
KR15	75 100 125 150 175 200	±0.004	0.040	0.020	0.010	0,4
KR20	100 150 200	±0.005	0.060	0.025	0.010	0,5
KR26	150 200 250 300	±0.005	0.060	0.025	0.010	1,5
KR30H	150 200 300 400 500 600	±0.005	0.060 0.100	0.025 0.035	0.020	7
KR33	150 200 300 400 500 600	±0.005	0.060 0.100	0.025 0.035	0.020	7
KR45H	340 440 540 640 740 840 940	±0.005	0.100 0.120 0.150 0.150	0.035 0.040 0.050 0.050	0.020	10
KR46	340 440 540 640 740 940	±0.005	0.100 0.120 0.150	0.035 0.040 0.050	0.020	10
KR55	980 1080 1180 1280 1380	±0.005	0.180 0.250	0.050	0.050	12
KR65	980 1180 1380 1680	±0.008	0.180 0.200 0.280	0.050 0.055	0.050	12 15

Table 8-3 Precision Grade (P) Unit: mm

Model No.	Rail length	Positionnig accuracy reproducibility	Positionnig	Running parallelism	Backlash	Starting torque [Ncm]
KR15	75 100 125 150 175 200	±0.003	0.020	0.010	0.002	0,8
KR20	100 150 200	±0.003	0.020	0.010	0.003	1,2
KR26	150 200 250 300	±0.003	0.020	0.010	0.003	4
KR30H	150 200 300 400 500 600	±0.003	0.020 0.025	0.010 0.015	0.003	15
KR33	150 200 300 400 500 600	±0.003	0.020 0.025	0.010 0.015	0.003	15
KR45H	340 440 540 640 740	±0.003	0.025 0.030	0.015 0.020	0.003	15 17
KR46	340 440 540 640 740	±0.003	0.025 0.030	0.015 0.020	0.003	15 17
KR55	980 1080 1180	±0.005	0.035 0.040	0.025 0.030	0.003	17 20
KR65	980 1180 1380	±0.005	0.035 0.040	0.025 0.030	0.005	20 22

The evaluation methods for the accuracy grades must conform to THK Standards. The starting torque must be measured with lithium-soap-based grease No. 2 applied. For KR20 and 26, however, AFA Grease must be applied. For KR15 THK AFF Grease must be sealed in. When high-viscosity grease such as vacuum grease or clean-room grease is used, measurements may exceed the standards presented here. Therefore, the motor to be used must be chosen carefully.

Model-Number Coding

Symbol

KR33 10 A + 300L P 0 - 0 0 0 0

1 2 3 4 5 6 7 8 9 10

1 Model No.

2 Lead [mm]

3 Type of inner block / Quantity

4 Rail length [mm]

5 Accuracy grade (see Tab. 8)

6 Provision of a motor (see Tab. 9)

7 Provision of a cover (see Tab. 9)

8 Provision of a sensor (see Tab. 9)

9 Type of housing A (see Tab. 10 and Fig. 6-11)

10 Provision of a connecting plate

Table 9

Accuracy grade		Motor		Cover		Sensor	
Symbol	Meaning	Symbol	Meaning	Symbol	Meaning	Symbol	Meaning
No symbol	Normal	0	None	0	None	0	None
						1	Sensor rail provided
						2	Photosensor EE-SX671 (Omron)
						4	Proximity sensor GL-12F (SUNX)
H	High	1	Yes	1	Cover provided	5	Proximity sensor GXL-N12F (SUNX)
						6	Photosensor EE-SX674 (Omron)
P	Precision			X	Bellows provided (Europe)	7	Proximity sensor APM-D3 (SUNX)
						X(1)	Proximity sensor TL-W3M__ (Omron)

(1)

Available Sensors	Specification
TL-W3MC1	NPN-NO
TL-W3MC2	NPN-NC
TL-W3MB1	PNP-NO
TL-W3MB2	PNP-NC

Please note the number and type when ordering.
Example: 2 x TL-W3MB2 and 1 x TL-W3MB1

Table 10 Specification Motor Flange

Option	Specification
KR 33 Housing A without motor flange	□□30 / □□40
KR 46 Housing A without motor flange	□□50 / □□60
KR 55 Housing A without motor flange	□□10
KR 65 Housing A without motor flange	□□10

Motor Flange Design

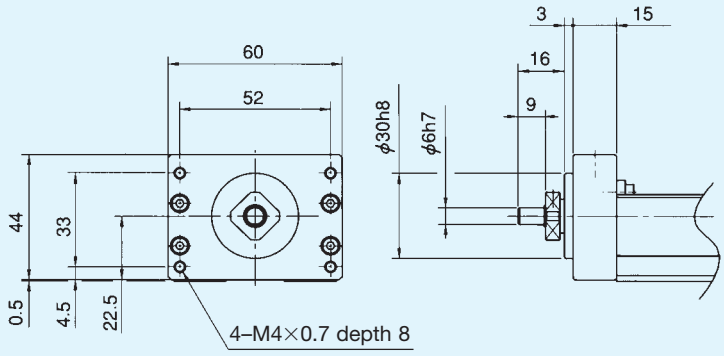

Fig. 13 KR33 Housing A without motor flange (Specification□□ 30)

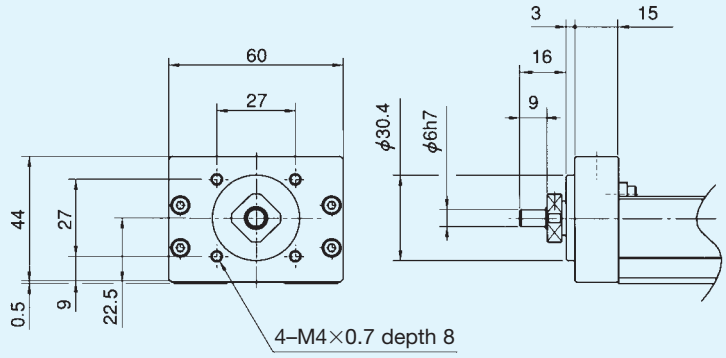

Fig. 14 KR33 Housing A without motor flange (Specification□□ 40)

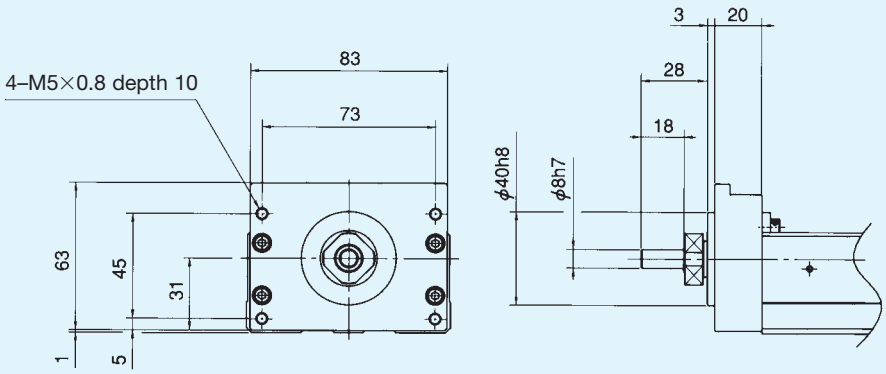

Fig. 15 KR46 Housing A without motor flange (Specification□□ 50)

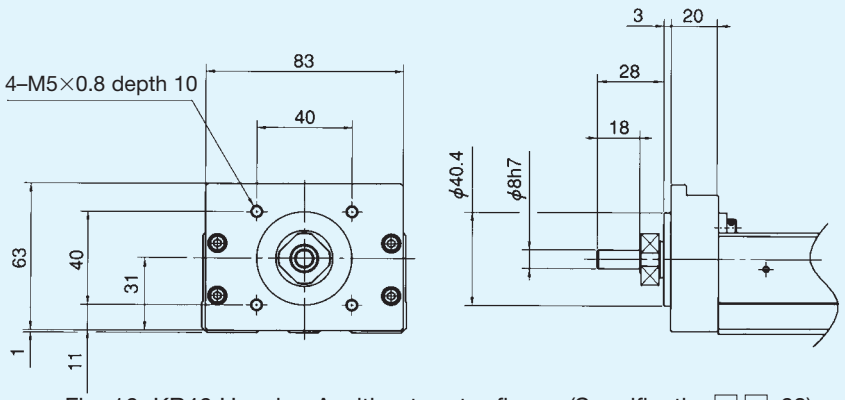

Fig. 16 KR46 Housing A without motor flange (Specification□□ 60)

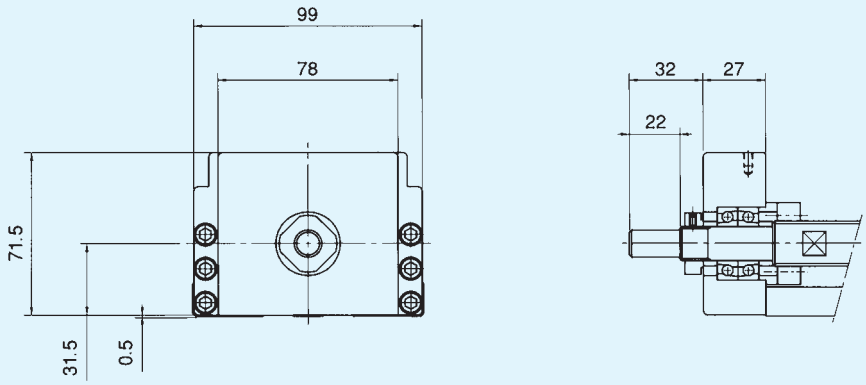

Fig. 17 KR55 Housing A without motor flange (Specification □□10)

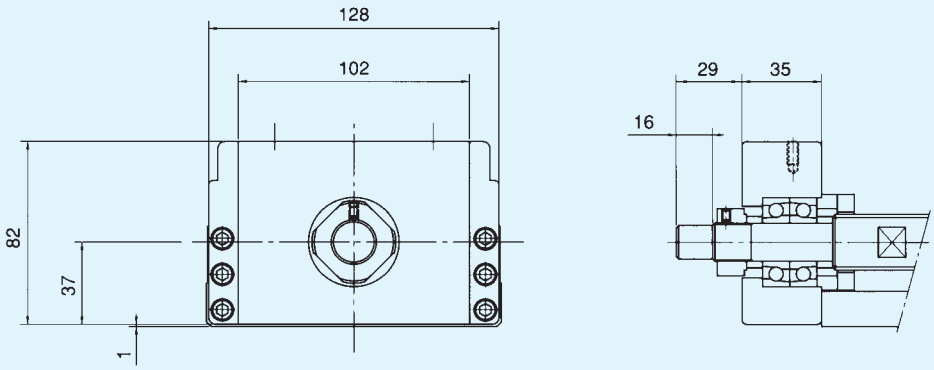

Fig. 18 KR65 Housing A without motor flange (Specification □□10)

KR1501 A, KR1502 A with One Block
KR1501 B, KR1502 B with Two Blocks

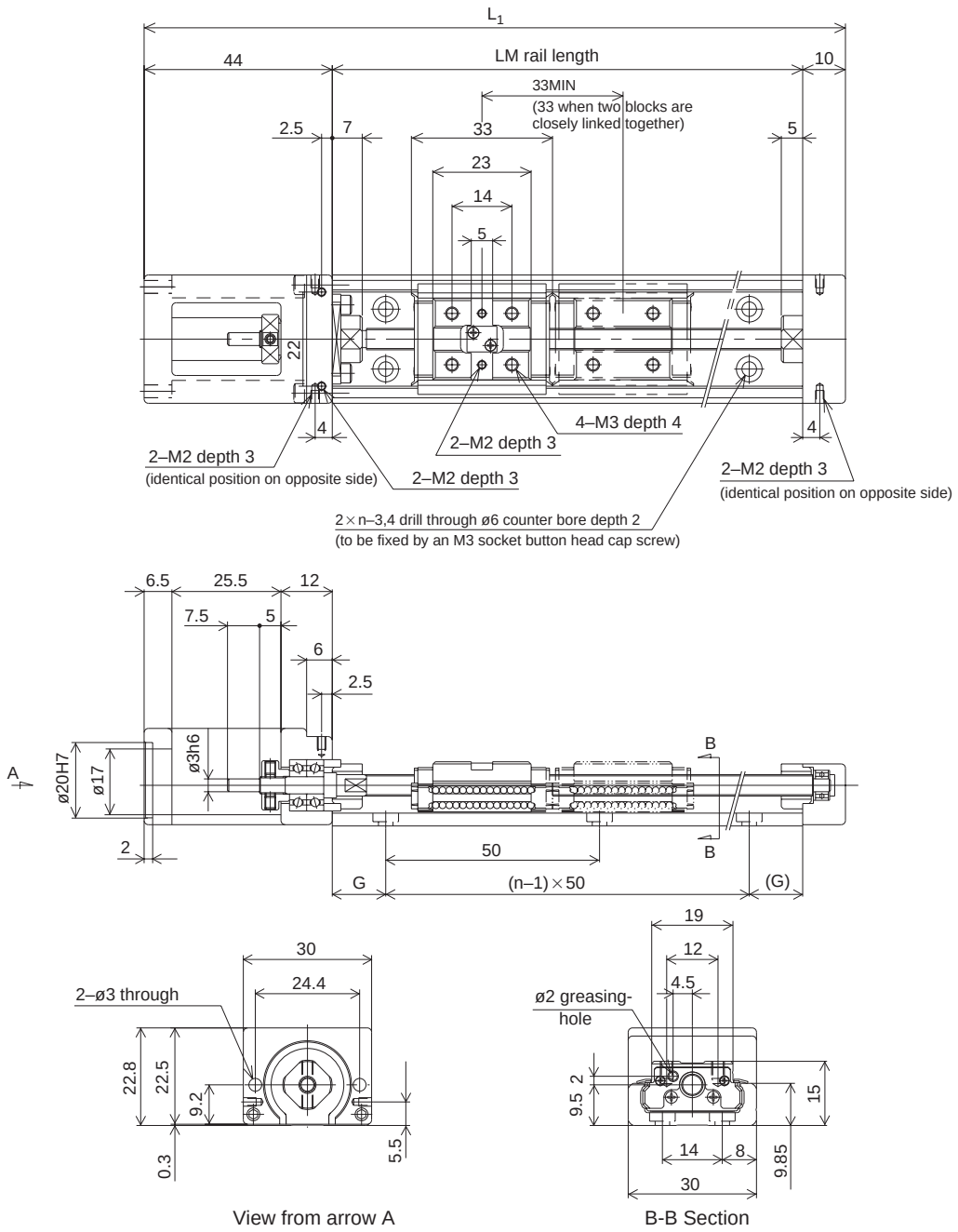

Table 11

LM rail length [mm]	Overall length L1 [mm]	Possible stroke length [mm]		G [mm]	n	Total mass of unit [kg]	
		Type A	Type B*			Type A	Type B
75	129	31.4	——	12.5	2	0.19	——
100	154	56.4	——	25.0	2	0.22	——
125	179	81.4	48.4	12.5	3	0.25	0.292
150	204	106.4	73.4	25.0	3	0.28	0.322
175	229	131.4	98.4	12.5	4	0.31	0.352
200	254	156.4	123.4	25.0	4	0.34	0.382

* The possible stroke length for type B are the maximum values for close-linked double blocks.

KR2001 A with One Block
KR2001 B with Two Blocks

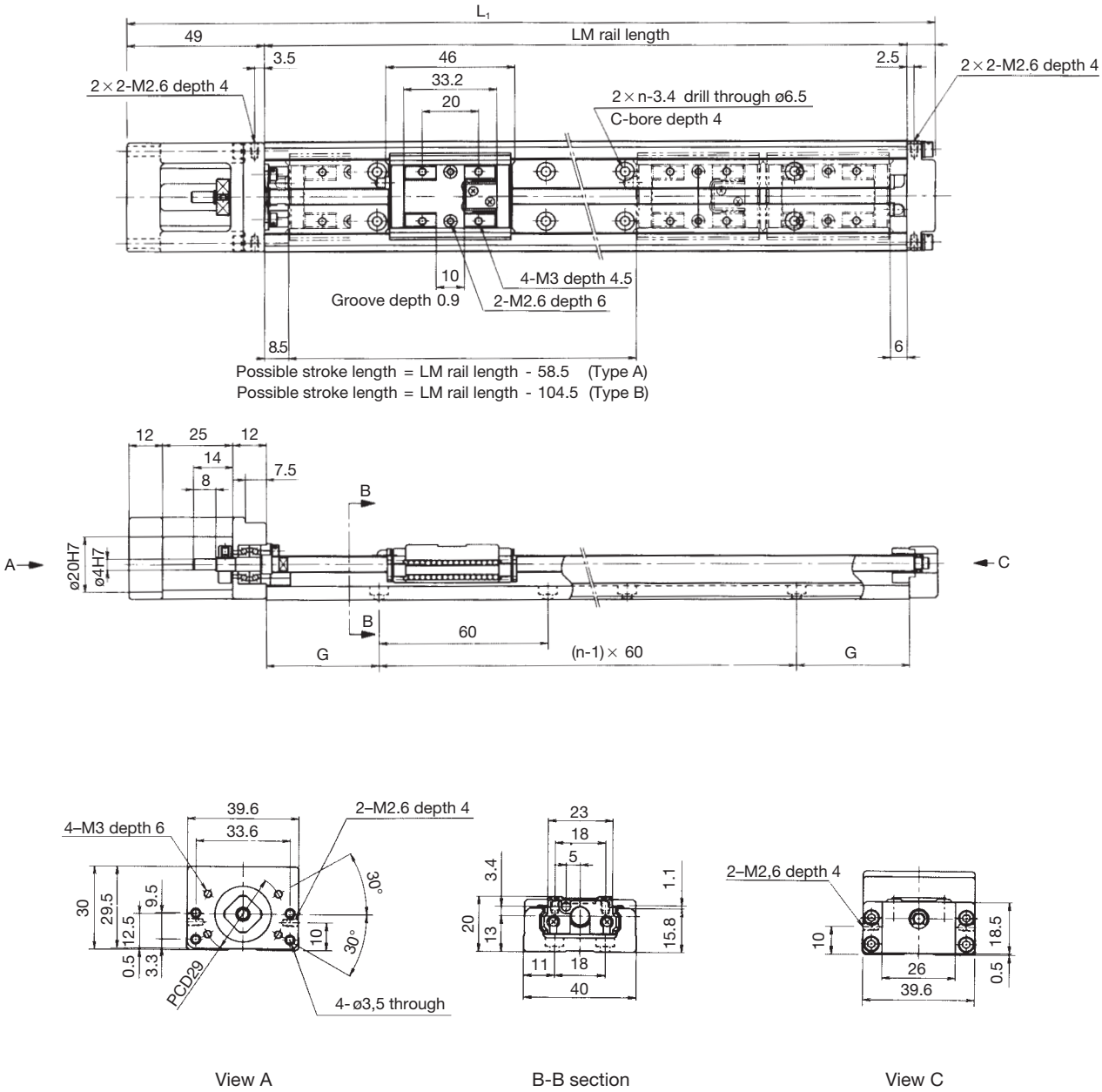

View A B-B section View C

Table 12

LM rail length [mm]	Overall length L1 [mm]	Possible stroke length [mm]		G [mm]	n	Total mass of unit [kg]	
		Type A	Type B*			Type A	Type B
100	159	41.5	——	20	2	0.450	——
150	209	91.5	45.5	15	3	0.580	0.655
200	259	141.5	95.5	40	3	0.720	0.795

* The possible stroke length values for model KR2001B are represented by those for closely-linked double blocks.

KR2602 A with One Block
KR2602 B with Two Blocks

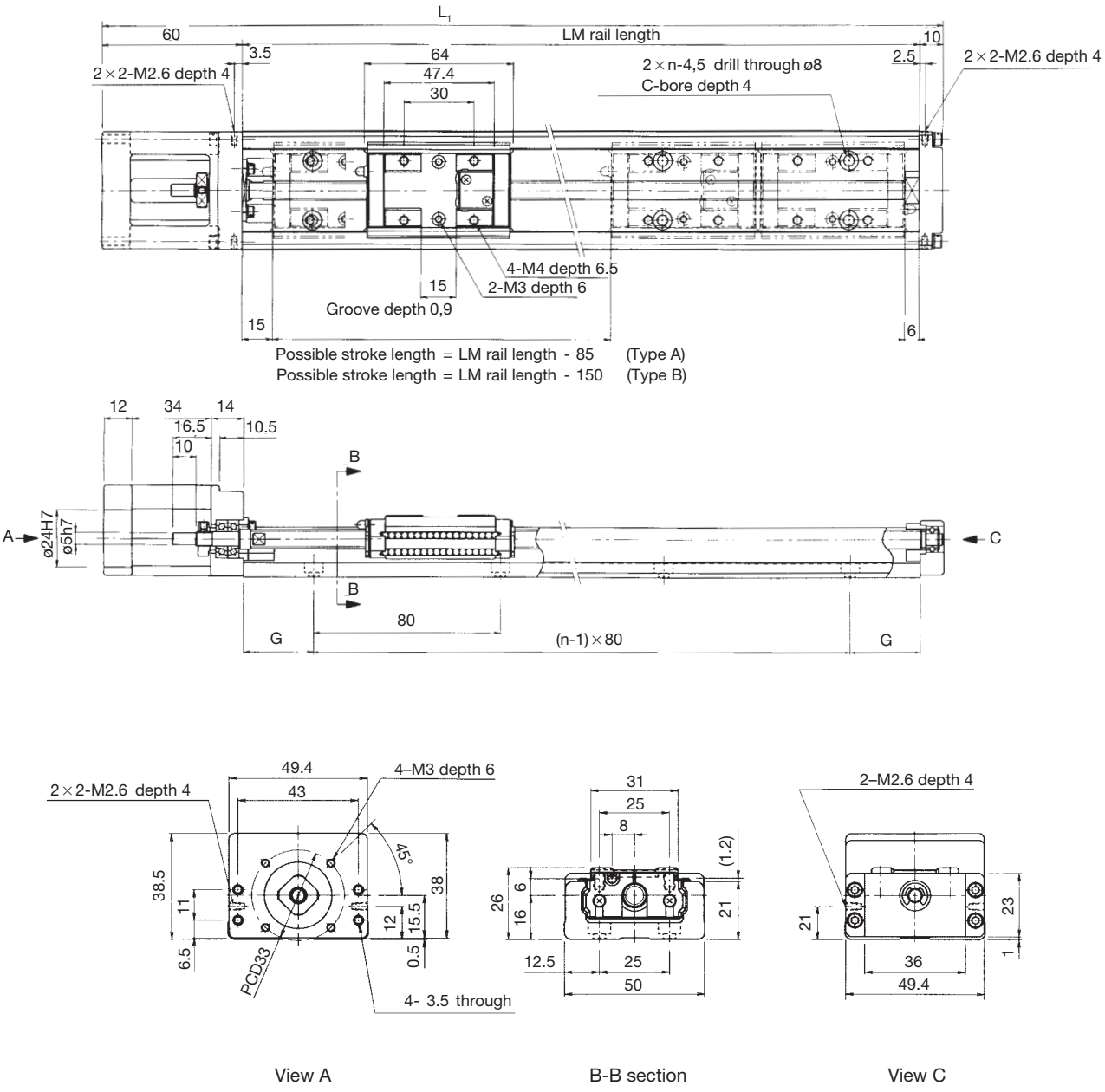

View A B-B section View C

Table 13

LM rail length [mm]	Overall length L1 [mm]	Possible stroke length [mm]		G [mm]	n	Total mass of unit [kg]	
		Type A	Type B*			Type A	Type B
150	220	69	——	35	2	0.99	——
200	270	119	55	20	3	1.20	1.38
250	320	169	105	45	3	1.41	1.59
300	370	219	155	30	4	1.62	1.80

* The possible stroke length values for Type B are represented by those for closely-linked double blocks.

KR30H A with One Long Block
KR30H B with Two Long Blocks

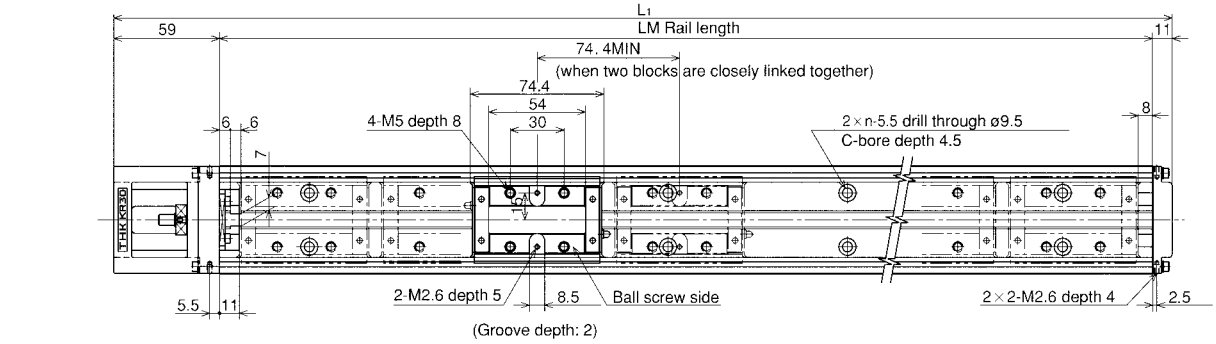

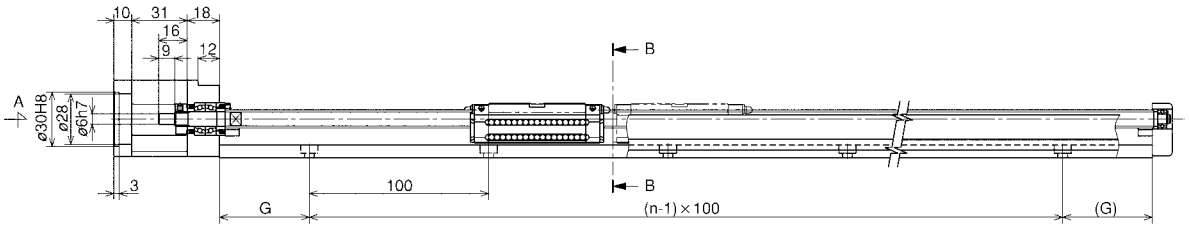

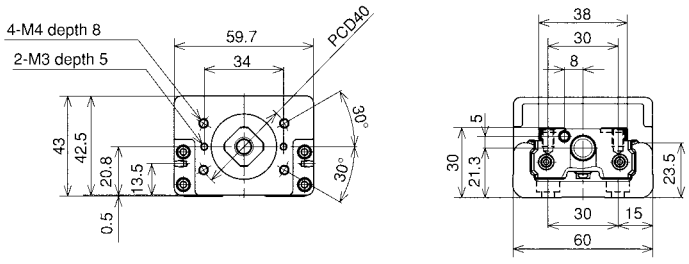

View A B-B section

Table 14

LM rail length [mm]	Overall length L1 [mm]	Possible stroke length [mm]		G [mm]	n	Total mass of unit [kg]	
		Type A	Type B*			Type A	Type B
150	220	58.8	——	25	2	1.40	——
200	270	108.8	——	50	2	1,60	——
300	370	208.8	134.4	50	3	2.20	2.50
400	470	308.8	234.4	50	4	2.70	3.00
500	570	408.8	334.4	50	5	3.20	3.50
600	670	508.8	434.4	50	6	3.80	4.10

* The possible stroke length for type B are the maximum values for close-linked double blocks.

KR30H C with One Short Block
KR30H D with Two Short Blocks

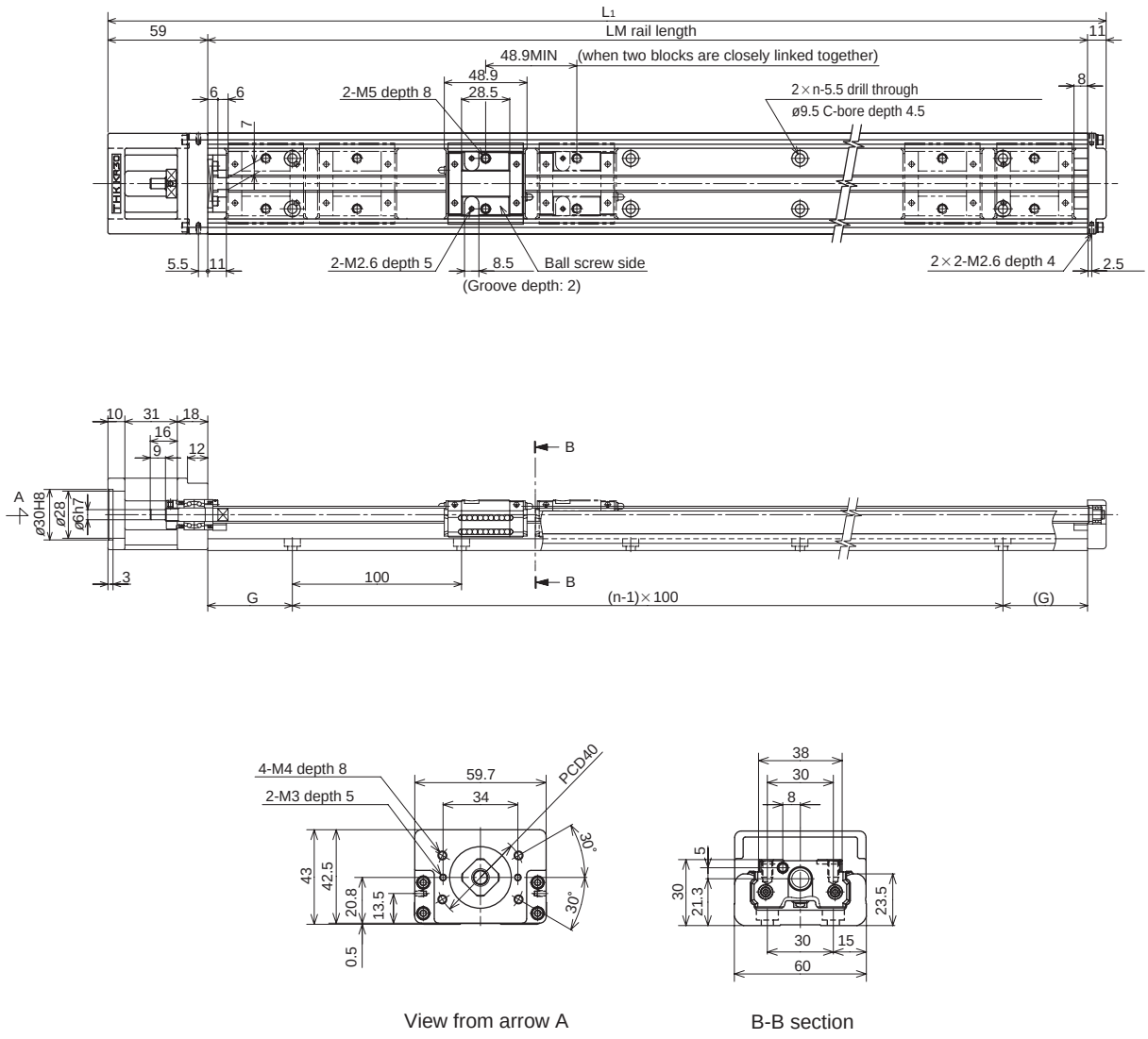

View from arrow A

B-B section

Table 15

LM rail length [mm]	Overall length L1 [mm]	Possible stroke length [mm]		G [mm]	n	Total mass of unit [kg]	
		Type C	Type D*			Type C	Type D
150	220	84.3	35.4	25	2	1.30	1.47
200	270	134.3	85.4	50	2	1.50	1.67
300	370	234.3	185.4	50	3	2.10	2.27
400	470	334.3	285.4	50	4	2.60	2.77
500	570	434.3	385.4	50	5	3.10	3.27
600	670	534.3	485.4	50	6	3.70	3.87

* The possible stroke length for type D are the maximum values for close-linked double blocks.

KR3306A, KR3310A with One Long Block
KR3306B, KR3310B with Two Long Blocks

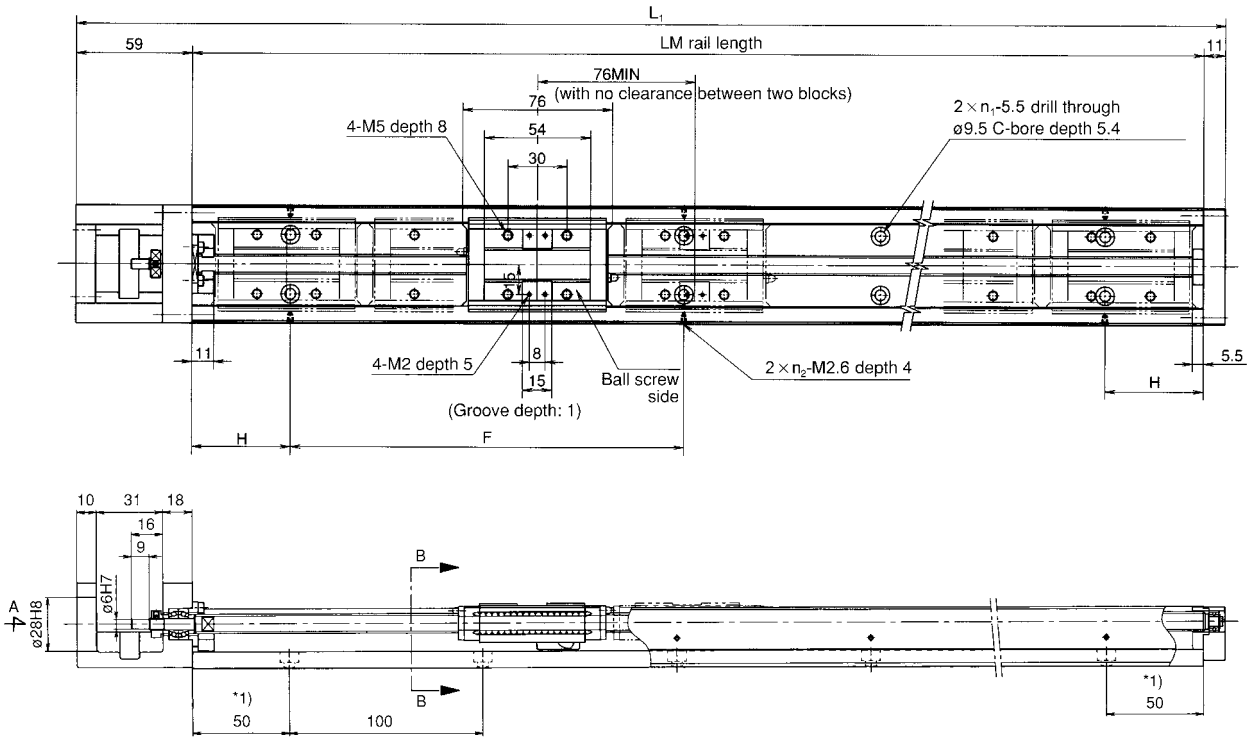

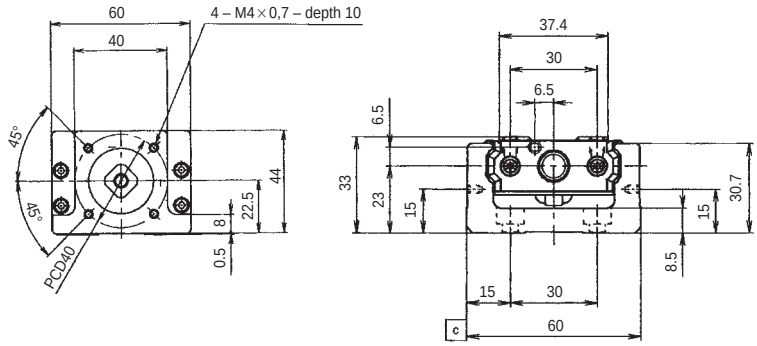

View A B-B section

1) 25 mm for 150 mm rail length.

Table 16

LM rail length [mm]	Overall length L1 [mm]	Possible stroke length [mm]		H [mm]	F [mm]	n1	n2	Total mass of unit [kg]	
		Type A	Type B*					Type A	Type B
150	220	61.5	——	25	100	2	2	1.70	——
200	270	111.5	——	50	100	2	2	2.00	——
300	370	211.5	135.5	50	200	3	2	2.60	2.95
400	470	311.5	235.5	100	200	4	2	3.20	3.55
500	570	411.5	335.5	50	200	5	3	3.90	4.25
600	670	511.5	435.5	100	200	6	3	4.50	4.85

* The possible stroke length for type B are the maximum values for close-linked double blocks.

KR3306C, KR3310C with One Short Block
KR3306D, KR3310D with Two Short Blocks

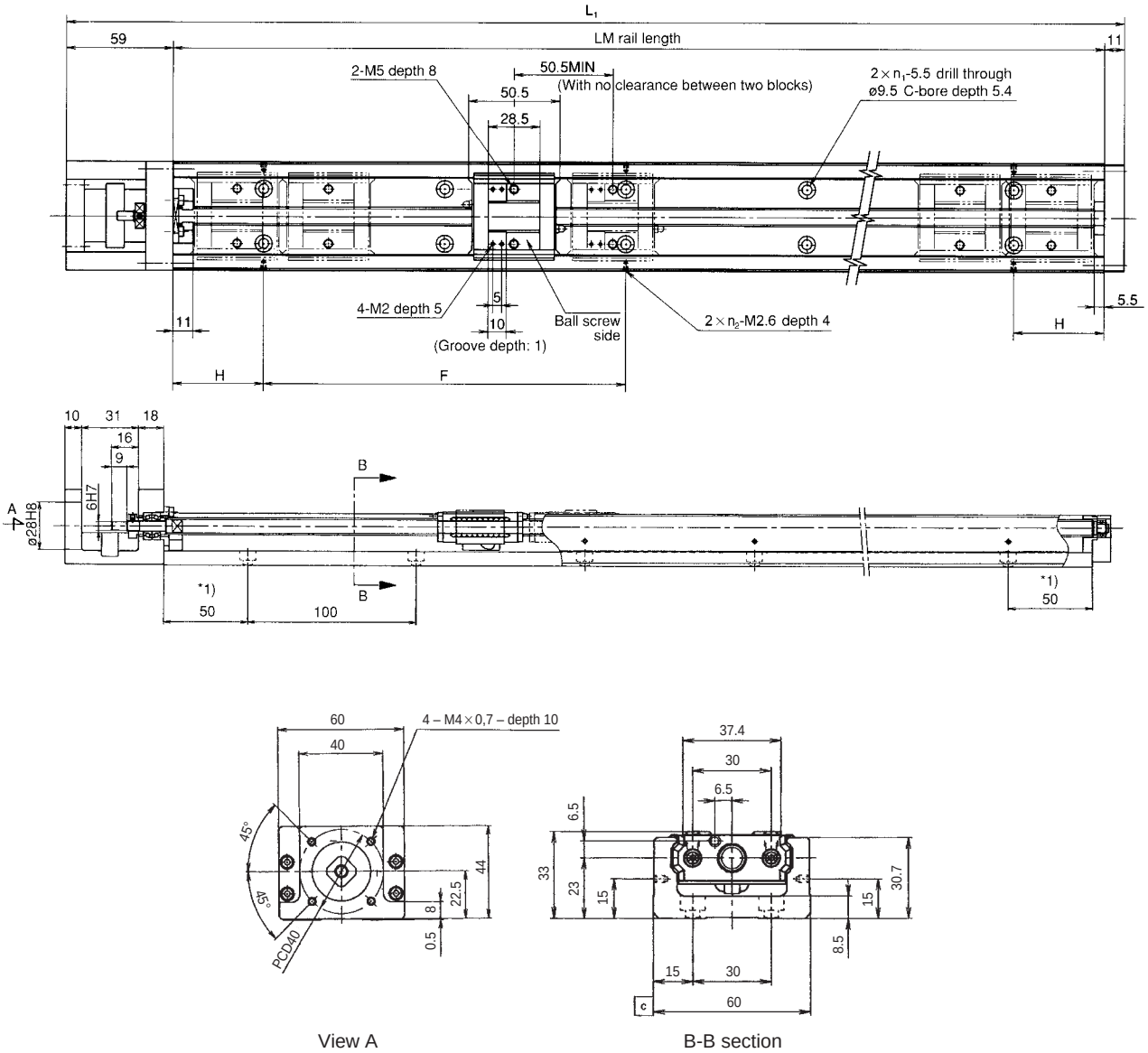

[1] 25 mm for 150 mm rail length.

Table 17

LM rail length [mm]	Overall length L1 [mm]	Possible stroke length [mm]		H [mm]	F [mm]	n1	n2	Total mass of unit [kg]	
		Type C	Type D*					Type C	Type D
150	220	87	36.5	25	100	2	2	1.60	1.83
200	270	137	86.5	50	100	2	2	1.90	2.13
300	370	237	186.5	50	200	3	2	2.50	2.73
400	470	337	286.5	100	200	4	2	3.10	3.33
500	570	437	386.5	50	200	5	3	3.80	4.03
600	670	537	486.5	100	200	6	3	4.40	4.63

* The possible stroke length for type D are the maximum values for close-linked double blocks.

KR45H A with One Long Block
KR45H B with Two Long Blocks

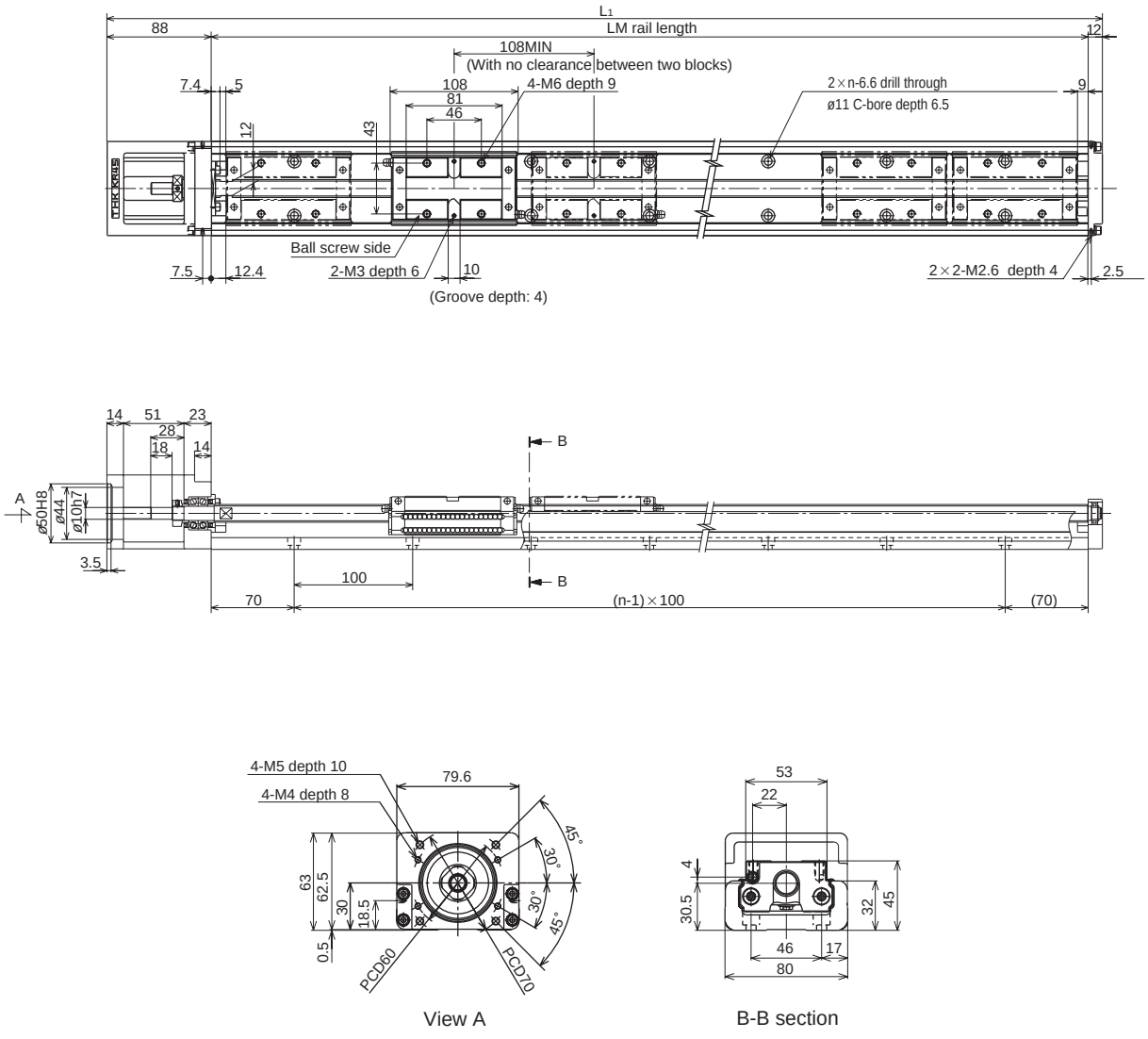

View A B-B section

Table 18

LM rail length [mm]	Overall length L1 [mm]	Possible stroke length [mm]		n	Total mass of unit [kg]	
		Type A	Type B*		Type A	Type B
340	440	213	105	3	5.10	6.05
440	540	313	205	4	6.10	7.05
540	640	413	305	5	7.10	8.05
640	740	513	405	6	8.10	9.05
740	840	613	505	7	9.10	10.05
840	940	713	605	8	10.10	11.05
940	1040	813	705	9	11.20	12.15

* The possible stroke length for type B are the maximum values for close-linked double blocks.

KR45H C with One Short Block
KR45H D with Two Short Blocks

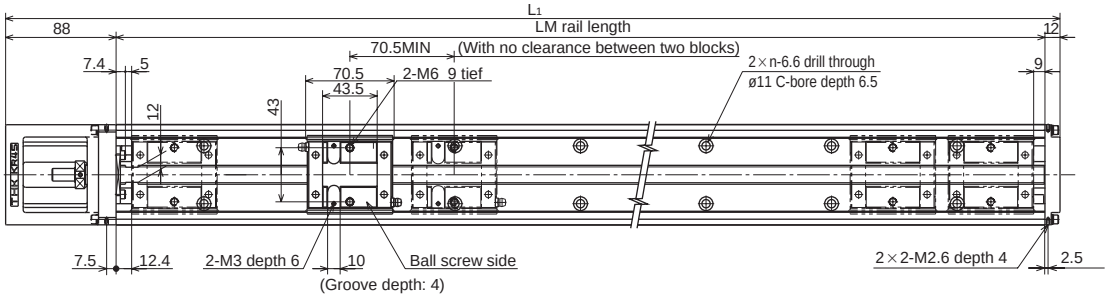

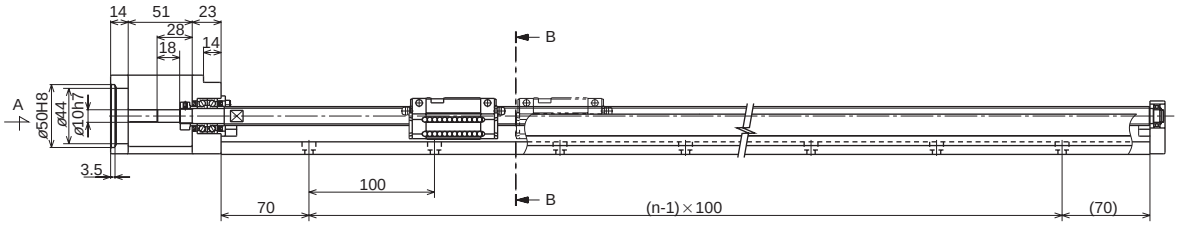

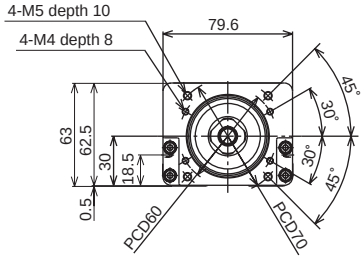

View A

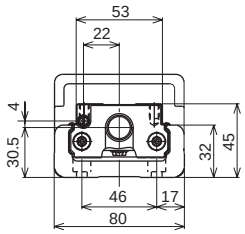

B-B section

Table 19

LM rail length [mm]	Overall length L1 [mm]	Possible stroke length [mm]		n	Total mass of unit [kg]	
		Type C	Type D*		Type C	Type D
340	440	250.5	180	3	4.70	5.23
440	540	350.5	280	4	5.70	6.23
540	640	450.5	380	5	6.70	7.23
640	740	550.5	480	6	7.70	8.23
740	840	650.5	580	7	8.70	9.23
840	940	750.5	680	8	9.70	10.23
940	1040	850.5	780	9	10.80	11.33

* The possible stroke length for type D are the maximum values for close-linked double blocks.

KR4610A, KR4620A with One Long Block
KR4610B, KR4620B with Two Long Blocks

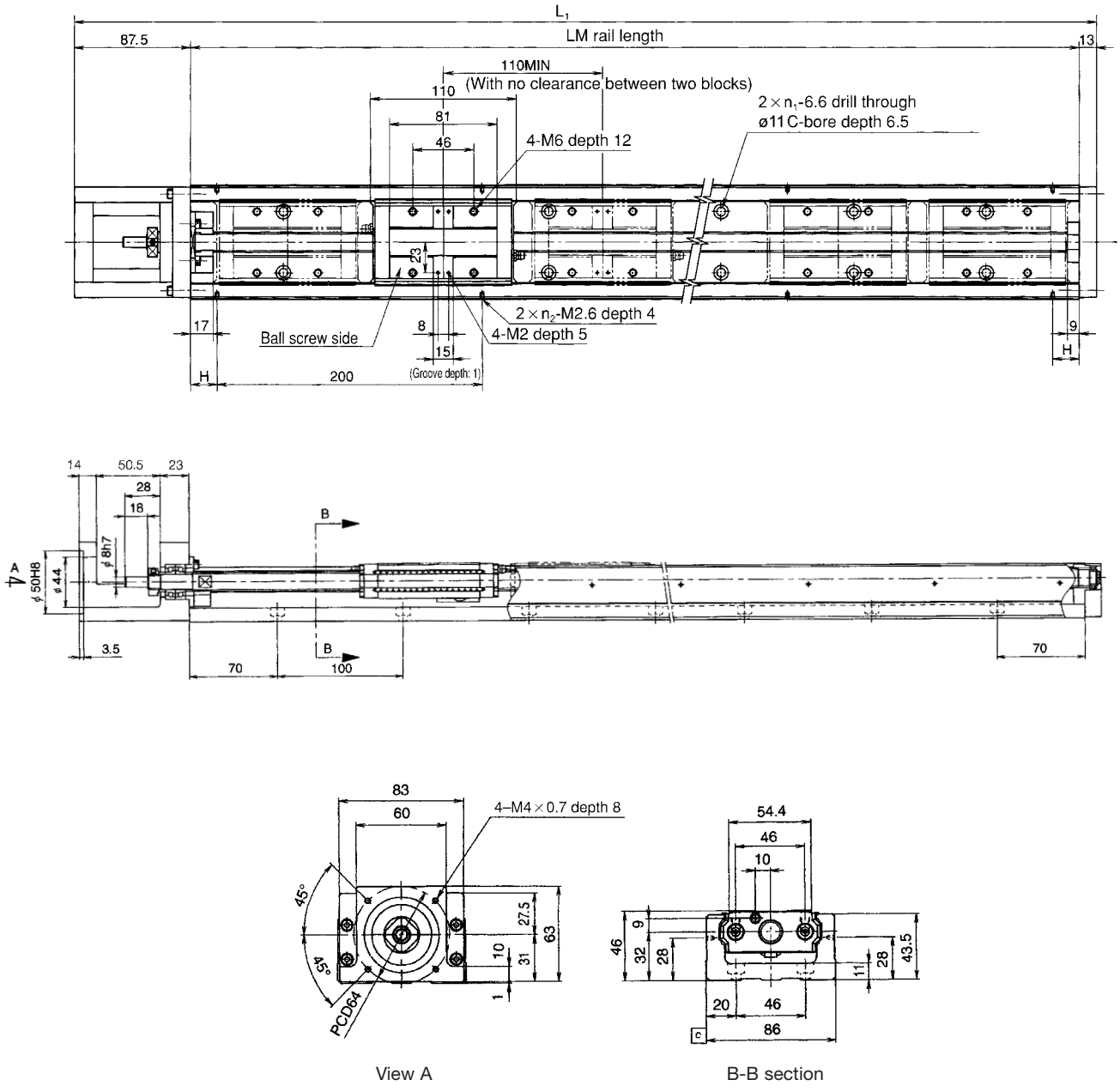

View A B-B section

Table 20

LM rail length [mm]	Overall length L_1 [mm]	Possible stroke length [mm]		H [mm]	n_1	n_2	Total mass of unit [kg]	
		Type A	Type B*				Type A	Type B
340	440.5	208	98	70	3	2	7.70	8.90
440	540.5	308	198	20	4	3	9.00	10.20
540	640.5	408	298	70	5	3	10.30	11.50
640	740.5	508	398	20	6	4	11.60	12.80
740	840.5	608	498	70	7	4	12.80	14.00
940	1040.5	808	698	70	9	5	15.30	16.50

* The possible stroke length for type B are the maximum values for close-linked double blocks.

KR4610C, KR4620C with One Short Block
KR4610D, KR4620D with Two Short Blocks

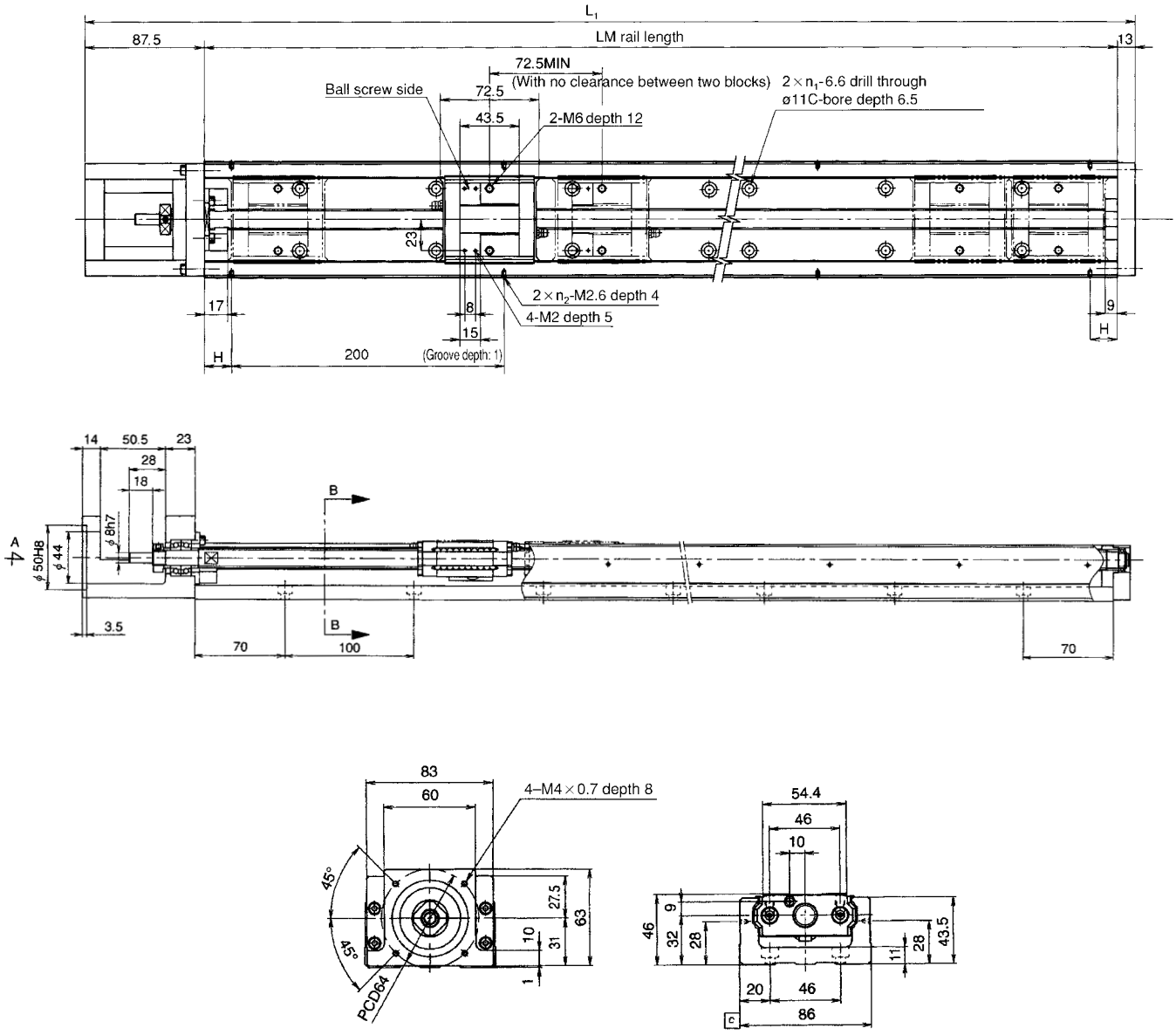

View A B-B section

Table 21

LM rail length [mm]	Overall length L_1 [mm]	Possible stroke length [mm]		H [mm]	n_1	n_2	Total mass unit [kg]	
		Type C	Type D*				Type C	Type D
340	440.5	245.5	173	70	3	2	7.30	8.10
440	540.5	345.5	273	20	4	3	8.60	9.40
540	640.5	445.5	373	70	5	3	9.90	10.70
640	740.5	545.5	473	20	6	4	11.20	12.00
740	840.5	645.5	573	70	7	4	12.40	13.20
940	1040.5	845.5	773	70	9	5	14.90	15.70

* The possible stroke length for type D are the maximum values for close-linked double blocks.

KR5520A with One Block
KR5520B with Two Blocks

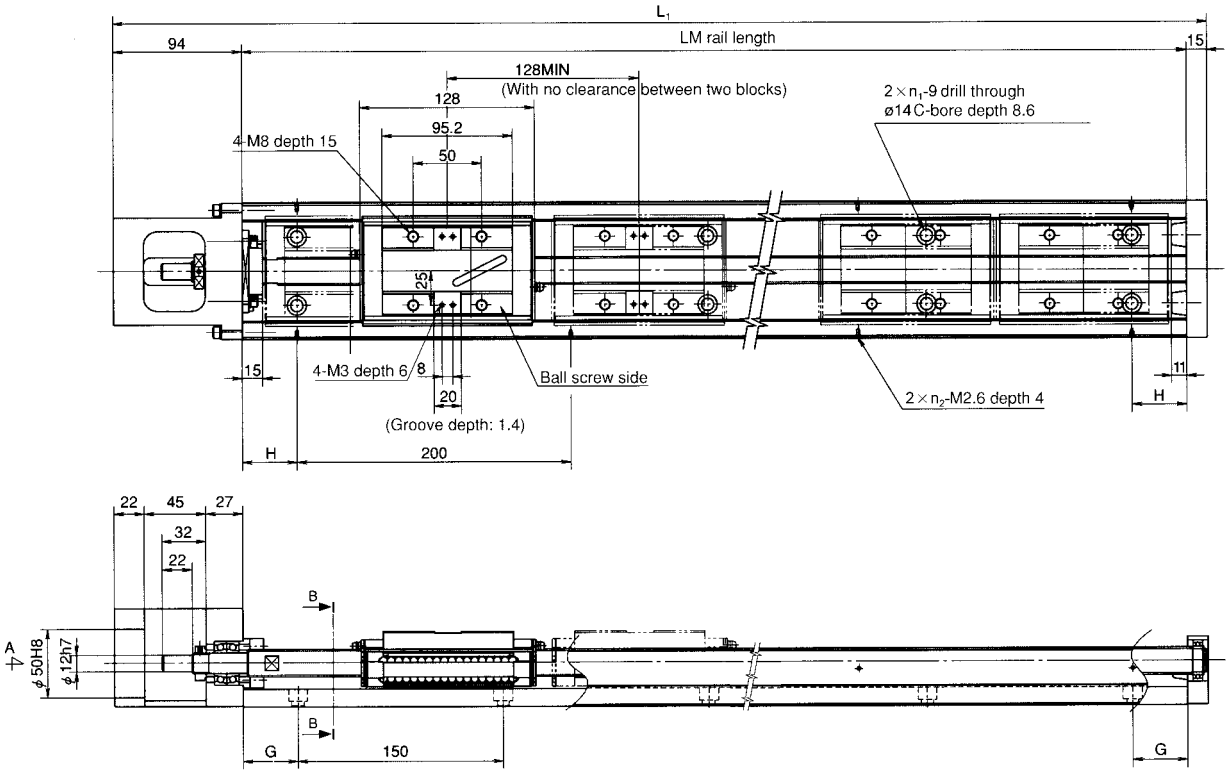

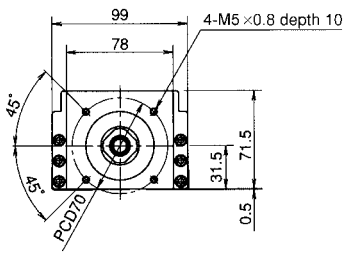

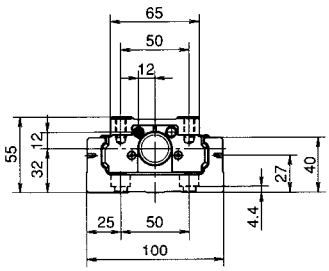

View A B-B section

Table 22

LM rail length [mm]	Overall length L1 [mm]	Possible stroke length [mm]		H [mm]	G	n1	n2	Total mass of unit [kg]	
		Type A	Type B*					Type A	Type B
980	1089	826	698	90	40	7	5	19.90	21.60
1080	1189	926	798	40	15	8	6	21.70	23.40
1180	1289	1026	898	90	65	8	6	23.40	25.10
1280	1389	1126	998	40	40	9	7	25.10	26.80
1380	1489	1226	1098	90	15	10	7	26.90	28.60

* The possible stroke length for type B are the maximum values for close-linked double blocks.

KR6525A with One Block
KR6525B with Two Blocks

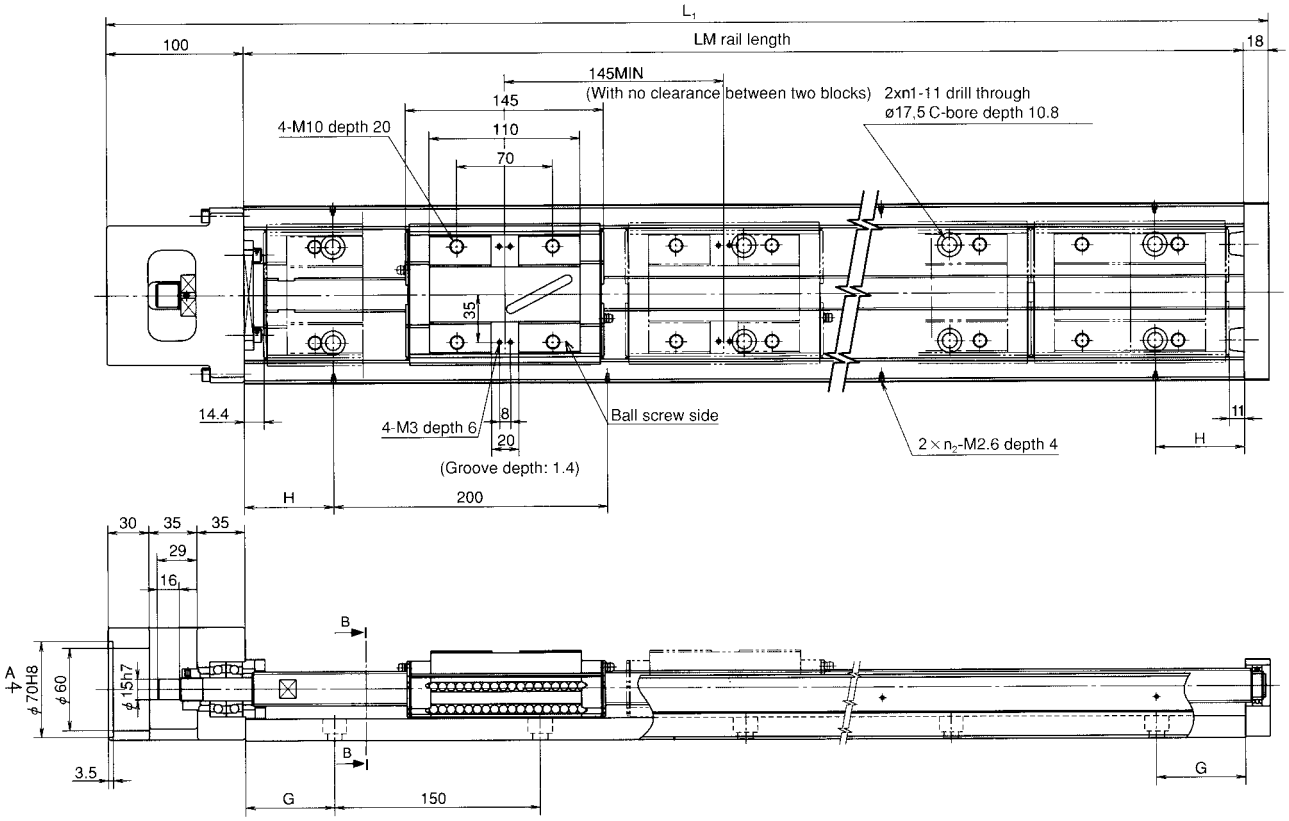

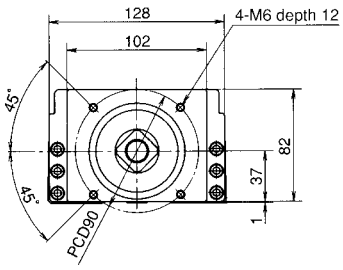

View A

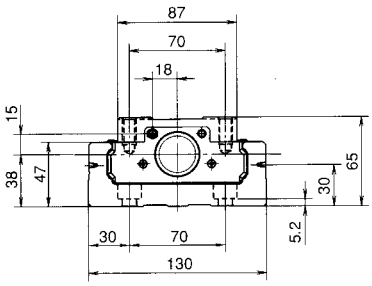

B-B Section

Table 23

LM rail length [mm]	Overall length L1 [mm]	Possible stroke length [mm]		H [mm]	G [mm]	n1	n2	Total mass of unit [kg]	
		Type A	Type B*					Type A	Type B
980	1098	810	665	90	40	7	5	31.60	34.60
1180	1298	1010	865	90	65	8	6	37.00	40.00
1380	1498	1210	1065	90	90	9	7	42.40	45.40
1680	1798	1510	1365	40	90	11	9	50.50	53.50

* The possible stroke length for type B are the maximum values for close-linked double blocks.

KR1501 A, KR1502 A with One Block and Cover
KR1501 B, KR1502 B with Two Blocks and Cover

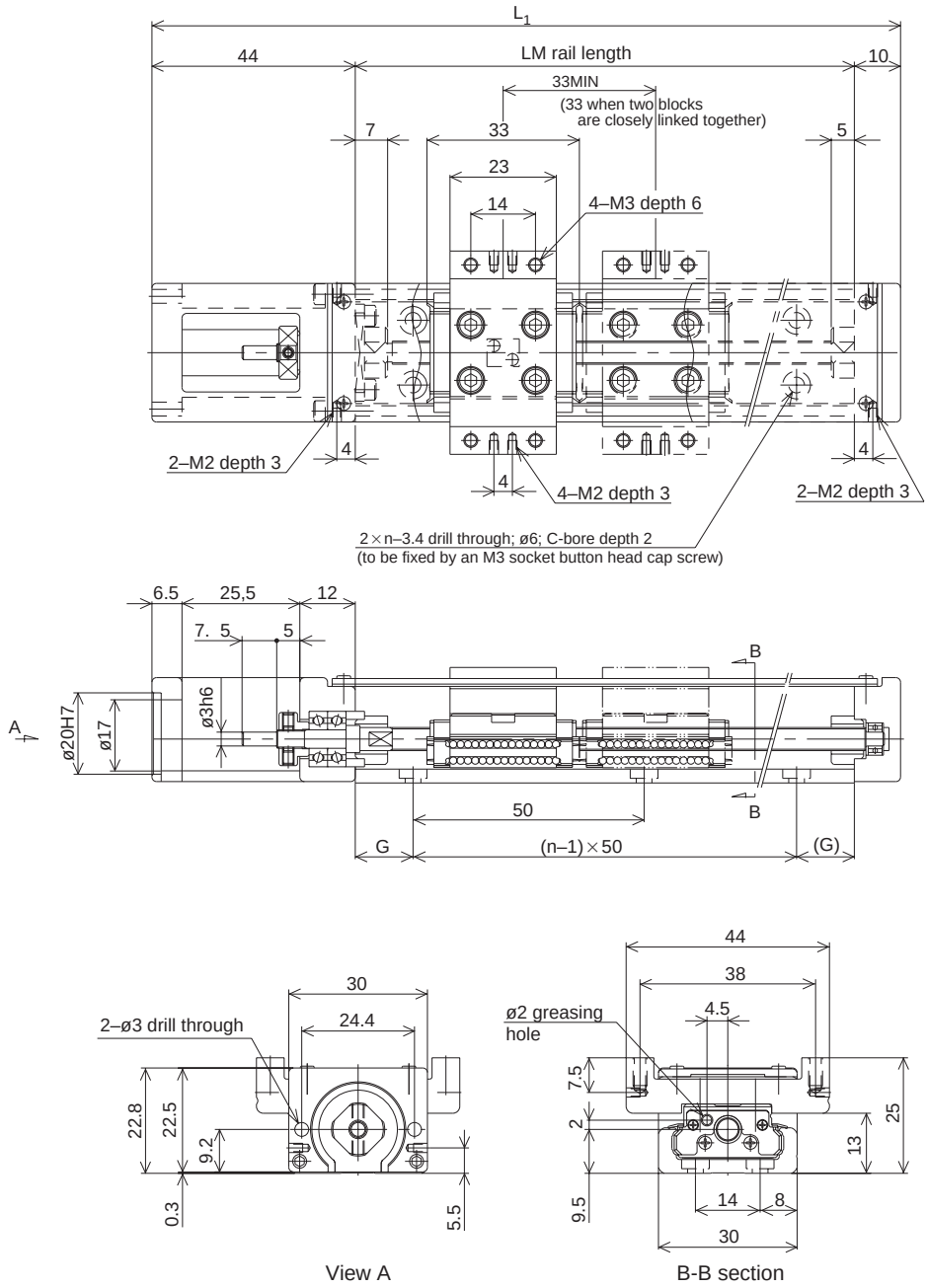

Table 24

LM rail length [mm]	Overall length L1 [mm]	Possible stroke length [mm]		G [mm]	n	Total massof unit [kg]	
		Type A	Type B*			Type A	Type B
75	129	31.4	——	12.5	2	0.23	——
100	154	56.4	——	25.0	2	0.26	——
125	179	81.4	48.4	12.5	3	0.30	0.364
150	204	106.4	73.4	25.0	3	0.33	0.394
175	229	131.4	98.4	12.5	4	0.36	0.424
200	254	156.4	123.4	25.0	4	0.40	0.464

* The possible stroke length for type B are the maximum values for close-linked double blocks.

KR2001 A with One Block and Cover
KR2001 B with Two Blocks and Cover

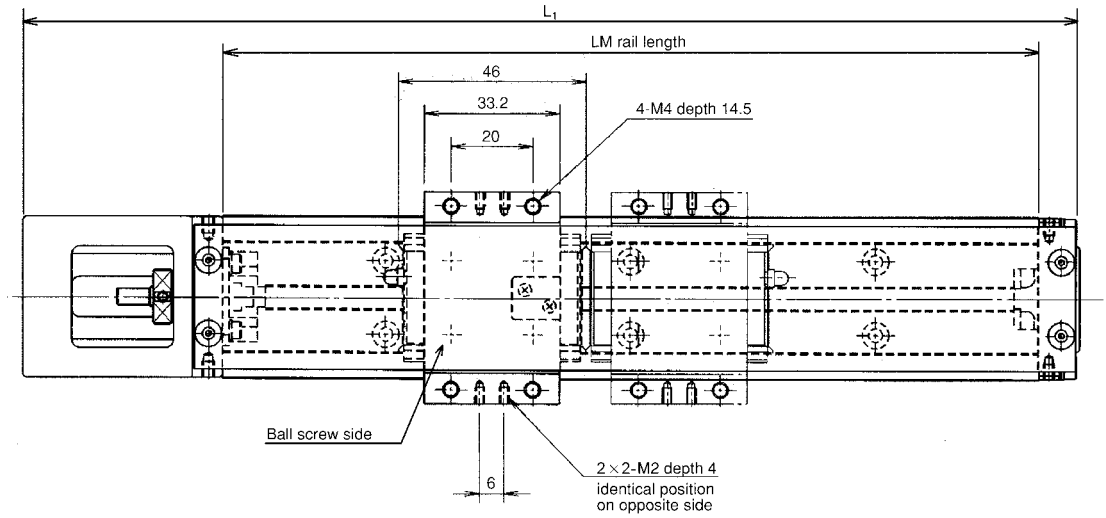

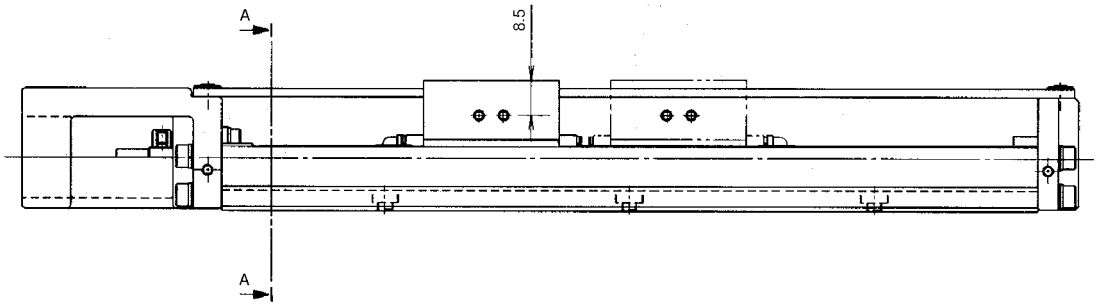

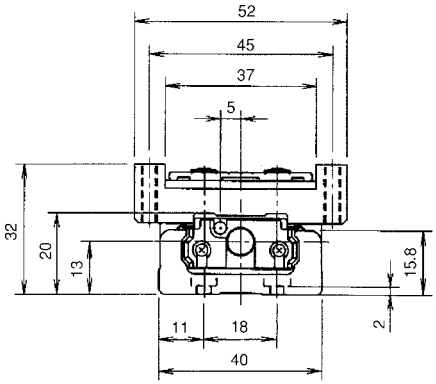

A-A section

Table 25

LM rail length [mm]	Overall length L1 [mm]	Possible stroke length [mm]		Total mass of unit [kg]	
		Type A	Type B*	Type A	Type B
100	159	41.5	—	0.510	—
150	209	91.5	45.5	0.660	0.780
200	259	141.5	95.5	0.800	0.920

* The possible stroke length for type B are the maximum values for close-linked double blocks.

KR2602 A with One Block and Cover
KR2602 B with Two Blocks and Cover

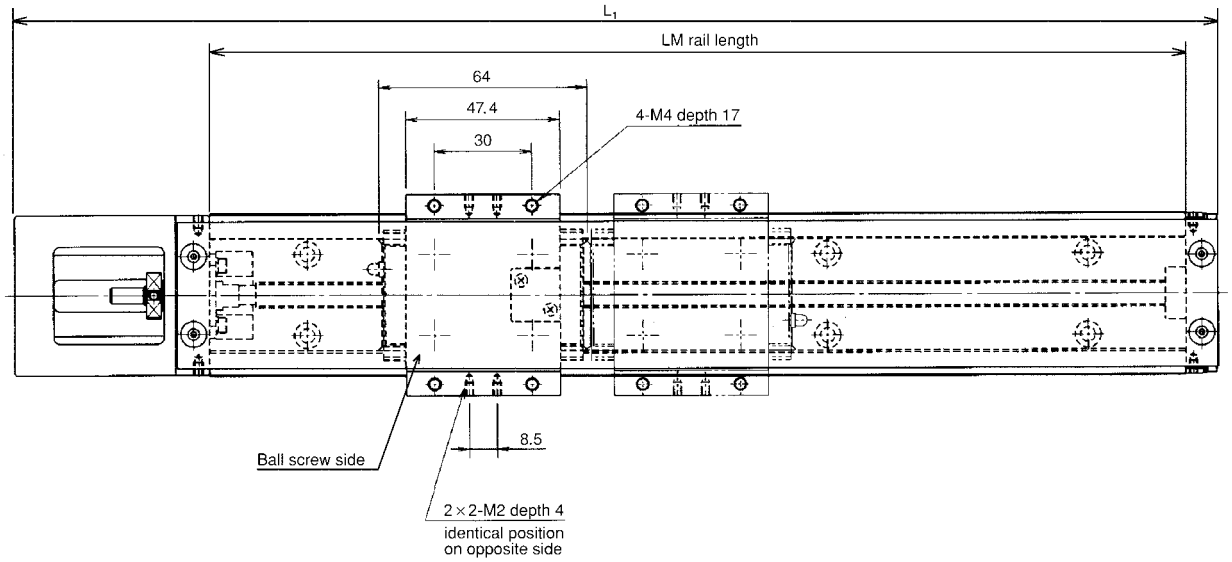

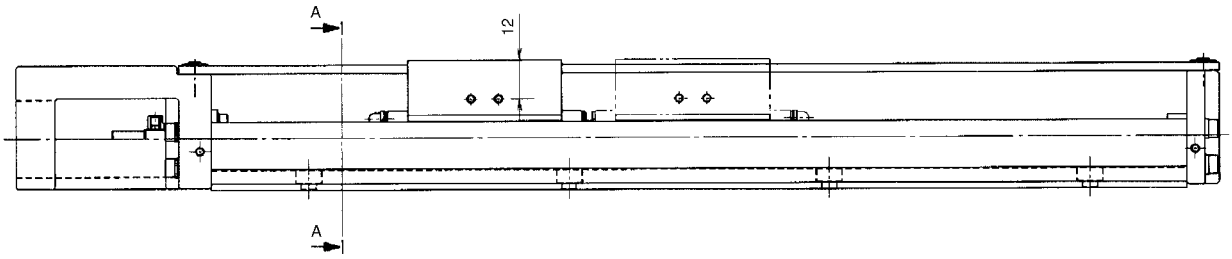

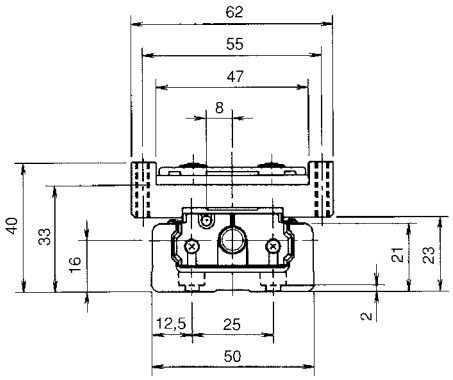

A-A Section

Table 26

LM rail length [mm]	Overall length L1 [mm]	Possible stroke length [mm]		Total mass of unit [kg]	
		Type A	Type B*	Type A	Type B
150	220	69	—	1.120	—
200	270	119	55	1.340	1.605
250	320	169	105	1.560	1.825
300	370	219	155	1.780	2.045

* The possible stroke length for type B are the maximum values for close-linked double blocks.

KR30H A with One Long Block and Cover
KR30H B with Two Long Blocks and Cover

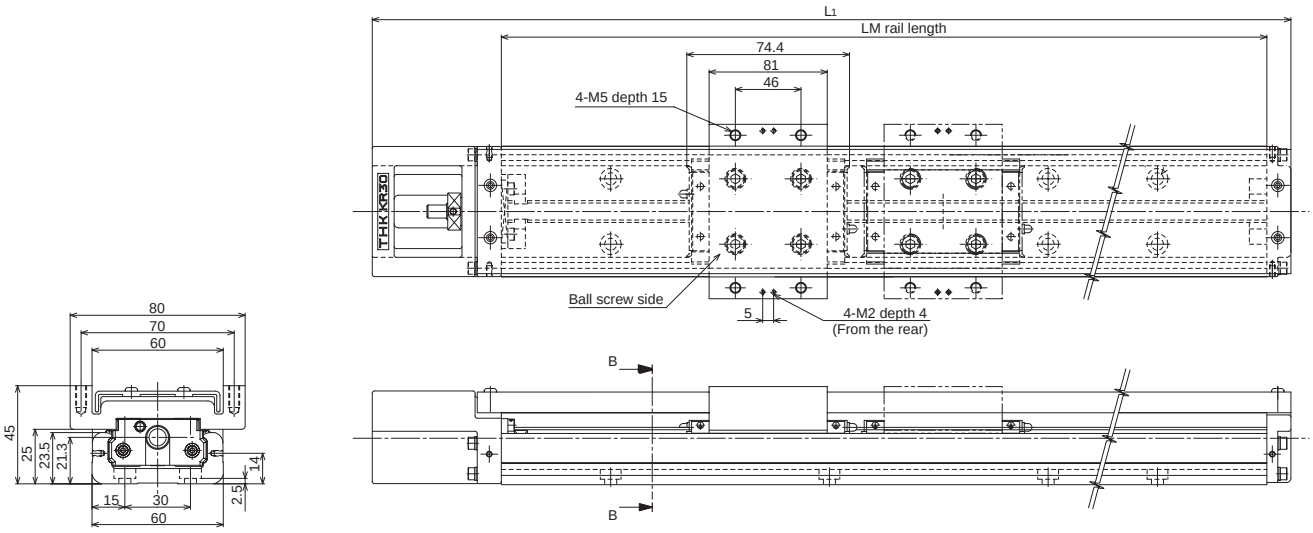

B-B section

KR30H C with One Short Block and Cover
KR30H D with Two Short Blocks and Cover

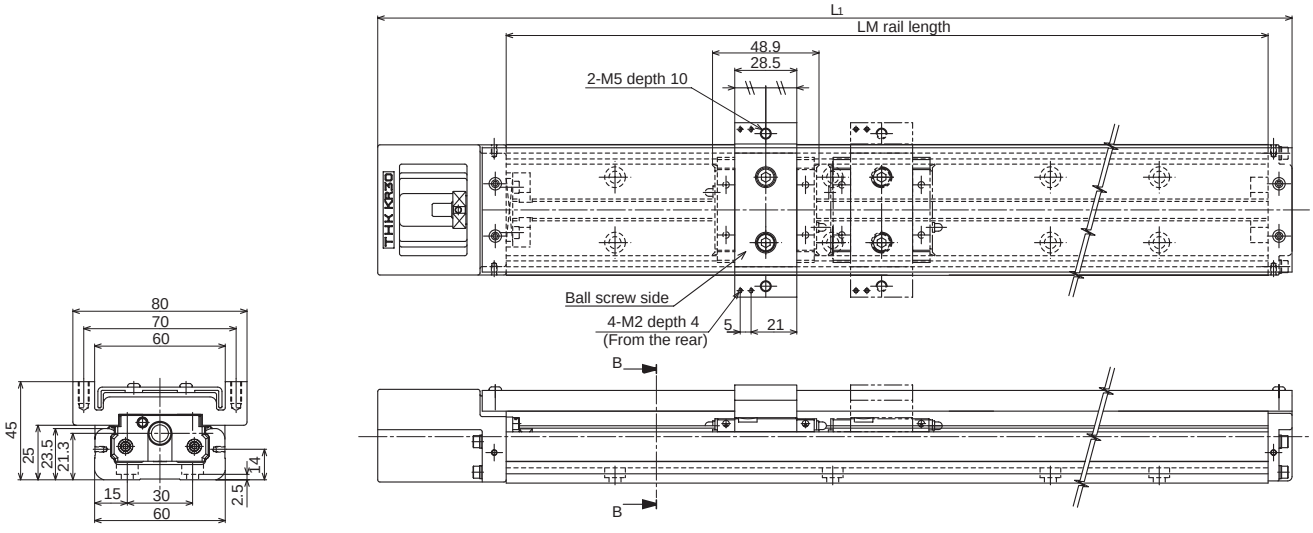

B-B section

Table 27

LM rail length [mm]	Overall length L1 [mm]	Possible stroke length [mm]				Total mass of unit [kg]			
		Type A	Type B*	Type C	Type D*	A-Typ	B-Typ	C-Typ	D-Typ
150	220	58.8	—	84.3	35.4	1,60	—	1,40	1,64
200	270	108.8	—	134.3	85.4	1,80	—	1,60	1,84
300	370	208.8	134.4	234.3	185.4	2,40	2,83	2,20	2,44
400	470	308.8	234.4	334.3	285.4	3,00	3,43	2,80	3,04
500	570	408.8	334.4	434.3	385.4	3,50	3,93	3,30	3,54
600	670	508.8	434.4	534.3	485.4	4,10	4,53	3,90	4,14

* The possible stroke length for type B, type D are the maximum values for close-linked double blocks.

KR33 A with One Long Block and Cover
KR33 B with Two Long Blocks and Cover

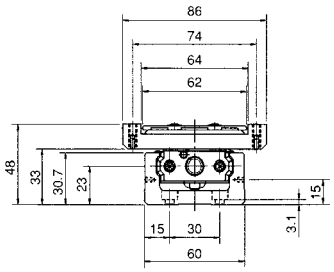

B-B section

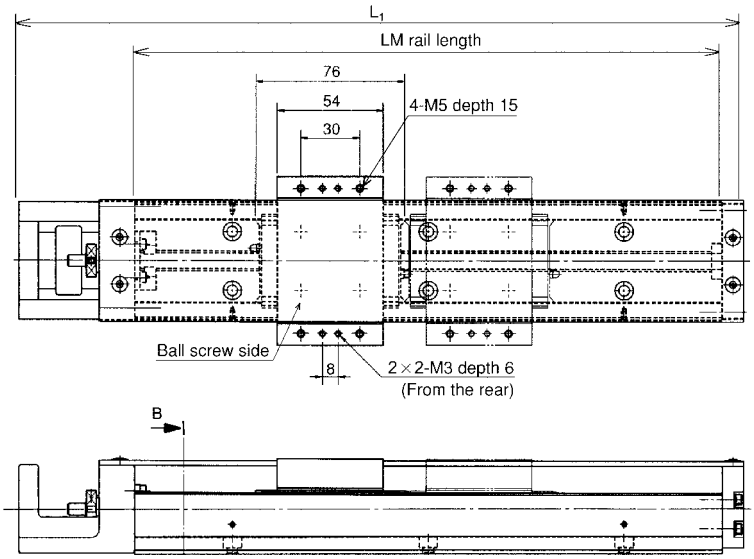

KR33 C with One Short Block and Cover
KR33 D with Two Short Blocks and Cover

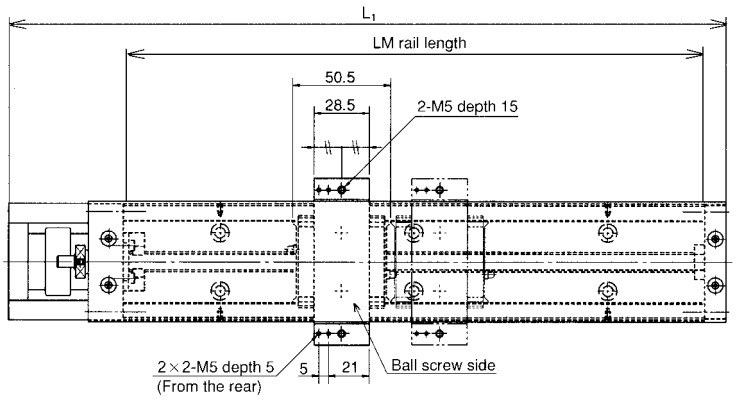

Table 28

LM rail length [mm]	Overall length L1 [mm]	Possible stroke length [mm]				Total mass of unit [kg]			
		Type A	Type B*	Type C	Type D*	Type A	Type B	Type C	Type D
150	220	61.5	—	87	36.5	1.90	—	1.70	2.00
200	270	111.5	—	137	86.5	2.20	—	2.10	2.40
300	370	211.5	135.5	237	186.5	2.80	3.28	2.70	3.00
400	470	311.5	235.5	337	286.5	3.50	3.98	3.30	3.60
500	570	411.5	335.5	437	386.5	4.20	4.68	4.00	4.30
600	670	511.5	435.5	537	486.5	4.80	5.28	4.70	5.00

* The possible stroke length for type B, type D are the maximum values for close-linked double blocks.
The screws for fixing the cover are 0.2 mm above the slider surface.

KR45H A with One Long Block and Cover
KR45H B with Two Long Blocks and Cover

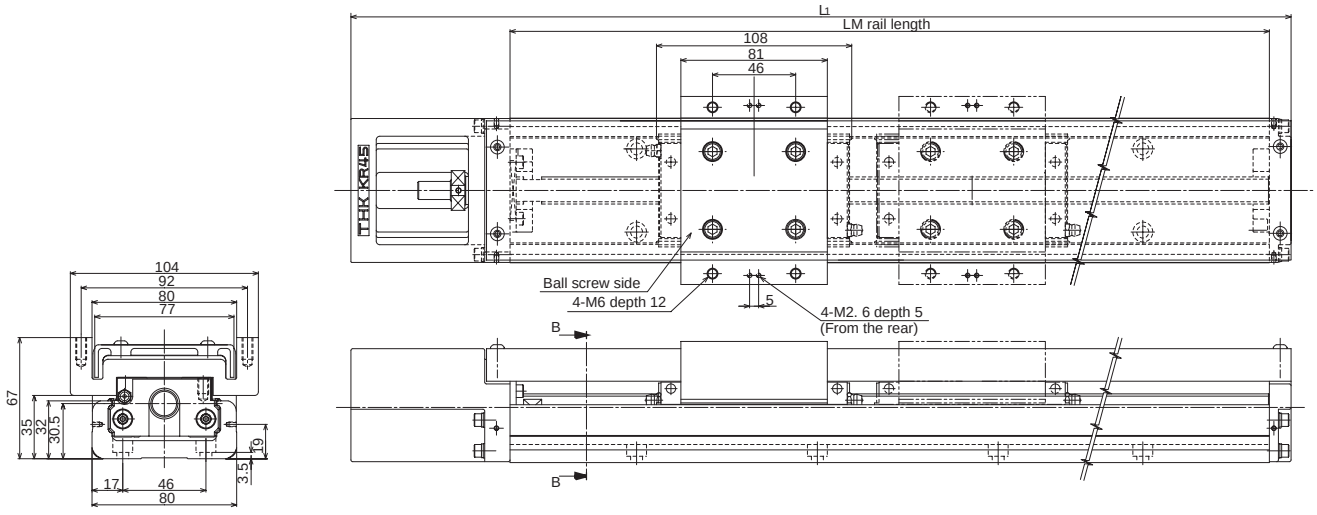

KR45H C with One Short Block and Cover
KR45H D with Two Short Blocks and Cover

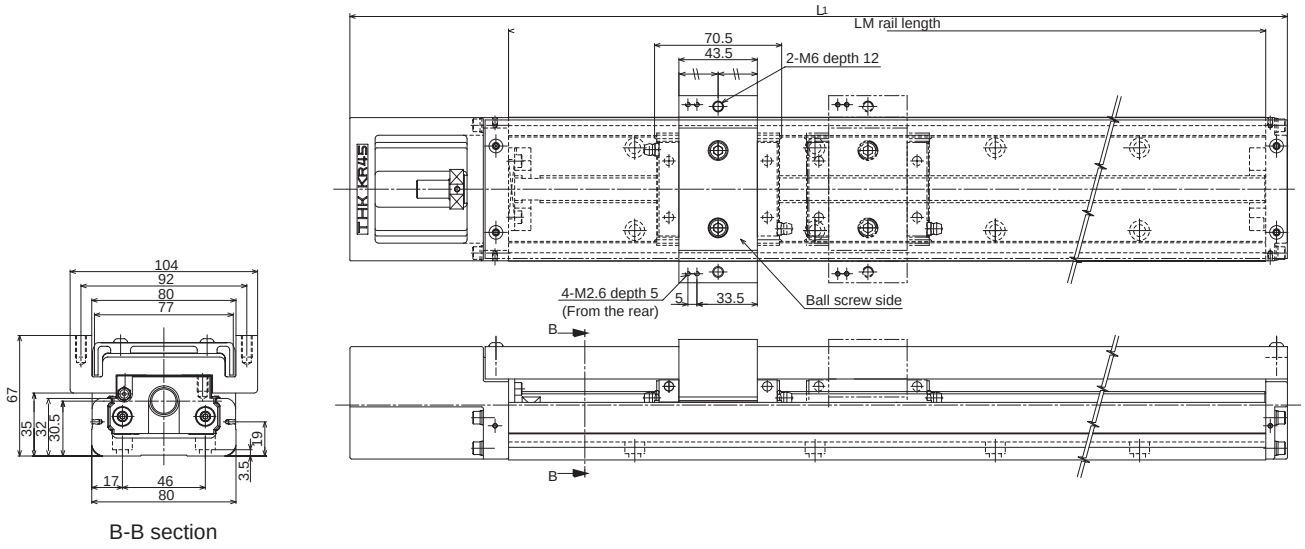

Table 29

LM rail length [mm]	Overall length L1 [mm]	Possible stroke length [mm]				Total mass of unit [kg]			
		Type A	Type B*	Type C	Type D*	Type A	Type B	Type C	Type D
340	440	213	105	250.5	180	5.70	7.01	5.10	5.82
440	540	313	205	350.5	280	6.80	8.11	6.20	6.92
540	640	413	305	450.5	380	7.90	9.21	7.30	8.02
640	740	513	405	550.5	480	9.00	10.31	8.40	9.12
740	840	613	505	650.5	580	10.10	11.41	9.50	10.22
840	940	713	605	750.5	680	11.20	12.51	10.60	11.32
940	1040	813	705	850.5	780	12.30	13.61	11.70	12.42

* The possible stroke length for type B, type D are the maximum values for close-linked double blocks.

KR46 A with One Long Block and Cover
KR46 B with Two Long Blocks and Cover

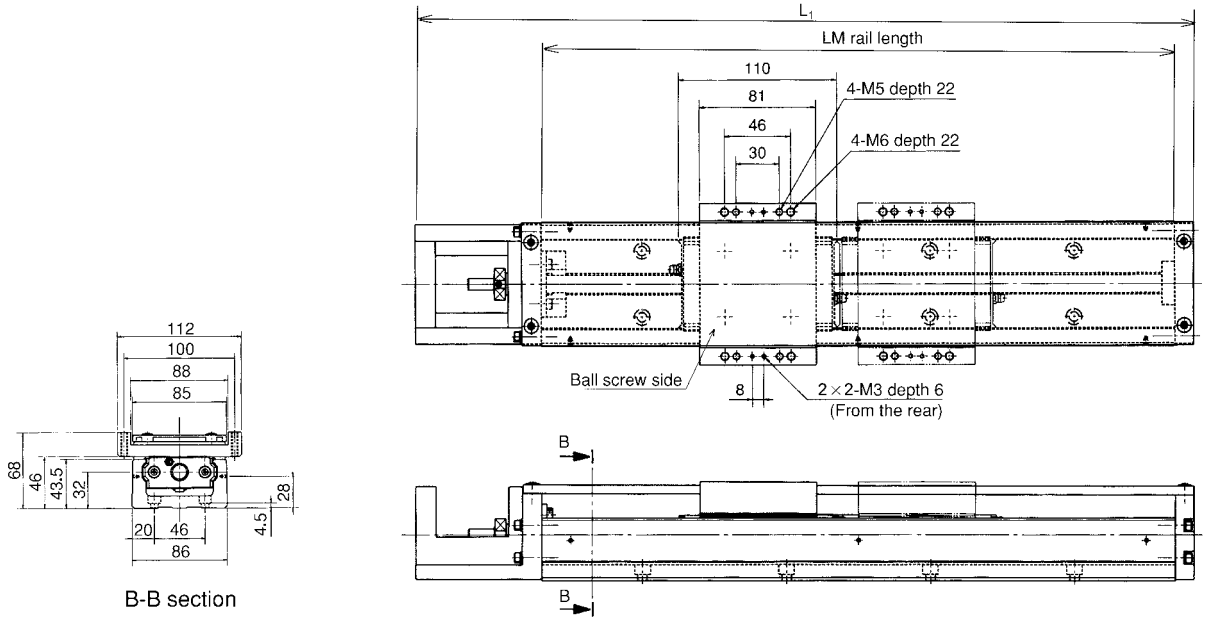

KR46 C with One Short Block and Cover
KR46 D with Two Short Blocks and Cover

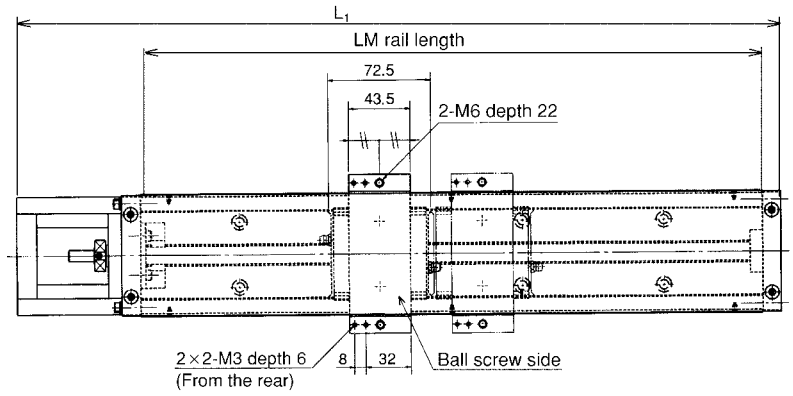

Table 30

LM rail length [mm]	Overall length L1 [mm]	Possible stroke length [mm]				Total mass of unit [kg]			
		Type A	Type B*	Type C	Type D*	Type A	Type B	Type C	Type D
340	440.5	208	98	245.5	173	8.30	9.79	7.80	8,79
440	540.5	308	198	345.5	273	9.70	11.19	9.10	10,09
540	640.5	408	298	445.5	373	11.00	12.49	10.50	11,49
640	740.5	508	398	545.5	473	12.40	13.89	11.90	12,89
740	840.5	608	498	645.5	573	13.70	15.19	13.20	14,19
940	1040.5	808	698	845.5	773	16.30	17.79	15.80	16,79

* The possible stroke length for type B, type D are the maximum values for close-linked double blocks.

KR5520 A with One Block and Cover
KR5520 B with Two Blocks and Cover

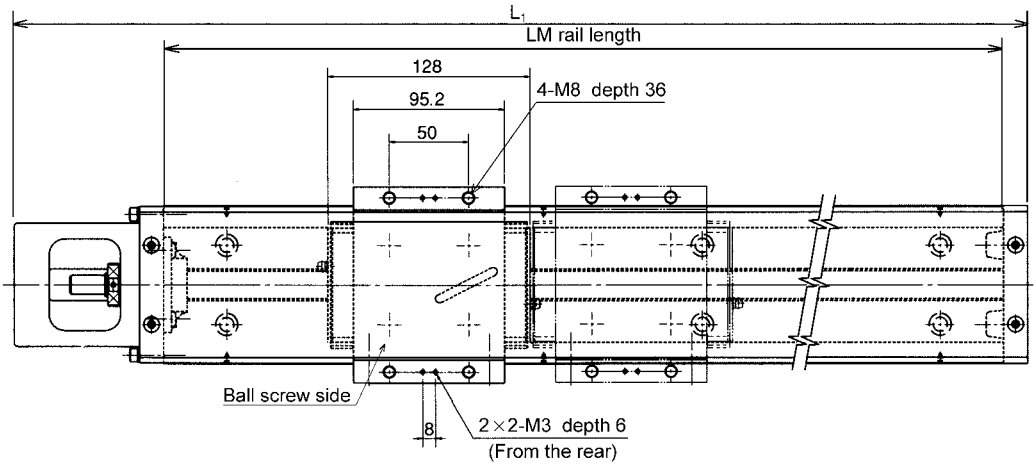

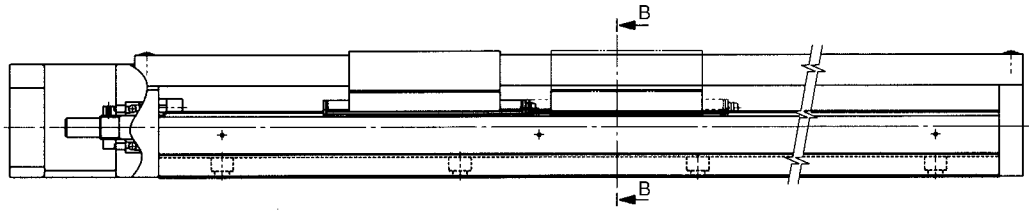

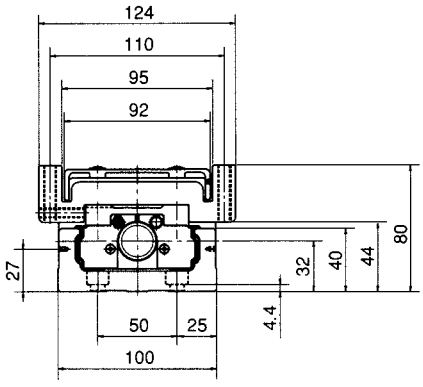

B-B section

Tab. 31

LM rail length [mm]	Overall length L1 [mm]	Possible stroke length [mm]		Total mass of unit [kg]	
		Type A	Type B*	Type A	Type B
980	1089	826	698	22.70	26.20
1080	1189	926	798	24.60	28.10
1180	1289	1026	898	26.40	29.90
1280	1389	1126	998	28.10	31.60
1380	1489	1226	1098	30.00	33.50

* The possible stroke length for type B is the maximum value for close-linked double blocks.

KR6525 A with One Block and Cover
KR6525 B with Two Blocks and Cover

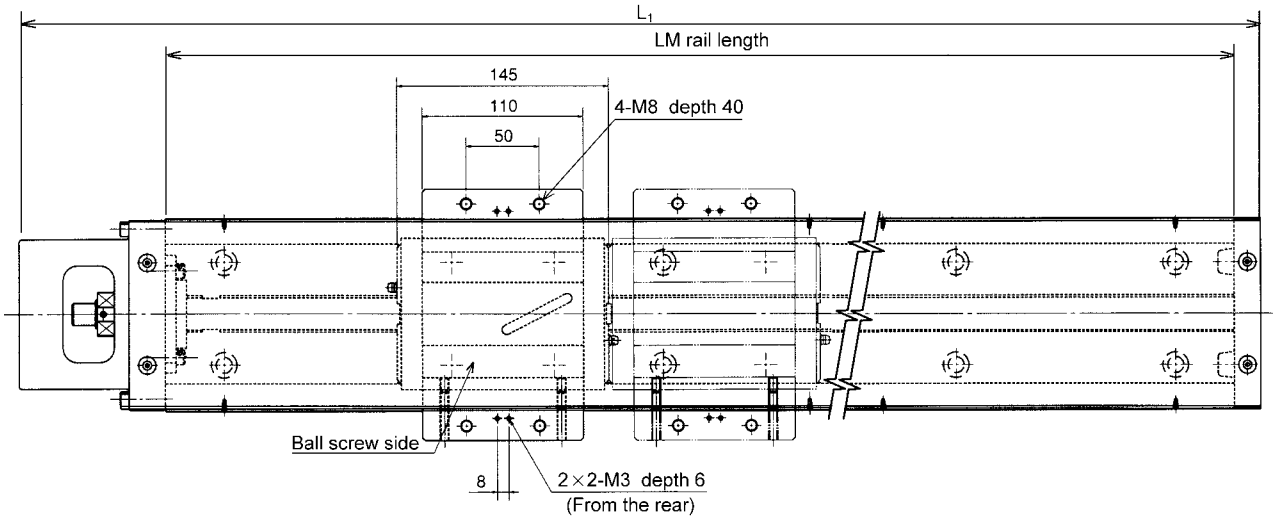

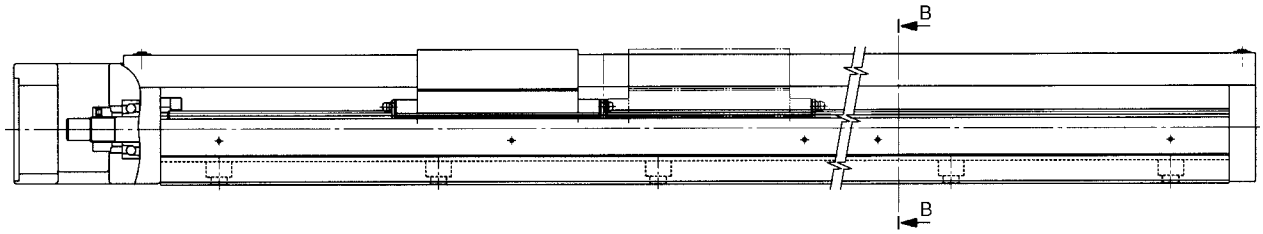

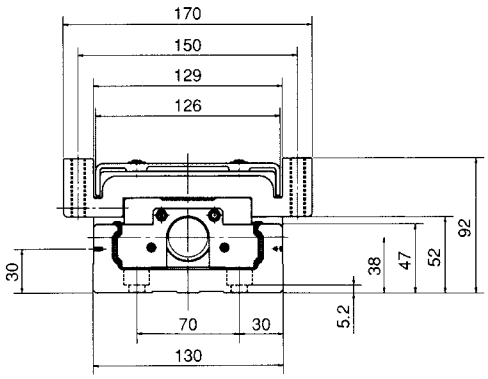

B-B section

Table 32

LM rail length [mm]	Overall length L1 [mm]	Possible stroke length [mm]		Total mass of unit [kg]	
		Type A	Type B*	Type A	Type B
980	1098	810	665	36.30	43.00
1180	1298	1010	865	42.00	48.70
1380	1498	1210	1065	47.60	54.30
1680	1798	1510	1365	56.10	62.80

* The possible stroke length for type B is the maximum value for close-linked double blocks.

KR20 / 26 A with One Block and Bellow
KR20 / 26 A with Two Blocks and Bellow

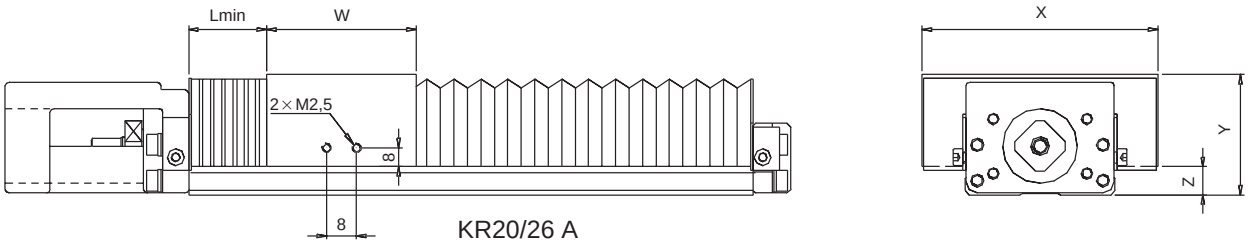

KR20/26 A

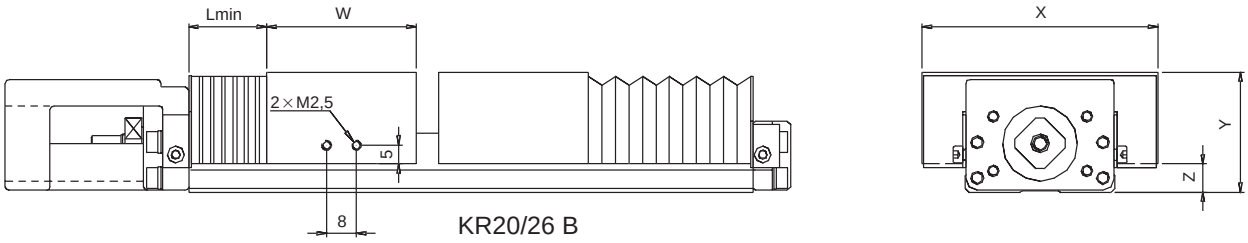

KR20/26 B

Table 33 Unit: mm

	Length	Stroke length with bellow	Lmin	W	X	Y	Z
KR20A	100	35	13	40	63	32	16(1) 7,5(2)
	150	70	20				
	200	110	25				
KR20B	150	35	13				
	200	70	20				
KR26A	150	60	15	58	74	40	18
	200	100	20				
	250	130	25				
	300	180	30				
KR26B	200	45	15				
	250	85	20				
	300	120	30				

(1)For KR20 with sensor rail
(2)For KR20 without sensor rail

KR33 A with One Long Block and Bellow
KR33 B with Two Long Blocks and Bellow
KR33 C with One Short Block and Bellow
KR33 D with Two Short Blocks and Bellow

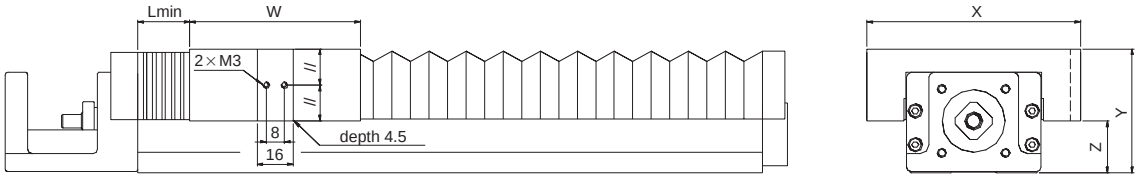

KR33A/C

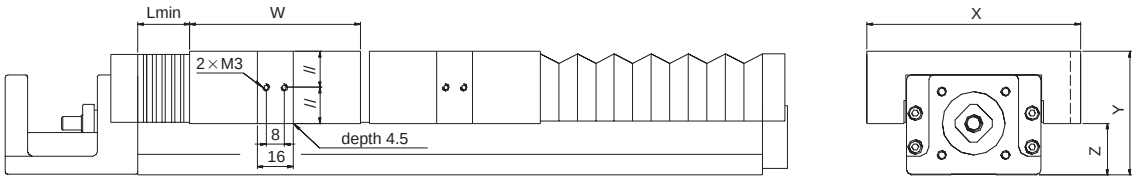

KR33B/D

Table 34 Unit: mm

	Length	Stroke length with bellow	Lmin	W	X	Y	Z
KR33A	150	50	10	76	95	55	23
	200	90	20				
	300	170	30				
	400	250	35				
	500	330	45				
	600	410	55				
KR33B	200	30	15				
	300	110	25				
	400	190	35				
	500	270	45				
	600	350	55				
KR33C	150	70	10	48	95	55	23
	200	110	15				
	300	190	25				
	400	270	35				
	500	350	45				
	600	430	55				
KR33D	150	30	10				
	200	70	15				
	300	150	20				
	400	230	30				
	500	310	40				
	600	390	50				

KR46 A with One Long Block and Bellow
KR46 B with Two Long Blocks and Bellow
KR46 C with One Short Block and Bellow
KR46 D with Two Short Blocks and Bellow

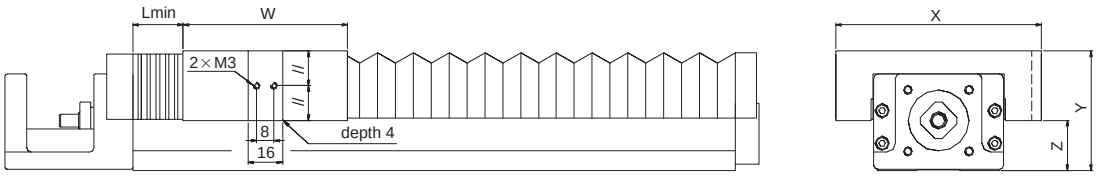

KR46A/C

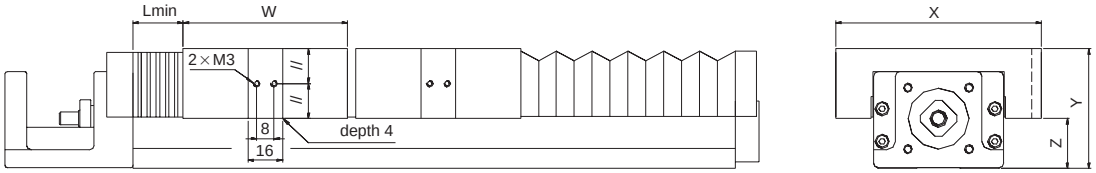

KR46B/D

Table 35 Unit: mm

	Length	Stroke length with bellow	Lmin	W	X	Y	Z
KR46A	340	175	25	106	120	68	34
	440	255	35				
	540	335	45				
	640	415	55				
	740	495	65				
	940	655	85				
KR46B	340	90	15				
	440	170	25				
	540	250	35				
	640	330	45				
	740	410	55				
	940	570	75				
KR46C	340	205	30	68,5	120	68	34
	440	285	40				
	540	365	50				
	640	445	60				
	740	525	70				
	940	685	90				
KR46D	340	150	20				
	440	230	30				
	540	310	40				
	640	390	50				
	740	470	60				
	940	630	80				

KR55 / 65 A with One Block and Bellow
KR55 / 65 A with Two Blocks and Bellow

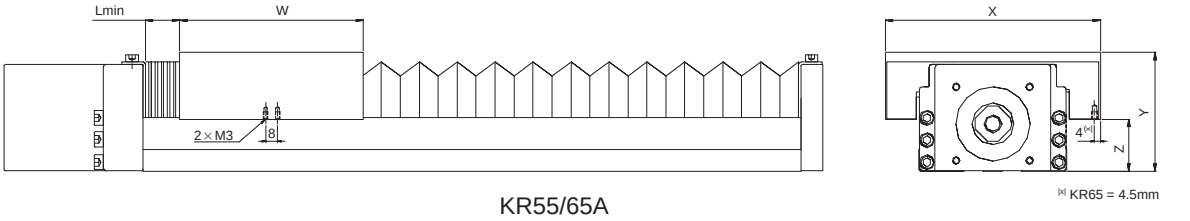

[x] KR65 = 4.5mm

KR55/65A

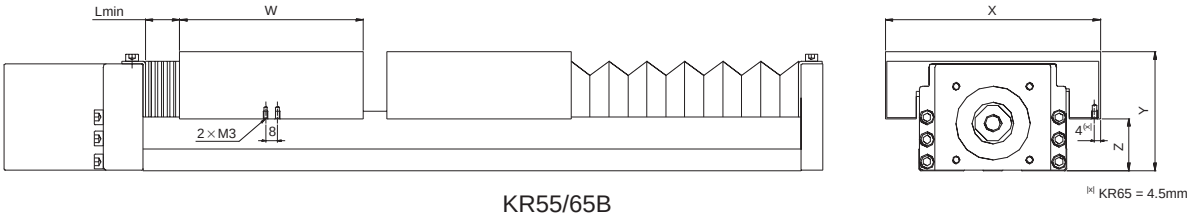

[x] KR65 = 4.5mm

KR55/65B

Table 36 Unit: mm

	Length	Stroke length with bellow	Lmin	W	X	Y	Z
KR55A	980	690	85	124	145	80	35
	1080	770	95				
	1180	850	105				
	1280	930	110				
	1380	1010	120				
KR55B	980	580	75				
	1080	660	85				
	1180	740	95				
	1280	825	105				
	1380	905	110				
KR65A	980	670	85	140	175	92	37
	1180	830	105				
	1380	990	120				
	1680	1240	150				
KR65B	980	550	70				
	1180	710	85				
	1380	875	105				
	1680	1120	135				

Sensor

Sensor rail

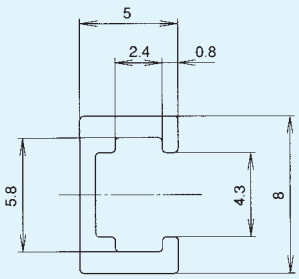

Proximity sensor TL-W3M _ _ (Omron)

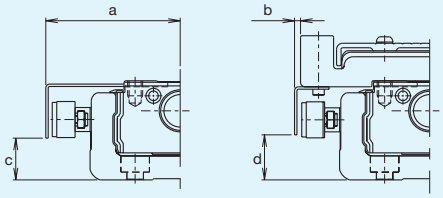

Unit: mm

Model No.	a	b	c	d
KR20	33.5	7.5	5	5
KR26	38.5	7.5	6	6
KR33	43.5	0.5	10	10
KR46	56.5	0.5	23	23
KR55	63.5	1.5	22	22
KR65	78.5	-6.5	25	25

Proximity sensor APM-D3 (Yamatake)

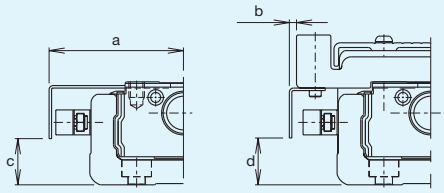

Unit: mm

Model No.	a	b	c	d
KR15	27.8	-5.8	1.4	1.4
KR20	32.5	6.6	6	6
KR26	37.5	6.4	8	8
KR30H	43.3	3.3	8.8	9
KR33	42.5	-0.6	8.8	9
KR45H	53.2	1.2	14	14
KR46	55.4	-0.6	21.8	22
KR55	62.4	0.4	22	22
KR65	77.4	-7.5	25.1	25

Proximity sensor GL-12F (SUNX) and GXL-N12F (SUNX)

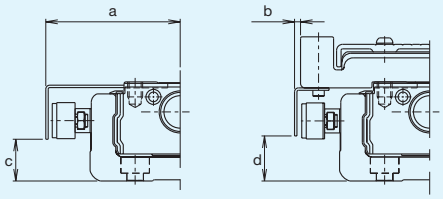

Unit: mm

Model No.	a	b	c	d
KR30H	45.0	5	8.8	9
KR33	44.5	1.5	8.8	9
KR45H	54.8	2.8	13.8	14
KR46	57.4	1.5	21.8	22
KR55	63.5	1.5	22	22
KR65	79	-6	25.1	25

Photosensor EE-SX671 (Omron)

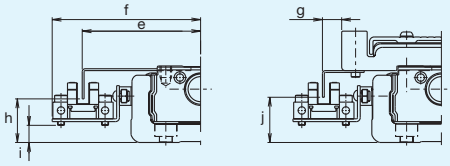

Unit: mm

Model No.	e	f	g	h	i	j
KR30H	51.3	64.3	11.3	13.8	1.4	13.5
KR33	50.8	63.7	7.8	12.8	1.6	13
KR45H	61.2	74.2	9.3	18.3	6.4	18.5
KR46	63.6	76.6	7.6	25.8	14.6	26
KR55	70.7	83.5	8.6	24.5	13.6	25
KR65	85.5	98.5	0.6	28.1	16.6	28

Photosensor EE-SX674 (Omron)

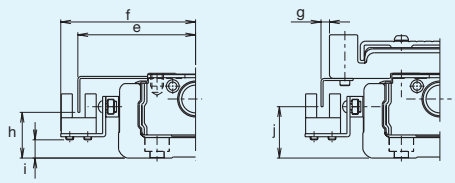

Unit: mm

Model No.	e	f	g	h	i	j
KR30H	46.2	52.8	6.3	13.8	1.1	14
KR33	43.9	50.3	0.9	12.8	1.6	13
KR45H	56.2	62.7	4.2	19	6.1	19
KR46	56.7	63.2	0.7	25.8	14.6	26
KR55	63.8	70.1	1.8	24.5	13.6	25
KR65	78.8	85.1	-6.2	28.1	16.6	28

Inductive Proximity Sensor TL-W3M□□(OMRON)

Space Saving Flat Proximity Switch

- All models provided with an operation indicator.
- Mounting possible from either the front or rear of the housing.
- Protected to endure water and oil splashes (conforms to IEC IP67).



Order Information

Sensing distance	Output			
	PNP		NPN	
	NO	NC	NO	NC
3 mm	TL-W3MB1	TL-W3MB2	TL-W3MC1	TL-W3MC2

Specifications

Type	TL-W3M
Sensing distance	3 mm ± 10 %
Supply voltage (operating voltage range)	10 to 30 VDC, ripple (p-p): 10 % max.
Current consumption (leakage current)	15 mA max. at 24 VDC
Sensing object	Magnetic metals
Differntial travel	10 % max. of sensing distance
Response frequency	600 Hz
Control output	NPN or PNP open collector, 100 mA max.
Circuit protection	Reverse connection protection
Display	Operating mode (red LED)
Ambient temperature	Operating: -25°C to 70°C (with no icing)
Ambient humidity	Operating: 35% to 95%
Temperature influence	± 10% max. of sensing distance at 23°C in temperature range of -25°C to 70°C
Voltage influence	± 2,5% max. of sensing distance in rated voltage range ±10%
Residual voltage	1,0 V max. (with 100 mA load current and 2-m cable)

Output circuits

TL-W3MB□

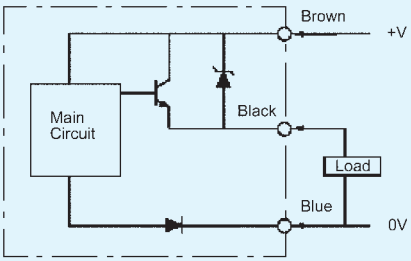

TL-W3MC□

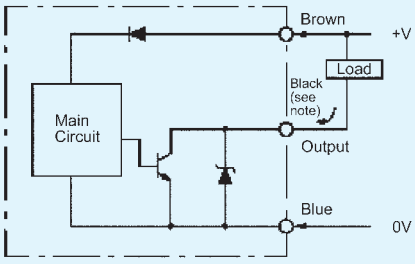

Timing Chart

TL-W3M□

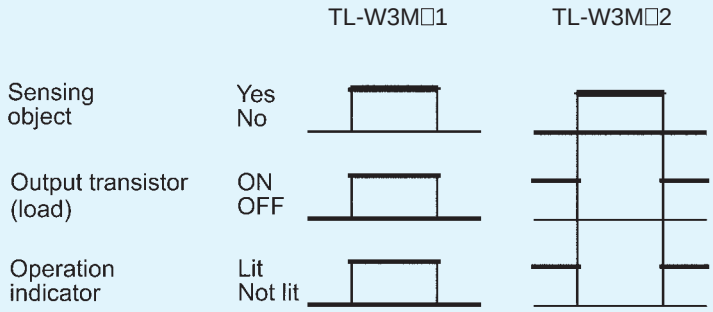

Dimensions [mm]

TL-W3M

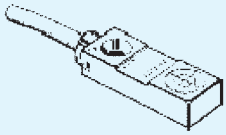

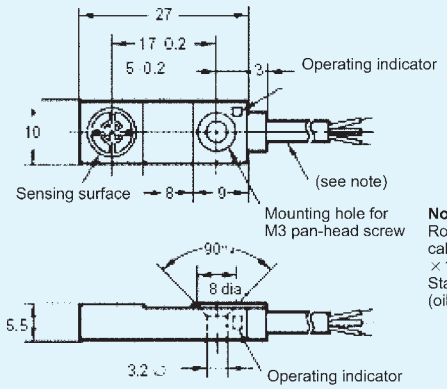

Note:
Round vinyl-insulated cable (2.9 dia., 0.12 dia. × 12, 3 cores)
Standard length: 2m (oil-tight)

XY Bracket

The brackets required to mount LM Guide Actuator KR have been standardized. Made of aluminium, the brackets are lightweight in order to minimize inertia.

Besides these standardized brackets customized brackets can be delivered as well.

KR-008XS
(KR33 for a single-axis)

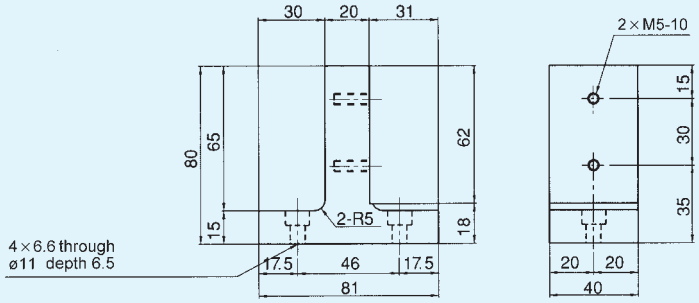

KR-008XL
(KR46 for a single-axis)

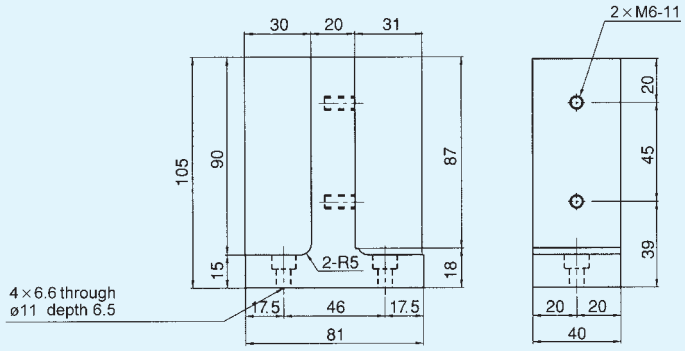

KR-003XS
(KR33 for fastening a rail)

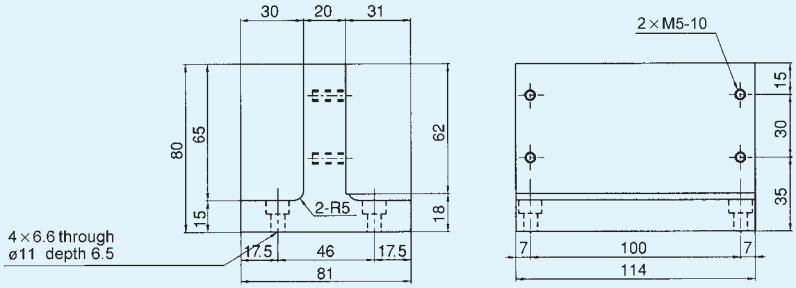

KR-003XL
(KR46 for fastening a rail)

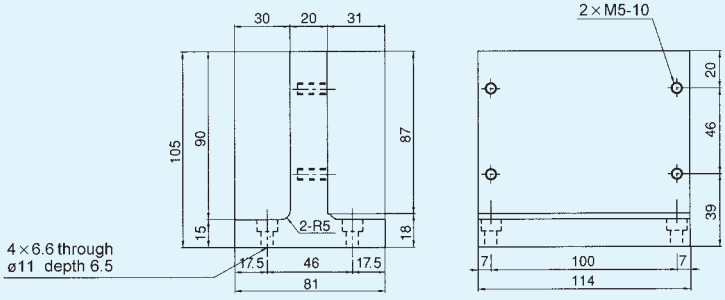

KR-002XS
(KR33 for fastening the slider)

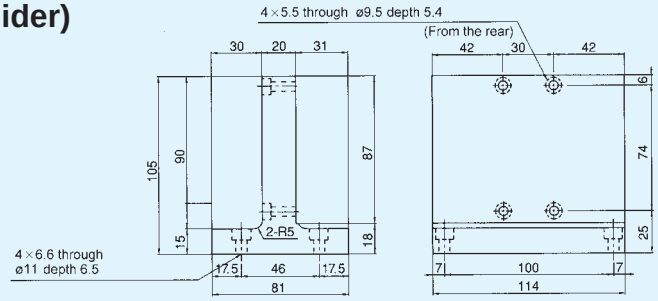

Sample combination

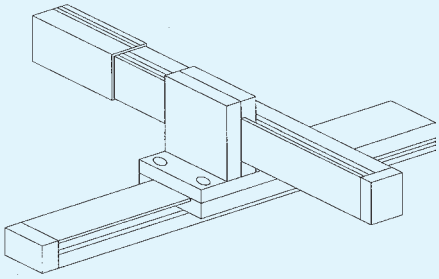

For fastening the slider

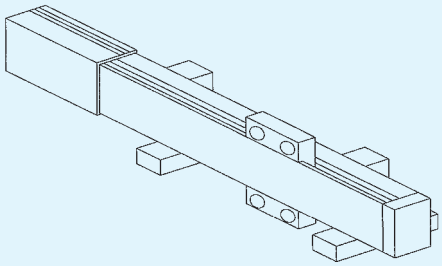

For one-axis mode

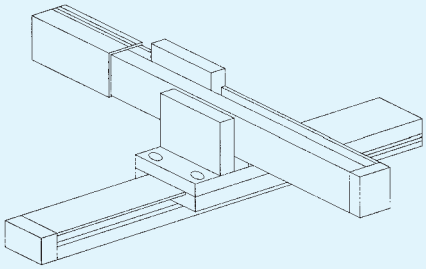

For fastening the rail

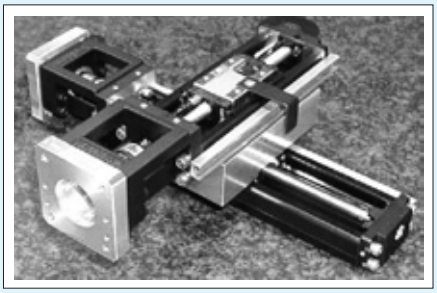

Customized solution

Customized LM Guide Actuators

Please don't hesitate to contact THK, if your application requires adjustment of the standard LM Guide Actuator. THK has an extensive experience in achieving customized solutions.

Motor Adapter

Motor

The LM Guide Actuator KR can be provided with a motor adapter. In this case please indicate the name of the motor manufacturer together with the type number and the fitting dimensions. - Please take into consideration the dimensions of the connecting constructions because the dimesions of the motor can be bigger than the dimensions of the LM Guide Actuator.

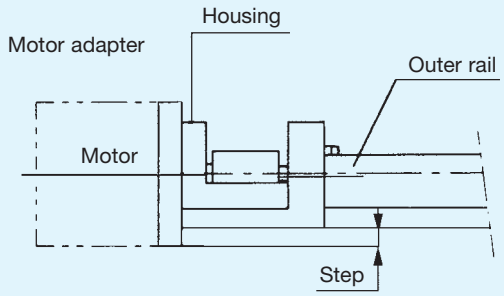

Fig. 19 Motor-Connection

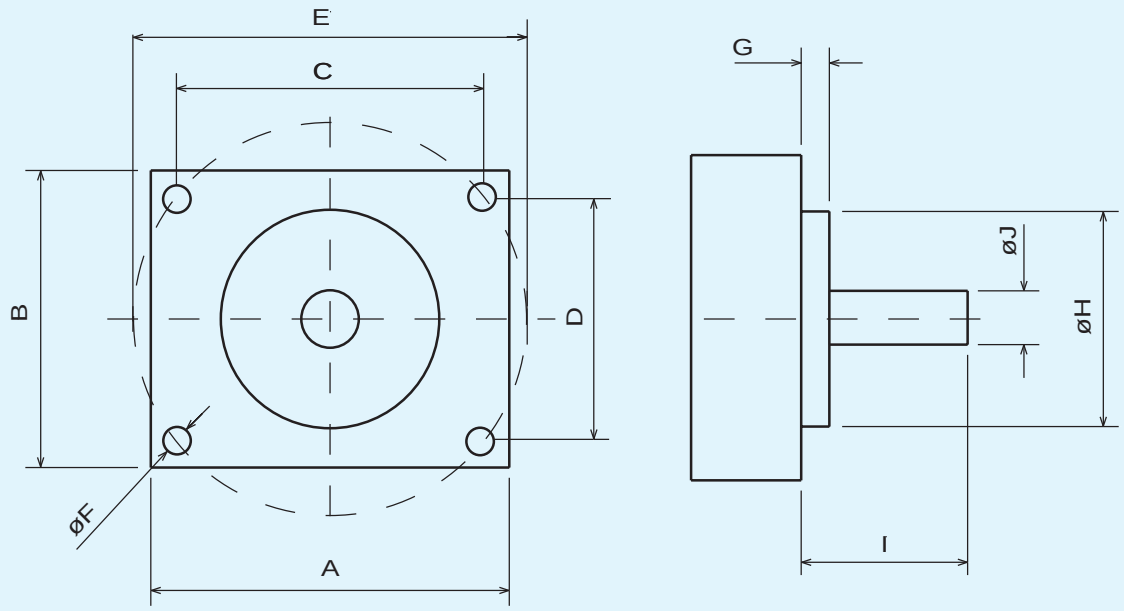

Please complete this form with your specifications:

Unit: mm

Motor mounting surface A × B	Position of mounting holes C × D	Reference diameter E	Mounting hole diameter F	Shoulder thickness G	Shoulder diameter H	Pivot length incl. shoulder I	Pivot diameter J

Couplings – Model MK 1 –

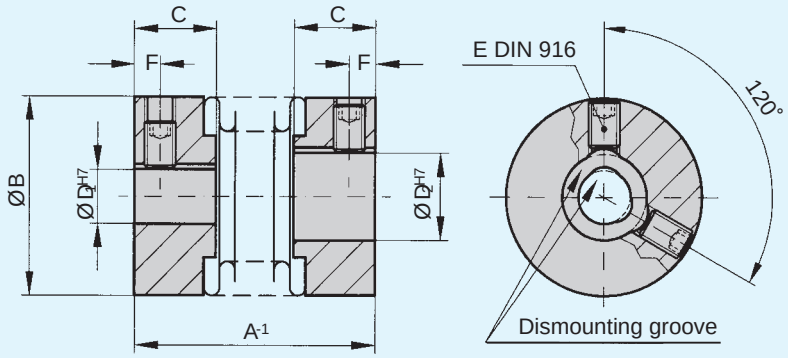

Material:
Bellows are made of highly flexible high-grade stainless steel, hubs from aluminium.

Design:
Hubs with DIN 916 radial set screw and **integral dismounting groove.**

Properties

- low-cost design
- backlash-free and torsionally rigid
- low moment of inertia
- compensates for 3-axis of misalignment
- a mounting groove or flattering off of the shaft is not required due to the integrated dismounting groove

common solutions :

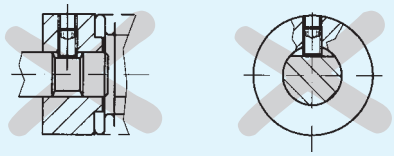

Technical specifications

Series	Rated torque [Nm]	Overall length [mm]	Outer diameter [mm]	Fit length of hub [mm]	Special bores from Ø to Ø [mm]	Standard bore H7 [mm]	Clamping screws DIN 916 [mm]	Distance [mm]	Mass moment of inertia [gcm²]	Weight [g]	Torsional stiffness [Nm/rad]	axial [mm]	lateral [mm]	angular [degrees]
	T_{KN}	A	B	C	$D_{1/2}$	$D_{1/2}$	E	F	J_{ges}		C_T	max. Values		
0.5	0.05	14	6.5	4	1-3	2	1xM2	1.5	0.1	1	50	0.4	0.1	1
1	0,1	20	10	5	1-5	3	1xM2.5	1.8	0.4	5	70	0.4	0.15	1
5	0.5	20	15	6.5	3-9	6	1xM3	2	1.1	6	280	0.4	0.15	1
		23							1.2	6	210	0.5	0.2	1.5
		26							1.3	6	170	0.6	0.25	2
10	1.0	22	15	6.5	3-9	6	1xM3	2	1.3	6	510	0.4	0.15	1
		25							1.8	7	380	0.5	0.2	1.5
		28							2	8	320	0.6	0.25	2
15	1.5	24	19	7.5	3-12	6/10	2xM3	2	4.7	12	750	0.5	0.15	1.5
		29							5.5	14	700	0.7	0.2	1.5
20	2.0	26	25	11	3-16	6/10	2xM4	2.5	15	22	1200	0.5	0.15	1.5
		31							18	24	1300	0.6	0.2	1.5
		35							20	26	1200	0.7	0.25	2
45	4.5	37	32	13	6-22	10	2xM5	3.5	65	54	7000	0.7	0.2	1.5
		45							70	58	5000	1	0.25	2
100	10	43	40	15	6-28	10	2xM6	4	180	106	9050	1	0.2	1.5
		53							220	114	8800	1.2	0.3	2

Integral dismounting groove from bore diameter 4 mm and larger.

1 Nm = 8.85 lbs

Temperature range: -30 bis +100°C (3,6 F to 237 F), peaks up to 120°C (270 F).

Speeds: Up to 20,000 rpm, in excess of 20,000 rpm with balanced version.

Backlash: Absolutely backlash-free due to frictional clamp connection.

Tolerance: On the hub/shaft connection 0.01 bis 0.08 mm.

Service life: These coupling have an infinite life, and are maintenance-free if the technical limits are not exceeded.

Non-standard design applications: Custom designs with varied tolerances, keyways, non-standard material and bellows are available upon request.

Ordering example:

MK1 / 5 / 26 / 4 / 5 / xx

- Non standard
- Ø D2 H7
- Ø D1 H7
- Overall length
- Series / Nm
- Model

Couplings – Model MK 2 –

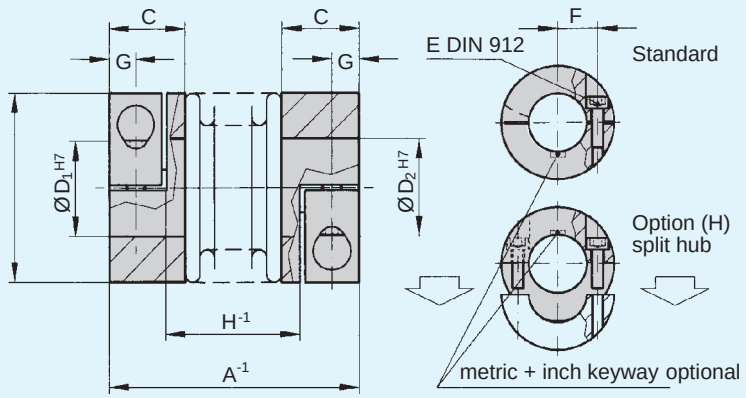

Material:
Bellows are made of highly flexible high-grade stainless steel, hubs from aluminium

Design:
With a single radial clamping screw per hub DIN 912.

Properties

- frictional connection utilizing clamping hubs
- for high dynamic applications
- backlash-free and torsionally rigid
- low moment of inertia
- compensates for 3-axis of misalignment

Technical specifications

Series	Rates torque [Nm]	Overall length [mm]	Outer diameter [mm]	Fit length of hub [mm]	Special bores from ø to ø [mm]	Standard bore H7 [mm]	Screws DIN 912 [mm]	Distance between centers [mm]	Distance [mm]	Distance [mm]	Mass moment of inertia [gcm²]	Weight [g]	Torsional stiffness [Nm/rad]			
	T_{KN}	A	B	C	$D_{1/2}$	$D_{1/2}$	E	F	G	H	J_{ges}		C_T	Max. Values		
														axial	lateral [mm]	angular [mm] [degrees]
5	0.5	25	15	9	3-7	6	M2	4.5	3	12	2.6	9	280	0.4	0.15	1
		28								15	2.8	9	210	0.5	0.2	1.5
		31								18	3	9	170	0.6	0.25	1
10	1.0	27	15	9	3-7	6	M2	4.5	3	14	3	9	510	0.4	0.15	1
		30								17	3.4	10	380	0.5	0.2	1.5
		33								20	3.6	11	320	0.6	0.25	2
15	1.5	30	19	11	3-8	6	M2,5	6	3.5	14.5	8.5	22	750	0.5	0.15	1.5
		35								19.5	9.5	24	700	0.7	0.2	1.5
20	2.0	35	25	13	3-12.7	6/10	M3	8	4	17	25	36	1200	0.5	0.15	1.5
		40								22	27	38	1300	0.6	0.2	1.5
		44								26	29	40	1200	0.7	0.25	2
45	4.5	46	32	16	5-16	10	M4	10	5	23.5	100	74	7000	0.7	0.2	1.5
		54								31.5	108	78	5000	1	0.25	2
100	10	50	40	16	5-24	10	M4	15	5	27.5	160	120	9050	1	0.2	1.5
		60								37.5	205	130	8800	1.2	0.3	2

1 Nm = 8.85 in lbs

Temperature range: -30 bis +120°C (3,6 F to 237 F), peaks up to 120°C (270 F).

Speeds: Up to 10,000 rpm, in excess of 10,000 rpm with balanced version.

Backlash: Absolutely backlash-free due to frictional clamp connection.

Tolerance: On the hub/shaft connection 0.01 bis 0.05 mm.

Service life: These coupling have an infinite life, and are maintenance-free if the technical limits are not exceeded.

Non-standard design applications: Custom designs with varied tolerances, keyways, non-standard material and bellows are available upon request.

Ordering example:

MK2 / 5 / 25 / H / 4 / 5 / xx

- MK2 / 5 — Model
- 25 — Series / Nm
- H — Overall length
- 4 — Split hub (optional)
- 5 — Ø D1H7
- xx — Ø D2H7 / Non standard

Datasheet LM Guide Actuator KR

Contact person _____ **Date** _____

Company _____

ref. to _____

Street _____ **Phone** _____

Zip / City _____ **Fax** _____

Description of the application:

_____

_____

_____

_____

Axis		X	Y	Z
Position (horizontal, vertical, across)				
Stroke length	mm			
max. Velocity	m/s			
max. Acceleration	m/s^2			
Conveyed mass	kg			
Axial load	N			
Positioning	mm			
Positioning accuracy reproducibility	mm			

Please add a sketch if possible:

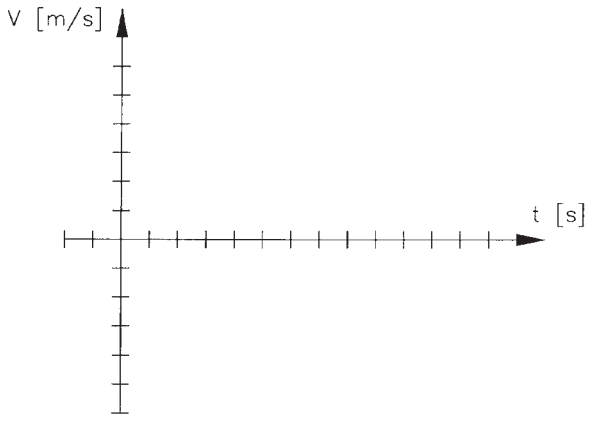

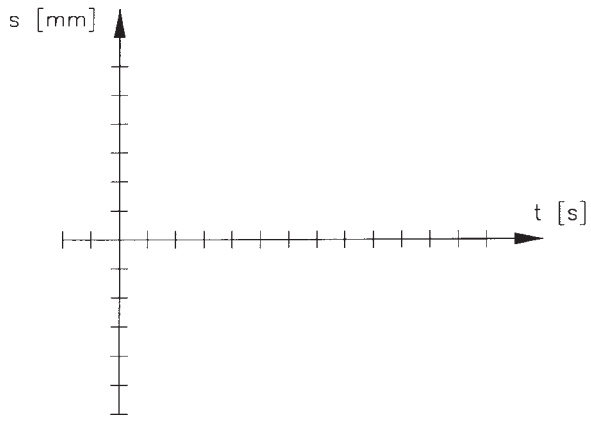

Please offer the following options:

- Cover (with a bellow)
- Cover (with sheet metal)

- Inductive proximity sensor
- Photosensor
- Sensor rail, Sensor bracket

- Motor adapter with fitting dimensions
- Clutch

Precautions on Use

• Handling

Do not drop the product or subject it to impact, as doing so may damage it. Therefore, great care should be exercised in its handling.

Unauthorized disassembly of the product could lead to contamination by foreign matter and impair the precision. Therefore, disassembly should not be performed unless absolutely necessary.

At high rotational speeds, the ballscrew causes resonance due to the characteristic frequency of the screw shaft, which may make operation impossible. The shaft speed should be therefore set at a level below the resonant point (critical speed).

Please consult THK.

• Operating Temperature Range

Do not use this product at 80 °C or higher. If your system requires a temperature of 80 °C or higher, contact THK.

• Lubrication

A certain lubrication is absolutely necessary for the operation of the LM Guide Actuator KR. Otherwise, it will be damaged before it reaches its projected service life. Therefore, please take care about the following points:

- Before operation the anti-corrosion oil must be removed and the LM Guide Actuator KR lubricated.
- The usage of different lubricants must be avoided.
- The lubricant intervals should correspond to the operation necessities and to the environment surroundings.
- When used under special environment, including in locations subject to continual vibration, in a clean room, under a vacuum, and at low or high temperatures, contact THK.

Specifications are subject to change without notice

03/2004 Printed in Belgium

Sales Offices

U.K.

THK U.K.
26 Alston Drive
Bradwell Abbey
Milton Keynes,
MK13 9HA
Tel. (0 19 08) 22 21 59
Fax (0 19 08) 22 21 61
info-mks@thk.co.uk

Austria

THK Austria
Edelmüllerstraße 2
4061 Pasching
Tel. (0 72 29) 51 40-0
Fax (0 72 29) 51 40-0 79
info-lnz@thk.at

France

THK France
Parc des Bruyères
58, Chemin de la Bruyère
69570 Dardilly
Tel. (04) 37 49 14 00
Fax (04) 37 49 14 01
info-lys@thk.fr

Italy

THK Italy
Via Buonarroti, 182
20052 Monza (MI)
Tel. (0 39) 2 84 20 79
Fax (0 39) 2 84 25 27
info-mil@thk-italia.it

THK Bologna
Via della Salute 16/2
40132 Bologna
Tel. (0 51) 6 41 22 11
Fax (0 51) 6 41 22 30
info-blq@thk-italia.it

Germany

THK GmbH
European Headquarters
Düsseldorf Office
Hubert-Wollenberg-Str. 15
40878 Ratingen
Tel. (0 21 02) 74 25-0
Fax (0 21 02) 74 25-29 9
www.thk.de
info@thk.de

Stuttgart Office
Heinrich-Lanz-Str. 3
70825 Korntal-Münchingen
Tel. (0 71 50) 91 99-0
Fax (0 71 50) 91 99-8 88
info-str@thk.de

Munich Office
Max-Planck-Straße 13
85716 Unterschleißheim
Tel. (0 89) 37 06 16-0
Fax (0 89) 37 06 16-26
info-muc@thk.de

Spain

THK Spain
C/Andorra 19 A
08830 San Boi de Llobregat
Tel. (93) 652 5740
Fax (93) 652 5746
info-bcn@thk.de

Sweden

THK Sweden
Saldovägen 2
17562 Järfälla
Tel. (8) 44 57 63 0
Fax (8) 44 57 63 9
info-sto@thk.de

Switzerland

Bachofen-AG
Ackerstraße 42
8610 Uster
Tel. (01) 9 44 11 11
Fax (01) 9 44 12 33
Internet: www.bachofen.ch
e-mail: info@bachofen.ch

USA

THK Chicago
200 East Commerce Drive
Schaumburg, IL. 60173
Tel. (8 47) 3 10-11 11
Fax (8 47) 3 10-12 71
www.thk.com
chicago@thk.com

Canada

THK Canada
130 Matheson Blvd. E., U. 1
Mississauga, Ontario
Canada L4Z 1Y6
Tel. (9 05) 7 12-29 22
Fax (9 05) 7 12-29 25
canada@thk.com

Brasil

THK Brasil Ltda.
Indústria e Comércio Ltda.
Av. Corifeu de Azevedo
Marques, 4077
Butantã - São Paulo - SP
05339-002
Tel. (55-11) 37 67-01 00
Fax (55-11) 37 67-01 01
thk@thk.com.br
www.thk.com.br

China

THK Beijing
Kunlun Hotel Room No.526
2 Xin Yuan Lu
Chaoyang District Beijing
Tel. (10) 65 90-35 57
Fax (10) 65 90-35 57

Hong Kong

THK Shouzan Co., Ltd.
4/Fl., Hanyee Bldg., Flat C
19-21 Hankow Road
Tsimshatsui, Kowloon
Tel. (8 52) 37 61 09 1
Fax (8 52) 37 60 74 9

Taiwan

THK Taiwan
C611 SHIH, 6F, No. 7
Wu-Chuan 1 Rd.
Wu-Ku Kung Yeh Chu
Hsin Chuang City
Taipei Hsien
Tel. (02) 22 96-49 90
Fax (02) 22 97-81 49

Malaysia

THK Malaysia
B-10-11 Block B (Level 12)
Menara Uncang Emas
85 Jalan Loke Yew
55200 Kuala Lumpur
Tel. (03) 92 78-11 37
Fax (03) 92 78-80 71

India

THK India
1050, 11th Main r.p.c.
Layout Bangalore 560040
Tel. (0 80) 3 30-15 24
Fax (0 80) 3 30-15 24
thk@satyam.net.in

South Africa

THK U.K. South Africa
P.O. Box 1057
Oudtshoorn 6620
Tel. (0 44) 2 72 00 20
Fax (0 44) 2 72 00 20

Plants

Europe

THK Manufacturing of Europe, S.A.S.
Parc d' Activités la Passerelle
68190 Ensisheim
Tel. (03) 89 83 44 00
Fax (03) 89 83 44 09

PGM Ballscrews Ltd.
Bodmin Road, Wyken
Coventry CV2 5DZ
Tel. (0 24) 76 84-19 00
Fax (0 24) 76 61-10 32

PGM Ireland Ltd.
Whitestown
Industrial Estate
Tallaght, Dublin 24
Tel. (01) 4 62-81 01
Fax (01) 4 62-90 80

USA

THK Manufacturing of America, Inc.
471 North High Street
Hebron, OH. 43025
Tel. (7 40) 9 28-14 15
Fax (7 40) 9 28-14 18

Japan

Head Office:
3-11-6 Nishi-Gotanda
Shinagawa-Ku
Tokyo 141
Tel. (03) 54 34-03 41
Fax (03) 54 34-03 45
www.thk.co.jp
thk001@thk.co.jp

Plants in:
Kofu, Yamaguchi, Yamagata, Mie, Tokyo, Nagoya, Osaka, Gifu, etc.