for a greener tomorrow

MITSUBISHI ELECTRIC
Changes for the Better

FACTORY AUTOMATION

Mitsubishi Electric AC Servo System MELSERVO-J5

Innovate Together

MITSUBISHI ELECTRIC SERVO SYSTEM
MELSERVO-J5



GLOBAL IMPACT OF MITSUBISHI ELECTRIC



Through Mitsubishi Electric's vision, "Changes for the Better" are possible for a brighter future.

Changes for the Better

We bring together the best minds to create the best technologies. At Mitsubishi Electric, we understand that technology is the driving force of change in our lives. By bringing greater comfort to daily life, maximizing the efficiency of businesses and keeping things running across society, we integrate technology and innovation to bring changes for the better.

Mitsubishi Electric is involved in many areas including the following

Energy and Electric Systems
A wide range of power and electrical products from generators to large-scale displays.

Electronic Devices
A wide portfolio of cutting-edge semiconductor devices for systems and products.

Home Appliance
Dependable consumer products like air conditioners and home entertainment systems.

Information and Communication Systems
Commercial and consumer-centric equipment, products and systems.

Industrial Automation Systems
Maximizing productivity and efficiency with cutting-edge automation technology.

OVERVIEW

■ Concept 4

■ Product Lines 10

■ Servo System 14

■ Servo System Controllers 28

■ Engineering Software 46

■ MELSERVO-J5 50

■ Mitsubishi Electric Solutions/Partners 70

■ Common Specifications (Combinations of Servo Motors and Servo Amplifiers, etc.) 1-1

■ Product Specifications of Servo System Controllers 2-1

■ MELSERVO-J5 Product Specifications

Servo Amplifiers 3-1
Rotary Servo Motors 4-1
Linear Servo Motors 5-1
Direct Drive Motors 6-1
Options/Peripheral Equipment 7-1
Low-Voltage Switchgear/Wires 8-1

■ Product List 9-1

■ Precautions 10-1

■ Support 11-1


MELSERVO-J5
CHARGE
PULL
CC-Link IE TSN
CN1A
CN1B
CN5
CN8
CN3
CN2
CN2L
CN4
MR-J5W2-22G
MR-J5-10G

Create new value with MELSERVO-J5. Unlock performance with a total drive solution.

Maximize system performance



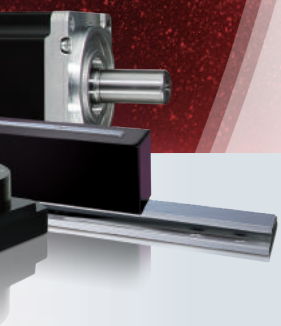

Progressiveness

For evolution of machines

- Performance improvement
- Program standardization

Connectivity

For flexible system configurations

- Integration with connectible devices

Usability

For quick operation start

- Tool enhancement
- Improved drive system usability

Maintainability

For prompt detection and diagnosis of failures

- Predictive/preventative maintenance
- Corrective maintenance

Heritage

For utilization of existing devices

- Interchangeability with previous generation models

Maximize the performance of your system and equipment with MELSERVO-J5 total drive solutions

Progressiveness

For evolution of machines

The dramatically improved basic performance of MELSERVO-J5 and CC-Link IE TSN enable total drive solutions that help to increase production efficiency and keep your equipment on the cutting edge.

Performance improvement

- High-speed/high-accuracy/multi-axis
- Vibration suppression
- Compact and energy efficient

Program standardization

- Conforms to IEC 61131-3
- Function blocks for motion control
- Synchronous control /cam control

Connectivity

For flexible system configurations

CC-Link IE TSN enables a high degree of compatibility with AI systems and IoT technology. Our servo system provides new opportunities for value creation with highly integrated connectible devices and a dramatically expanded range of compatible devices.

Integration with connectible devices

- CC-Link IE TSN
- Vision system integration

Usability

For quick operation start

Our intuitive and user-friendly products are designed to make program development as simple as possible. From system design to maintenance, efficiency is improved at each step of the development process through software and sizing tool enhancement.

Tool enhancement

- Simple programming
- Motor sizing/model selection software
- Collaboration with partners

Improved drive system usability

- Single connector/one-touch lock
- Single/dual cable types
- Servo adjustment



Maintainability

For prompt detection and diagnosis of failures

Thanks to years of technical know-how and experience designing state of the art drive technology, we have created predicative and planned maintenance functions that allow you to quickly discover, diagnose, and resolve errors when they occur.

Predictive maintenance

- Machine diagnosis

Corrective maintenance

- Drive recorder

Zero-maintenance

- Batteryless absolute position encoder

Heritage

For utilization of existing devices

Incorporate existing manufacturing devices into your new system and benefit from reduced costs and faster construction speed.

Interchangeability with previous generation models

- Interchangeable mounting method

Created using a brand new approach, this reducing the TCO through improved

Focused on improving total performance.
The MELSERVO-J5 series servo system boasts industry-leading level basic performance.
The high-speed, high-precision capabilities of MELSERVO-J5 help to increase the productivity of your machines.



Motion module
RD78GH Available soon

Motion module
RD78G

Minimum operation cycle *1	Max. number of control axes *1
31.25 µs	256 axes

Industry-leading level

*1. The values are applicable when RD78GH is used.



Motion Control Software
SWM78 Available soon

Minimum operation cycle *2	Max. number of control axes
250 µs	256 axes

*2. The number of controllable axes varies by the operation cycle.

CC-Link IE TSN

CC-Link IE TSN supports TCP/IP communications and applies it to industrial architectures through its support of TSN enabling real-time communications. With its flexible system architecture and extensive setup and troubleshooting features make CC-Link IE TSN ideal for building an IIoT infrastructure across the manufacturing enterprise.
The communications speed is 1Gbps.

* TSN: Time Sensitive Networking
* IIoT: Industrial Internet of Things

CC-Link IE TSN

Servo System Controllers

The servo system controller is a controller which performs various types of motion control, including positioning, synchronous, cam, speed, and torque control. We offer two new types of servo system controllers: RD78GH/RD78G Motion modules and SWM78 Motion Control Software.

Motion Modules RD78GH RD78G

RD78GH/RD78G Motion modules utilize a multi-core processor to achieve enhanced basic performance.

Motion Control Software SWM78

SWM78 Motion Control Software performs motion control by being installed on an industrial personal computer with a real-time operating system.

next-generation servo system contributes to productivity

CC-Link IE TSN

MELSERVO-J5 series servo amplifiers

Speed frequency response	Command communication cycle
3.5 kHz	31.25 μs

Industry-leading level



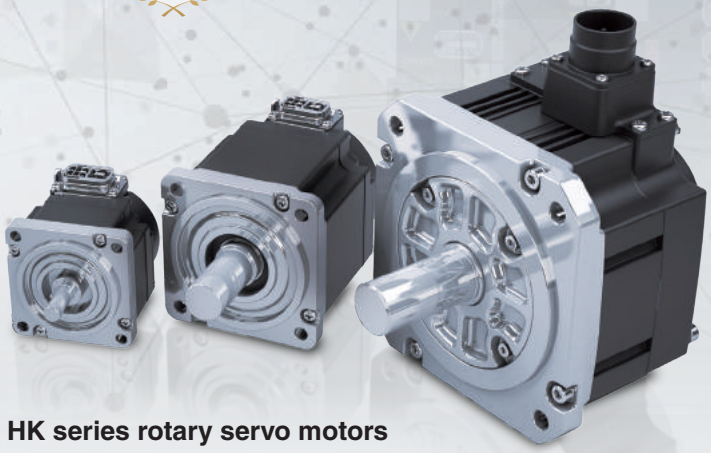

HK series rotary servo motors

Encoder	Encoder resolution	Max. speed *3
Batteryless absolute position encoder	26 bit	6700 r/min

Industry-leading level

*3. The servo motor speed varies by the models.



Simple converters

Capacity*4	Connectable servo amplifiers
3 kW	6 units (max.)

*4. Power supply input: 200 V

Servo Amplifiers

The MELSERVO- J5 series are high-performance, industry-leading servo amplifiers featuring a unique engine that is more powerful than ever before.
These servo amplifiers can connect to CC-Link IE TSN to perform high-speed, high-precision control.
Each multi-axis servo amplifier drives a maximum of either two or three servo motors (depending on the model of servo amplifier chosen), simplifying wiring and enabling a compact machine at a lower cost.

MITSUBISHI ELECTRIC SERVO SYSTEM MELSERVO-J5

Rotary Servo Motors

The HK series rotary servo motors are equipped with a 26-bit resolution batteryless absolute position encoder.

Batteryless Absolute Position Encoders

Mitsubishi Electric's unique multi-revolution detection method allows the saving of absolute position data without a battery.

Single Connector/One-Touch Lock/Single Cable Type

The servo motor power supply, encoder, and electromagnetic brake can be connected using only a single cable.
The one-touch lock lever allows for simple wiring.

* "Industry-leading level" refers to results from a Mitsubishi Electric April 2019 research study.

Innovate Together

CONTROLLER

Programmable Controllers



MELSEC iQ-R

CC-Link IE TSN-Compatible Motion Modules

Available soon



RD78G



RD78GH

CC-Link IE TSN-Compatible Motion Control Software

Available soon



SWM78

INTERFACE

CC-Link IE TSN

CC-Link IE TSN

SERVO AMPLIFIER

CC-Link IE TSN-Compatible Servo Amplifiers



MR-J5-G

CC-Link IE TSN-Compatible 2-Axis Servo Amplifiers



MR-J5W2-G

CC-Link IE TSN-Compatible 3-Axis Servo Amplifiers



MR-J5W3-G

SERVO MOTOR

Rotary Servo Motors



Small capacity, low inertia
HK-KT Series
Capacity: 0.05 to 2.0 kW



Medium capacity, medium inertia
HK-ST Series
Capacity: 0.5 to 5.0 kW

SOLUTION

e-F@ctory

We take full advantage of Mitsubishi Electric's technological capability that achieved development of FA devices, along with our connectivity technology which makes it possible to connect FA with IT.
e-F@ctory optimizes manufacturing overall by connecting all devices and equipment, and then analyzing and utilizing the vast amount of data collected.

Create new value with MELSERVO-J5.
Unlock performance with a total drive solution

Programmable Controllers






MELSEC iQ-R　MELSEC-Q　MELSEC iQ-F/F　MELSEC-L

Graphic Operation Terminals



GOT2000

SOFTWARE

- MELSOFT GX Works3
- MELSOFT EM78 SDK Available soon
- MELSOFT MR Configurator2
- Drive System Sizing Software Motorizer

Positioning Modules






RD75P
RD75D

QD75PN
QD75DN

FX3U-1PG
FX5-20PG

LD75P
LD75D

LOW-VOLTAGE SWITCHGEAR

Molded-Case Circuit Breakers



WS-V

Magnetic Contactors



MS-T

Pulse Train/ Analog Voltage

General Purpose Interface-Compatible Servo Amplifiers



MR-J5-A

OPTION

Simple Converters



MR-CM

Linear Servo Motors



Core type
LM-H3 Series
Rating: 70 to 960 N



Core type (natural/liquid cooling)
LM-F Series
Rating: 300 N (natural cooling)
Rating: 600 N (liquid cooling)

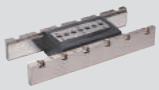

Core type with magnetic attraction counter-force
LM-K2 Series
Rating: 120 to 1440 N



Coreless type
LM-U2 Series
Rating: 50 to 600 N

Direct Drive Motors

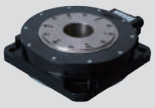

Low-profile flange type
TM-RG2M Series
Rating: 2.2 to 9 N·m

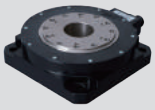

Low-profile table type
TM-RU2M Series
Rating: 2.2 to 9 N·m



High-rigidity
TM-RFM Series
Rating: 2 to 120 N·m

e-F@ctory Alliance

Through powerful alliances between Mitsubishi Electric, who boasts a broad-ranging product appeal in the FA domain, and partners that participate in the FA partnership program (e-F@ctory Alliance) promoted by Mitsubishi Electric, we will achieve new business creation and new monozukuri.

Product Lines

■Servo System Controllers NEW

Servo system controller		Number of control axes	Slots occupied	Features
Motion modules	RD78G 	1 to 4 1 to 8 1 to 16 1 to 32 1 to 64	1	MELSEC iQ-R series CC-Link IE TSN-compatible Motion module • Performs motion control (positioning, synchronous, cam, speed, and torque control) • Equipped with a dual-core processor
	RD78GH Available soon 	1 to 128 1 to 256	2	MELSEC iQ-R series CC-Link IE TSN-compatible Motion module • Performs motion control (positioning, synchronous, cam, speed, and torque control) • Equipped with a quad-core processor • Minimum operation cycle 31.25 [μs]
Motion Control Software	SWM78 Available soon 	1 to 16 1 to 32 1 to 64 1 to 128 1 to 256	–	CC-Link IE TSN-compatible Motion Control Software (Note 1) • Performs motion control (positioning, synchronous, and cam control) • Supports INtime (real-time operating system) for Windows® • Programming in Visual C++®

Notes: 1. An industrial personal computer, INtime, and Microsoft Visual Studio® are not included and must be prepared by the user.

■Servo Amplifiers NEW

●: Supported ○: Future support planned –: Not supported

Servo amplifiers		Number of control axes	Power supply specifications (Note 2)	Rated output [kW] (Note 1)	Command interface			Control mode				Compatible servo motor series							
					CC-Link IE TSN	Pulse train	Analog voltage	Position	Speed	Torque	Fully closed loop control	HK-KT	HK-ST	LM-H3	LM-F	LM-K2	LM-U2	TM-RG2M	TM-RU2M	TM-RFM
CC-Link IE TSN	MR-J5-G 	1 axis	200 V AC	0.1, 0.2, 0.4, 0.6, 0.75, 1, 2, 3.5	●	–	–	●	●	●	○	●	●	●	●	●	●	●	●	●
			400 V AC	0.6, 1, 2, 3.5	○	–	–	○	○	○	○	○	○	–	–	–	–	–	–	–
	MR-J5W2-G 	2 axes	200 V AC	0.2, 0.4, 0.75, 1	●	–	–	●	●	●	○	●	●	●	–	●	●	●	●	●
	MR-J5W3-G 	3 axes	200 V AC	0.2, 0.4	●	–	–	●	●	●	○	●	●	●	–	●	●	●	●	●
General-purpose interface	MR-J5-A 	1 axis	200 V AC	0.1, 0.2, 0.4, 0.6, 0.75, 1, 2, 3.5	–	●	●	●	●	●	○	●	●	●	●	●	●	●	●	●
			400 V AC	0.6, 1, 2, 3.5	–	○	○	○	○	○	○	○	○	–	–	–	–	–	–	–

Notes: 1. The value listed is the servo amplifier rated output. Refer to "Combinations of Servo Motors and Servo Amplifiers" for compatible servo motors.
2. 200 V AC servo amplifiers are compatible with DC power supply input as standard.

■Options NEW

Converters		Connectable servo amplifiers	Power supply specifications	Capacity [kW]	Features
Simple converter	MR-CM 	1 to 6 units	200 V AC	3	MR-CM supports multi-axis systems and enables the following: • boosting energy efficiency by using regenerative energy effectively • reducing the number of molded-case circuit breakers and magnetic contactors to be used • simplifying wiring • reducing installation space

■Rotary Servo Motors NEW

●: Supported

Rotary servo motor series (Note 4)		Rated speed (maximum speed) [r/min] (Note 2)	Rated output [kW] (Note 1)	With electro-magnetic brake (B)	IP rating (Note 3)	Replaceable series	Features	Application examples
Small capacity	HK-KT series 	3000 (6700)	0.05, 0.1, 0.15, 0.2, 0.4, 0.6, 0.75, 1.0, 1.5, 2.0 0.4, 0.6, 0.75, 1.0, 1.5, 2.0	●	IP67	HG-KR	Low inertia Batteryless absolute position encoder Product line includes flat type Connects using single connector	Belt drives Robots Mounters X-Y tables Semiconductor manufacturing systems Battery manufacturing systems
Medium capacity	HK-ST series 	2000 (4000)	0.5, 1.0, 1.75, 2.0, 3.0, 3.5 0.5, 1.0, 1.75, 2.0, 3.0, 3.5, 5	●	IP67	HG-SR	Medium inertia Batteryless absolute position encoder	Material handling systems Robots X-Y tables Battery manufacturing systems

Notes: 1. [ ]: For 400 V. 400 V servo amplifiers are planned for a future release. Refer to "Rotary Servo Motors Specifications" for when 200 V servo amplifiers drive rotary servo motors.
2. The speed varies by the model type. Refer to "Rotary Servo Motors Specifications" for details.
3. The shaft-through portion is excluded.
4. Contact your local sales office for geared servo motors.

■Linear Servo Motors

Linear servo motor series		Maximum speed [m/s]	Continuous thrust [N]	Maximum thrust [N]	Cooling method	Features	Application examples
Core type	LM-H3 series 	3.0	70, 120, 240, 360, 480, 720, 960	175, 300, 600, 900, 1200, 1800, 2400	Natural cooling	Suitable for space-saving. Compact size and high thrust. Maximum speed: 3 m/s.	Mounters Wafer cleaning systems FPD assembly machines Material handlings
	LM-F series 	2.0	300	1800	Natural cooling	Compact size. The integrated liquid-cooling system doubles the continuous thrust.	Press feeders NC machine tools Material handlings
		2.0	600	1800	Liquid cooling		
	LM-K2 series 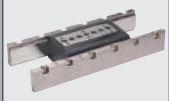	2.0	120, 240, 360, 720, 1440	300, 600, 900, 1800, 3600	Natural cooling	High thrust density. Magnetic attraction counter-force structure enables longer life of the linear guides and lower audible noise.	Mounters Wafer cleaning systems FPD assembly machines
Coreless type	LM-U2 series 	2.0	50, 75, 100, 150, 225, 400, 600	150, 225, 300, 450, 675, 1600, 2400	Natural cooling	High thrust density. Magnetic attraction counter-force structure enables longer life of the linear guides and lower audible noise.	Screen printing systems Scanning exposure systems Inspection systems Material handlings

■Direct Drive Motors

Direct drive motor series		Motor outer diameter [mm]	Hollow shaft diameter [mm]	Rated speed [r/min]	Maximum speed [r/min]	Rated torque [N·m]	Maximum torque [N·m]	IP rating (Note 1)	Features	Application examples
Low-profile	TM-RG2M/TM-RU2M series 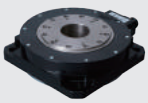	ø130	ø20	300	600	2.2	8.8	IP40	Suitable for low-speed and high-torque operations. Smooth operation with less audible noise. The motor's low profile design contributes to compact construction and a low center of gravity for enhanced machine stability. Clean room compatible.	Semiconductor manufacturing devices Liquid crystal manufacturing devices Machine tools
		ø180	ø47	300	600	4.5	13.5	IP40		
		ø230	ø62	300	600	9	27	IP40		
High-rigidity	TM-RFM series 	ø130	ø20	200	500	2, 4, 6	6, 12, 18	IP42		
		ø180	ø47	200	500	6, 12, 18	18, 36, 54	IP42		
		ø230	ø62	200	500	12, 48, 72	36, 144, 216	IP42		
		ø330	ø104	100	200	40, 120	120, 360	IP42		

Notes: 1. Connectors and the gap along the rotor (output shaft) are excluded.

Construct a high-performance servo system using our extensive product line

We understand that each system is different and has unique drive control requirements.
To meet these demands, we have expanded the product line for our next-generation servo system to offer simple converters, engineering software, servo system controllers, servo amplifiers, servo motors, and a variety of other components.
Mitsubishi Electric is dedicated to satisfying all of our customers' needs.



Collaborating with our extensive group of partners allows us to flexibly support your system needs

Servo systems are constructed using iQ Platform devices such as controllers, servo drivers, actuators, and sensors, and collaboration with our partner companies allows us to expand the number of possibilities available to customers. For example, partner products such as stepping motors, direct drive motors, vision systems, and various types of software are available to keep your equipment on the cutting edge. We will be continuously expanding collaborations with partners companies to support customers' systems.


Collaboration with partners

Single network

CC-Link IE TSN

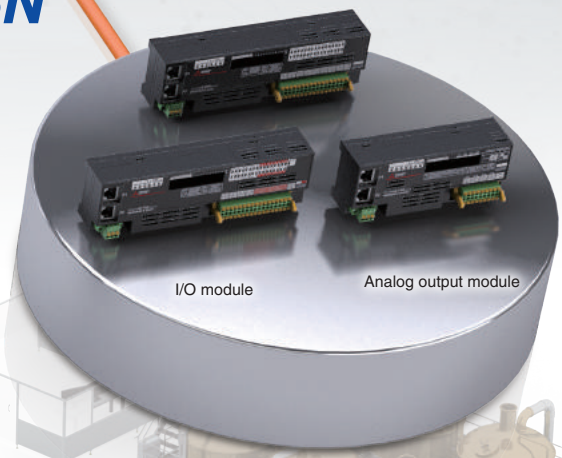
Input module
I/O module
Analog output module


Inverter

Open integrated networking across the manufacturing enterprise

CC-Link IE TSN

CC-Link IE TSN supports TCP/IP communications and applies it to industrial architectures through its support of TSN enabling real-time communications. With its flexible system architecture and extensive setup and troubleshooting features make CC-Link IE TSN ideal for building an IIoT infrastructure across the manufacturing enterprise.

* TSN: Time Sensitive Networking
* IIoT: Industrial Internet of Things

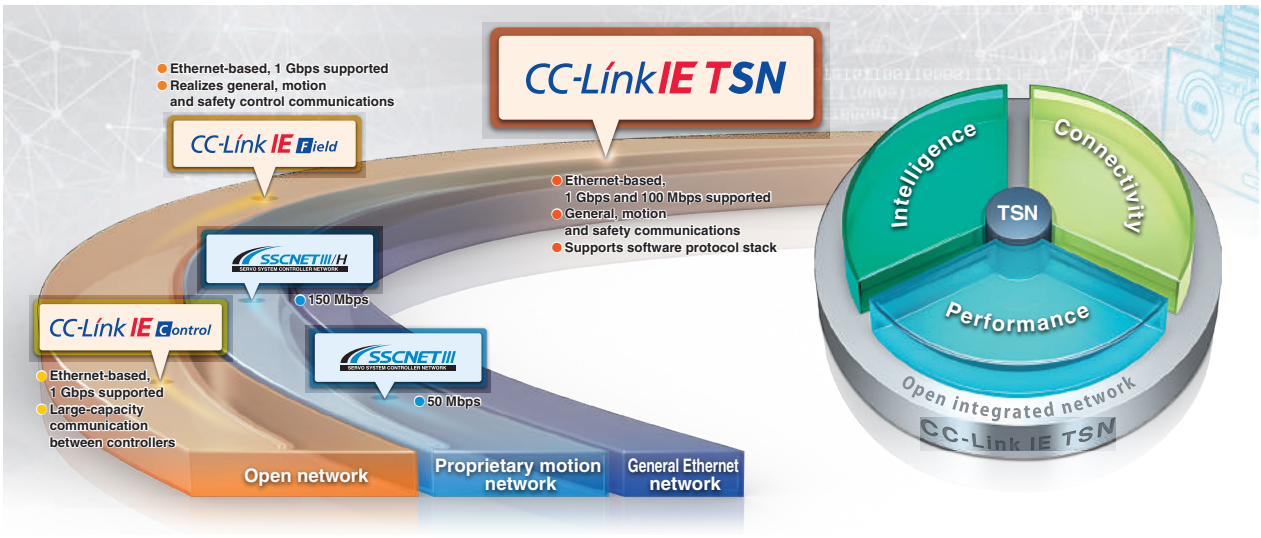

Real-Time Network Performance Even When Integrated with Information Data

TSN technology enables mixing of deterministic communications with IT system information data on the same network. Giving higher priority to CC-Link IE TSN cyclic communications and TCP/IP communications by allocating increased network bandwidth, devices using general Ethernet communications can be connected on the same network while maintaining real-time control communication performance.

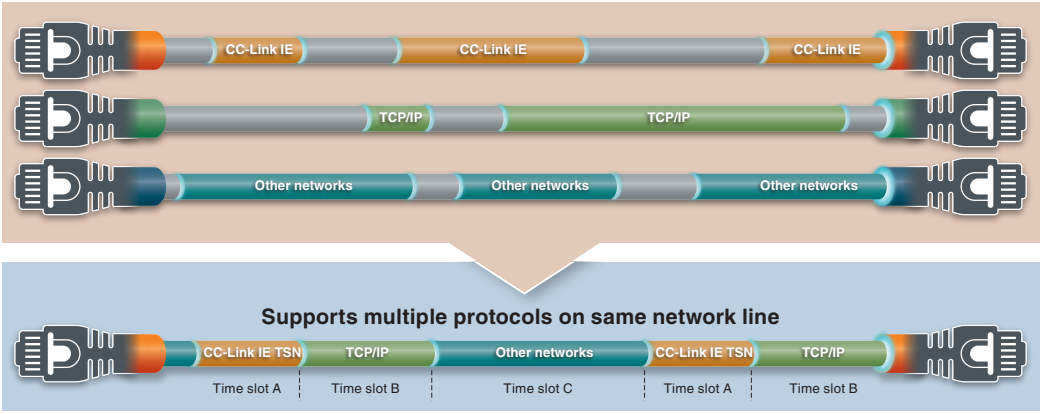

Deterministic Control Even When Mixed with TCP/IP Communication

Deterministic performance of cyclic communication is maintained even when mixed with information data (non real-time). This enables TCP/IP communication devices to be used without affecting overall control.

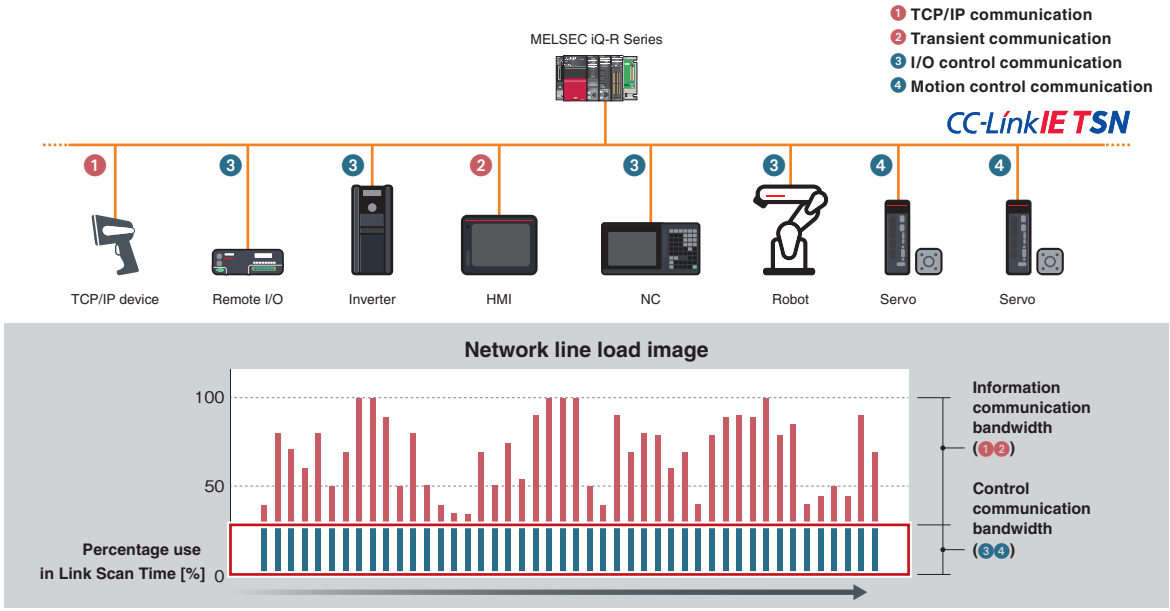

Network configuration example (includes functions and products planned for future support/release.)

Integrated Network

Current network systems use multiple networks to enable communication between IT and control systems on the shop floor.
CC-Link IE TSN is a one-stop solution for integrating different networks, thereby realizing flexibility in topology and reducing wiring cost.

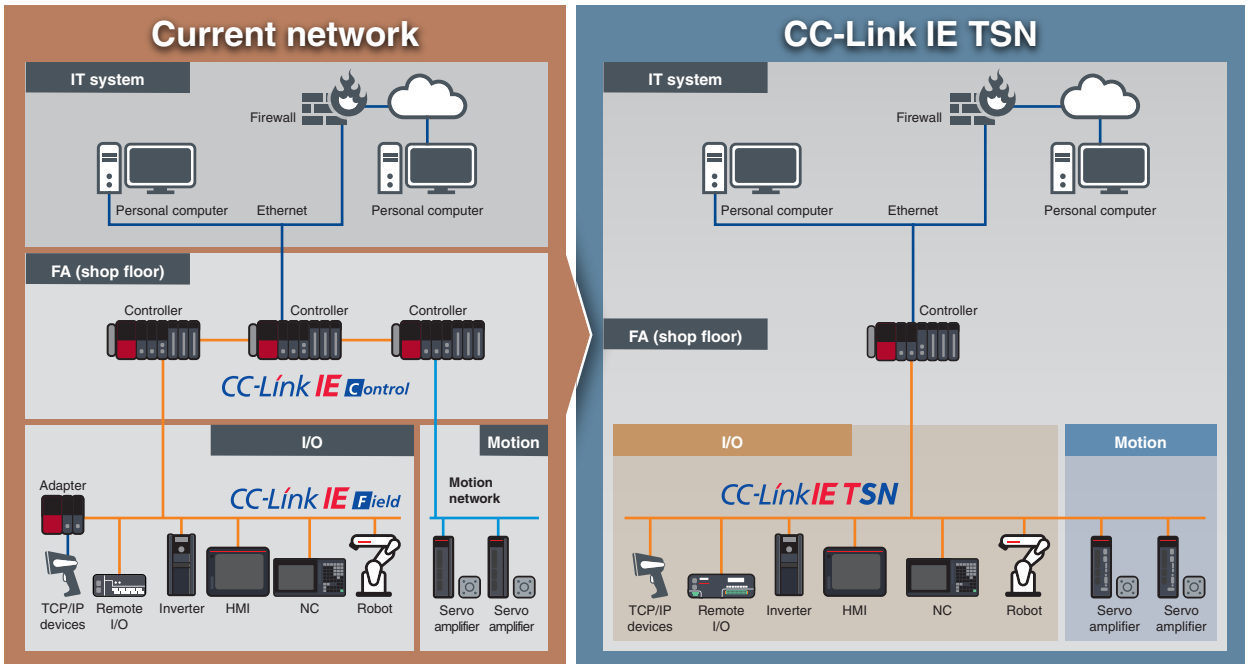

Network configuration example (includes functions and products planned for future support/release.)

High-Speed, High-Accuracy Motion Control

CC-Link IE TSN controls I/O modules while also maintaining high-speed motion control. The single network boosts machine performance.

- Motion control (high-speed processing)
- I/O control (low-speed processing)

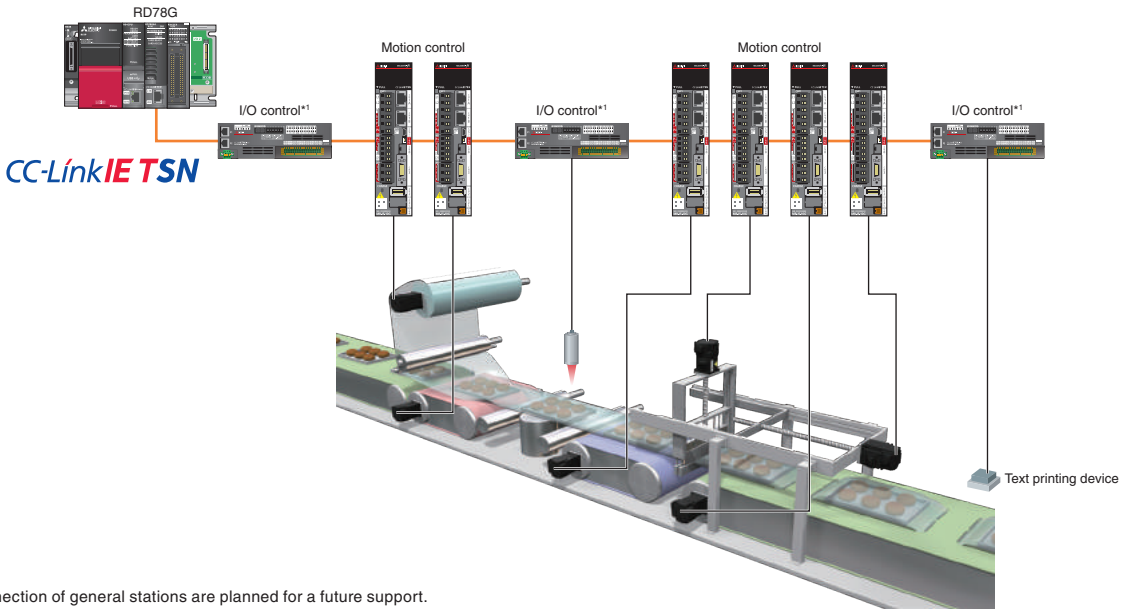

*1. The connection of general stations are planned for a future support.

Time Synchronization

Set time is completely synchronized among servo amplifiers, Motion modules, and PLC CPUs. This time synchronization enables accurate recording of the event history in chronological order, making it simple to identify the cause of errors.

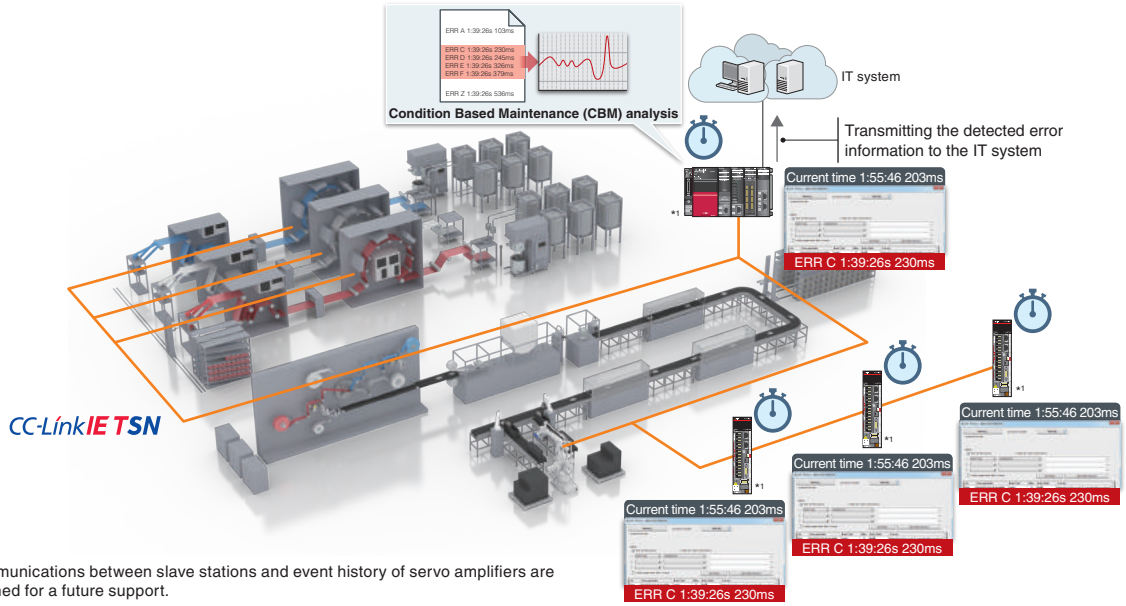

*1. Communications between slave stations and event history of servo amplifiers are planned for a future support.

Seamless Connectivity Between IP Communications Devices and the Servo System

Future support planned

Various types of modules and devices, such as servo amplifiers, I/O modules, and IP communication devices, can all be connected to the CC-Link IE TSN. The connection order of these modules is highly flexible; for example, I/O modules can connect between servo amplifiers with high-speed communications.

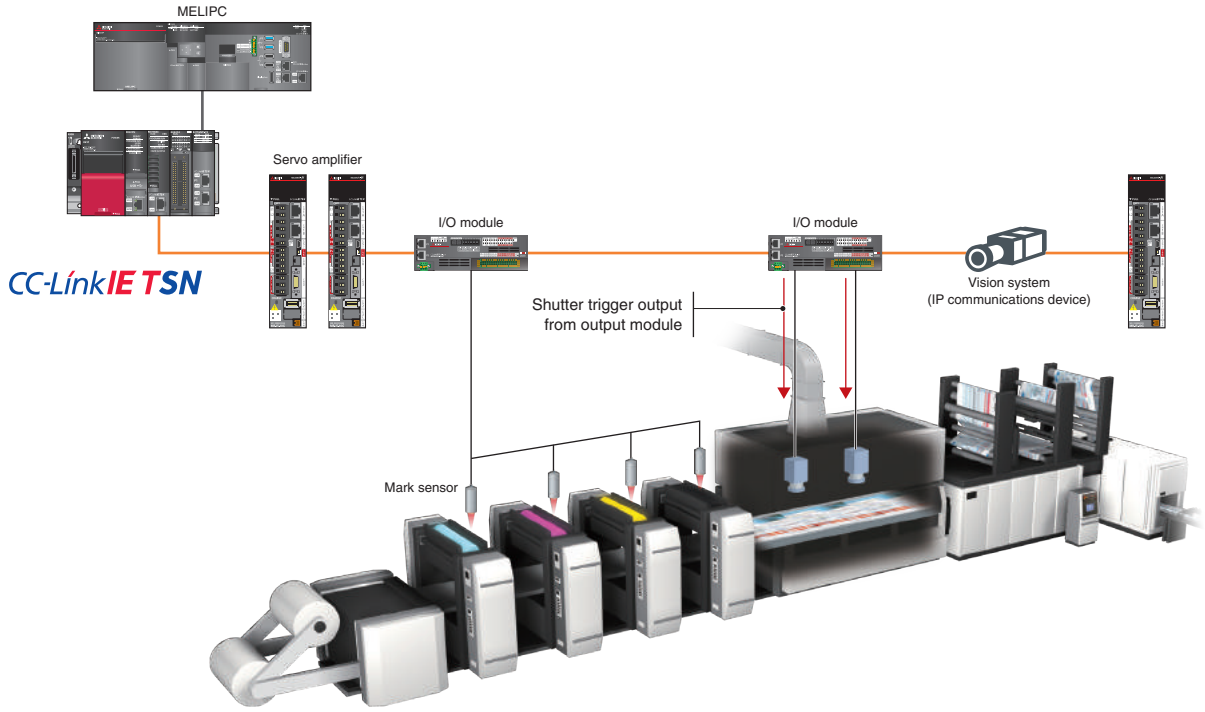

Large-Capacity Data Communications

CC-Link IE TSN is a high-speed, large-capacity 1 Gbps communications network that is capable of sending and receiving large amounts of data, such as manufacturing, quality, and control data from the production process. The network can transmit large recipe data or traceability data at high speeds without degrading the performance of servo system communications. In addition, Ethernet supported devices can directly and seamlessly connect to controllers on the same network line.

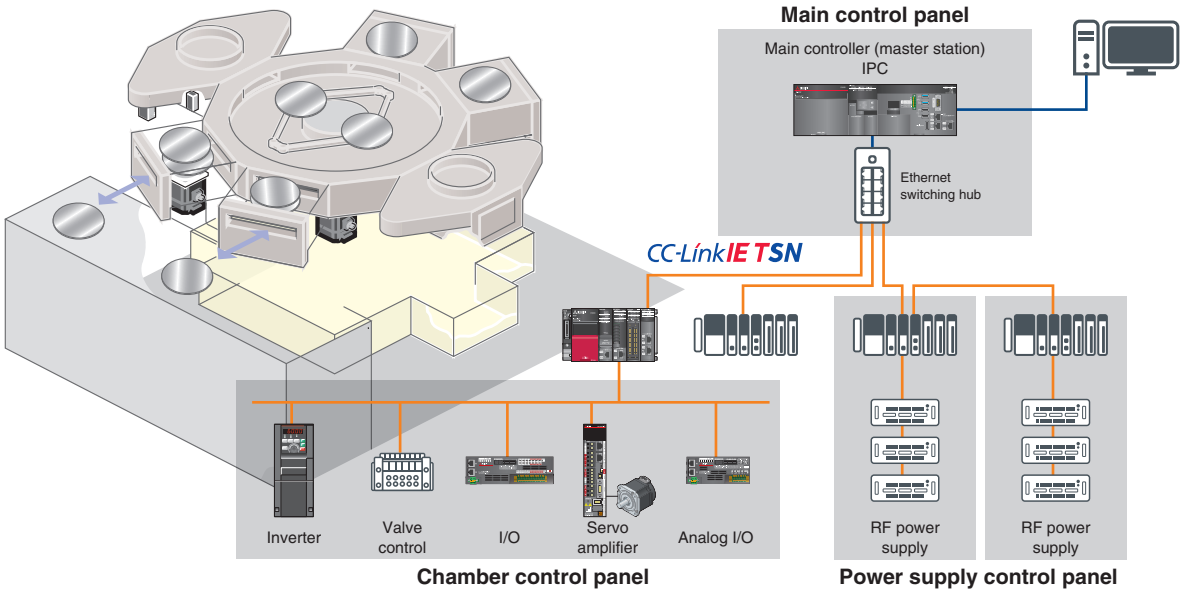

Network configuration example (includes functions and products planned for future support/release.)

Simple maintenance

Comprehensive diagnostic functions contribute to improved maintenance

Increasing the capacity of your production line is an important factor in this fiercely cost-competitive market.
The MELSERVO-J5 series servo system provides various kinds of maintenance functions that predict and prevent unforeseen problems and enable quick recovery when trouble arises.
These functions contribute to reduced downtime and increased productivity while protecting the quality of your products.

MELSERVO-J5 series servo amplifiers and servo motors are equipped with various predictive and preventative maintenance functions.

Predictive Maintenance (CBM)

Predictive maintenance, also known as Condition Based Maintenance (CBM), is the practice of detecting changes in machine vibration and friction so that parts can be replaced accordingly before they fail.
Performing predictive maintenance leads to increased machine capacity and helps to avoid downtime, reduce maintenance time, and improve both productivity and product quality.

Detects Changes in Vibration and Friction to Predict the Life of Mechanical Drive Components

[Machine diagnosis function]
The machine diagnosis function detects age-related deterioration based on the frictions and vibrations of mechanical drive components such as ball screws, belts, and gears. This function automatically generates a failure warning limit, detects errors, and outputs a warning upon signs of failure. Results of the failure are transmitted via CC-Link IE TSN to the motion module and IT system and can be used for maintenance and overall machine diagnostics.

Maisart

Ball screw

To detect the life of the ball screw:

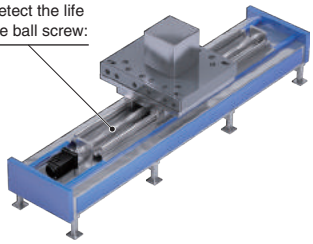

- Friction failure prediction with the friction estimation function
- Vibration failure prediction with the vibration estimation function

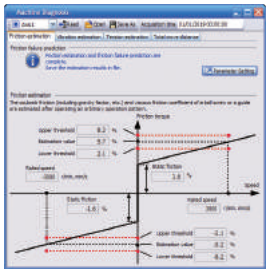

Estimated friction value is displayed.

Belt NEW

To detect the life of the belt:

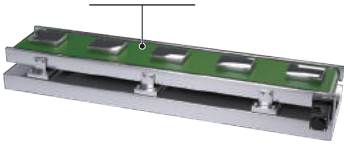

- Static friction failure prediction
- Belt tension deterioration prediction

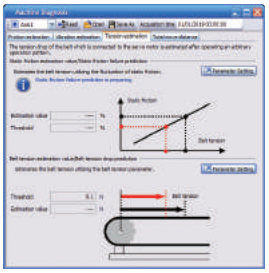

Estimated static friction and belt tension are displayed.

Gear NEW

To detect the wear level of the gear:

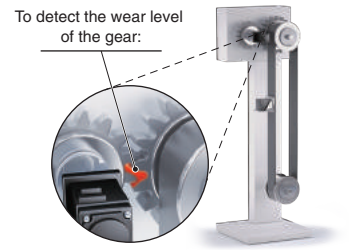

- Backlash estimation function
- Gear failure prediction



Estimated backlash value is displayed.

Preventative Maintenance (TBM) *1

*1. TBM stands for Time Based Maintenance.

Machine Diagnosis (Mechanical Drive Components)

This function estimates when a machine failure will occur based on the total travel distance of the servo motor, and notifies when it is time for replacement if the rated life of the mechanical drive components is set.

● Machine total travel distance failure prediction

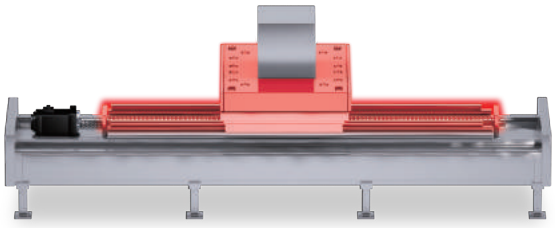

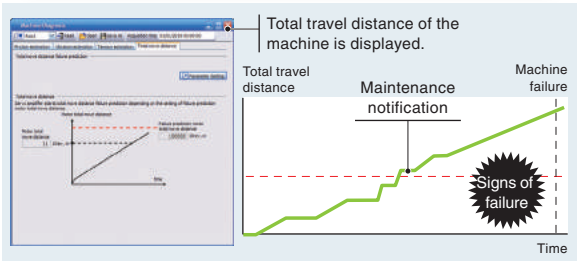

Servo Amplifier Life Diagnosis

This function displays the cumulative energization time and the number of inrush relay on/off times. The data can be used to check life of the parts as a rough guide.

● Cumulative energization time (Smoothing condenser/ cooling fan life span)
● The number of inrush relay on/off times (Inrush relay life)

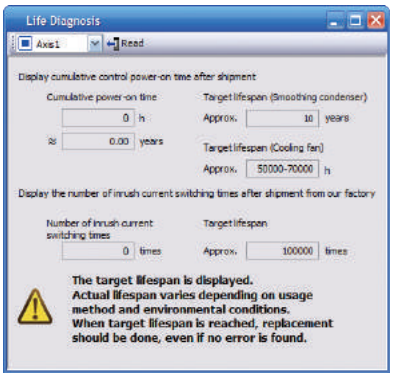

Corrective Maintenance

Servo Amplifier Drive Recorder

Enhanced functions

This function continuously monitors the servo status and records the status transition such as a trigger condition before and after an alarm for a fixed period of time. Reading the servo data on MR Configurator2 helps you analyze the cause of the alarm. In addition to the monitor values and the waveform of the past 16-time alarms in the alarm history, the system configuration and the servo parameters are displayed. Alarm occurrence time is also displayed when the servo amplifier and the controller are normally in communication on CC-Link IE TSN.

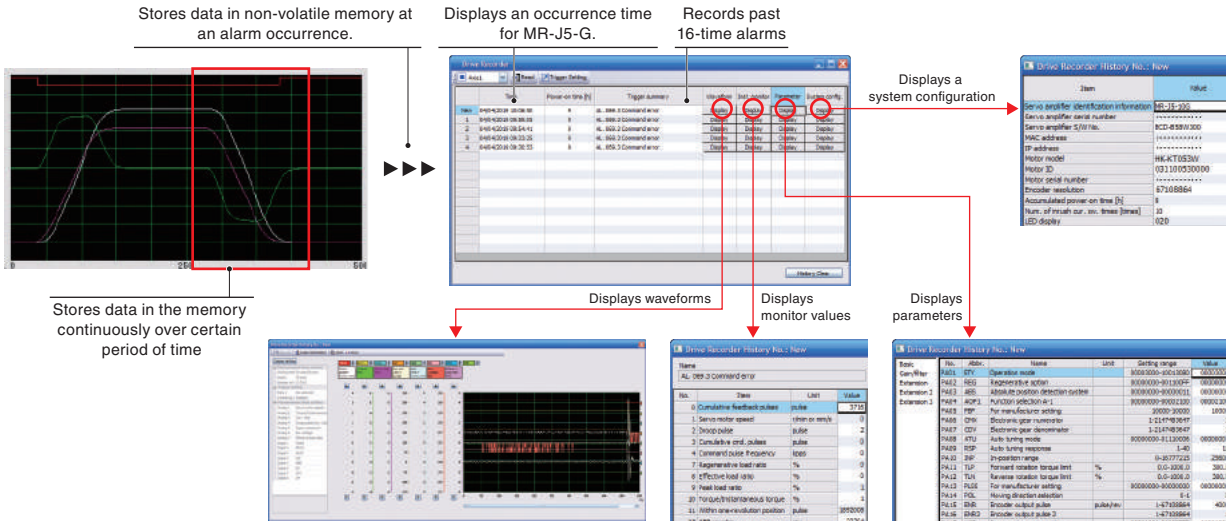

An engineering environment that provides common, consistent usability throughout all product development phases

Programmable Controller Engineering Software

MELSOFT GX Works3

Program creation is largely dependent on the ability of the programmer; therefore, an enormous amount of time is often spent on creating a servo program where a high level of programming expertise is required.
"MELSOFT GX Works3" introduces a more intuitive, efficient, and user-friendly programming environment that revolutionizes the programming process and minimizes hassles.

Engineering Environment for Maximizing Your Machine Performance

● Mitsubishi Electric offers a complete, consistent engineering environment which covers all aspects of the product development cycle - from sizing motors all the way to programming with function blocks, startup, and maintenance.

System Design → **Programming**

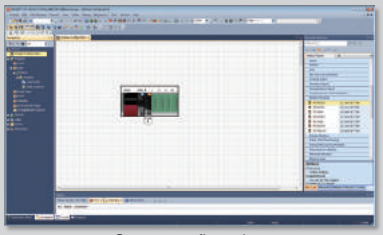
System configuration

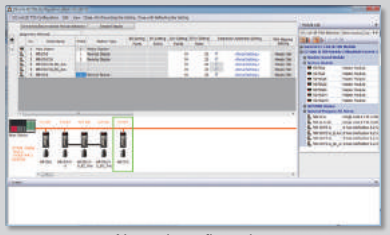
Network configuration

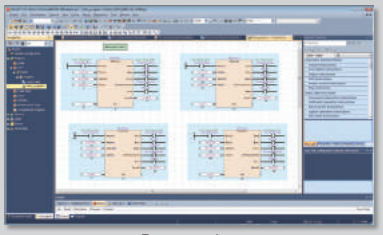
Programming



e-Manual



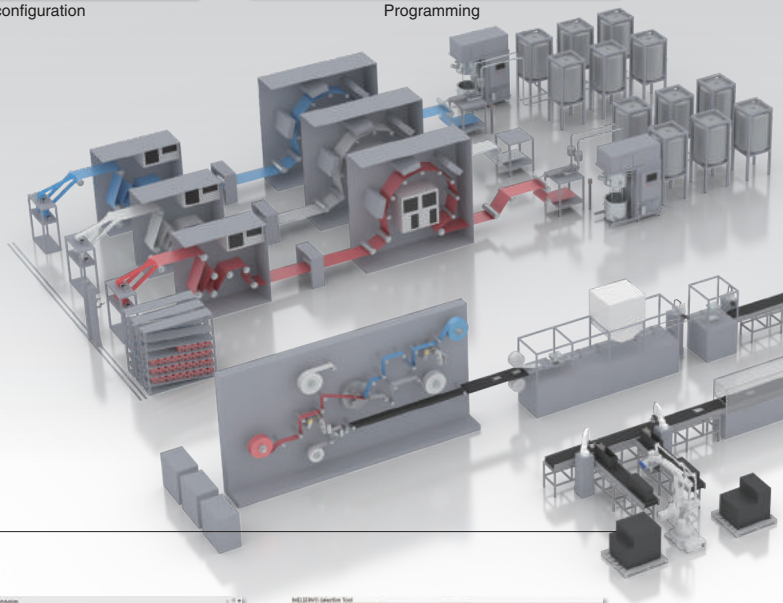

Useful Servo Software

[Drive system sizing software: "Motorizer"]
Our upgraded motor sizing software enables you to more flexibly select a suitable servo system for your machine. The upgraded features include expansion of selectable load mechanisms (12 types), multiple sizing results, and the ability to size a multi-axis system.

[Model selection software] Available soon
Servo amplifiers, servo motors, and indispensable options such as encoder cables can all be selected.


Motor sizing software


Model selection software

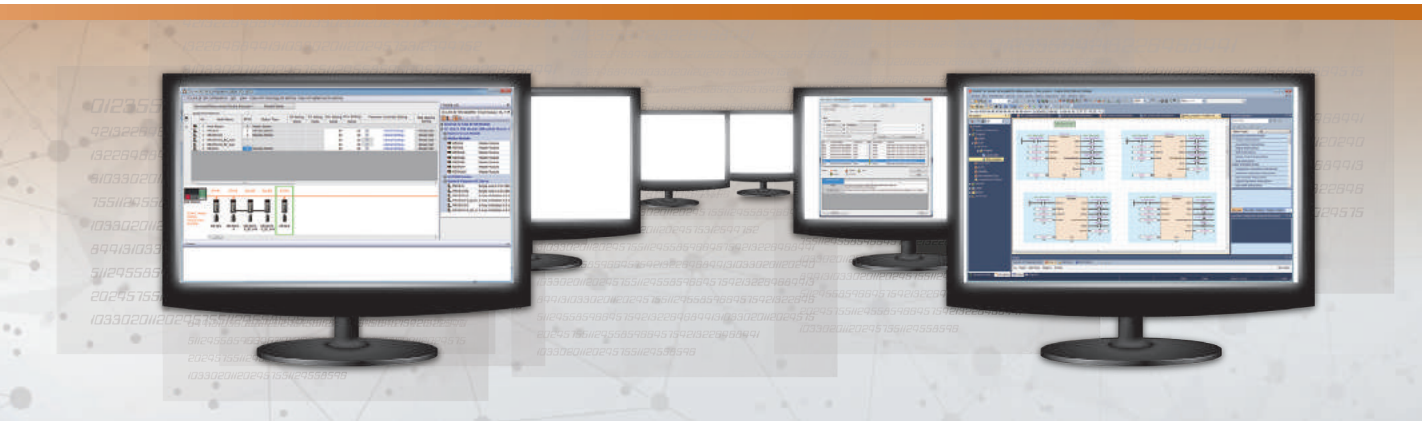

● All-in-one engineering platform MELSOFT GX Works3 allows you to set different modules in a single project, including the setting of a wide range of areas from servo amplifier parameters to PLC CPU data.

Debug

Maintenance

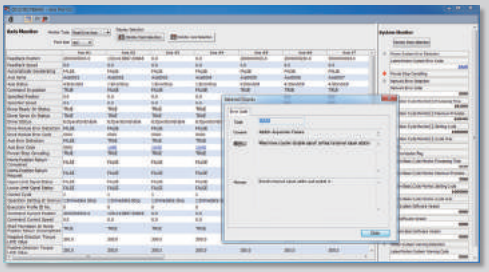

Monitor



Logging setting file



Servo adjustment

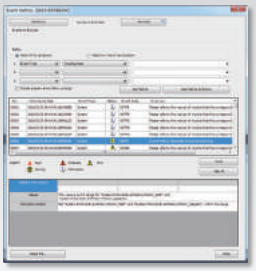

Event history

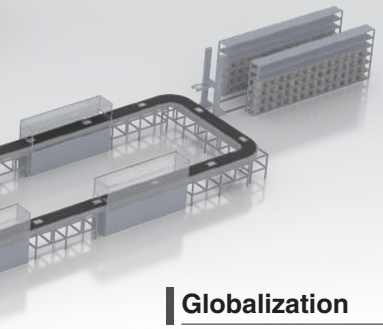

Globalization

[PLCopen® Motion Control FB]
PLCopen® Motion Control FB is a standardized interface, and therefore people other than the program designer can understand the programming, leading to reduced design and maintenance time.

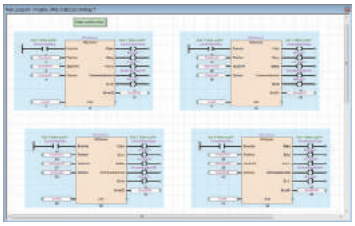

[Conforms to IEC 61131-3]
MELSOFT GX Works3 realizes structured programming such as ladder and ST, making project standardization across multiple users even easier.

[Multi-language support for global operations]
To adhere to today's global production needs, MELSOFT GX Works3 supports multi-language features at various levels, from the multiple language software menu system to device comment language switching features.
Supported languages: English, Japanese, and Chinese.

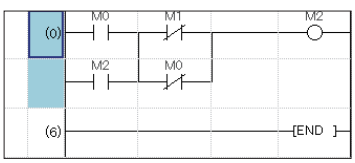

Easy programming

Faster, Simpler, Intuitive Programming with MELSOFT GX Works3

The software supports the internationally standardized PLCopen® Motion Control Function Blocks for motion control programming, and provides three selectable programming languages: ladder diagram (Ladder), function block diagram/ladder diagram (FBD/LD), and structured text language (ST). Select the programming method that suits your system scale, the application, and the required functions.

Programming

MELSOFT GX Works3 includes various user-friendly features - including intuitive operation with graphical setting screens, labels, and function blocks.
These features greatly help users create a program faster and simpler.

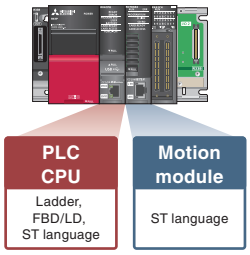



● Ladder diagram

Ladder diagram is a programming language used to describe sequence control. Each ladder consists of contacts and coils and represents logical operations consisting of AND/OR in combinations of series and parallel.

● Structured text language

ST language is defined by International Standard IEC61131-3 that defines the logic description system.

● FBD/LD

In FBD/LD programs, data flows from the output point of a function block, function, variable (label or device), or constant to the input point of another function block or variable.

Programming Using Function Blocks

The software offers a wide selection of function blocks - PLCopen® Motion Control Function Blocks and Mitsubishi Electric's original function blocks. You can easily create a program just by choosing the function blocks that your system requires.

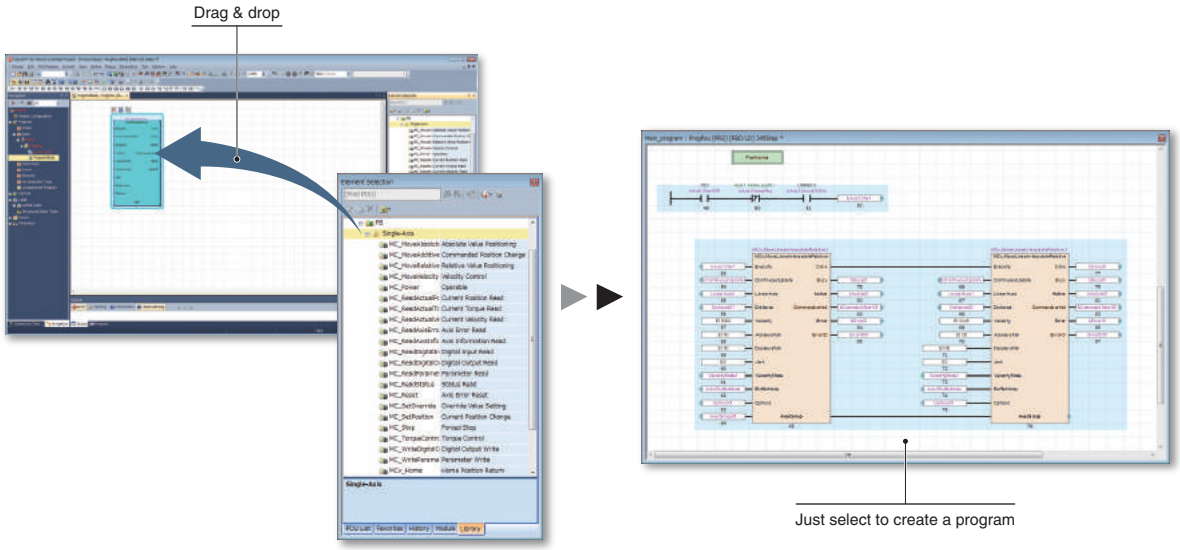

Easy Programming Through Structured Text Language

Create a structured text program just by dragging and dropping function blocks.

- Easy programming through drag & drop of programming elements
- Consistent usability for more intuitive operation
- A wide selection of programming elements in the library, helping to reduce programming time
- MELSOFT GX Works3 conforms to IEC 61131-3 and realizes structured programming such as ladder and ST, making project standardization across multiple users even easier.

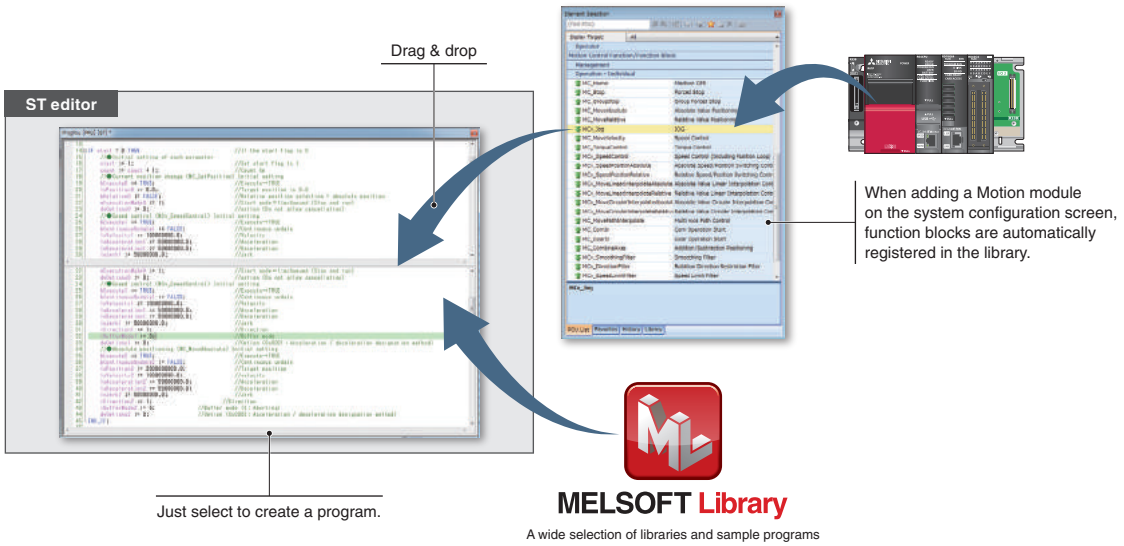

Build the future together with total drive solutions



Every industry and application requires different characteristics from a servo system. These systems must be flexible enough to meet more common requirements, like high speed and accuracy, while also fulfilling the specific operation requirements.
Our extensive servo product line is able to meet a wide range of automation needs by combining with a variety of FA (Factory Automation) products.

High-Speed, High-Accuracy Trajectory Control

Enabled by our high-resolution servo motor encoder, a smooth profile can be easily drawn on a workpiece by using a combination of linear interpolation, 2-axis circular interpolation, and trajectory control.
Servo adjustment time is also reduced through multi-axis adjustment, quick tuning, and one-touch tuning.

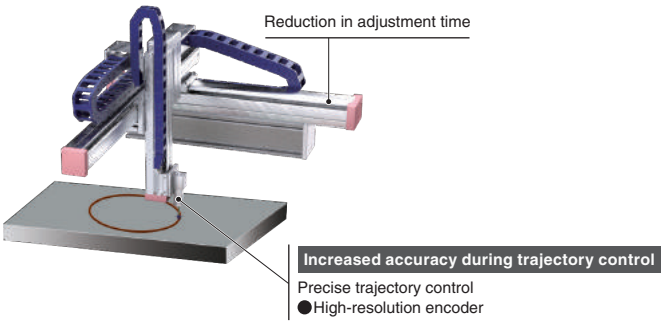

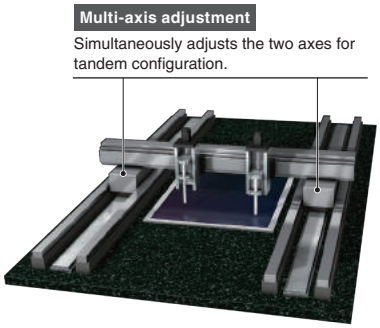

Applications

- Flat panel display (FPD) manufacturing equipment
- Wood processing equipment

Main functions

- High-resolution encoder
- Multi-axis adjustment Future support planned

Servo Adjustment

At machine startup, noise sometimes occurs due to resonance. With the quick tuning function, tuning is performed at servo ON and such noise is minimized.
In addition, MELSERVO-J5 series servo amplifiers offer various other types of servo adjustment functions that allow you to select the function that best suits your equipment.

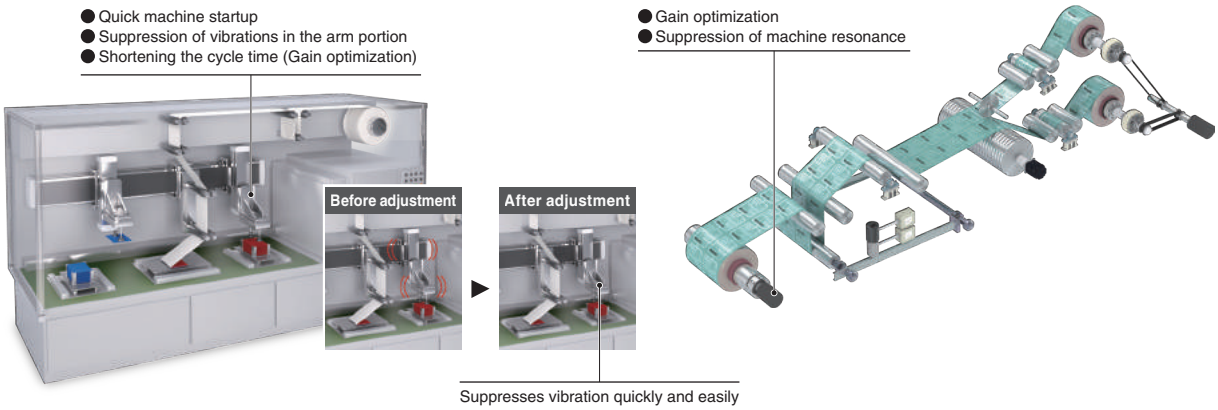

Applications

- Conveyor systems
- Converting machines
- Packing machines
- Robots

Main functions

- Quick tuning
- One-touch tuning
- Machine resonance suppression filter
- Advanced vibration suppression control II

Utilization of IoT Technology

Vast amounts of servo data collected on the shop floor are transmitted to the IT system through the CC-Link IE TSN. The IT system centrally manages the collected data, which enables users to understand the status of the entire line. Use of the CC-Link IE TSN compatible servo system helps to implement IoT technology in your factory.

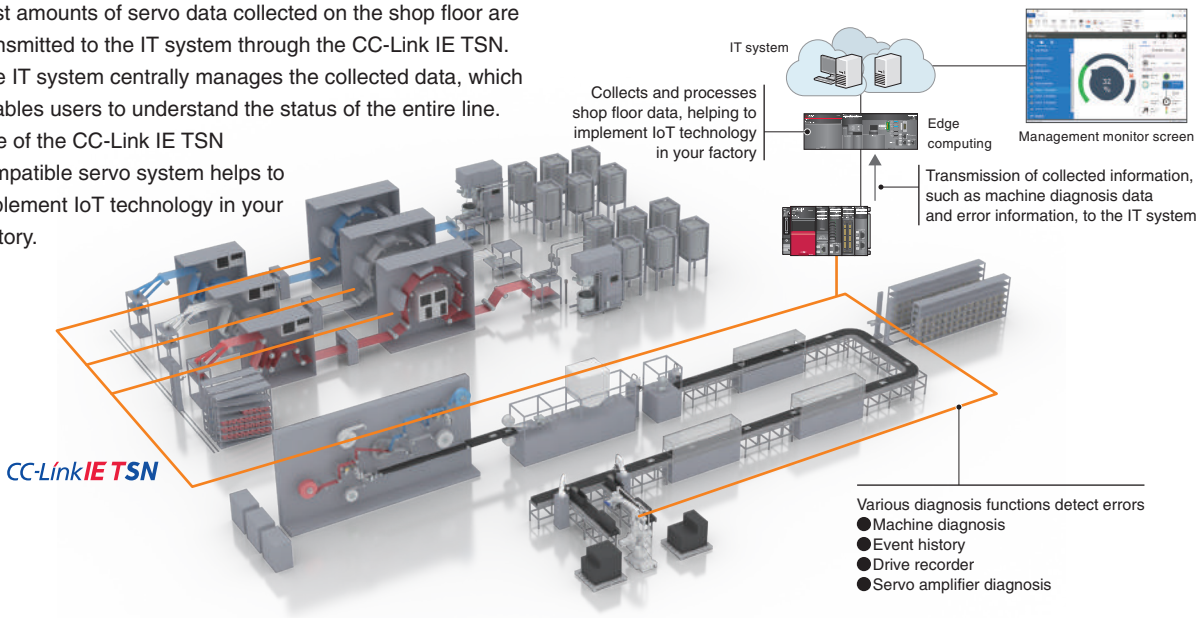

Applications

- Lithium ion battery production lines
- Automotive assembly lines
- Semiconductor manufacturing lines
- Beverage filling machines

Unlock new system capabilities together with CC-Link IE TSN

CC-Link IE TSN
Motion Module

RD78GH Available soon
RD78G



These Motion modules with multiple-core processors enable to configure a high-speed, large system by supporting the CC-Link IE TSN real-time open network.

- Performs positioning control such as linear interpolation using function blocks. The programming is easy: users just need to set positioning data to the function blocks.
- Connects to various modules such as servo amplifiers and I/O modules via CC-Link IE TSN. This connectivity allows you to configure a servo system more flexibly.
- Supports a consistent engineering environment that is capable of handling tasks ranging from system design to debugging and maintenance.

Product Lines



CC-Link IE TSN
MELSEC iQ-R series

RD78GHV Available soon
RD78GHW Available soon

- Maximum number of control axes:
  128 axes/module (RD78GHV)
  256 axes/module (RD78GHW)
- Minimum operation cycle *1: 31.25 µs
- ST language program capacity:
  Built-in ROM max. 64 MB
  + SD memory card

RD78GHV/RD78GHW are designed with a quad-core processor that enables higher-speed control. These Motion modules can be directly programmed to distribute load control with PLC CPUs.
This ensures that performance will not be degraded even when the number of axes is increased.



CC-Link IE TSN
MELSEC iQ-R series

RD78G4/RD78G8
RD78G16/RD78G32
RD78G64

- Maximum number of control axes:
  64 axes/module (RD78G64)
- Minimum operation cycle *1: 125 µs
- ST language program capacity:
  Built-in ROM max. 16 MB
  + SD memory card

RD78G4/RD78G8/RD78G16/RD78G32/RD78G64 are designed with a dual-core processor, and can be programmed to enable various types of control, such as positioning, synchronous, cam, speed, and torque control.

*1. The operation cycle varies by the number of control axes and the models.

System Configuration of Motion Modules

The Motion Module provides functionality equivalent to a CC-Link IE TSN Master/local module *1 and executes motion control while functioning as a master station. This dual functionality results in reduced system costs without sacrificing performance.

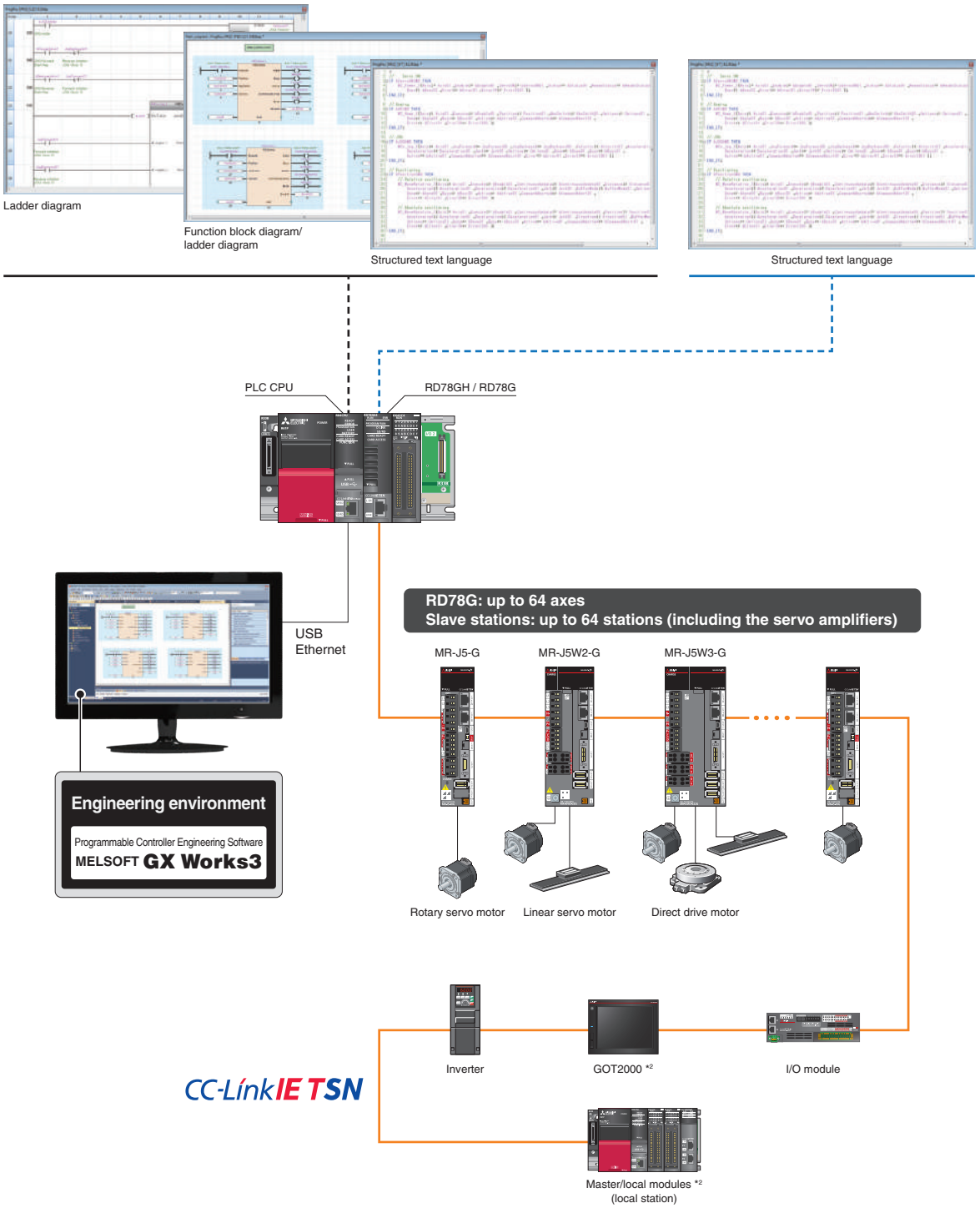

*1. Compared to the master/local module, the Motion modules are not provided with the following functions: sub-master station, safety communications, multi-master configuration, backup/restore function, and data communication function between general stations.
*2. Future support planned

Create new machines together by taking advantage of our innovative IPC environment



SWM78 Motion Control Software performs motion and network control through Visual C++®. To perform control, install the software on an industrial personal computer with a real-time operating system.

Features

- Creates a CC-Link IE TSN servo system by being installed on an industrial personal computer with a real-time operating system.
- Performs various types of motion control, such as positioning, synchronous, and cam control.
- Meets various application needs by utilizing the API library which has the same interface with PLCopen® Motion Control Function Blocks.



MELSOFT EM78 SDK
- SWM78 Motion Control Software
- API library
- EM Configurator2

CC-Link IE TSN
Motion Control Software
SWM78 Available soon

- Maximum number of control axes: 256 axes
- Minimum operation cycle*1: 250 µs
- Programming language: Visual C ++®

*1. The number of controllable axes varies by the operation cycle.

Operating Environment

- Supports INtime (real-time operating system).
- Operates on an industrial personal computer with the Intel I210 Ethernet Controller.

System Configuration of Motion Control Software

MELSOFT EM78 SDK API library adopts the same interface as the internationally standardized PLCopen® Motion Control Function Blocks. By calling the API library, a user program executes motion control.
The API library also boasts increased program readability by utilizing the class library format.

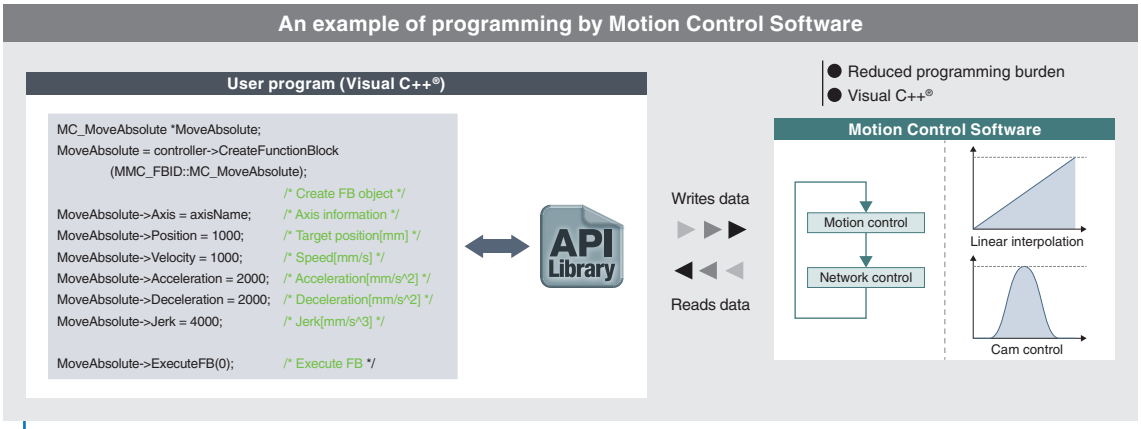

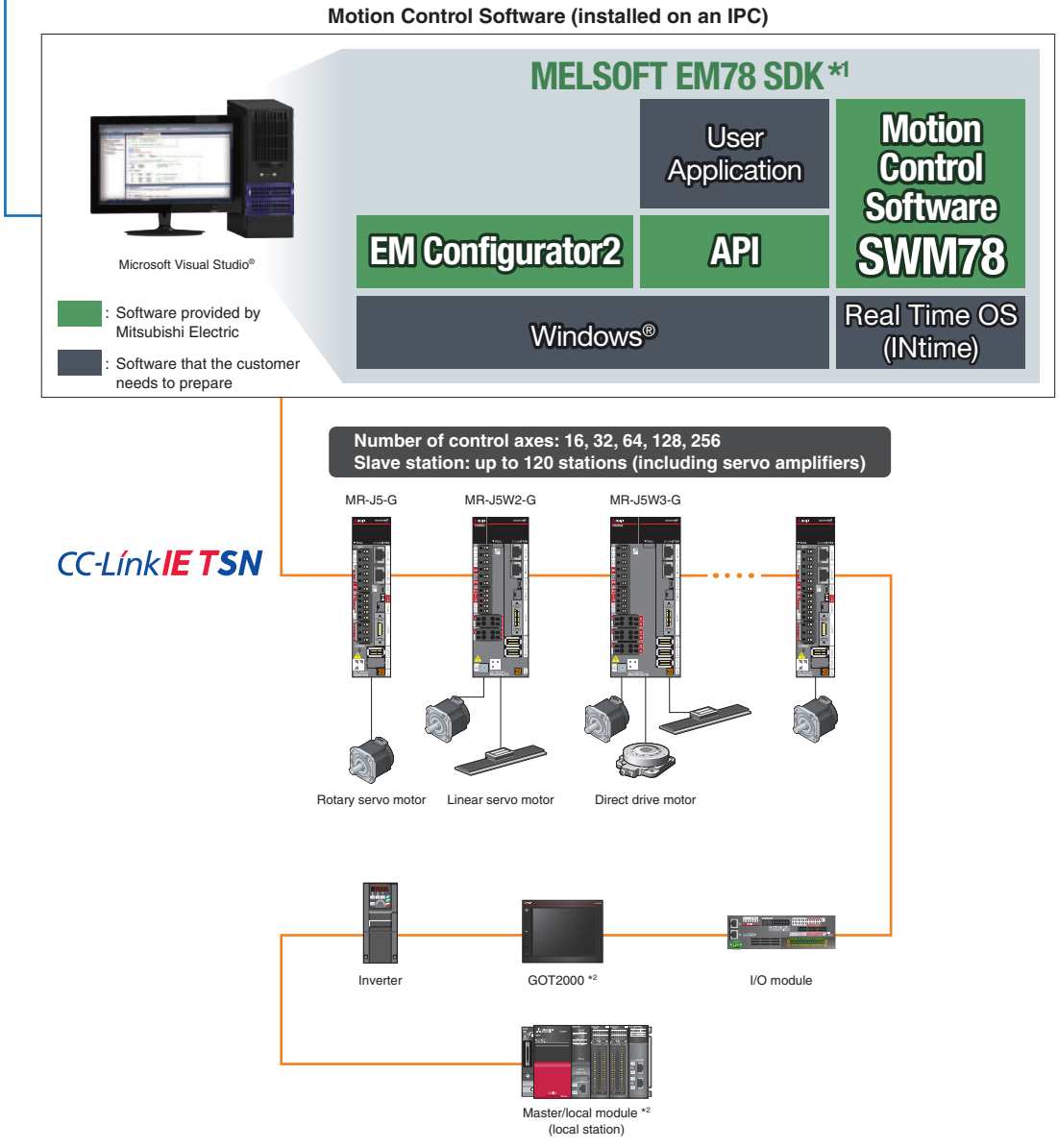

*1. To use Motion Control Software, prepare MELSOFT EM78 SDK and the USB key with license information.
*2. Future support planned

Function List

RD78GH | RD78G | SWM78

	Motion module		Motion Control Software
	MELSEC iQ-R series		
	RD78GH Available soon	RD78G	SWM78 Available soon
Maximum number of control axes	RD78GHV:128 axes RD78GHW:256 axes	RD78G4: 4 axes RD78G8: 8 axes RD78G16: 16 axes RD78G32: 32 axes RD78G64: 64 axes	16 axes/ 32 axes/ 64 axes/ 128 axes/ 256 axes
Minimum operation cycle *1	31.25 [μs]	125 [μs]	250 [μs]
Communications speed	1Gbps		
Command interface	CC-Link IE TSN		
Engineering environment	MELSOFT GX Works3		MELSOFT EM Configurator2
Programming method	PLC CPU: Ladder, FBD/LD, ST language Motion module: ST language		Visual C++®
Control mode	Positioning control, Speed control *2, Synchronous control, Cam control, Torque control *2		
Positioning control	Linear interpolation, Circular interpolation		
Acceleration/ deceleration process	Trapezoidal acceleration/ deceleration, Jerk acceleration/ deceleration, Acceleration/deceleration time fixed method		
Manual control	JOG operation		
Functions that change the control details	Current value change, Torque limit value change, Speed change, Acceleration/ deceleration time change, Target position change		
Homing method	Driver homing method, Data set method		
Auxiliary function	Forced stop, Servo ON/OFF, Hardware stroke limit, Software stroke limit, Event history, Absolute position control, Data logging, Slave emulate		

*1. The minimum operation cycle varies depending on the number of control axes and the model.
*2. These are the functions of Motion modules.

Flexibly Configure a Servo System According to Your Needs RD78GH RD78G SWM78

RD78GH/RD78G Motion modules and SWM78 Motion Control Software perform various types of control, such as single-axis or multi-axis positioning, synchronous, cam, speed, and torque control.

Motion modules

- Two types of Motion modules are available: RD78G for positioning and synchronous control and RD78GH for high-accuracy control.
- Control load distribution among PLC CPUs and Motion modules is possible: the PLC CPUs execute machine control and the Motion modules execute motion control.

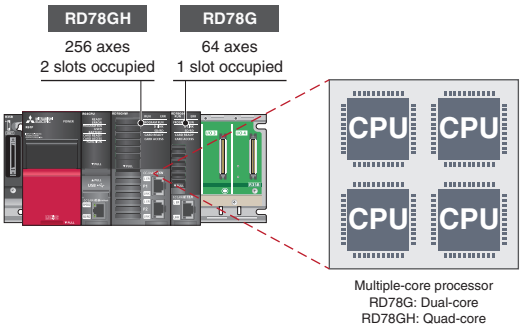

Inter-module synchronization Future support planned

- System expansion is possible by using inter-module synchronization.
- Control load distribution among PLC CPUs and Motion modules is possible, and therefore the number of axes can be increased without sacrificing performance.

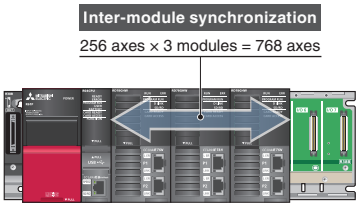

Motion Control Software Available soon

- Motion Control Software performs motion control by being installed on a personal computer with a real-time operating system.
- Both motion control and data analysis can be performed when Motion Control Software is installed on a MELIPC Series industrial-use computer.

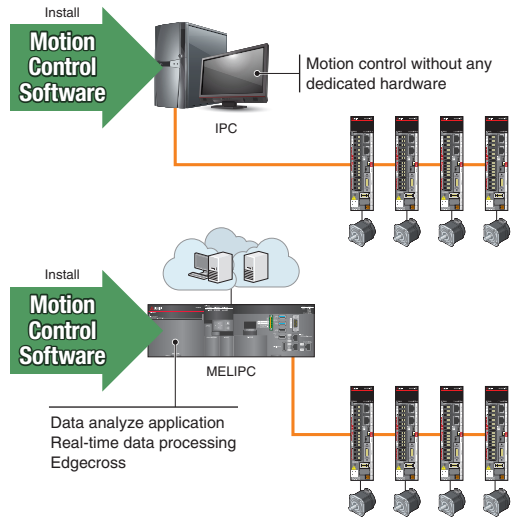

*1. Contact your local sales office when installing Motion Control Software on a MELIPC.

Control Load Distribution Realized by Flexible Programming RD78GH RD78G

Programming using the internationally standardized PLCopen® Motion Control FBs is possible.
Selectable programming languages vary depending on the controllers:

- Motion module: structured text language (ST)
- PLC CPU: ladder diagram (Ladder), function block diagram/ladder diagram (FBD/LD), and structured text language (ST).

Select the controller and programming language according to the necessity of high-speed operation and the complexity of the operation.

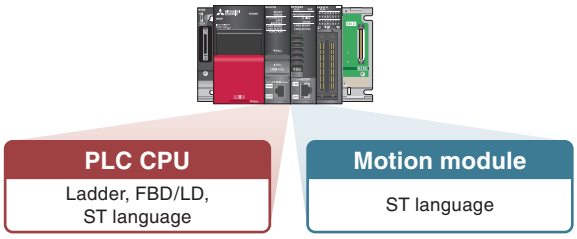

Programming by PLC CPU and Motion Modules

This programming method is perfect for demanding applications which require high-speed, complicated motion operation.

[Processing details]

- The PLC CPU starts Motion module programs.
- The Motion module performs operation of double precision floating-point numbers and polynomials.
- The Motion module performs motion control.

Motion modules can execute complex operations in place of the PLC CPUs. This reduces the operation burden on PLC CPUs and results in a shorter cycle time.

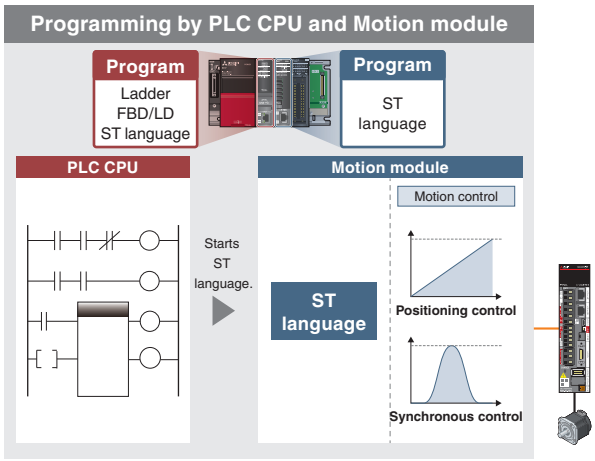

- Control load distribution
- Reduced cycle time

Programming by PLC CPU only

This programming method is perfect for users who prefer to use only PLC CPU programs.
A PLC CPU program starts operation of the Motion module, eliminating the need for users to create another program for the Motion module, reducing programming burden.
The PLC CPU program supports the internationally standardized PLCopen® Motion Control Function Blocks, and therefore people other than the program designer can understand the programming, leading to reduced design and maintenance time.

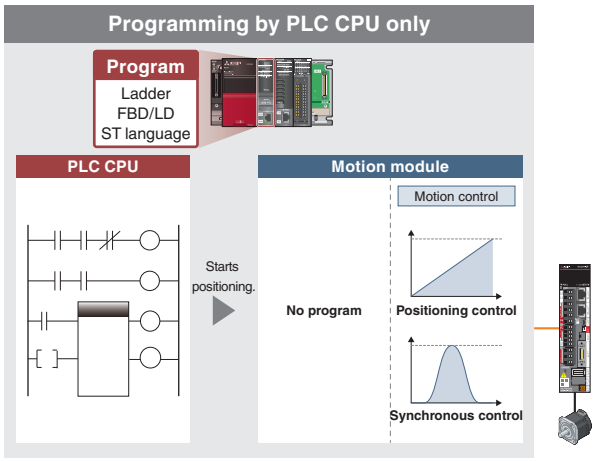

- Reduced programming burden

Starting a Program

RD78GH RD78G

An Example of Starting a Program by PLC Ready Signal

The Motion module program automatically starts based on the starting condition, such as when PLC Ready signal turns ON.

- A variety of program execution methods are available: initial, normal, fixed scan, and standby. This provides more flexibility in programming.
- Programming language: structured text language.
- High-speed processing is possible because the Motion module independently executes operation.

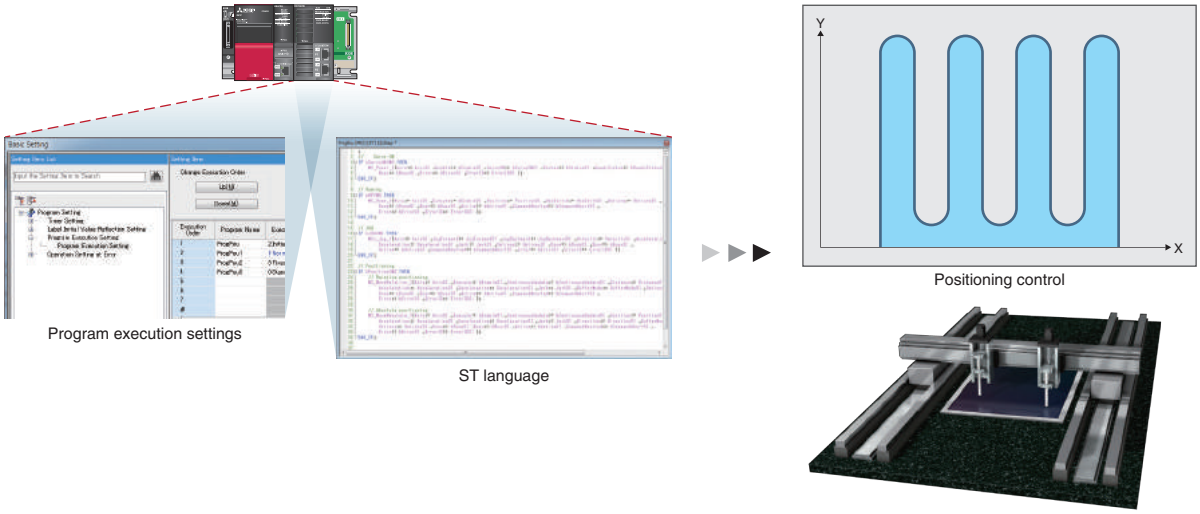

An Example of Starting a Program from PLC CPUs

Positioning operation is easily executed just by creating an interpolation axes group and starting the linear interpolation control FB. The selectable programming languages are as follows: ladder diagram (Ladder), function block diagram/ladder diagram (FBD/LD) and structured text (ST).

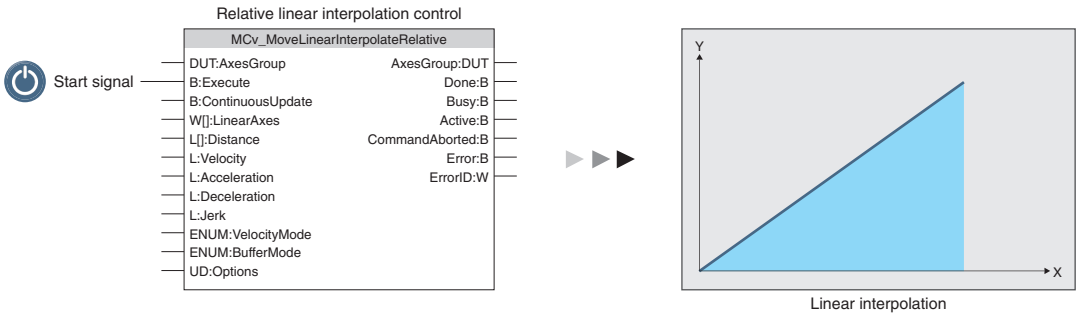

Positioning Control

RD78GH RD78G SWM78

Two types of positioning control are available: single-axis and multi-axis positioning control.
This variety allows you to meet various control needs.

Item	Control types	
Single-axis control	Positioning	Absolute positioning
		Relative positioning
	Speed-position switching	Absolute speed-position switching Future support planned
		Relative speed-position switching Future support planned
	Homing	
	JOG operation	

Item	Control types	
Multi-axis control	Linear interpolation	Absolute linear interpolation
		Relative linear interpolation
	Circular interpolation	Absolute circular interpolation
		Relative circular interpolation
	Helical interpolation	Absolute helical interpolation Future support planned
		Relative helical interpolation Future support planned
	Multi-axis path control	Future support planned

Main Control

Linear interpolation

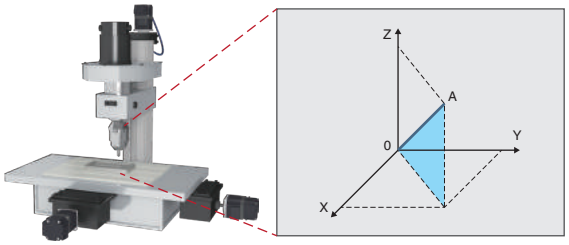

Speed-position switching *1

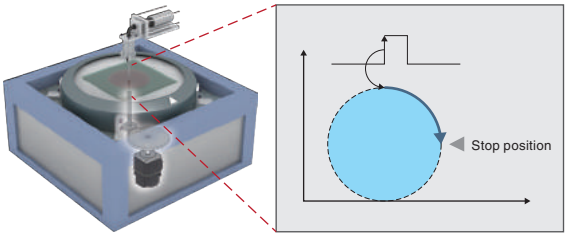

Circular interpolation

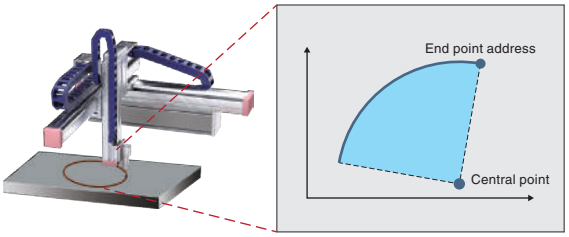

Helical interpolation *1

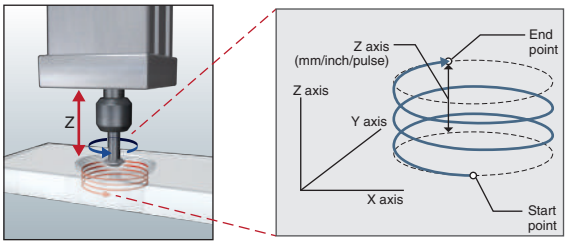

Multi-axis path control *1

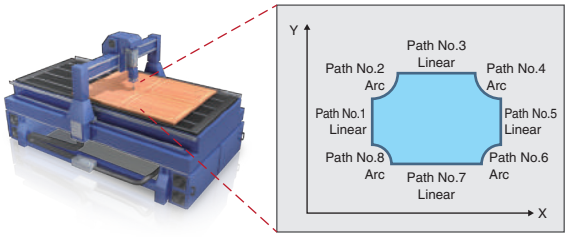

*1. Future support is planned for these control types.

Acceleration/Deceleration Methods

RD78GH RD78G SWM78

Three types of acceleration/deceleration methods are available: trapezoidal acceleration/deceleration, jerk acceleration/deceleration, and acceleration/deceleration time fixed.

Trapezoidal acceleration/deceleration

After starting, maximum acceleration is maintained until the target speed is reached.
For example, when a vehicle loaded with a workpiece accelerates suddenly, the workpiece will swing back and forth due to the impact of the sudden acceleration.
To reduce impacts and vibrations in a case such as this, the vehicle must accelerate at a slower rate.
The speed creates a trapezoidal shape.

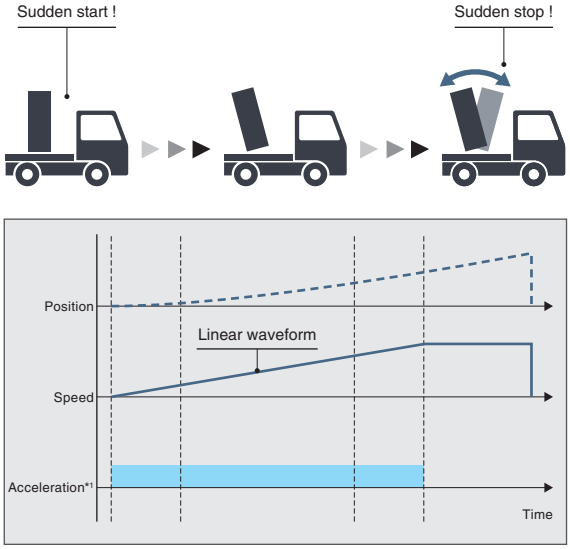

Jerk acceleration/deceleration

The acceleration changes gradually.
For example, when a vehicle loaded with a workpiece accelerates gradually, the load will not swing back and forth after acceleration.
The jerk is maintained during acceleration. When the vehicle has almost reached the target speed, the jerk is decelerated. Adjusting jerk in this way achieves smooth acceleration/deceleration while also shortening the time it takes to reach the target speed.
The speed creates a S-curve shape.

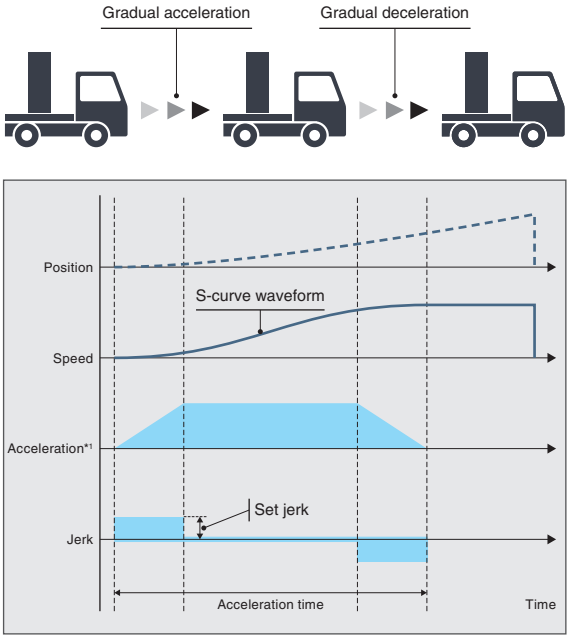

Acceleration/deceleration time fixed method

This method executes acceleration/deceleration based on the time specified, regardless of the commanded speed.

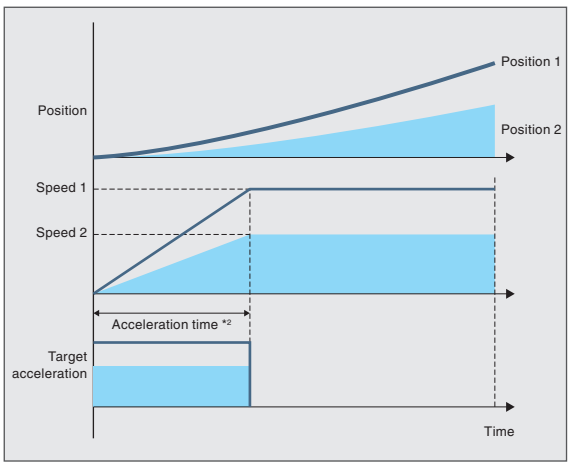

*1. Input acceleration.
*2. Specify acceleration time.

High Flexibility in Synchronous Control

RD78GH RD78G SWM78

Synchronous control is performed using function blocks that operate as software-based mechanical modules such as gear, shaft, clutch, speed change gear, and cam.

- The number and the combination of the synchronous modules are flexibly selected, achieving optimized operation.
- The following two types of cam data are available: cam data and cam data for a rotary knife
- Complex cam control is possible by flexibly switching cams.
- Positioning and synchronous control can be performed together in the same program.
- Cam for a rotary knife can be easily created in MELSOFT GX Works3 or by using function blocks.

[An example of packing machine program (FBD)]

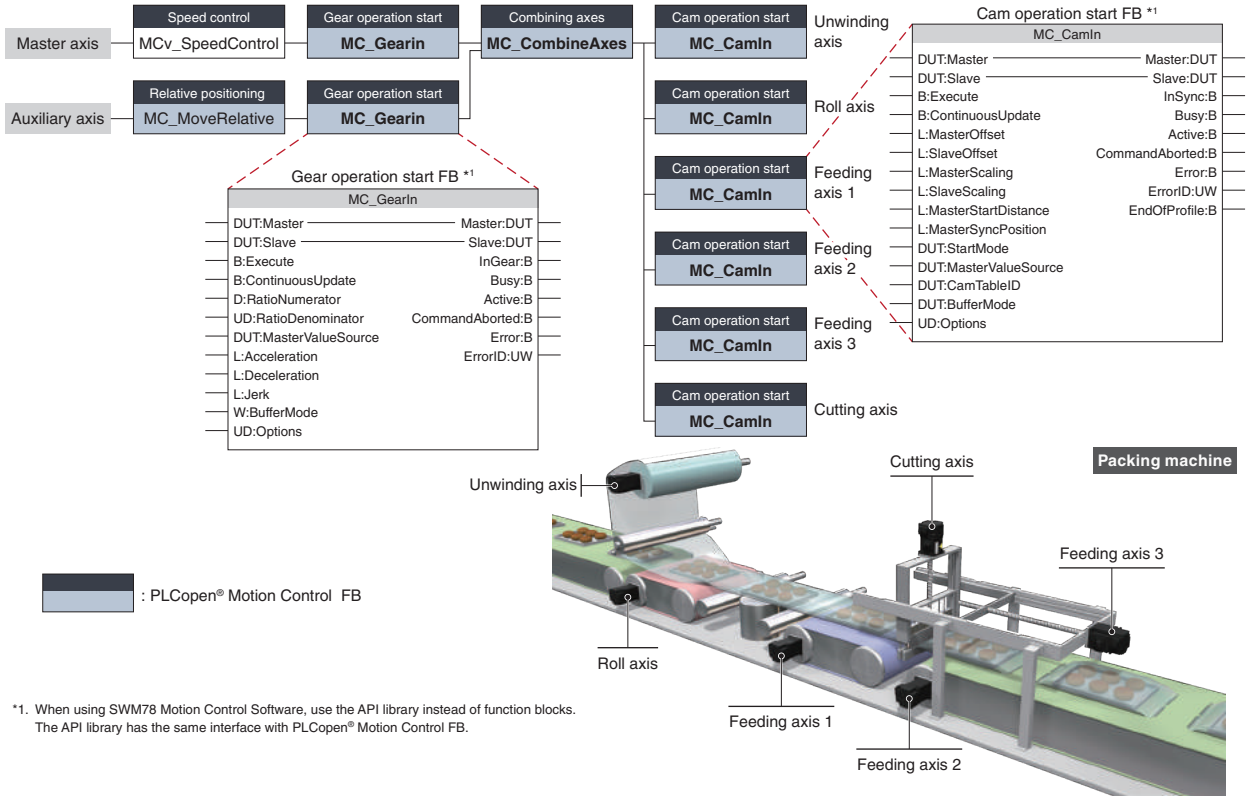

*1. When using SWM78 Motion Control Software, use the API library instead of function blocks. The API library has the same interface with PLCopen® Motion Control FB.

[FBD time chart]

This program synchronizes all the axes, from the cutting axis through the unwinding axis, with the master axis. The following shows the time chart of the film cutting operation.

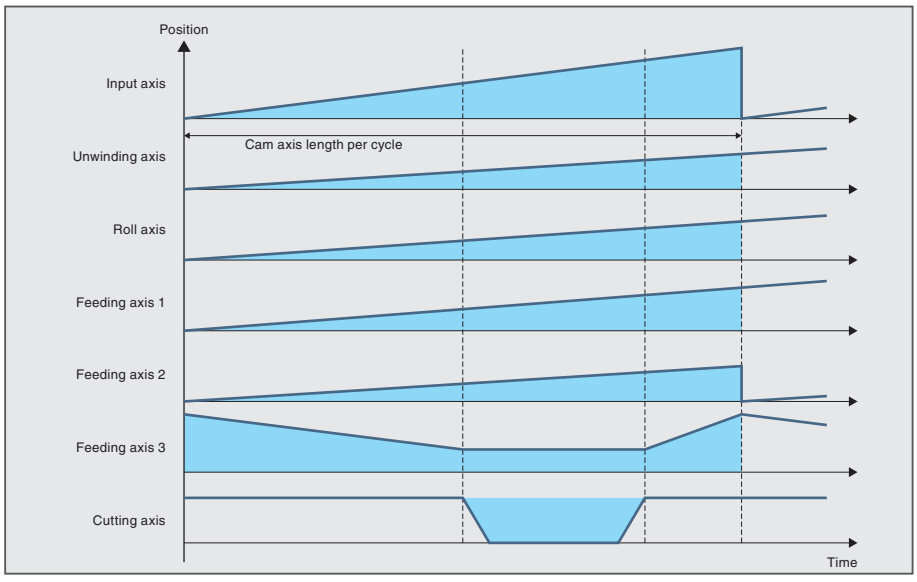

Cam Control

RD78GH RD78G SWM78

Changing Cam No.

The cam being executed can be flexibly switched to another cam, and cam control can smoothly switch to positioning control without stopping the servo motor.

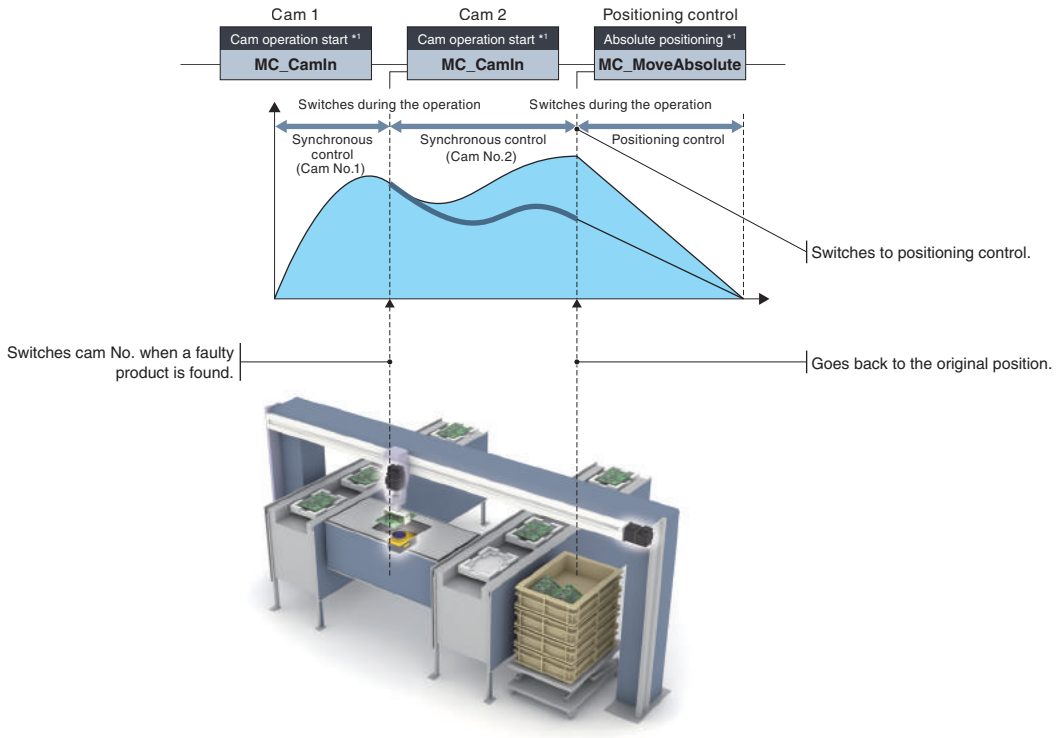

*1. When using SWM78 Motion Control Software, use the API library instead of function blocks. The API library has the same interface with PLCopen® Motion Control FB.

Cam Data

RD78GH RD78G SWM78

Create operation profile data*1 (cam data) according to your application. The created cam data is used to control output axis.
The following three cam operations are available: linear operation, two-way operation, and feed operation. Choose one according to your application.

*1. "Operation profile data" is a general name for waveform data, which is used for various applications.

Operation Profile Data (Cam Data)

Linear operation

The cam pattern is a linear line.
This pattern is used for a ball screw and a rotary table.

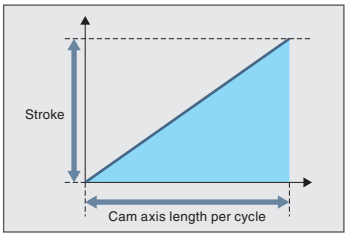

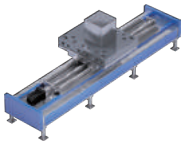

Ball screw [Unit: mm]

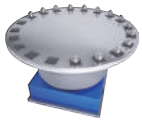

Rotary table [Unit: degree]

Two-way operation

The beginning and the end of the cam pattern are the same.
Mechanical cams fall into this category.

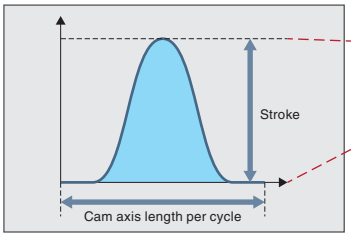

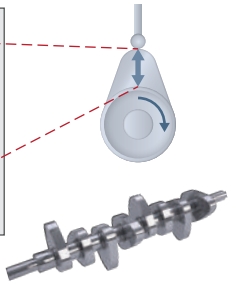

Crankshaft

Feed operation

The beginning and the end of the cam pattern differ.
This pattern is used for fixed-amount feed operations and intermittent operations.
Set the end point for the feed operation to a position of your choice.

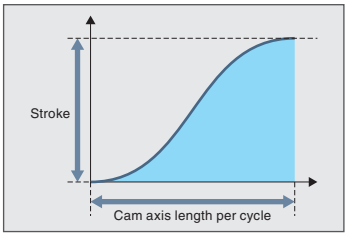



Belt conveyor

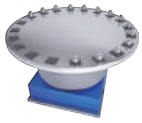

Rotary table [Unit: degree]

Application examples

[Machine with all axes synchronized]

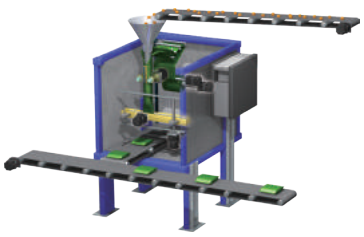

All the axes of the machine are in synchronization.

[Machine with only certain of the axes synchronized]

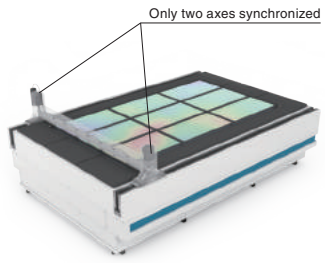

Only two axes are synchronized.
The other axes perform positioning operation while the two axes execute synchronous control.

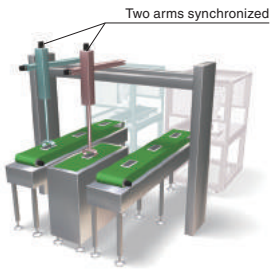

The two arms can avoid interference by synchronizing with each other, shortening the cycle time.

A Variety of Options to Create Operation Profile Data RD78GH RD78G SWM78

The operation profile data is divided into the following two types of cam data.

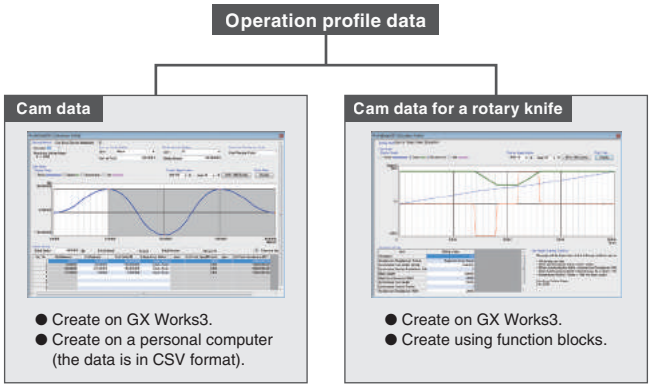

Importing Operation Profile Data in CSV Format

The operation profile data in a CSV format on a personal computer can be imported directly to a Motion module.

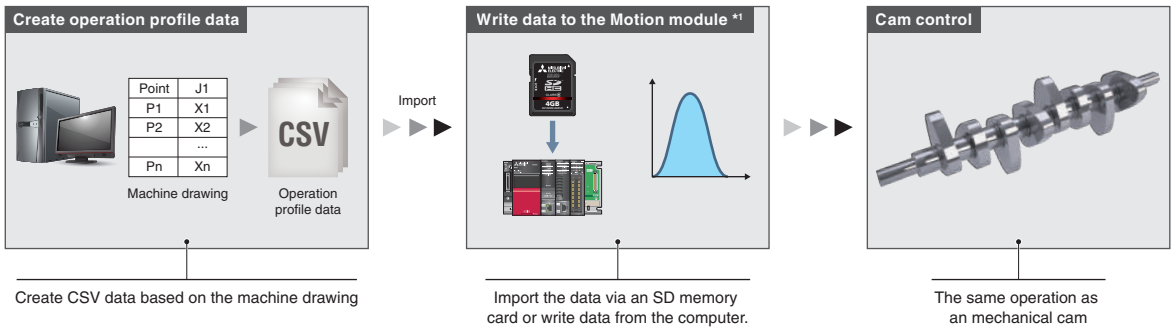

*1. When using SWM78 Motion Control Software, write data to an industrial computer.

Easy Cam Creation for a Rotary Knife

Cam data for a rotary knife is automatically generated with MELSOFT GX Works3 or by using a function block.

- (Using function block) The operation profile data (cam data) is created just by setting the sheet length and sheet synchronization width, etc., to the function block and starting it.
- (Using MELSOFT GX Works3) Set the sheet length and sheet synchronization width, etc., which automatically generates cam data for a rotary knife.

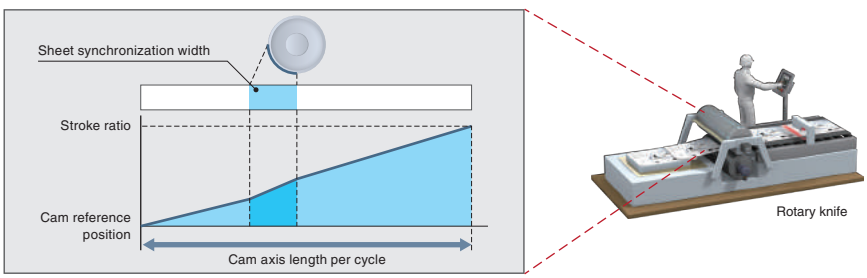

Servo Amplifier Control Mode

RD78GH RD78G

The servo amplifier has three control modes: position, speed, and torque control modes.

[Control mode]

Position control mode: Accurately move to the target position
(Speed control that includes position loop)
Speed control mode: Drive at the specified speed
(Speed control that does not include position loop)
Torque control mode: Drive at the specified torque

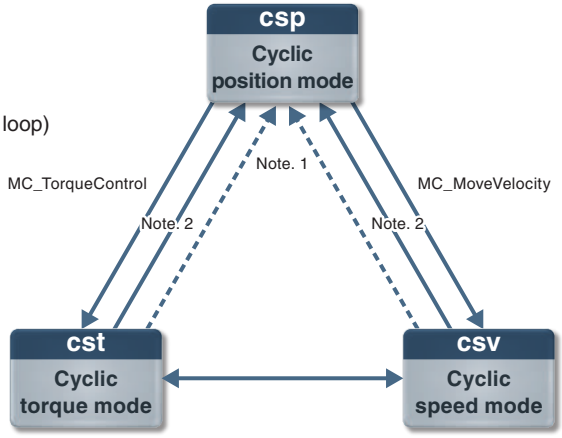

Note 1: Transits at stop completion or error occurrence.
Note 2: Transits when Aborting or Buffered is executed to an instruction other than MC_MoveVelocity/MC_TorqueControl.

Selectable Speed Control to Best Fit Your System Needs

RD78GH RD78G

Two types of speed control are available: speed control that includes position loop and speed control that does not include position loop.

Speed Control That Does Not Include Position Loop

- Control mode setting: Speed control mode
- Minimizes speed deviation by flexibly responding to speed changes, such as those that occur when the load changes.
- Suitable for machines which keep driving the motors at constant speed, such as a wind/unwind machine.
- Uses the function block "MC_MoveVelocity".

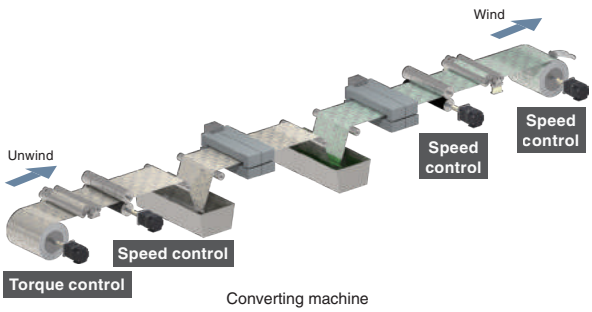

Converting machine

Speed Control That Includes Position Loop

- Control mode setting: position control mode
- Suitable for operations that repeatedly switch between speed and position control.
- Uses the function block "MCv_SpeedControl".

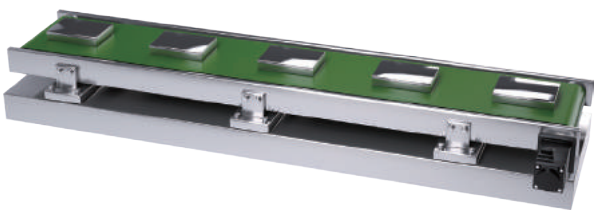

Belt conveyor

Torque Control

RD78GH RD78G

Torque Control Mode

The motor drives following the commanded torque and keeps the torque constant and stable.
When the load is light and the speed increases to the set limit, the torque control switches to speed control.

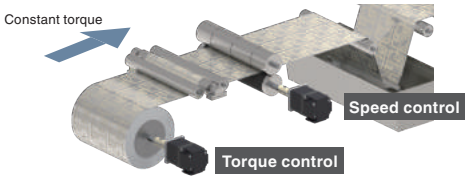

Application example

[Unwinding axis of converting machines]
Torque control unwinds film at constant tension to prevent wrinkling in the film.
The tension can be kept constant by sequentially controlling the torque commands.
This type of control is perfect for unwinding machines that need to keep the tension of unwound materials constant.

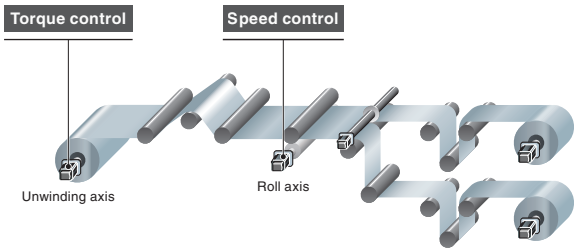

Tightening and Press-Fit Control Mode

Future support planned

When using this mode, you can switch from positioning control to torque control smoothly without stopping the servo motor.

- The absolute position is always kept, and therefore positioning after torque control is smoothly executed.
- Positioning control is smoothly switched to torque control without stopping the servo motor.

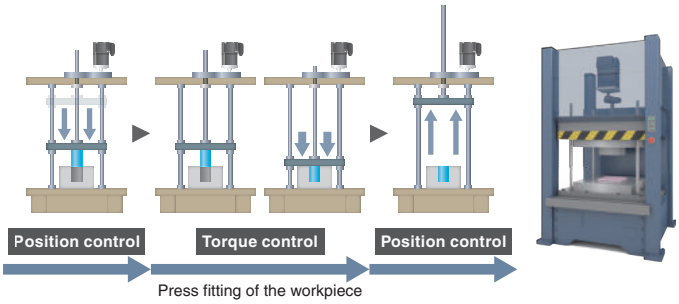

Application example

[An example of tightening and press-fit control]
This control mode applies to a variety of machines, such as bonding, press-fit, punching, and clamping machines.

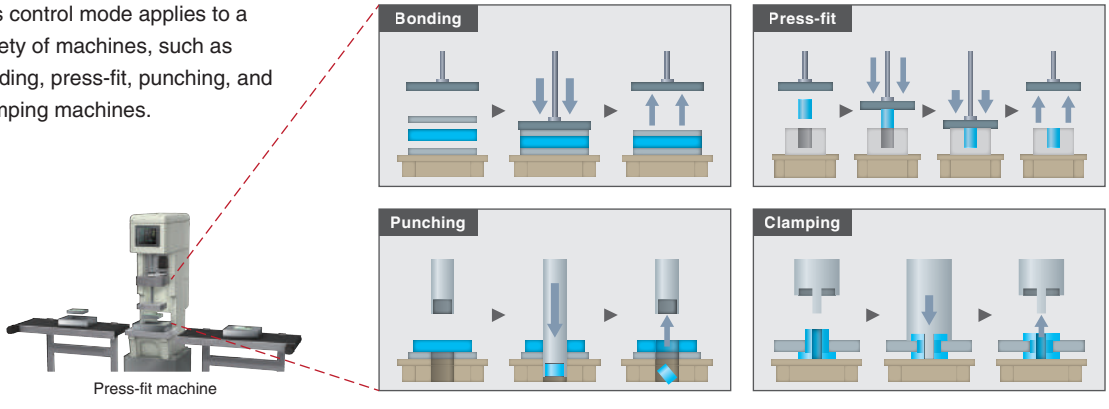

Touch Probe Function (Mark Detection Function)

Future support planned | RD78GH | RD78G | SWM78

This function latches data responding to a trigger signal input.
The trigger signal can be inputted to the controller using a remote I/O.

Compensation Based On Registration Marks

1. The registration marks are detected with the sensor.
2. The current position is latched.
3. The compensation amount is calculated from the latched data.
4. The deviation is compensated by the calculated amount using input axis 2.

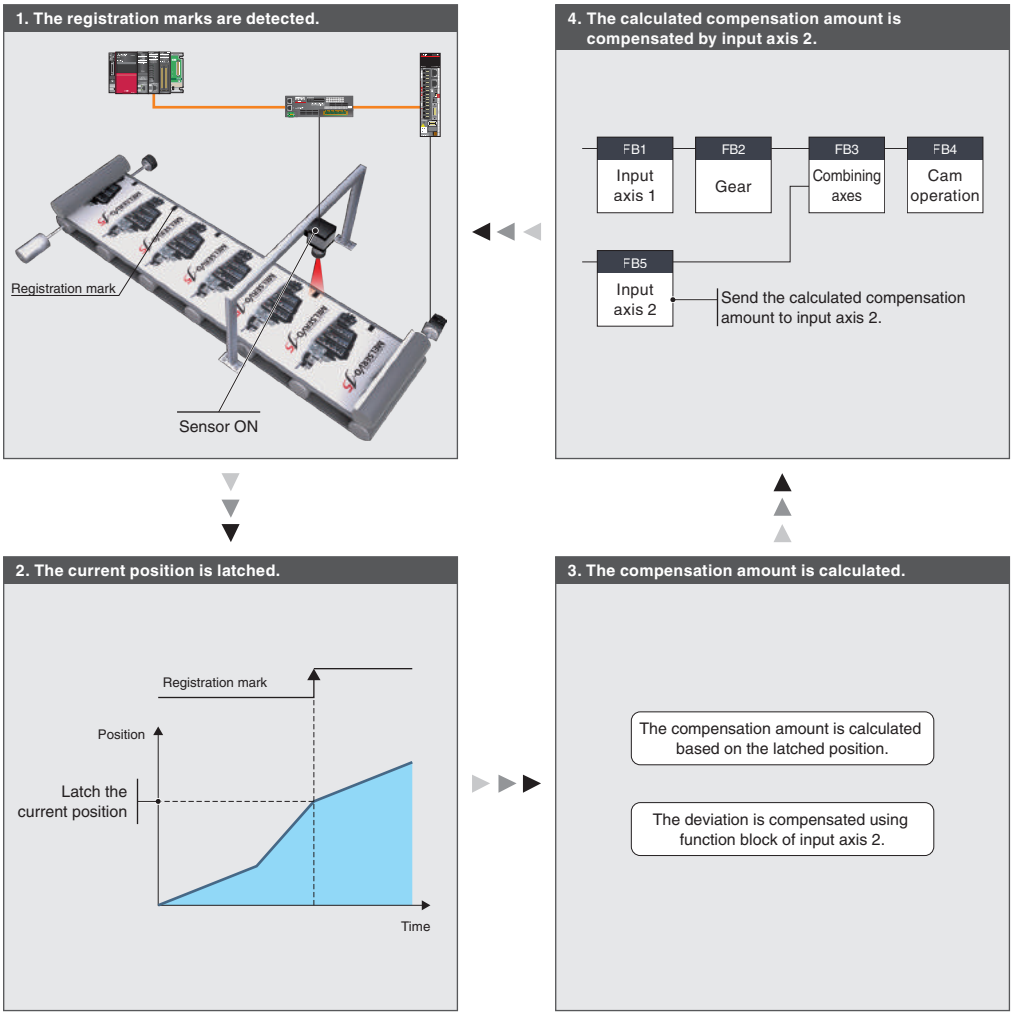

* When using SWM78 Motion Control Software, use the API library instead of function blocks. The API library has the same interface with PLCopen® Motion Control FB.

GX Logviewer Enhances Waveform Display

RD78GH RD78G SWM78

The graph data of both PLC CPUs and servo system controllers can be viewed on a single tool, GX Logviewer. This tool helps you efficiently analyze and display data from two different controllers. The state of the Motion modules can be sampled offline.

Data Logging Function (Offline)

The function performs data logging by a specified time interval based on the logging data (trigger condition, data collection) written to the Motion system from the engineering tool. The results are saved as a data logging file.
Up to 10 data settings can be simultaneously logged for the Motion system.

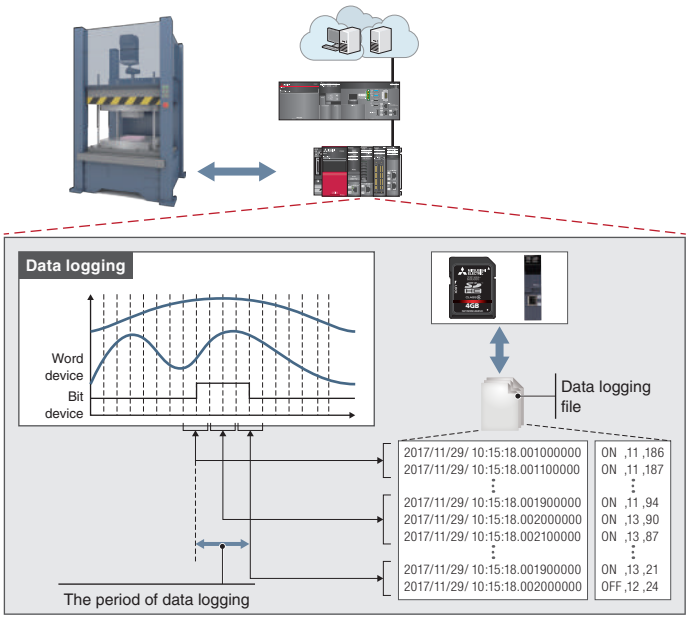

* When using SWM78 Motion Control Software, use any given disk drive of an industrial computer instead of an SD memory card.

One software, many possibilities

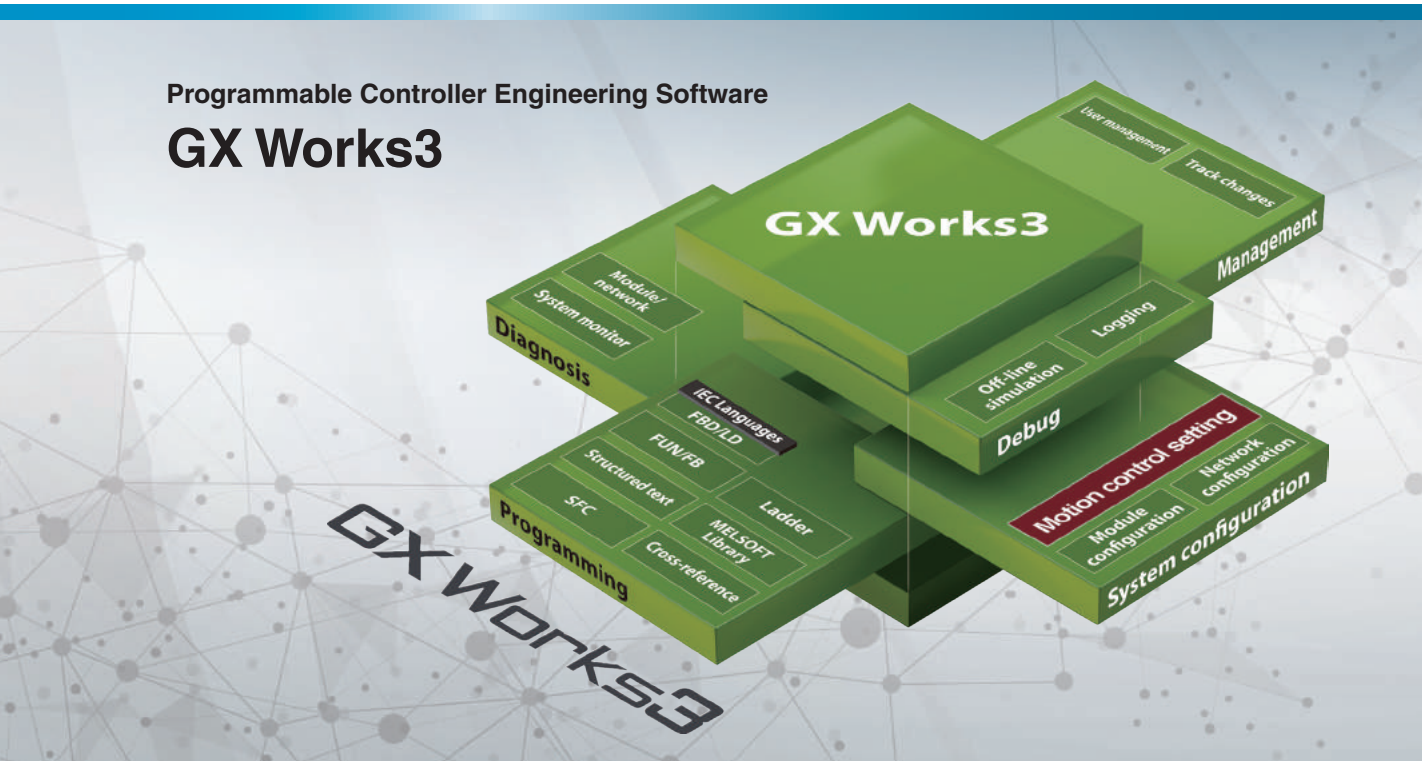

MELSOFT GX Works3 has a variety of features which help users create programs and conduct maintenance more flexibly and easily. This software includes motion control setting to support all Motion module development stages - from setting parameters to programming, debugging, and maintenance.

Development Environment Designed for Ease of Use

This all-in-one software covers all aspects of the product development cycle, resulting in boosted efficiency in programming while also improving user-operability by providing a common interface across all the phases.

System Design → Programming → Debug → Maintenance

System Design

- Network configuration settings
- Automatic detection of network configuration

Programming

- Easy programming in ST language
- More intuitive programming, which eliminates the need to remember devices or buffer memory addresses
- Easy access to axis information
- Operation profile data

Debug

- Various monitor functions, such as axis monitor, ST language program monitor, and event history.

Maintenance

- Various monitor functions, such as axis monitor, ST language program monitor, and event history

System Design | Programming | Debug | Maintenance

Network Configuration Settings

[Network configuration settings]

● Intuitive network settings with drag-and-drop operations and a graphical screen view

[Automatic detection]

● By clicking the [Connected/Disconnected Module Detection] button, the connection status of slave devices is automatically detected and the CC-Link IE TSN configuration screen is generated.

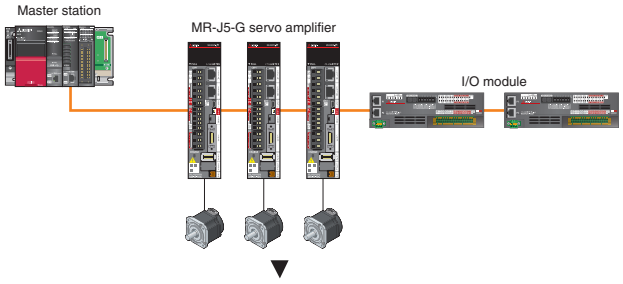

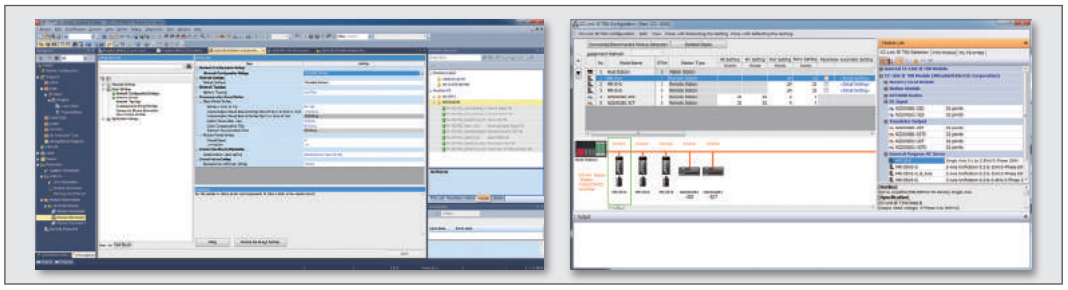

System Design | Programming | Debug | Maintenance

Easy Programming Through Structured Text Language

● Structured text programs are composed of function blocks, increasing program readability.
● Modularization of the programs increases their reusability.
● The consistent, common operability on a single engineering tool improves usability further.
● A wide selection of programming elements in the MELSOFT Library contributes to reducing programming time.
● The program is created through by dragging & dropping programming elements, which simplifies the programming process.

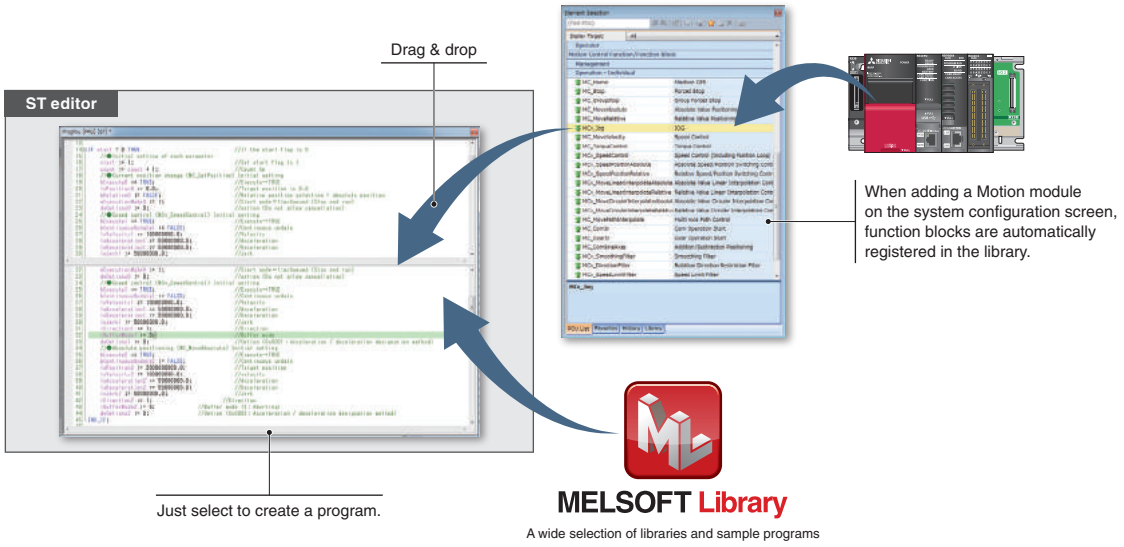

More Intuitive Programming

- The control axes of the Motion modules and I/O signals are managed as label variables.
- Parameters of slave devices can also be accessed.
- The global labels created in the Motion module project can be referred to by PLC CPUs. Future support planned

[Global label settings]

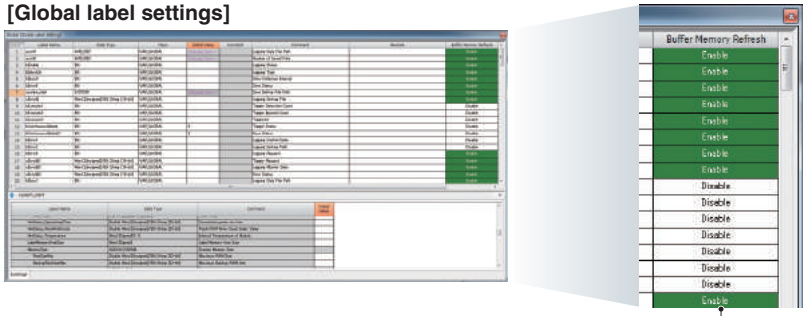

Settings to make the global labels become available for PLC CPU

[PLC CPU programs]

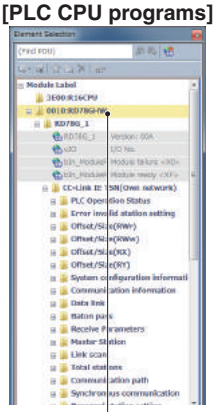

The global labels are registered as a module label in the programming element list window.

- Use of variable names avoids common mistakes such as setting the wrong device No. or using the same device No.
- Labels boost program readability and help you create easy-to-understand programs.
- Easily reuse programs to improve work efficiency.

Axis Information is Easily Accessible

- Axis label variables can be used as an argument to refer axes in positioning function blocks.
- IntelliSence function reduces programming mistakes.
- Access by variable names increases readability.

[Structured text editor]

```
18    //●Current position change (MC_SetPosition) Initial setting
19    bExecute0 := TRUE;                          //Execute→TRUE
20    lePosition0 := 0.0;                         //Target position is 0.0
21    bRelative0 := FALSE;                        //Relative position selection = absolute position
22    wExecutionMode0 := 1;                       //Start mode=1:mcQueued (Stop and run)
23    dwOptions0 := 0;                            //option (Do not allow cancellation)
24    Axis0001.Md.
25    //●Speed co
26    bExecute1 :=
27    bContinuousU
28    leVelocity1
29    leAccelerati
30    leDecelerati
31    leJerk1 := 5
32    iDirection1
33    iBufferMode1
34    dwOptions1 :                                                    ration / deceleration desig
35
36
37
38
39
```

AccelerationLimit	LREAL	Acceleration Limit Value
AccelerationOverride	LREAL	Acceleration Override Coefficient
AccelerationZeroBehavior	INT	Operation Selection at Start Accelera...
Analyzing	BOOL	Analyzing
AutoDeceleration	BOOL	Automatically Decelerating
AxisName	WSTRING(127)	Axis Name
AxisStatus	INT	Axis Status
BufferingFBs	INT	Number of Buffering FBs
CmdInPos	BOOL	Command In-position
CmdInPos_Width	LREAL	Command In-position Width

Setting...

System Design Programming Debug Maintenance

Operation Profile Data with Simple Settings

Operation profile data, such as cam data and cam data for a rotary knife, is easily created.

- The cam graph can be flexibly and easily created through drag & drop. The waveform is changed according to the pointer's movement.
- Stroke, speed, acceleration, and jerk can be set while monitoring the changes on the graph.
- By setting "5th Curve (Adj)" for "Interpolation Method", the speed on a section border becomes smooth.
- Operation profile data for a rotary knife can be automatically generated by settings sheet length, synchronization width, cam resolution, etc.
- The created operation profile data can be checked on the list.

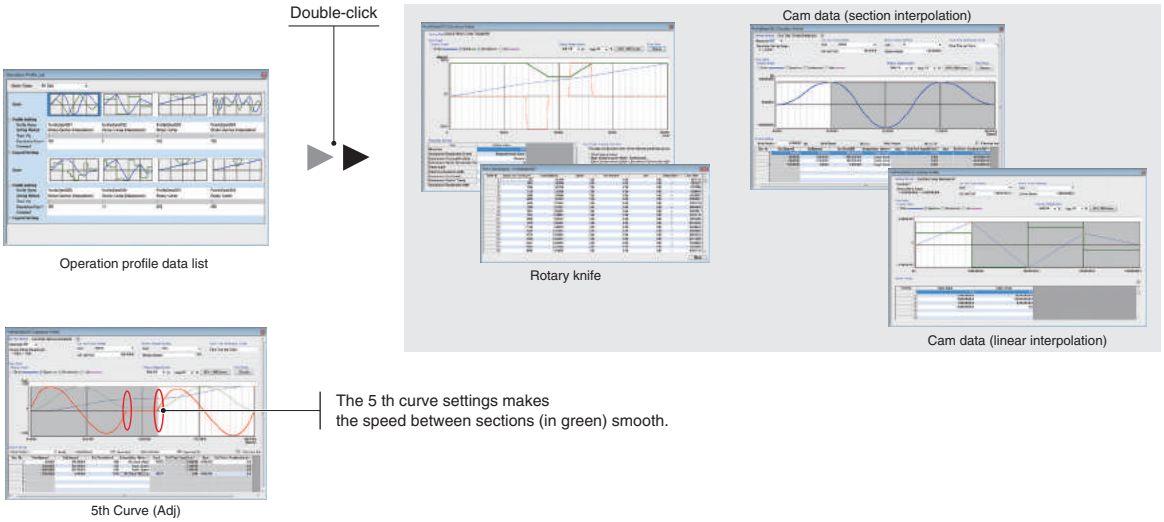

System Design Programming Debug Maintenance

A Variety of Monitor Functions Make Troubleshooting Easy

Improve debug efficiency by customizing monitor items according to your machine.

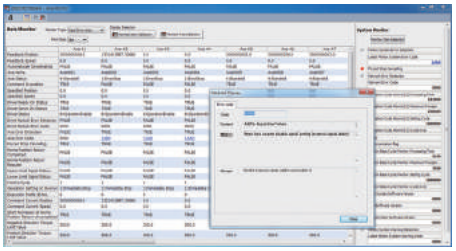

Axis monitor

Debugging can be executed through both the program monitor and the watch window by using the common interface.



ST language program monitor

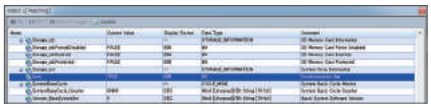

Watch window

Event history lists information about executed operations and errors that have occurred on each module in chronological order, which helps to conduct troubleshooting.

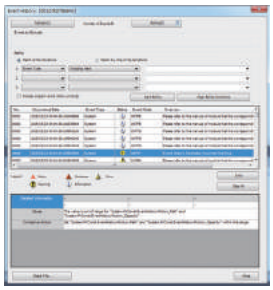

Driving a wider range of motors with more flexible options

Servo amplifiers

MITSUBISHI ELECTRIC SERVO SYSTEM
MELSERVO-J5





CC-Link IE TSN
MR-J5-G

Support Ethernet-based CC-Link IE TSN, featuring high-speed, large-capacity communication (1 Gbps). A command communication cycle of ≥ 31.25 µs and speed frequency response of 3.5 KHz enable advanced motion control.



CC-Link IE TSN
MR-J5W2-G

Drive a maximum of two servo motors. This simplifies wiring, saves energy, and enables a compact machine at a lower cost.

Product Lines

Servo amplifier

●: Supported ○: Future support planned –: Not supported

Model	Power supply specifications (Note 1)	Command interface	Compatible servo motors			
			Rotary	Linear	Direct drive	
MR-J5-G	200 V AC	CC-Link IE TSN	●	●	●	
	400 V AC		○	○	–	
MR-J5W2-G	200 V AC		●	●	●	
MR-J5W3-G	200 V AC		●	●	●	
MR-J5-A	200 V AC	Pulse train/Analog voltage	●	●	●	
	400 V AC		○	○	–	

Notes: 1. 200 V AC servo amplifiers are compatible with DC power supply input as standard.

Simple converter (option)

Model	Power supply specifications	Capacity [kW]	Connectable servo amplifiers	Note
MR-CM3K	200 V AC	3	1 to 6 units	Compatible with MR-J5-G/MR-J5W2-G/MR-J5W3-G/MR-J5-A.

Designed for an ambient temperature of up to 60 ˚C.

Replaceable cooling fan

Enhanced visibility

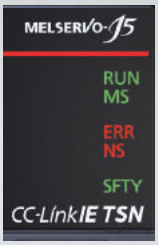

Input and output are distinguished by color.





CC-Link IE TSN

MR-J5W3-G

Drive a maximum of three servo motors. This simplifies wiring, saves energy, and enables a compact machine at a lower cost.



General purpose interface-compatible

MR-J5-A

Enable position control by pulse train command and speed/torque control by analog voltage command. The maximum command pulse frequency is 4 Mpulses/s.



Simple converters

MR-CM

Utilizing a common bus connection conserves energy through the efficient use of regenerative power. Wiring can be simplified and installation space can be saved by reducing the number of molded-case circuit breakers and magnetic contactors.

: Future release planned

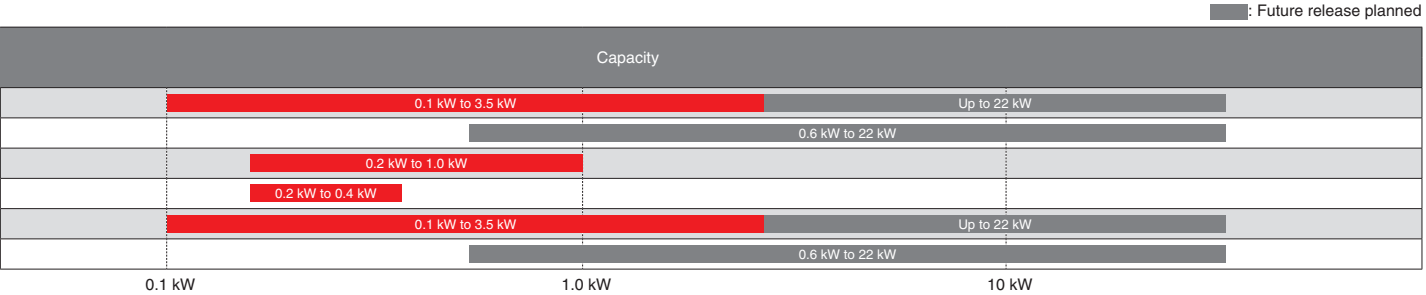

Tuning Functions

Use the tuning methods that are optimal for your machines.

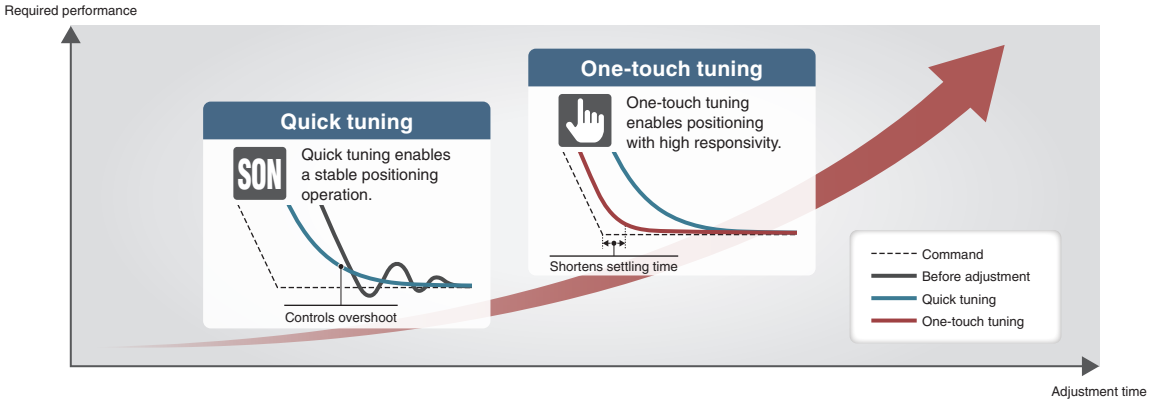

Quick Tuning

NEW

This function automatically performs easy-to-use auto tuning that controls vibration and overshoot just by turning on the servo-on command. Before normal operation, the servo amplifier sets speed loop gain and machine resonance suppression filters in 0.3 seconds by inputting torque to the servo motor automatically. After completing the setting, the servo amplifier starts operation normally.

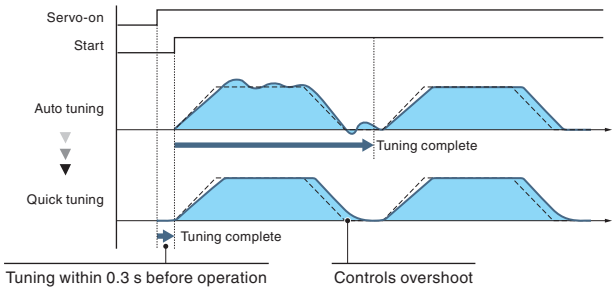

One-Touch Tuning

Enhanced functions

This function automatically completes servo gain adjustment according to the mechanical characteristics and reduces the settling time just by turning on the one-touch tuning. The servo gain adjustment includes the machine resonance suppression filter, advanced vibration suppression control II, and the robust filter. Controlling overshoot and vibration is improved, maximizing your machine performance.

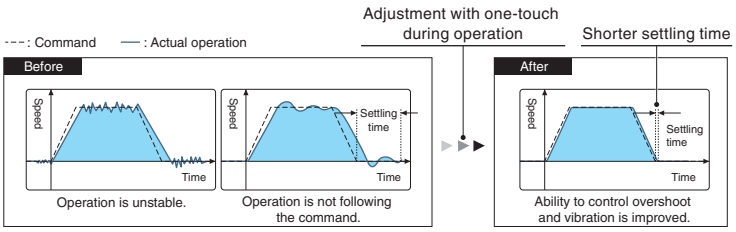

Advanced Vibration Suppression Control II

This function suppresses two types of low frequency vibrations, owing to vibration suppression algorithm which supports three-inertia system. This function is effective in suppressing residual vibration with relatively low frequency of approximately 100 Hz or less generated at the end of an arm and in a machine, enabling a shorter settling time. Adjustment is easily performed on MR Configurator2.

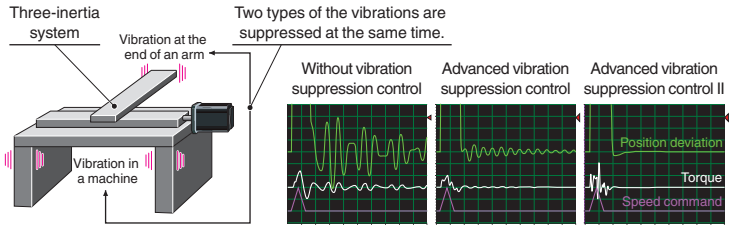

Command Notch Filter

Enhanced functions

The frequency can be set close to the machine vibration frequency because the command notch filter has an applicable frequency range between approximately 1 Hz and 2000 Hz.

Machine Resonance Suppression Filter

Enhanced functions

The expanded applicable frequency range is between 10 Hz and 8000 Hz. Five filters are simultaneously applicable, improving vibration suppression performance of a machine. The machine resonance frequency is detected by the machine analyzer function in MR Configurator2.

Reduced Energy and Maximized Space with Simplified Wiring

Simple Converter MR-CM

NEW

Utilizing a common bus connection conserves energy through the efficient use of regenerative power. Wiring can be simplified and installation space can be saved by reducing the number of molded-case circuit breakers and magnetic contactors. The MR-CM simple converter can connect to up to six compatible servo amplifiers having a total capacity of 3 kW or lower.

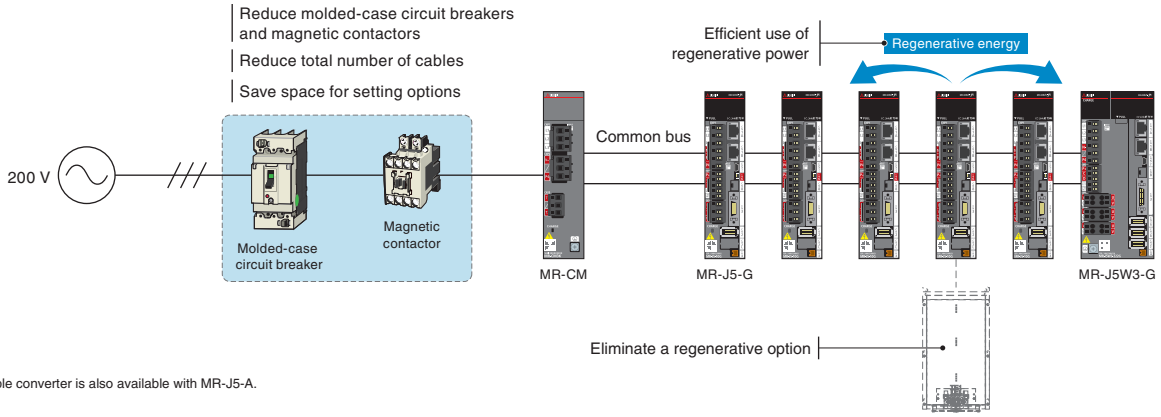

* Simple converter is also available with MR-J5-A.

Application Examples

[Vertical form, fill & seal]
The simple converter uses regenerative energy of the packing film unwinding axis for other axes such as conveying rollers.

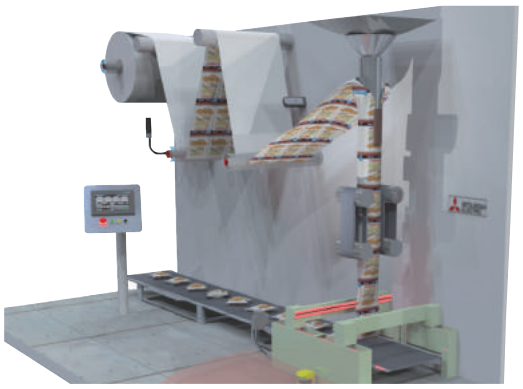

[Wafer prober]
The simple converter saves installation space for semiconductor manufacturing equipment in a clean room.

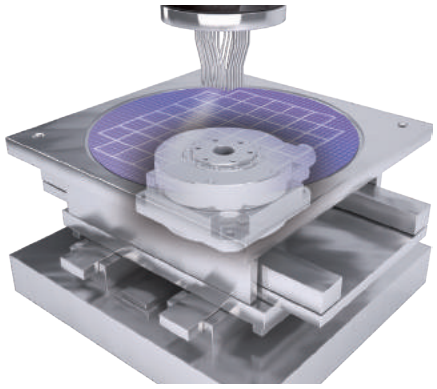

Multi-Axis Servo Amplifiers MR-J5W2 MR-J5W3

The 2-axis and 3-axis servo amplifiers are available for operating two and three servo motors, respectively. These servo amplifiers enable an energy-saving and compact machine at lower cost. Different types of servo motors including rotary servo motors, linear servo motors, and direct drive motors are freely combined as long as the servo motors are compatible with the servo amplifier.

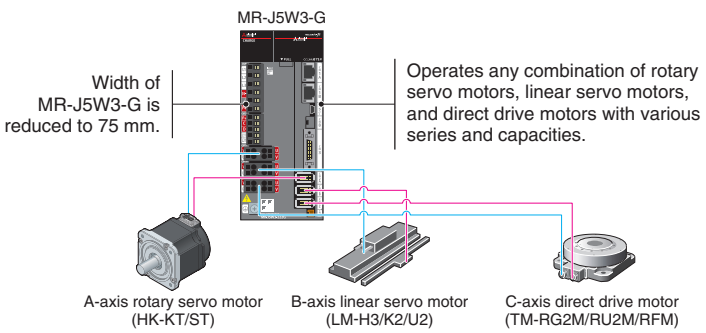

Predictive Maintenance

The servo amplifiers detect signs of machine failure by monitoring the operation status.

Maisart is an abbreviation for “Mitsubishi Electric's AI creates the State-of-the-ART in technology.” Mitsubishi Electric is leveraging original AI technology to make devices smarter.

Machine Diagnosis (Ball Screws/Linear Guides)

This function supports predictive maintenance by estimating frictions and vibrations of mechanical drive components such as ball screws and linear guides.

- Friction failure prediction with the friction estimation function
- Vibration failure prediction with the vibration estimation function

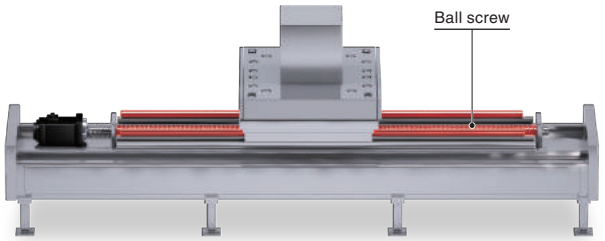

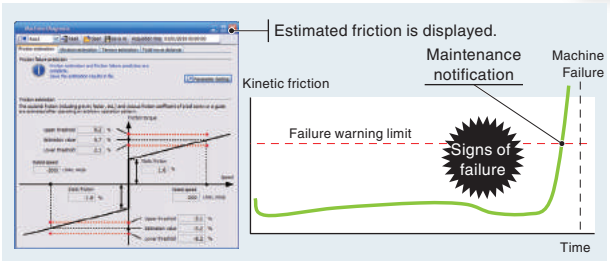

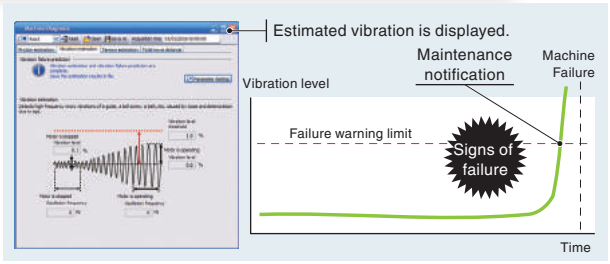

Machine Diagnosis (Belts) NEW

This function detects aging deterioration of belts in advance by the static friction failure prediction and the tension deterioration prediction with the belt tension estimation.

- Static friction failure prediction
- Belt tension deterioration prediction

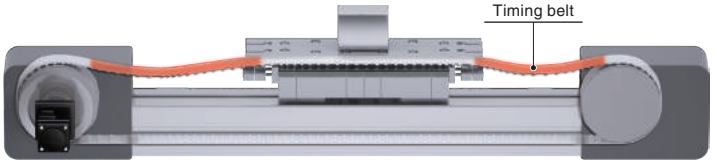

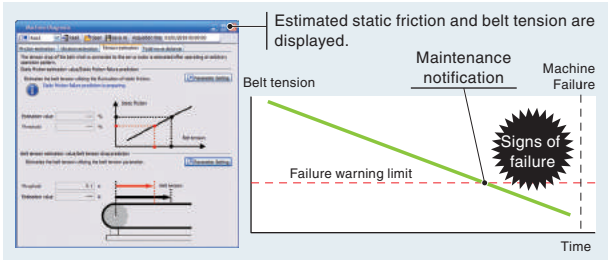

Machine Diagnosis (Gears) *1 NEW

With this function, the servo amplifier generates commands automatically, and executes to-and-fro positioning operation to estimate the amount of gear backlash. Gear failure is predicted based on the set nominal values for backlash.

- Backlash estimation function
- Gear failure prediction

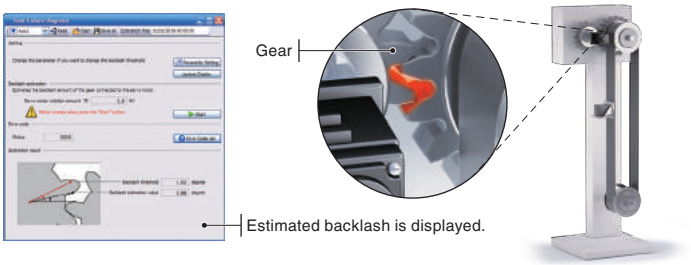

*1. The machine diagnosis (gears) does not work during normal operation.

Preventive Maintenance

Machine Diagnosis (Mechanical Drive Components)

This function estimates when a machine failure will occur based on the total travel distance of the servo motor, and notifies when it is time for replacement if the rated life of the mechanical drive components is set.

● Machine total travel distance failure prediction

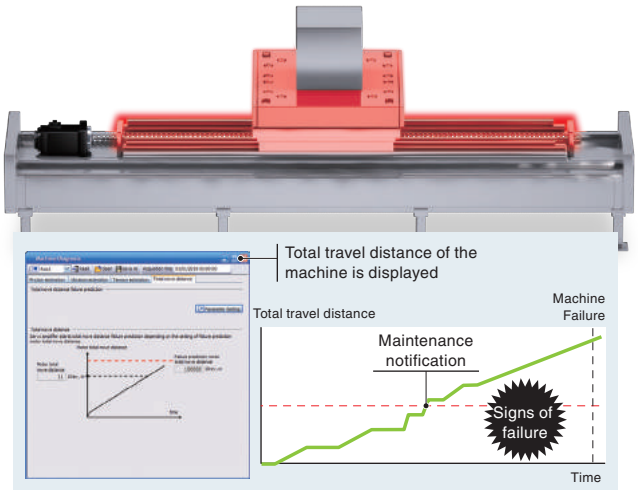

Servo Amplifier Life Diagnosis

This function displays the cumulative energization time and the number of inrush relay on/off times. The data can be used to check life of the parts as a rough guide.

● Cumulative energization time (Smoothing condenser/cooling fan life span)
● The number of inrush relay on/off times (Inrush relay life)

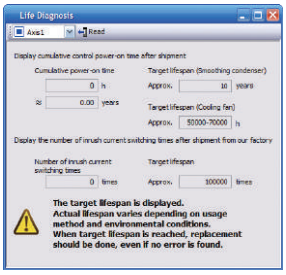

Corrective Maintenance

Drive Recorder

Enhanced functions

This function continuously monitors the servo status and records the status transition such as a trigger condition before and after an alarm for a fixed period of time. Reading the servo data on MR Configurator2 helps you analyze the cause of the alarm. In addition to the monitor values and the waveform of the past 16-time alarms in the alarm history, the system configuration and the servo parameters are displayed. Alarm occurrence time is also displayed when the servo amplifier and the controller are normally in communication on CC-Link IE TSN.

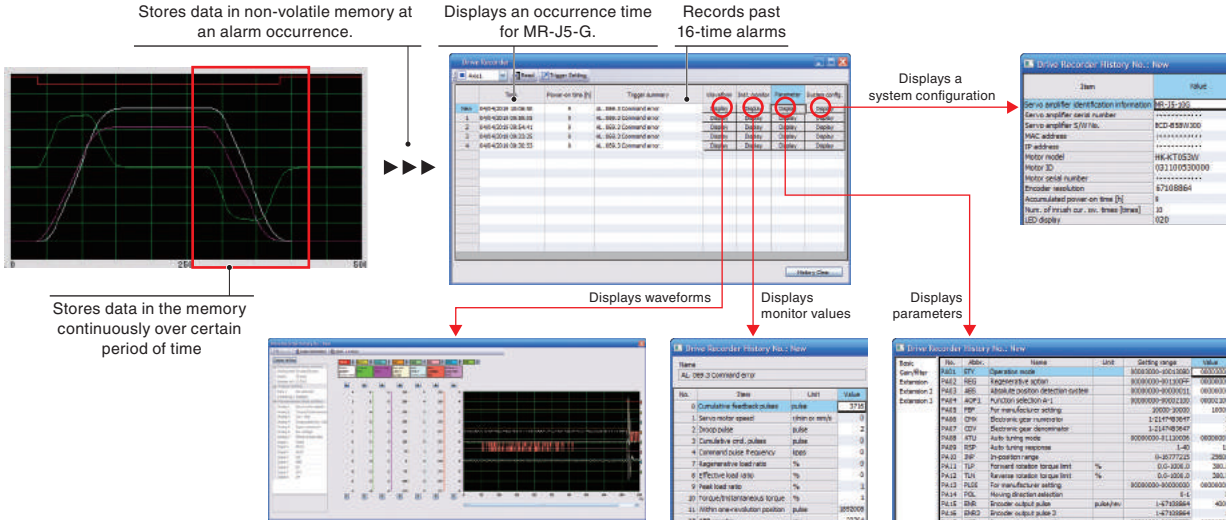

Connection/Communication Diagnosis

Disconnection Detection

NEW

The servo amplifiers are equipped with both input open-phase detection and output open-phase detection. Input open-phase detection detects an open phase of the main circuit power supply of the servo amplifier, and output open-phase detection detects an open phase of the servo motor power supply. The alarm can be distinguished from other alarms such as the overload alarm, reducing the time required to restore the system.

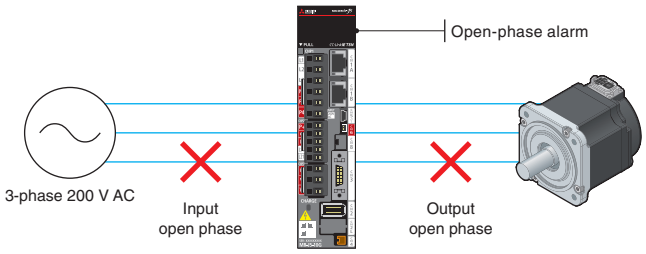

Servo Motor Incorrect Wiring Detection MR-J5W2 MR-J5W3

NEW

Multi-axis servo amplifiers MR-J5W2-G/ MRJ5W3-G detect servo motors with a different capacity that are incorrectly connected to the A-axis/B-axis/C-axis, contributing to servo motor protection. The servo amplifiers obtain servo motor capacity information of the connected servo motors from the encoders and check whether the servo motors which are connected to the power connectors match the capacity information. If the information is not matched, an alarm occurs. *1

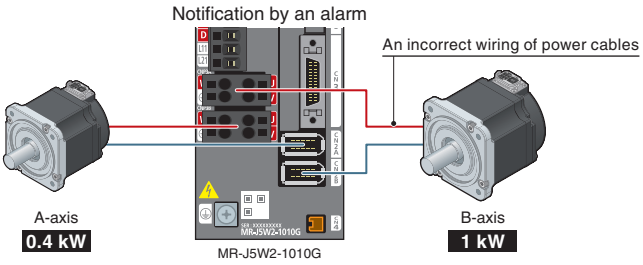

*1. The incorrect wiring detection does not work for servo motors with the same capacity.

Encoder Communication Diagnosis

NEW

The encoder communication diagnosis checks the encoder communication circuit in the servo amplifier. This function is useful for classifying the cause of errors (such as disconnected encoder cables) when the encoder communication alarm occurs.

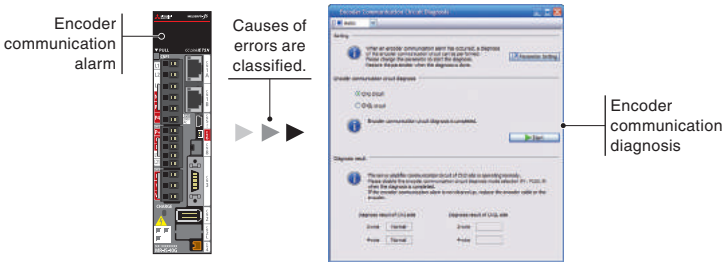

Path Control

Lost Motion Compensation

This function suppresses quadrant protrusion caused by friction and torsion generated when the servo motor rotates in a reverse direction. Therefore, the accuracy of circular path will be improved in path control used in XY table, etc.

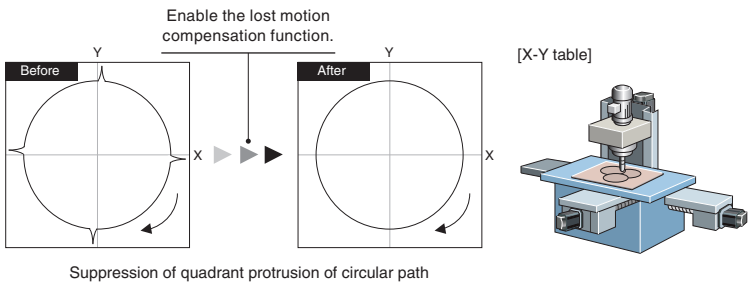

Suppression of quadrant protrusion of circular path

Command Interface

CC-Link IE TSN

NEW

The servo amplifiers drive the servo motors by receiving commands (position/speed/torque) at regular intervals in synchronous communication with the CC-Link IE TSN-compatible controller. When combined with a Motion module or Motion Control Software, the servo amplifiers enable exact synchronous operation of axes and machines through high-speed, high-precision time synchronization.

*1. The communication cycle of ≥ 31.25 µs is applicable when combined with RD78GH.

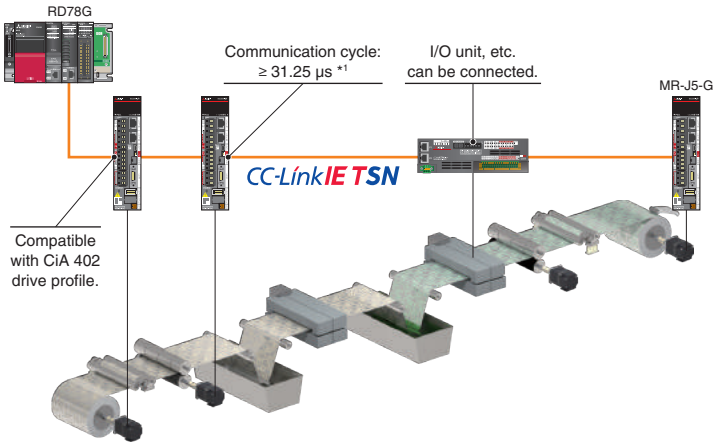

General-Purpose Interface

Pulse trains and analog input are used as the command interface. The control mode can be switched between position/speed/torque control modes. When an open collector is used, both sink and source inputs are enabled.

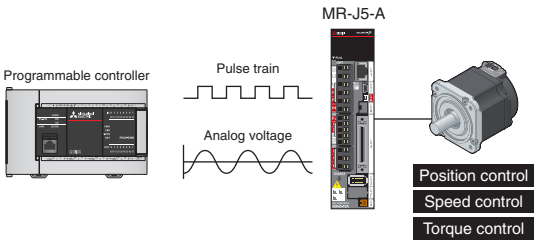

Servo Setup Software MR Configurator2

Tuning, monitor display, diagnosis, reading/writing parameters, and test operations are easily performed on a personal computer. This powerful software tool supports a stable machine system and optimum control, and moreover, shortens setup time.
MR-J5 servo amplifiers are supported by MR Configurator2 with software version 1.100E or later.

Parameter setting and docking help

Enhanced functions

Set parameters using the function display in the list without worries about the parameter No. and digits. You can view information related to the parameter being set in the docking help window.

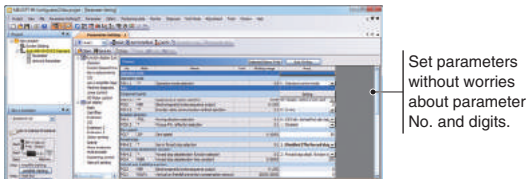

Supporting multi-axis project

Enhanced functions

Set parameters and monitor operation for multiple servo amplifiers through connecting to one of the servo amplifiers.

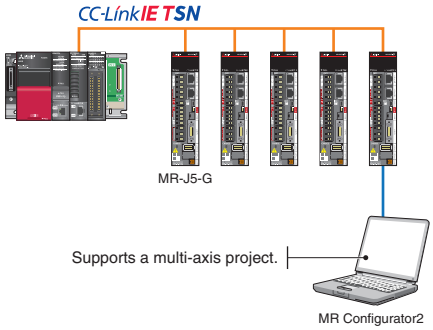

Tuning function

Adjust control gains finely on the [Tuning] window manually for further performance after the quick tuning and the one-touch tuning.

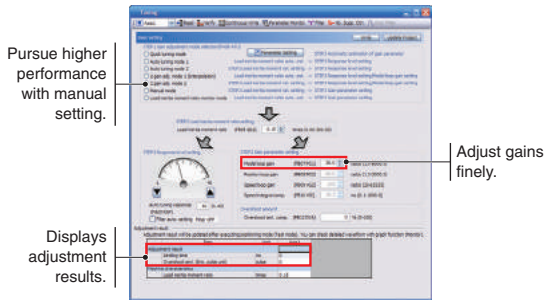

Graph function

Enhanced functions

Obtain graphs of 7 channels for analog and 8 channels for digital. Various servo statuses are displayed in the waveform at one measurement, supporting setting and adjustment. Convenient functions such as [Overwrite] for overwriting multiple data and [Select history] for displaying graph history are available. Two types of signals can be used as a trigger signal with an OR/AND condition.



Machine analyzer function

Input random torque to the servo motor automatically and analyze frequency characteristics (0.1 Hz to 8 kHz) of a machine system just by clicking the [Start] button. This function supports setting of machine resonance suppression filter, etc.

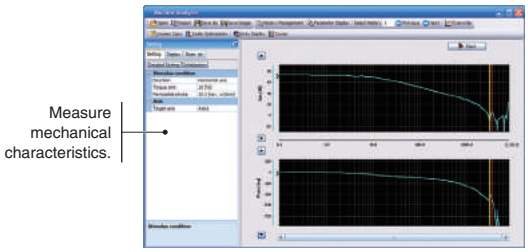

Software reset

NEW

Reset the software for the servo amplifier with this new function. Setting switches and parameters is enabled without turning off the main circuit power supply of the servo amplifier.

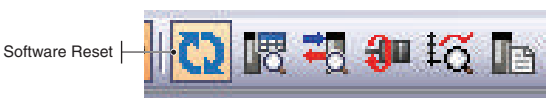

Selecting Options (Model Selection)

Available soon

Select necessary options such as encoder cables.
Easily create system configuration diagrams and lists of necessary purchases to prevent mistakes when ordering.

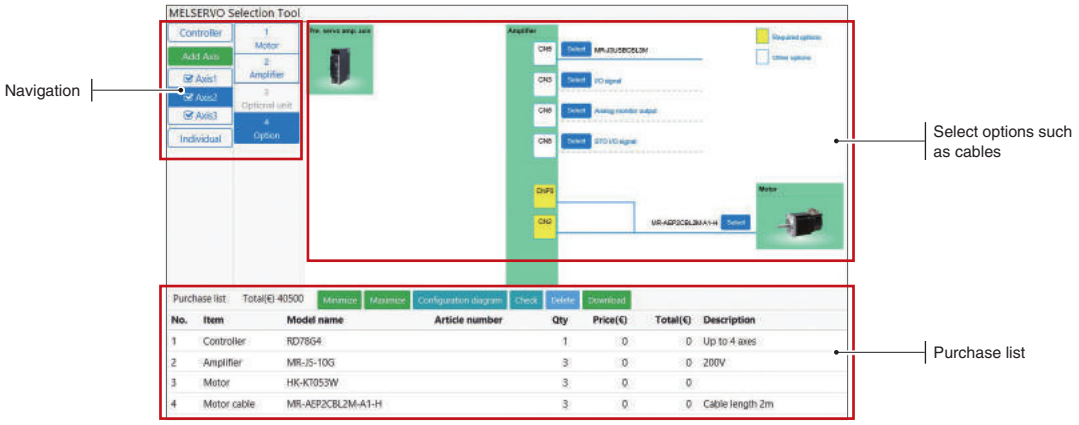

Selection of controllers/servo motors/servo amplifiers

● Select results from the drive system sizing software.

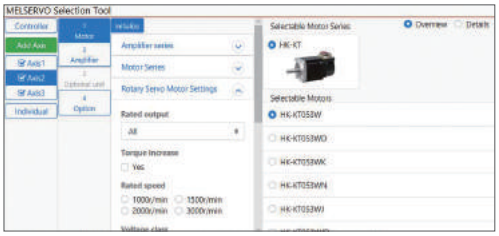

Selection of options

● Prevent selection mistakes.



Configuration

● Check a configuration of each axis.

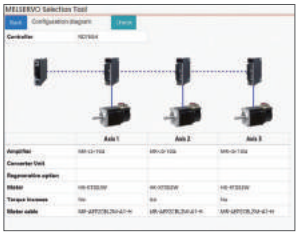

Purchase list

● Export to CSV file.

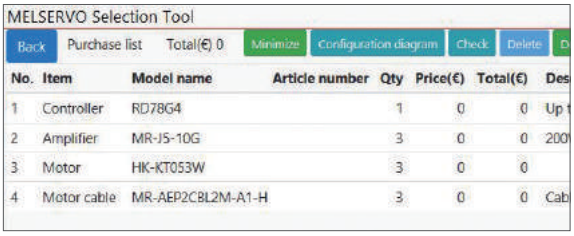

Refer to "Features Rotary Servo Motors" for details of the drive system sizing software Motorizer.

e-Manuals

Instruction manuals for the MELSERVO-J5 series are available in e-Manual format. These manuals are linked with manuals for other products such as servo motors and controllers. e-Manuals let you obtain necessary information quickly and also allow you to keep an enormous number of manuals as one database.
Currently supported languages: English, Japanese, Chinese

Features

● Use all necessary manuals as one database
● Download and use manuals in your local environment
● Use the e-Manual application on tablets
● Download and update manuals quickly and easily
● Search for desired information across multiple manuals



A broader selection of capacities to match various applications for smart equipment

Rotary Servo Motors

HK Series

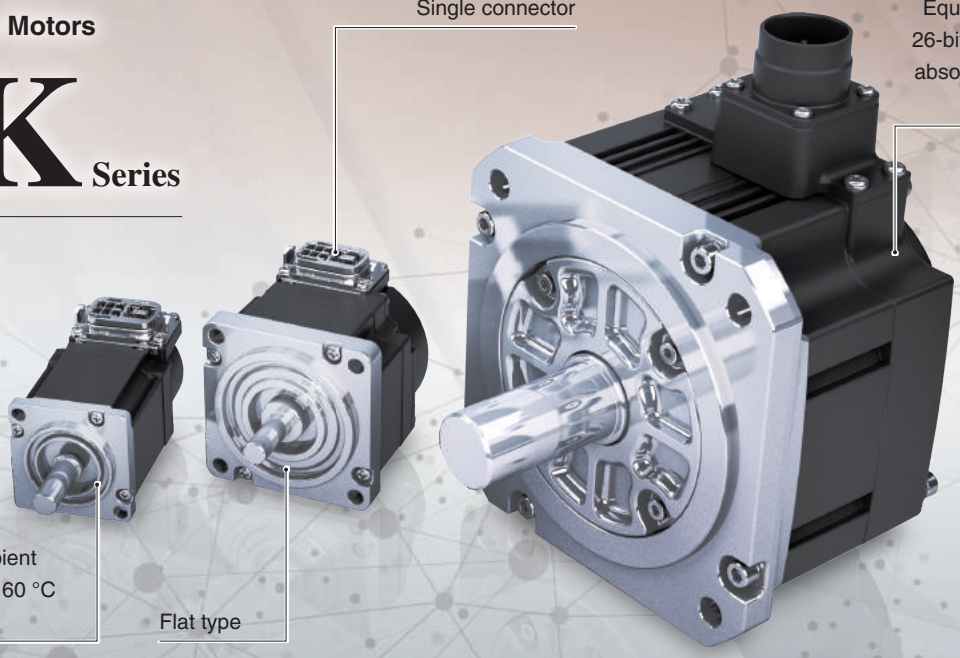



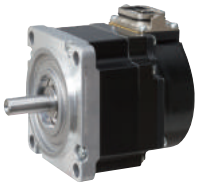

Small capacity, low inertia

HK-KT Series

Servo motors with a 26-bit batteryless absolute position encoder
Rated speed: 3000 r/min *1
Maximum speed: 6700 r/min *1
Our product lines includes 400 V and flat type models.
The servo motors have an all-in-one connector, making the connection simple.

*1. The speed varies by the model type.



Medium capacity, medium inertia

HK-ST Series

Servo motors with a 26-bit batteryless absolute position encoder
Rated speed: 2000 r/min *1
Maximum speed: 4000 r/min *1
The cables for the encoder, the electromagnetic brakes, and the power are equipped with one-touch lock.

*1. The speed varies by the model type.

Product Lines

The HK-KT series boasts a product line that offers 16 models in the 200 V class and 7 models in the 400 V class (total of 23 models, greatly increased from the 5 models in the HG-KR for MR-J4).

Series	Inertia	Motor type	Servo amplifier power supply	0.1 kW	1.0 kW	10 kW
				: Future release planned		
HK-KT	Low inertia	HK-KT_W	200 V AC	50 W to 2.0 kW		
			400 V AC	50 W to 2.0 kW		
		HK-KT_4_W	200 V AC	0.2 kW to 1.0 kW		
			400 V AC	0.4 kW to 2.0 kW		
HK-ST	Medium inertia	HK-ST_W	200 V AC	0.5 kW to 3.5 kW	Up to 11 kW	
			400 V AC	0.5 kW to 11 kW		
		HK-ST_4_W	200 V AC	0.3 kW to 3.0 kW	Up to 5.5 kW	
			400 V AC	0.5 kW to 11 kW		

Notes: The motor types are classified by the power class (200 V or 400 V) of the servo motors. The servo motors can be driven regardless of the servo amplifier power supply.

Batteryless Absolute Position Encoder as Standard

NEW

Eliminate the Need for Purchase/Replacement/Stock Control

Servo motors come equipped with a batteryless absolute position encoder as standard, making it possible to configure absolute position systems without the use of batteries or any other options.
Moreover, maintenance costs are reduced as a result of eliminating the battery replacement and stock control.

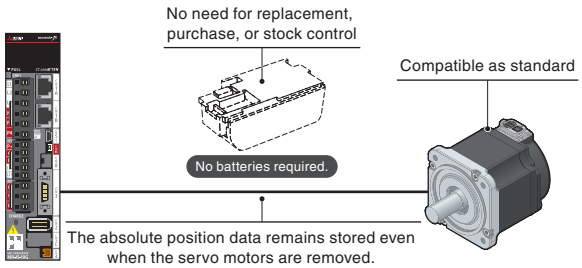

Reduce Wiring for Multi-Axis Systems

In a conventional multi-axis system, battery cables are necessary between the servo amplifiers. Now that the batteries are not required with the use of the batteryless absolute position encoders, wiring battery cables for multi-axis systems is not required.

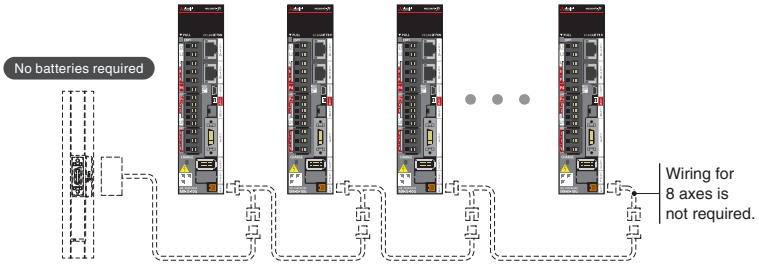

Save Time in Transporting

Position data remains stored even when the rotary servo motors are disconnected from the servo amplifiers. Thus, control cabinets can be separated from the machines without losing the position data, making it easy to transport machines for use at a new location.
The encoder does not require lithium batteries, allowing machines to be transported by air or sea without special handling.

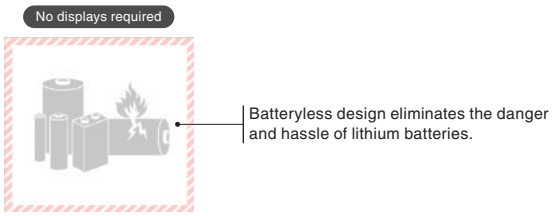

Motor type HK-KT_W/HK-ST_W (Note 1)

* : Motor flange size [Unit: mm]

HK-KT Series								HK-ST Series			
40 x 40 *		60 x 60 *		80 x 80 *		90 x 90 *		130 x 130 *		176 x 176 *	
Model	Capacity [kW]	Model	Capacity [kW]	Model	Capacity [kW]	Model	Capacity [kW]	Model	Capacity [kW]	Model	Capacity [kW]
HK-KT053W	0.05	HK-KT13UW	0.1	HK-KT23UW	0.2	HK-KT7M3UW	0.75	HK-ST52W	0.5	HK-ST202W	2.0
HK-KT13W	0.1	HK-KT23W	0.2	HK-KT43UW	0.4	HK-KT103UW	1.0	HK-ST102W	1.0	HK-ST352W	3.5
HK-KT1M3W	0.15	HK-KT43W	0.4	HK-KT7M3W	0.75	HK-KT153W	1.5	HK-ST172W	1.75		
		HK-KT63W	0.6	HK-KT103W	1.0	HK-KT203W	2.0	HK-ST202AW	2.0		
						HK-KT202W	2.0	HK-ST302W	3.0		

Motor type HK-KT_4_W/HK-ST_4_W (Note 1, 2)

* : Motor flange size [Unit: mm]

HK-KT Series						HK-ST Series			
60 x 60 *		80 x 80 *		90 x 90 *		130 x 130 *		176 x 176 *	
Model	Capacity [kW]	Model	Capacity [kW]	Model	Capacity [kW]	Model	Capacity [kW]	Model	Capacity [kW]
HK-KT434W	0.4	HK-KT7M34W	0.75	HK-KT1534W	1.5	HK-ST524W	0.5	HK-ST2024W	2.0
HK-KT634W	0.6	HK-KT1034W	1.0	HK-KT2034W	2.0	HK-ST1024W	1.0	HK-ST3524W	3.5
				HK-KT2024W	2.0	HK-ST1724W	1.75	HK-ST5024W	5.0
						HK-ST2024AW	2.0		
						HK-ST3024W	3.0		

Notes: 1. In model names, "U" indicates a flat type and "A" indicates a long type with a small flange.
2. The 400 V servo amplifiers are planned for a future release. The listed capacity is applicable when the servo motors are combined with the 400 V servo amplifiers. Refer to "Rotary Servo Motors Specifications" for when the 200 V servo amplifiers drive rotary servo motors.

Single Connector/One-Touch Lock/Single Cable Type NEW

HK-KT Series: Single Connector/Single Cable Type/One-Touch Lock

The single connector for the HK-KT series combines the motor power supply, encoder, and electromagnetic brake into a single cable. The one-touch lock eliminates the need for tightening screws, making wiring easy. The servo motors are also compatible with the dual cable type. The cables can be mounted either horizontally or vertically according to your selection. The vertically mounted cables are planned for a future release.
Refer to "Options/Peripheral Equipment" for details of servo motor cables.

Horizontally mounted single cable type with one-touch lock

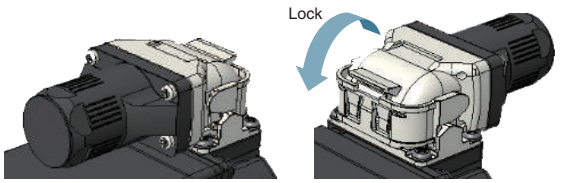

In the direction of the load side

In the opposite direction of the load side

Vertically mounted single cable type with one-touch lock

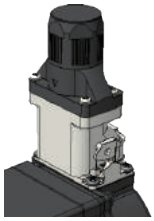

Future release planned

Horizontally mounted dual cable type with one-touch lock

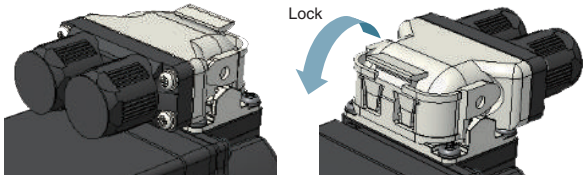

In the direction of the load side

In the opposite direction of the load side

Vertically mounted dual cable type with one-touch lock

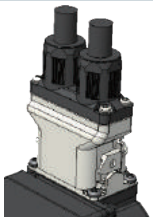

Future release planned

Connection example of one-touch lock with single cable type

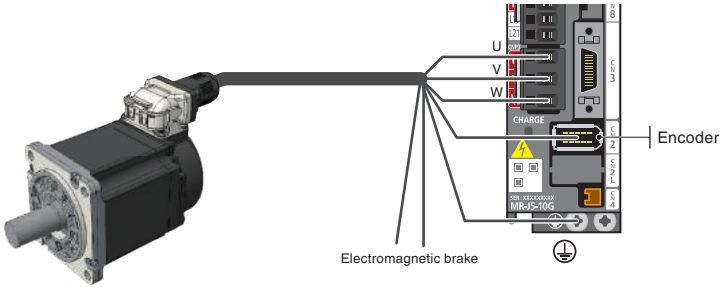

HK-ST Series: One-Touch Lock

HK-ST series servo motors boast a greatly simplified installation process through use of the one-touch lock system. The one-touch lock can be used to mount connectors for the motor power supply, encoder, and electromagnetic brake, which eliminates the need for tightening screws. The HK-ST series is compatible with both straight and angle type connectors and also supports traditional screw-tightened connectors.

One-touch lock

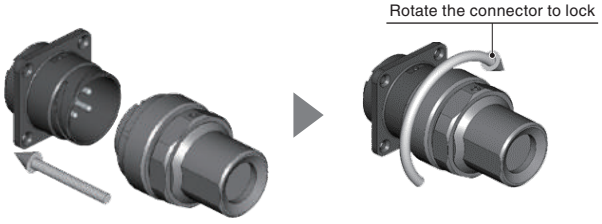

Expanding Combinations of Servo Amplifiers and Servo Motors

Enhanced functions

Increases Maximum Torque by Combining with Larger-Capacity Servo Amplifiers

It is possible to increase the maximum torque and achieve a shorter cycle time by combining the servo motor with a larger-capacity servo amplifier.

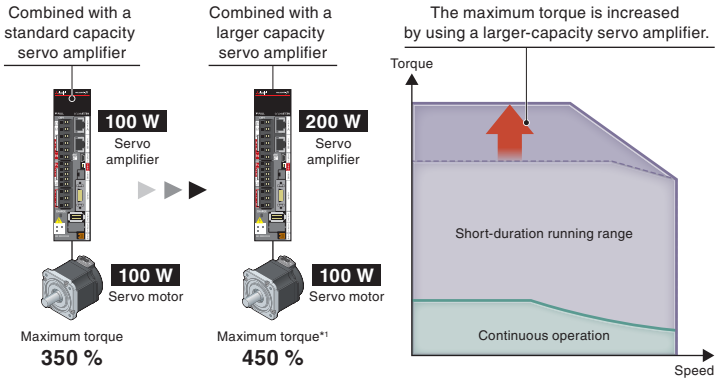

*1. When the maximum torque of HK-KT 13W servo motor is increased with the 200 W servo amplifier.

Drives Smaller Capacity Servo Motors

Servo amplifiers are able to drive servo motors with a smaller capacity than the servo amplifier being used, reducing the kinds of spare parts that are needed.

For example, 400 W servo amplifiers are compatible with the following servo motors: 50 W, 100 W, 150 W, 200 W, and 400 W models. Refer to "Combinations of Rotary Servo Motors and Servo Amplifiers" for details of the combinations.

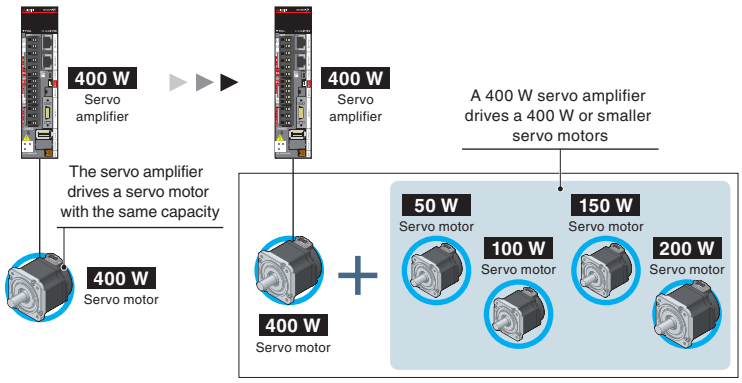

Drives 200 V/400 V Class Servo Motors

The 200 V servo amplifiers can drive both 200 V and 400 V servo motors, and the 400 V servo motors may produce torque that is sufficient for operation when combined with smaller-capacity 200 V servo amplifiers. Lowering of the capacity of the servo amplifier contributes to lower costs and reduced installation space.

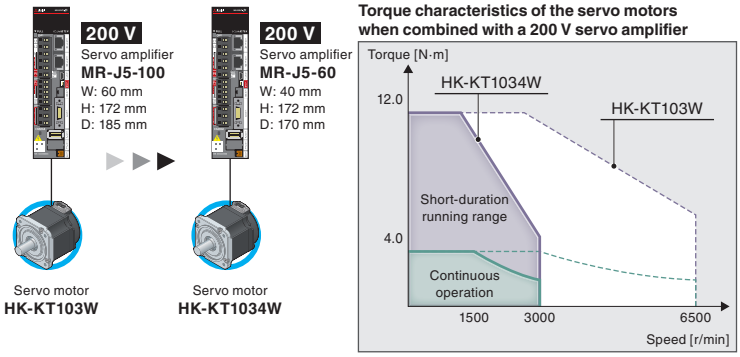

Compact Servo Motors with a Batteryless Absolute Position Encoder NEW

HK-KT series servo motors come equipped with a batteryless absolute position encoder and are more compact than the previous generation HG-KR series. Flat types are also available in the HK-KT product line, contributing to a compact machine design.

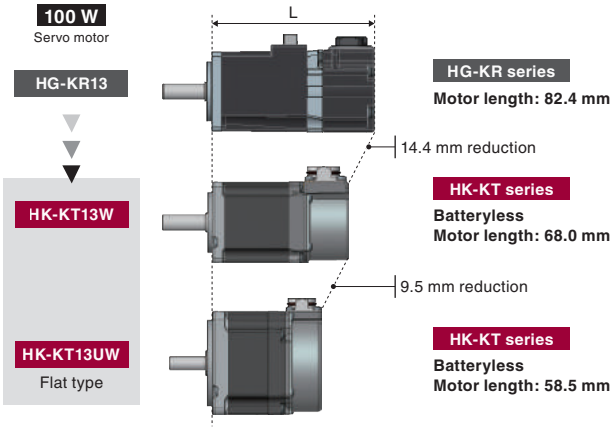

Improved Environmental Resistance Enhanced functions

Servo motors feature enhanced environmental resistance.
Ingress protection (IP) rating of the servo motors: IP67 *1
Designed for an ambient temperature of up to 60 ˚C.*2

*1. If the IP rating of the servo motor differs from those of option cables and connectors, overall IP rating depends on the lowest of all.
*2. Derate the speed/torque when using the servo motors at high ambient temperatures.

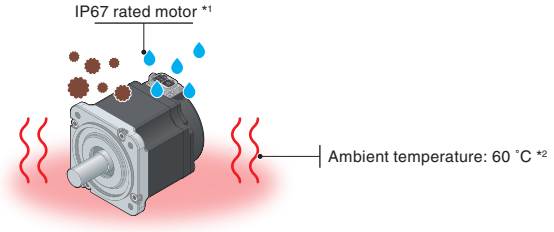

Application Examples

Semiconductor/FPD/photovoltaic manufacturing systems 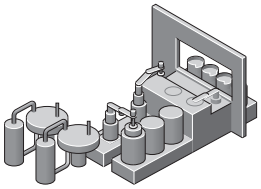	Mounters/bonders 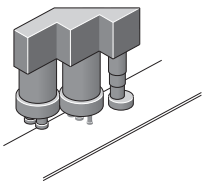	X-Y tables 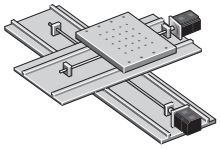	Robots 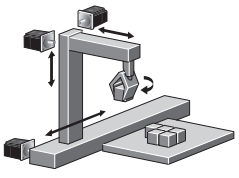
Loaders/unloaders, feeders and sliders 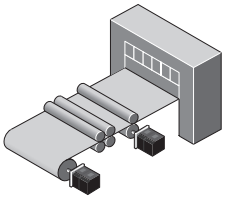	Food processing machines (filling machines, mixers, measuring machines, etc.) 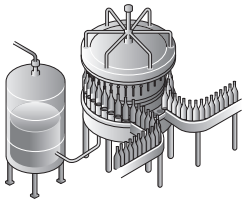	Food packaging machines 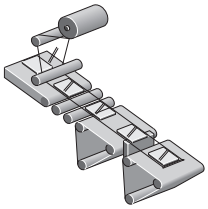	Press machines 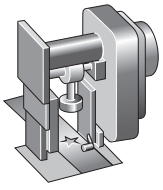

Drive System Sizing Software "Motorizer" NEW

Select the most suitable servo motors, servo amplifiers, and regenerative options for your machine just by setting machine specifications and operation patterns. You can select a suitable combination from various results.
This software also supports multi-axis systems, enabling you to set operation patterns and select options for multiple axes.

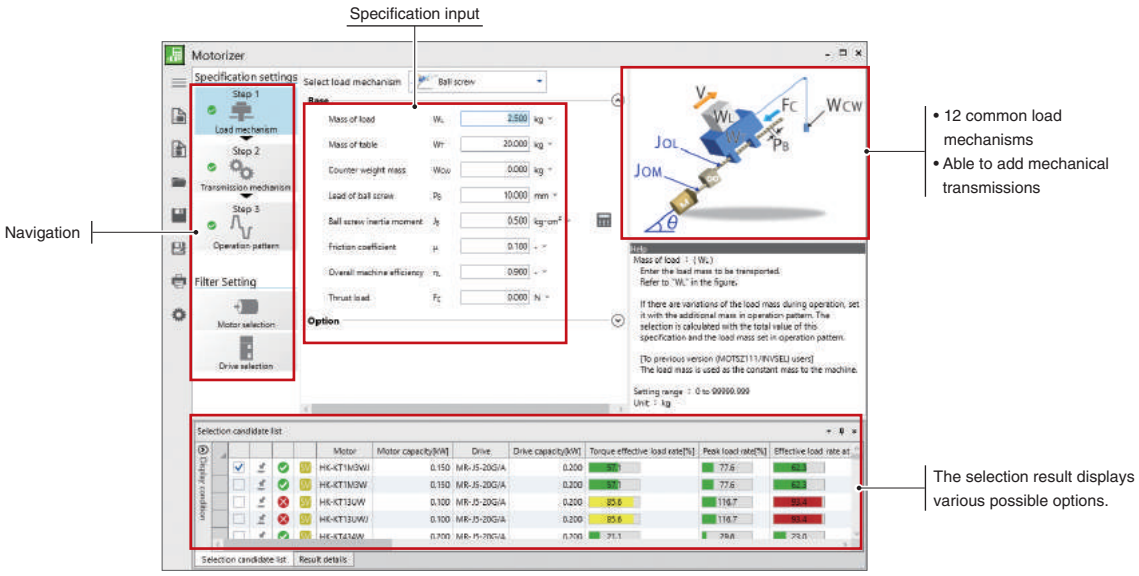

Flexible support for load mechanisms

- Select a load mechanism from 12 common types.
- Add transmission mechanisms such as a coupling.
- Set an inclination angle of the load mechanisms as desired.

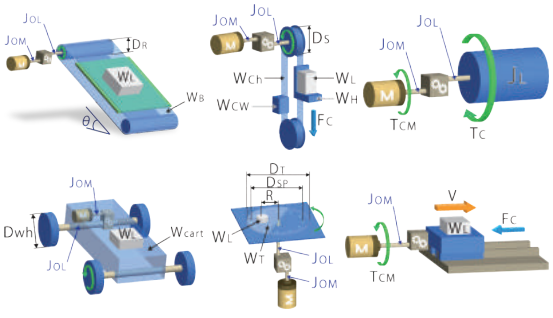

Compatible with multi-axis systems

- Supports the multi-axis servo amplifiers and the converters.
- Set operation patterns for multiple axes.
- Select regenerative options for a multi-axis system.

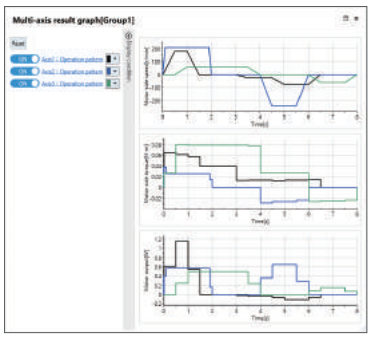

Selection of several patterns

- Displays a list of load to motor inertia ratio, peak torque, etc., of each selection.
- Compatible with the expanded combinations of the servo amplifiers and the servo motors.
- Set threshold values for judgement.

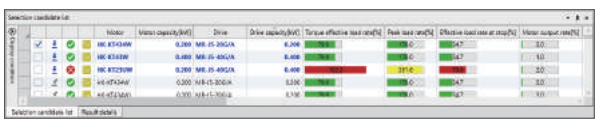

Tutorial video

- Illustrates how to use the software and select drive systems in the video.

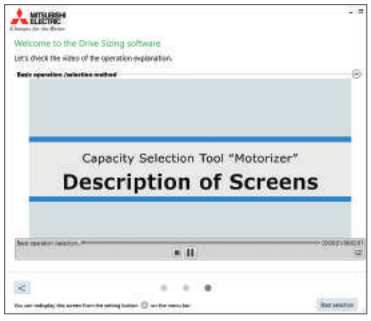

Servo motors for high-speed, high-accuracy, linear drive systems



Product Lines

Four series are available depending on applications.

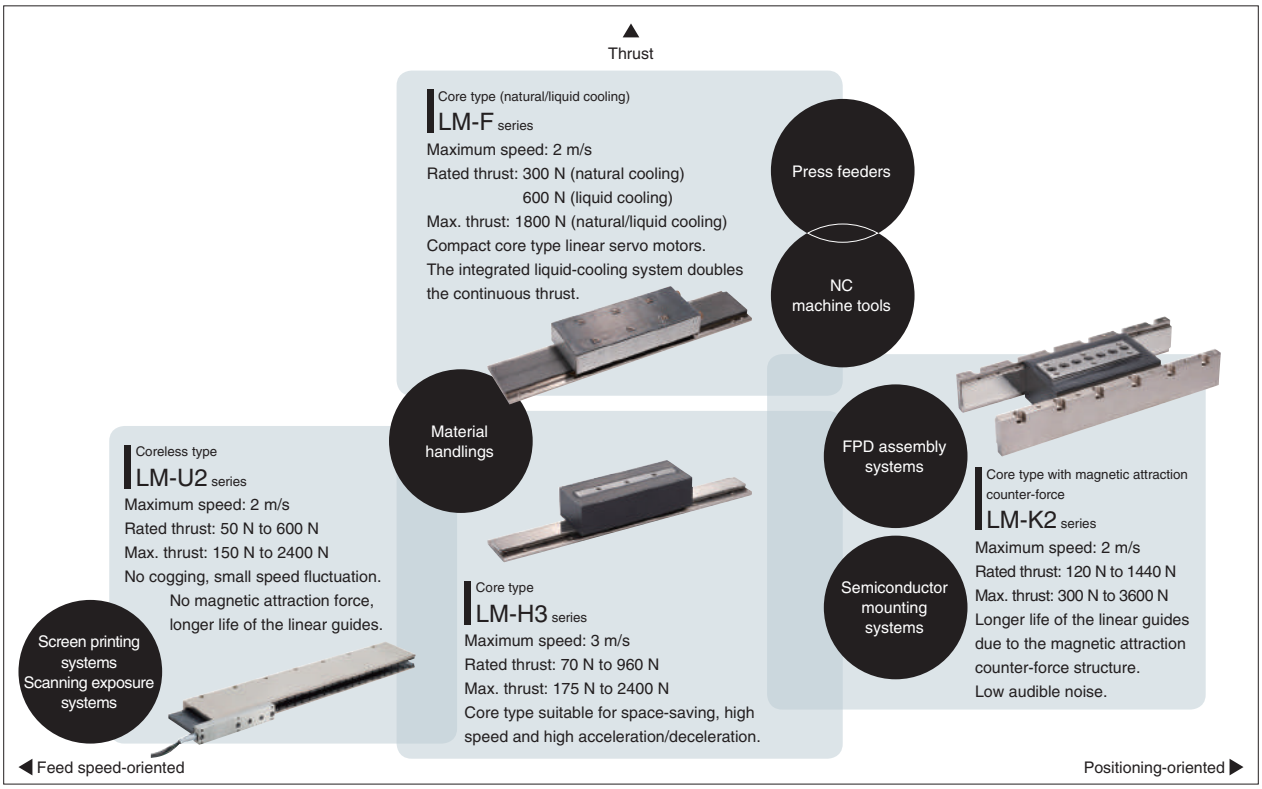

Linear Servo Motors

Basic Performance

- Maximum speed: 3 m/s (LM-H3 series)
- Maximum thrust range: 150 N to 3600 N. Small size and high thrust are achieved by the increased winding density and the optimized core and magnet geometries as a result of electromagnetic field analysis.
- Four series are available: core, liquid-cooling core, magnetic attraction counter-force core, and coreless types.
- The linear servo motors are compatible with a variety of serial interface linear encoders. The linear encoder resolution ranges from 1 nm and up.
- High-performance systems such as high-accuracy tandem synchronous control are achieved with CC-Link IE TSN.

Higher Machine Performance

For higher machine performance

- Improved productivity due to high-speed driving part.

For easier use

- The linear servo motor enables a simple and compact machine with high rigidity.
- Smooth operation and clean systems are achieved.

For flexible machine configurations

- Multi-head and tandem systems are easily configured.
- The linear servo motor is suitable for long-stroke applications.

[Offers more advantage than conventional ball screw driving systems]

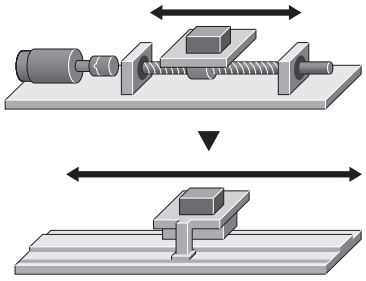

Application Examples

Optimum for a linear drive system which requires a high speed and high accuracy. Easily achieve a tandem configuration or multi-head configuration.

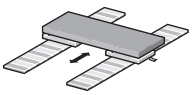

Tandem configuration

The linear servo motors configured in tandem are suitable for large systems that require highly accurate synchronous operation between two axes.

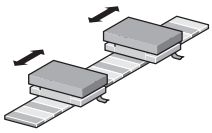

Multi-head configuration

Multi-head systems enable control of two motor coils independently, thereby simplifying machine mechanisms. This system is suitable for machines that require a short cycle time.

Machine tools XYZ stage

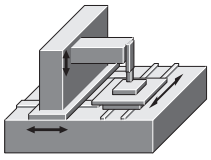

Semiconductor/FPD manufacturing systems
Electrical parts assembling/manufacturing systems

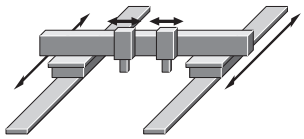

Screen printing systems and large FPD coaters

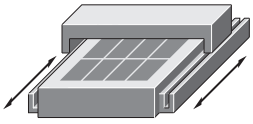

Material handling systems

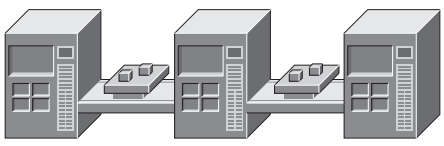

Multi-head material handling between machines

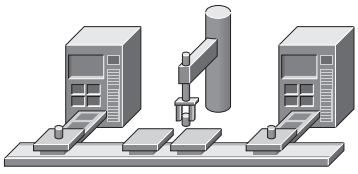

Compact and robust direct drive motors for high-accuracy applications



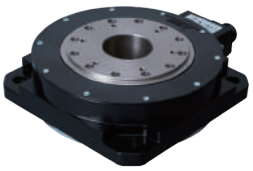

Low-profile flange type

TM-RG2M Series

Low-profile table type

TM-RU2M Series

Low-profile for space and weight saving



High-rigidity

TM-RFM Series

High torque for high-weight capacity

Product Lines

17 models with 4 different diameters are available.

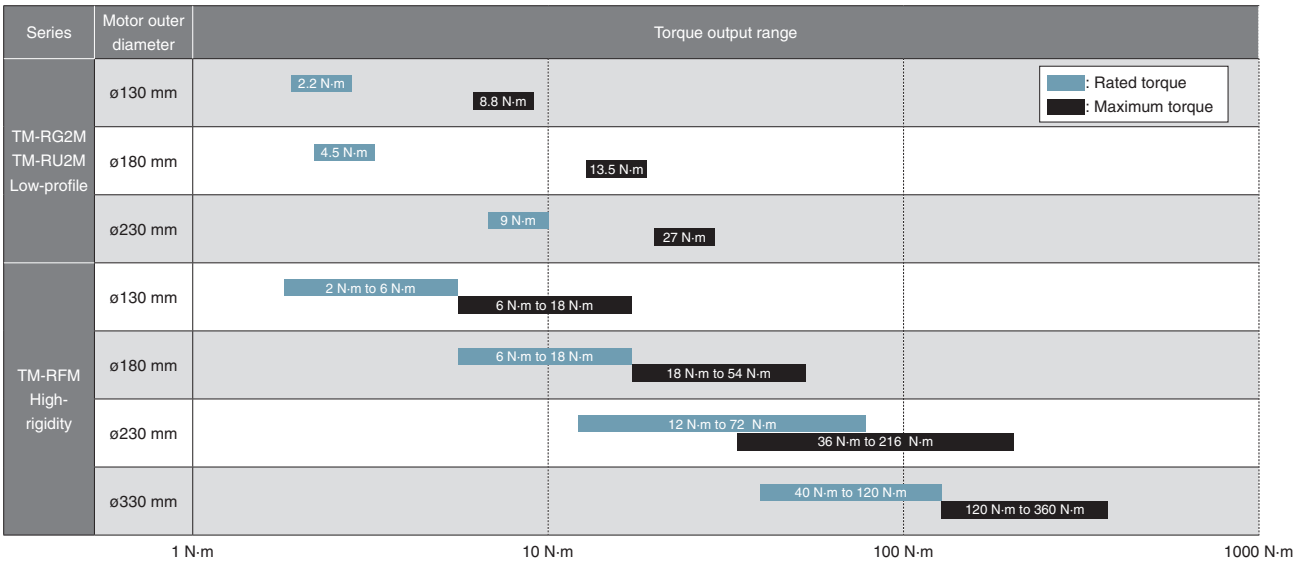

Notes: Use the direct drive motors manufactured in June 2019 or later.

Direct Drive Motors

Basic Performance

High performance with the latest technologies

Our latest magnetic design and winding technologies enable high torque density. In addition, extremely smooth rotation is achieved by the minimized torque ripple.

High-resolution absolute position encoder

The direct drive motor is equipped with a high-resolution absolute position encoder (1,000,000 to 4,000,000 pulses/rev) as standard. High-accuracy machines are achieved.

Compact and low-profile design

Due to high level of structural design technology, compact and low-profile design is achieved. This design enables a small mounting space and a low center of gravity.

Hollow shaft diameter range: ø20 mm to 104 mm

The motor is equipped with a large hollow shaft resulting from using bearing and encoder with large diameter. It allows cables and air tubing to pass through.

Higher Machine Performance

For higher machine performance

- Suitable for low-speed and high-torque operations.
- High-accuracy positioning is achieved because the motor is directly coupled to a load.

For easier use

- Since mechanical transmission is no longer required, no backlash and no abrasion occurs, enabling smooth operation with less audible noise, a clean system, and easy maintenance.
- Less components are required for the system.

For flexible machine configurations

- A simple, compact, and high-rigid machine is achieved.
- Machine stability is enhanced due to the low-profile design and a low center of gravity.
- The motor has an inner rotor with hollow shaft that allows cables and pipes to pass through.

[No mechanical transmission contributing to no warp or distortion]

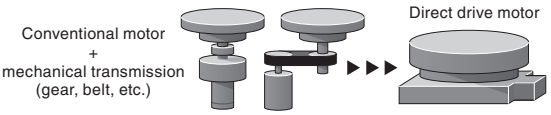

Application Examples

Suitable for low speed and high torque applications.

Coating and vapor deposition systems 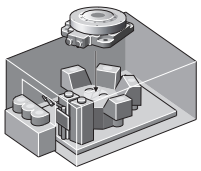	Spin-type cleaning systems for FPD/semiconductor 	FPD/semiconductor testing systems (XY tables) 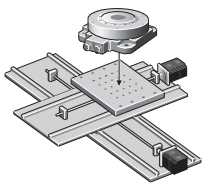
Index table for machine tools 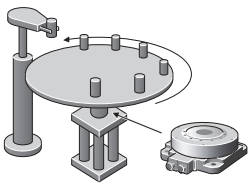	Rotary axis for polishing systems 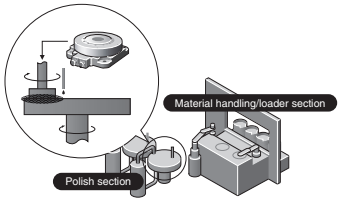	Rotary axis for material handling robots 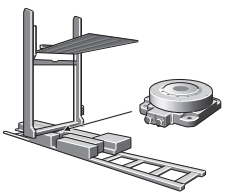

Mitsubishi Electric Solutions

e-F@ctory Solution

High-speed networks with large data bandwidth are viewed as a mandatory requirement in current manufacturing trends. The combination of CC-Link IE TSN and Mitsubishi Electric's e-F@ctory solution ensures robust integration between IT and factory automation systems, providing an intelligent smart factory solution that reduces total cost while improving operations, production yield, and efficient management of the supply chain. e-F@ctory is the Mitsubishi Electric solution for adding value across the manufacturing enterprise by enhancing productivity, reducing maintenance and operations cost together with seamless information flow throughout the plant.

e-F@ctory uses a combination of factory automation and IT technologies in combination with various best-in-class partner products through its alliance program.

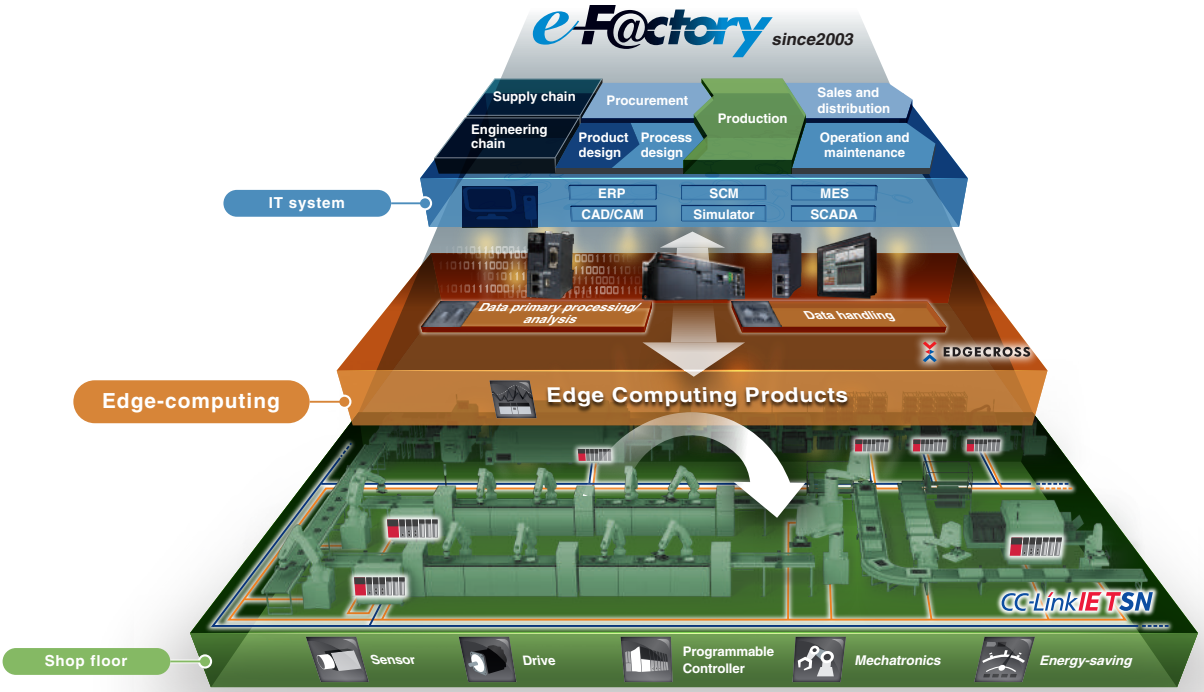

e-F@ctory

CC-Link IE TSN

- IT integration
- Open technology
- High speed, Time synchronization
- Network integration

MELSEC iQ-R series | MELSERVO-J5 | FREQROL-A800 | GOT2000 | MELFA FR SERIES | MITSUBISHIELECTRIC CNC C80

Mitsubishi Electric Partners

e-F@ctory Alliance

The e-F@ctory Alliance is a FA manufacturer partnering program that strongly links the connection compatibility of Mitsubishi Electric FA equipment utilizing excellent software and machinery offered by partners, thereby enabling systems to be built by systems integration partners and the proposal of optimal solutions to customers.



Software partner

Developing and proposing excellent application software and drivers that ensure the connection compatibility of Mitsubishi Electric FA equipment.

Device Partner

Proposing peripheral equipment that is easy to connect with Mitsubishi Electric FA equipment and is easier to use.

Mitsubishi Electric Servo System Partners

Servo system includes controllers, servo drivers, actuators, sensors, etc. The servo system takes a step further to accelerate the equipment revolution by collaborating with our partner companies. Now that a wide variety of partner products are available such as stepping motors, pressure-resistance, explosion-proof type motors, linear encoders, your system will be configured flexibly.
The Mitsubishi Electric Servo System Partner Association is a subcommittee of e-F@ctory Alliance.
Partner product lines supporting CC-Link IE TSN and MELSERVO-J5 will be expanded sequentially.

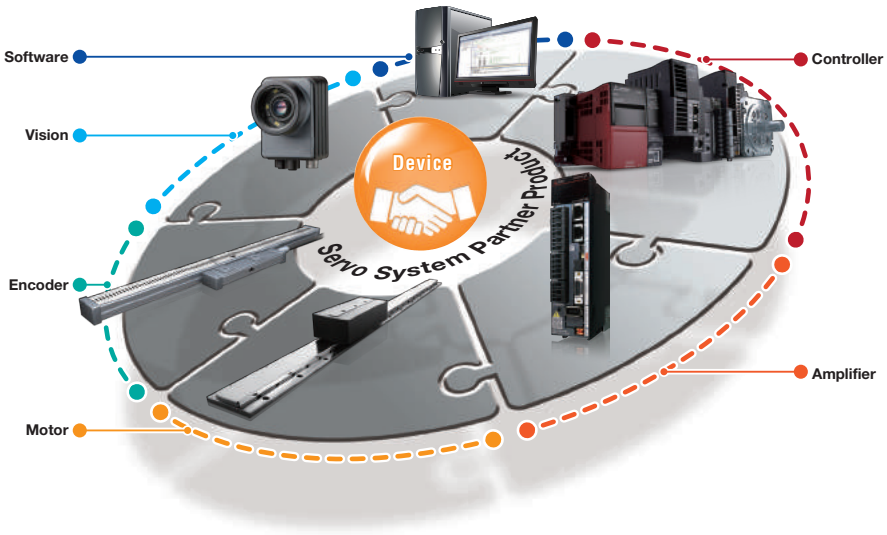

MEMO

1 Common Specifications

Rotary Servo Motor Product Lines 1-2

Combinations of Rotary Servo Motors and Servo Amplifiers 1-6

Combinations of Linear Servo Motors and Servo Amplifiers 1-8

Combinations of Direct Drive Motors and Servo Amplifiers 1-10

Environment 1-11

Compliance with Global Standards and Regulations 1-12

* Refer to p. 7-55 in this catalog for conversion of units.

Rotary Servo Motor Product Lines

Select a servo motor that is perfect for your machines from a wide range of product lines.
The maximum torque (rated torque ratio) in the graph is applicable when the torque is increased by combining a larger-capacity servo amplifier.

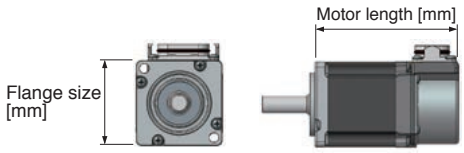

HK-KT_W: Rated speed 3000 r/min, 2000 r/min

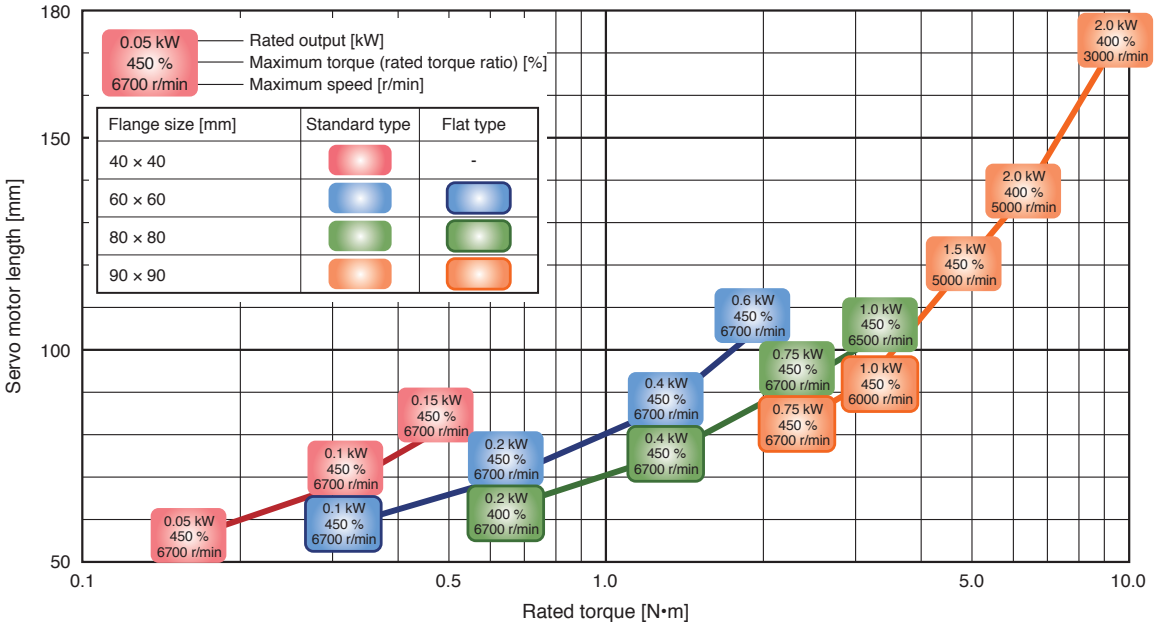

HK-KT_4_W: Rated speed 1500 r/min, 1000 r/min

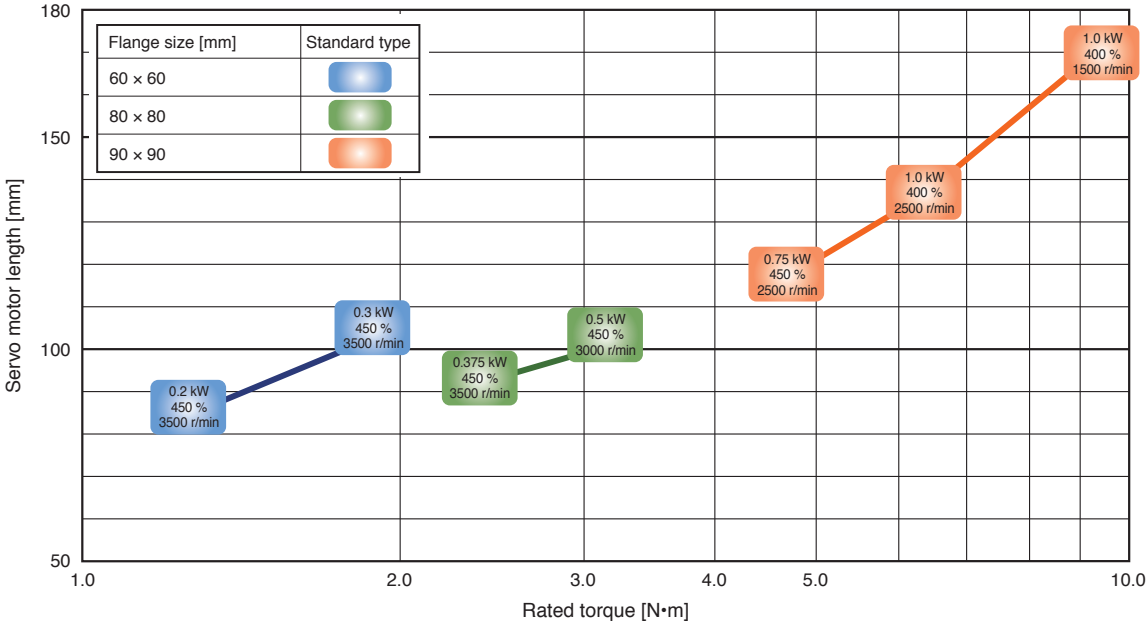

Rotary Servo Motor Product Lines

The listed values in the table are applicable when combining the servo motors with 200 V AC servo amplifiers.
The values in angle brackets are applicable when the torque is increased by combining a larger-capacity servo amplifier. Refer to "Combinations of Rotary Servo Motors and Servo Amplifiers" in this catalog for the available combinations.

Motor type	Flange size [mm]	Model	Rated output [kW]	Torque [N•m]		Speed [r/min]		Rated power rate (Note 1) [kW/s]
				Rated	Maximum	Rated	Maximum	
HK-KT_W	40 × 40	HK-KT053W	0.05	0.16	0.56 (0.72)	3000	6700	6.4
		HK-KT13W	0.1	0.32	1.1 (1.4)	3000	6700	14.8
		HK-KT1M3W	0.15	0.48	1.7 (2.1)	3000	6700	23.3
	60 × 60	HK-KT13UW	0.1	0.32	1.1 (1.4)	3000	6700	8.4
		HK-KT23W	0.2	0.64	2.2 (2.9)	3000	6700	19.4
		HK-KT43W	0.4	1.3	4.5 (5.7)	3000	6700	39.5
		HK-KT63W	0.6	1.9	6.7 (8.6)	3000	6700	61.0
	80 × 80	HK-KT23UW	0.2	0.64	1.9 (2.5)	3000	6700	9.7
		HK-KT43UW	0.4	1.3	4.5 (5.7)	3000	6700	22.3
		HK-KT7M3W	0.75	2.4	8.4 (10.7)	3000	6700	41.6
		HK-KT103W	1.0	3.2	11.1 (14.3)	3000	6500	60.3
	90 × 90	HK-KT7M3UW	0.75	2.4	8.4 (10.7)	3000	6700	27.0
		HK-KT103UW	1.0	3.2	11.1 (14.3)	3000	6000	37.0
		HK-KT153W	1.5	4.8	16.7 (21.5)	3000	5000	52.0
		HK-KT203W	2.0	6.4	19.1 (25.5)	3000	5000	71.7
		HK-KT202W	2.0	9.5	28.6 (38.2)	2000	3000	111
HK-KT_4_W	60 × 60	HK-KT434W	0.2	1.3	4.5 (5.7)	1500	3500	39.5
		HK-KT634W	0.3	1.9	6.7 (8.6)	1500	3500	61.0
	80 × 80	HK-KT7M34W	0.375	2.4	8.4 (10.7)	1500	3500	41.6
		HK-KT1034W	0.5	3.2	11.1 (14.3)	1500	3000	60.3
	90 × 90	HK-KT1534W	0.75	4.8	21.5	1500	2500	52.0
		HK-KT2034W	1.0	6.4	25.5	1500	2500	71.7
		HK-KT2024W	1.0	9.5	38.2	1000	1500	111

Notes: 1. The values are for the standard servo motors (without an electromagnetic brake). Refer to the list of specifications of each rotary servo motor for details.

Rotary Servo Motor Product Lines

Select a servo motor that is perfect for your machines from a wide range of product lines.
The maximum torque (rated torque ratio) in the graph is applicable when the torque is increased by combining a larger-capacity servo amplifier.

HK-ST_W: Rated speed 2000 [r/min] (Note 1)

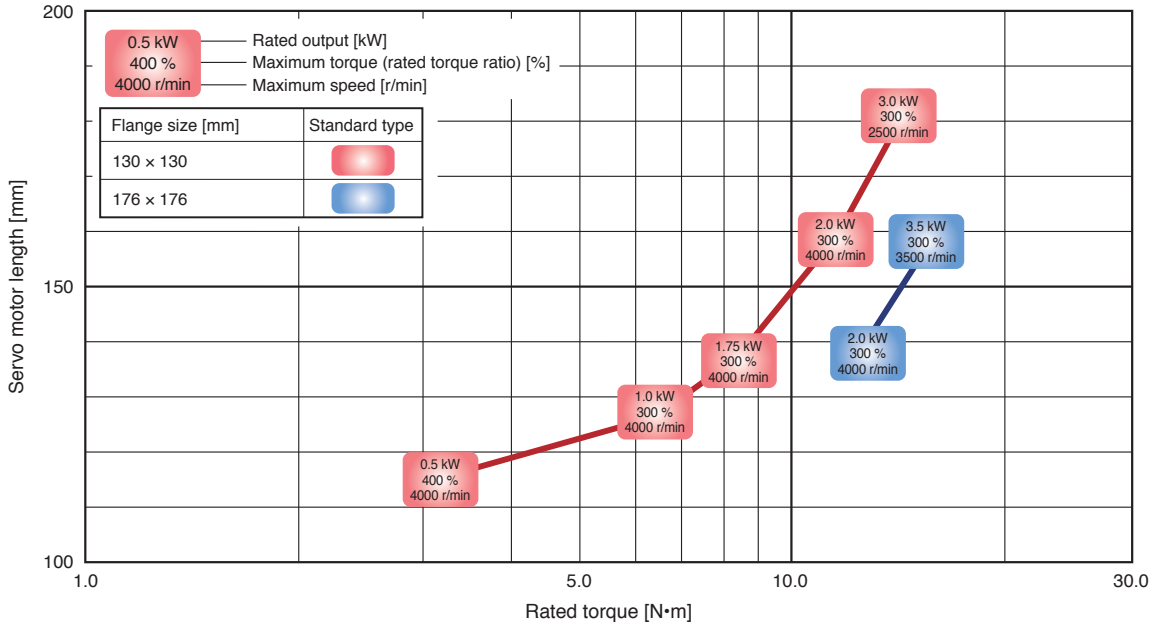

HK-ST_4_W: Rated speed 1000 [r/min]

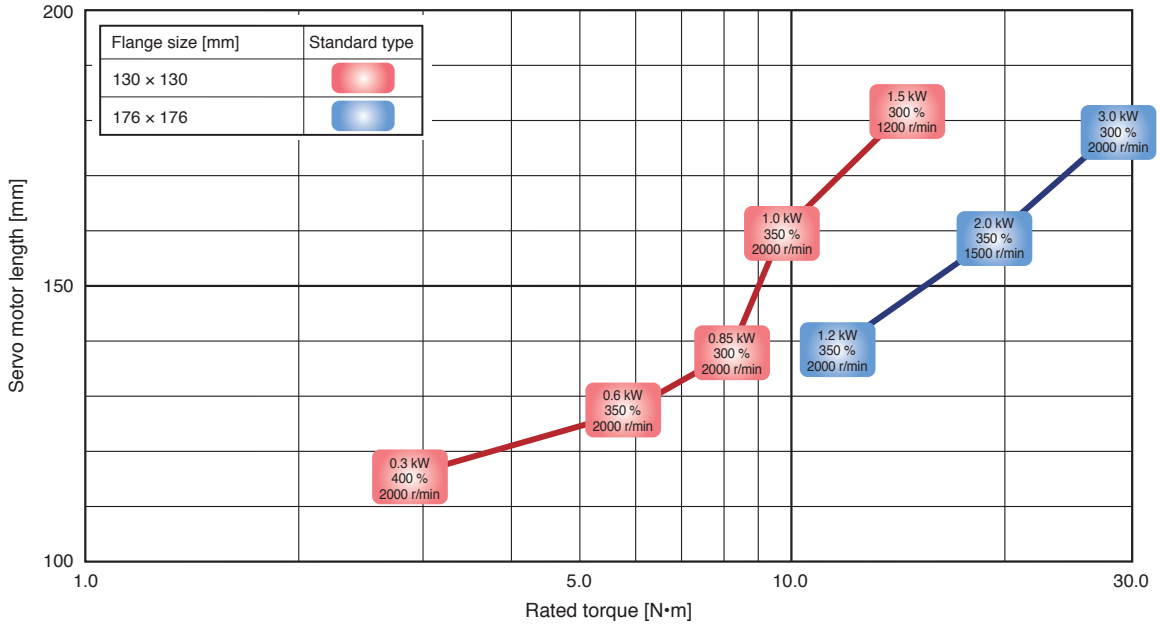

Notes: 1. The rated speed varies by the combined servo amplifiers. Refer to the list of specifications of each rotary servo motor for details.

Rotary Servo Motor Product Lines

The listed values in the table are applicable when combining the servo motors with 200 V AC servo amplifiers.
The values in angle brackets are applicable when the torque is increased by combining a larger-capacity servo amplifier. Refer to "Combinations of Rotary Servo Motors and Servo Amplifiers" in this catalog for the available combinations.

Motor type	Flange size [mm]	Model	Rated output [kW]	Torque [N•m]		Speed [r/min]		Rated power rate (Note 1) [kW/s]
				Rated	Maximum	Rated	Maximum	
HK-ST_W	130 × 130	HK-ST52W	0.5	2.4 (3.2)	7.2 (12.7)	2000 (1500)	4000	9.7 (17.2)
		HK-ST102W	1.0	4.8 (6.4)	14.3 (19.1)	2000 (1500)	4000	26.3 (46.8)
		HK-ST172W	1.75	8.4	25.1	2000	4000	61.2
		HK-ST202AW	2.0	9.5 (11.6)	28.6 (34.7)	2000 (1650)	4000	53.9 (79.2)
		HK-ST302W	3.0	14.3	43.0	2000	2500	91.5
	176 × 176	HK-ST202W	2.0	9.5 (12.7)	28.6 (38.2)	2000 (1500)	4000	25.1 (44.6)
		HK-ST352W	3.5	16.7	50.1	2000	3500	52.1
HK-ST_4_W	130 × 130	HK-ST524W	0.3	2.9	11.5	1000	2000	13.9
		HK-ST1024W	0.6	5.7	17.2 (20.1)	1000	2000	37.9
		HK-ST1724W	0.85	8.1	24.4	1000	2000	57.8
		HK-ST2024AW	1.0	9.5	33.4	1000	2000	53.9
		HK-ST3024W	1.5	14.3	43.0	1000	1200	91.5
	176 × 176	HK-ST2024W	1.2	11.5	40.1	1000	2000	36.1
		HK-ST3524W	2.0	19.1	57.3 (66.8)	1000	1500	68.0
		HK-ST5024W	3.0	28.6	85.9	1000	2000	116

Notes: 1. The values are for the standard servo motors (without an electromagnetic brake). Refer to the list of specifications of each rotary servo motor for details.

Combinations of Rotary Servo Motors and Servo Amplifiers

The maximum torque will be increased by combining the servo amplifiers with a large capacity.
The torque characteristics vary by the combinations. Refer to the list of specifications of each rotary servo motor.

1-axis servo amplifier

○: Standard torque ◎: Torque increased

Rotary servo motor			Servo amplifier MR-J5-_ (200 V)							
			10G/A	20G/A	40G/A	60G/A	70G/A	100G/A	200G/A	350G/A
HK-KT_W	40 × 40	HK-KT053W	○	◎	◎	-	-	-	-	-
		HK-KT13W	○	◎	◎	-	-	-	-	-
		HK-KT1M3W	-	○	◎	◎	-	-	-	-
	60 × 60	HK-KT13UW	○	◎	◎	-	-	-	-	-
		HK-KT23W	-	○	◎	◎	-	-	-	-
		HK-KT43W	-	-	○	○	◎	-	-	-
		HK-KT63W	-	-	-	-	○	○	◎	-
	80 × 80	HK-KT23UW	-	○	◎	◎	-	-	-	-
		HK-KT43UW	-	-	○	○	◎	-	-	-
		HK-KT7M3W	-	-	-	-	○	○	◎	-
		HK-KT103W	-	-	-	-	-	○	◎	◎
	90 × 90	HK-KT7M3UW	-	-	-	-	○	○	◎	-
		HK-KT103UW	-	-	-	-	-	○	◎	◎
		HK-KT153W	-	-	-	-	-	-	○	◎
		HK-KT203W	-	-	-	-	-	-	○	◎
		HK-KT202W	-	-	-	-	-	-	○	◎
HK-KT_4_W	60 × 60	HK-KT434W	-	○	◎	◎	-	-	-	-
		HK-KT634W	-	-	○	○	◎	-	-	-
	80 × 80	HK-KT7M34W	-	-	○	○	◎	-	-	-
		HK-KT1034W	-	-	-	○	◎	◎	-	-
	90 × 90	HK-KT1534W	-	-	-	-	○	○	○	-
		HK-KT2034W	-	-	-	-	-	○	○	○
		HK-KT2024W	-	-	-	-	-	○	○	○
HK-ST_W	130 × 130	HK-ST52W	-	-	-	○	◎	◎	-	-
		HK-ST102W	-	-	-	-	-	○	◎	◎
		HK-ST172W	-	-	-	-	-	-	○	○
		HK-ST202AW	-	-	-	-	-	-	○	◎
		HK-ST302W	-	-	-	-	-	-	-	○
	176 × 176	HK-ST202W	-	-	-	-	-	-	○	◎
		HK-ST352W	-	-	-	-	-	-	-	○
HK-ST_4_W	130 × 130	HK-ST524W	-	-	○	○	○	-	-	-
		HK-ST1024W	-	-	-	○	◎	◎	-	-
		HK-ST1724W	-	-	-	-	-	○	○	○
		HK-ST2024AW	-	-	-	-	-	○	○	○
		HK-ST3024W	-	-	-	-	-	-	○	○
	176 × 176	HK-ST2024W	-	-	-	-	-	-	○	○
		HK-ST3524W	-	-	-	-	-	-	○	◎
		HK-ST5024W	-	-	-	-	-	-	-	○

Combinations of Rotary Servo Motors and Servo Amplifiers

The maximum torque will be increased by combining the servo amplifiers with a large capacity.
The torque characteristics vary by the combinations. Refer to the list of specifications of each rotary servo motor.

Multi-axis servo amplifier

○: Standard torque ◎: Torque increased

Rotary servo motor			Servo amplifier MR-J5W2-				Servo amplifier MR-J5W3-	
			22G	44G	77G	1010G	222G	444G
HK-KT_W	40 × 40	HK-KT053W	◎	◎	-	-	◎	◎
		HK-KT13W	◎	◎	-	-	◎	◎
		HK-KT1M3W	○	◎	-	-	○	◎
	60 × 60	HK-KT13UW	◎	◎	-	-	◎	◎
		HK-KT23W	○	◎	-	-	○	◎
		HK-KT43W	-	○	◎	◎	-	○
		HK-KT63W	-	-	○	○	-	-
	80 × 80	HK-KT23UW	○	◎	-	-	○	◎
		HK-KT43UW	-	○	◎	◎	-	○
		HK-KT7M3W	-	-	○	○	-	-
		HK-KT103W	-	-	-	○	-	-
	90 × 90	HK-KT7M3UW	-	-	○	○	-	-
		HK-KT103UW	-	-	-	○	-	-
HK-KT_4_W	60 × 60	HK-KT434W	○	◎	-	-	○	◎
		HK-KT634W	-	○	◎	◎	-	○
	80 × 80	HK-KT7M34W	-	○	◎	◎	-	○
		HK-KT1034W	-	-	◎	◎	-	-
	90 × 90	HK-KT1534W	-	-	○	○	-	-
		HK-KT2034W	-	-	-	○	-	-
		HK-KT2024W	-	-	-	○	-	-
HK-ST_W	130 × 130	HK-ST52W	-	-	◎	◎	-	-
		HK-ST102W	-	-	-	○	-	-
HK-ST_4_W	130 × 130	HK-ST524W	-	○	○	-	-	○
		HK-ST1024W	-	-	◎	◎	-	-
		HK-ST1724W	-	-	-	○	-	-
		HK-ST2024AW	-	-	-	○	-	-

Combinations of Linear Servo Motors and Servo Amplifiers

1-axis servo amplifier

○: Standard thrust

Linear servo motor			Servo amplifier MR-J5-_							
	Primary side (coil)	Secondary side (magnet)	10G/A	20G/A	40G/A	60G/A	70G/A	100G/A	200G/A	350G/A
LM-H3 series	LM-H3P2A-07P-BSS0	LM-H3S20-288-BSS0 LM-H3S20-384-BSS0 LM-H3S20-480-BSS0 LM-H3S20-768-BSS0	-	-	○	-	-	-	-	-
	LM-H3P3A-12P-CSS0	LM-H3S30-288-CSS0	-	-	○	-	-	-	-	-
	LM-H3P3B-24P-CSS0	LM-H3S30-384-CSS0	-	-	-	-	○	-	-	-
	LM-H3P3C-36P-CSS0	LM-H3S30-480-CSS0	-	-	-	-	○	-	-	-
	LM-H3P3D-48P-CSS0	LM-H3S30-768-CSS0	-	-	-	-	-	-	○	-
	LM-H3P7A-24P-ASS0	LM-H3S70-288-ASS0	-	-	-	-	○	-	-	-
	LM-H3P7B-48P-ASS0	LM-H3S70-384-ASS0	-	-	-	-	-	-	○	-
	LM-H3P7C-72P-ASS0	LM-H3S70-480-ASS0	-	-	-	-	-	-	○	-
	LM-H3P7D-96P-ASS0	LM-H3S70-768-ASS0	-	-	-	-	-	-	-	○
LM-F series	LM-FP2B-06M-1SS0	LM-FS20-480-1SS0 LM-FS20-576-1SS0	-	-	-	-	-	-	○	-
LM-K2 series	LM-K2P1A-01M-2SS1	LM-K2S10-288-2SS1 LM-K2S10-384-2SS1	-	-	○	-	-	-	-	-
	LM-K2P1C-03M-2SS1	LM-K2S10-480-2SS1 LM-K2S10-768-2SS1	-	-	-	-	-	-	○	-
	LM-K2P2A-02M-1SS1	LM-K2S20-288-1SS1 LM-K2S20-384-1SS1	-	-	-	-	○	-	-	-
	LM-K2P2C-07M-1SS1	LM-K2S20-480-1SS1 LM-K2S20-768-1SS1	-	-	-	-	-	-	-	○
	LM-K2P3C-14M-1SS1	LM-K2S30-288-1SS1 LM-K2S30-384-1SS1 LM-K2S30-480-1SS1 LM-K2S30-768-1SS1	-	-	-	-	-	-	-	○
LM-U2 series	LM-U2PAB-05M-0SS0	LM-U2SA0-240-0SS0	-	○	-	-	-	-	-	-
	LM-U2PAD-10M-0SS0	LM-U2SA0-300-0SS0	-	-	○	-	-	-	-	-
	LM-U2PAF-15M-0SS0	LM-U2SA0-420-0SS0	-	-	○	-	-	-	-	-
	LM-U2PBB-07M-1SS0	LM-U2SB0-240-1SS1	-	○	-	-	-	-	-	-
	LM-U2PBD-15M-1SS0	LM-U2SB0-300-1SS1	-	-	-	○	-	-	-	-
	LM-U2PBF-22M-1SS0	LM-U2SB0-420-1SS1	-	-	-	-	○	-	-	-
	LM-U2P2B-40M-2SS0	LM-U2S20-300-2SS1	-	-	-	-	-	-	○	-
	LM-U2P2C-60M-2SS0	LM-U2S20-480-2SS1	-	-	-	-	-	-	-	○

Combinations of Linear Servo Motors and Servo Amplifiers

Multi-axis servo amplifier

○: Standard thrust

Linear servo motor			Servo amplifier MR-J5W2-				Servo amplifier MR-J5W3-	
	Primary side (coil)	Secondary side (magnet)	22G	44G	77G	1010G	222G	444G
LM-H3 series	LM-H3P2A-07P-BSS0	LM-H3S20-288-BSS0 LM-H3S20-384-BSS0 LM-H3S20-480-BSS0 LM-H3S20-768-BSS0	-	○	○	○	-	○
	LM-H3P3A-12P-CSS0	LM-H3S30-288-CSS0 LM-H3S30-384-CSS0 LM-H3S30-480-CSS0 LM-H3S30-768-CSS0	-	○	○	○	-	○
	LM-H3P3B-24P-CSS0		-	-	○	○	-	-
	LM-H3P3C-36P-CSS0		-	-	○	○	-	-
	LM-H3P7A-24P-ASS0	LM-H3S70-288-ASS0 LM-H3S70-384-ASS0 LM-H3S70-480-ASS0 LM-H3S70-768-ASS0	-	-	○	○	-	-
LM-K2 series	LM-K2P1A-01M-2SS1	LM-K2S10-288-2SS1 LM-K2S10-384-2SS1 LM-K2S10-480-2SS1 LM-K2S10-768-2SS1	-	○	○	○	-	○
	LM-K2P2A-02M-1SS1	LM-K2S20-288-1SS1 LM-K2S20-384-1SS1 LM-K2S20-480-1SS1 LM-K2S20-768-1SS1	-	-	○	○	-	-
LM-U2 series	LM-U2PAB-05M-0SS0	LM-U2SA0-240-0SS0 LM-U2SA0-300-0SS0 LM-U2SA0-420-0SS0	○	○	-	-	○	○
	LM-U2PAD-10M-0SS0		-	○	○	○	-	○
	LM-U2PAF-15M-0SS0		-	○	○	○	-	○
	LM-U2PBB-07M-1SS0	LM-U2SB0-240-1SS1 LM-U2SB0-300-1SS1 LM-U2SB0-420-1SS1	○	○	-	-	○	○
	LM-U2PBD-15M-1SS0		-	-	○	○	-	-
	LM-U2PBF-22M-1SS0		-	-	○	○	-	-

Combinations of Direct Drive Motors and Servo Amplifiers

The maximum torque will be increased by combining the servo amplifiers with a large capacity.
The torque characteristics vary by the combinations. Refer to the list of specifications of each direct drive motor.

1-axis servo amplifier

○: Standard torque ◎: Torque increased

Direct drive motor (Note 1)		Servo amplifier MR-J5-_					
		20G/A	40G/A	60G/A	70G/A	100G/A	350G/A
TM-RG2M/ TM-RU2M series	TM-RG2M002C30 TM-RU2M002C30	○	-	-	-	-	-
	TM-RG2M004E30 TM-RU2M004E30	○	◎	-	-	-	-
	TM-RG2M009G30 TM-RU2M009G30	-	○	-	-	-	-
TM-RFM series	TM-RFM002C20	○	-	-	-	-	-
	TM-RFM004C20	-	○	-	-	-	-
	TM-RFM006C20	-	-	○	-	-	-
	TM-RFM006E20	-	-	○	-	-	-
	TM-RFM012E20	-	-	-	○	-	-
	TM-RFM018E20	-	-	-	-	○	-
	TM-RFM012G20	-	-	-	○	-	-
	TM-RFM048G20	-	-	-	-	-	○
	TM-RFM072G20	-	-	-	-	-	○
	TM-RFM040J10	-	-	-	○	-	-
	TM-RFM120J10	-	-	-	-	-	○

Multi-axis servo amplifier

○: Standard torque ◎: Torque increased

Direct drive motor (Note 1)		Servo amplifier MR-J5W2-				Servo amplifier MR-J5W3-	
		22G	44G	77G	1010G	222G	444G
TM-RG2M/ TM-RU2M series	TM-RG2M002C30 TM-RU2M002C30	○	○	-	-	○	○
	TM-RG2M004E30 TM-RU2M004E30	○	◎	-	-	○	◎
	TM-RG2M009G30 TM-RU2M009G30	-	○	○	○	-	○
TM-RFM series	TM-RFM002C20	○	○	-	-	○	○
	TM-RFM004C20	-	○	○	○	-	○
	TM-RFM006C20	-	-	○	○	-	-
	TM-RFM006E20	-	-	○	○	-	-
	TM-RFM012E20	-	-	○	○	-	-
	TM-RFM018E20	-	-	-	○	-	-
	TM-RFM012G20	-	-	○	○	-	-
	TM-RFM040J10	-	-	○	○	-	-

Notes: 1. Use the direct drive motors manufactured in June 2019 or later.

Environment

Motion module

Item	Operation/transportation	Storage
Ambient temperature	0 ˚C to 55 ˚C (when not using the extended temperature range base unit) 0 ˚C to 60 ˚C (when using the extended temperature range base unit) (Note 5)	-25 ˚C to 75 ˚C (non-freezing)
Ambient humidity	5 %RH to 95 %RH (non-condensing)	
Ambience	Indoors (no direct sunlight); no corrosive gas, inflammable gas, oil mist or dust	
Altitude	2000 m or less	
Vibration resistance	Under intermittent vibration (directions of X, Y, and Z axes): 5 Hz to 8.4 Hz, displacement amplitude 3.5 mm 8.4 Hz to 150 Hz, acceleration amplitude 9.8 m/s^2 Under continuous vibration: 5 Hz to 8.4 Hz, displacement amplitude 1.75 mm 8.4 Hz to 150 Hz, acceleration amplitude 4.9 m/s^2	

Servo amplifier

Item	Operation	Transportation	Storage
Ambient temperature	0 ˚C to 60 ˚C (non-freezing) Class 3K3 (IEC 60721-3-3)	-25 ˚C to 70 ˚C (non-freezing) Class 2K3 (IEC 60721-3-2)	-25 ˚C to 70 ˚C (non-freezing) Class 1K3 (IEC 60721-3-1)
Ambient humidity	5 %RH to 95 %RH (non-condensing)		
Ambience	Indoors (no direct sunlight); no corrosive gas, inflammable gas, oil mist or dust		
Altitude/atmospheric pressure	Altitude: 2000 m or less (Note 3)	Overland/sea transportation, or transporting on an airplane whose cargo compartment is pressurized at 700 hPa or higher	Atmospheric pressure: 700 hPa to 1060 hPa (Equivalent to altitudes from -400 m to 3000 m)
Vibration resistance	Under intermittent vibration: 10 Hz to 57 Hz, displacement amplitude 0.075 mm 57 Hz to 150 Hz, acceleration amplitude 9.8 m/s^2 Class 3M1 (IEC 60721-3-3) Under continuous vibration: 10 Hz to 55 Hz, acceleration amplitude 5.9 m/s^2	2 Hz to 8 Hz, displacement amplitude (single amplitude) 7.5 mm 8 Hz to 200 Hz, acceleration amplitude 20 m/s^2 Class 2M3 (IEC 60721-3-2)	2 Hz to 9 Hz, displacement amplitude (single amplitude) 1.5 mm 9 Hz to 200 Hz, acceleration amplitude 5 m/s^2 Class 1M2 (IEC 60721-3-1)

Rotary servo motor

Item	Operation	Transportation/storage
Ambient temperature	0 ˚C to 60 ˚C (non-freezing) (Note 2)	-15 ˚C to 70 ˚C (non-freezing)
Ambient humidity	10 %RH to 90 %RH (non-condensing)	
Ambience (Note 1)	Indoors (no direct sunlight); no corrosive gas, inflammable gas, oil mist or dust, no object generating a strong magnetic field	
Altitude	2000 m or less (Note 3)	
External magnetic field	10 mT or less	
Vibration resistance	Refer to the specifications of each rotary servo motor.	

Linear servo motor

Item	Operation	Transportation/storage
Ambient temperature	0 ˚C to 40 ˚C (non-freezing)	-15 ˚C to 70 ˚C (non-freezing)
Ambient humidity	10 %RH to 80 %RH (non-condensing)	10 %RH to 90 %RH (non-condensing)
Ambience	Indoors (no direct sunlight); no corrosive gas, inflammable gas, oil mist or dust	
Altitude	1000 m or less	
Vibration resistance	Refer to the specifications of each linear servo motor.	

Direct drive motor

Item	Operation	Transportation/storage
Ambient temperature	0 ˚C to 40 ˚C (non-freezing)	-15 ˚C to 70 ˚C (non-freezing)
Ambient humidity	10 %RH to 80 %RH (non-condensing)	10 %RH to 90 %RH (non-condensing)
Ambience (Note 1, 4)	Indoors (no direct sunlight); no corrosive gas, inflammable gas, oil mist or dust	
Altitude	2000 m or less (Note 3)	
Vibration resistance	Refer to the specifications of each direct drive motor.	

Notes: 1. Do not use the rotary servo motors in the environment where the servo motor is exposed to oil mist, oil and/or water.
2. Refer to "Rotary Servo Motor User's Manual" for the restrictions on the ambient temperature.
3. Refer to user's manual of each servo amplifier and servo motor for the restrictions when using the servo amplifiers and servo motors at an altitude exceeding 1000 m.
4. Do not place any object (such as a magnet) which generates a magnetic force near the direct drive motor. If it is unavoidable, take a measure such as mounting a shielding plate and so on to cut off the magnetic force.
5. RD78GH can be used at an ambient temperature exceeding 55 °C in the future.

Compliance with Global Standards and Regulations

Motion module

Europe	Low voltage directive	-
	EMC directive	EN 61131-2
	Machine directive	-
	RoHS directive	EN 50581
North America	UL standard	UL 61010-1 / UL 61010-2-201
	CSA standard	CSA C22.2 No. 61010-1 / CSA C22.2 No. 61010-2-201
China	National Standard of the People's Republic of China (GB standards)	GB/T15969.2
	Measures for Administration of the Pollution Control of Electronic Information Products (China RoHS)	Article 13 (Names and the content of hazardous substances are described in User's Manuals.) Article 14 (Marking for the Restricted Use of Hazardous Substances is labeled.)
	China Compulsory Certification (CCC)	N/A
Korea	Korea Radio Wave Law (KC)	KN61000-6-2 / KN61000-6-4

Servo amplifier

Europe	Low voltage directive	EN 61800-5-1
	EMC directive	EN 61800-3 Category C2/C3
	Machine directive	EN ISO 13849-1:2015 Category 3 PL e / EN 62061 SIL CL 3 / EN 61800-5-2
	RoHS directive	EN 50581
North America	UL standard	UL 61800-5-1
	CSA standard	CSA C22.2 No. 274
China	National Standard of the People's Republic of China (GB standards)	GB 12668.501, GB 12668.3
	Management Methods for the Restriction of the Use of Hazardous Substances in Electrical and Electronic Products (China RoHS)	Article 13 (Names and the content of hazardous substances are described in User's Manuals.) Article 14 (Marking for the Restricted Use of Hazardous Substances is labeled.)
	China Compulsory Certification (CCC)	N/A
Korea	Korea Radio Wave Law (KC)	KN 61800-3

Rotary servo motor

Europe	Low voltage directive	EN 60034-1
	EMC directive	EN 61800-3 Category C3
	Machine directive	-
	RoHS directive	EN 50581
North America	UL standard	UL 1004-1 / UL 1004-6
	CSA standard	CSA C22.2 No. 100
China	National Standard of the People's Republic of China (GB standards)	GB 755
	Management Methods for the Restriction of the Use of Hazardous Substances in Electrical and Electronic Products (China RoHS)	Article 13 (Names and the content of hazardous substances are described in User's Manuals.) Article 14 (Marking for the Restricted Use of Hazardous Substances is labeled.)
	China Compulsory Certification (CCC)	N/A
Korea	Korea Radio Wave Law (KC)	N/A

Linear servo motor

Europe	Low voltage directive	DIN VDE 0580
	EMC directive	-
	Machine directive	-
	RoHS directive	EN 50581
North America	UL standard	UL 1004-6
	CSA standard	CSA C22.2 No. 100
China	National Standard of the People's Republic of China (GB standards)	Not subject to GB standards
	Management Methods for the Restriction of the Use of Hazardous Substances in Electrical and Electronic Products (China RoHS)	Article 13 (Names and the content of hazardous substances are described in User's Manuals.) Article 14 (Marking for the Restricted Use of Hazardous Substances is labeled.)
	China Compulsory Certification (CCC)	N/A
Korea	Korea Radio Wave Law (KC)	N/A

Direct drive motor

Europe	Low voltage directive	EN 60034-1
	EMC directive	EN 61800-3 Category C3
	Machine directive	-
	RoHS directive	EN 50581
North America	UL standard	UL 1004-1 / UL 1004-6
	CSA standard	CSA C22.2 No. 100
China	National Standard of the People's Republic of China (GB standards)	GB 755
	Management Methods for the Restriction of the Use of Hazardous Substances in Electrical and Electronic Products (China RoHS)	Article 13 (Names and the content of hazardous substances are described in User's Manuals.) Article 14 (Marking for the Restricted Use of Hazardous Substances is labeled.)
	China Compulsory Certification (CCC)	N/A
Korea	Korea Radio Wave Law (KC)	N/A

2 Servo System Controllers

Motion Module/Motion Control Software Available soon 2-2

Engineering Software 2-8

Motion Module/Motion Control Software

Control specifications

Item		Specifications		
		MELSEC iQ-R series		SWM78 Motion Control Software Available soon
		RD78GH Available soon	RD78G	
Maximum number of control axes		RD78GHV: 128 axes RD78GHW: 256 axes	RD78G4: 4 axes RD78G8: 8 axes RD78G16: 16 axes RD78G32: 32 axes RD78G64: 64 axes	16 axes/32 axes/64 axes/ 128 axes/256 axes
Maximum number of connectable stations		120 stations	64 stations	120 stations
Operation cycle (operation cycle settings) (Note 1) [μs]		31.25, 62.5, 125, 250, 500, 1000, 2000, 4000	125, 250, 500, 1000, 2000, 4000	250, 500, 1000, 2000, 4000
Axis		Real drive, virtual drive, virtual linked axis		
	Axes group	0: Unset 1 or later: the axes group No. for the setting axis		
Interpolation function		Linear interpolation (2 to 4 axes), 2-axis circular interpolation		
Control method		Positioning control, direct control		
Acceleration/deceleration process		Trapezoidal acceleration/deceleration, jerk acceleration/deceleration, acceleration/deceleration time fixed method		
Compensation function		Driver unit conversion		
Synchronous control	Module	Master axis, cam, gear		
	Master axis	Real drive axis, virtual drive axis		
Operation profile (cam data)	Cam data	Cam data, cam for a rotary knife		
	Motion control FB (Cam auto-generation)	Cam for a rotary knife		
Control unit		Unit character string and decimal digit can be defined by user. (The following is given units: mm, inch, degree, pulse)		
Programming language		PLC CPU: ladder diagram, function block diagram/ladder diagram, structured text language Motion module: structured text language		C++ language
Backup		Parameters and programs can be saved on a flash ROM (batteryless backup)		Storage of IPC
Start/stop operation		Start, stop, restart, buffer mode, forced stop		
Homing	Homing method	Driver homing method (use the homing method set in the driver.) Data set method		
Positioning control	Linear control	Linear interpolation (2 to 4 axes)		
	2-axis circular interpolation	Border point-specified, central point-specified, radius-specified circular interpolation		
Manual control	JOG operation	Provided		
Direct control	Speed control (Note 2)	Speed control not including positioning loop, Speed control including position loop		
	Torque control (Note 2)	Torque control		
Absolute position system		Provided (batteryless)		
Functions that limit control	Speed limit	Speed command range		
	Torque limit	Torque limit value (forward direction, negative direction)		
	Forced stop	Valid/Invalid setting		
	Software stroke limit	Movable range check with current feed value, movable range check with machine feed value		
	Hardware stroke limit	Provided		
Functions that change control details	Command speed change	Provided		
	Current value change	Provided		
	Acceleration/deceleration process change	Acceleration/deceleration, acceleration/deceleration time		
	Torque limit value change	Provided		
	Target position change	Target position change, movement distance change		
Other functions	History data	Event history		
	Logging	Data logging		
	Slave emulate	Provided		

Notes: 1. The number of controllable axes varies depending on the operation cycle.
2. These are the functions of Motion modules.

Motion Module/Motion Control Software

CC-Link IE TSN

Item		Specifications		
		MELSEC iQ-R series		SWM78 Motion Control Software Available soon
		RD78GH Available soon	RD78G	
Communications speed	[bps]	1 G		
Maximum stations per network		121 stations (including the master station)	65 stations (including the master station)	121 stations (including the master station)
Connection cable		Ethernet cable (category 5e or higher, double shielded/STP) straight cable		
Maximum distance between stations	[m]	100		
Maximum number of networks		239		
Topology (Note 1)		Line type, star type, line/star mixed type		
Communications methods		Time-sharing method		
Maximum transient transmission capacity		1920 bytes		

Notes: 1. Use a switching hub (authentication class: B) for star topology.

Certified Class

CC-Link IE TSN certifies nodes and switches to a specific class level according to its functionality and performance classification. Products can be classified as either class A or B. For the certified classification of each product, please check the CC-Link partner association website or the relevant product catalog or manual. Supported functions and system configuration may differ according to the certified class of products used. For example, products compatible with certified class B are necessary to configure a high-speed motion control system. For details of configuring systems with both class A and class B devices, please refer to relevant master product manual.

System configuration

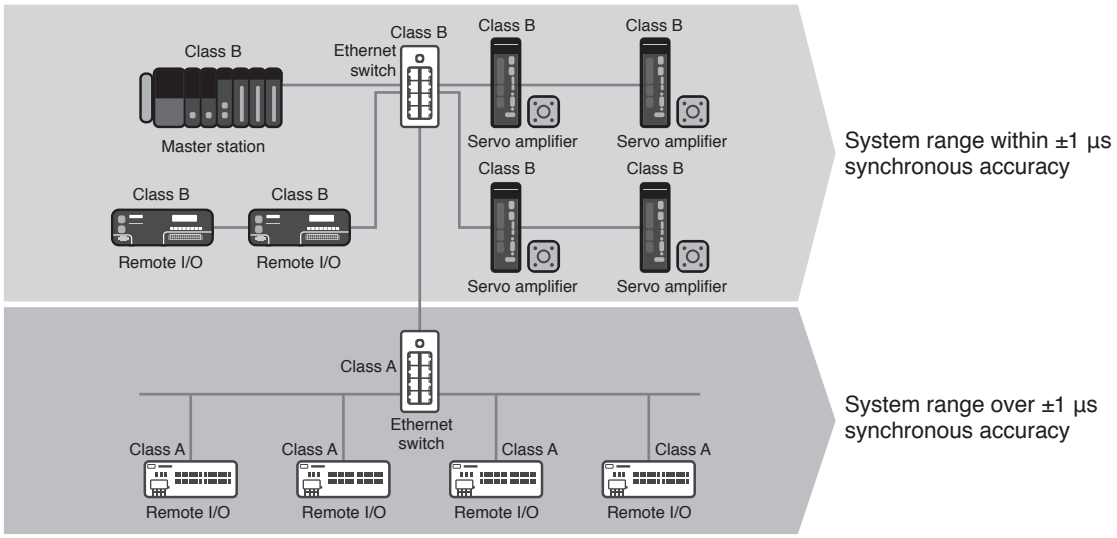

- Synchronous accuracy of a system varies relative to the combination of connected devices and switches certification class
- Use class B devices when configuring a system within ±1 µs high-accuracy synchronization, connect class A devices to a separate branch line from class B devices (for details of system configuration, please refer to relevant master product manual)

Motion Module

Module specifications

Item	RD78GH Available soon	RD78G
Maximum number of control axes	RD78GHV: 128 axes RD78GHW: 256 axes	RD78G4: 4 axes RD78G8: 8 axes RD78G16: 16 axes RD78G32: 32 axes RD78G64: 64 axes
Maximum number of connectable stations	120 stations	64 stations
Servo amplifier connection method	CC-Link IE TSN	
Authentication class	B	B
Maximum distance between stations [m]	100	
PERIPHERAL I/F	Via CPU module (USB, Ethernet)	
Extended memory	SD memory card	
Number of ports for CC-Link IE TSN	2 ports	1 port
Number of I/O points occupied	32 points + 16 points (empty slot)	32 points
Number of slots occupied	2 slots	1 slot
5 V DC internal current consumption [A]	2.33	1.93
Mass [kg]	0.44	0.26
Dimensions [mm]	106.0 (H) × 56.0 (W) × 110.0 (D)	106.0 (H) × 27.8 (W) × 110.0 (D)

Program specifications

Item		RD78GH Available soon	RD78G
Program capacity		Built-in ROM max. 64 [MB] + SD memory card	Built-in ROM max. 16 [MB] + SD memory card
Maximum program capacity memory		RD78G: 96 [MB], RD78GH: 160 [MB]	
Variable memory	Label area	ST language program capacity and label memory capacity are settable.	
Data memory		- (equivalent to program capacity)	
Maximum number of files	Program	2048 files (1 program definable per file)	
	FB/FUN	128 files (64 FBs/FUNs definable per file)	
	Global label	1 file (16384000 labels definable per file)	
Code size per program		- (depends on the program memory)	

Synchronous control specifications

FB	Description
MC_CamIn	Starts cam operation.
MC_GearIn	Starts gear operation.
MC_CombineAxes	Combines the motion of 2 axes.
MCv_ChangeCycle	Changes the current value per cycle.
MCv_SmoothingFilter	Enables smoothing filter.

Notes: 1. The number of usable function blocks depends on the program capacity.

Operation profile (cam) specifications

Item		RD78GH Available soon	RD78G
Memory capacity		Built-in ROM max. 64 [MB] + SD memory card	Built-in ROM max. 16 [MB] + SD memory card
Maximum number of cam registration		60000 (1024 out of 60000 can be set on engineering tool)	
Cam data	Cam type	Cam data, cam for a rotary knife	
	Interpolation method	Section interpolation, linear interpolation, spline interpolation	
	Profile ID	1 to 60000	
	Resolution	8 to 65535 (any resolution within the range)	
	Units for length per cycle	mm, inch, pulse, degree, or user-defined units	
	Units for stroke	%, mm, inch, pulse, degree, or user-defined units	
Cam auto-generation		Cam for a rotary knife	

Motion Module

Function blocks (FB) list

Type	Name	Description
MCFB (motion)	MC_CamIn	Starts cam operation.
	MC_CombineAxes	Combines the motion of 2 axes.
	MC_GearIn	Starts gear operation.
	MC_GroupStop	Executes a forced stop for an axes group.
	MC_Home	Executes homing.
	MC_MoveAbsolute	Executes positioning (absolute).
	MC_MoveRelative	Executes positioning (relative).
	MC_MoveVelocity	Executes speed control.
	MC_Stop	Executes a forced stop.
	MC_TorqueControl	Torque control
	MCv_Jog	Executes JOG operation
	MCv_MoveCircularInterpolateAbsolute	Executes circular interpolation control (absolute).
	MCv_MoveCircularInterpolateRelative	Executes circular interpolation control (relative).
	MCv_MoveLinearInterpolateAbsolute	Executes linear interpolation control (absolute).
	MCv_MoveLinearInterpolateRelative	Executes linear interpolation control (relative).
	MCv_SmoothingFilter	Enables smoothing filter.
	MCv_SpeedControl	Executes speed control (including position loop).
MCFB (administrative)	MC_CamTableSelect	Selects cam tables.
	MC_GroupDisable	Disables an axes group.
	MC_GroupEnable	Enables an axes group.
	MC_Power	Controls the power stage (ON or OFF) for a single axis.
	MC_SetPosition	Changes the current position.
	MCv_AllPower	Controls the power stage (ON or OFF) for all axes.
	MCv_ChangeCycle	Changes the current value per cycle.
	MCv_SetTorqueLimit	Sets torque limits.
General FB	MCv_ReadProfileData	Reads profile data.
	MCv_WriteProfileData	Writes profile data.

Motion Module

Dimensions

●RD78G4/RD78G8/RD78G16/
RD78G32/RD78G64

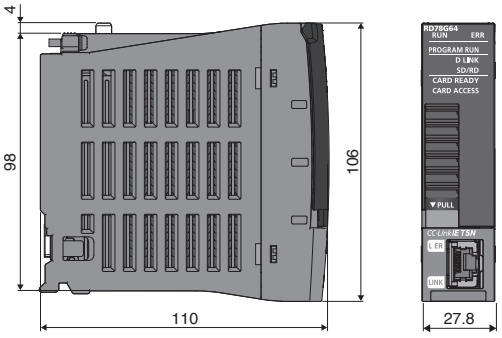

[Unit: mm]

●RD78GHV/RD78GHW Available soon

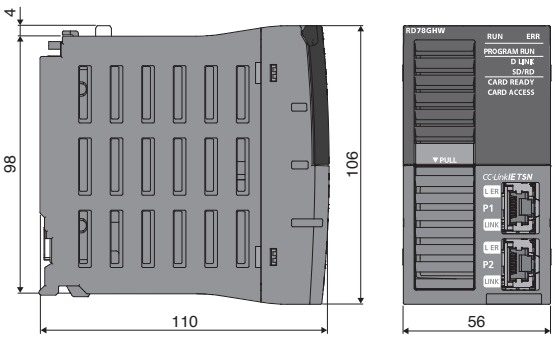

[Unit: mm]

Mounting

●RD78G4/RD78G8/RD78G16/RD78G32/RD78G64
RD78GHV/RD78GHW Available soon

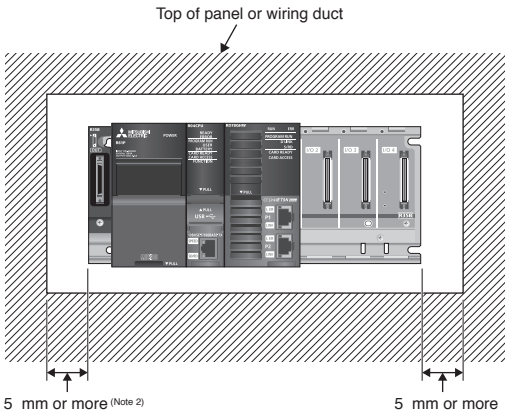

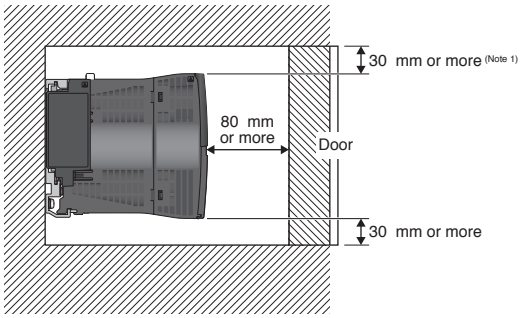

Notes: 1. Provide clearance of 30 mm or more when the height of a wiring duct is 50 mm or less. In other cases, provide clearance of 40 mm or more.
2. Provide clearance of 20 mm or more when an extension cable is connected/removed without removing a power supply module.

SWM78 Motion Control Software (Note 1) Available soon

MELSOFT EM Configurator2 operating environment

Item		Description
Personal computer	Personal computer	Microsoft® Windows® supported personal computer
	OS	Microsoft® Windows® 10 (Home, Pro, Enterprise, Education, IoT) (64 bit/32 bit) Microsoft® Windows® 8.1 (64 bit/32 bit), Microsoft® Windows® 8.1 (Enterprise, Pro) (64 bit/32 bit) Microsoft® Windows® 7 (Enterprise, Ultimate, Professional, Home Premium, Starter) (64 bit/32 bit)
	CPU	Intel® Core™2 Duo Processor 2 GHz or more recommended
	Required memory	For 64-bit edition: 2 GB or more recommended For 32-bit edition: 1 GB or more recommended
Available hard disk capacity		For installation: 10 GB or more free hard disk capacity For operation: 512 MB or more free virtual memory capacity
Optical drive		DVD-ROM supported disk drive
Monitor		Resolution 1024 × 768 pixels or higher

Notes: 1. To use Motion Control Software, prepare MELSOFT EM78 SDK and the USB key with license information.

SWM78 Motion Control Software application development environment

Item		Description
User program OS	Windows®	Microsoft® Windows® 10 Home (64 bit/32 bit) Microsoft® Windows® 10 Enterprise (64 bit/32 bit) Microsoft® Windows® 10 Pro (64 bit/32 bit) Microsoft® Windows® 10 Education (64 bit/32 bit) Microsoft® Windows® 10 IoT (64 bit/32 bit) Microsoft® Windows® 8.1 (64 bit/32 bit) Microsoft® Windows® 8.1 Enterprise (64 bit/32 bit) Microsoft® Windows® 8.1 Pro (64 bit/32 bit) Microsoft® Windows® 7 Home Basic (64 bit/32 bit) Microsoft® Windows® 7 Home Premium (64 bit/32 bit) Microsoft® Windows® 7 Enterprise SP1 (64 bit/32 bit) Microsoft® Windows® 7 Ultimate SP1 (64 bit/32 bit) Microsoft® Windows® 7 Professional SP1 (64 bit/32 bit)
	INtime	INtime 6. 3. 18110. 7
Software development environment		Microsoft® Visual C++® 2017/2015/2013/2012/2010
API library		- DLL format - Supports programs compiled by C++ only
Servo amplifier connection method		CC-Link IE TSN
Authentication class		B

Partner products

INtime® TenAsys Corporation

Real-time motion control is realized by Windows® PC.

INtime is the real-time OS products which extend real-time performance for Windows® PC.
Real-time control is realizable only by installing in usual Windows® PC.
Since parallel operation is carried out with Windows®, both the Windows® side processings, such as HMI and log file save, and the machine control processings which needs real-time performance are able to be realized on one set of hardware.

An inquiry of a product

Micronet Company
URL : http://www.mnc.co.jp/index_E.htm
MAIL : bcd@mnc.co.jp

Engineering Software

MELSOFT GX Works3 operating environment (Note 1)

Item	Description
OS	Microsoft® Windows® 10 (Home, Pro, Enterprise, Education, IoT Enterprise 2016 LTSB (Note 2)) (64 bit/32 bit) Microsoft® Windows® 8.1 (64 bit/32 bit) , Microsoft® Windows® 8.1 (Enterprise, Pro) (64 bit/32 bit) Microsoft® Windows® 7 (Enterprise, Ultimate, Professional, Home Premium, Starter) (64 bit/32 bit)
CPU	Intel® Core™2 Duo Processor 2 GHz or more recommended
Personal computer	Windows® supported personal computer
Required memory	For 64-bit edition: 2 GB or more recommended For 32-bit edition: 1 GB or more recommended
Available hard disk capacity	For installation: 17 GB or more free hard disk capacity For operation: 512 MB or more free virtual memory capacity
Optical drive	DVD-ROM supported disk drive
Monitor	Resolution 1024 × 768 pixels or higher

Notes: 1. Refer to Installation Instructions for precautions and restrictions regarding the operating environment.
2. The 32-bit edition is not supported.

Engineering software list

Item	Model	Description	
MELSOFT GX Works3	SW1DND-GXW3-E	• Programmable Controller Engineering Software [MELSOFT GX Works3 (Note 2), GX Works2, GX Developer, PX Developer]	DVD-ROM
MELSOFT iQ Works	SW2DND-IQWK-E	FA engineering software (Note 1) • System Management Software [MELSOFT Navigator] • Programmable Controller Engineering Software [MELSOFT GX Works3 (Note 2), GX Works2, GX Developer, PX Developer] • Motion Controller Engineering Software [MELSOFT MT Works2] • Screen Design Software [MELSOFT GT Works3] • Robot Programming Software [MELSOFT RT ToolBox3] • Inverter Setup Software [MELSOFT FR Configurator2]	DVD-ROM

Notes: 1. Refer to each product manual for the software supported by the model.
2. The MELSOFT GX Works3 menu is switchable between Japanese, English, and simplified Chinese.

3 Servo Amplifiers

Model Designation 3-2
MR-J5-G/MR-J5-G-RJ Connections with Peripheral Equipment 3-3
MR-J5-G/MR-J5-G-RJ Specifications 3-4
MR-J5-G/MR-J5-G-RJ Standard Wiring Diagram Example 3-5
STO I/O Signal Connector (CN8) Connection Example 3-6
Main/Control Circuit Power Supply Connection Example 3-7
Servo Motor Connection Example 3-8
MR-J5-G/MR-J5-G-RJ Dimensions 3-13

MR-J5W2-G/MR-J5W3-G Connections with Peripheral Equipment 3-15
MR-J5W2-G/MR-J5W3-G Specifications 3-16
MR-J5W2-G/MR-J5W3-G Standard Wiring Diagram Example 3-18
Main/Control Circuit Power Supply Connection Example 3-20
Servo Motor Connection Example 3-21
MR-J5W2-G/MR-J5W3-G Dimensions 3-24

MR-J5-A/MR-J5-A-RJ Connections with Peripheral Equipment 3-26
MR-J5-A/MR-J5-A-RJ Specifications 3-27
MR-J5-A/MR-J5-A-RJ Standard Wiring Diagram Example 3-29
MR-J5-A/MR-J5-A-RJ Dimensions 3-32

G MR-J5-G **G-RJ** MR-J5-G-RJ **WG** MR-J5W2-G/MR-J5W3-G **A** MR-J5-A **A-RJ** MR-J5-A-RJ

* MR-J5-G-RJ and MR-J5-A-RJ are planned for a future release.
* Refer to p. 7-55 in this catalog for conversion of units.

Model Designation for 1-Axis Servo Amplifier (Note 1)

G | G-RJ | A | A-RJ

M R - J 5 - 1 0 G _ - _

Mitsubishi Electric AC servo amplifier MELSERVO-J5 Series

Symbol	Special specification
None	Standard
RJ	Future release planned

Symbol	Power supply
None	3-phase 200 V AC, 1-phase 200 V AC, or DC input

Symbol	Interface
G	CC-Link IE TSN
A	General-purpose

Symbol	Rated output [kW]
10	0.1
20	0.2
40	0.4
60	0.6
70	0.75
100	1
200	2
350	3.5

Model Designation for Multi-Axis Servo Amplifier (Note 1)

WG

M R - J 5 W 2 - 2 2 G _

Mitsubishi Electric AC servo amplifier MELSERVO-J5 Series

Symbol	Main circuit power supply
None	3-phase 200 V AC, 1-phase 200 V AC, or DC input

Symbol	Interface
G	CC-Link IE TSN

Symbol	Rated output [kW]		
	A-axis (Note 2)	B-axis (Note 2)	C-axis (Note 2)
22	0.2	0.2	-
44	0.4	0.4	-
77	0.75	0.75	-
1010	1	1	-
222	0.2	0.2	0.2
444	0.4	0.4	0.4

Symbol	Number of axes
W2	2 axes
W3	3 axes

Notes: 1. This section describes what each symbol in a model name indicates. Some combinations of symbols are not available.
2. A-axis, B-axis, and C-axis indicate names of axes of the multi-axis servo amplifier. The C-axis is available for the 3-axis servo amplifier.

MR-J5-G/MR-J5-G-RJ Connections with Peripheral Equipment (Note 1)

G G-RJ

Peripheral equipment is connected to MR-J5-G/MR-J5-G-RJ as described below. Connectors, cables, options, and other necessary equipment are available so that users can set up the servo amplifier easily and start using it right away.

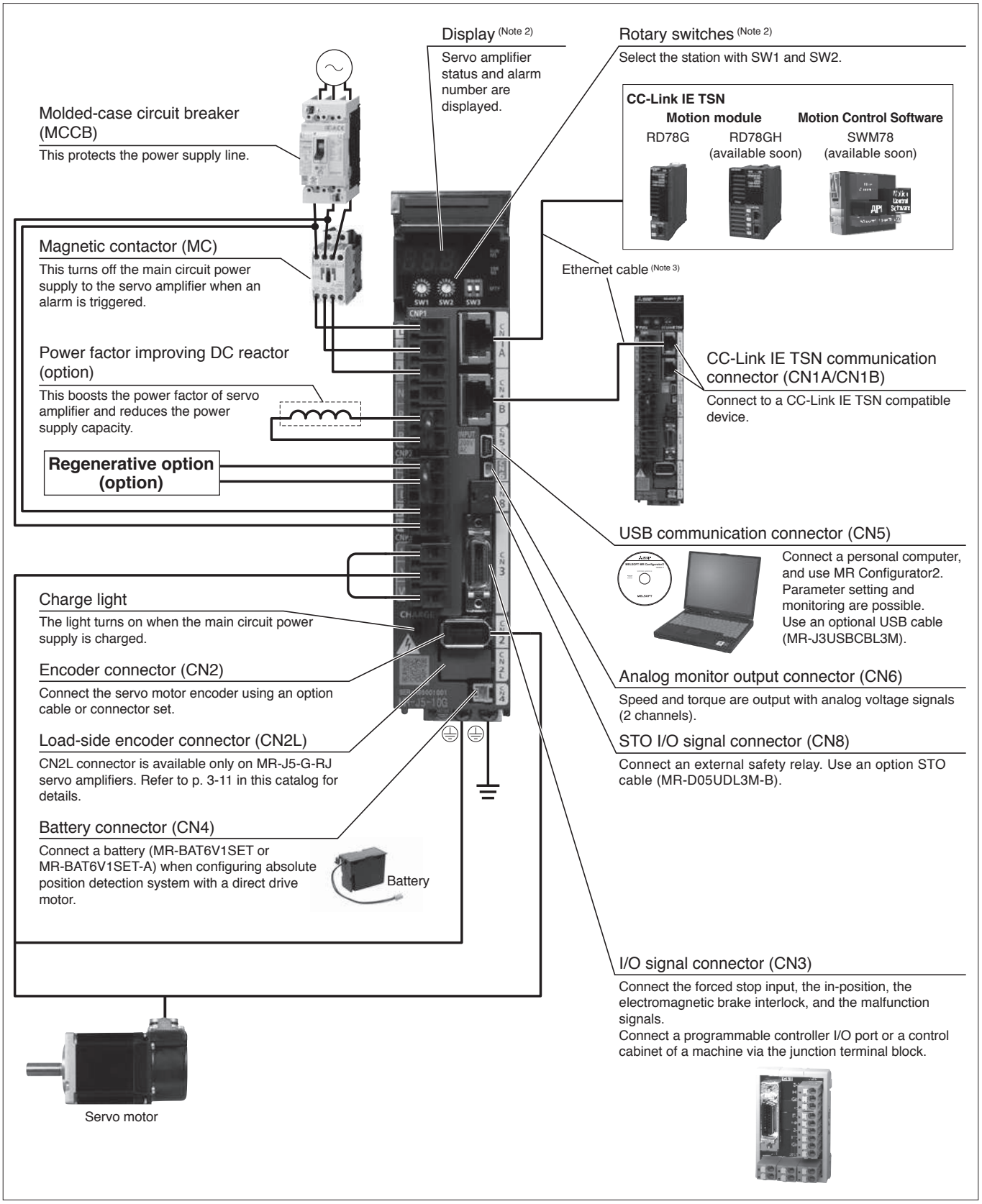

Notes: 1. Refer to "MR-J5 User's Manual" for the actual connections.
2. This picture shows when the display cover is open.
3. For specifications of the Ethernet cable, refer to "Ethernet Cable Specifications" on p. 7-26 in this catalog.

MR-J5-G/MR-J5-G-RJ (CC-Link IE TSN) Specifications

G G-RJ

Servo amplifier model MR-J5-_(-RJ)			10G	20G	40G	60G	70G	100G	200G	350G
Output	Voltage		3-phase 0 V AC to 240 V AC							
	Rated current	[A]	1.3	1.8	2.8	3.2	5.8	6.0	11.0	17.0
Main circuit power supply input	Voltage/ frequency (Note 1)	AC input	3-phase or 1-phase 200 V AC to 240 V AC, 50 Hz/60 Hz					3-phase or 1-phase 200 V AC to 240 V AC, 50 Hz/60 Hz (Note 7)		3-phase 200 V AC to 240 V AC, 50 Hz/60 Hz
		DC input (Note 8)	283 V DC to 340 V DC							
	Rated current (Note 6)	[A]	0.9	1.5	2.6	3.2	3.8	5.0	10.5	16.0
	Permissible voltage fluctuation	AC input	3-phase or 1-phase 170 V AC to 264 V AC					3-phase or 1-phase 170 V AC to 264 V AC (Note 7)		3-phase 170 V AC to 264 V AC
		DC input (Note 8)	241 V DC to 374 V DC							
	Permissible frequency fluctuation		±5 % maximum							
Control circuit power supply input	Voltage/ frequency	AC input	1-phase 200 V AC to 240 V AC, 50 Hz/60 Hz							
		DC input (Note 8)	283 V DC to 340 V DC							
	Rated current	[A]	0.2							
	Permissible voltage fluctuation	AC input	1-phase 170 V AC to 264 V AC							
		DC input (Note 8)	241 V DC to 374 V DC							
	Permissible frequency fluctuation		±5 % maximum							
	Power consumption	[W]	30							
Interface power supply			24 V DC ± 10 % (required current capacity: 0.3 A (including CN8 connector signals))							
Control method			Sine-wave PWM control/current control method							
Permissible regenerative power of the built-in regenerative resistor (Note 2, 3)		[W]	-	10			30		100	
Dynamic brake (Note 4)			Built-in							
CC-Link IE TSN	Communication cycle (Note 10)		31.25 µs, 62.5 µs, 125 µs, 250 µs, 500 µs, 1 ms, 2 ms, 4 ms							
	Authentication class		Class B							
Communication function	USB		Connect a personal computer (MR Configurator2 compatible)							
Encoder output pulse			Compatible (A/B/Z-phase pulse)							
Analog monitor			2 channels							
Servo functions			Advanced vibration suppression control II, adaptive filter II, robust filter, quick tuning, auto tuning, one-touch tuning, tough drive function, drive recorder function, machine diagnosis function (including failure prediction), power monitoring function, lost motion compensation function							
Protective functions			Overcurrent shut-off, regenerative overvoltage shut-off, overload shut-off (electronic thermal), servo motor overheat protection, encoder error protection, regenerative error protection, undervoltage protection, instantaneous power failure protection, overspeed protection, error excessive protection, magnetic pole detection protection, linear servo control fault protection							
Functional safety			STO (IEC/EN 61800-5-2)							
Safety performance	Standards certified by CB (Note 9)		EN ISO 13849-1:2015 Category 3 PL e, IEC 61508 SIL 3, EN 62061 SIL CL 3, EN 61800-5-2							
	Response performance		8 ms or less (STO input OFF → energy shut-off)							
	Test pulse input (STO) (Note 5)		Test pulse interval: 1 Hz to 25 Hz, test pulse off time: 1 ms maximum							
	Mean time to dangerous failure (MTTFd)		MTTFd ≥ 100 [years] (314a)							
	Diagnostic coverage (DC)		DC = Medium, 97.6 [%]							
	Probability of dangerous Failure per Hour (PFH)		PFH = 6.4 × 10^{-9} [1/h]							
Structure (IP rating)			Natural cooling, open (IP20)				Force cooling, open (IP20)			
Close mounting	3-phase power supply input		Possible (Note 11)							
	1-phase power supply input		Possible (Note 11)					Not possible		-
Mass		[kg]	0.8			1.0	1.4		2.2	

Notes:
1. Rated output and speed of a rotary servo motor and a direct drive motor; and continuous thrust and maximum speed of a linear servo motor are applicable when the servo amplifier is operated within the specified power supply voltage and frequency.
2. Select the most suitable regenerative option for your system with our drive system sizing software Motorizer.
3. Refer to "Regenerative Option" in this catalog for the permissible regenerative power [W] when a regenerative option is used.
4. When using the dynamic brake, refer to "MR-J5 User's Manual" for the permissible load to motor inertia ratio and the permissible load to mass ratio.
5. The test pulse is a signal for the external circuit to perform self-diagnosis by turning off the signals to the servo amplifier instantaneously at regular intervals.
6. This value is applicable when a 3-phase power supply is used.
7. When a 1-phase 200 V AC to 240 V AC power supply is used, use the servo amplifiers at 75 % or less of the effective load ratio.
8. For a connection example of power supply circuit with DC input, refer to "MR-J5 User's Manual".
9. The safety level depends on the setting value of [Pr. PF18 STO diagnosis error detection time] and whether or not STO input diagnosis is performed by TOFB output. Refer to "MR-J5 User's Manual" for details.
10. The command communication cycle depends on the controller specifications and the number of axes connected.
11. When the servo amplifiers are closely mounted, keep the ambient temperature within 0 °C to 45 °C, or use the servo amplifiers at 75 % or less of the effective load ratio.

MR-J5-G/MR-J5-G-RJ Standard Wiring Diagram Example

G G-RJ

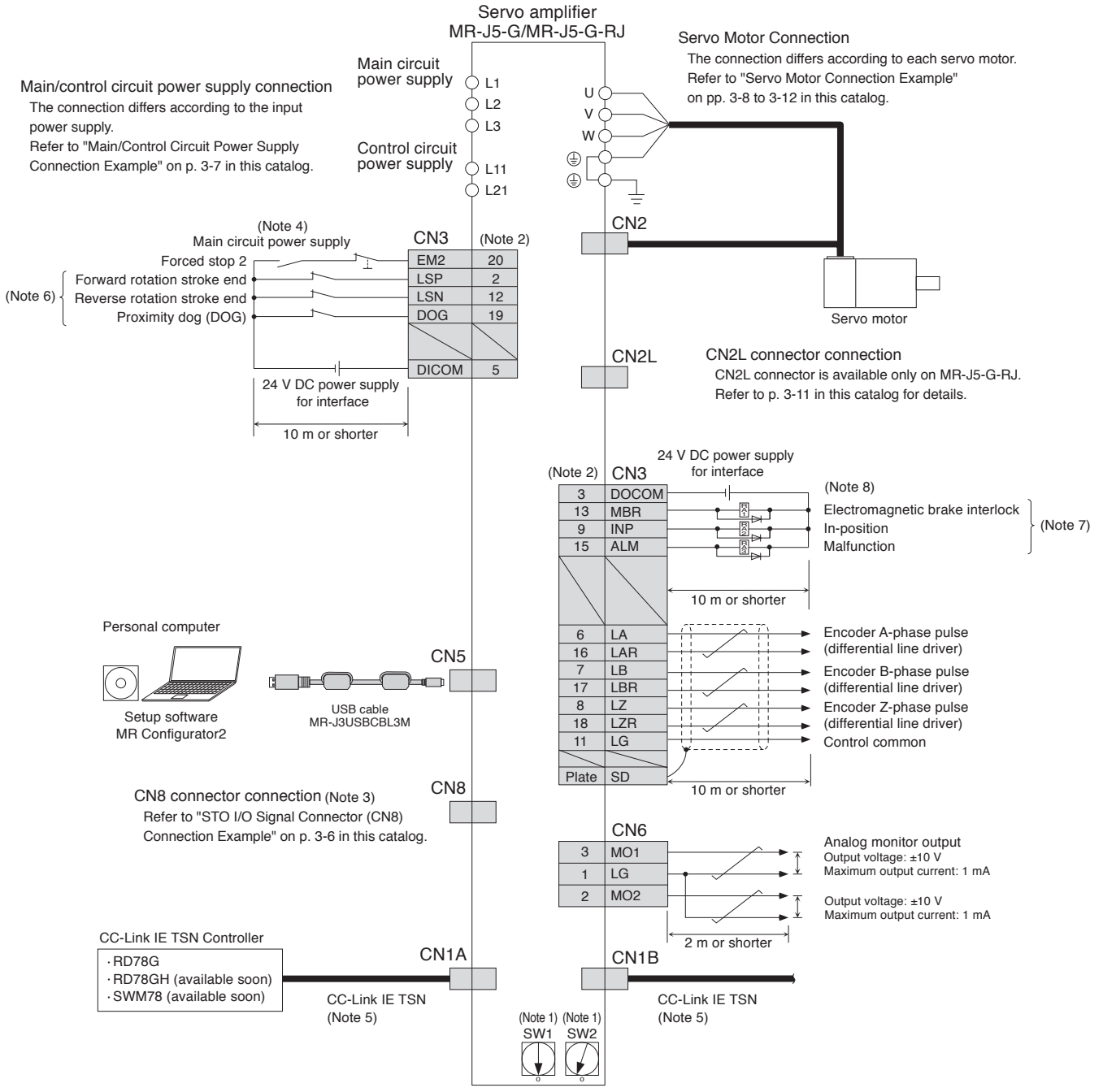

Notes:
1. Up to 254 stations are set with a combination of the rotary switches (SW1 and SW2). Note that the number of the connectable stations depends on the controller specifications.
2. This is for sink wiring. Source wiring is also possible.
3. Attach a short-circuit connector supplied with the servo amplifier when the STO function is not used.
4. To prevent an unexpected restart of the servo amplifier, create a circuit to turn off EM2 (Forced stop 2) when the main circuit power is turned off.
5. When branching off CC-Link IE TSN (synchronous communication function) with a switching hub, use a switching hub (Class B) recommended by CC-Link Partner Association. When a switching hub (Class A) is used, there are restrictions on the topologies to be used. Refer to "MELSEC iQ-R Motion Module User's Manual" for details.
6. Devices for these pins can be changed with [Pr. PD03], [Pr. PD04], and [Pr. PD05].
7. Devices for these pins can be changed with [Pr. PD07], [Pr. PD08], and [Pr. PD09].
8. When using a linear servo motor or direct drive motor, use MBR (Electromagnetic brake interlock) for an external brake mechanism.

⚠ Be sure to read through User's Manual for the actual wiring and use. Use the equipment after you have a full knowledge of the equipment, safety information and instructions.

STO I/O Signal Connector (CN8) Connection Example

G A

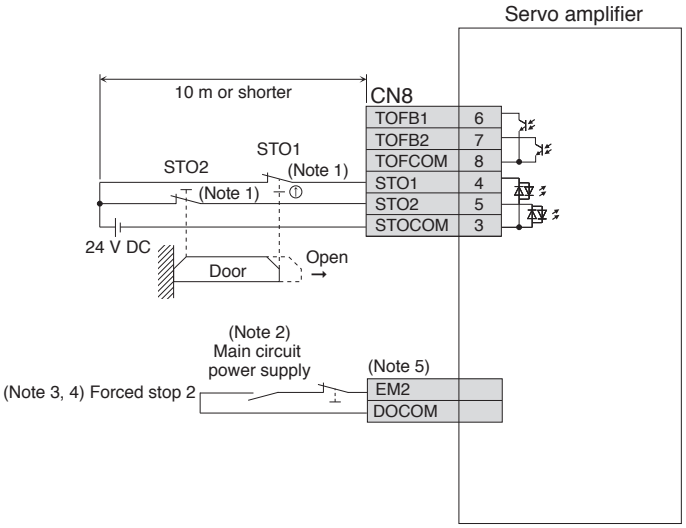

Notes: 1. When using the STO function, turn off STO1 and STO2 at the same time. Turn off STO1 and STO2 after the servo motor stops in servo-off state or after the servo motor stops with deceleration by turning off EM2 (Forced stop 2).
2. To prevent an unexpected restart of the servo amplifier, create a circuit to turn off EM2 (Forced stop 2) when the main circuit power is turned off.
3. If the controller does not have a forced stop function, install a forced stop 2 switch (normally closed contact).
4. Turn on EM2 (Forced stop 2) before starting the operation.
5. The connector and the pin numbers for each signal vary depending on the servo amplifier. Refer to the standard wiring diagram example for the relevant servo amplifier in this catalog for details.

⚠ Be sure to read through User's Manual for the actual wiring and use. Use the equipment after you have a full knowledge of the equipment, safety information and instructions.

Main/Control Circuit Power Supply Connection Example (Note 6)

G G-RJ A A-RJ

●For 3-phase 200 V AC and driving on/off of main circuit power supply with AC power supply

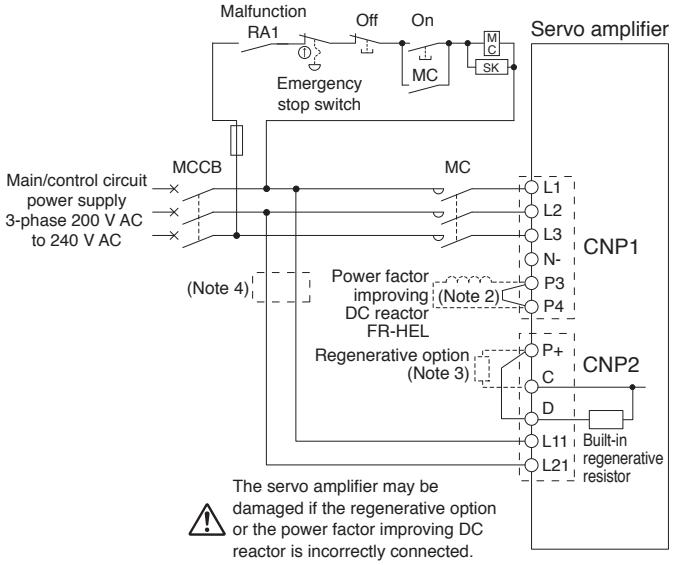

●For 3-phase 200 V AC and driving on/off of main circuit power supply with DC power supply

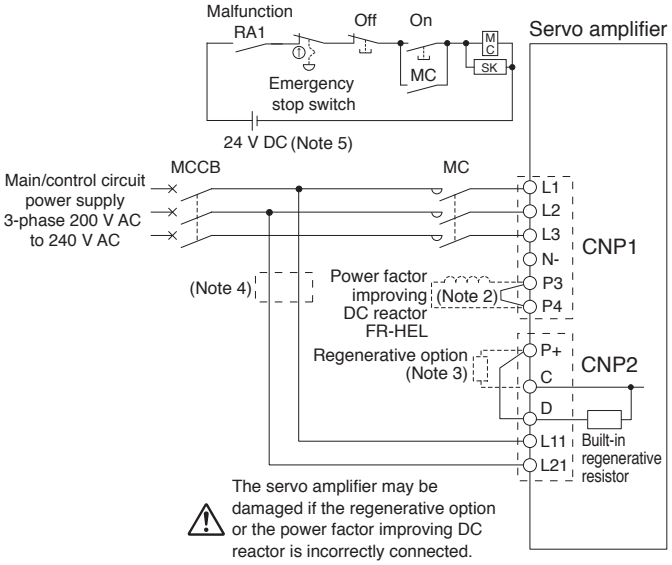

●For 1-phase 200 V AC and driving on/off of main circuit power supply with AC power supply

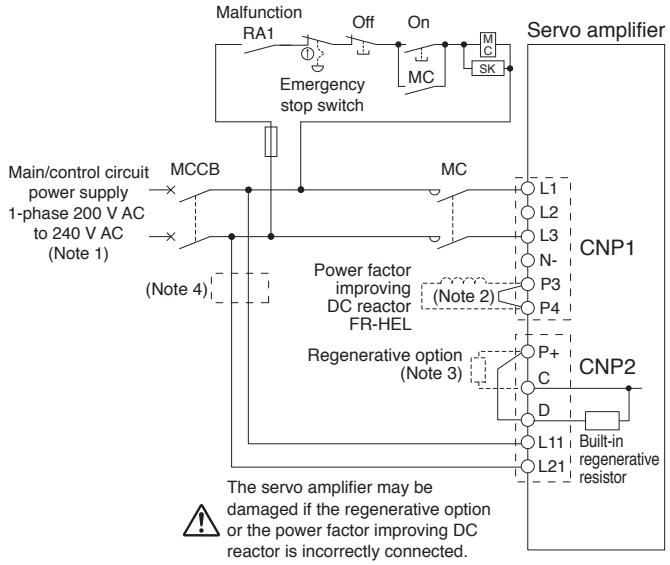

●For 1-phase 200 V AC and driving on/off of main circuit power supply with DC power supply

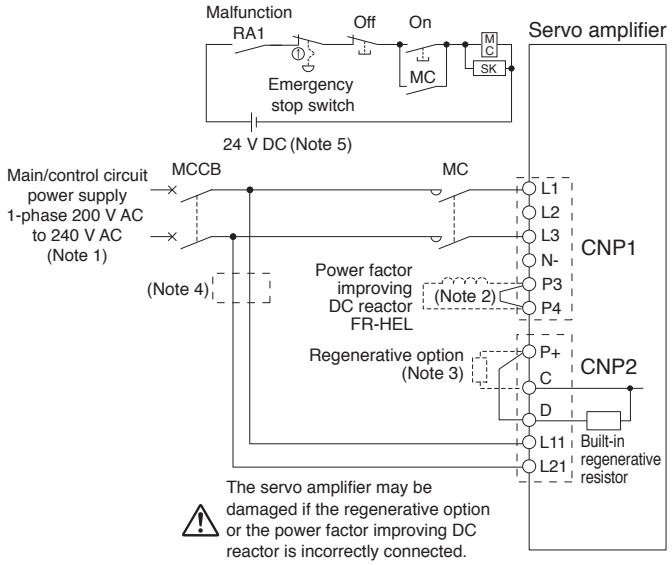

Notes: 1. For 1-phase 200 V AC to 240 V AC, connect the power supply to L1 and L3 terminals. Do not connect anything to L2.
2. Disconnect a short-circuit bar between P3 and P4 when using the power factor improving DC reactor or the simple converter unit.
3. Disconnect a short-circuit bar between P+ and D when connecting the regenerative option externally.
4. When wires used for L11 and L21 are thinner than those for L1, L2, and L3, use a molded-case circuit breaker or a fuse. Refer to "MR-J5 User's Manual" for details.
5. Do not use the 24 V DC interface power supply for the magnetic contactor. Provide a dedicated power supply to the magnetic contactor.
6. For a connection example of power supply circuit with DC input, refer to "MR-J5 User's Manual".

⚠ Be sure to read through User's Manual for the actual wiring and use. Use the equipment after you have a full knowledge of the equipment, safety information and instructions.

Servo Motor Connection Example (Rotary Servo Motor)

G G-RJ A A-RJ

●For HK-KT series

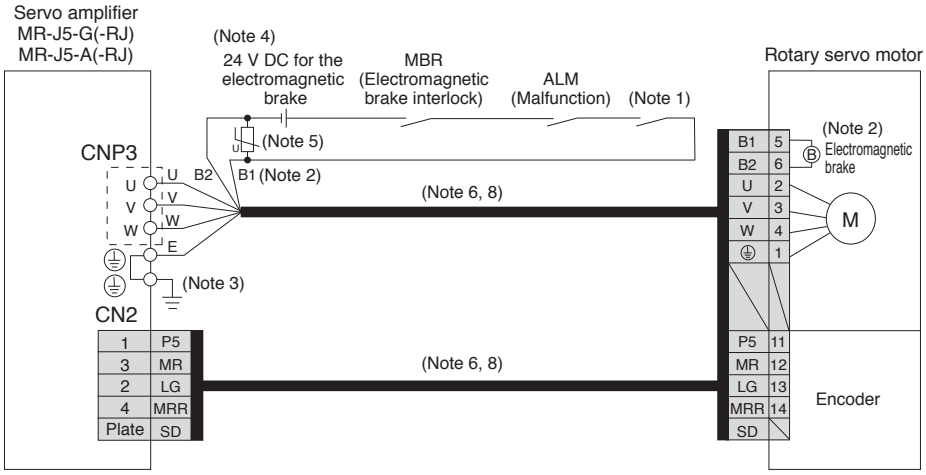

●For HK-ST series

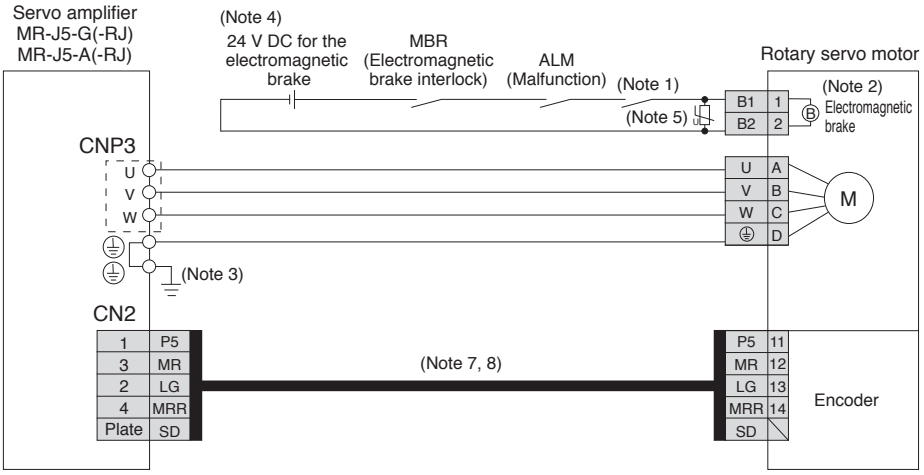

Notes: 1. Create the circuit in order to shut off by being interlocked with the emergency stop switch.
2. This is for the servo motors with an electromagnetic brake. The electromagnetic brake terminals (B1, B2) do not have polarity.
3. Connect the grounding wire to the cabinet protective earth (PE) terminal via the servo amplifier protective earth (PE) terminal for grounding.
4. Do not use the 24 V DC interface power supply for the electromagnetic brake. Provide a dedicated power supply to the electromagnetic brake.
5. Install a surge absorber between B1 and B2.
6. This is for using an option dual cable type. Single cable types are also available.
7. Encoder cables are available as an option.
8. Refer to "Rotary Servo Motor User's Manual" when fabricating the cables.

⚠ Be sure to read through User's Manual for the actual wiring and use. Use the equipment after you have a full knowledge of the equipment, safety information and instructions.

Servo Motor Connection Example (Linear Servo Motor)

G A

Linear Servo System with MR-J5-G/MR-J5-A

●For LM-H3/LM-F/LM-K2/LM-U2 series

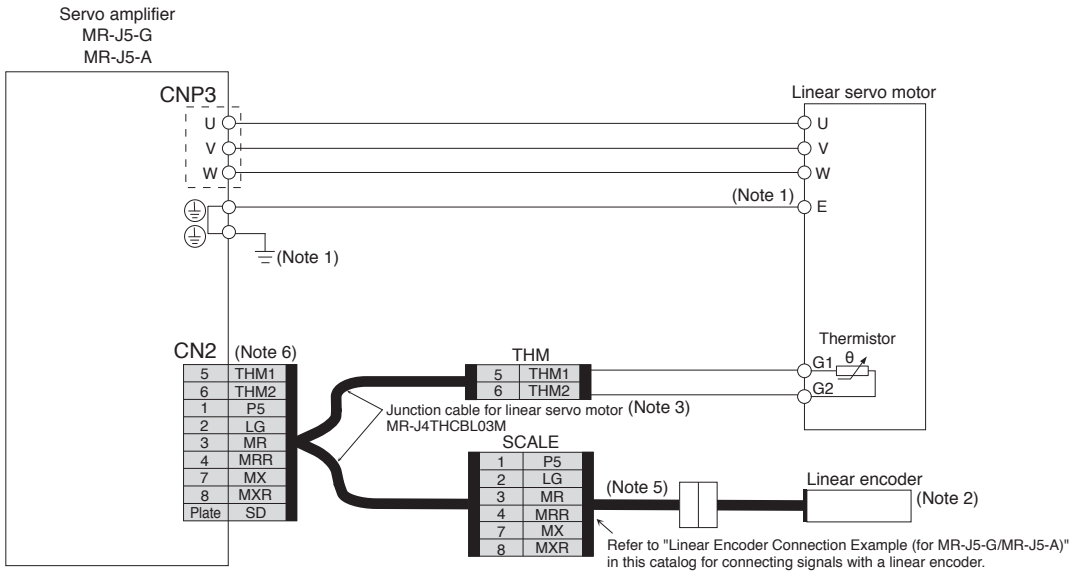

Linear Encoder Connection Example (for MR-J5-G/MR-J5-A)

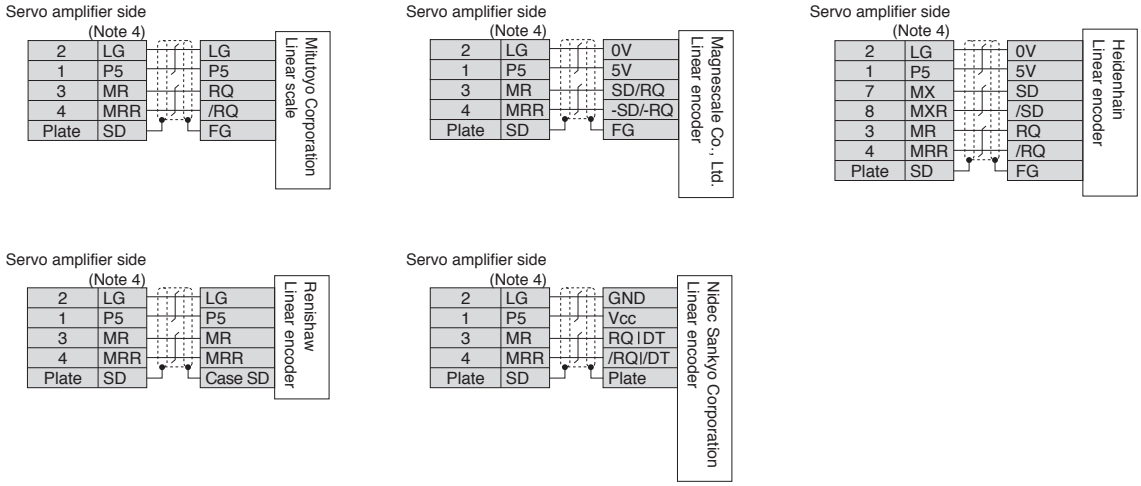

Notes: 1. Connect the grounding wire to the cabinet protective earth (PE) terminal via the servo amplifier protective earth (PE) terminal for grounding.
2. For linear encoders, refer to "List of Linear Encoders" in this catalog.
3. MR-J4THCBL03M junction cable for linear servo motor is compatible with both two-wire and four-wire type linear encoders.
4. For the number of the wire pairs for LG and P5, refer to "MR-J5 Partner's Encoder User's Manual."
5. Necessary cables vary depending on the linear encoder. Refer to "MR-J5 Partner's Encoder User's Manual" for details.
6. When using a linear servo motor with MR-J5-G/MR-J5-A, connect MR-J4THCBL03M junction cable or a junction cable fabricated using MR-J3THMCN2 connector set to CN2 connector.

⚠ Be sure to read through User's Manual for the actual wiring and use. Use the equipment after you have a full knowledge of the equipment, safety information and instructions.

Servo Motor Connection Example (Linear Servo Motor)

G-RJ A-RJ

Linear Servo System with MR-J5-G-RJ/MR-J5-A-RJ (LM-H3, LM-F, LM-K2, LM-U2)

●Connecting a serial linear encoder

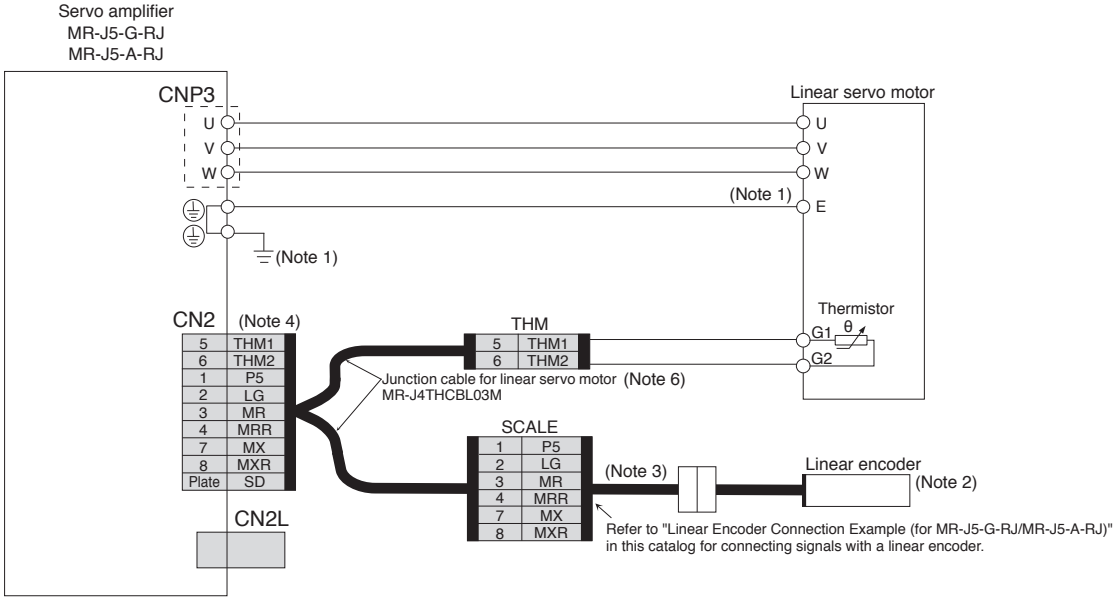

●Connecting an A/B/Z-phase differential output linear encoder

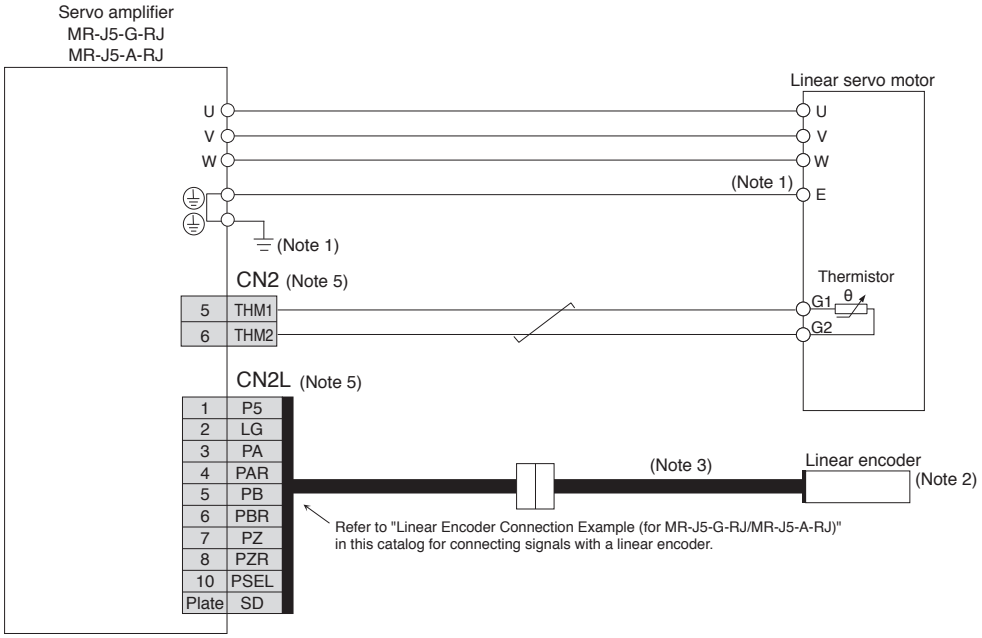

Notes: 1. Connect the grounding wire to the cabinet protective earth (PE) terminal via the servo amplifier protective earth (PE) terminal for grounding.
2. For linear encoders, refer to "List of Linear Encoders" in this catalog.
3. Necessary cables vary depending on the linear encoder. Refer to "MR-J5 Partner's Encoder User's Manual" for details.
4. When configuring a linear servo system with MR-J5-G-RJ/MR-J5-A-RJ servo amplifier and a serial linear encoder, connect MR-J4THCBL03M junction cable or a junction cable fabricated using MR-J3THMCN2 connector set to CN2 connector.
5. When configuring a linear servo system with MR-J5-G-RJ/MR-J5-A-RJ and an A/B/Z-phase differential output type linear encoder, connect a thermistor to CN2 connector and the linear encoder to CN2L connector. Do not use MR-J4THCBL03M junction cable or a junction cable fabricated using MR-J3THMCN2 connector set.
6. MR-J4THCBL03M junction cable for linear servo motor is compatible with both two-wire and four-wire type linear encoders.

⚠ Be sure to read through User's Manual for the actual wiring and use. Use the equipment after you have a full knowledge of the equipment, safety information and instructions.

Linear Encoder Connection Example (for MR-J5-G-RJ/MR-J5-A-RJ)

G-RJ A-RJ

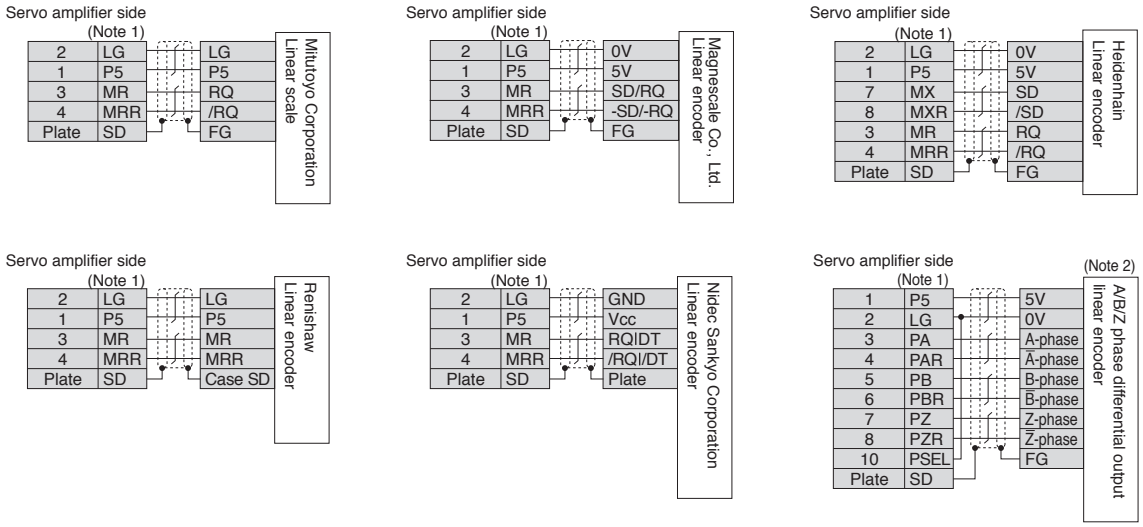

Notes: 1. For the number of the wire pairs for LG and P5, refer to "MR-J5 Partner's Encoder User's Manual."
2. If the encoder's current consumption exceeds 350 mA, supply power from an external source.

> ⚠ Be sure to read through User's Manual for the actual wiring and use. Use the equipment after you have a full knowledge of the equipment, safety information and instructions.

Encoder Connection Specifications

G G-RJ WG A A-RJ

Refer to the following table for the encoder communication method compatible with linear servo system and for the servo amplifier connector to which a load-side encoder should be connected.

Operation mode	External encoder communication method	Connector to be connected with the external encoder					
		MR-J5-G	MR-J5-G-RJ	MR-J5-A	MR-J5-A-RJ	MR-J5W2-G	MR-J5W3-G
Linear servo system (Note 3)	Two-wire type	CN2 (Note 1)	CN2 (Note 1)	CN2 (Note 1)	CN2 (Note 1)	CN2A (Note 1) CN2B (Note 1)	CN2A (Note 1) CN2B (Note 1) CN2C (Note 1)
	Four-wire type						
	A/B/Z-phase differential output method		CN2L (Note 2)		CN2L (Note 2)		

Notes: 1. MR-J4THCBL03M junction cable is required.
2. Connect a thermistor to CN2 connector.
3. Refer to "Combinations of Linear Servo Motors and Servo Amplifiers" in this catalog for servo amplifiers that are compatible with linear servo motors.

Servo Motor Connection Example (Direct Drive Motor)

G G-RJ A A-RJ

●For TM-RG2M/TM-RU2M/TM-RFM series (incremental system)

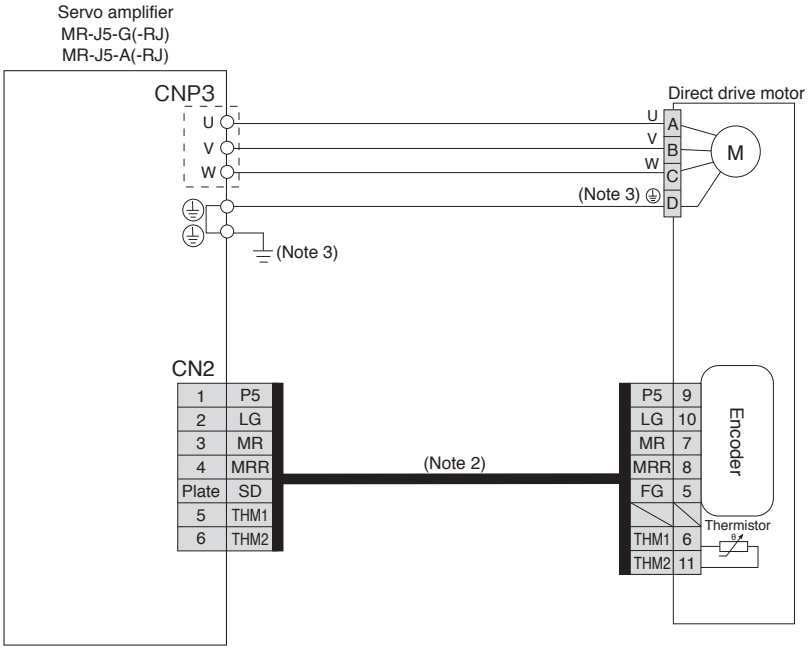

●For TM-RG2M/TM-RU2M/TM-RFM series (absolute position detection system)

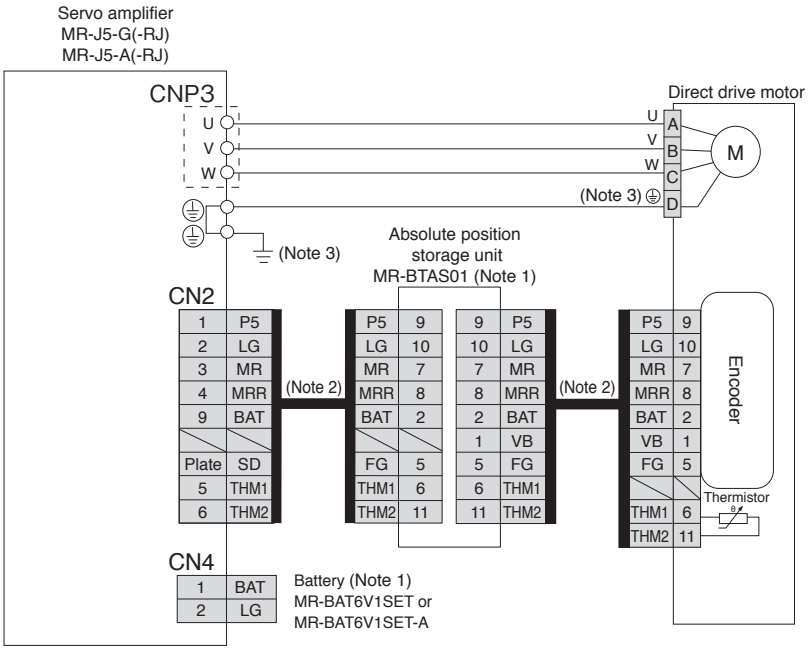

Notes: 1. An MR-BTAS01 absolute position storage unit, and MR-BAT6V1SET or MR-BAT6V1SET-A battery (sold as options) are required for absolute position detection system. Refer to "MR-J5 User's Manual" and "Direct Drive Motor User's Manual" for details of absolute position detection system.
2. Fabricate this encoder cable. Refer to "Direct Drive Motor User's Manual" for fabricating the encoder cable.
3. Connect the grounding wire to the cabinet protective earth (PE) terminal via the servo amplifier protective earth (PE) terminal for grounding.

⚠ Be sure to read through User's Manual for the actual wiring and use. Use the equipment after you have a full knowledge of the equipment, safety information and instructions.

MR-J5-G/MR-J5-G-RJ Dimensions

G G-RJ

●MR-J5-10G, MR-J5-10G-RJ

●MR-J5-20G, MR-J5-20G-RJ

●MR-J5-40G, MR-J5-40G-RJ

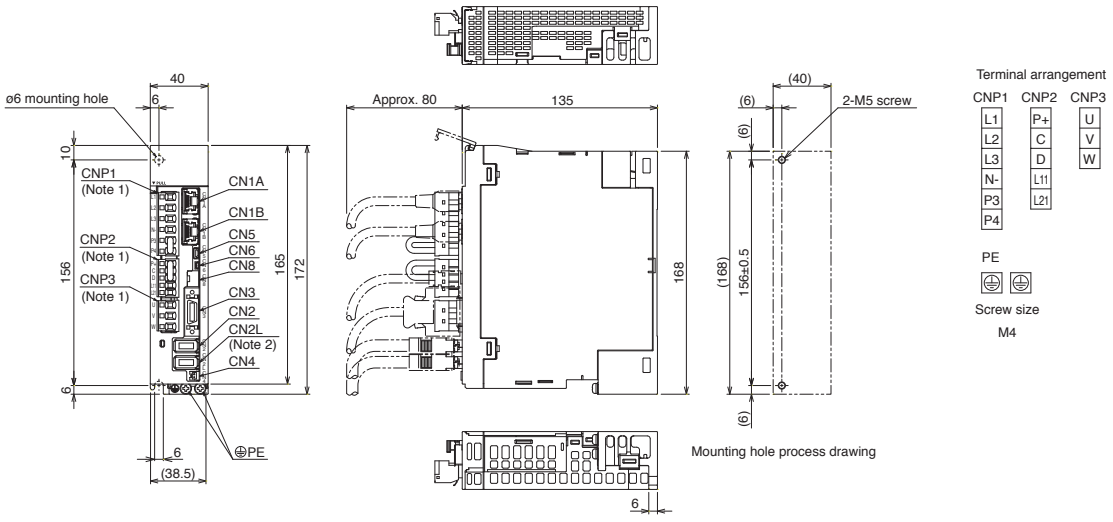

[Unit: mm]

●MR-J5-60G, MR-J5-60G-RJ

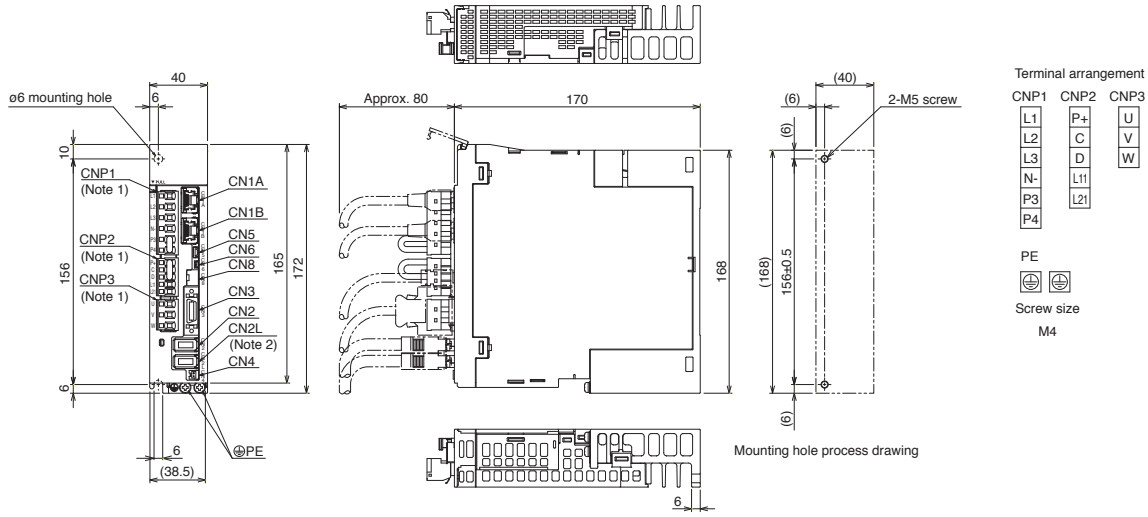

[Unit: mm]

Notes: 1. CNP1, CNP2 and CNP3 connectors are supplied with the servo amplifier.
2. CN2L connector is not available for MR-J5-G servo amplifiers.

MR-J5-G/MR-J5-G-RJ Dimensions

G G-RJ

●MR-J5-70G, MR-J5-70G-RJ

●MR-J5-100G, MR-J5-100G-RJ

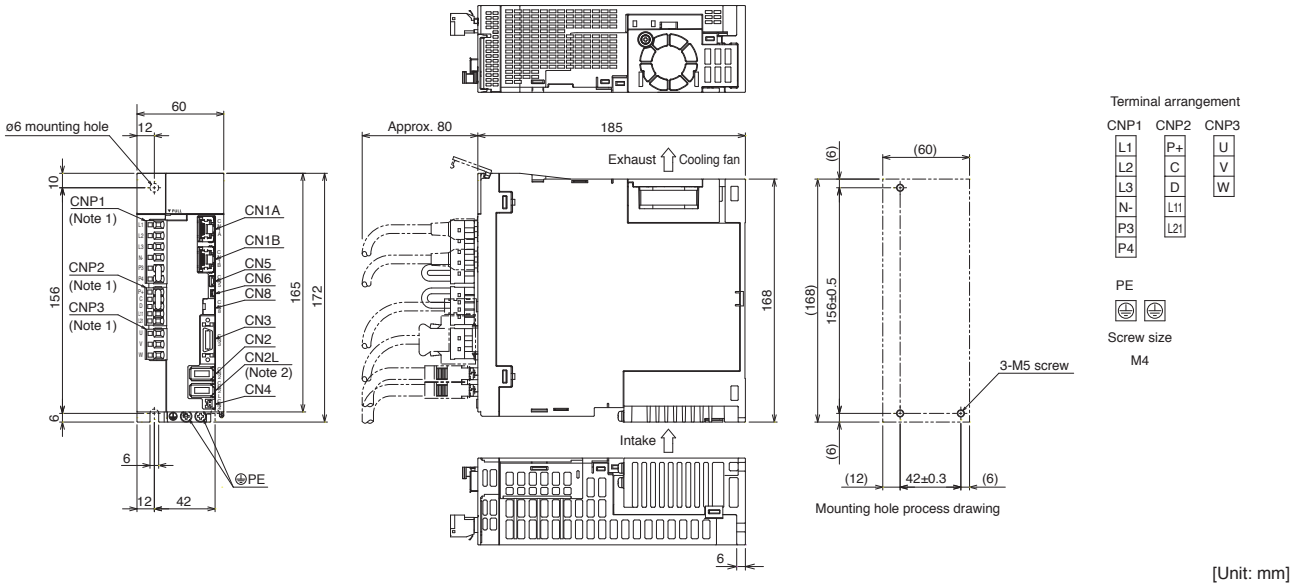

[Unit: mm]

●MR-J5-200G, MR-J5-200G-RJ

●MR-J5-350G, MR-J5-350G-RJ

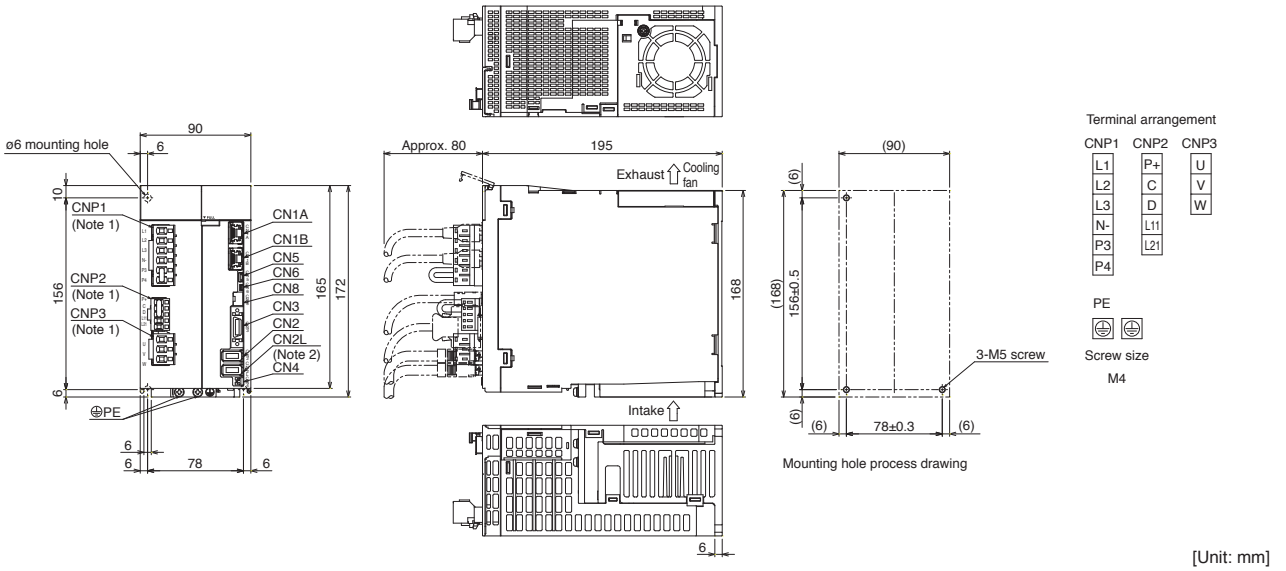

[Unit: mm]

Notes: 1. CNP1, CNP2 and CNP3 connectors are supplied with the servo amplifier.
2. CN2L connector is not available for MR-J5-G servo amplifiers.

MR-J5W2-G/MR-J5W3-G Connections with Peripheral Equipment (Note 1)

WG

Peripheral equipment is connected to MR-J5W2-G/MR-J5W3-G as described below. Connectors, cables, options, and other necessary equipment are available so that users can set up the servo amplifier easily and start using it right away.

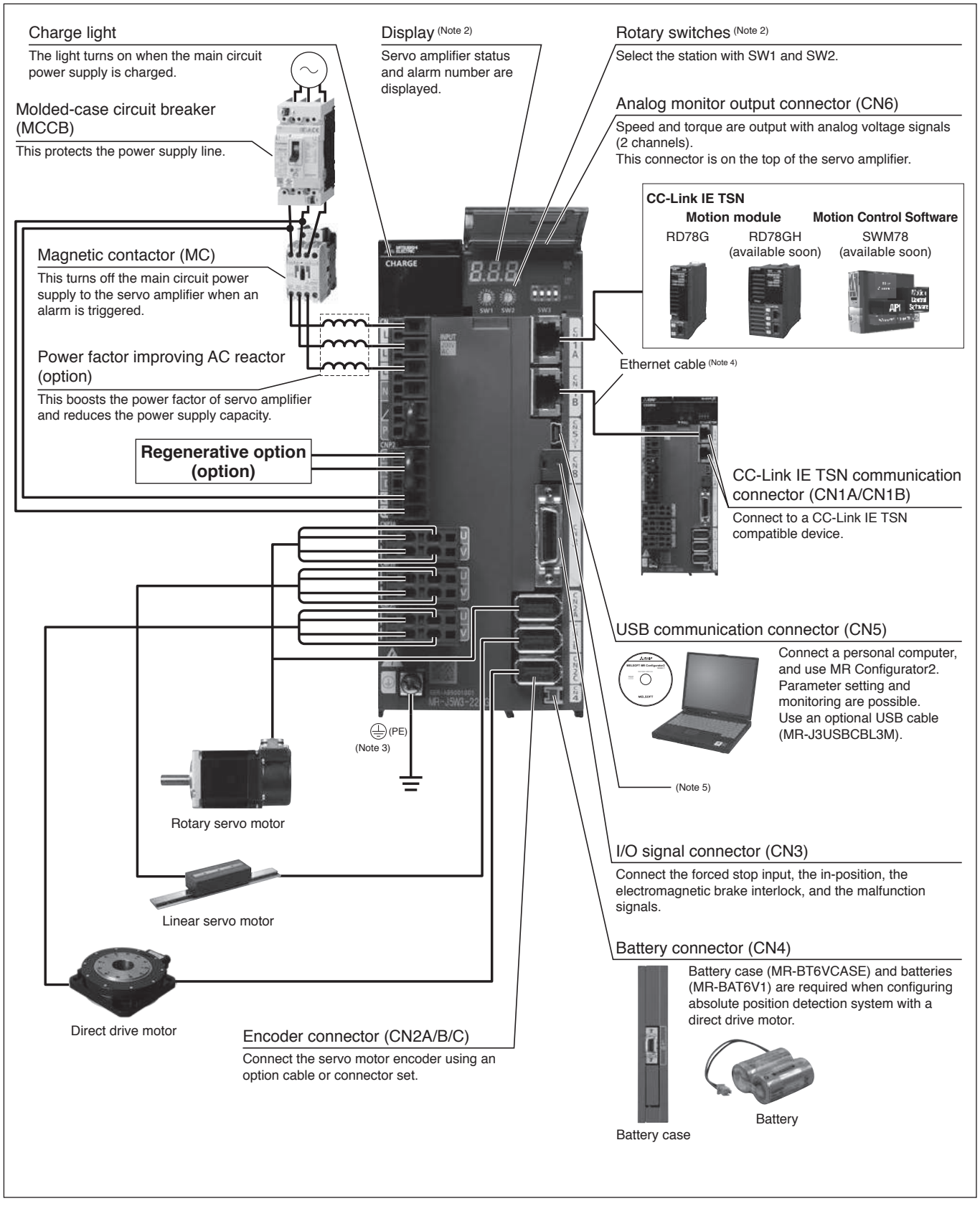

Notes: 1. The connection with the peripheral equipment is an example for MR-J5W3-222G. CNP3C and CN2C connectors are not available on MR-J5W2-G. Refer to "MR-J5 User's Manual" for the actual connections of each multi-axis servo amplifier.
2. This picture shows when the display cover is open.
3. Connect the grounding terminal of the servo motor to ⏚ of CNP3A, CNP3B, and CNP3C. Connect the protective earth (PE) terminal (⏚) located on the lower front of the servo amplifier to the cabinet protective earth (PE).
4. For specifications of the Ethernet cable, refer to "Ethernet Cable Specifications" on p. 7-26 in this catalog.
5. Attach a short-circuit connector supplied with the servo amplifier.

MR-J5W2-G (2-axis, CC-Link IE TSN) Specifications

WG

Servo amplifier model MR-J5W2-			22G	44G	77G	1010G
Output	Voltage		3-phase 0 V AC to 240 V AC			
	Rated current (each axis) [A]		1.8	2.8	5.8	6.0
Main circuit power supply input	Voltage/ frequency (Note 1)	AC input	3-phase or 1-phase 200 V AC to 240 V AC, 50 Hz/60 Hz			3-phase 200 V AC to 240 V AC, 50 Hz/60 Hz
		DC input (Note 8)	283 V DC to 340 V DC			
	Rated current (Note 6) [A]		2.9	5.2	7.5	9.8
	Permissible voltage fluctuation	AC input	3-phase or 1-phase 170 V AC to 264 V AC			3-phase 170 V AC to 264 V AC
		DC input (Note 8)	241 V DC to 374 V DC			
	Permissible frequency fluctuation		±5 % maximum			
Control circuit power supply input	Voltage/ frequency	AC input	1-phase 200 V AC to 240 V AC, 50 Hz/60 Hz			
		DC input (Note 8)	283 V DC to 340 V DC			
	Rated current [A]		0.4			
	Permissible voltage fluctuation	AC input	1-phase 170 V AC to 264 V AC			
		DC input (Note 8)	241 V DC to 374 V DC			
	Permissible frequency fluctuation		±5 % maximum			
	Power consumption [W]		55			
Interface power supply			24 V DC ± 10 % (required current capacity: 0.35 A (including CN8 connector signals))			
Control method			Sine-wave PWM control/current control method			
Permissible regenerative power of the built-in regenerative resistor (Note 2, 3) [W]			20		100	
Dynamic brake (Note 4)			Built-in			
CC-Link IE TSN	Communication cycle (Note 5)		62.5 µs, 125 µs, 250 µs, 500 µs, 1 ms, 2 ms, 4 ms			
	Authentication class		Class B			
Communication function	USB		Connect a personal computer (MR Configurator2 compatible)			
Encoder output pulse			Compatible (A/B-phase pulse) (Note 9)			
Analog monitor			2 channels			
Servo functions			Advanced vibration suppression control II, adaptive filter II, robust filter, quick tuning, auto tuning, one-touch tuning, tough drive function, drive recorder function, machine diagnosis function (including failure prediction), power monitoring function, lost motion compensation function			
Protective functions			Overcurrent shut-off, regenerative overvoltage shut-off, overload shut-off (electronic thermal), servo motor overheat protection, encoder error protection, regenerative error protection, undervoltage protection, instantaneous power failure protection, overspeed protection, error excessive protection, magnetic pole detection protection, linear servo control fault protection			
Structure (IP rating)			Natural cooling, open (IP20)	Force cooling, open (IP20)		
Close mounting			Possible (Note 7)			
Mass [kg]			1.5		1.9	

Notes: 1. Rated output and speed of a rotary servo motor and a direct drive motor; and continuous thrust and maximum speed of a linear servo motor are applicable when the servo amplifier is operated within the specified power supply voltage and frequency.
2. Select the most suitable regenerative option for your system with our drive system sizing software Motorizer.
3. Refer to "Regenerative Option" in this catalog for the permissible regenerative power [W] when a regenerative option is used.
4. When using the dynamic brake, refer to "MR-J5 User's Manual" for the permissible load to motor inertia ratio and the permissible load to mass ratio.
5. The command communication cycle depends on the controller specifications and the number of axes connected.
6. This value is applicable when a 3-phase power supply is used.
7. When the servo amplifiers are closely mounted, keep the ambient temperature within 0 °C to 45 °C, or use the servo amplifiers at 75 % or less of the effective load ratio.
8. For a connection example of power supply circuit with DC input, refer to "MR-J5 User's Manual".
9. A/B-phase pulses are not output at a communication cycle of 62.5 µs.

MR-J5W3-G (3-axis, CC-Link IE TSN) Specifications

WG

Servo amplifier model MR-J5W3-			222G	444G
Output	Voltage		3-phase 0 V AC to 240 V AC	
	Rated current (each axis) [A]		1.8	2.8
Main circuit power supply input	Voltage/ frequency (Note 1)	AC input	3-phase or 1-phase 200 V AC to 240 V AC, 50 Hz/60 Hz	
		DC input (Note 8)	283 V DC to 340 V DC	
	Rated current (Note 6) [A]		4.3	7.8
	Permissible voltage fluctuation	AC input	3-phase or 1-phase 170 V AC to 264 V AC	
		DC input (Note 8)	241 V DC to 374 V DC	
	Permissible frequency fluctuation		±5 % maximum	
Control circuit power supply input	Voltage/ frequency	AC input	1-phase 200 V AC to 240 V AC, 50 Hz/60 Hz	
		DC input (Note 8)	283 V DC to 340 V DC	
	Rated current [A]		0.4	
	Permissible voltage fluctuation	AC input	1-phase 170 V AC to 264 V AC	
		DC input (Note 8)	241 V DC to 374 V DC	
	Permissible frequency fluctuation		±5 % maximum	
	Power consumption [W]		55	
Interface power supply			24 V DC ± 10 % (required current capacity: 0.45 A (including CN8 connector signals))	
Control method			Sine-wave PWM control/current control method	
Permissible regenerative power of the built-in regenerative resistor (Note 2, 3) [W]			30	
Dynamic brake (Note 4)			Built-in	
CC-Link IE TSN	Communication cycle (Note 5)		125 µs, 250 µs, 500 µs, 1 ms, 2 ms, 4 ms	
	Authentication class		Class B	
Communication function	USB		Connect a personal computer (MR Configurator2 compatible)	
Encoder output pulse			Compatible only with A-axis and B-axis (A/B-phase pulse) (Note 9)	
Analog monitor			2 channels	
Servo functions			Advanced vibration suppression control II, adaptive filter II, robust filter, quick tuning, auto tuning, one-touch tuning, tough drive function, drive recorder function, machine diagnosis function (including failure prediction), power monitoring function, lost motion compensation function	
Protective functions			Overcurrent shut-off, regenerative overvoltage shut-off, overload shut-off (electronic thermal), servo motor overheat protection, encoder error protection, regenerative error protection, undervoltage protection, instantaneous power failure protection, overspeed protection, error excessive protection, magnetic pole detection protection, linear servo control fault protection	
Structure (IP rating)			Force cooling, open (IP20)	
Close mounting			Possible (Note 7)	
Mass [kg]			1.8	

Notes: 1. Rated output and speed of a rotary servo motor and a direct drive motor; and continuous thrust and maximum speed of a linear servo motor are applicable when the servo amplifier is operated within the specified power supply voltage and frequency.
2. Select the most suitable regenerative option for your system with our drive system sizing software Motorizer.
3. Refer to "Regenerative Option" in this catalog for the permissible regenerative power [W] when a regenerative option is used.
4. When using the dynamic brake, refer to "MR-J5 User's Manual" for the permissible load to motor inertia ratio and the permissible load to mass ratio.
5. The command communication cycle depends on the controller specifications and the number of axes connected.
6. This value is applicable when a 3-phase power supply is used.
7. When the servo amplifiers are closely mounted, keep the ambient temperature within 0 °C to 45 °C, or use the servo amplifiers at 75 % or less of the effective load ratio.
8. For a connection example of power supply circuit with DC input, refer to "MR-J5 User's Manual".
9. A/B-phase pulses are not output at a communication cycle of 125 µs.

MR-J5W2-G Standard Wiring Diagram Example

WG

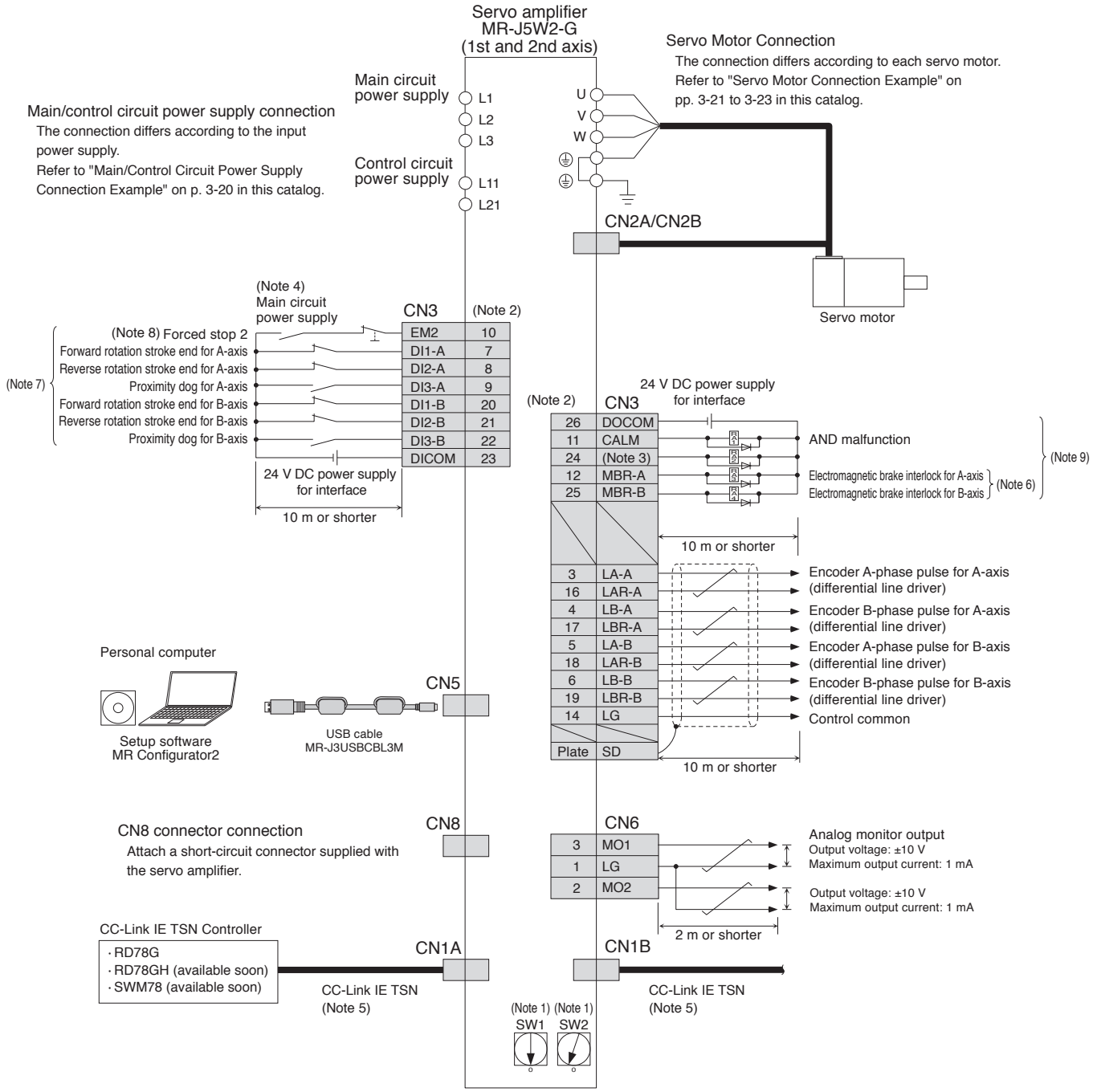

Notes:
1. Up to 254 stations are set with a combination of the rotary switches (SW1 and SW2). Note that the number of the connectable stations depends on the controller specifications.
2. This is for sink wiring. Source wiring is also possible.
3. CINP (AND in-position) is assigned to this pin as default. A device for this pin can be changed with [Pr. PD08].
4. To prevent an unexpected restart of the servo amplifier, create a circuit to turn off EM2 (Forced stop 2) when the main circuit power is turned off.
5. When branching off CC-Link IE TSN (synchronous communication function) with a switching hub, use a switching hub (Class B) recommended by CC-Link Partner Association. When a switching hub (Class A) is used, there are restrictions on the topologies to be used. Refer to "MELSEC iQ-R Motion Module User's Manual" for details.
6. When using a linear servo motor or direct drive motor, use MBR (Electromagnetic brake interlock) for an external brake mechanism.
7. Devices can be assigned for DI1-A/B, DI2-A/B, and DI3-A/B with controller setting. Refer to User's Manuals of the controller for details on setting.
8. The forced stop signal is issued for two axes of the servo amplifier. For overall system, apply the emergency stop on the controller side.
9. Devices for these pins can be changed with [Pr. PD07] and [Pr. PD09].

⚠ Be sure to read through User's Manual for the actual wiring and use. Use the equipment after you have a full knowledge of the equipment, safety information and instructions.

MR-J5W3-G Standard Wiring Diagram Example

WG

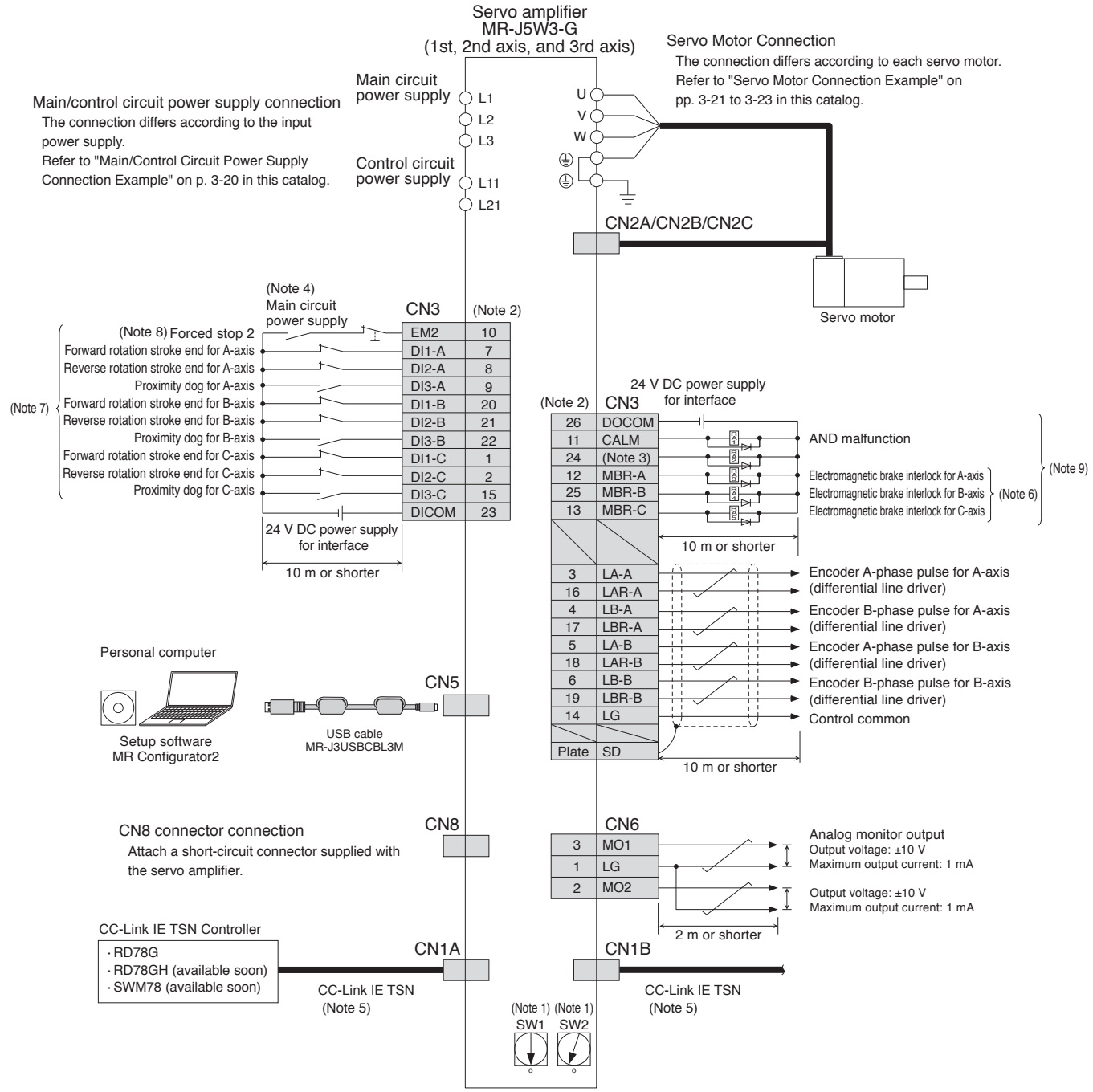

Notes:
1. Up to 254 stations are set with a combination of the rotary switches (SW1 and SW2). Note that the number of the connectable stations depends on the controller specifications.
2. This is for sink wiring. Source wiring is also possible.
3. CINP (AND in-position) is assigned to this pin as default. A device for this pin can be changed with [Pr. PD08].
4. To prevent an unexpected restart of the servo amplifier, create a circuit to turn off EM2 (Forced stop 2) when the main circuit power is turned off.
5. When branching off CC-Link IE TSN (synchronous communication function) with a switching hub, use a switching hub (Class B) recommended by CC-Link Partner Association. When a switching hub (Class A) is used, there are restrictions on the topologies to be used. Refer to "MELSEC iQ-R Motion Module User's Manual" for details.
6. When using a linear servo motor or direct drive motor, use MBR (Electromagnetic brake interlock) for an external brake mechanism.
7. Devices can be assigned for DI1-A/B/C, DI2-A/B/C, and DI3-A/B/C with controller setting. Refer to User's Manuals of the controller for details on setting.
8. The forced stop signal is issued for three axes of the servo amplifier. For overall system, apply the emergency stop on the controller side.
9. Devices for these pins can be changed with [Pr. PD07] and [Pr. PD09].

⚠ Be sure to read through User's Manual for the actual wiring and use. Use the equipment after you have a full knowledge of the equipment, safety information and instructions.

Main/Control Circuit Power Supply Connection Example (Note 6)

WG

●For 3-phase 200 V AC and driving on/off of main circuit power supply with AC power supply

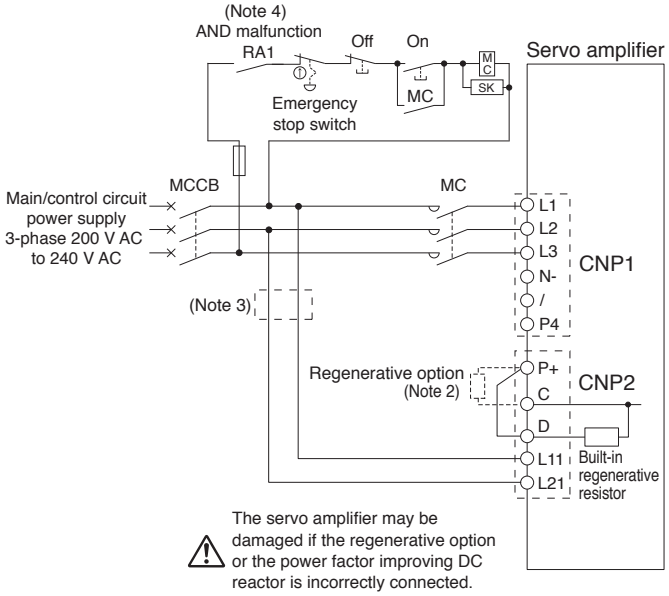

●For 3-phase 200 V AC and driving on/off of main circuit power supply with DC power supply

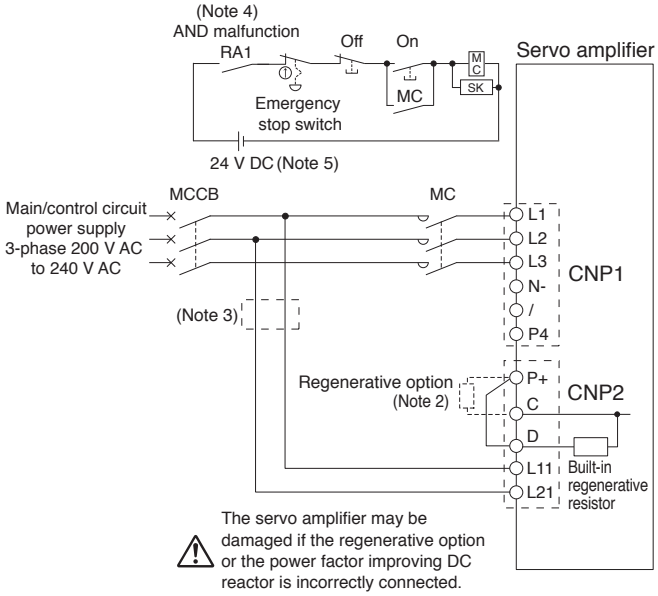

●For 1-phase 200 V AC and driving on/off of main circuit power supply with AC power supply

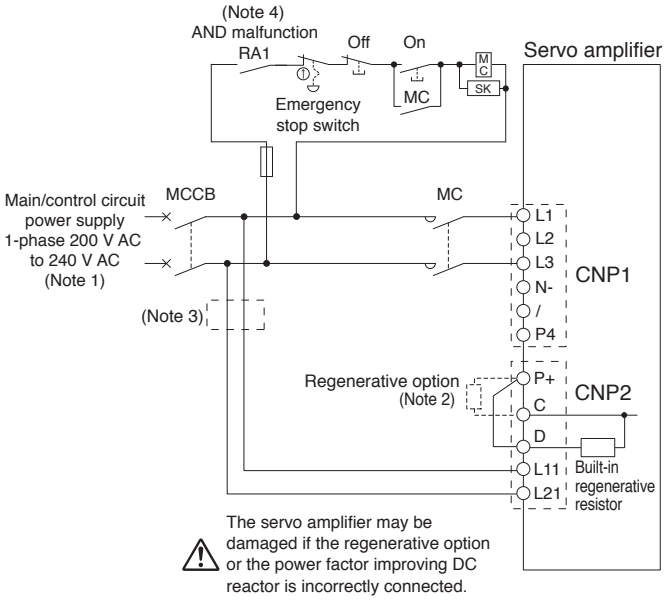

●For 1-phase 200 V AC and driving on/off of main circuit power supply with DC power supply

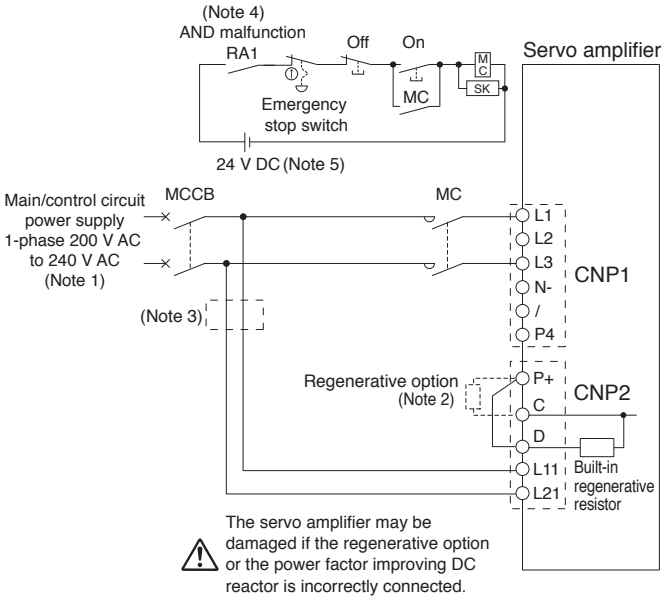

Notes: 1. For 1-phase 200 V AC to 240 V AC, connect the power supply to L1 and L3 terminals. Do not connect anything to L2.
2. Disconnect a short-circuit bar between P+ and D when connecting the regenerative option externally.
3. When wires used for L11 and L21 are thinner than those for L1, L2, and L3, use a molded-case circuit breaker or a fuse. Refer to "MR-J5 User's Manual" for details.
4. Select either of the following functions for CALM (AND malfunction) with the controller.
   1) The contact opens when an alarm occurs on one of the axes.
   2) The contact opens when an alarm occurs on all axes.
5. Do not use the 24 V DC interface power supply for the magnetic contactor. Provide a dedicated power supply to the magnetic contactor.
6. For a connection example of power supply circuit with DC input, refer to "MR-J5 User's Manual".

⚠ Be sure to read through User's Manual for the actual wiring and use. Use the equipment after you have a full knowledge of the equipment, safety information and instructions.

Servo Motor Connection Example (Rotary Servo Motor)

●For HK-KT series

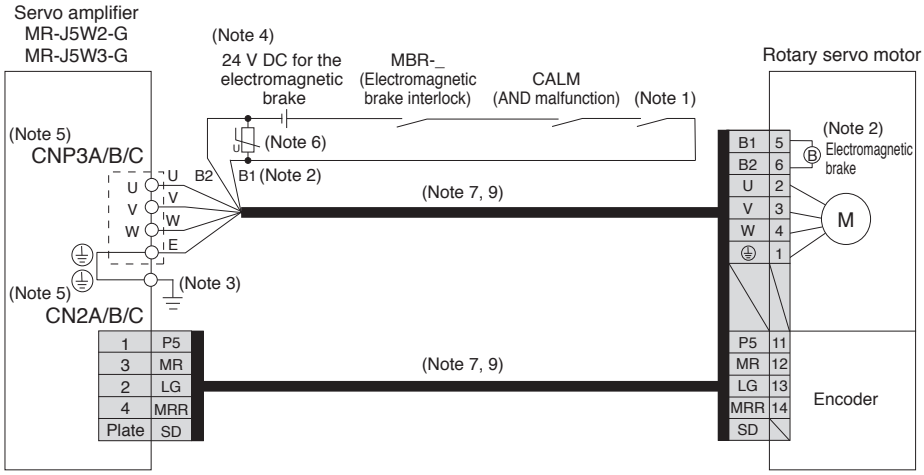

●For HK-ST series

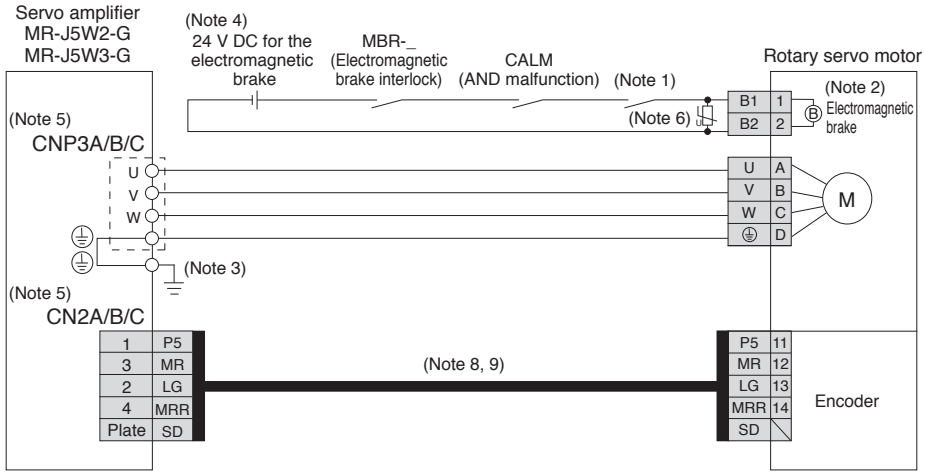

Notes: 1. Create the circuit in order to shut off by being interlocked with the emergency stop switch.
2. This is for the servo motors with an electromagnetic brake. The electromagnetic brake terminals (B1, B2) do not have polarity.
3. Connect the grounding terminal of the servo motor to ⏚ of CNP3A, CNP3B, and CNP3C. Connect the protective earth (PE) terminal (⏚) located on the lower front of the servo amplifier to the cabinet protective earth (PE).
4. Do not use the 24 V DC interface power supply for the electromagnetic brake. Provide a dedicated power supply to the electromagnetic brake.
5. CNP3C and CN2C connectors are available for MR-J5W3-G servo amplifiers.
6. Install a surge absorber between B1 and B2.
7. This is for using an option dual cable type. Single cable types are also available.
8. Encoder cables are available as an option.
9. Refer to "Rotary Servo Motor User's Manual" when fabricating the cables.

⚠ Be sure to read through User's Manual for the actual wiring and use. Use the equipment after you have a full knowledge of the equipment, safety information and instructions.

Servo Motor Connection Example (Linear Servo Motor)

WG

Linear Servo System with MR-J5W2-G/MR-J5W3-G

●For LM-H3/LM-K2/LM-U2 series

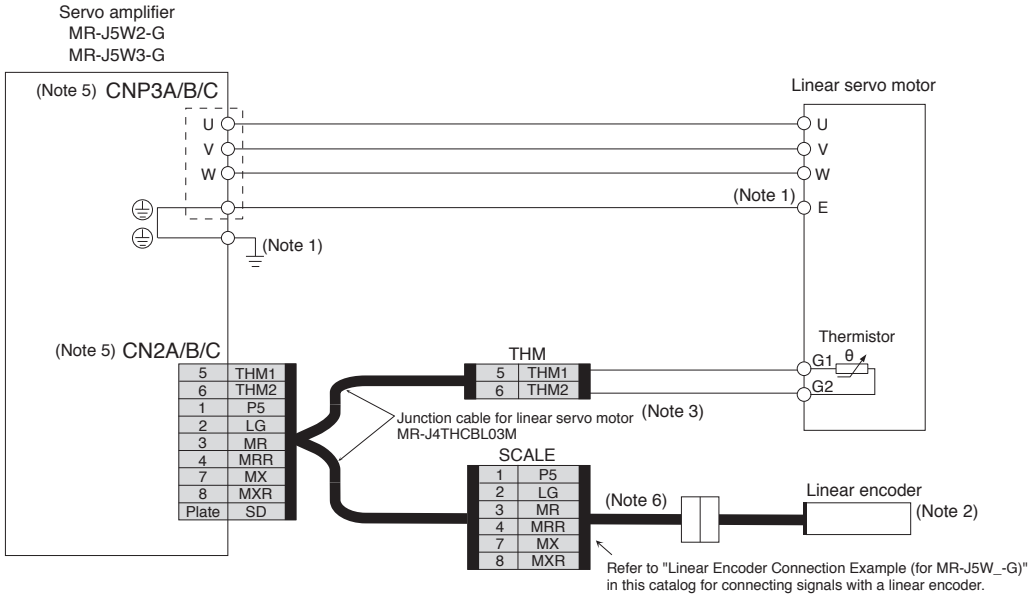

Linear Encoder Connection Example (for MR-J5W_-G)

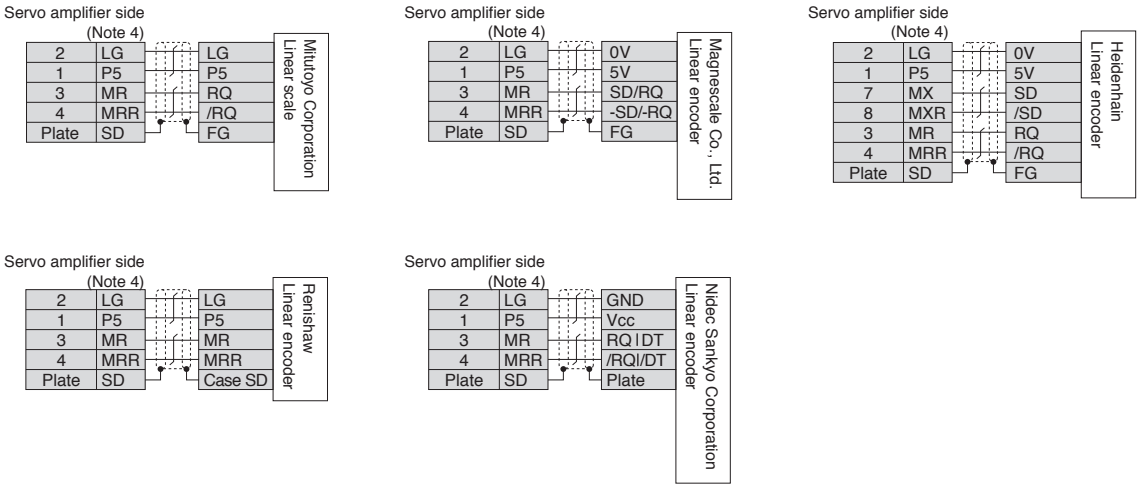

Notes: 1. Connect the grounding terminal of the servo motor to ⏚ of CNP3A, CNP3B, and CNP3C. Connect the protective earth (PE) terminal (⏚) located on the lower front of the servo amplifier to the cabinet protective earth (PE).
2. For linear encoders, refer to "List of Linear Encoders" in this catalog.
3. MR-J4THCBL03M junction cable for linear servo motor is compatible with both two-wire and four-wire type linear encoders.
4. For the number of the wire pairs for LG and P5, refer to "MR-J5 Partner's Encoder User's Manual."
5. CNP3C and CN2C connectors are available for MR-J5W3-G servo amplifiers.
6. Necessary cables vary depending on the linear encoder. Refer to "MR-J5 Partner's Encoder User's Manual" for details.

⚠ Be sure to read through User's Manual for the actual wiring and use. Use the equipment after you have a full knowledge of the equipment, safety information and instructions.

Servo Motor Connection Example (Direct Drive Motor)

●For TM-RG2M/TM-RU2M/TM-RFM series (incremental system)

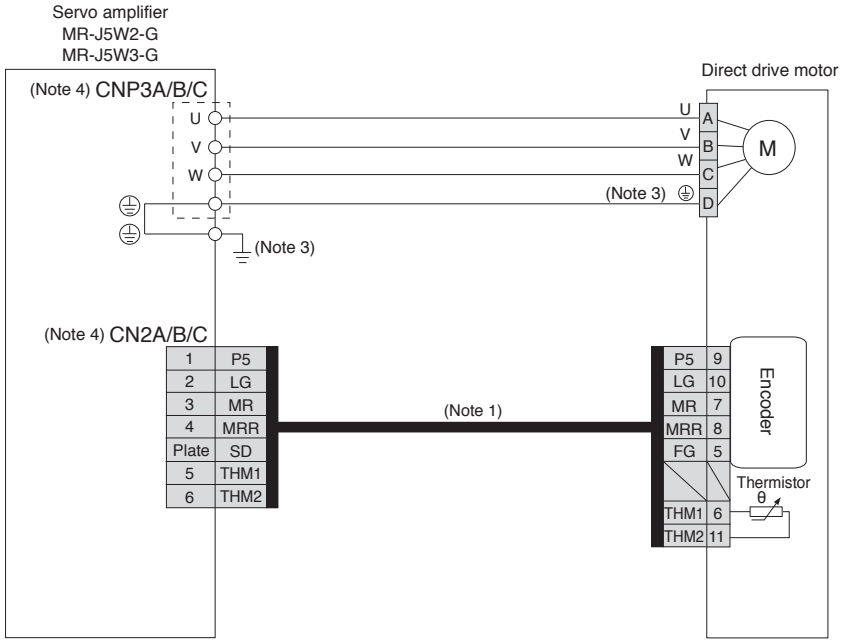

●For TM-RG2M/TM-RU2M/TM-RFM series (absolute position detection system)

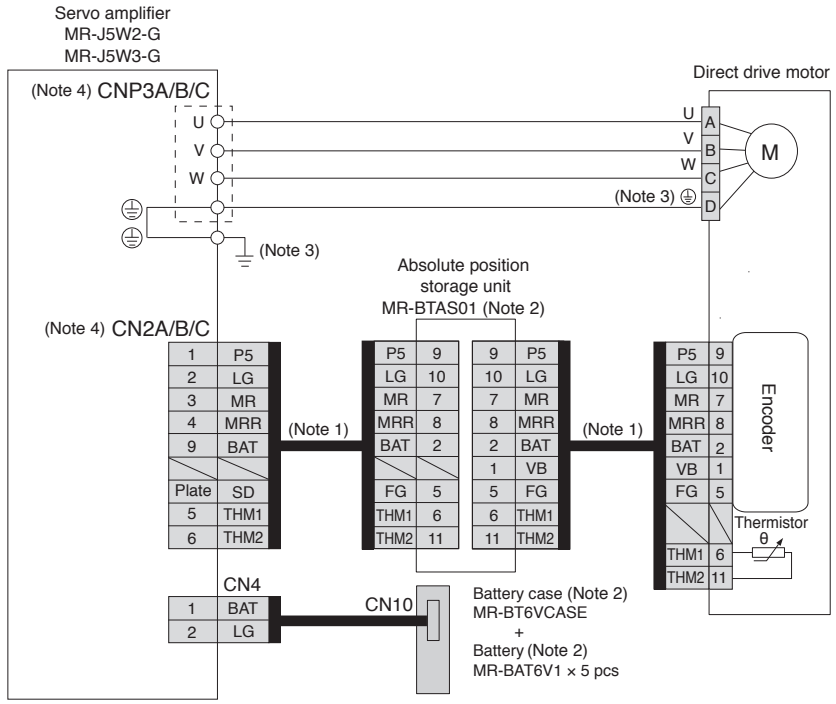

Notes: 1. Fabricate this encoder cable. Refer to "Direct Drive Motor User's Manual" for fabricating the encoder cable.
2. An MR-BTAS01 absolute position storage unit, MR-BT6VCASE battery case, and MR-BAT6V1 batteries (sold as options) are required for absolute position detection system. Refer to "MR-J5 User's Manual" and "Direct Drive Motor User's Manual" for details of absolute position detection system.
3. Connect the grounding terminal of the servo motor to ⏚ of CNP3A, CNP3B, and CNP3C. Connect the protective earth (PE) terminal (⏚) located on the lower front of the servo amplifier to the cabinet protective earth (PE).
4. CNP3C and CN2C connectors are available for MR-J5W3-G servo amplifiers.

⚠ Be sure to read through User's Manual for the actual wiring and use. Use the equipment after you have a full knowledge of the equipment, safety information and instructions.

MR-J5W2-G Dimensions

WG

●MR-J5W2-22G

●MR-J5W2-44G

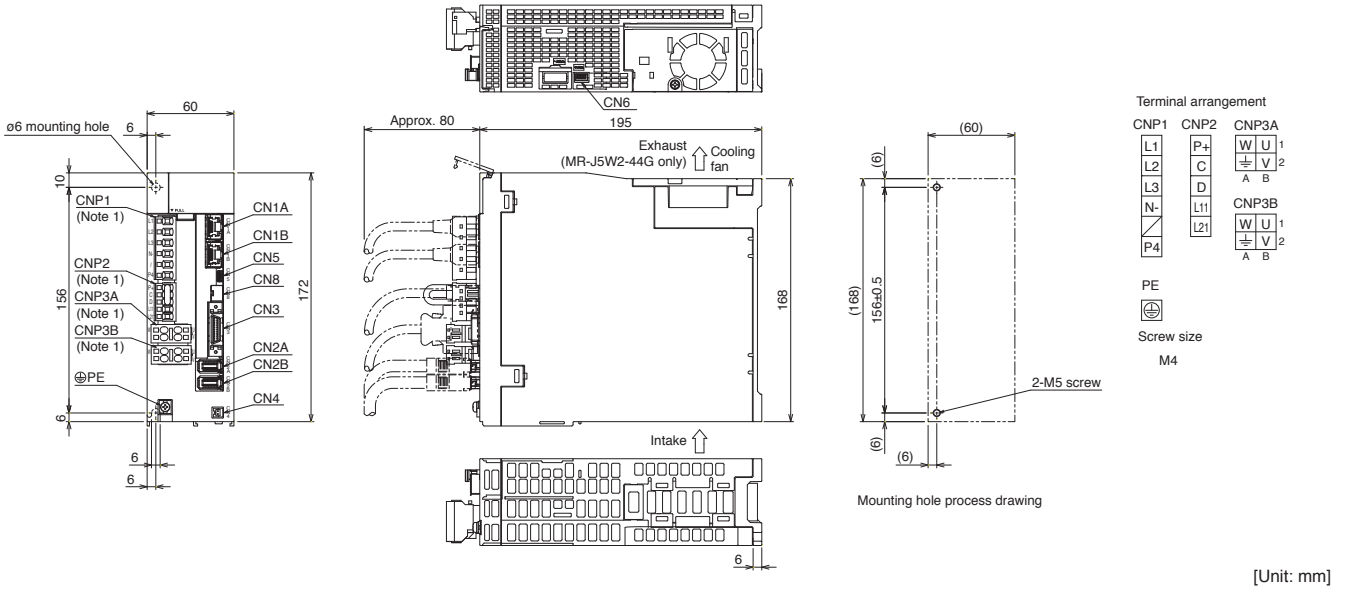

[Unit: mm]

●MR-J5W2-77G

●MR-J5W2-1010G

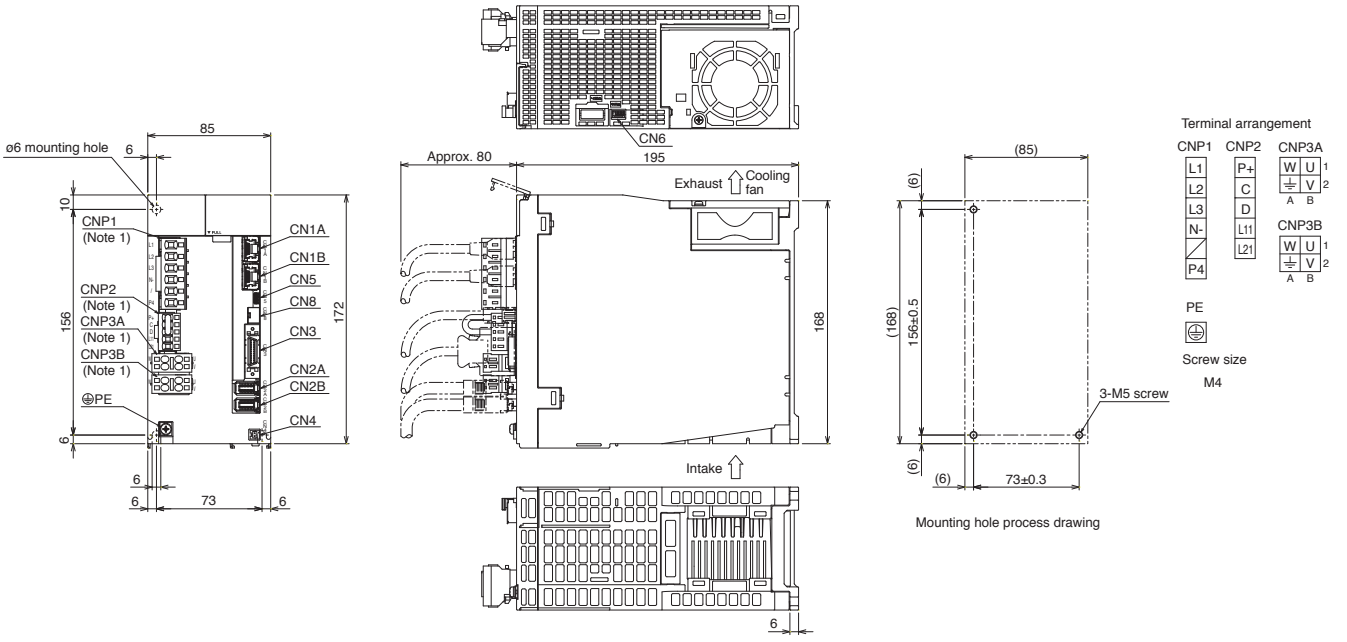

[Unit: mm]

Notes: 1. CNP1, CNP2, CNP3A, and CNP3B connectors are supplied with the servo amplifier.

MR-J5W3-G Dimensions

WG

●MR-J5W3-222G

●MR-J5W3-444G

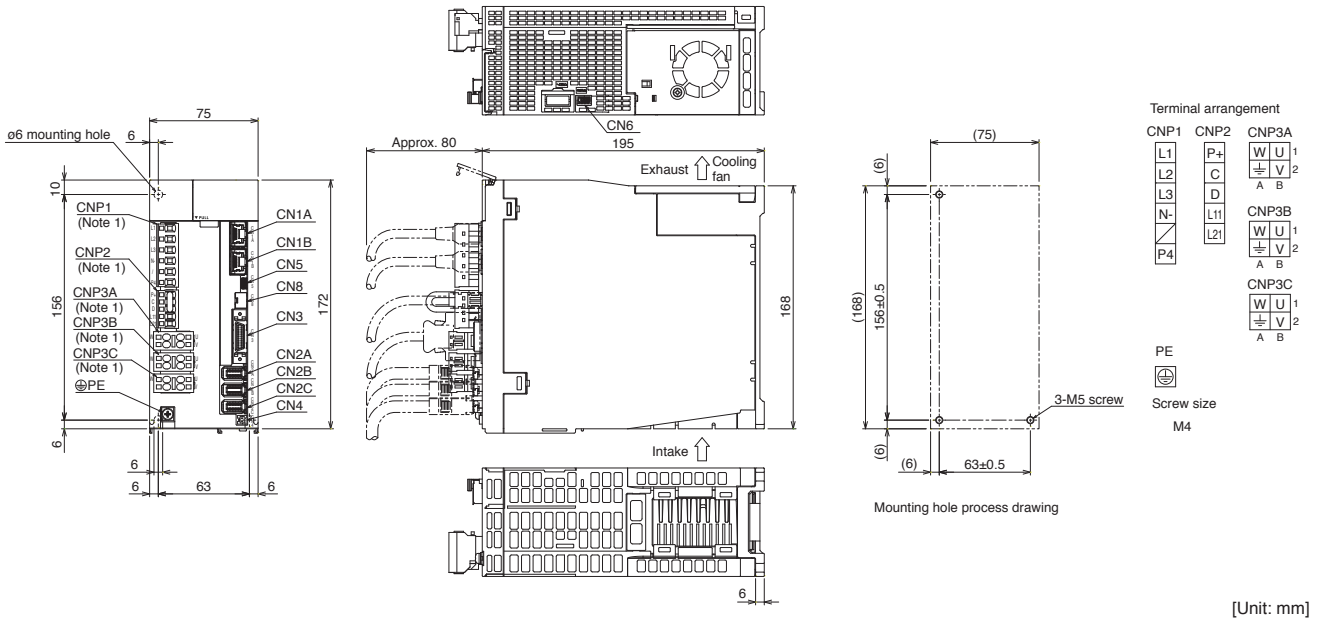

[Unit: mm]

Notes: 1. CNP1, CNP2, CNP3A, CNP3B, and CNP3C connectors are supplied with the servo amplifier.

MR-J5-A/MR-J5-A-RJ Connections with Peripheral Equipment (Note 1)

A A-RJ

Peripheral equipment is connected to MR-J5-A/MR-J5-A-RJ as described below. Connectors, cables, options, and other necessary equipment are available so that users can set up the servo amplifier easily and start using it right away.

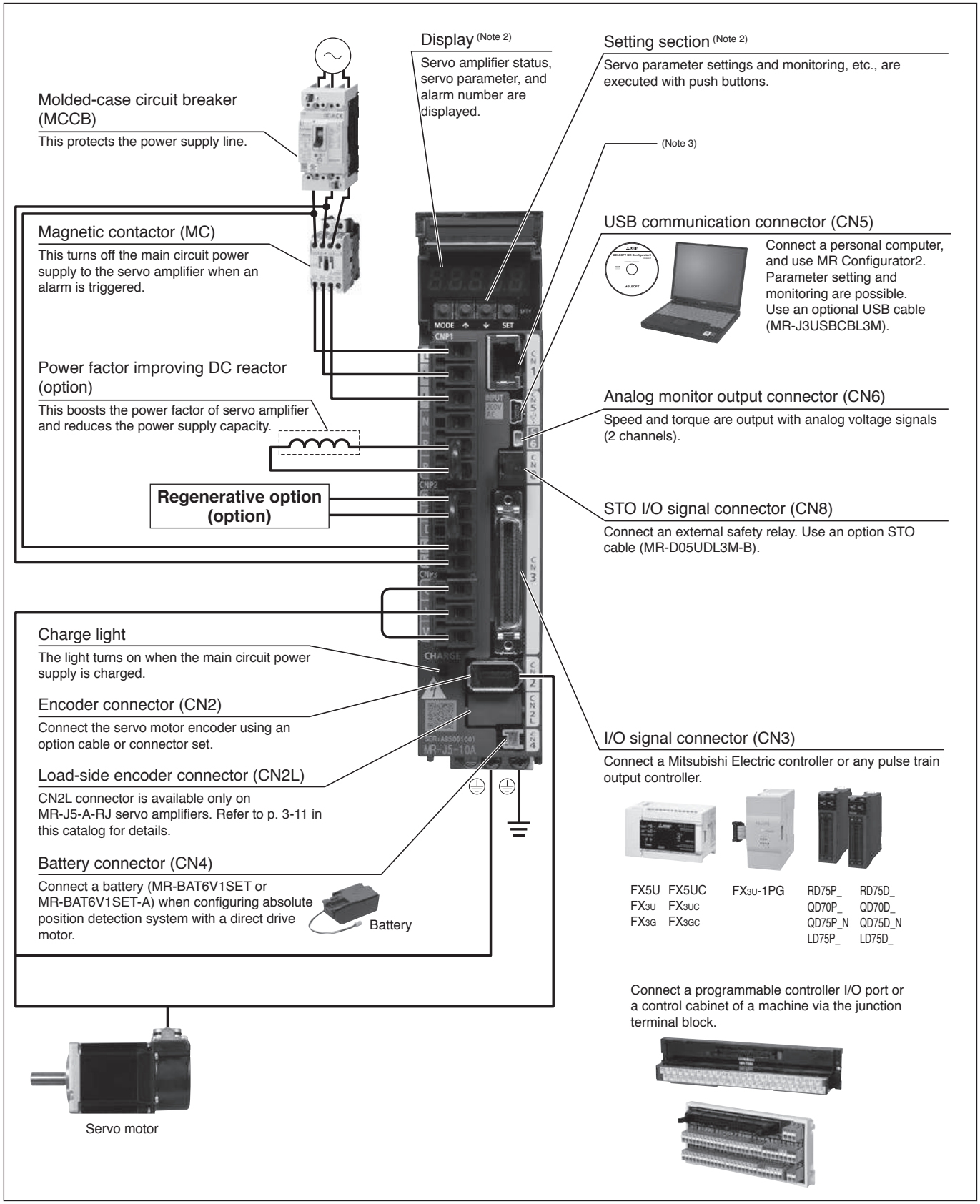

Notes: 1. Refer to "MR-J5 User's Manual" for the actual connections.
2. This picture shows when the display cover is open.
3. This is for manufacturer setting.

MR-J5-A/MR-J5-A-RJ (General-Purpose Interface) Specifications

A A-RJ

Servo amplifier model MR-J5-_(-RJ)			10A	20A	40A	60A	70A	100A	200A	350A
Output	Voltage		3-phase 0 V AC to 240 V AC							
	Rated current	[A]	1.3	1.8	2.8	3.2	5.8	6.0	11.0	17.0
Main circuit power supply input	Voltage/ frequency (Note 1)	AC input	3-phase or 1-phase 200 V AC to 240 V AC, 50 Hz/60 Hz					3-phase or 1-phase 200 V AC to 240 V AC, 50 Hz/60 Hz (Note 7)		3-phase 200 V AC to 240 V AC, 50 Hz/60 Hz
		DC input (Note 8)	283 V DC to 340 V DC							
	Rated current (Note 6)	[A]	0.9	1.5	2.6	3.2	3.8	5.0	10.5	16.0
	Permissible voltage fluctuation	AC input	3-phase or 1-phase 170 V AC to 264 V AC					3-phase or 1-phase 170 V AC to 264 V AC (Note 7)		3-phase 170 V AC to 264 V AC
		DC input (Note 8)	241 V DC to 374 V DC							
	Permissible frequency fluctuation		±5 % maximum							
Control circuit power supply input	Voltage/ frequency	AC input	1-phase 200 V AC to 240 V AC, 50 Hz/60 Hz							
		DC input (Note 8)	283 V DC to 340 V DC							
	Rated current	[A]	0.2							
	Permissible voltage fluctuation	AC input	1-phase 170 V AC to 264 V AC							
		DC input (Note 8)	241 V DC to 374 V DC							
	Permissible frequency fluctuation		±5 % maximum							
	Power consumption	[W]	30							
Interface power supply			24 V DC ± 10 % (required current capacity: 0.5 A (including CN8 connector signals))							
Control method			Sine-wave PWM control/current control method							
Permissible regenerative power of the built-in regenerative resistor (Note 2, 3)		[W]	-	10			30		100	
Dynamic brake (Note 4)			Built-in							
Communication function	USB		Connect a personal computer (MR Configurator2 compatible)							
Encoder output pulse			Compatible (A/B/Z-phase pulse)							
Analog monitor			2 channels							
Position control mode	Maximum input pulse frequency		4 Mpulses/s (when using differential receiver), 200 kpulses/s (when using open collector)							
	Positioning feedback pulse		Encoder resolution: 26 bits							
	Command pulse multiplying factor		Electronic gear A/B multiple, A: 1 to 2147483647, B: 1 to 2147483647, 1/10 < A/B < 64000							
	In-position range setting		0 pulse to ±16777215 pulses (command pulse unit)							
	Error excessive		±3 rotations							
	Torque limit		Set by servo parameters or external analog input (0 V DC to +10 V DC/maximum torque)							
Speed control mode	Speed control range		Analog speed command 1:2000, internal speed command 1:5000							
	Analog speed command input		0 V DC to ±10 V DC/rated speed (Speed at 10 V is changeable with [Pr. PC12].)							
	Speed fluctuation rate		±0.01 % maximum (load fluctuation: 0 % to 100 %), 0 % (power fluctuation: ±10 %) ±0.2 % maximum (ambient temperature: 25 °C ± 10 °C) only when using analog speed command							
	Torque limit		Set by servo parameters or external analog input (0 V DC to +10 V DC/maximum torque)							
Torque control mode	Analog torque command input		0 V DC to ±8 V DC/maximum torque (input impedance: 10 kΩ to 12 kΩ)							
	Speed limit		Set by servo parameters or external analog input (0 V DC to ± 10 V DC/rated speed)							
Servo functions			Advanced vibration suppression control II, adaptive filter II, robust filter, quick tuning, auto tuning, one-touch tuning, tough drive function, drive recorder function, machine diagnosis function (including failure prediction), power monitoring function, lost motion compensation function							
Protective functions			Overcurrent shut-off, regenerative overvoltage shut-off, overload shut-off (electronic thermal), servo motor overheat protection, encoder error protection, regenerative error protection, undervoltage protection, instantaneous power failure protection, overspeed protection, error excessive protection, magnetic pole detection protection, linear servo control fault protection							
Functional safety			STO (IEC/EN 61800-5-2)							

MR-J5-A/MR-J5-A-RJ (General-Purpose Interface) Specifications

A A-RJ

Servo amplifier model MR-J5-_(-RJ)		10A	20A	40A	60A	70A	100A	200A	350A
Safety performance	Standards certified by CB (Note 9)	EN ISO 13849-1:2015 Category 3 PL e, IEC 61508 SIL 3, EN 62061 SIL CL 3, EN 61800-5-2							
	Response performance	8 ms or less (STO input OFF → energy shut-off)							
	Test pulse input (STO) (Note 5)	Test pulse interval: 1 Hz to 25 Hz, test pulse off time: 1 ms maximum							
	Mean time to dangerous failure (MTTFd)	MTTFd ≥ 100 [years] (314a)							
	Diagnostic coverage (DC)	DC = Medium, 97.6 [%]							
	Probability of dangerous Failure per Hour (PFH)	PFH = 6.4×10^{-9} [1/h]							
Structure (IP rating)		Natural cooling, open (IP20)				Force cooling, open (IP20)			
Close mounting	3-phase power supply input	Possible (Note 10)							
	1-phase power supply input	Possible (Note 10)					Not possible		-
Mass [kg]		0.8			1.0	1.4		2.2	

Notes:
1. Rated output and speed of a rotary servo motor and a direct drive motor; and continuous thrust and maximum speed of a linear servo motor are applicable when the servo amplifier is operated within the specified power supply voltage and frequency.
2. Select the most suitable regenerative option for your system with our drive system sizing software Motorizer.
3. Refer to "Regenerative Option" in this catalog for the permissible regenerative power [W] when a regenerative option is used.
4. When using the dynamic brake, refer to "MR-J5 User's Manual" for the permissible load to motor inertia ratio and the permissible load to mass ratio.
5. The test pulse is a signal for the external circuit to perform self-diagnosis by turning off the signals to the servo amplifier instantaneously at regular intervals.
6. This value is applicable when a 3-phase power supply is used.
7. When a 1-phase 200 V AC to 240 V AC power supply is used, use the servo amplifiers at 75 % or less of the effective load ratio.
8. For a connection example of power supply circuit with DC input, refer to "MR-J5 User's Manual".
9. The safety level depends on the setting value of [Pr. PF18 STO diagnosis error detection time] and whether or not STO input diagnosis is performed by TOFB output. Refer to "MR-J5 User's Manual" for details.
10. When the servo amplifiers are closely mounted, keep the ambient temperature within 0 °C to 45 °C, or use the servo amplifiers at 75 % or less of the effective load ratio.

MR-J5-A/MR-J5-A-RJ Standard Wiring Diagram Example: Position Control Operation A A-RJ

Connecting to RD75D

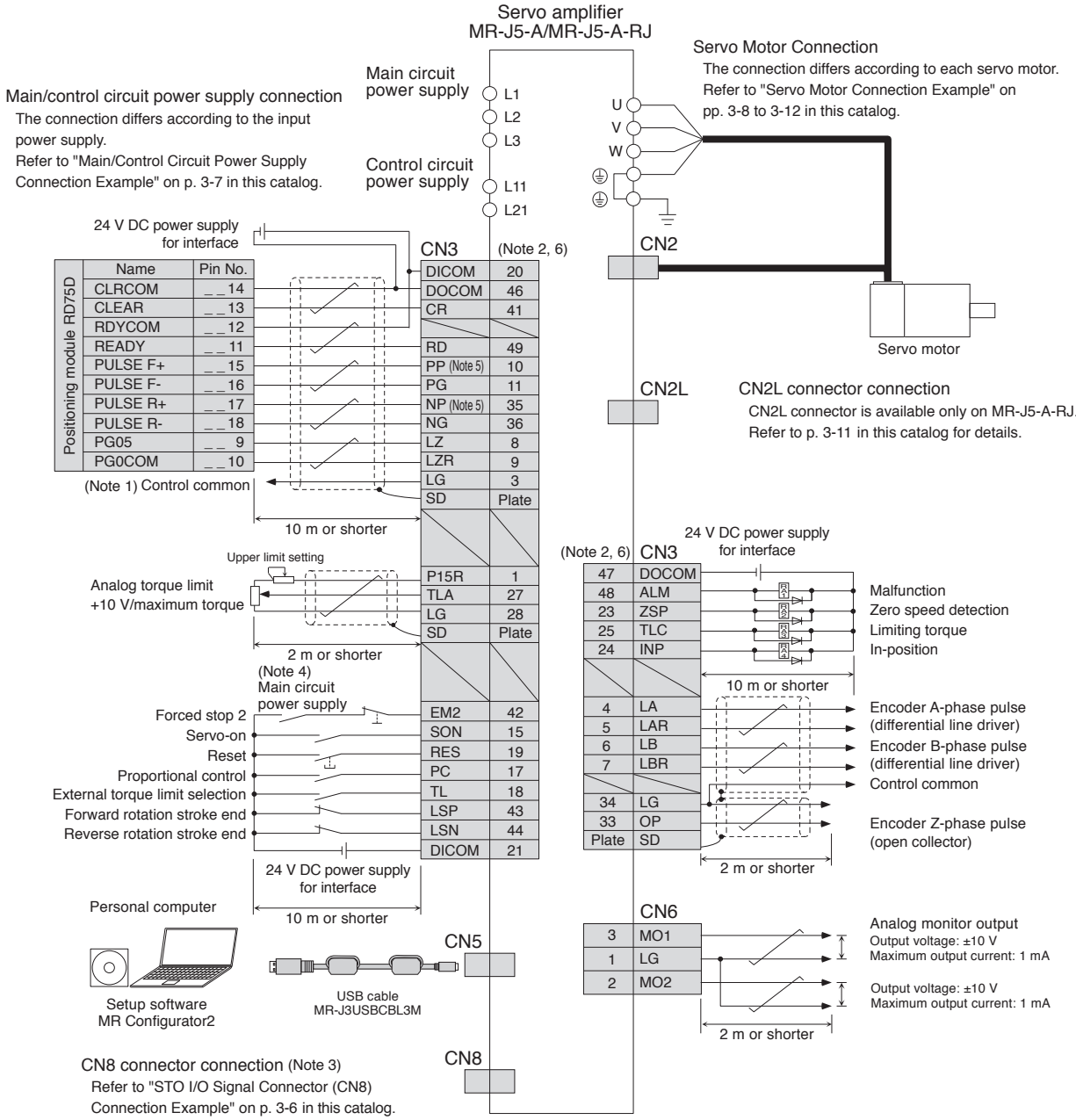

Notes:
1. This connection is not necessary for RD75D Positioning module. Note that the connection between LG and the control common terminal is recommended for some Positioning modules to improve noise tolerance.
2. This is for sink wiring. Source wiring is also possible.
3. Attach a short-circuit connector supplied with the servo amplifier when the STO function is not used.
4. To prevent an unexpected restart of the servo amplifier, create a circuit to turn off EM2 (Forced stop 2) when the main circuit power is turned off.
5. Pulse train input is available with sink input and source input of open-collector type. When using the source input, use PP2 and NP2 terminals. Refer to "MR-J5 User's Manual" for details.
6. The pins with the same signal name are connected in the servo amplifier.

⚠ Be sure to read through User's Manual for the actual wiring and use. Use the equipment after you have a full knowledge of the equipment, safety information and instructions.

MR-J5-A/MR-J5-A-RJ Standard Wiring Diagram Example: Speed Control Operation

A A-RJ

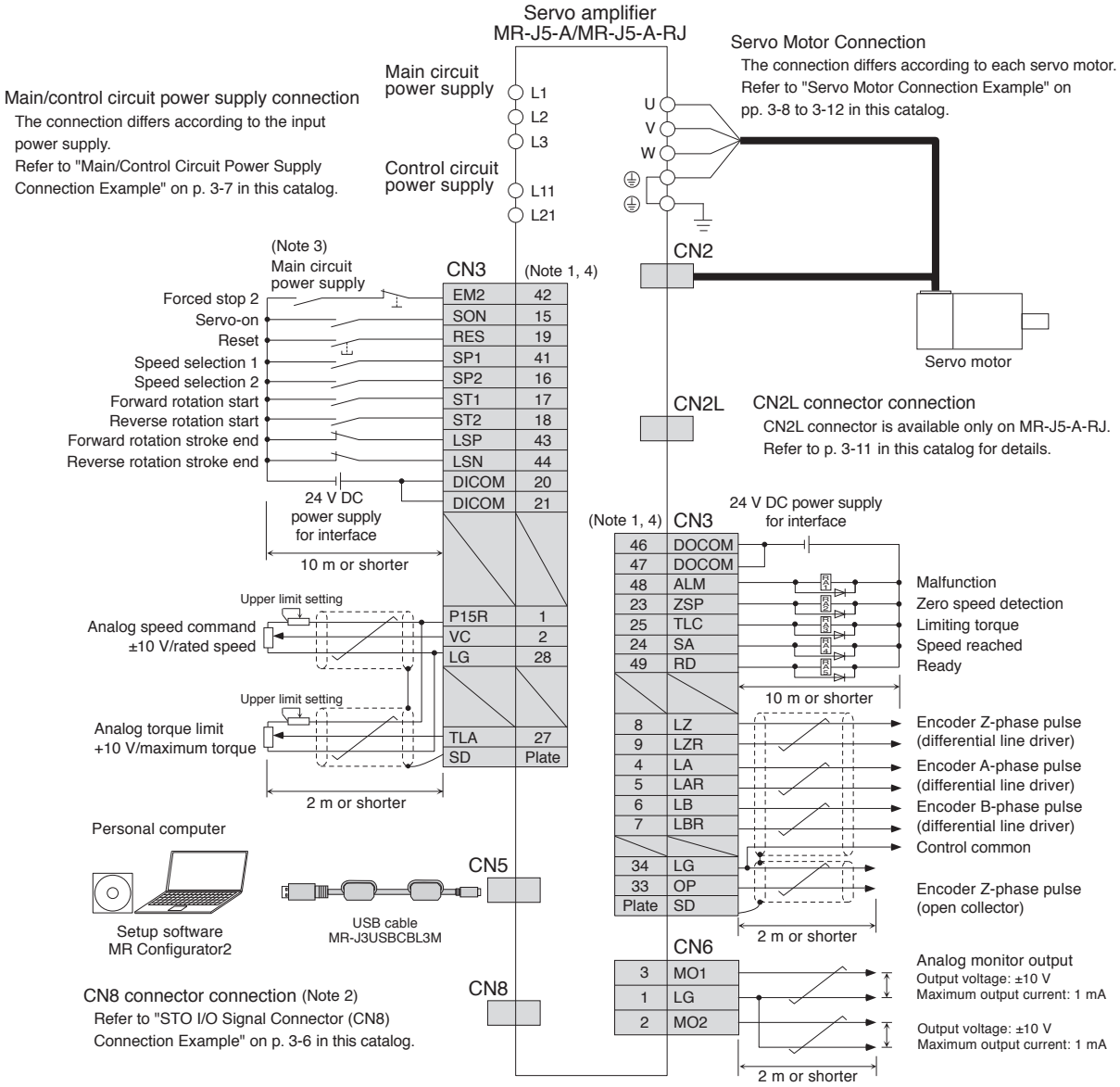

Notes: 1. This is for sink wiring. Source wiring is also possible.
2. Attach a short-circuit connector supplied with the servo amplifier when the STO function is not used.
3. To prevent an unexpected restart of the servo amplifier, create a circuit to turn off EM2 (Forced stop 2) when the main circuit power is turned off.
4. The pins with the same signal name are connected in the servo amplifier.

⚠ Be sure to read through User's Manual for the actual wiring and use. Use the equipment after you have a full knowledge of the equipment, safety information and instructions.

MR-J5-A/MR-J5-A-RJ Standard Wiring Diagram Example: Torque Control Operation

A A-RJ

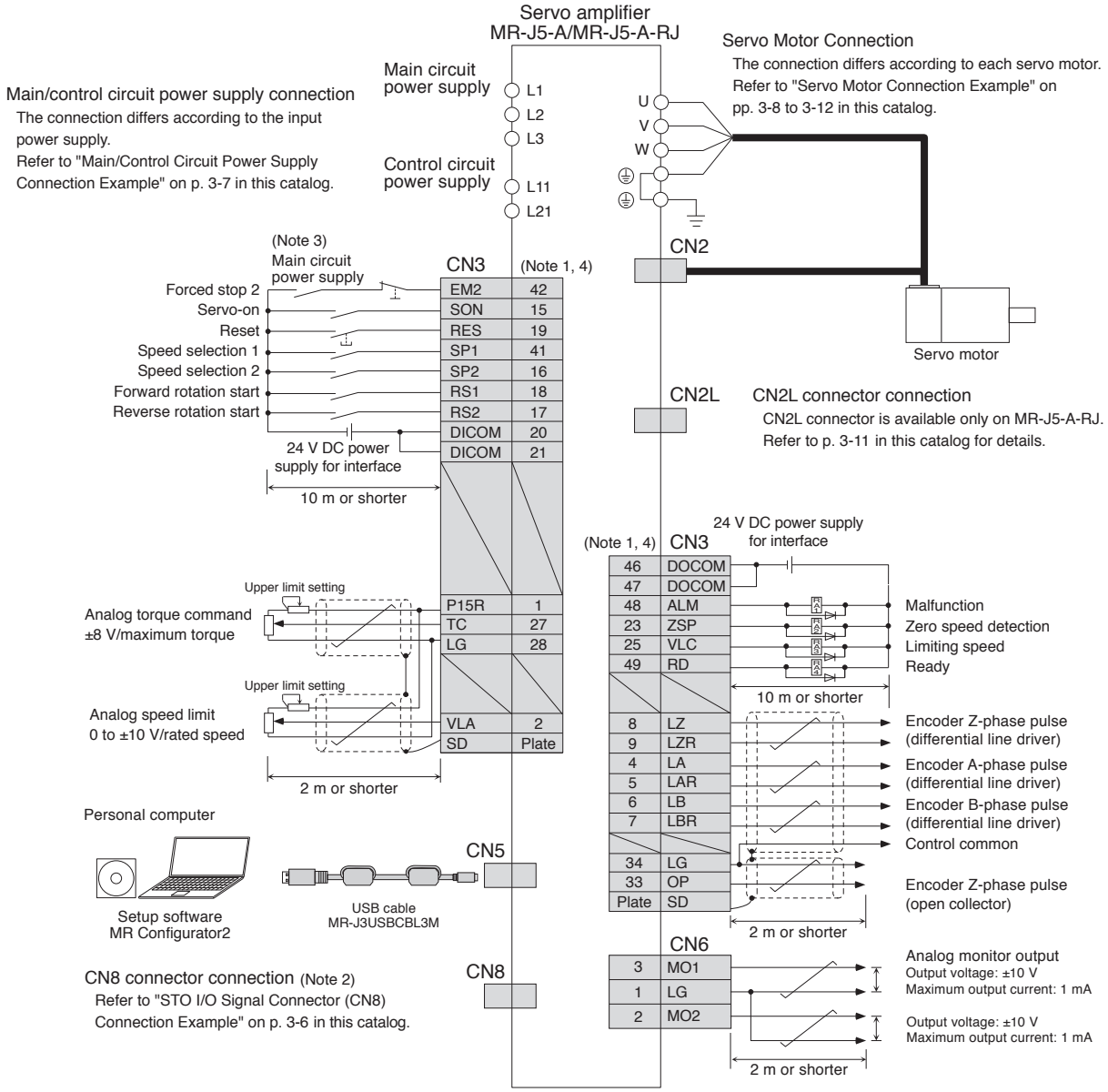

Notes: 1. This is for sink wiring. Source wiring is also possible.
2. Attach a short-circuit connector supplied with the servo amplifier when the STO function is not used.
3. To prevent an unexpected restart of the servo amplifier, create a circuit to turn off EM2 (Forced stop 2) when the main circuit power is turned off.
4. The pins with the same signal name are connected in the servo amplifier.

⚠ Be sure to read through User's Manual for the actual wiring and use. Use the equipment after you have a full knowledge of the equipment, safety information and instructions.

MR-J5-A/MR-J5-A-RJ Dimensions

A A-RJ

●MR-J5-10A, MR-J5-10A-RJ

●MR-J5-20A, MR-J5-20A-RJ

●MR-J5-40A, MR-J5-40A-RJ

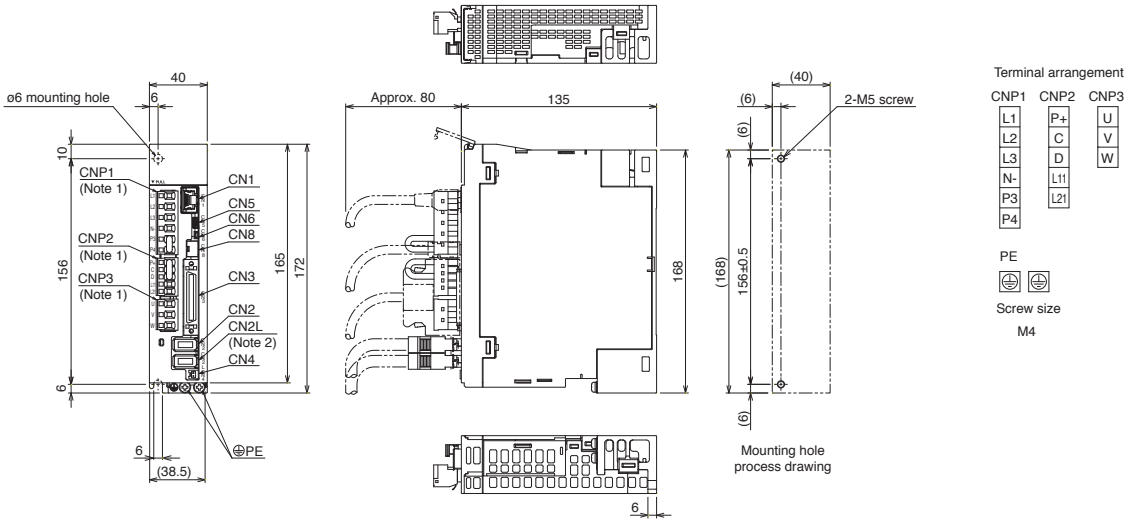

[Unit: mm]

●MR-J5-60A, MR-J5-60A-RJ

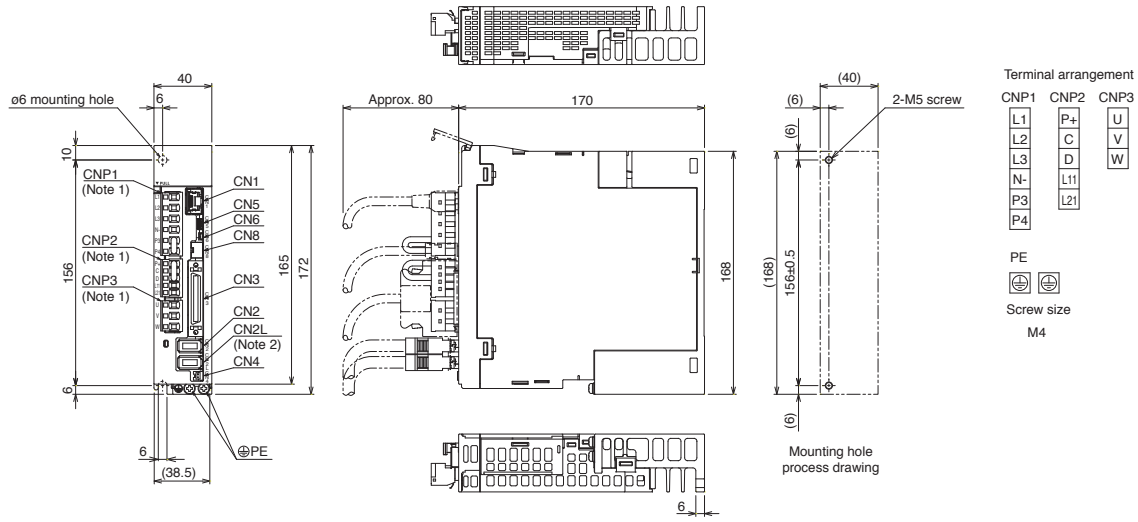

[Unit: mm]

Notes: 1. CNP1, CNP2, and CNP3 connectors are supplied with the servo amplifier.
2. CN2L connector is not available for MR-J5-A servo amplifiers.

MR-J5-A/MR-J5-A-RJ Dimensions

A A-RJ

●MR-J5-70A, MR-J5-70A-RJ

●MR-J5-100A, MR-J5-100A-RJ

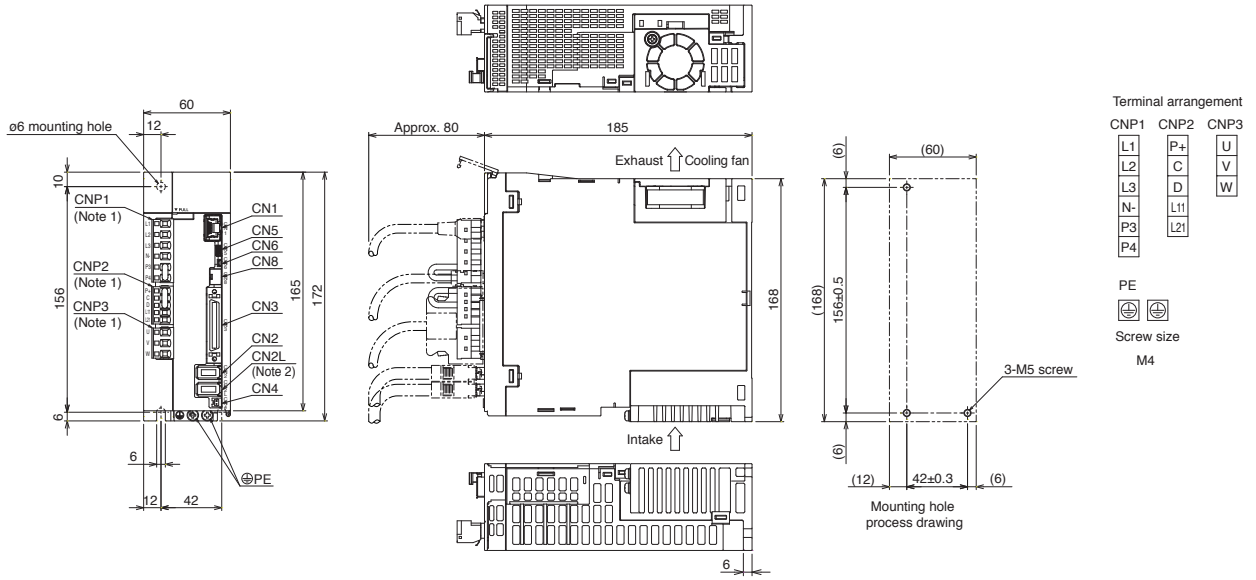

[Unit: mm]

●MR-J5-200A, MR-J5-200A-RJ

●MR-J5-350A, MR-J5-350A-RJ

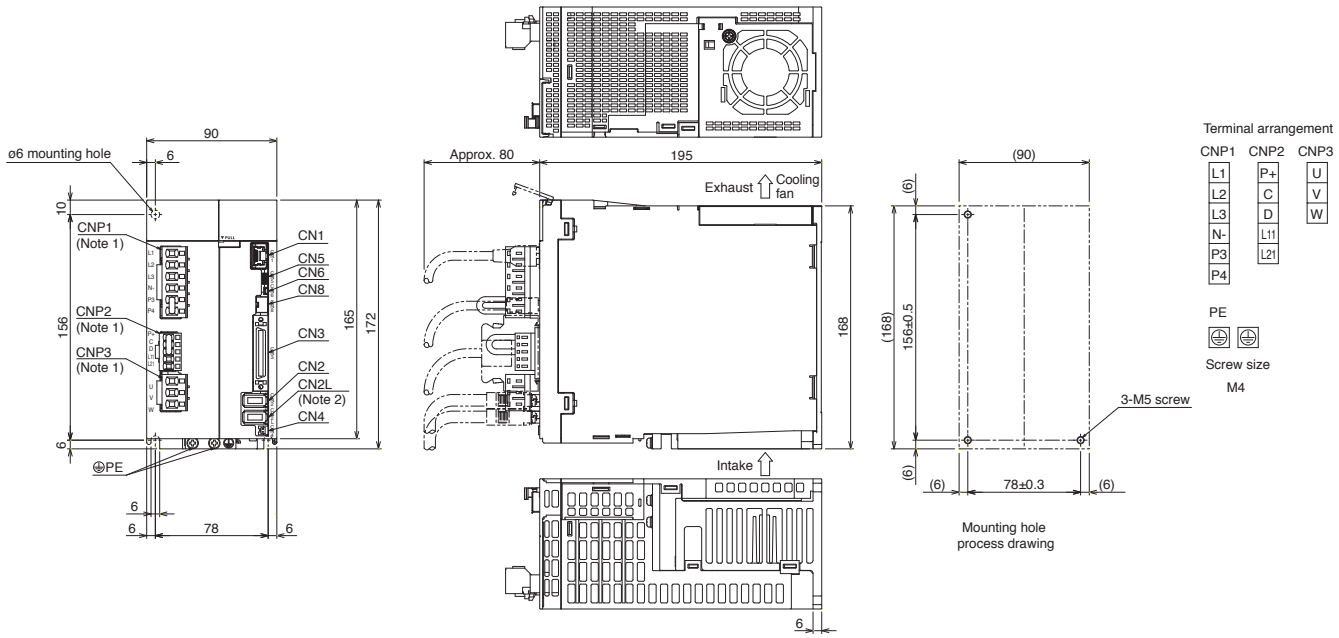

[Unit: mm]

Notes: 1. CNP1, CNP2, and CNP3 connectors are supplied with the servo amplifier.
2. CN2L connector is not available for MR-J5-A servo amplifiers.

MEMO

4 Rotary Servo Motors

Model Designation 4-2

HK-KT Series

Specifications 4-3

Torque Characteristics 4-6

Dimensions 4-9

Special Shaft Dimensions 4-11

HK-ST Series

Specifications 4-12

Torque Characteristics 4-14

Dimensions 4-16

Special Shaft Dimensions 4-17

Power Supply Capacity 4-18

* Refer to p. 7-55 in this catalog for conversion of units.

Model Designation (Note 3, 4)

H K - K T 0 5 3 4 U W B

Symbol	Shaft shape
None	Standard (Straight shaft)
D	D-cut shaft (Note 2)
K	Key shaft (with a double round-ended key) (Note 2)
N	Key shaft (without key) (Note 2)

Symbol	Oil seal (Note 1)
None	None
J	Installed

Symbol	Electromagnetic brake
None	None
B	Installed

Symbol	Structure
None	Standard
U	Flat type
A	Long type (Small flange type)

Symbol	Symbol	Motor type
None	W	HK-KT_W HK-ST_W
4		HK-KT_4_W HK-ST_4_W

Symbol	Rated speed [r/min]
2	2000
3	3000

Symbol	Rated output [kW]
05	0.05
1	0.1
1M	0.15
2	0.2
4	0.4
5	0.5
6	0.6
7M	0.75
10	1.0
15	1.5
17	1.75
20	2.0
30	3.0
35	3.5
50	5.0

Symbol	Inertia/capacity
HK-KT	Low inertia, small capacity
HK-ST	Medium inertia, medium capacity

Notes: 1. Dimensions are the same regardless of whether or not an oil seal is installed.
2. Refer to the special shaft dimensions of each series in this catalog for the available models.
3. Contact your local sales office for geared servo motors.
4. This section describes what each symbol in a model name indicates. Some combinations of symbols are not available.

HK-KT_W (Low Inertia, Small Capacity)

Specifications when connected with a 200 V servo amplifier

Flange size		[mm]	40 × 40			60 × 60			
Rotary servo motor model		HK-KT	053W	13W	1M3W	13UW	23W	43W	63W
Continuous running duty (Note 4)	Rated output	[kW]	0.05	0.1	0.15	0.1	0.2	0.4	0.6
	Rated torque (Note 5)	[N•m]	0.16	0.32	0.48	0.32	0.64	1.3	1.9
Maximum torque (Note 3)		[N•m]	0.56 (0.72)	1.1 (1.4)	1.7 (2.1)	1.1 (1.4)	2.2 (2.9)	4.5 (5.7)	6.7 (8.6)
Rated speed (Note 4)		[r/min]	3000						
Maximum speed (Note 4)		[r/min]	6700						
Power rate at continuous rated torque	Standard	[kW/s]	6.4	14.8	23.3	8.4	19.4	39.5	61.0
	With electromagnetic brake	[kW/s]	5.8	14.0	22.4	6.6	16.0	36.7	58.0
Rated current		[A]	1.3	1.2	1.2	1.1	1.4	2.6	4.5
Maximum current (Note 3)		[A]	4.6 (6.2)	4.6 (6.0)	4.5 (6.0)	4.6 (6.0)	5.4 (7.1)	9.8 (14)	19 (25)
Moment of inertia J	Standard	[× 10^{-4} kg•m^2]	0.0394	0.0686	0.0977	0.121	0.209	0.410	0.598
	With electromagnetic brake	[× 10^{-4} kg•m^2]	0.0434	0.0725	0.102	0.153	0.254	0.442	0.629
Recommended load to motor inertia ratio (Note 1)			20 times or less			10 times or less	23 times or less (Note 8)	23 times or less	25 times or less
Speed/position detector			Batteryless absolute/incremental 26-bit encoder (resolution: 67,108,864 pulses/rev)						
Oil seal			None (Servo motors with an oil seal are available. (HK-KT_J)) (Note 6)						
Electromagnetic brake			None (Servo motors with an electromagnetic brake are available. (HK-KT_B))						
Thermistor			None						
Insulation class			155 (F)						
Structure			Totally enclosed, natural cooling (IP rating: IP67) (Note 2, 7)						
Vibration resistance *1			X: 49 m/s^2 Y: 49 m/s^2						
Vibration rank			V10 *3						
Permissible load for the shaft *2	L	[mm]	25				30		
	Radial	[N]	88				245		
	Thrust	[N]	59				98		
Mass	Standard	[kg]	0.27	0.37	0.47	0.57	0.77	1.2	1.5
	With electromagnetic brake	[kg]	0.53	0.63	0.73	0.99	1.2	1.6	1.9

Notes: 1. Contact your local sales office if the load to motor inertia ratio exceeds the value in the table.
2. The shaft-through portion is excluded. Refer to asterisk 4 of "Annotations for Rotary Servo Motor Specifications" on p. 4-20 in this catalog for the shaft-through portion.
3. The value in brackets is applicable when the torque is increased with a combination with a larger-capacity servo amplifier. Refer to "Combinations of Rotary Servo Motors and Servo Amplifiers" in this catalog for the available combinations.
4. The continuous running duty and the speed are not guaranteed when the power supply voltage is dropped.
5. When unbalanced torque is generated, such as in a vertical lift machine, keep the unbalanced torque of the machine under 70 % of the servo motor rated torque.
6. For the HK-KT053W with an oil seal, use 80 % of the rated output.
7. When IP67 cables are required, please contact Mitsubishi Electric System & Service Co., Ltd. OVERSEAS SERVICE SECTION. (Email: osb.webmaster@ melsc.jp)
8. 28 times or less for 6000 r/min or less.

Refer to "Annotations for Rotary Servo Motor Specifications" on p. 4-20 in this catalog for details about asterisks 1 to 3.

Electromagnetic brake specifications (Note 1)

Model		HK-KT	053WB	13WB	1M3WB	13UWB	23WB	43WB	63WB
Type			Spring actuated type safety brake						
Rated voltage			24 V DC $^{0}_{-10}$%						
Power consumption		[W] at 20 °C	6.4				7.9		
Electromagnetic brake static friction torque		[N•m]	0.48 or higher				1.9 or higher		
Permissible braking work	Per braking	[J]	5.6				22		
	Per hour	[J]	56				220		
Electromagnetic brake life (Note 2)	Number of braking times		20000						
	Work per braking	[J]	5.6				22		

Notes: 1. The electromagnetic brake is for holding. It cannot be used for deceleration applications.
2. Brake gap is not adjustable. Electromagnetic brake life is defined as the time period until readjustment is needed.

HK-KT_W (Low Inertia, Small Capacity)

Specifications when connected with a 200 V servo amplifier

Flange size		[mm]	80 × 80				90 × 90				
Rotary servo motor model		HK-KT	23UW	43UW	7M3W	103W	7M3UW	103UW	153W	203W	202W
Continuous running duty (Note 4)	Rated output	[kW]	0.2	0.4	0.75	1.0	0.75	1.0	1.5	2.0	2.0
	Rated torque (Note 5)	[N•m]	0.64	1.3	2.4	3.2	2.4	3.2	4.8	6.4	9.5
Maximum torque (Note 3)		[N•m]	1.9 (2.5)	4.5 (5.7)	8.4 (10.7)	11.1 (14.3)	8.4 (10.7)	11.1 (14.3)	16.7 (21.5)	19.1 (25.5)	28.6 (38.2)
Rated speed (Note 4)		[r/min]	3000								2000
Maximum speed (Note 4)		[r/min]	6700			6500	6700	6000	5000		3000
Power rate at continuous rated torque	Standard	[kW/s]	9.7	22.3	41.6	60.3	27.0	37.0	52.0	71.7	111
	With electromagnetic brake	[kW/s]	7.3	18.8	37.7	56.0	23.3	32.9	48.3	67.7	107
Rated current		[A]	1.5	2.1	4.7	5.0	4.0	4.9	6.5	9.0	9.0
Maximum current (Note 3)		[A]	5.9 (9.0)	9.2 (13)	20 (26)	21 (28)	16 (22)	21 (27)	26 (34)	30 (41)	30 (41)
Moment of inertia J	Standard	[× 10^{-4} kg•m^2]	0.419	0.726	1.37	1.68	2.11	2.74	4.38	5.65	8.18
	With electromagnetic brake	[× 10^{-4} kg•m^2]	0.557	0.864	1.51	1.81	2.45	3.08	4.72	5.99	8.53
Recommended load to motor inertia ratio (Note 1)			10 times or less		16 times or less	17 times or less	10 times or less	15 times or less			
Speed/position detector			Batteryless absolute/incremental 26-bit encoder (resolution: 67,108,864 pulses/rev)								
Oil seal			None (Servo motors with an oil seal are available. (HK-KT_J))								
Electromagnetic brake			None (Servo motors with an electromagnetic brake are available. (HK-KT_B))								
Thermistor			None								
Insulation class			155 (F)								
Structure			Totally enclosed, natural cooling (IP rating: IP67) (Note 2, 6)								
Vibration resistance *1			X: 49 m/s^2 Y: 49 m/s^2				X: 24.5 m/s^2 Y: 49 m/s^2		X: 24.5 m/s^2 Y: 24.5 m/s^2		
Vibration rank			V10 *3								
Permissible load for the shaft *2	L	[mm]	30		40						
	Radial	[N]	245		392						
	Thrust	[N]	98		147						
Mass	Standard	[kg]	1.2	1.5	2.2	2.4	2.3	2.7	3.6	4.4	5.9
	With electromagnetic brake	[kg]	1.9	2.2	2.9	3.1	3.4	3.8	4.7	5.5	7.0

Notes: 1. Contact your local sales office if the load to motor inertia ratio exceeds the value in the table.
2. The shaft-through portion is excluded. Refer to asterisk 4 of "Annotations for Rotary Servo Motor Specifications" on p. 4-20 in this catalog for the shaft-through portion.
3. The value in brackets is applicable when the torque is increased with a combination with a larger-capacity servo amplifier. Refer to "Combinations of Rotary Servo Motors and Servo Amplifiers" in this catalog for the available combinations.
4. The continuous running duty and the speed are not guaranteed when the power supply voltage is dropped.
5. When unbalanced torque is generated, such as in a vertical lift machine, keep the unbalanced torque of the machine under 70 % of the servo motor rated torque.
6. When IP67 cables are required, please contact Mitsubishi Electric System & Service Co., Ltd. OVERSEAS SERVICE SECTION. (Email: osb.webmaster@ melsc.jp)

Refer to "Annotations for Rotary Servo Motor Specifications" on p. 4-20 in this catalog for details about asterisks 1 to 3.

Electromagnetic brake specifications (Note 1)

Model		HK-KT	23UWB	43UWB	7M3WB	103WB	7M3UWB	103UWB	153WB	203WB	202WB
Type			Spring actuated type safety brake								
Rated voltage			24 V DC $^{0}_{-10}$%								
Power consumption		[W] at 20 °C	8.2		10		9.0		13.8		
Electromagnetic brake static friction torque		[N•m]	1.3 or higher		3.2 or higher		3.2 or higher		9.5 or higher		
Permissible braking work	Per braking	[J]	22		64		66		64		
	Per hour	[J]	220		640		660		640		
Electromagnetic brake life (Note 2)	Number of braking times		20000								
	Work per braking	[J]	22		64		33		64		

Notes: 1. The electromagnetic brake is for holding. It cannot be used for deceleration applications.
2. Brake gap is not adjustable. Electromagnetic brake life is defined as the time period until readjustment is needed.

HK-KT_4_W (Low Inertia, Small Capacity)

Specifications when connected with a 200 V servo amplifier

Flange size		[mm]	60 × 60		80 × 80		90 × 90		
Rotary servo motor model		HK-KT	434W	634W	7M34W	1034W	1534W	2034W	2024W
Continuous running duty (Note 4)	Rated output	[kW]	0.2	0.3	0.375	0.5	0.75	1.0	1.0
	Rated torque (Note 5)	[N•m]	1.3	1.9	2.4	3.2	4.8	6.4	9.5
Maximum torque (Note 3)		[N•m]	4.5 (5.7)	6.7 (8.6)	8.4 (10.7)	11.1 (14.3)	21.5	25.5	38.2
Rated speed (Note 4)		[r/min]	1500						1000
Maximum speed (Note 4)		[r/min]	3500			3000	2500		1500
Power rate at continuous rated torque	Standard	[kW/s]	39.5	61.0	41.6	60.3	52.0	71.7	111
	With electromagnetic brake	[kW/s]	36.7	58.0	37.7	56.0	48.3	67.7	107
Rated current		[A]	1.3	2.3	2.4	2.5	3.3	4.5	4.5
Maximum current (Note 3)		[A]	4.9 (6.6)	9.1 (13)	9.7 (13)	11 (14)	17	21	21
Moment of inertia J	Standard	[× 10^{-4} kg•m^2]	0.410	0.598	1.37	1.68	4.38	5.65	8.18
	With electromagnetic brake	[× 10^{-4} kg•m^2]	0.442	0.629	1.51	1.81	4.72	5.99	8.53
Recommended load to motor inertia ratio (Note 1)			25 times or less		17 times or less		15 times or less		
Speed/position detector			Batteryless absolute/incremental 26-bit encoder (resolution: 67,108,864 pulses/rev)						
Oil seal			None (Servo motors with an oil seal are available. (HK-KT_J))						
Electromagnetic brake			None (Servo motors with an electromagnetic brake are available. (HK-KT_B))						
Thermistor			None						
Insulation class			155 (F)						
Structure			Totally enclosed, natural cooling (IP rating: IP67) (Note 2, 6)						
Vibration resistance *1			X: 49 m/s² Y: 49 m/s²				X: 24.5 m/s² Y: 24.5 m/s²		
Vibration rank			V10 *3						
Permissible load for the shaft *2	L	[mm]	30		40				
	Radial	[N]	245		392				
	Thrust	[N]	98		147				
Mass	Standard	[kg]	1.2	1.5	2.2	2.4	3.6	4.4	5.9
	With electromagnetic brake	[kg]	1.6	1.9	2.9	3.1	4.7	5.5	7.0

Notes: 1. Contact your local sales office if the load to motor inertia ratio exceeds the value in the table.
2. The shaft-through portion is excluded. Refer to asterisk 4 of "Annotations for Rotary Servo Motor Specifications" on p. 4-20 in this catalog for the shaft-through portion.
3. The value in brackets is applicable when the torque is increased with a combination with a larger-capacity servo amplifier. Refer to "Combinations of Rotary Servo Motors and Servo Amplifiers" in this catalog for the available combinations.
4. The continuous running duty and the speed are not guaranteed when the power supply voltage is dropped.
5. When unbalanced torque is generated, such as in a vertical lift machine, keep the unbalanced torque of the machine under 70 % of the servo motor rated torque.
6. When IP67 cables are required, please contact Mitsubishi Electric System & Service Co., Ltd. OVERSEAS SERVICE SECTION. (Email: osb.webmaster@ melsc.jp)

Refer to "Annotations for Rotary Servo Motor Specifications" on p. 4-20 in this catalog for details about asterisks 1 to 3.

Electromagnetic brake specifications (Note 1)

Model		HK-KT	434WB	634WB	7M34WB	1034WB	1534WB	2034WB	2024WB
Type			Spring actuated type safety brake						
Rated voltage			24 V DC $^{0}_{-10}$%						
Power consumption		[W] at 20 °C	7.9		10		13.8		
Electromagnetic brake static friction torque		[N•m]	1.9 or higher		3.2 or higher		9.5 or higher		
Permissible braking work	Per braking	[J]	22		64		64		
	Per hour	[J]	220		640		640		
Electromagnetic brake life (Note 2)	Number of braking times		20000						
	Work per braking	[J]	22		64		64		

Notes: 1. The electromagnetic brake is for holding. It cannot be used for deceleration applications.
2. Brake gap is not adjustable. Electromagnetic brake life is defined as the time period until readjustment is needed.

HK-KT_W Torque Characteristics (Note 1)

When connected with a 200 V servo amplifier

: For 3-phase 200 V AC
: For 1-phase 200 V AC

HK-KT053W
Standard torque

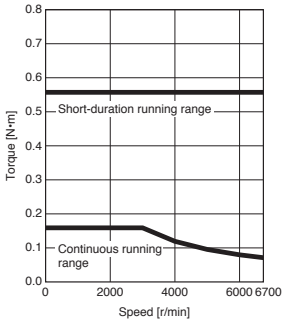

HK-KT053W
Torque increased

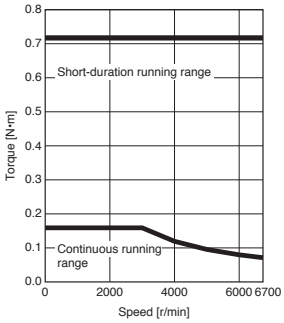

HK-KT13W
Standard torque

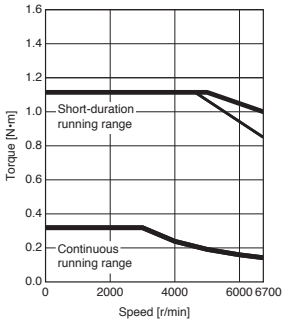

HK-KT13W
Torque increased

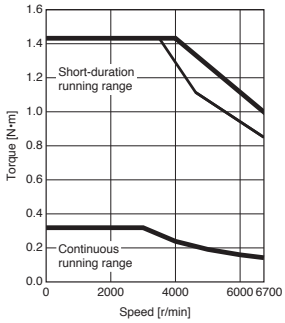

HK-KT1M3W
Standard torque

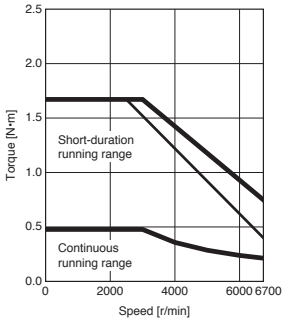

HK-KT1M3W
Torque increased

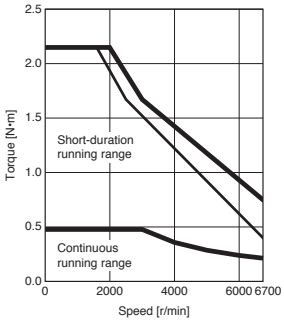

HK-KT13UW
Standard torque

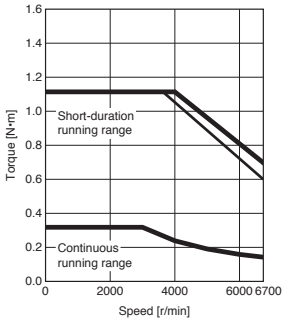

HK-KT13UW
Torque increased

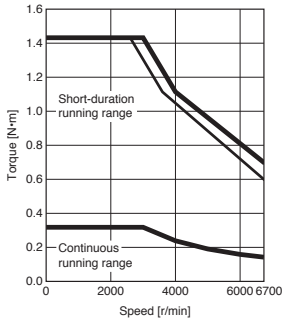

HK-KT23W
Standard torque

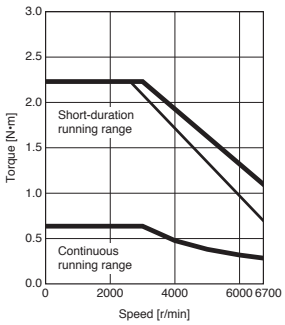

HK-KT23W
Torque increased

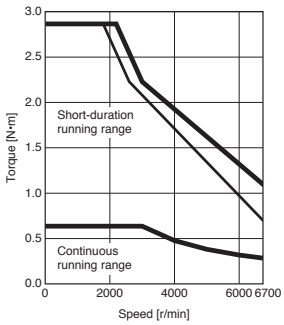

HK-KT43W
Standard torque

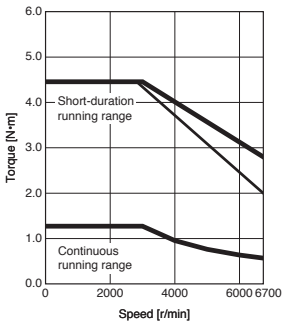

HK-KT43W
Torque increased

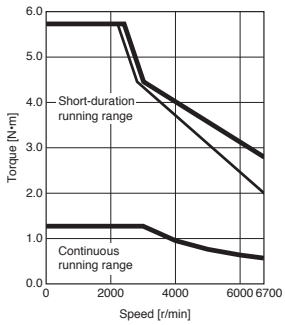

HK-KT63W
Standard torque

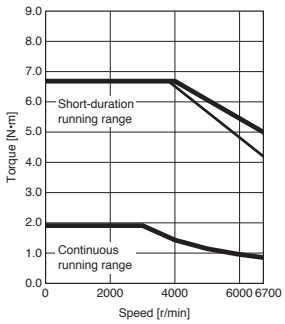

HK-KT63W
Torque increased

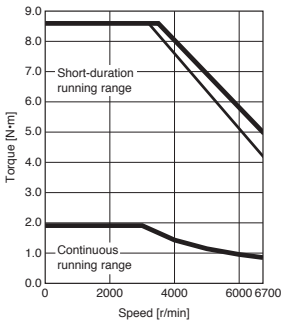

HK-KT23UW
Standard torque

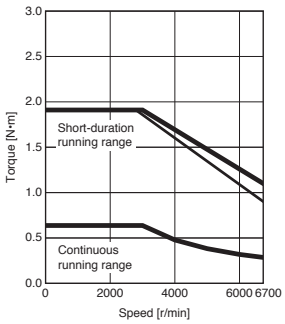

HK-KT23UW
Torque increased

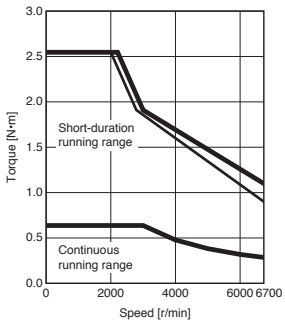

Notes: 1. Torque drops when the power supply voltage is below the specified value.

HK-KT_W Torque Characteristics (Note 1)

When connected with a 200 V servo amplifier

: For 3-phase 200 V AC
: For 1-phase 200 V AC

HK-KT43UW
Standard torque

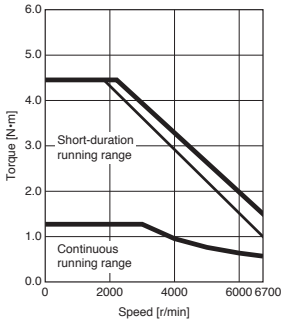

HK-KT43UW
Torque increased

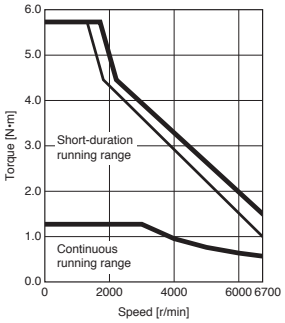

HK-KT7M3W
Standard torque

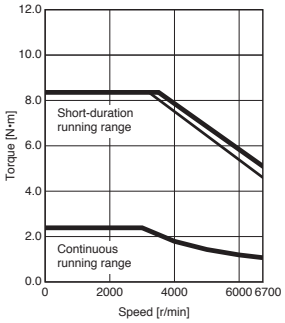

HK-KT7M3W
Torque increased

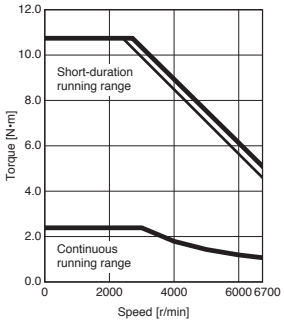

HK-KT103W
Standard torque

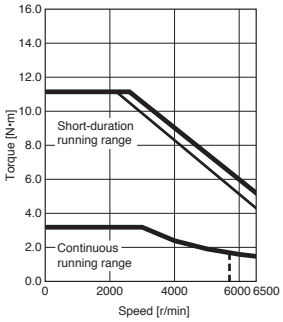

HK-KT103W
Torque increased

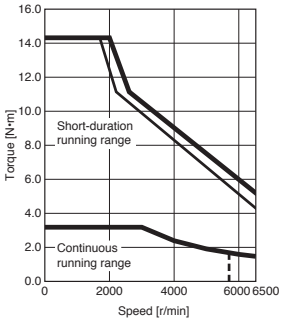

HK-KT7M3UW
Standard torque

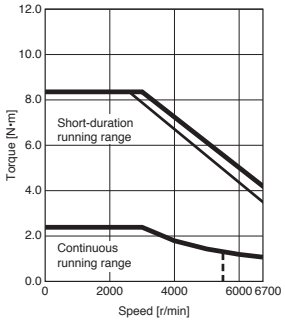

HK-KT7M3UW
Torque increased

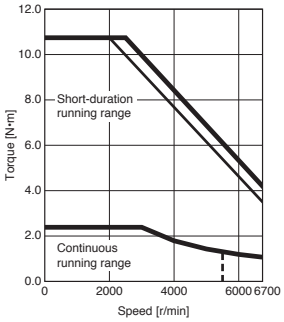

HK-KT103UW
Standard torque

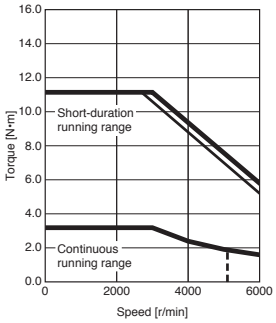

HK-KT103UW
Torque increased

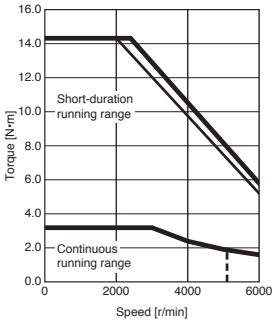

HK-KT153W
Standard torque

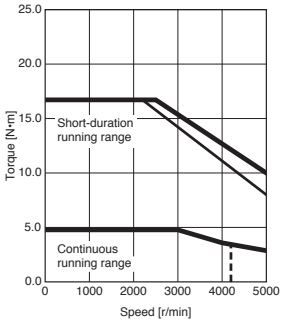

HK-KT153W
Torque increased

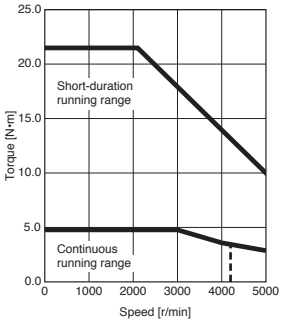

HK-KT203W
Standard torque

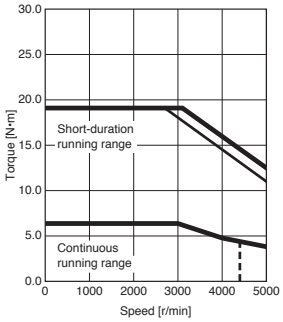

HK-KT203W
Torque increased

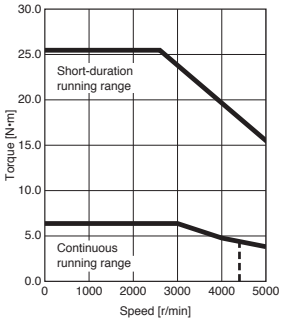

HK-KT202W
Standard torque

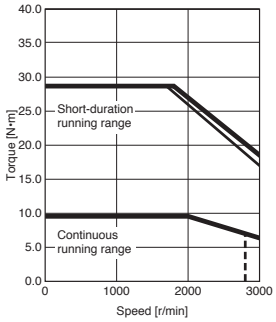

HK-KT202W
Torque increased

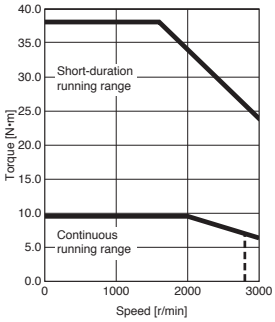

Notes: 1. Torque drops when the power supply voltage is below the specified value. - - - - : A rough indication for 3-phase 170 V AC

HK-KT_4_W Torque Characteristics (Note 1)

When connected with a 200 V servo amplifier

: For 3-phase 200 V AC
: For 1-phase 200 V AC

HK-KT434W
Standard torque

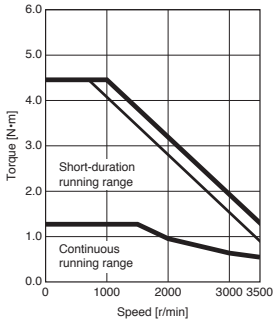

HK-KT434W
Torque increased

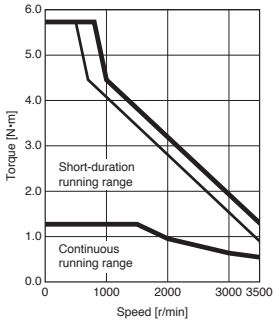

HK-KT634W
Standard torque

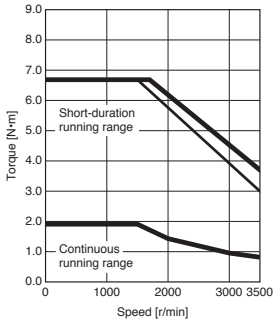

HK-KT634W
Torque increased

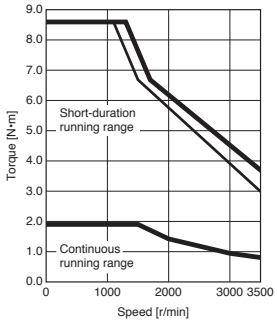

HK-KT7M34W
Standard torque

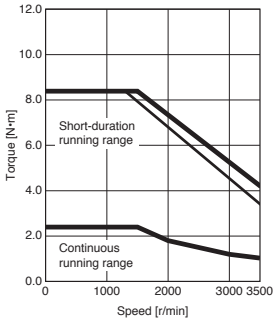

HK-KT7M34W
Torque increased

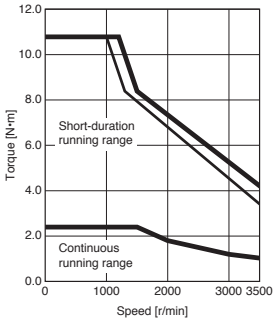

HK-KT1034W
Standard torque

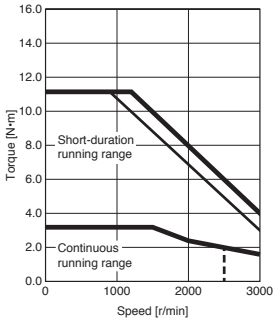

HK-KT1034W
Torque increased

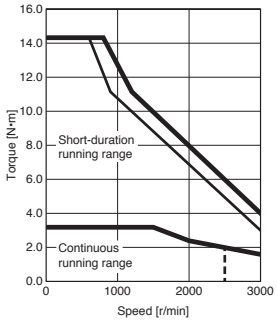

HK-KT1534W
Standard torque

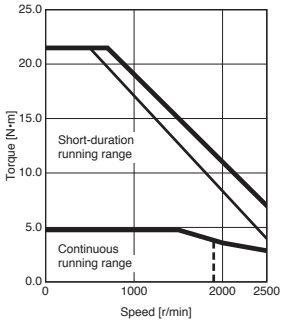

HK-KT2034W
Standard torque

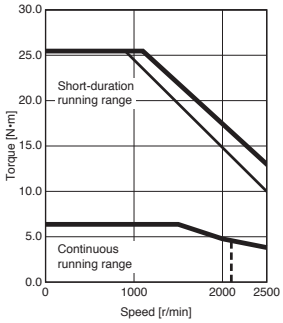

HK-KT2024W
Standard torque

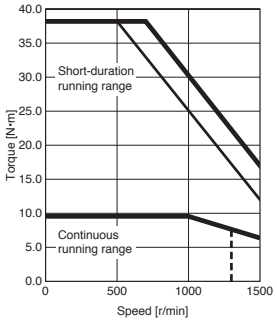

Notes: 1. Torque drops when the power supply voltage is below the specified value. - - - - : A rough indication for 3-phase 170 V AC

HK-KT Series Dimensions (Note 3, 4)

HK-KT053W(B), HK-KT13W(B), HK-KT1M3W(B)

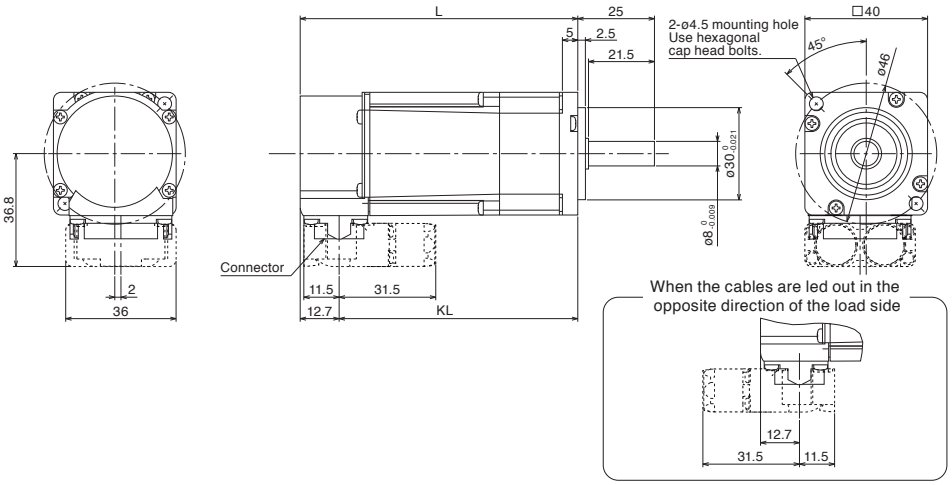

Connector

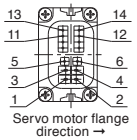

Electromagnetic brake (Note 2)

Pin No.	Signal name
5	B1
6	B2

Power supply

Pin No.	Signal name
1	⏚(PE)
2	U
3	W
4	V

Encoder

Pin No.	Signal name
11	P5
12	MR
13	LG
14	MRR

Model	Variable dimensions (Note 1)	
	L	KL
HK-KT053W(B)	55.5 (90.5)	42.8 (77.8)
HK-KT13W(B)	68 (103)	55.3 (90.3)
HK-KT1M3W(B)	80.5 (115.5)	67.8 (102.8)

[Unit: mm]

HK-KT13UW(B)

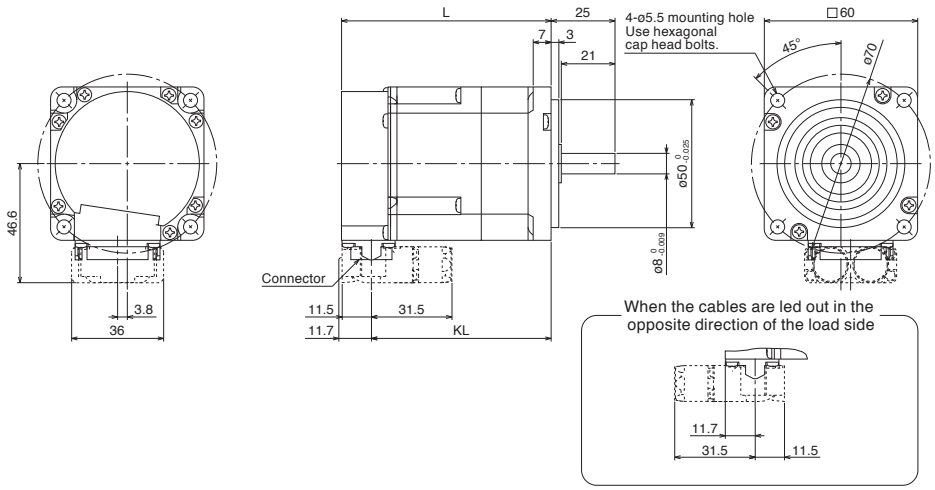

Connector

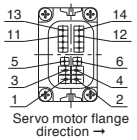

Electromagnetic brake (Note 2)

Pin No.	Signal name
5	B1
6	B2

Power supply

Pin No.	Signal name
1	⏚(PE)
2	U
3	W
4	V

Encoder

Pin No.	Signal name
11	P5
12	MR
13	LG
14	MRR

Model	Variable dimensions (Note 1)	
	L	KL
HK-KT13UW(B)	58.5 (82)	46.8 (70.3)

[Unit: mm]

HK-KT23W(B), HK-KT43W(B), HK-KT63W(B), HK-KT434W(B), HK-KT634W(B)

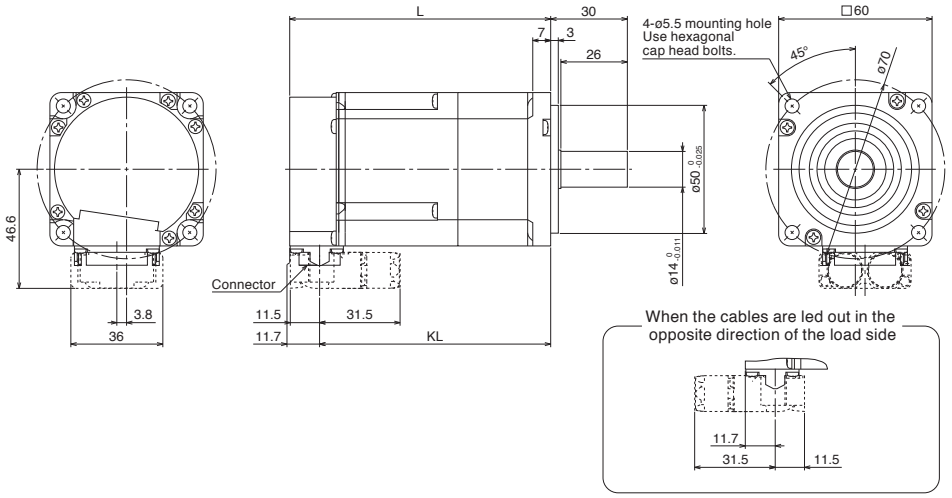

Connector

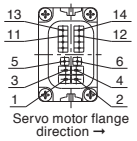

Electromagnetic brake (Note 2)

Pin No.	Signal name
5	B1
6	B2

Power supply

Pin No.	Signal name
1	⏚(PE)
2	U
3	W
4	V

Encoder

Pin No.	Signal name
11	P5
12	MR
13	LG
14	MRR

Model	Variable dimensions (Note 1)	
	L	KL
HK-KT23W(B)	67.5 (102.1)	55.8 (90.4)
HK-KT43W(B) HK-KT434W(B)	85.5 (120.1)	73.8 (108.4)
HK-KT63W(B) HK-KT634W(B)	103.5 (138.1)	91.8 (126.4)

[Unit: mm]

Notes: 1. Dimensions in brackets are for the models with an electromagnetic brake.
2. The electromagnetic brake terminals (B1, B2) do not have polarity.
3. Dimensions are the same regardless of whether or not an oil seal is installed.
4. Use a friction coupling to fasten a load.

HK-KT Series Dimensions (Note 3, 4)

HK-KT23UW(B), HK-KT43UW(B)

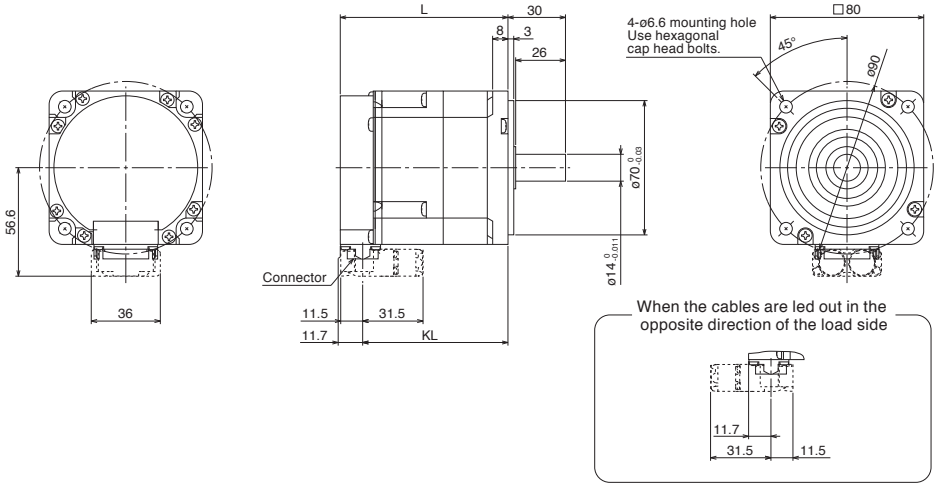

Connector

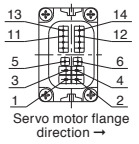

Electromagnetic brake (Note 2)

Pin No.	Signal name
5	B1
6	B2

Power supply

Pin No.	Signal name
1	⏚(PE)
2	U
3	W
4	V

Encoder

Pin No.	Signal name
11	P5
12	MR
13	LG
14	MRR

Model	Variable dimensions (Note 1)	
	L	KL
HK-KT23UW(B)	65.5 (87.5)	53.8 (75.8)
HK-KT43UW(B)	74.5 (96.5)	62.8 (84.8)

[Unit: mm]

HK-KT7M3W(B), HK-KT103W(B), HK-KT7M34W(B), HK-KT1034W(B)

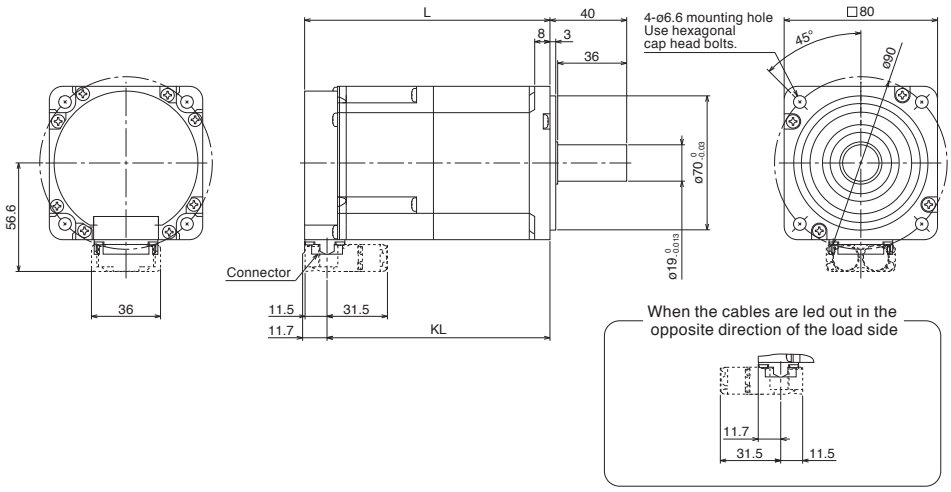

Connector

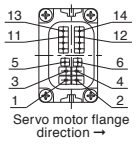

Electromagnetic brake (Note 2)

Pin No.	Signal name
5	B1
6	B2

Power supply

Pin No.	Signal name
1	⏚(PE)
2	U
3	W
4	V

Encoder

Pin No.	Signal name
11	P5
12	MR
13	LG
14	MRR

Model	Variable dimensions (Note 1)	
	L	KL
HK-KT7M3W(B) HK-KT7M34W(B)	92.5 (128)	80.8 (116.3)
HK-KT103W(B) HK-KT1034W(B)	101.5 (137)	89.8 (125.3)

[Unit: mm]

HK-KT7M3UW(B), HK-KT103UW(B), HK-KT153W(B), HK-KT203W(B), HK-KT202W(B), HK-KT1534W(B), HK-KT2034W(B), HK-KT2024W(B)

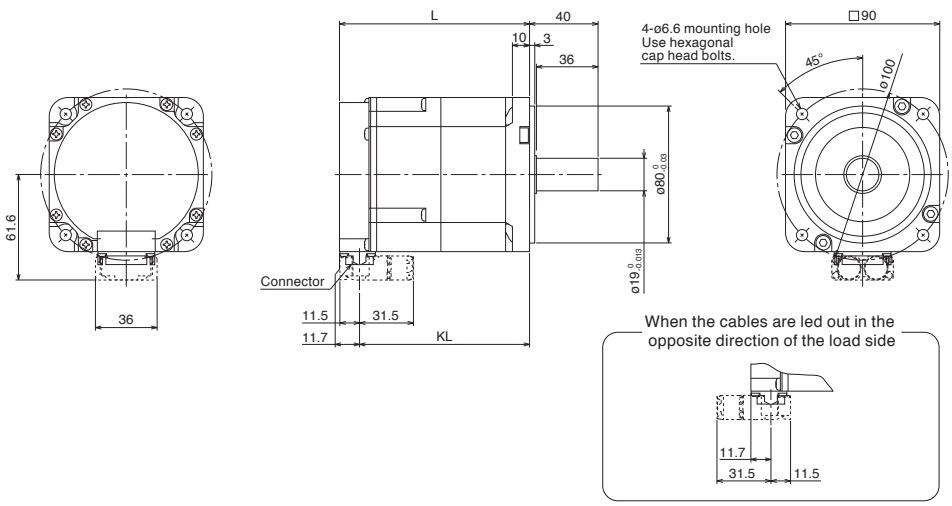

Connector

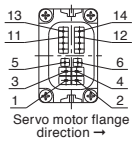

Electromagnetic brake (Note 2)

Pin No.	Signal name
5	B1
6	B2

Power supply

Pin No.	Signal name
1	⏚(PE)
2	U
3	W
4	V

Encoder

Pin No.	Signal name
11	P5
12	MR
13	LG
14	MRR

Model	Variable dimensions (Note 1)	
	L	KL
HK-KT7M3UW(B)	83.5 (111)	71.8 (99.3)
HK-KT103UW(B)	92.5 (120)	80.8 (108.3)
HK-KT153W(B) HK-KT1534W(B)	118.9 (158.3)	107.2 (146.6)
HK-KT203W(B) HK-KT2034W(B)	136.9 (176.3)	125.2 (164.6)
HK-KT202W(B) HK-KT2024W(B)	172.9 (212.3)	161.2 (200.6)

[Unit: mm]

Notes: 1. Dimensions in brackets are for the models with an electromagnetic brake.
2. The electromagnetic brake terminals (B1, B2) do not have polarity.
3. Dimensions are the same regardless of whether or not an oil seal is installed.
4. Use a friction coupling to fasten a load.

HK-KT Series with Special Shaft Dimensions

Servo motors with the following specifications are also available.

D: D-cut shaft (Note 1)

Model	Variable dimensions	
	Q1	Q2
HK-KT053WD HK-KT13WD HK-KT1M3WD	21.5	20.5
HK-KT13UWD	21	20

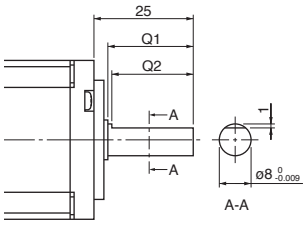

[Unit: mm]

K: Key shaft (with a double round-ended key) (Note 1)

Model	Variable dimensions								
	S	R	Q	W	QK	QL	U	T	Y
HK-KT053WK HK-KT13WK HK-KT1M3WK	8 0 -0.009	25	21.5	3	14	5	1.8	3	M3 Screw depth: 8
HK-KT13UWK			21						
HK-KT23WK HK-KT43(4)WK HK-KT63(4)WK HK-KT23UWK HK-KT43UWK	14 0 -0.011	30	26	5	20	3	3	5	M4 Screw depth: 15
HK-KT7M3(4)WK HK-KT103(4)WK HK-KT7M3UWK HK-KT103UWK HK-KT153(4)WK HK-KT203(4)WK HK-KT202(4)WK	19 0 -0.013	40	36	6	25	5	3.5	6	M5 Screw depth: 20

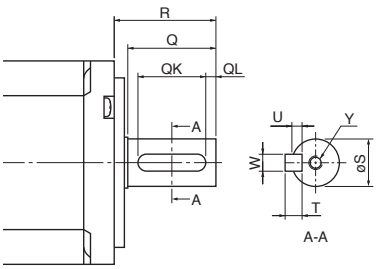

[Unit: mm]

N: Key shaft (without key) (Note 1, 2)

Model	Variable dimensions								
	S	R	Q	W	QK	QL	U	r	Y
HK-KT053WN HK-KT13WN HK-KT1M3WN	8 0 -0.009	25	21.5	3 -0.004 -0.029	14	5	1.8 +0.1 0	1.5	M3 Screw depth: 8
HK-KT13UWN			21						
HK-KT23WN HK-KT43(4)WN HK-KT63(4)WN HK-KT23UWN HK-KT43UWN	14 0 -0.011	30	26	5 0 -0.03	20	3	3 +0.1 0	2.5	M4 Screw depth: 15
HK-KT7M3(4)WN HK-KT103(4)WN HK-KT7M3UWN HK-KT103UWN HK-KT153(4)WN HK-KT203(4)WN HK-KT202(4)WN	19 0 -0.013	40	36	6 0 -0.03	25	5	3.5 +0.1 0	3	M5 Screw depth: 20

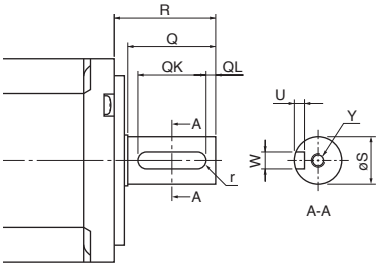

[Unit: mm]

Notes: 1. Do not use a servo motor with a D-cut shaft or a key shaft for frequent start/stop applications as this may cause the damage to the shaft.
2. The servo motor is supplied without a key. The user needs to prepare a key.

HK-ST_W (Medium Inertia, Medium Capacity)

Specifications when connected with a 200 V servo amplifier

Flange size		[mm]	130 × 130					176 × 176	
Rotary servo motor model		HK-ST	52W	102W	172W	202AW	302W	202W	352W
Continuous running duty (Note 4)	Rated output	[kW]	0.5	1.0	1.75	2.0	3.0	2.0	3.5
	Rated torque (Note 3, 5)	[N•m]	2.4 (3.2)	4.8 (6.4)	8.4	9.5 (11.6)	14.3	9.5 (12.7)	16.7
Maximum torque (Note 3)		[N•m]	7.2 (12.7)	14.3 (19.1)	25.1	28.6 (34.7)	43.0	28.6 (38.2)	50.1
Rated speed (Note 3, 4)		[r/min]	2000 (1500)	2000 (1500)	2000	2000 (1650)	2000	2000 (1500)	2000
Maximum speed (Note 4)		[r/min]	4000				2500	4000	3500
Power rate at continuous rated torque (Note 3)	Standard	[kW/s]	9.7 (17.2)	26.3 (46.8)	61.2	53.9 (79.2)	91.5	25.1 (44.6)	52.1
	With electromagnetic brake	[kW/s]	7.0 (12.4)	20.9 (37.2)	51.1	47.8 (70.3)	83.6	22.0 (39.2)	47.7
Rated current (Note 3)		[A]	3.0 (4.0)	5.3 (7.0)	9.3	11 (13)	11	10 (14)	16
Maximum current (Note 3)		[A]	11 (19)	18 (24)	32	34 (42)	34	32 (45)	52
Moment of inertia J	Standard	[× 10^{-4} kg•m^2]	5.90	8.65	11.4	16.9	22.4	36.4	53.6
	With electromagnetic brake	[× 10^{-4} kg•m^2]	8.15	10.9	13.7	19.1	24.5	41.4	58.6
Recommended load to motor inertia ratio (Note 1)			15 times or less (Note 6)	23 times or less	24 times or less			15 times or less (Note 7)	12 times or less (Note 8)
Speed/position detector			Batteryless absolute/incremental 26-bit encoder (resolution: 67,108,864 pulses/rev)						
Oil seal			None (Servo motors with an oil seal are available. (HK-ST_J))						
Electromagnetic brake			None (Servo motors with an electromagnetic brake are available. (HK-ST_B))						
Thermistor			None						
Insulation class			155 (F)						
Structure			Totally enclosed, natural cooling (IP rating: IP67) (Note 2)						
Vibration resistance *1			X: 24.5 m/s^2 Y: 49 m/s^2						
Vibration rank			V10 *3						
Permissible load for the shaft *2	L	[mm]	55					79	
	Radial	[N]	980					2058	
	Thrust	[N]	490					980	
Mass	Standard	[kg]	4.3	5.2	6.2	8.0	9.8	12	15
	With electromagnetic brake	[kg]	6.0	6.9	7.8	10	12	17	20

Notes: 1. Contact your local sales office if the load to motor inertia ratio exceeds the value in the table.
2. The shaft-through portion is excluded. Refer to asterisk 4 of "Annotations for Rotary Servo Motor Specifications" on p. 4-20 in this catalog for the shaft-through portion.
3. The value in brackets is applicable when the torque is increased with a combination with a larger-capacity servo amplifier. Refer to "Combinations of Rotary Servo Motors and Servo Amplifiers" in this catalog for the available combinations.
4. The continuous running duty and the speed are not guaranteed when the power supply voltage is dropped.
5. When unbalanced torque is generated, such as in a vertical lift machine, keep the unbalanced torque of the machine under 70 % of the servo motor rated torque.
6. 19 times or less for 3000 r/min or less.
7. 20 times or less for 3000 r/min or less.
8. 22 times or less for 3000 r/min or less.

Refer to "Annotations for Rotary Servo Motor Specifications" on p. 4-20 in this catalog for details about asterisks 1 to 3.

Electromagnetic brake specifications (Note 1)

Model		HK-ST	52WB	102WB	172WB	202AWB	302WB	202WB	352WB
Type			Spring actuated type safety brake						
Rated voltage			24 V DC $^{0}_{-10}$%						
Power consumption		[W] at 20 °C	20			23		34	
Electromagnetic brake static friction torque		[N•m]	8.5 or higher			16 or higher		44 or higher	
Permissible braking work	Per braking	[J]	400			400		4500	
	Per hour	[J]	4000			4000		45000	
Electromagnetic brake life (Note 2)	Number of braking times		20000			5000		20000	
	Work per braking	[J]	200			400		1000	

Notes: 1. The electromagnetic brake is for holding. It cannot be used for deceleration applications.
2. Brake gap is not adjustable. Electromagnetic brake life is defined as the time period until readjustment is needed.

HK-ST_4_W (Medium Inertia, Medium Capacity)

Specifications when connected with a 200 V servo amplifier

Flange size		[mm]	130 × 130					176 × 176		
Rotary servo motor model		HK-ST	524W	1024W	1724W	2024AW	3024W	2024W	3524W	5024W
Continuous running duty (Note 4)	Rated output	[kW]	0.3	0.6	0.85	1.0	1.5	1.2	2.0	3.0
	Rated torque (Note 5)	[N•m]	2.9	5.7	8.1	9.5	14.3	11.5	19.1	28.6
Maximum torque (Note 3)		[N•m]	11.5	17.2 (20.1)	24.4	33.4	43.0	40.1	57.3 (66.8)	85.9
Rated speed (Note 4)		[r/min]	1000							
Maximum speed (Note 4)		[r/min]	2000				1200	2000	1500	2000
Power rate at continuous rated torque	Standard	[kW/s]	13.9	37.9	57.8	53.9	91.5	36.1	68.0	116
	With electromagnetic brake	[kW/s]	10.1	30.1	48.3	47.8	83.6	31.7	62.3	108
Rated current		[A]	1.8	3.2	4.5	5.2	5.1	6.0	9.0	16
Maximum current (Note 3)		[A]	8.3	11 (13)	17	20	17	24	32 (37)	52
Moment of inertia J	Standard	[× 10^{-4} kg•m^2]	5.90	8.65	11.4	16.9	22.4	36.4	53.6	70.8
	With electromagnetic brake	[× 10^{-4} kg•m^2]	8.15	10.9	13.7	19.1	24.5	41.4	58.6	75.8
Recommended load to motor inertia ratio (Note 1)			15 times or less	24 times or less		20 times or less	24 times or less	23 times or less		
Speed/position detector			Batteryless absolute/incremental 26-bit encoder (resolution: 67,108,864 pulses/rev)							
Oil seal			None (Servo motors with an oil seal are available. (HK-ST_J))							
Electromagnetic brake			None (Servo motors with an electromagnetic brake are available. (HK-ST_B))							
Thermistor			None							
Insulation class			155 (F)							
Structure			Totally enclosed, natural cooling (IP rating: IP67) (Note 2)							
Vibration resistance *1			X: 24.5 m/s^2 Y: 49 m/s^2							X: 24.5 m/s^2 Y: 29.4 m/s^2
Vibration rank			V10 *3							
Permissible load for the shaft *2	L	[mm]	55					79		
	Radial	[N]	980					2058		
	Thrust	[N]	490					980		
Mass	Standard	[kg]	4.3	5.2	6.2	8.0	9.8	12	15	18
	With electromagnetic brake	[kg]	6.0	6.9	7.8	10	12	17	20	23

Notes: 1. Contact your local sales office if the load to motor inertia ratio exceeds the value in the table.
2. The shaft-through portion is excluded. Refer to asterisk 4 of "Annotations for Rotary Servo Motor Specifications" on p. 4-20 in this catalog for the shaft-through portion.
3. The value in brackets is applicable when the torque is increased with a combination with a larger-capacity servo amplifier. Refer to "Combinations of Rotary Servo Motors and Servo Amplifiers" in this catalog for the available combinations.
4. The continuous running duty and the speed are not guaranteed when the power supply voltage is dropped.
5. When unbalanced torque is generated, such as in a vertical lift machine, keep the unbalanced torque of the machine under 70 % of the servo motor rated torque.

Refer to "Annotations for Rotary Servo Motor Specifications" on p. 4-20 in this catalog for details about asterisks 1 to 3.

Electromagnetic brake specifications (Note 1)

Model		HK-ST	524WB	1024WB	1724WB	2024AWB	3024WB	2024WB	3524WB	5024WB
Type			Spring actuated type safety brake							
Rated voltage			24 V DC $^{0}_{-10}$%							
Power consumption		[W] at 20 °C	20			23		34		
Electromagnetic brake static friction torque		[N•m]	8.5 or higher			16 or higher		44 or higher		
Permissible braking work	Per braking	[J]	400			400		4500		
	Per hour	[J]	4000			4000		45000		
Electromagnetic brake life (Note 2)	Number of braking times		20000			5000		20000		
	Work per braking	[J]	200			400		1000		

Notes: 1. The electromagnetic brake is for holding. It cannot be used for deceleration applications.
2. Brake gap is not adjustable. Electromagnetic brake life is defined as the time period until readjustment is needed.

HK-ST_W Torque Characteristics (Note 1)

When connected with a 200 V servo amplifier

: For 3-phase 200 V AC
: For 1-phase 200 V AC

HK-ST52W
Standard torque

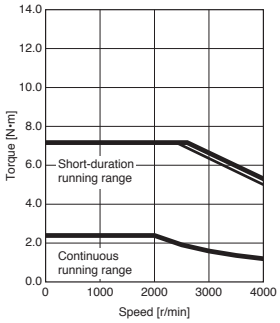

HK-ST52W
Torque increased

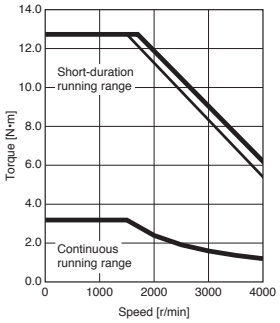

HK-ST102W
Standard torque

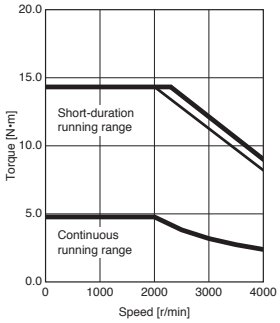

HK-ST102W
Torque increased

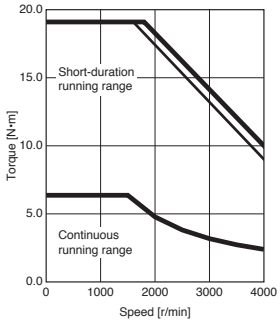

HK-ST172W
Standard torque

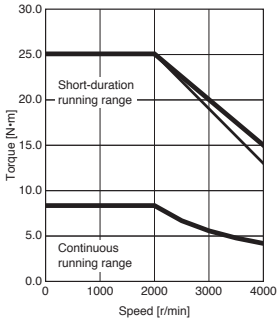

HK-ST202AW
Standard torque

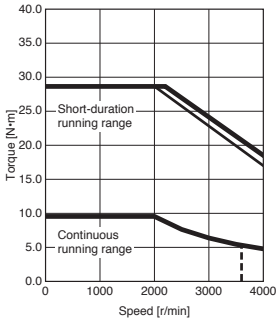

HK-ST202AW
Torque increased

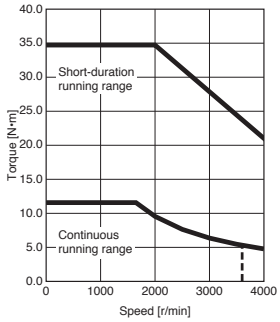

HK-ST302W
Standard torque

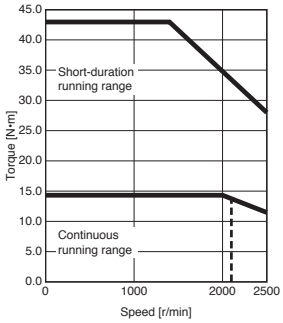

HK-ST202W
Standard torque

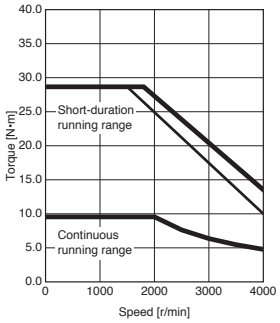

HK-ST202W
Torque increased

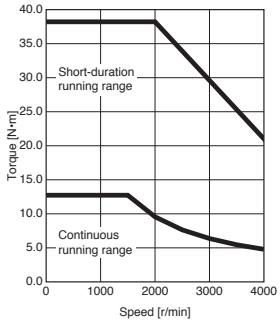

HK-ST352W
Standard torque

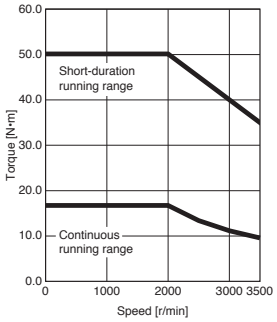

Notes: 1. Torque drops when the power supply voltage is below the specified value. - - - - : A rough indication for 3-phase 170 V AC

HK-ST_4_W Torque Characteristics (Note 1)

When connected with a 200 V servo amplifier

: For 3-phase 200 V AC
: For 1-phase 200 V AC

HK-ST524W
Standard torque

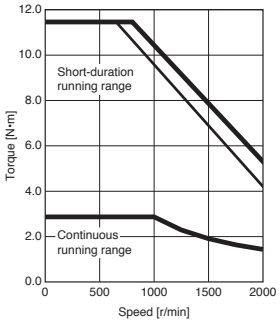

HK-ST1024W
Standard torque

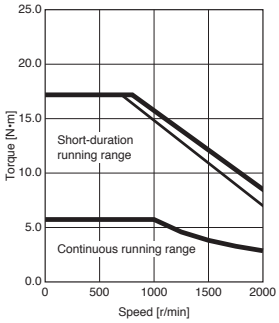

HK-ST1024W
Torque increased

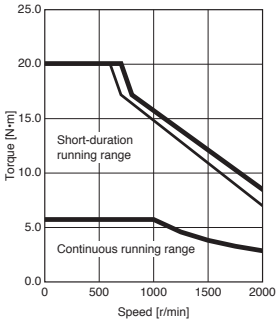

HK-ST1724W
Standard torque

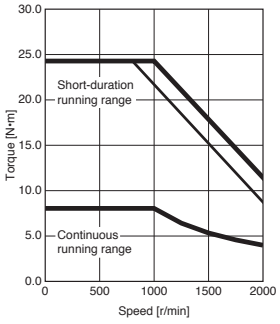

HK-ST2024AW
Standard torque

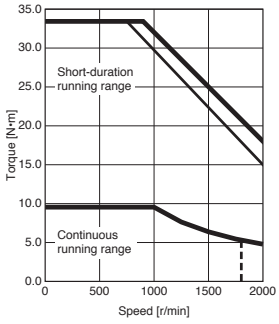

HK-ST3024W
Standard torque

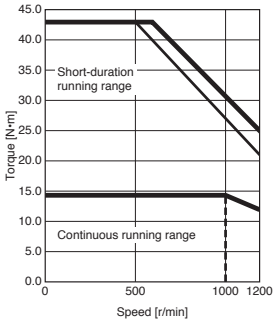

HK-ST2024W
Standard torque

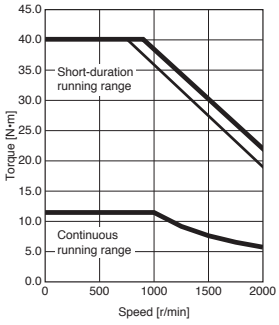

HK-ST3524W
Standard torque

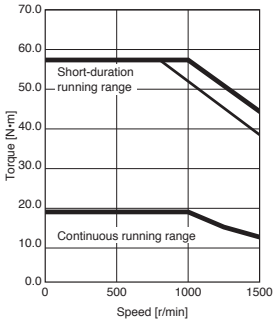

HK-ST3524W
Torque increased

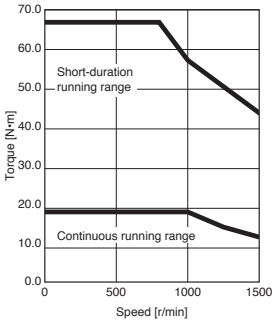

HK-ST5024W
Standard torque

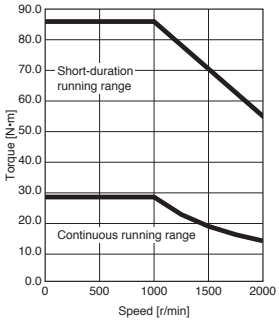

Notes: 1. Torque drops when the power supply voltage is below the specified value. - - - - : A rough indication for 3-phase 170 V AC

HK-ST Series Dimensions (Note 3, 4)

HK-ST52W(B), HK-ST102W(B), HK-ST172W(B), HK-ST202AW(B), HK-ST302W(B),
HK-ST524W(B), HK-ST1024W(B), HK-ST1724W(B), HK-ST2024AW(B), HK-ST3024W(B)

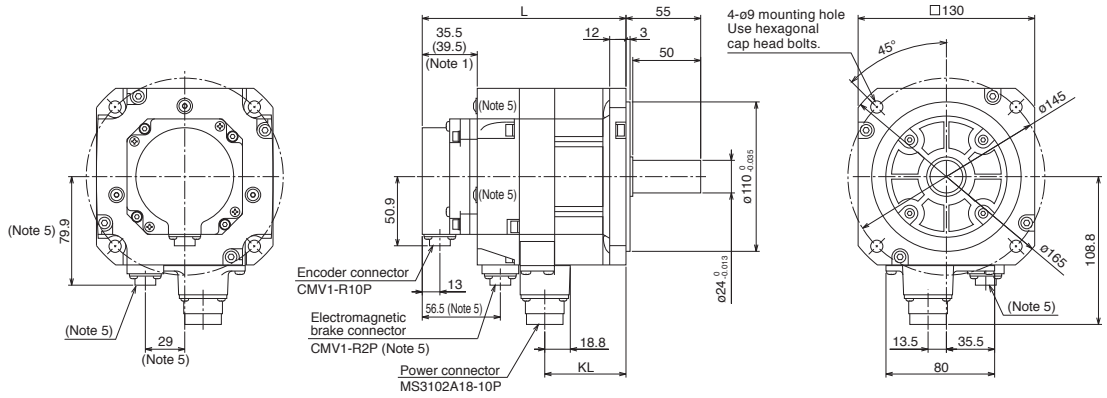

Encoder

Pin No.	Signal name	Pin No.	Signal name
1	MR	6	-
2	MRR	7	-
3	-	8	P5
4	-	9	-
5	LG	10	SHD

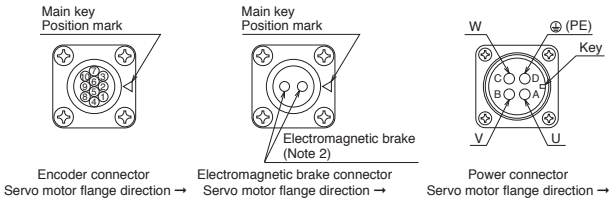

Model	Variable dimensions (Note 1)	
	L	KL
HK-ST52W(B) HK-ST524W(B)	115.5 (150)	59.8
HK-ST102W(B) HK-ST1024W(B)	126.5 (161)	70.8
HK-ST172W(B) HK-ST1724W(B)	137.5 (172)	81.8
HK-ST202AW(B) HK-ST2024AW(B)	159.5 (194)	103.8
HK-ST302W(B) HK-ST3024W(B)	181.5 (216)	125.8

[Unit: mm]

HK-ST202W(B), HK-ST352W(B),
HK-ST2024W(B), HK-ST3524W(B), HK-ST5024W(B)

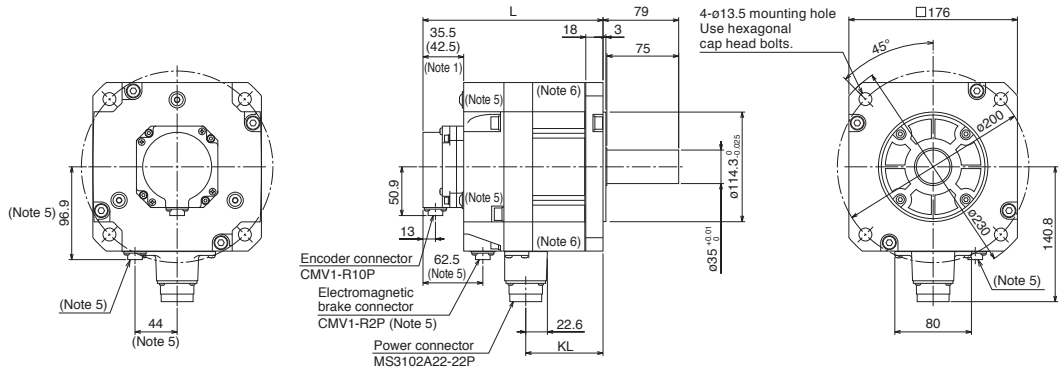

Encoder

Pin No.	Signal name	Pin No.	Signal name
1	MR	6	-
2	MRR	7	-
3	-	8	P5
4	-	9	-
5	LG	10	SHD

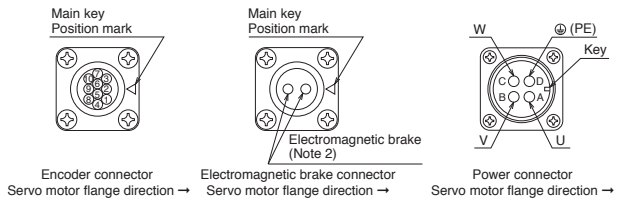

Model	Variable dimensions (Note 1)	
	L	KL
HK-ST202W(B) HK-ST2024W(B)	138.5 (188)	80.7
HK-ST352W(B) HK-ST3524W(B)	158.5 (208)	100.7
HK-ST5024W(B)	178.5 (228)	120.7

[Unit: mm]

Notes: 1. Dimensions in brackets are for the models with an electromagnetic brake.
2. The electromagnetic brake terminals do not have polarity.
3. Dimensions are the same regardless of whether or not an oil seal is installed.
4. Use a friction coupling to fasten a load.
5. Only for the models with an electromagnetic brake.
6. HK-ST352W(B), HK-ST3524W(B), and HK-ST5024W(B) have screw holes (M8) for eyebolts.

HK-ST Series with Special Shaft Dimensions

Servo motors with the following specifications are also available.

K: Key shaft (with a double round-ended key) (Note 1)

Model	Variable dimensions								
	S	R	Q	W	QK	QL	U	T	Y
HK-ST52(4)WK HK-ST102(4)WK HK-ST172(4)WK HK-ST202(4)AWK HK-ST302(4)WK	$24^{0}_{-0.013}$	55	50	8	36	5	4	7	M8 Screw depth: 20
HK-ST202(4)WK HK-ST352(4)WK ST5024WK	$35^{0.010}_{0}$	79	75	10	55	5	5	8	M8 Screw depth: 20

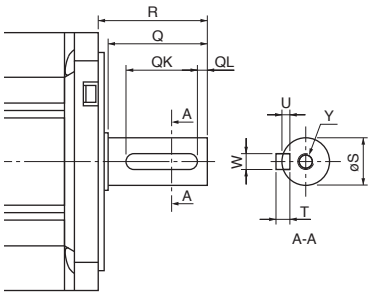

[Unit: mm]

N: Key shaft (without key) (Note 1, 2)

Model	Variable dimensions								
	S	R	Q	W	QK	QL	U	r	Y
HK-ST52(4)WN HK-ST102(4)WN HK-ST172(4)WN HK-ST202(4)AWN HK-ST302(4)WN	$24^{0}_{-0.013}$	55	50	$8^{0}_{-0.036}$	36	5	$4^{+0.2}_{0}$	4	M8 Screw depth: 20
HK-ST202(4)WN HK-ST352(4)WN ST5024WN	$35^{0.010}_{0}$	79	75	$10^{0}_{-0.036}$	55	5	$5^{+0.2}_{0}$	5	M8 Screw depth: 20

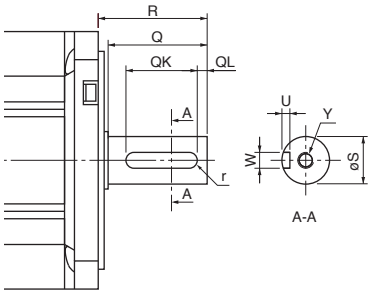

[Unit: mm]

Notes: 1. Do not use a servo motor with a key shaft for frequent start/stop applications as this may cause the damage to the shaft.
2. The servo motor is supplied without a key. The user needs to prepare a key.

Power Supply Capacity

1-axis servo amplifiers

Rotary servo motor		Servo amplifier	Power supply capacity [kVA] (Note 1)
HK-KT_W	HK-KT053W	MR-J5-10G/A	0.3
		MR-J5-20G/A	0.3
		MR-J5-40G/A	0.3
	HK-KT13W	MR-J5-10G/A	0.3
		MR-J5-20G/A	0.3
		MR-J5-40G/A	0.3
	HK-KT1M3W	MR-J5-20G/A	0.5
		MR-J5-40G/A	0.5
		MR-J5-60G/A	0.5
	HK-KT13UW	MR-J5-10G/A	0.3
		MR-J5-20G/A	0.3
		MR-J5-40G/A	0.3
	HK-KT23W	MR-J5-20G/A	0.5
		MR-J5-40G/A	0.5
		MR-J5-60G/A	0.5
	HK-KT43W	MR-J5-40G/A	0.9
		MR-J5-60G/A	0.9
		MR-J5-70G/A	0.9
	HK-KT63W	MR-J5-70G/A	1.3
		MR-J5-100G/A	1.3
		MR-J5-200G/A	1.3
	HK-KT23UW	MR-J5-20G/A	0.5
		MR-J5-40G/A	0.5
		MR-J5-60G/A	0.5
	HK-KT43UW	MR-J5-40G/A	0.8
		MR-J5-60G/A	0.8
		MR-J5-70G/A	0.8
	HK-KT7M3W	MR-J5-70G/A	1.3
		MR-J5-100G/A	1.3
		MR-J5-200G/A	1.3
	HK-KT103W	MR-J5-100G/A	1.9
		MR-J5-200G/A	1.9
		MR-J5-350G/A	2.0
	HK-KT7M3UW	MR-J5-70G/A	1.3
		MR-J5-100G/A	1.3
		MR-J5-200G/A	1.3
	HK-KT103UW	MR-J5-100G/A	1.8
		MR-J5-200G/A	1.8
		MR-J5-350G/A	1.8
	HK-KT153W	MR-J5-200G/A	2.6
		MR-J5-350G/A	2.8
	HK-KT203W	MR-J5-200G/A	3.2
		MR-J5-350G/A	3.6
	HK-KT202W	MR-J5-200G/A	3.3
		MR-J5-350G/A	3.6

Rotary servo motor		Servo amplifier	Power supply capacity [kVA] (Note 1)
HK-KT_4_W	HK-KT434W	MR-J5-20G/A	0.6
		MR-J5-40G/A	0.6
		MR-J5-60G/A	0.6
	HK-KT634W	MR-J5-40G/A	0.8
		MR-J5-60G/A	0.8
		MR-J5-70G/A	0.8
	HK-KT7M34W	MR-J5-40G/A	0.9
		MR-J5-60G/A	0.9
		MR-J5-70G/A	0.9
	HK-KT1034W	MR-J5-60G/A	1.1
		MR-J5-70G/A	1.1
		MR-J5-100G/A	1.1
	HK-KT1534W	MR-J5-70G/A	1.5
		MR-J5-100G/A	1.5
		MR-J5-200G/A	1.5
	HK-KT2034W	MR-J5-100G/A	1.9
		MR-J5-200G/A	1.9
		MR-J5-350G/A	2.0
	HK-KT2024W	MR-J5-100G/A	1.9
		MR-J5-200G/A	1.9
		MR-J5-350G/A	2.1
HK-ST_W	HK-ST52W	MR-J5-60G/A	1.0
		MR-J5-70G/A	1.0
		MR-J5-100G/A	1.0
	HK-ST102W	MR-J5-100G/A	1.7
		MR-J5-200G/A	1.7
		MR-J5-350G/A	1.8
	HK-ST172W	MR-J5-200G/A	3.0
		MR-J5-350G/A	3.2
	HK-ST202AW	MR-J5-200G/A	3.5
		MR-J5-350G/A	3.5
	HK-ST302W	MR-J5-350G/A	4.9
	HK-ST202W	MR-J5-200G/A	3.5
		MR-J5-350G/A	3.5
	HK-ST352W	MR-J5-350G/A	5.5
HK-ST_4_W	HK-ST524W	MR-J5-40G/A	0.7
		MR-J5-60G/A	0.7
		MR-J5-70G/A	0.7
	HK-ST1024W	MR-J5-60G/A	1.3
		MR-J5-70G/A	1.3
		MR-J5-100G/A	1.3
	HK-ST1724W	MR-J5-100G/A	1.7
		MR-J5-200G/A	1.7
		MR-J5-350G/A	1.8
	HK-ST2024AW	MR-J5-100G/A	1.9
		MR-J5-200G/A	1.9
		MR-J5-350G/A	2.0
	HK-ST3024W	MR-J5-200G/A	2.6
		MR-J5-350G/A	2.8
	HK-ST2024W	MR-J5-200G/A	2.1
		MR-J5-350G/A	2.2
	HK-ST3524W	MR-J5-200G/A	3.2
		MR-J5-350G/A	3.5
	HK-ST5024W	MR-J5-350G/A	4.9

Notes: 1. The power supply capacity varies depending on the power supply impedance.

Power Supply Capacity

Multi-axis servo amplifiers

Rotary servo motor		Servo amplifier	Power supply capacity [kVA] (Note 1, 2)
HK-KT_W	HK-KT053W	MR-J5W2-22G	0.3
		MR-J5W2-44G	0.3
		MR-J5W3-222G	0.3
		MR-J5W3-444G	0.3
	HK-KT13W	MR-J5W2-22G	0.3
		MR-J5W2-44G	0.3
		MR-J5W3-222G	0.3
		MR-J5W3-444G	0.3
	HK-KT1M3W	MR-J5W2-22G	0.5
		MR-J5W2-44G	0.5
		MR-J5W3-222G	0.5
		MR-J5W3-444G	0.5
	HK-KT13UW	MR-J5W2-22G	0.3
		MR-J5W2-44G	0.3
		MR-J5W3-222G	0.3
		MR-J5W3-444G	0.3
	HK-KT23W	MR-J5W2-22G	0.5
		MR-J5W2-44G	0.5
		MR-J5W3-222G	0.5
		MR-J5W3-444G	0.5
	HK-KT43W	MR-J5W2-44G	0.9
		MR-J5W2-77G	0.9
		MR-J5W2-1010G	0.9
		MR-J5W3-444G	0.9
	HK-KT63W	MR-J5W2-77G	1.3
		MR-J5W2-1010G	1.3
	HK-KT23UW	MR-J5W2-22G	0.5
		MR-J5W2-44G	0.5
		MR-J5W3-222G	0.5
		MR-J5W3-444G	0.5
	HK-KT43UW	MR-J5W2-44G	0.8
		MR-J5W2-77G	0.8
		MR-J5W2-1010G	0.8
		MR-J5W3-444G	0.8
	HK-KT7M3W	MR-J5W2-77G	1.3
		MR-J5W2-1010G	1.3
	HK-KT103W	MR-J5W2-1010G	1.9
	HK-KT7M3UW	MR-J5W2-77G	1.3
		MR-J5W2-1010G	1.3
	HK-KT103UW	MR-J5W2-1010G	1.3

Rotary servo motor		Servo amplifier	Power supply capacity [kVA] (Note 1, 2)
HK-KT_4_W	HK-KT434W	MR-J5W2-22G	0.6
		MR-J5W2-44G	0.6
		MR-J5W3-222G	0.6
		MR-J5W3-444G	0.6
	HK-KT634W	MR-J5W2-44G	0.8
		MR-J5W2-77G	0.8
		MR-J5W2-1010G	0.8
		MR-J5W3-444G	0.8
	HK-KT7M34W	MR-J5W2-44G	0.9
		MR-J5W2-77G	0.9
		MR-J5W2-1010G	0.9
		MR-J5W3-444G	0.9
	HK-KT1034W	MR-J5W2-77G	1.1
		MR-J5W2-1010G	1.1
	HK-KT1534W	MR-J5W2-77G	1.5
		MR-J5W2-1010G	1.5
	HK-KT2034W	MR-J5W2-1010G	1.9
	HK-KT2024W	MR-J5W2-1010G	1.9
HK-ST_W	HK-ST52W	MR-J5W2-77G	1.0
		MR-J5W2-1010G	1.0
	HK-ST102W	MR-J5W2-1010G	1.7
HK-ST_4_W	HK-ST524W	MR-J5W2-44G	0.7
		MR-J5W2-77G	0.7
		MR-J5W3-444G	0.7
	HK-ST1024W	MR-J5W2-77G	1.3
		MR-J5W2-1010G	1.3
	HK-ST1724W	MR-J5W2-1010G	1.7
	HK-ST2024AW	MR-J5W2-1010G	1.9

Notes: 1. The power supply capacity varies depending on the power supply impedance.
2. The listed values are the power supply capacity for one servo motor. For the multi-axis servo amplifiers, calculate the power supply capacity with the equation below:
Power supply capacity [kVA] = Sum of power supply capacity [kVA] of the connected servo motors

Annotations for Rotary Servo Motor Specifications

*1. The vibration direction is shown in the diagram below. The numerical value indicates the maximum value of the component (commonly the bracket in the opposite direction of the load side).
Fretting tends to occur on the bearing when the servo motor stops. Thus, maintain vibration level at approximately one-half of the allowable value.

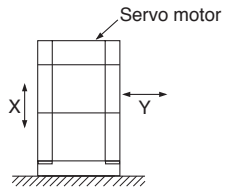

*2. Refer to the diagram below for the permissible load for the shaft. Ensure that loads applied on the shaft do not exceed the values specified in the table. The values in the table are applicable when each load is applied singly.

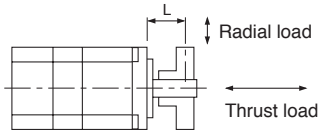

L: Distance between the flange mounting surface and the center of load

*3. V10 indicates that the amplitude of the servo motor itself is 10 µm or less. The following shows mounting orientation and measuring position of the servo motor during the measurement:

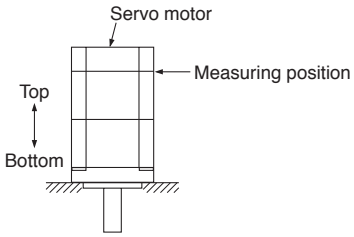

*4. Refer to the diagram below for the shaft-through portion.

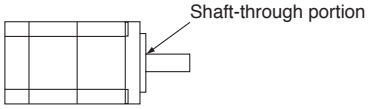

5 Linear Servo Motors

Model Designation 5-2

Specifications
LM-H3 series 5-6
LM-F series 5-8
LM-K2 series 5-10
LM-U2 series 5-12

Power Supply Capacity 5-14

Dimensions
LM-H3 series 5-16
LM-F series 5-18
LM-K2 series 5-20
LM-U2 series 5-22

List of Linear Encoders 5-24

* Refer to p. 7-55 in this catalog for conversion of units.
* MR-J5-G-RJ and MR-J5-A-RJ are planned for a future release.

Model Designation (Note 1)

●LM-H3 series

L M - H 3 P 2 A - 0 7 P - □ (Primary side: coil)

Symbol	Linear servo motor model
BSS0	LM-H3P2A-07P
CSS0	LM-H3P3A-12P
	LM-H3P3B-24P
	LM-H3P3C-36P
	LM-H3P3D-48P
ASS0	LM-H3P7A-24P
	LM-H3P7B-48P
	LM-H3P7C-72P
	LM-H3P7D-96P

Symbol	Maximum speed [m/s]
P	3.0

Symbol	Continuous thrust [N]
07	70
12	120
24	240
36	360
48	480
72	720
96	960

Symbol	Length (nominal) [mm]
A	128
B	224
C	320
D	416

Symbol	Width (nominal) [mm]
2	50
3	65
7	100

Primary side (coil)

L M - H 3 S 2 0 - 2 8 8 - □ (Secondary side: magnet)

Symbol	Linear servo motor model
BSS0	LM-H3S20-288
	LM-H3S20-384
	LM-H3S20-480
	LM-H3S20-768
CSS0	LM-H3S30-288
	LM-H3S30-384
	LM-H3S30-480
	LM-H3S30-768
ASS0	LM-H3S70-288
	LM-H3S70-384
	LM-H3S70-480
	LM-H3S70-768

Symbol	Length (nominal) [mm]
288	288
384	384
480	480
768	768

Symbol	Width (nominal) [mm]
2	42
3	60
7	95

Secondary side (magnet)

Notes: 1. This section describes what each symbol in a model name indicates. Some combinations of symbols are not available.

Model Designation (Note 1)

●LM-F series

L M - F P 2 B - 0 6 M - □ (Primary side: coil)

Symbol	Linear servo motor model
1SS0	LM-FP2B-06M

Symbol	Maximum speed [m/s]
M	2.0

Symbol	Continuous thrust [N]	
	Natural cooling	Liquid cooling
06	300	600

Symbol	Length (nominal) [mm]
B	290

Symbol	Width (nominal) [mm]
2	120

Primary side (coil)

L M - F S 2 0 - 4 8 0 - □ (Secondary side: magnet)

Symbol	Linear servo motor model
1SS0	LM-FS20-480
	LM-FS20-576

Symbol	Length (nominal) [mm]
480	480
576	576

Symbol	Width (nominal) [mm]
2	120

Secondary side (magnet)

Notes: 1. This section describes what each symbol in a model name indicates. Some combinations of symbols are not available.

Model Designation (Note 1)

●LM-K2 series

L M - K 2 P 1 A - 0 1 M - □ (Primary side: coil)

Symbol	Linear servo motor model
2SS1	LM-K2P1A-01M
	LM-K2P1C-03M
1SS1	LM-K2P2A-02M
	LM-K2P2C-07M
	LM-K2P3C-14M

Symbol	Maximum speed [m/s]
M	2.0

Symbol	Continuous thrust [N]
01	120
02	240
03	360
07	720
14	1440

Symbol	Length (nominal) [mm]
A	138
C	330

Symbol	Height (nominal) [mm]
1	54
2	74.5
3	114.5

Primary side (coil)

L M - K 2 S 1 0 - 2 8 8 - □ (Secondary side: magnet)

Symbol	Linear servo motor model
2SS1	LM-K2S10-288
	LM-K2S10-384
	LM-K2S10-480
	LM-K2S10-768
1SS1	LM-K2S20-288
	LM-K2S20-384
	LM-K2S20-480
	LM-K2S20-768
	LM-K2S30-288
	LM-K2S30-384
	LM-K2S30-480
	LM-K2S30-768

Symbol	Length (nominal) [mm]
288	288
384	384
480	480
768	768

Symbol	Width (nominal) [mm]
1	46
2	61
3	101

Secondary side (magnet)

Notes: 1. This section describes what each symbol in a model name indicates. Some combinations of symbols are not available.

Model Designation (Note 1)

●LM-U2 (medium thrust) series

L M - U 2 P A B - 0 5 M - □ (Primary side: coil)

Symbol	Length (nominal) [mm]
B	130
D	250
F	370

Symbol	Width (nominal) [mm]
A	66.5
B	86.5

Symbol	Maximum speed [m/s]
M	2.0

Symbol	Continuous thrust [N]
05	50
07	75
10	100
15	150
22	225

Symbol	Linear servo motor model
0SS0	LM-U2PAB-05M
	LM-U2PAD-10M
	LM-U2PAF-15M
1SS0	LM-U2PBB-07M
	LM-U2PBD-15M
	LM-U2PBF-22M

Primary side (coil)

L M - U 2 S A 0 - 2 4 0 - □ (Secondary side: magnet)

Symbol	Width (nominal) [mm]
A	62
B	82

Symbol	Length (nominal) [mm]
240	240
300	300
420	420

Symbol	Linear servo motor model
0SS0	LM-U2SA0-240
	LM-U2SA0-300
	LM-U2SA0-420
1SS1	LM-U2SB0-240
	LM-U2SB0-300
	LM-U2SB0-420

Secondary side (magnet)

●LM-U2 (large thrust) series

L M - U 2 P 2 B - 4 0 M - □ (Primary side: coil)

Symbol	Length (nominal) [mm]
B	286
C	406

Symbol	Maximum speed [m/s]
M	2.0

Symbol	Continuous thrust [N]
40	400
60	600

Symbol	Linear servo motor model
2SS0	LM-U2P2B-40M
	LM-U2P2C-60M

Primary side (coil)

L M - U 2 S 2 0 - 3 0 0 - □ (Secondary side: magnet)

Symbol	Length (nominal) [mm]
300	300
480	480

Symbol	Linear servo motor model
2SS1	LM-U2S20-300
	LM-U2S20-480

Secondary side (magnet)

Notes: 1. This section describes what each symbol in a model name indicates. Some combinations of symbols are not available.

LM-H3 Series Specifications

Linear servo motor model Primary side (coil)	LM-H3	P2A-07P-BSS0	P3A-12P-CSS0	P3B-24P-CSS0	P3C-36P-CSS0	P3D-48P-CSS0	P7A-24P-ASS0	P7B-48P-ASS0	P7C-72P-ASS0	P7D-96P-ASS0
Linear servo motor model Secondary side (magnet)	LM-H3	S20-288-BSS0 S20-384-BSS0 S20-480-BSS0 S20-768-BSS0	S30-288-CSS0 S30-384-CSS0 S30-480-CSS0 S30-768-CSS0				S70-288-ASS0 S70-384-ASS0 S70-480-ASS0 S70-768-ASS0			
Cooling method		Natural cooling								
Thrust	Continuous (Note 2) [N]	70	120	240	360	480	240	480	720	960
	Maximum [N]	175	300	600	900	1200	600	1200	1800	2400
Maximum speed (Note 1) [m/s]		3.0								
Magnetic attraction force [N]		630	1100	2200	3300	4400	2200	4400	6600	8800
Rated current [A]		1.8	1.7	3.4	5.1	6.8	3.4	6.8	10.2	13.6
Maximum current [A]		5.8	5.0	9.9	14.9	19.8	9.6	19.1	28.6	38.1
Recommended load to motor mass ratio		Maximum of 35 times the mass of the linear servo motor primary side								
Thermistor		Built-in								
Insulation class		155 (F)								
Structure		Open (IP rating: IP00)								
Vibration resistance		49 m/s^2								
Mass	Primary side (coil) [kg]	0.9	1.3	2.3	3.3	4.3	2.2	3.9	5.6	7.3
	Secondary side (magnet) [kg]	288 mm/pc: 0.7 384 mm/pc: 0.9 480 mm/pc: 1.1 768 mm/pc: 1.8	288 mm/pc: 1.0 384 mm/pc: 1.4 480 mm/pc: 1.7 768 mm/pc: 2.7				288 mm/pc: 2.8 384 mm/pc: 3.7 480 mm/pc: 4.7 768 mm/pc: 7.4			

Notes: 1. The maximum speed of the linear servo motor or the rated speed of the linear encoder, whichever is smaller, is the upper limit of the linear servo motor speed.
2. Use the linear servo motor at 70 % or less of the effective load ratio when it is in the servo lock state or in a small reciprocating motion.

LM-H3 Series Thrust Characteristics

LM-H3P2A-07P-BSS0 (Note 1, 2, 3)

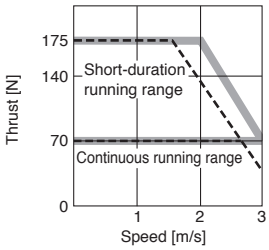

LM-H3P3A-12P-CSS0 (Note 1, 2, 3)

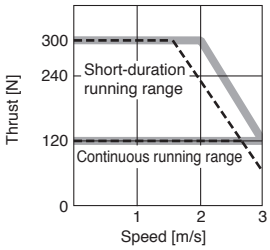

LM-H3P3B-24P-CSS0 (Note 1, 2, 3)

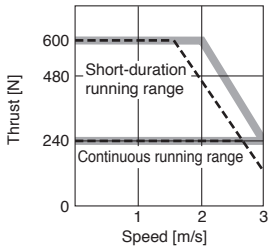

LM-H3P3C-36P-CSS0 (Note 1, 2, 3)

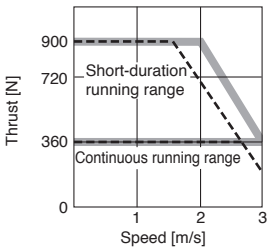

LM-H3P3D-48P-CSS0 (Note 1, 2, 3)

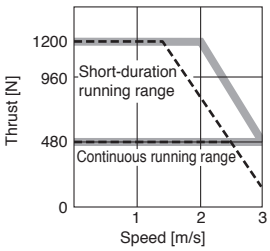

LM-H3P7A-24P-ASS0 (Note 1, 2, 3)

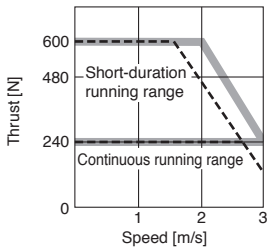

LM-H3P7B-48P-ASS0 (Note 1, 2, 3)

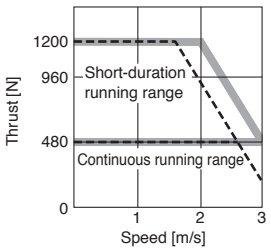

LM-H3P7C-72P-ASS0 (Note 1, 2, 3)

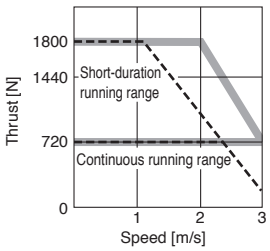

LM-H3P7D-96P-ASS0 (Note 1, 3)

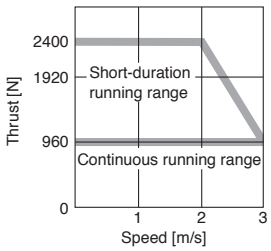

Notes: 1. ▬ : For 3-phase 200 V AC.
2. - - - - : For 1-phase 200 V AC.
3. Thrust drops when the power supply voltage is below the specified value.

LM-F Series Specifications

Linear servo motor model Primary side (coil)			LM-F	P2B-06M-1SS0
Linear servo motor model Secondary side (magnet)			LM-F	S20-480-1SS0 S20-576-1SS0
Cooling method				Natural cooling or liquid cooling
Thrust	Continuous (natural cooling) (Note 2)		[N]	300
	Continuous (liquid cooling) (Note 2)		[N]	600
	Maximum		[N]	1800
Maximum speed (Note 1)			[m/s]	2.0
Magnetic attraction force			[N]	4500
Rated current		Natural cooling	[A]	4.0
		Liquid cooling	[A]	7.8
Maximum current			[A]	30
Recommended load to motor mass ratio				Maximum of 15 times the mass of the linear servo motor primary side
Thermistor				Built-in
Insulation class				155 (F)
Structure				Open (IP rating: IP00)
Vibration resistance				49 m/s^2
Mass	Primary side (coil)		[kg]	9.0
	Secondary side (magnet)		[kg]	480 mm/pc: 7.0 576 mm/pc: 9.0

Notes: 1. The maximum speed of the linear servo motor or the rated speed of the linear encoder, whichever is smaller, is the upper limit of the linear servo motor speed.
2. Use the linear servo motor at 70 % or less of the effective load ratio when it is in the servo lock state or in a small reciprocating motion.

LM-F Series Thrust Characteristics

LM-FP2B-06M-1SS0 (Note 1, 2, 3)

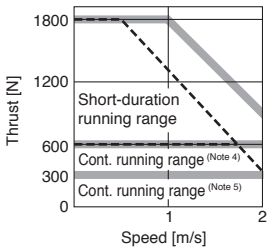

Notes: 1. ▬ : For 3-phase 200 V AC.
2. - - - - : For 1-phase 200 V AC.
3. Thrust drops when the power supply voltage is below the specified value.
4. Continuous running range (liquid cooling)
5. Continuous running range (natural cooling)

MEMO

LM-K2 Series Specifications

Linear servo motor model Primary side (coil)		LM-K2	P1A-01M-2SS1	P1C-03M-2SS1	P2A-02M-1SS1	P2C-07M-1SS1	P3C-14M-1SS1
Linear servo motor model Secondary side (magnet) (Note 2)		LM-K2	S10-288-2SS1 S10-384-2SS1 S10-480-2SS1 S10-768-2SS1		S20-288-1SS1 S20-384-1SS1 S20-480-1SS1 S20-768-1SS1		S30-288-1SS1 S30-384-1SS1 S30-480-1SS1 S30-768-1SS1
Cooling method			Natural cooling				
Thrust	Continuous (Note 3)	[N]	120	360	240	720	1440
	Maximum	[N]	300	900	600	1800	3600
Maximum speed (Note 1)		[m/s]	2.0				
Magnetic attraction force (Note 4)		[N]	0				
Magnetic attraction force (one side) (Note 5)			800	2400	1100	3200	6400
Rated current		[A]	2.3	6.8	3.7	12	15
Maximum current		[A]	7.6	23	13	39	47
Recommended load to motor mass ratio			Maximum of 30 times the mass of the linear servo motor primary side				
Thermistor			Built-in				
Insulation class			155 (F)				
Structure			Open (IP rating: IP00)				
Vibration resistance			49 m/s^2				
Mass	Primary side (coil)	[kg]	2.5	6.5	4.0	10	18
	Secondary side (magnet)	[kg]	288 mm/pc: 1.5 384 mm/pc: 2.0 480 mm/pc: 2.5 768 mm/pc: 3.9		288 mm/pc: 1.9 384 mm/pc: 2.5 480 mm/pc: 3.2 768 mm/pc: 5.0		288 mm/pc: 5.5 384 mm/pc: 7.3 480 mm/pc: 9.2 768 mm/pc: 14.6

Notes: 1. The maximum speed of the linear servo motor or the rated speed of the linear encoder, whichever is smaller, is the upper limit of the linear servo motor speed.
2. LM-K2 series has a structure of magnetic attraction counter-force and requires at least two blocks of identical secondary side (magnet).
3. Use the linear servo motor at 70 % or less of the effective load ratio when it is in the servo lock state or in a small reciprocating motion.
4. Magnetic attraction force is caused by assembly precision, etc.
5. Magnetic attraction force which occurs on one side of the secondary side is shown.

LM-K2 Series Thrust Characteristics

LM-K2P1A-01M-2SS1 (Note 1, 4)

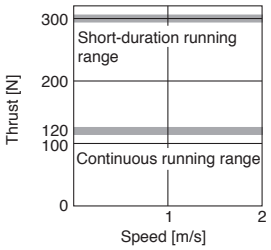

LM-K2P1C-03M-2SS1 (Note 2, 3, 4)

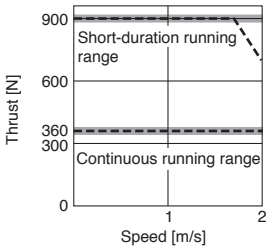

LM-K2P2A-02M-1SS1 (Note 1, 4)

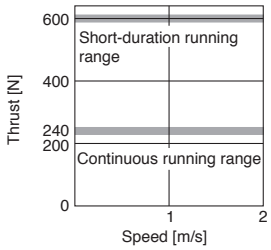

LM-K2P2C-07M-1SS1 (Note 2, 4)

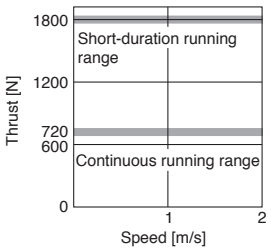

LM-K2P3C-14M-1SS1 (Note 2, 4)

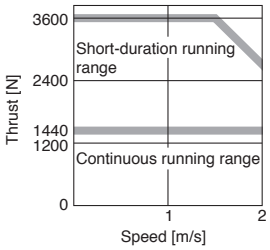

Notes: 1. ▬ : For 3-phase 200 V AC or 1-phase 200 V AC.
2. ▬ : For 3-phase 200 V AC.
3. - - - - : For 1-phase 200 V AC.
4. Thrust drops when the power supply voltage is below the specified value.

LM-U2 Series Specifications

Linear servo motor model Primary side (coil)		LM-U2	PAB-05M-0SS0	PAD-10M-0SS0	PAF-15M-0SS0	PBB-07M-1SS0	PBD-15M-1SS0	PBF-22M-1SS0	P2B-40M-2SS0	P2C-60M-2SS0
Linear servo motor model Secondary side (magnet)		LM-U2	SA0-240-0SS0 SA0-300-0SS0 SA0-420-0SS0			SB0-240-1SS1 SB0-300-1SS1 SB0-420-1SS1			S20-300-2SS1 S20-480-2SS1	
Cooling method			Natural cooling							
Thrust	Continuous (Note 2)	[N]	50	100	150	75	150	225	400	600
	Maximum	[N]	150	300	450	225	450	675	1600	2400
Maximum speed (Note 1)		[m/s]	2.0							
Magnetic attraction force		[N]	0							
Rated current		[A]	0.9	1.9	2.7	1.5	3.0	4.6	6.6	9.8
Maximum current		[A]	2.7	5.5	8.3	4.5	8.9	13.7	26.7	40.3
Recommended load to motor mass ratio			Maximum of 30 times the mass of the linear servo motor primary side							
Thermistor			Built-in							
Insulation class			155 (F)							
Structure			Open (IP rating: IP00)							
Vibration resistance			49 m/s^2							
Mass	Primary side (coil)	[kg]	0.3	0.6	0.8	0.4	0.8	1.1	2.9	4.2
	Secondary side (magnet)	[kg]	240 mm/pc: 2.0 300 mm/pc: 2.5 420 mm/pc: 3.5			240 mm/pc: 2.6 300 mm/pc: 3.2 420 mm/pc: 4.5			300 mm/pc: 9.6 480 mm/pc: 15.3	

Notes: 1. The maximum speed of the linear servo motor or the rated speed of the linear encoder, whichever is smaller, is the upper limit of the linear servo motor speed.
2. Use the linear servo motor at 70 % or less of the effective load ratio when it is in the servo lock state or in a small reciprocating motion.

LM-U2 Series Thrust Characteristics

LM-U2PAB-05M-0SS0 (Note 1, 4)

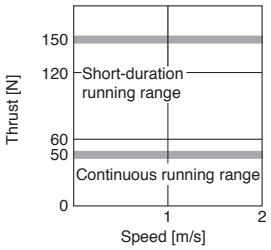

LM-U2PAD-10M-0SS0 (Note 1, 4)

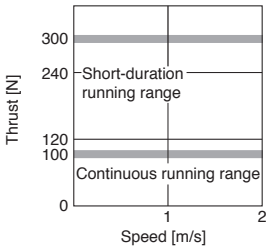

LM-U2PAF-15M-0SS0 (Note 1, 4)

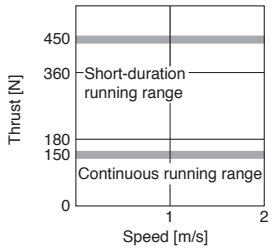

LM-U2PBB-07M-1SS0 (Note 1, 4)

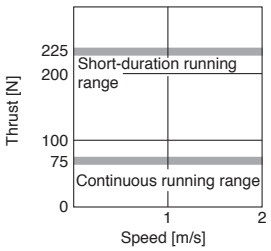

LM-U2PBD-15M-1SS0 (Note 1, 4)

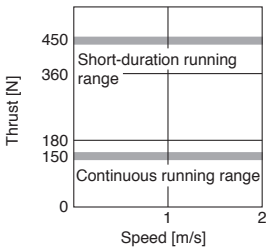

LM-U2PBF-22M-1SS0 (Note 1, 4)

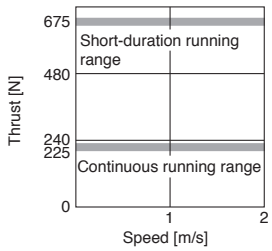

LM-U2P2B-40M-2SS0 (Note 2, 3, 4)

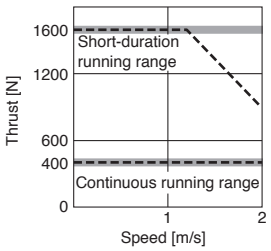

LM-U2P2C-60M-2SS0 (Note 2, 4)

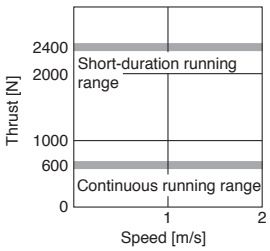

Notes: 1. ▬ : For 3-phase 200 V AC or 1-phase 200 V AC.
2. ▬ : For 3-phase 200 V AC.
3. - - - : For 1-phase 200 V AC.
4. Thrust drops when the power supply voltage is below the specified value.

Power Supply Capacity

Linear servo motors (primary side)		Servo amplifiers	Power supply capacity [kVA] (Note 1, 2)
LM-H3 series	LM-H3P2A-07P-BSS0	MR-J5-40G, MR-J5-40A MR-J5W2-44G, MR-J5W2-77G, MR-J5W2-1010G MR-J5W3-444G	0.9
	LM-H3P3A-12P-CSS0		
	LM-H3P3B-24P-CSS0	MR-J5-70G, MR-J5-70A MR-J5W2-77G, MR-J5W2-1010G	1.3
	LM-H3P3C-36P-CSS0		1.9
	LM-H3P3D-48P-CSS0	MR-J5-200G, MR-J5-200A	3.5
	LM-H3P7A-24P-ASS0	MR-J5-70G, MR-J5-70A MR-J5W2-77G, MR-J5W2-1010G	1.3
	LM-H3P7B-48P-ASS0	MR-J5-200G, MR-J5-200A	3.5
	LM-H3P7C-72P-ASS0		3.8
	LM-H3P7D-96P-ASS0	MR-J5-350G, MR-J5-350A	5.5
LM-F series	LM-FP2B-06M-1SS0	MR-J5-200G, MR-J5-200A	3.5
LM-K2 series	LM-K2P1A-01M-2SS1	MR-J5-40G, MR-J5-40A MR-J5W2-44G, MR-J5W2-77G, MR-J5W2-1010G MR-J5W3-444G	0.9
	LM-K2P1C-03M-2SS1	MR-J5-200G, MR-J5-200A	3.5
	LM-K2P2A-02M-1SS1	MR-J5-70G, MR-J5-70A MR-J5W2-77G, MR-J5W2-1010G	1.3
	LM-K2P2C-07M-1SS1	MR-J5-350G, MR-J5-350A	5.5
	LM-K2P3C-14M-1SS1		
LM-U2 series	LM-U2PAB-05M-0SS0	MR-J5-20G, MR-J5-20A MR-J5W2-22G, MR-J5W2-44G MR-J5W3-222G, MR-J5W3-444G	0.5
	LM-U2PAD-10M-0SS0	MR-J5-40G, MR-J5-40A MR-J5W2-44G, MR-J5W2-77G, MR-J5W2-1010G MR-J5W3-444G	0.9
	LM-U2PAF-15M-0SS0		
	LM-U2PBB-07M-1SS0	MR-J5-20G, MR-J5-20A MR-J5W2-22G, MR-J5W2-44G MR-J5W3-222G, MR-J5W3-444G	0.5
	LM-U2PBD-15M-1SS0	MR-J5-60G, MR-J5-60A MR-J5W2-77G, MR-J5W2-1010G	1.0
	LM-U2PBF-22M-1SS0	MR-J5-70G, MR-J5-70A MR-J5W2-77G, MR-J5W2-1010G	1.3
	LM-U2P2B-40M-2SS0	MR-J5-200G, MR-J5-200A	3.5
	LM-U2P2C-60M-2SS0	MR-J5-350G, MR-J5-350A	5.5

Notes: 1. The power supply capacity varies depending on the power supply impedance.
2. The listed values are the power supply capacity for one servo motor. For the multi-axis servo amplifiers, calculate the power supply capacity with the equation below:
Power supply capacity [kVA] = Sum of power supply capacity [kVA] of the connected servo motors

MEMO

LM-H3 Series Primary Side (Coil) Dimensions (Note 1, 2)

●LM-H3P2A-07P-BSS0

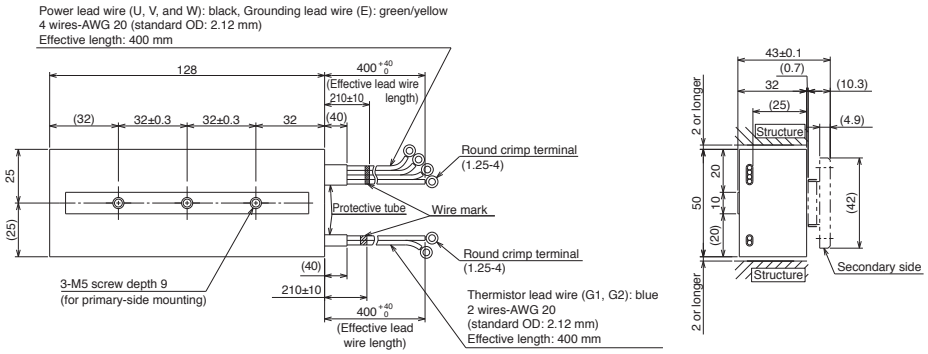

[Unit: mm]

●LM-H3P3A-12P-CSS0 ●LM-H3P3B-24P-CSS0 ●LM-H3P3C-36P-CSS0
●LM-H3P3D-48P-CSS0

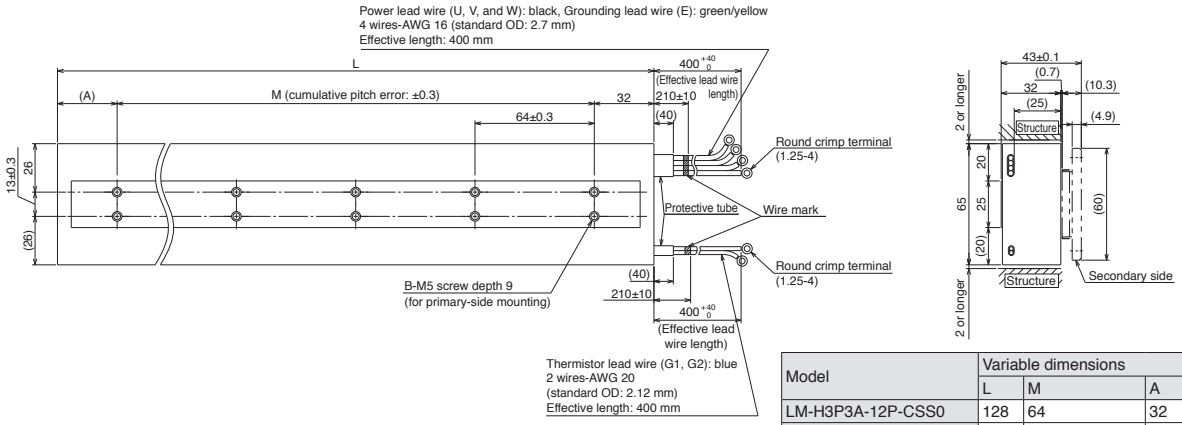

Model	Variable dimensions			
	L	M	A	B
LM-H3P3A-12P-CSS0	128	64	32	2 × 2
LM-H3P3B-24P-CSS0	224	2 × 64 = 128	64	2 × 3
LM-H3P3C-36P-CSS0	320	4 × 64 = 256	32	2 × 5
LM-H3P3D-48P-CSS0	416	5 × 64 = 320	64	2 × 6

[Unit: mm]

●LM-H3P7A-24P-ASS0 ●LM-H3P7B-48P-ASS0 ●LM-H3P7C-72P-ASS0
●LM-H3P7D-96P-ASS0

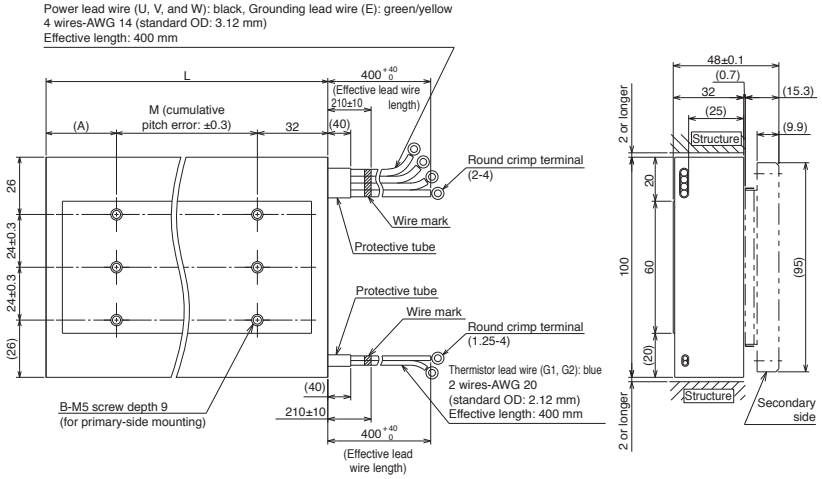

Model	Variable dimensions			
	L	M	A	B
LM-H3P7A-24P-ASS0	128	64	32	3 × 2
LM-H3P7B-48P-ASS0	224	2 × 64 = 128	64	3 × 3
LM-H3P7C-72P-ASS0	320	4 × 64 = 256	32	3 × 5
LM-H3P7D-96P-ASS0	416	5 × 64 = 320	64	3 × 6

[Unit: mm]

Notes: 1. Power, grounding and thermistor lead wires do not have a long bending life. Fix the lead wires led from the primary side (coil) to a moving part to prevent the lead wires from repetitive bending.
2. Minimum bending radius of the lead wire equals to six times the standard overall diameter of the lead wire.

LM-H3 Series Secondary Side (Magnet) Dimensions

●LM-H3S20-288-BSS0 ●LM-H3S20-384-BSS0 ●LM-H3S20-480-BSS0
●LM-H3S20-768-BSS0

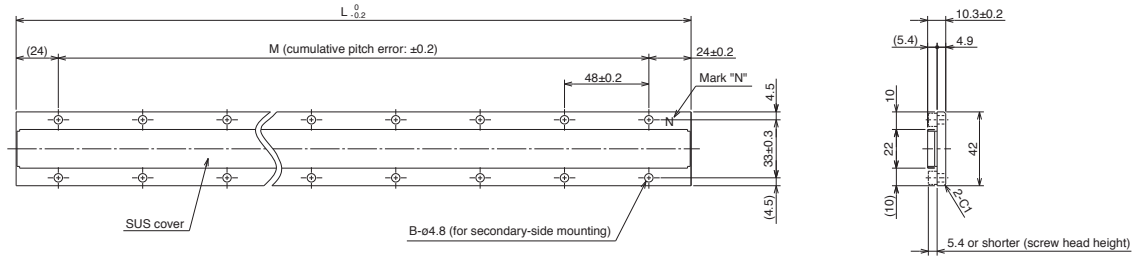

Model	Variable dimensions		
	L	M	B
LM-H3S20-288-BSS0	288	5 × 48 = 240	2 × 6
LM-H3S20-384-BSS0	384	7 × 48 = 336	2 × 8
LM-H3S20-480-BSS0	480	9 × 48 = 432	2 × 10
LM-H3S20-768-BSS0	768	15 × 48 = 720	2 × 16

[Unit: mm]

●LM-H3S30-288-CSS0 ●LM-H3S30-384-CSS0 ●LM-H3S30-480-CSS0
●LM-H3S30-768-CSS0

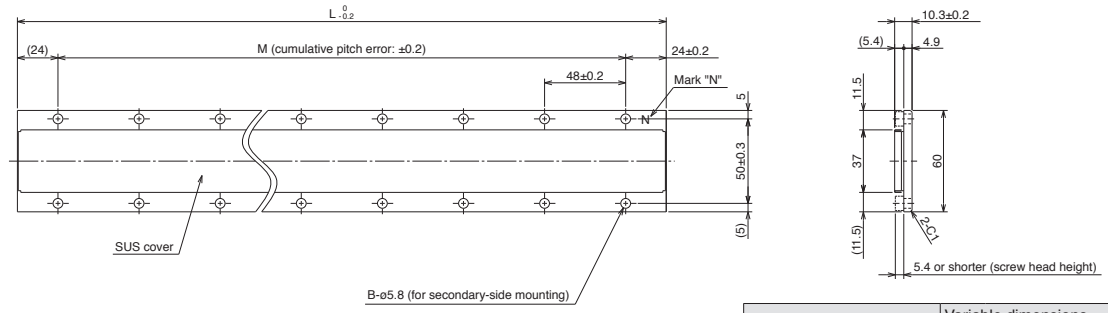

Model	Variable dimensions		
	L	M	B
LM-H3S30-288-CSS0	288	5 × 48 = 240	2 × 6
LM-H3S30-384-CSS0	384	7 × 48 = 336	2 × 8
LM-H3S30-480-CSS0	480	9 × 48 = 432	2 × 10
LM-H3S30-768-CSS0	768	15 × 48 = 720	2 × 16

[Unit: mm]

●LM-H3S70-288-ASS0 ●LM-H3S70-384-ASS0 ●LM-H3S70-480-ASS0
●LM-H3S70-768-ASS0

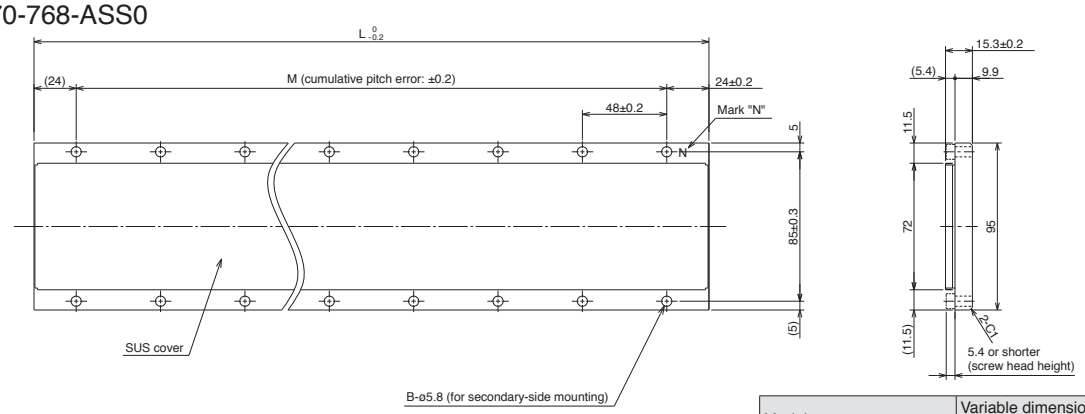

Model	Variable dimensions		
	L	M	B
LM-H3S70-288-ASS0	288	5 × 48 = 240	2 × 6
LM-H3S70-384-ASS0	384	7 × 48 = 336	2 × 8
LM-H3S70-480-ASS0	480	9 × 48 = 432	2 × 10
LM-H3S70-768-ASS0	768	15 × 48 = 720	2 × 16

[Unit: mm]

LM-F Series Primary Side (Coil) Dimensions (Note 1, 2)

●LM-FP2B-06M-1SS0

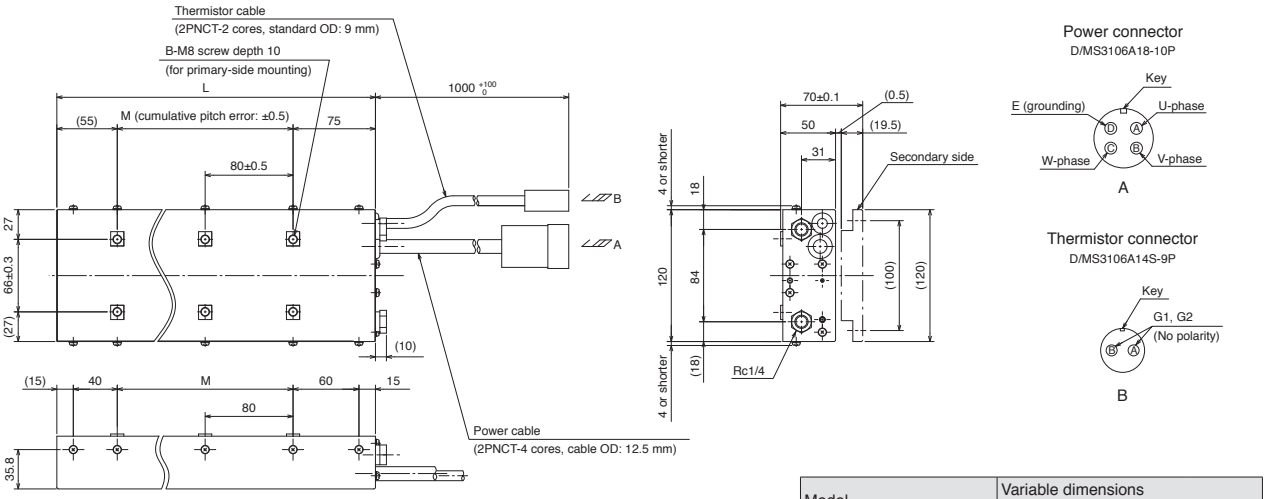

Model	Variable dimensions		
	L	M	B
LM-FP2B-06M-1SS0	290	2 × 80 = 160	2 × 3

[Unit: mm]

Notes: 1. Power and thermistor cables do not have a long bending life. Fix the cables led from the primary side (coil) to a moving part to prevent the cables from repetitive bending.
2. Minimum bending radius of the cable equals to six times the standard overall diameter of the cable.

LM-F Series Secondary Side (Magnet) Dimensions

●LM-FS20-480-1SS0 ●LM-FS20-576-1SS0

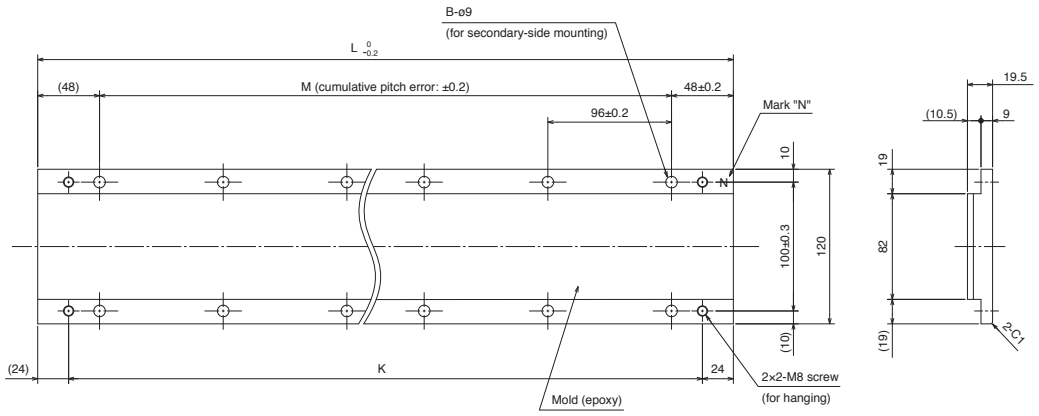

Model	Variable dimensions			
	L	M	B	K
LM-FS20-480-1SS0	480	4 × 96 = 384	2 × 5	432
LM-FS20-576-1SS0	576	5 × 96 = 480	2 × 6	528

[Unit: mm]

LM-K2 Series Primary Side (Coil) Dimensions (Note 1, 2)

●LM-K2P1A-01M-2SS1 ●LM-K2P1C-03M-2SS1

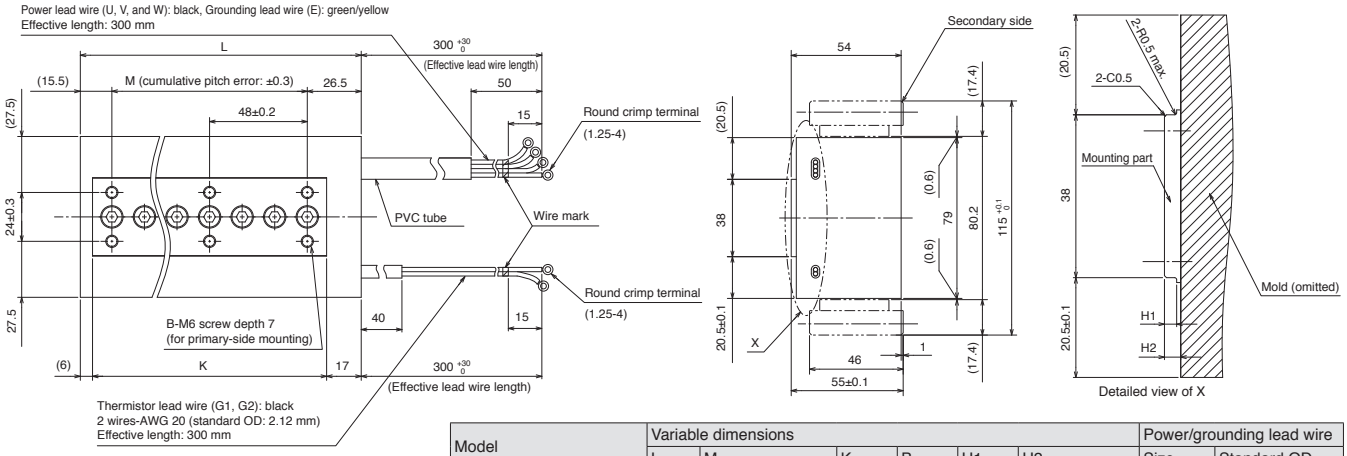

Model	Variable dimensions						Power/grounding lead wire	
	L	M	K	B	H1	H2	Size	Standard OD
LM-K2P1A-01M-2SS1	138	2 × 48 = 96	115	2 × 3	3	3.5 or longer	AWG 20	2.12
LM-K2P1C-03M-2SS1	330	6 × 48 = 288	307	2 × 7	1.5	2.5 or longer	AWG 16	2.7

[Unit: mm]

●LM-K2P2A-02M-1SS1 ●LM-K2P2C-07M-1SS1

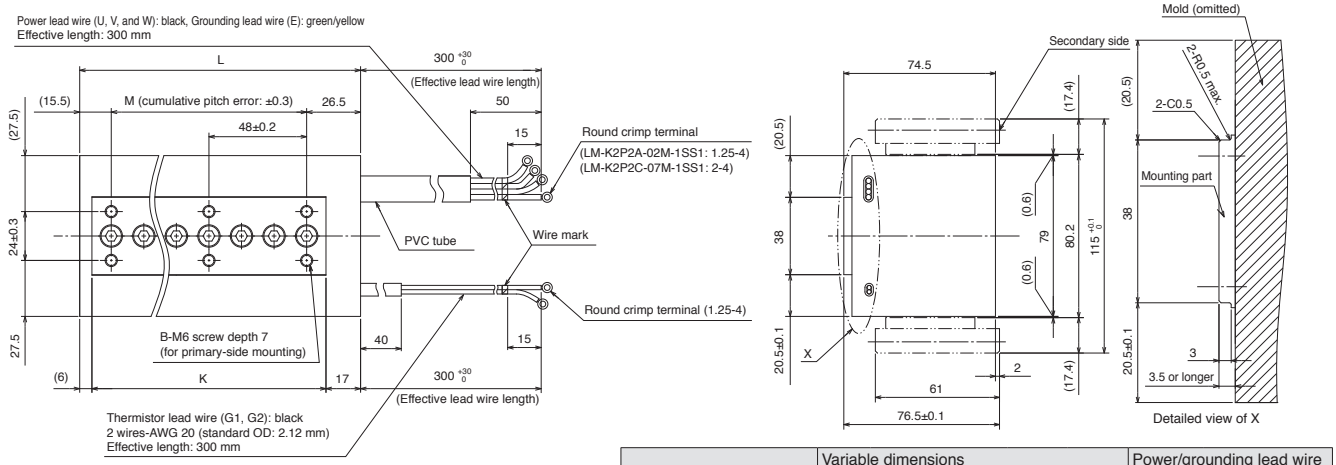

Model	Variable dimensions				Power/grounding lead wire	
	L	M	K	B	Size	Standard OD
LM-K2P2A-02M-1SS1	138	2 × 48 = 96	115	2 × 3	AWG 16	2.7
LM-K2P2C-07M-1SS1	330	6 × 48 = 288	307	2 × 7	AWG 14	3.12

[Unit: mm]

●LM-K2P3C-14M-1SS1

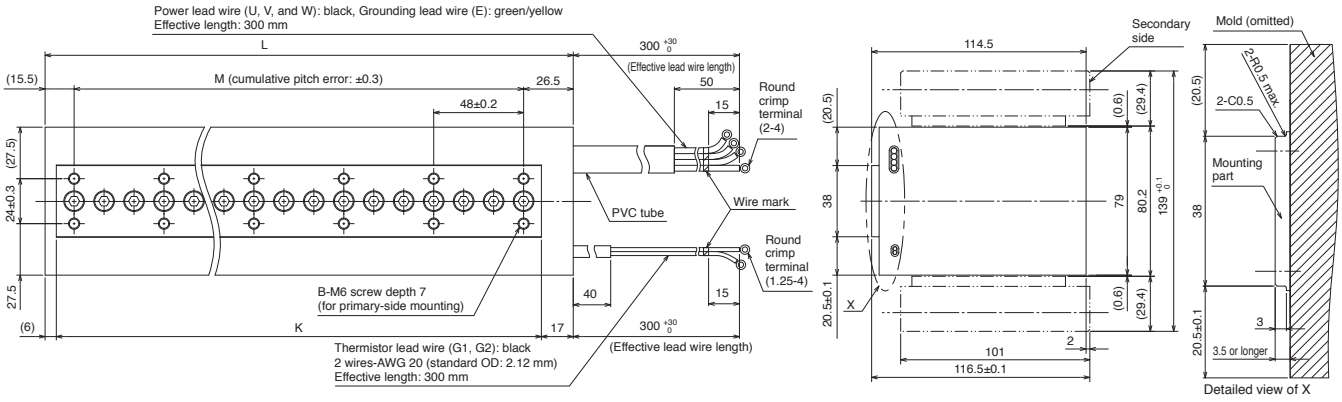

Model	Variable dimensions				Power/grounding lead wire	
	L	M	K	B	Size	Standard OD
LM-K2P3C-14M-1SS1	330	6 × 48 = 288	307	2 × 7	AWG 14	3.12

[Unit: mm]

Notes: 1. Power, grounding and thermistor lead wires do not have a long bending life. Fix the lead wires led from the primary side (coil) to a moving part to prevent the lead wires from repetitive bending.
2. Minimum bending radius of the lead wire equals to six times the standard overall diameter of the lead wire.

LM-K2 Series Secondary Side (Magnet) Dimensions

●LM-K2S10-288-2SS1 ●LM-K2S10-384-2SS1 ●LM-K2S10-480-2SS1
●LM-K2S10-768-2SS1

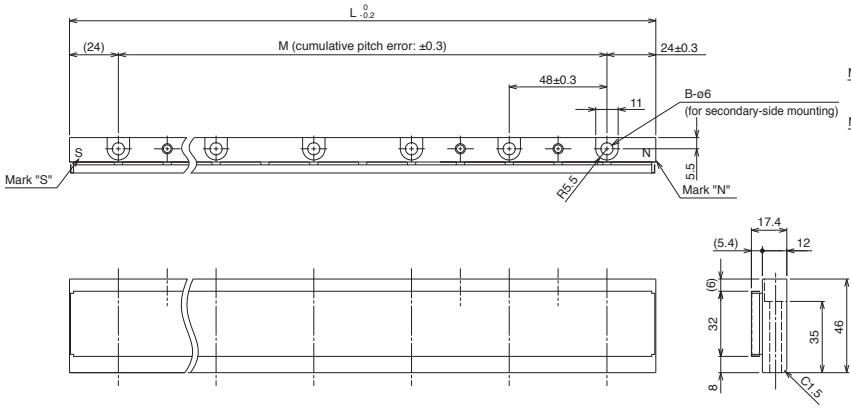

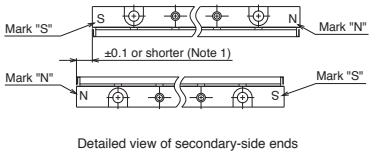

Detailed view of secondary-side ends

Model	Variable dimensions		
	L	M	B
LM-K2S10-288-2SS1	288	5 × 48 = 240	6
LM-K2S10-384-2SS1	384	7 × 48 = 336	8
LM-K2S10-480-2SS1	480	9 × 48 = 432	10
LM-K2S10-768-2SS1	768	15 × 48 = 720	16

[Unit: mm]

●LM-K2S20-288-1SS1 ●LM-K2S20-384-1SS1 ●LM-K2S20-480-1SS1
●LM-K2S20-768-1SS1

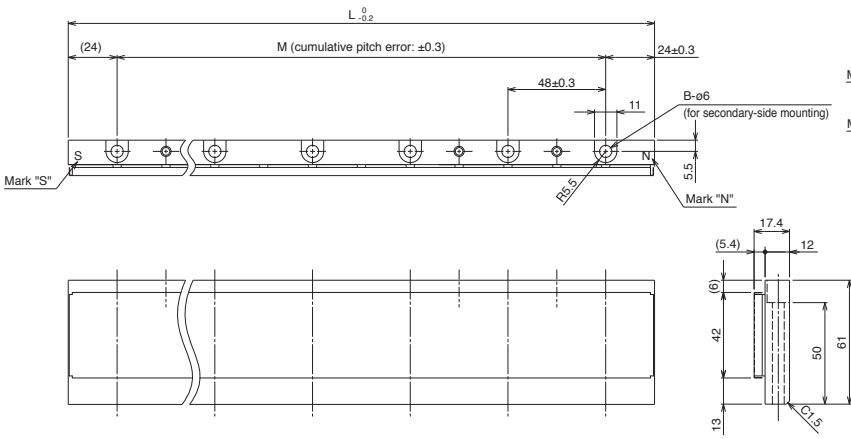

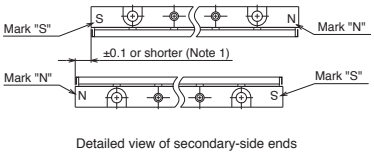

Detailed view of secondary-side ends

Model	Variable dimensions		
	L	M	B
LM-K2S20-288-1SS1	288	5 × 48 = 240	6
LM-K2S20-384-1SS1	384	7 × 48 = 336	8
LM-K2S20-480-1SS1	480	9 × 48 = 432	10
LM-K2S20-768-1SS1	768	15 × 48 = 720	16

[Unit: mm]

●LM-K2S30-288-1SS1 ●LM-K2S30-384-1SS1 ●LM-K2S30-480-1SS1
●LM-K2S30-768-1SS1

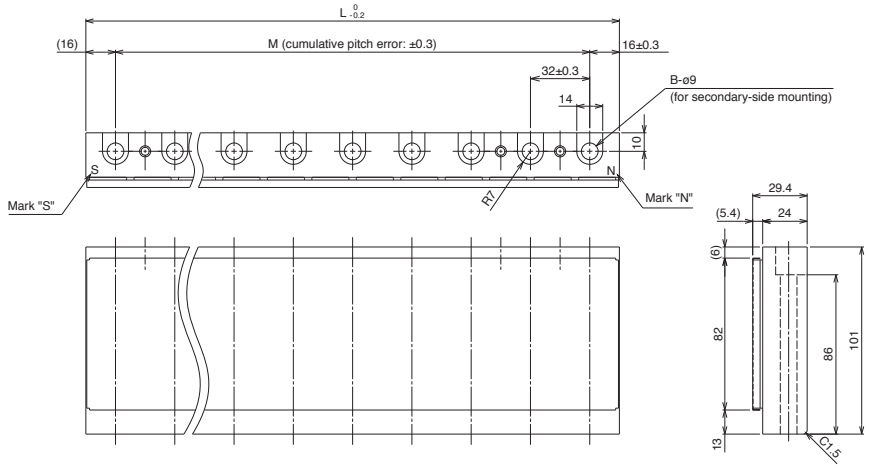

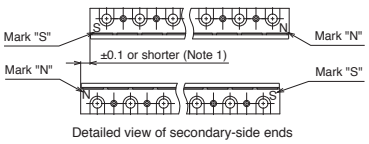

Detailed view of secondary-side ends

Model	Variable dimensions		
	L	M	B
LM-K2S30-288-1SS1	288	8 × 32 = 256	9
LM-K2S30-384-1SS1	384	11 × 32 = 352	12
LM-K2S30-480-1SS1	480	14 × 32 = 448	15
LM-K2S30-768-1SS1	768	23 × 32 = 736	24

[Unit: mm]

Notes: 1. Longitudinal deviation of the secondary side must be within ±0.1 mm.

LM-U2 Series Primary Side (Coil) Dimensions (Note 1, 2)

●LM-U2PAB-05M-0SS0 ●LM-U2PAD-10M-0SS0 ●LM-U2PAF-15M-0SS0

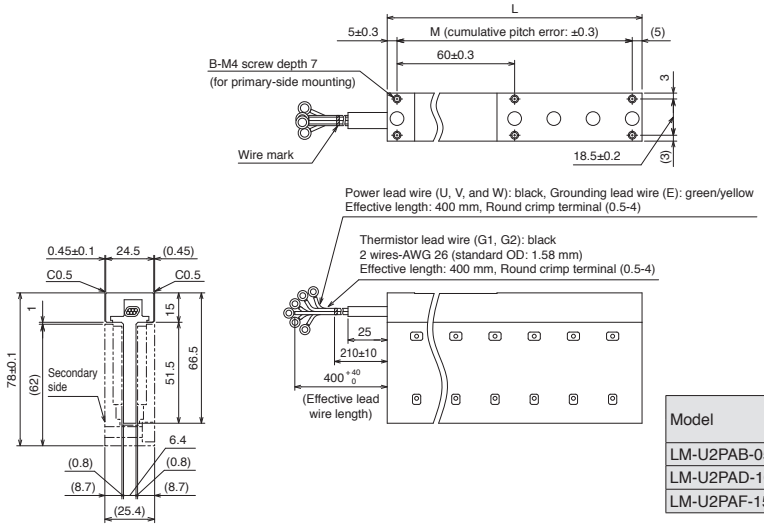

Model	Variable dimensions			Power/grounding lead wire	
	L	M	B	Size	Standard OD
LM-U2PAB-05M-0SS0	130	2 × 60 = 120	2 × 3	AWG 26	1.58
LM-U2PAD-10M-0SS0	250	4 × 60 = 240	2 × 5		
LM-U2PAF-15M-0SS0	370	6 × 60 = 360	2 × 7		

[Unit: mm]

●LM-U2PBB-07M-1SS0 ●LM-U2PBD-15M-1SS0 ●LM-U2PBF-22M-1SS0

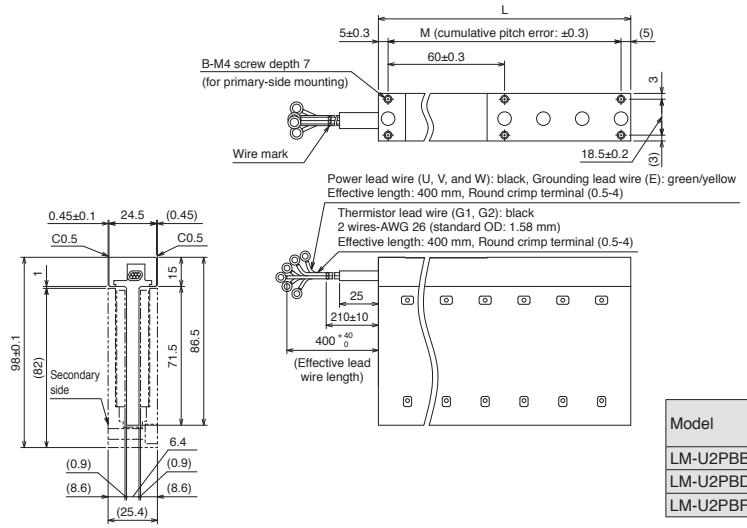

Model	Variable dimensions			Power/grounding lead wire	
	L	M	B	Size	Standard OD
LM-U2PBB-07M-1SS0	130	2 × 60 = 120	2 × 3	AWG 26	1.58
LM-U2PBD-15M-1SS0	250	4 × 60 = 240	2 × 5		
LM-U2PBF-22M-1SS0	370	6 × 60 = 360	2 × 7		

[Unit: mm]

●LM-U2P2B-40M-2SS0 ●LM-U2P2C-60M-2SS0

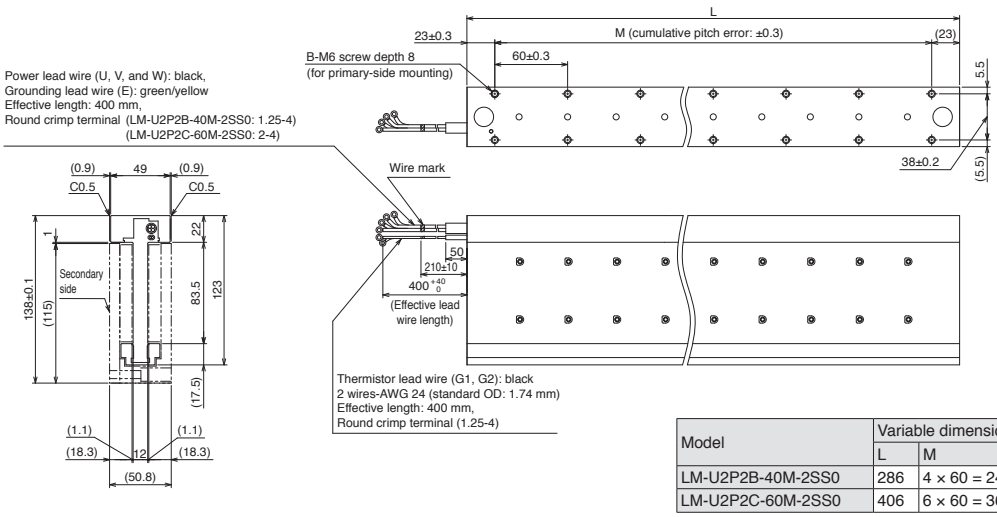

Model	Variable dimensions			Power/grounding lead wire	
	L	M	B	Size	Standard OD
LM-U2P2B-40M-2SS0	286	4 × 60 = 240	2 × 5	AWG 16	2.7
LM-U2P2C-60M-2SS0	406	6 × 60 = 360	2 × 7	AWG 14	3.12

[Unit: mm]

Notes: 1. Power, grounding and thermistor lead wires do not have a long bending life. Fix the lead wires led from the primary side (coil) to a moving part to prevent the lead wires from repetitive bending.

 2. Minimum bending radius of the lead wire equals to six times the standard overall diameter of the lead wire.

LM-U2 Series Secondary Side (Magnet) Dimensions

●LM-U2SA0-240-0SS0 ●LM-U2SA0-300-0SS0 ●LM-U2SA0-420-0SS0

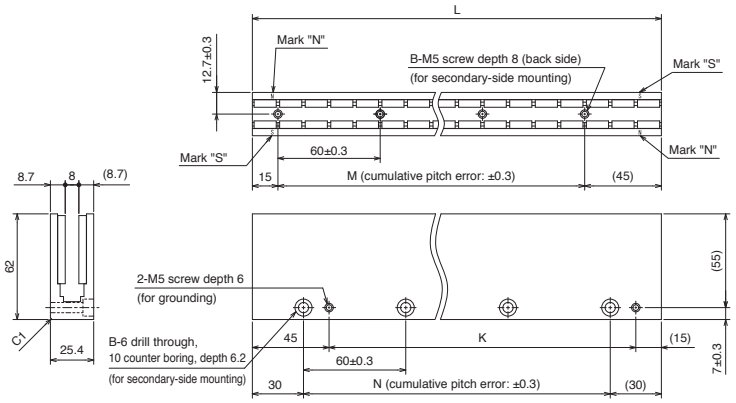

Model	Variable dimensions				
	L	M	B	K	N
LM-U2SA0-240-0SS0	240	3 × 60 = 180	4	180	3 × 60 = 180
LM-U2SA0-300-0SS0	300	4 × 60 = 240	5	240	4 × 60 = 240
LM-U2SA0-420-0SS0	420	6 × 60 = 360	7	360	6 × 60 = 360

[Unit: mm]

●LM-U2SB0-240-1SS1 ●LM-U2SB0-300-1SS1 ●LM-U2SB0-420-1SS1

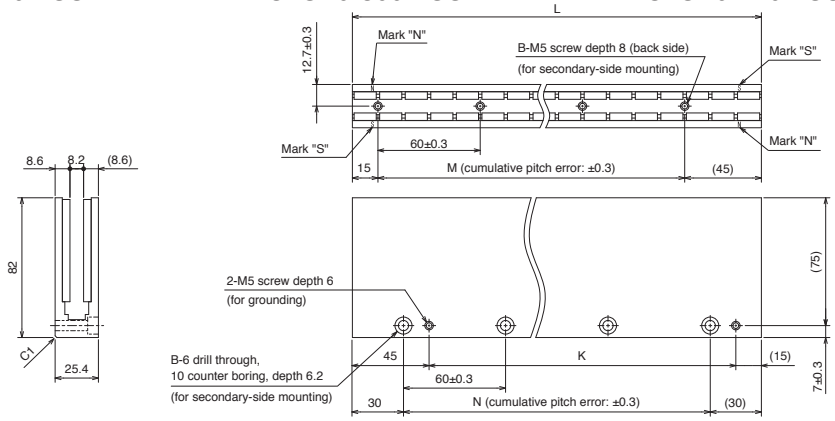

Model	Variable dimensions				
	L	M	B	K	N
LM-U2SB0-240-1SS1	240	3 × 60 = 180	4	180	3 × 60 = 180
LM-U2SB0-300-1SS1	300	4 × 60 = 240	5	240	4 × 60 = 240
LM-U2SB0-420-1SS1	420	6 × 60 = 360	7	360	6 × 60 = 360

[Unit: mm]

●LM-U2S20-300-2SS1 ●LM-U2S20-480-2SS1

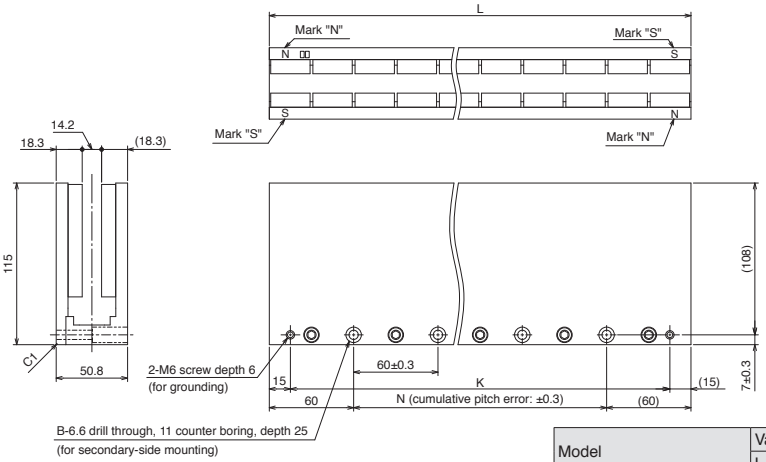

Model	Variable dimensions			
	L	N	B	K
LM-U2S20-300-2SS1	300	3 × 60 = 180	4	270
LM-U2S20-480-2SS1	480	6 × 60 = 360	7	450

[Unit: mm]

List of Linear Encoders (Note 1)

Linear encoder type		Manufacturer	Model	Resolution	Rated speed (Note 2)	Maximum effective measurement length (Note 3)	Communication method
Mitsubishi Electric serial interface compatible	Absolute type	Magnescale Co., Ltd.	SR77	0.05 µm/ 0.01 µm	3.3 m/s	2040 mm	Two-wire type
			SR87			3040 mm	
			SR27A	0.01 µm	3.3 m/s	2040 mm	Two-wire type/ Four-wire type
			SR67A			3640 mm	
			SmartSCALE SQ47	0.005 µm	3.3 m/s	3740 mm	
			SmartSCALE SQ57			3770 mm	
		Mitutoyo Corporation	AT343A	0.05 µm	2.0 m/s	3000 mm	Two-wire type
			AT543A-SC		2.5 m/s	2200 mm	
			AT545A-SC	20 µm/4096 (Approx. 0.005 µm)	2.5 m/s	2200 mm	
			ST741A	0.5 µm	5.0 m/s	6000 mm	
			ST742A				
			ST743A	0.1 µm			
			ST744A				
			ST748A				
			ST1341A	0.01 µm	8.0 m/s	12000 mm	
			ST1342A	0.001 µm		4200 mm	
		Renishaw	RESOLUTE RL40M	1 nm/50 nm	100 m/s	10000 mm	Two-wire type
			EVOLUTE EL40M	50 nm/100 nm/500 nm	100 m/s	3020 mm	
		Heidenhain	LC 495M	0.001 µm/ 0.01 µm	3.0 m/s	2040 mm	Four-wire type
			LC 195M			4240 mm	
			LIC 4193M	0.005 µm/ 0.01 µm	10.0 m/s	3040 mm	Two-wire type/ Four-wire type
			LIC 4195M			28440 mm	
			LIC 4197M			6040 mm	
			LIC 4199M			1020 mm	
			LIC 2197M	0.05 µm/ 0.1 µm	10.0 m/s	6020 mm	
			LIC 2199M			6020 mm	
		RSF Elektronik	MC15M	0.05 µm/ 0.1 µm	10.0 m/s	3020 mm	
	Incremental type	Magnescale Co., Ltd.	SR75	0.05 µm/ 0.01 µm	3.3 m/s	2040 mm	Two-wire type
			SR85			3040 mm	
			SL710 + PL101-RM/RHM	0.1 µm	10.0 m/s	100000 mm	
			SQ10 + PQ10 + MQ10	0.1 µm/ 0.05 µm	10.0 m/s	3800 mm	Two-wire type/ Four-wire type
		Heidenhain	LIDA 483 + EIB 392M (/16384)	20 µm/16384 (Approx. 1.22 nm)	4.0 m/s	3040 mm	Four-wire type
			LIDA 485 + EIB 392M (/16384)			30040 mm	
			LIDA 487 + EIB 392M (/16384)			6040 mm	
			LIDA 489 + EIB 392M (/16384)			1020 mm	
			LIDA 287 + EIB 392M (/16384)	200 µm/16384 (Approx. 12.2 nm)		10000 mm	
			LIDA 289 + EIB 392M (/16384)				
			LIP 481 + EIB 392M (/4096)	4 µm/4096 (Approx. 0.977 nm)	1.6 m/s	1020 mm	
			LIP 6081 + EIB 392M (/4096)			1440 mm	
		Nidec Sankyo Corporation	PSLH041	0.1 µm	5.0 m/s	2400 mm	Two-wire type
A/B/Z-phase differential output type (Note 4, 6)		Not designated	-	0.001 µm to 5 µm (Note 5)	Depends on the linear encoder	Depends on the linear encoder	A/B/Z-phase differential output method

Notes: 1. Contact the relevant linear encoder manufacturer for details on operating environment and specifications of the linear encoder such as ambient temperature, vibration resistance and IP rating.
2. The listed values are the manufacturer's specifications. When combined with MELSERVO-J5 Series servo amplifiers, the specification is the lower value of either the listed value or the servo motor rated speed.
3. The listed values are the manufacturer's specifications. The maximum length of the encoder cable between linear encoder and servo amplifier is 30 m.
4. When using the A/B/Z-phase differential output type linear encoder, use MR-J5-G-RJ/MR-J5-A-RJ servo amplifier.
5. Select the linear encoder within this range.
6. The phase difference of the A-phase pulse and the B-phase pulse, and the width of the Z-phase pulse must be 200 ns or wider. The output pulse of A-phase and B-phase of the A/B/Z-phase differential output linear encoder is in the multiply-by-four count method. Homing is not possible with a linear encoder without Z-phase.

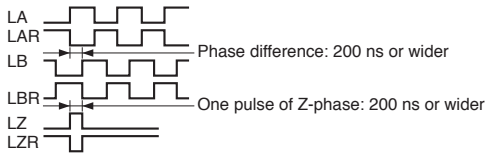

6 Direct Drive Motors

Model Designation 6-2

Specifications
TM-RG2M/TM-RU2M Series 6-4
TM-RFM Series 6-6

Machine Accuracy 6-9

Power Supply Capacity 6-10

Dimensions
TM-RG2M Series 6-12
TM-RU2M Series 6-14
TM-RFM Series 6-16

* Refer to p. 7-55 in this catalog for conversion of units.

Model Designation (Note 1, 2)

Low-profile series

●Flange type

T M - R G 2 M □ □ □

Direct drive motor series

Symbol	Rated speed [r/min]
30	300

Symbol	Motor outer diameter [mm] (Frame dimensions)
C	ø130
E	ø180
G	ø230

Symbol	Rated torque [N•m]
002	2.2
004	4.5
009	9

●Table type

T M - R U 2 M □ □ □

Direct drive motor series

Symbol	Rated speed [r/min]
30	300

Symbol	Motor outer diameter [mm] (Frame dimensions)
C	ø130
E	ø180
G	ø230

Symbol	Rated torque [N•m]
002	2.2
004	4.5
009	9

Notes: 1. This section describes what each symbol in a model name indicates. Some combinations of symbols are not available.
2. Use the direct drive motors manufactured in June 2019 or later.

Model Designation (Note 1, 2)

High-rigidity series

TM-RFM□ □ □

Direct drive motor series

Symbol	Rated torque [N•m]
002	2
004	4
006	6
012	12
018	18
040	40
048	48
072	72
120	120

Symbol	Motor outer diameter [mm] (Frame dimensions)
C	ø130
E	ø180
G	ø230
J	ø330

Symbol	Rated speed [r/min]
10	100
20	200

Notes: 1. This section describes what each symbol in a model name indicates. Some combinations of symbols are not available.
2. Use the direct drive motors manufactured in June 2019 or later.

TM-RG2M/TM-RU2M Series Specifications

Direct drive motor model	TM-RG2M- TM-RU2M-	002C30	004E30	009G30
Motor outer diameter (frame dimensions) [mm]		ø130	ø180	ø230
Continuous running duty	Rated output (Note 4) [W]	69	141 (188)	283
	Rated torque (Note 3, 4) [N•m]	2.2	4.5 (6)	9
Maximum torque (Note 4) [N•m]		8.8	13.5 (18)	27
Rated speed [r/min]		300		
Maximum speed [r/min]		600		
Permissible instantaneous speed [r/min]		690		
Power rate at continuous rated torque (Note 4) [kW/s]		6.1	3.4 (6.0)	5.5
Rated current (Note 4) [A]		1.2	1.3 (1.7)	2.2
Maximum current (Note 4) [A]		4.9	4.0 (5.3)	6.7
Moment of inertia J [× 10^{-4} kg•m^2]		7.88	60.2	147
Recommended load to motor inertia ratio (Note 1)		50 times or less	20 times or less	
Absolute accuracy (Note 5) [s]		±15	±12.5	
Speed/ position detector	Absolute/incremental *1	21-bit encoder 2097152 pulses/rev	22-bit encoder 4194304 pulses/rev	
Thermistor		Built-in		
Insulation class		155 (F)		
Structure		Totally enclosed, natural cooling (IP rating: IP40) (Note 2)		
Vibration resistance *2		X: 49 m/s^2 Y: 49 m/s^2		
Vibration rank		V10 *4		
Rotor permissible load *3	Moment load [N•m]	15	49	65
	Axial load [N]	770	2300	3800
Mass [kg]		2.7	5.5	8.3

Notes: 1. Contact your local sales office if the load to motor inertia ratio exceeds the value in the table.
2. Connectors and a gap along the rotor (output shaft) are excluded.
3. When unbalanced torque is generated, such as in a vertical lift machine, be sure to use the absolute position detection system, and keep the unbalanced torque under 70 % of the servo motor rated torque.
4. The value in brackets is applicable when the rated and maximum torques are increased with a combination with a larger-capacity servo amplifier. Refer to "Combinations of Direct Drive Motors and Servo Amplifiers" in this catalog for the combinations.
5. Absolute accuracy varies according to the mounting state of load and the surrounding environment.

Refer to "Annotations for Direct Drive Motor Specifications" on p. 6-11 in this catalog for the details about asterisks 1 to 4.

TM-RG2M/TM-RU2M Series Torque Characteristics

TM-RG2M002C30,
TM-RU2M002C30 (Note 1, 2, 3)

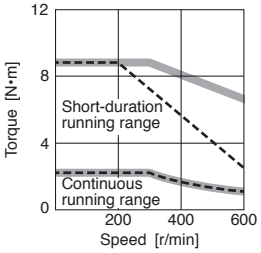

TM-RG2M004E30,
TM-RU2M004E30 (Note 1, 2, 3)

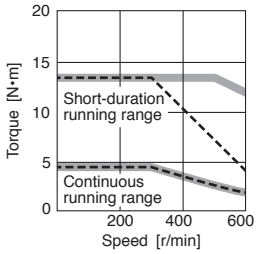

TM-RG2M004E30,
TM-RU2M004E30 (Note 1, 2, 3, 4)
(when torque is increased)

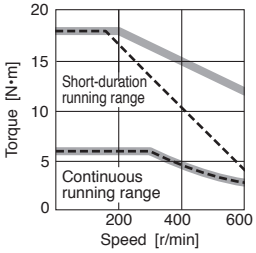

TM-RG2M009G30,
TM-RU2M009G30 (Note 1, 2, 3)

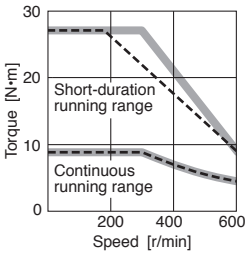

Notes: 1. ▬▬ : For 3-phase 200 V AC or 1-phase 230 V AC.
2. - - - - : For 1-phase 200 V AC.
3. Torque drops when the power supply voltage is below the specified value.
4. This value is applicable when the rated and maximum torques are increased with a combination with a larger-capacity servo amplifier. Refer to "Combinations of Direct Drive Motors and Servo Amplifiers" in this catalog for the combinations.

Mounting of TM-RG2M/TM-RU2M Series

●Flange type (with pilot)

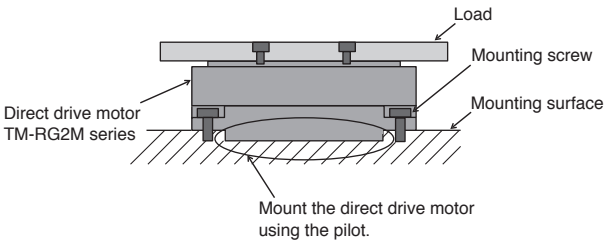

●Table type (with positioning pin holes)

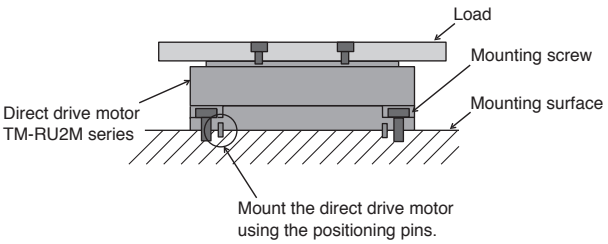

Precautions when mounting the direct drive motor

- Fix the direct drive motor securely on a high-rigid mounting surface because a machine resonance may occur if the rigidity of the mounting surface is low.
- Fix the mounting screws of the direct drive motor and a rotating table securely to ensure enough rigidity.
- To ensure heat dissipation and accuracy, mount the direct drive motor on a high-rigid mounting surface which has enough heat dissipation area without gaps between the bottom of the direct drive motor and the mounting surface.
- The flange type has a higher mounting accuracy than the table type. When a high-mounting accuracy is required, select the flange type.
  Refer to "Direct Drive Motor Machine Accuracy" on p. 6-9 in this catalog for the machine accuracy of each direct drive motor, and refer to the dimensions in this catalog for the dimensional tolerance.

TM-RFM Series Specifications

Direct drive motor model		TM-RFM	002C20	004C20	006C20	006E20	012E20	018E20
Motor outer diameter (frame dimensions)		[mm]	ø130			ø180		
Continuous running duty	Rated output	[W]	42	84	126	126	251	377
	Rated torque (Note 3)	[N•m]	2	4	6	6	12	18
Maximum torque		[N•m]	6	12	18	18	36	54
Rated speed		[r/min]	200					
Maximum speed		[r/min]	500					
Permissible instantaneous speed		[r/min]	575					
Power rate at continuous rated torque		[kW/s]	3.7	9.6	16.1	4.9	12.9	21.8
Rated current		[A]	1.3	2.2	3.2	3.0	3.8	6.0
Maximum current		[A]	3.9	6.6	9.6	9.0	12	18
Moment of inertia J		[× 10^{-4} kg•m^2]	10.9	16.6	22.4	74.0	111	149
Recommended load to motor inertia ratio (Note 1)			50 times or less					
Absolute accuracy (Note 4)		[s]	±15			±12.5		
Speed/position detector			Absolute/incremental 20-bit encoder *1 (resolution: 1048576 pulses/rev)					
Thermistor			Built-in					
Insulation class			155 (F)					
Structure			Totally enclosed, natural cooling (IP rating: IP42) (Note 2)					
Vibration resistance *2			X: 49 m/s^2 Y: 49 m/s^2					
Vibration rank			V10 *4					
Rotor permissible load *3	Moment load	[N•m]	22.5			70		
	Axial load	[N]	1100			3300		
Mass		[kg]	5.2	6.8	8.4	11	15	18

Notes: 1. Contact your local sales office if the load to motor inertia ratio exceeds the value in the table.
2. Connectors and a gap along the rotor (output shaft) are excluded.
3. When unbalanced torque is generated, such as in a vertical lift machine, be sure to use the absolute position detection system, and keep the unbalanced torque under 70 % of the servo motor rated torque.
4. Absolute accuracy varies according to the mounting state of load and the surrounding environment.

Refer to "Annotations for Direct Drive Motor Specifications" on p. 6-11 in this catalog for the details about asterisks 1 to 4.

TM-RFM Series Specifications

Direct drive motor model		TM-RFM	012G20	048G20	072G20	040J10	120J10
Motor outer diameter (frame dimensions)		[mm]	ø230			ø330	
Continuous running duty	Rated output	[W]	251	1005	1508	419	1257
	Rated torque (Note 3)	[N•m]	12	48	72	40	120
Maximum torque		[N•m]	36	144	216	120	360
Rated speed		[r/min]	200			100	
Maximum speed		[r/min]	500			200	
Permissible instantaneous speed		[r/min]	575			230	
Power rate at continuous rated torque		[kW/s]	6.0	37.5	59.3	9.4	40.9
Rated current		[A]	3.6	11	16	4.3	11
Maximum current		[A]	11	33	48	13	33
Moment of inertia J		[× 10^{-4} kg•m^2]	238	615	875	1694	3519
Recommended load to motor inertia ratio (Note 1)			50 times or less				
Absolute accuracy (Note 4)		[s]	±12.5			±10	
Speed/position detector			Absolute/incremental 20-bit encoder *1 (resolution: 1048576 pulses/rev)				
Thermistor			Built-in				
Insulation class			155 (F)				
Structure			Totally enclosed, natural cooling (IP rating: IP42) (Note 2)				
Vibration resistance *2			X: 49 m/s^2 Y: 49 m/s^2			X: 24.5 m/s^2 Y: 24.5 m/s^2	
Vibration rank			V10 *4				
Rotor permissible load *3	Moment load		93			350	
	Axial load	[N]	5500			16000	
Mass		[kg]	17	36	52	53	91

Notes: 1. Contact your local sales office if the load to motor inertia ratio exceeds the value in the table.
2. Connectors and a gap along the rotor (output shaft) are excluded.
3. When unbalanced torque is generated, such as in a vertical lift machine, be sure to use the absolute position detection system, and keep the unbalanced torque under 70 % of the servo motor rated torque.
4. Absolute accuracy varies according to the mounting state of load and the surrounding environment.

Refer to "Annotations for Direct Drive Motor Specifications" on p. 6-11 in this catalog for the details about asterisks 1 to 4.

TM-RFM Series Torque Characteristics

TM-RFM002C20 (Note 1, 2, 3)

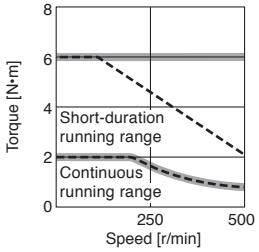

TM-RFM004C20 (Note 1, 2, 3)

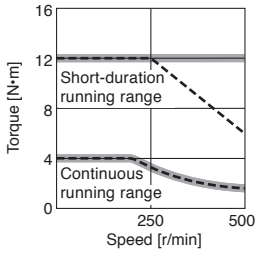

TM-RFM006C20 (Note 1, 2, 3)

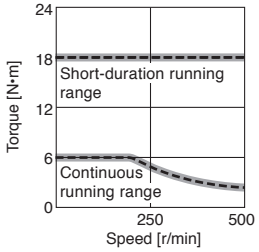

TM-RFM006E20 (Note 1, 2, 3)

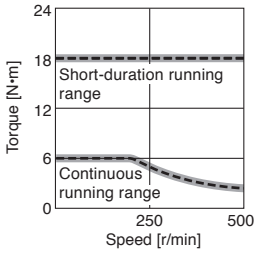

TM-RFM012E20 (Note 1, 2, 3)

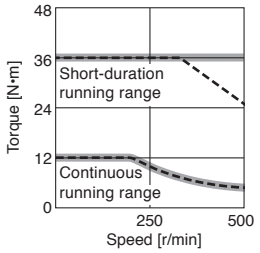

TM-RFM012E20 (Note 1, 2, 3)

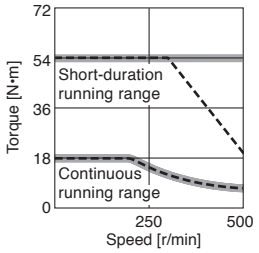

TM-RFM012G20 (Note 1, 2, 3)

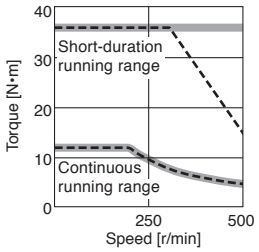

TM-RFM048G20 (Note 1, 3)

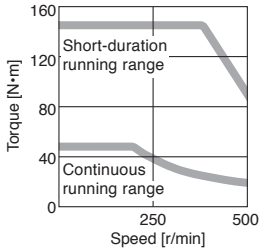

TM-RFM072G20 (Note 1, 3)

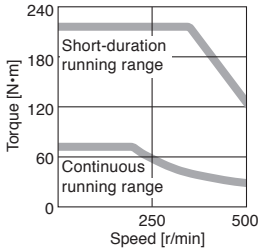

TM-RFM040J10 (Note 1, 2, 3)

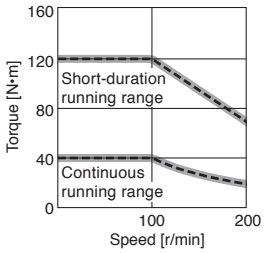

TM-RFM120J10 (Note 1, 3)

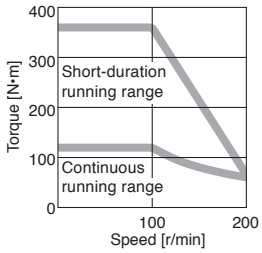

Notes: 1. ▬▬: For 3-phase 200 V AC or 1-phase 230 V AC.
The following direct drive motors are compatible with 1-phase 230 V AC:
TM-RFM002C20, TM-RFM004C20, TM-RFM006C20, TM-RFM006E20, TM-RFM012E20, TM-RFM018E20, TM-RFM012G20, and TM-RFM040J10
2. - - - -: For 1-phase 200 V AC.
3. Torque drops when the power supply voltage is below the specified value.

Direct Drive Motor Machine Accuracy

The machine accuracy related to the direct drive motor rotor (output shaft) and mounting is indicated below:

Item	Measuring position	Accuracy [mm]
Runout of flange surface about rotor (output shaft)	a	0.05
Runout of fitting outer diameter of flange surface	b	0.07
Runout of rotor (output shaft)	c	0.04
Runout of rotor (output shaft) end	d	0.02

●TM-RG2M series

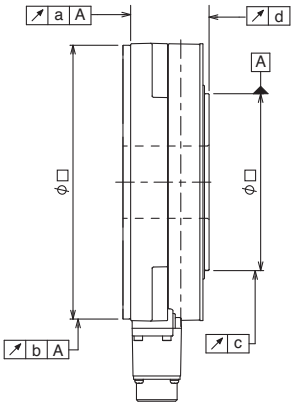

●TM-RU2M series

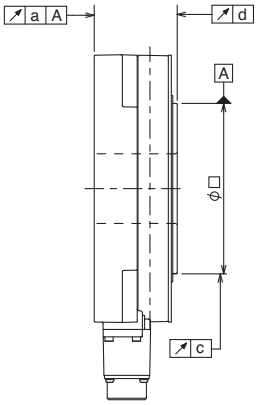

●TM-RFM series

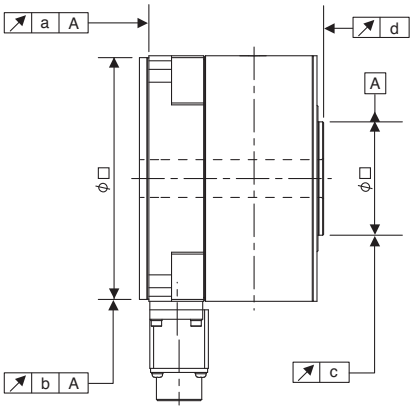

Power Supply Capacity

Direct drive motor		Servo amplifier	Power supply capacity [kVA] (Note 1, 2)
TM-RG2M/ TM-RU2M series	TM-RG2M002C30	MR-J5-20G, MR-J5-20A MR-J5W2-22G, MR-J5W2-44G MR-J5W3-222G, MR-J5W3-444G	0.25
	TM-RU2M002C30		
	TM-RG2M004E30	MR-J5-20G, MR-J5-20A MR-J5W2-22G MR-J5W3-222G	0.5
	TM-RU2M004E30		
	TM-RG2M004E30	MR-J5-40G, MR-J5-40A MR-J5W2-44G MR-J5W3-444G	0.7
	TM-RU2M004E30		
	TM-RG2M009G30	MR-J5-40G, MR-J5-40A MR-J5W2-44G, MR-J5W2-77G, MR-J5W2-1010G MR-J5W3-444G	0.9
	TM-RU2M009G30		
TM-RFM series	TM-RFM002C20	MR-J5-20G, MR-J5-20A MR-J5W2-22G, MR-J5W2-44G MR-J5W3-222G, MR-J5W3-444G	0.25
	TM-RFM004C20	MR-J5-40G, MR-J5-40A MR-J5W2-44G, MR-J5W2-77G, MR-J5W2-1010G MR-J5W3-444G	0.38
	TM-RFM006C20	MR-J5-60G, MR-J5-60A MR-J5W2-77G, MR-J5W2-1010G	0.53
	TM-RFM006E20	MR-J5-60G, MR-J5-60A MR-J5W2-77G, MR-J5W2-1010G	0.46
	TM-RFM012E20	MR-J5-70G, MR-J5-70A MR-J5W2-77G, MR-J5W2-1010G	0.81
	TM-RFM018E20	MR-J5-100G, MR-J5-100A MR-J5W2-1010G	1.3
	TM-RFM012G20	MR-J5-70G, MR-J5-70A MR-J5W2-77G, MR-J5W2-1010G	0.71
	TM-RFM048G20	MR-J5-350G, MR-J5-350A	2.7
	TM-RFM072G20	MR-J5-350G, MR-J5-350A	3.8
	TM-RFM040J10	MR-J5-70G, MR-J5-70A MR-J5W2-77G, MR-J5W2-1010G	1.2
	TM-RFM120J10	MR-J5-350G, MR-J5-350A	3.4

Notes: 1. The power supply capacity varies depending on the power supply impedance.
2. The listed values are the power supply capacity for one servo motor. For the multi-axis servo amplifiers, calculate the power supply capacity with the equation below:
Power supply capacity [kVA] = Sum of power supply capacity [kVA] of the connected servo motors

Annotations for Direct Drive Motor Specifications

*1. Be sure to connect the following options for absolute position detection system.
• MR-J5-G/MR-J5-A: battery (MR-BAT6V1SET or MR-BAT6V1SET-A) and absolute position storage unit (MR-BTAS01)
• MR-J5W_: battery case (MR-BT6VCASE), battery (MR-BAT6V1) × 5 pcs, and absolute position storage unit (MR-BTAS01)
Refer to "MR-J5 User's Manual" for details.

*2. The vibration direction is shown in the diagram below. The numerical value indicates the maximum value of the component.
Fretting tends to occur on the bearing when the direct drive motor stops. Thus, maintain vibration level at approximately one-half of the allowable value.

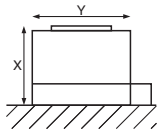

*3. The following is calculation examples of axial and moment loads to the rotor (output shaft) of the direct drive motor. The axial and moment loads must be maintained equal to or below the permissible value.

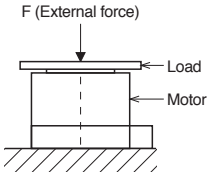

Axial load
= F + Load mass

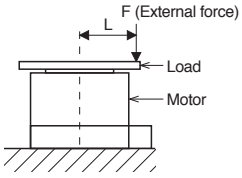

Axial load
= F + Load mass
Moment load
= F × L

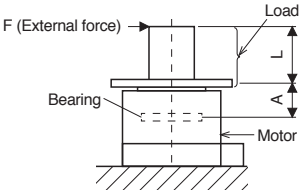

Axial load = Load mass
Moment load = F × (L + A)

Motor outer diameter [mm] (Frame dimensions)	Dimension A [mm]	
	TM-RG2M series TM-RU2M series	TM-RFM series
ø130	20.6	19.1
ø180	20.7	20.2
ø230	18.0	24.4
ø330	-	32.5

*4. V10 indicates that the amplitude of the direct drive motor itself is 10 μm or less. The following shows mounting posture and measuring position of the direct drive motor during the measurement:

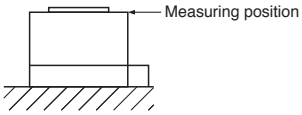

TM-RG2M Series Dimensions (Note 1, 2)

●TM-RG2M002C30

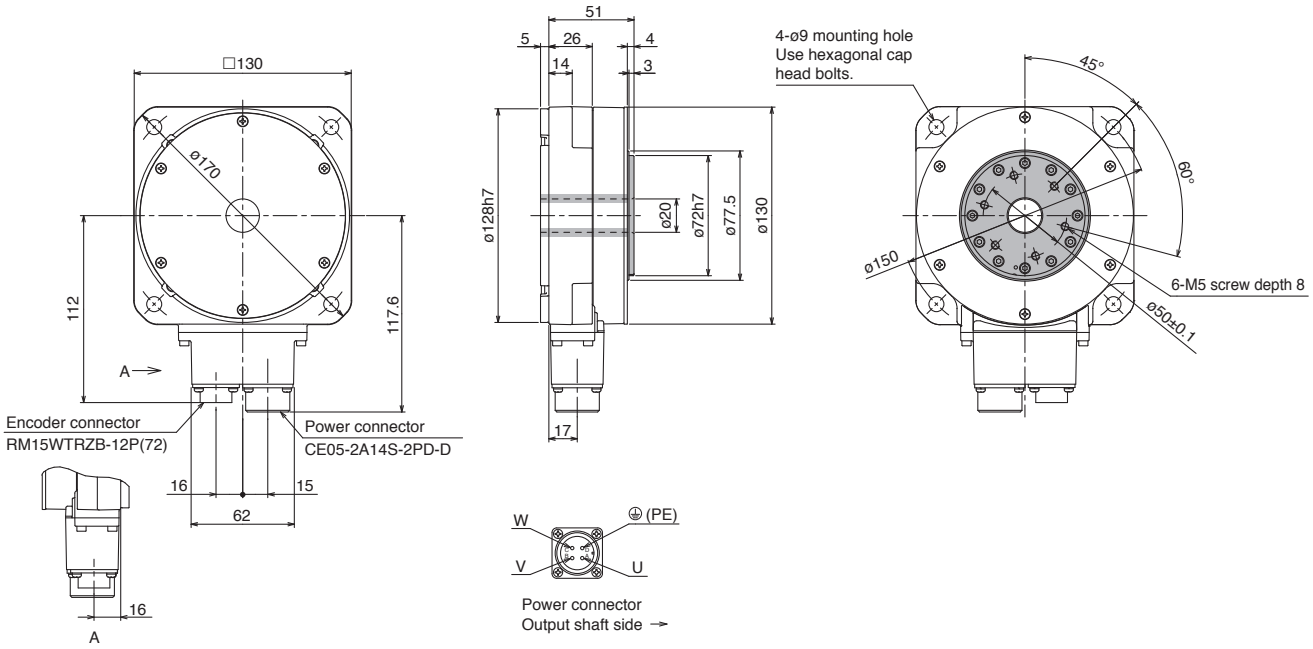

[Unit: mm]

●TM-RG2M004E30

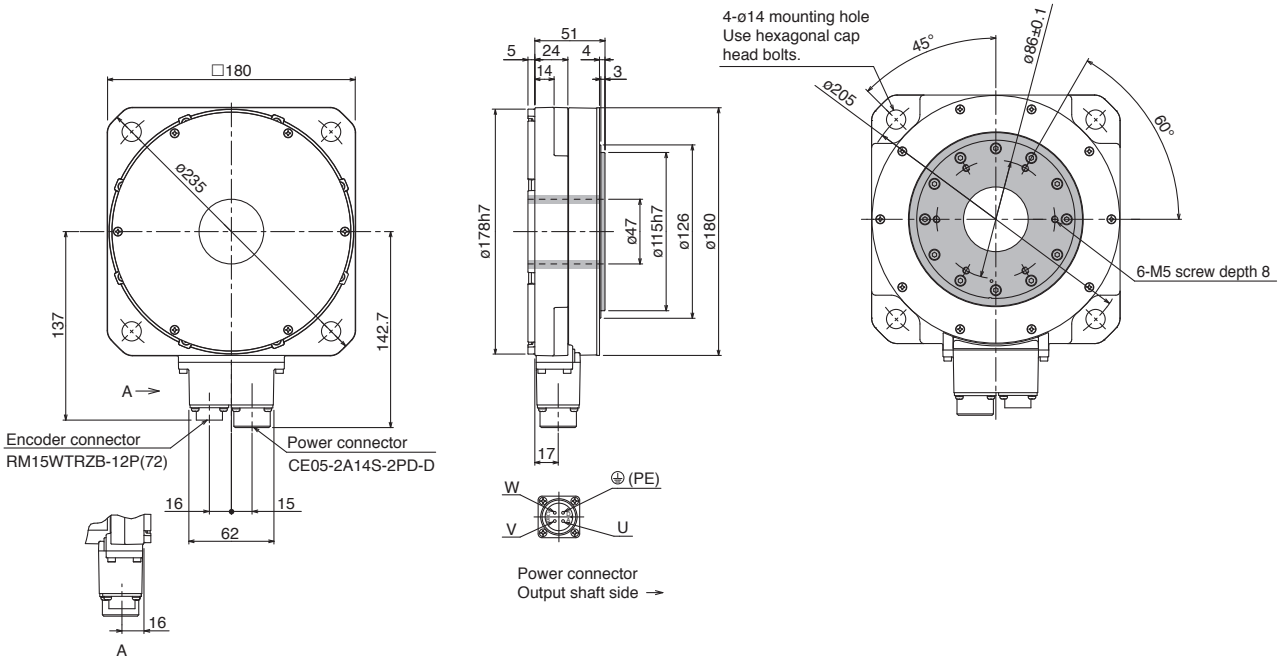

[Unit: mm]

Notes: 1. For dimensions without tolerance, general tolerance applies.
2. ▒ indicates rotor.

TM-RG2M Series Dimensions (Note 1, 2)

●TM-RG2M009G30

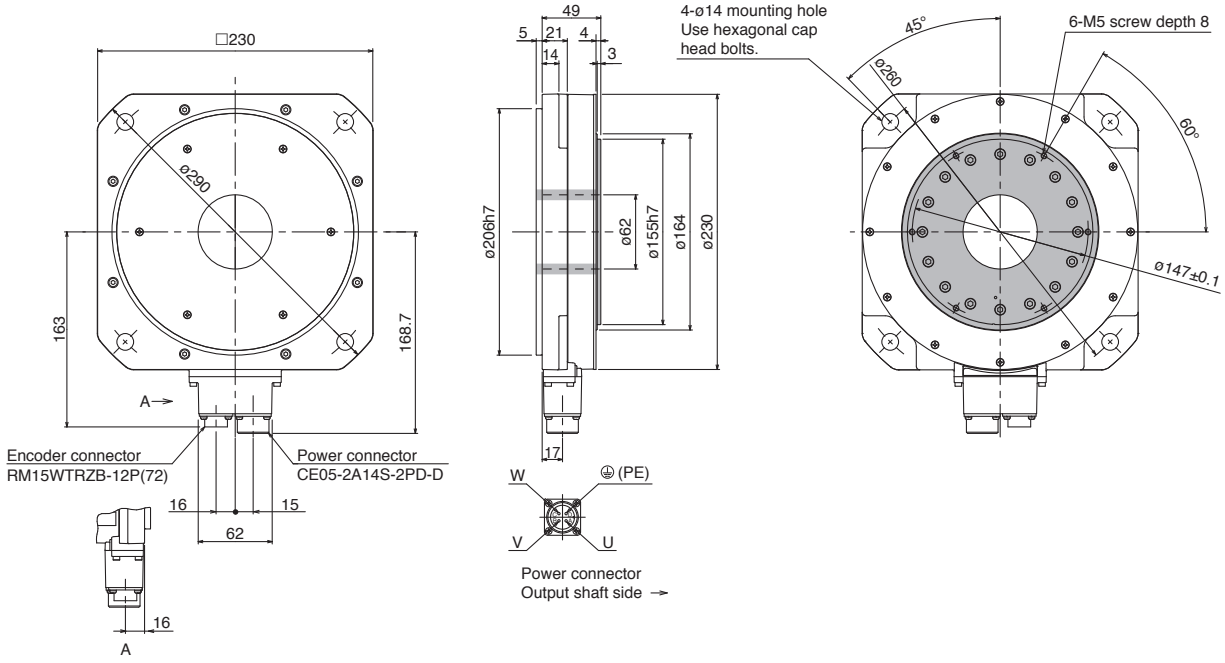

[Unit: mm]

Notes: 1. For dimensions without tolerance, general tolerance applies.
2. ▭ indicates rotor.

TM-RU2M Series Dimensions (Note 1, 2)

●TM-RU2M002C30

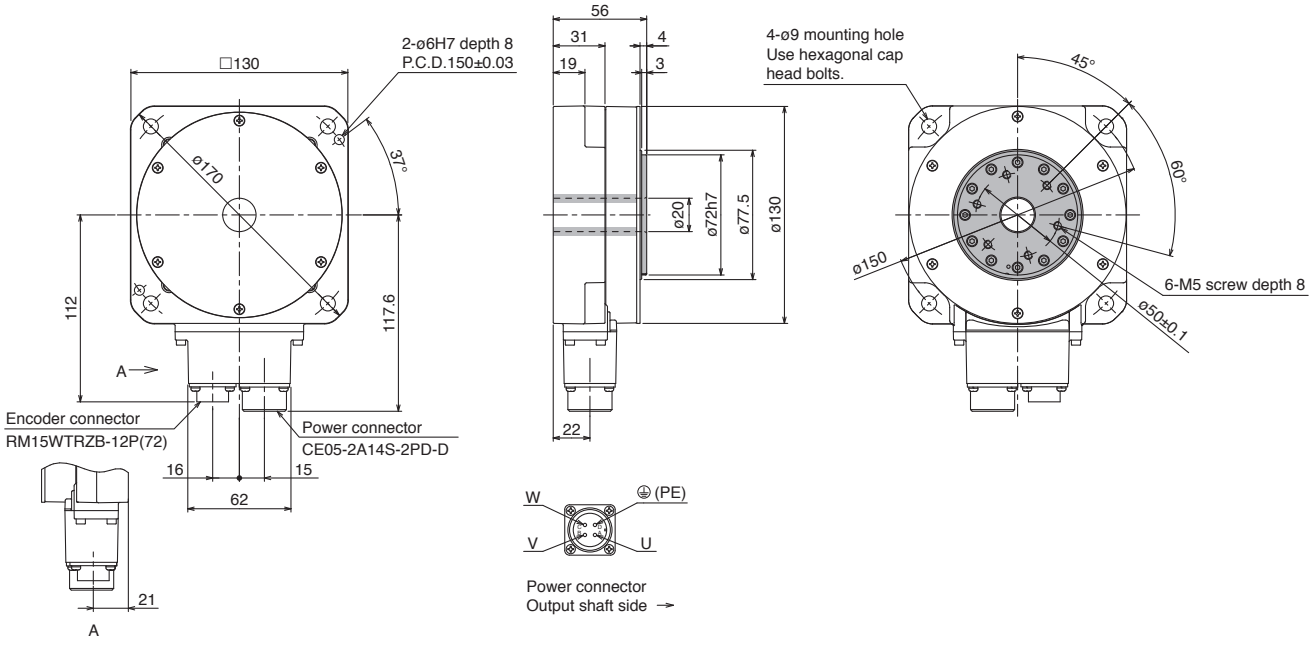

[Unit: mm]

●TM-RU2M004E30

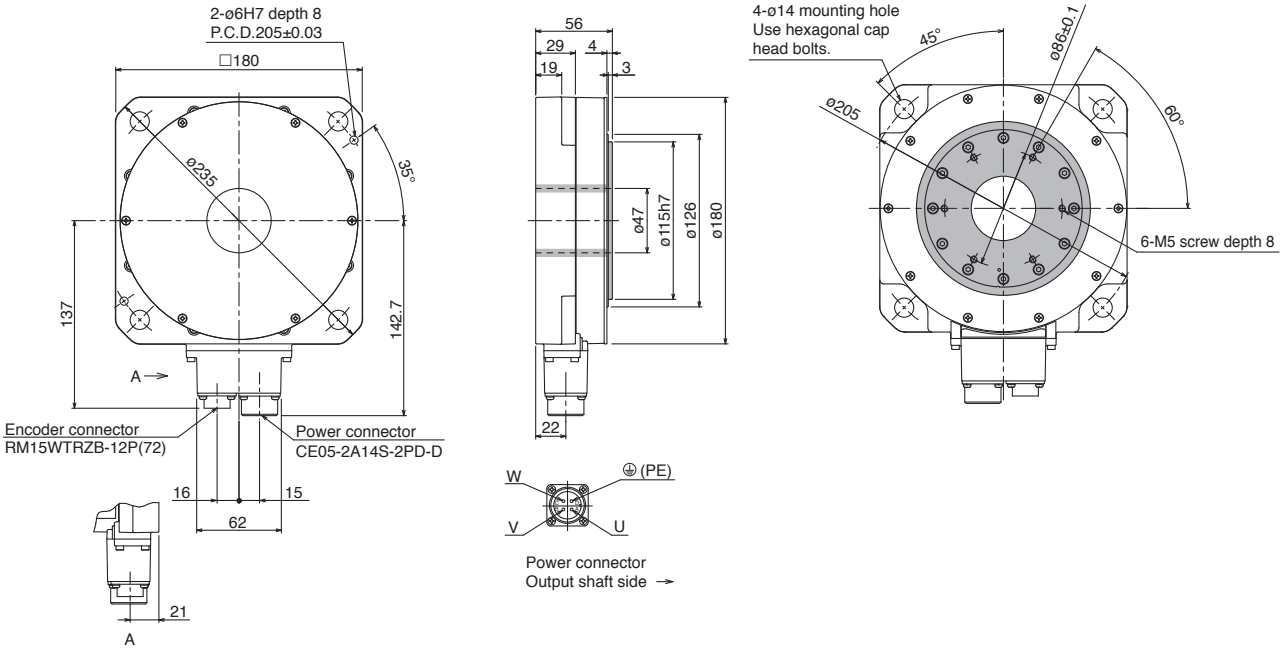

[Unit: mm]

Notes: 1. For dimensions without tolerance, general tolerance applies.
2. indicates rotor.

TM-RU2M Series Dimensions (Note 1, 2)

●TM-RU2M009G30

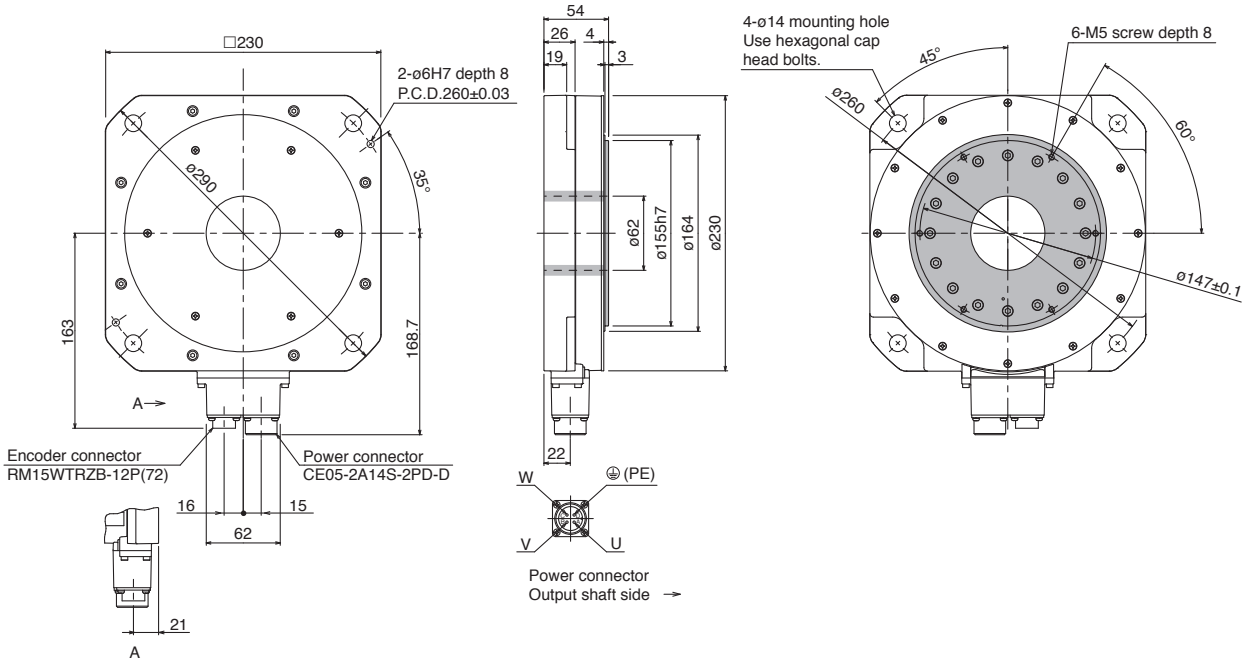

[Unit: mm]

Notes: 1. For dimensions without tolerance, general tolerance applies.
2. ▭ indicates rotor.

TM-RFM Series Dimensions (Note 1, 2)

●TM-RFM002C20, TM-RFM004C20, TM-RFM006C20

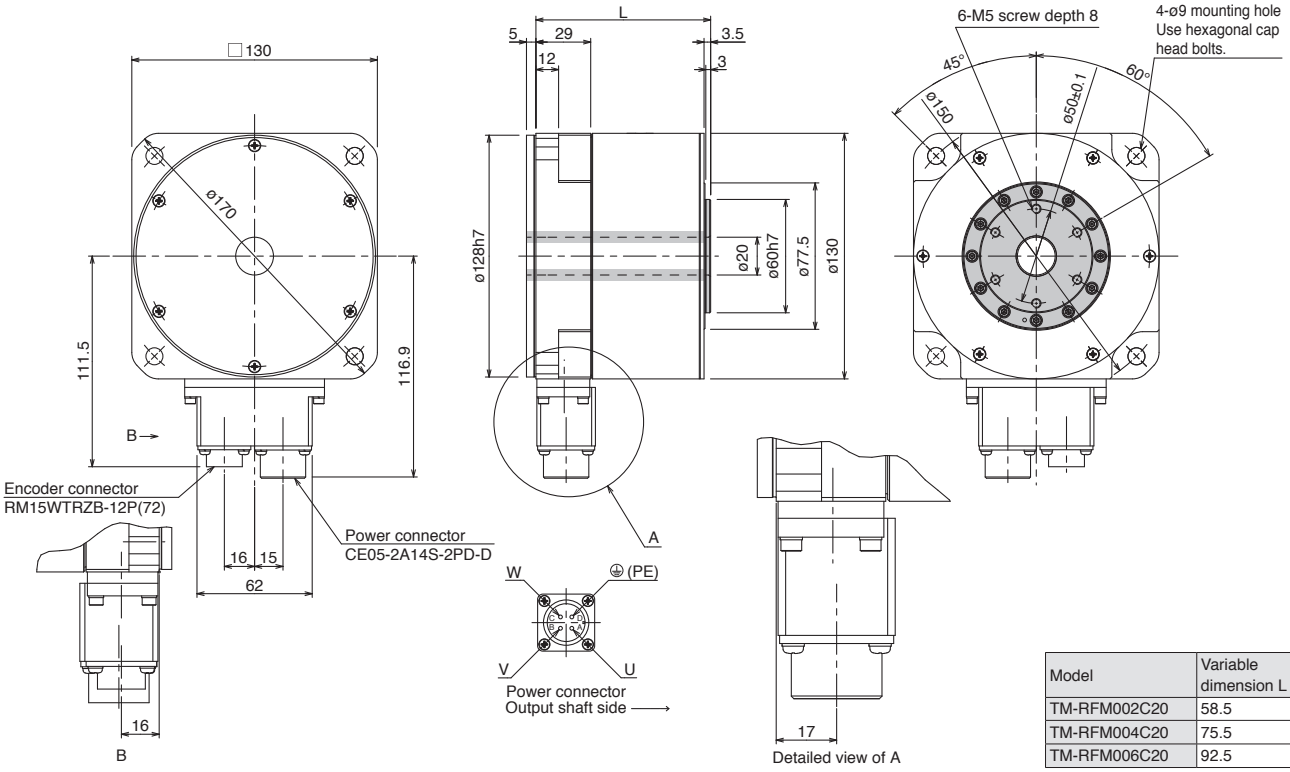

Model	Variable dimension L
TM-RFM002C20	58.5
TM-RFM004C20	75.5
TM-RFM006C20	92.5

[Unit: mm]

●TM-RFM006E20, TM-RFM012E20, TM-RFM018E20

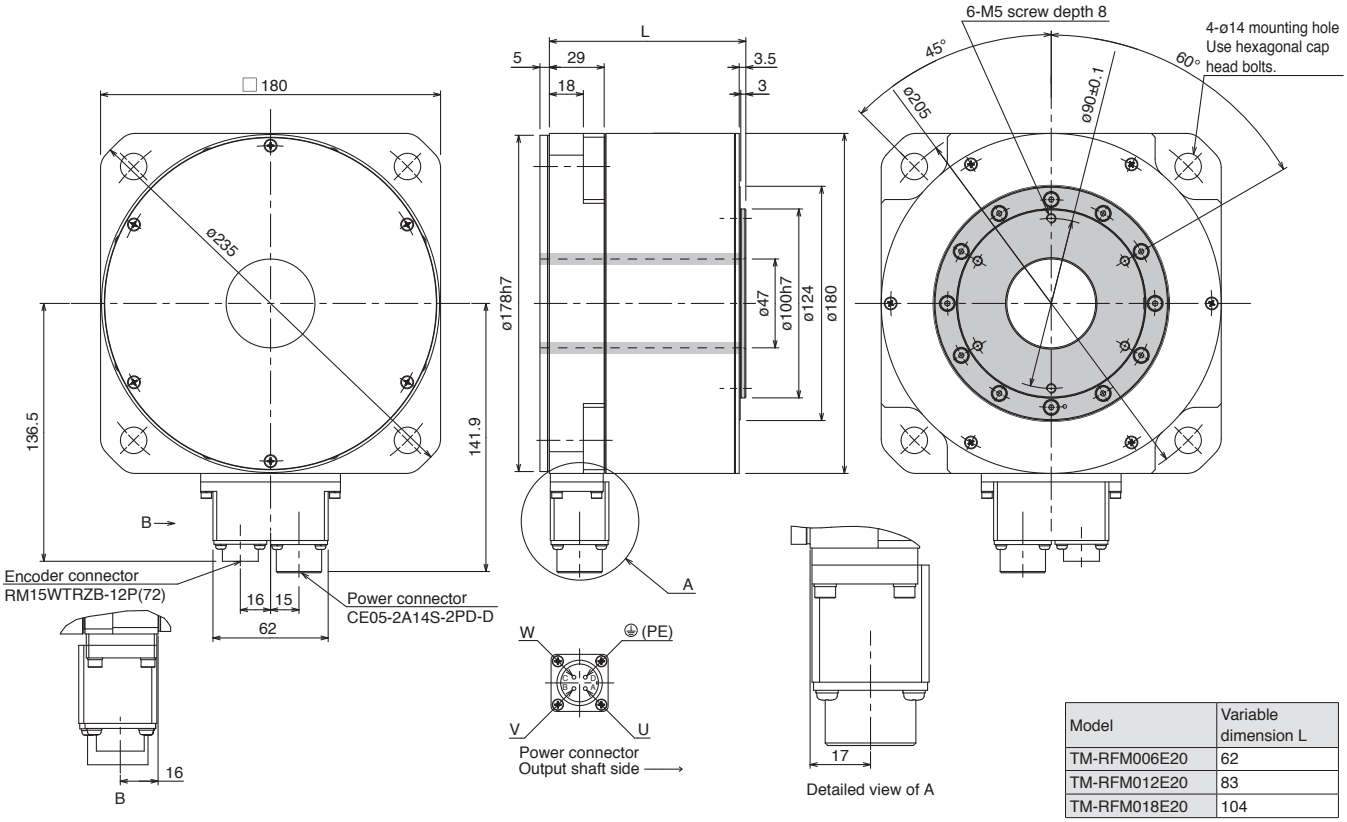

Model	Variable dimension L
TM-RFM006E20	62
TM-RFM012E20	83
TM-RFM018E20	104

[Unit: mm]

Notes: 1. For dimensions without tolerance, general tolerance applies. The actual dimensions may be 1 mm to 3 mm larger than the dimensions indicated. Make allowances for the tolerance when designing a machine.
2. ▒ indicates rotor.

TM-RFM Series Dimensions (Note 1, 2)

●TM-RFM012G20, TM-RFM048G20, TM-RFM072G20

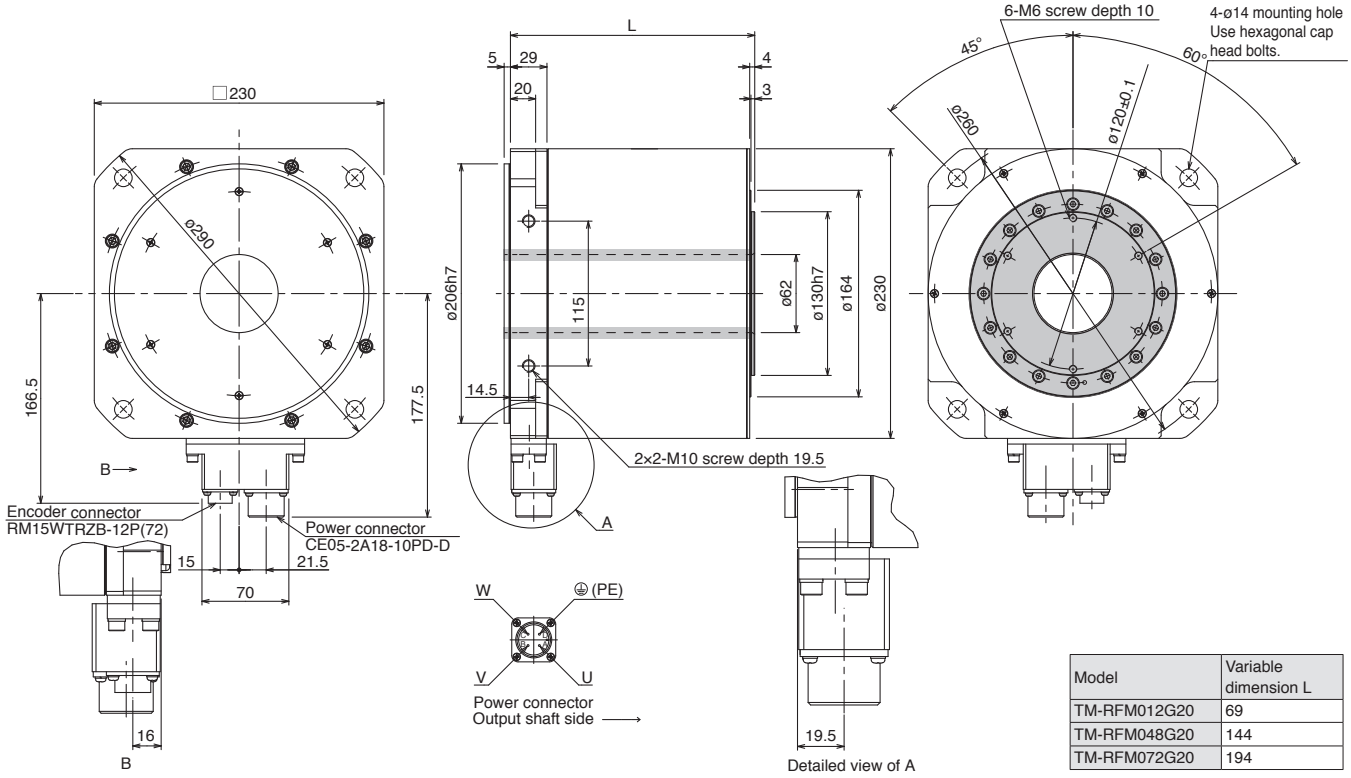

Model	Variable dimension L
TM-RFM012G20	69
TM-RFM048G20	144
TM-RFM072G20	194

[Unit: mm]

●TM-RFM040J10, TM-RFM120J10

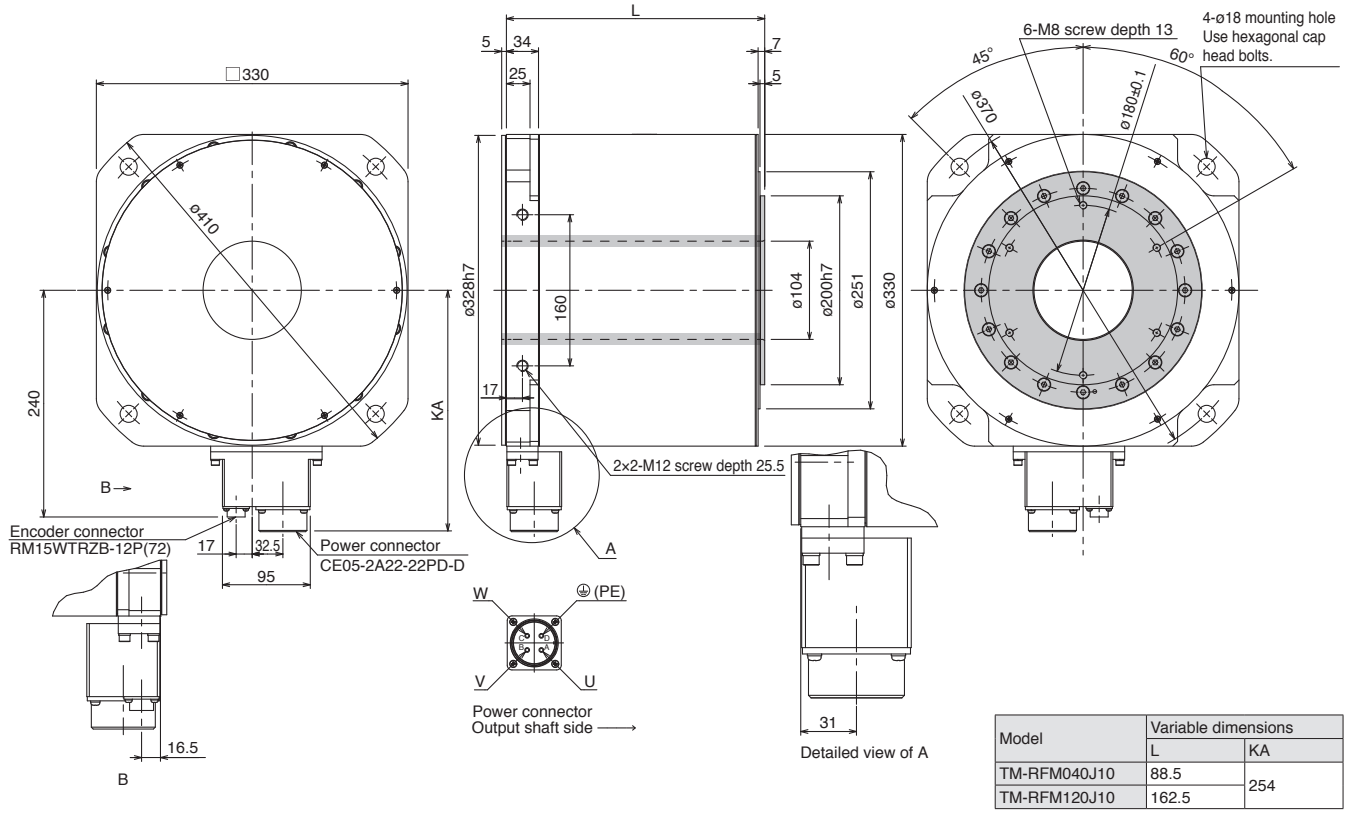

Model	Variable dimensions	
	L	KA
TM-RFM040J10	88.5	254
TM-RFM120J10	162.5	

[Unit: mm]

Notes: 1. For dimensions without tolerance, general tolerance applies. The actual dimensions may be 1 mm to 3 mm larger than the dimensions indicated. Make allowances for the tolerance when designing a machine.
2. ▭ indicates rotor.

MEMO

7 Options/Peripheral Equipment

	Servo amplifier					
	G	G-RJ	WG	A	A-RJ	● : Applicable
Introducing MELSERVO Model Selection Tool	●	●	●	●	●	 7-2
Cable/Connector Selection Table for Servo Motors	●	●	●	●	●	 7-2
Configuration Example for Servo Motors	●	●	●	●	●	 7-4
Details of Option Connectors for Servo Motors	●	●	●	●	●	 7-16
Products on the Market for Servo Motors	●	●	●	●	●	 7-20
Configuration Example for MR-J5-_G(-RJ)/MR-J5W2-_G/MR-J5W3-_G	●	●	●			 7-25
Configuration Example for MR-J5-_A(-RJ)				●	●	 7-27
Configuration Example for MR-CM	●	●	●	●	●	 7-30
Details of Option Connectors for Servo Amplifiers/MR-CM	●	●	●	●	●	 7-31
Products on the Market for Servo Amplifiers	●	●	●	●	●	 7-34
Regenerative Option	●	●	●	●	●	 7-37
Simple Converter	●	●	●	●	●	 7-40
Battery	●	●	●	●	●	 7-42
Battery Case and Battery	●	●	●	●	●	 7-43
Absolute Position Storage Unit	●	●	●	●	●	 7-44
Replacement Fan Unit	●	●	●	●	●	 7-44
Junction Terminal Block	●	●	●	●	●	 7-45
Radio Noise Filter/Line Noise Filter/Data Line Filter	●	●	●	●	●	 7-47
Surge Killer/Surge Protector	●	●	●	●	●	 7-47
EMC Filter	●	●	●	●	●	 7-48
Power Factor Improving Reactor	●	●	●	●	●	 7-50
Servo Support Software	●	●	●	●	●	 7-53
Unit Conversion Table	●	●	●	●	●	 7-55

G MR-J5-G **G-RJ** MR-J5-G-RJ **WG** MR-J5W2-G/MR-J5W3-G **A** MR-J5-A **A-RJ** MR-J5-A-RJ

* Only MR-J5-G and MR-J5-A are mentioned for the 1-axis servo amplifiers in this section. Note that options necessary for servo amplifiers with special specifications are the same as those for standard servo amplifiers. Refer to the servo amplifiers with the same rated capacity.
* MR-J5-G-RJ and MR-J5-A-RJ are planned for a future release.
* Refer to p. 7-55 in this catalog for conversion of units.

Introducing MELSERVO Model Selection Tool

Model Selection tool is now available for supporting you to select options such as encoder cables and power cables which are required to use with controllers, servo motors, servo amplifiers, and regenerative options of your choice.

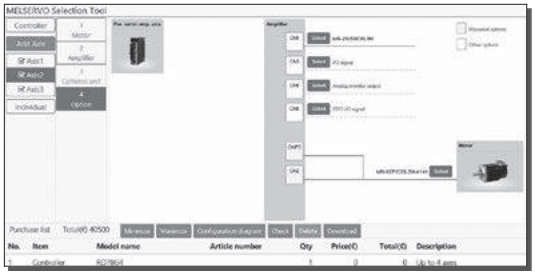

Cable/Connector Selection Table for Servo Motors

Necessary option cables and connectors vary depending on the servo motor series.
Refer to the following tables for necessary options.

Cables for HK-KT servo motors

Cable type	Cable length	IP rating (Note 1)	Electromagnetic brake wires	Cable direction	Bending life	Model	Reference
Dual cable type	10 m or shorter (direct connection type)	IP65 (Note 3)	Available	In direction of load side	Long bending life	MR-AEPB2CBL_M-A1-H	p. 7-5
					Standard	MR-AEPB2CBL_M-A1-L	
				In opposite direction of load side	Long bending life	MR-AEPB2CBL_M-A2-H	
					Standard	MR-AEPB2CBL_M-A2-L	
			Not available	In direction of load side	Long bending life	MR-AEP2CBL_M-A1-H	
					Standard	MR-AEP2CBL_M-A1-L	
				In opposite direction of load side	Long bending life	MR-AEP2CBL_M-A2-H	
					Standard	MR-AEP2CBL_M-A2-L	
	Over 10 m (junction type) (Note 2)	IP20	Available	In direction of load side	Long bending life	MR-AEPB2J10CBL03M-A1-L, MR-AEKCBL_M-H	p. 7-6
					Standard	MR-AEPB2J10CBL03M-A1-L, MR-AEKCBL_M-L	
				In opposite direction of load side	Long bending life	MR-AEPB2J10CBL03M-A2-L, MR-AEKCBL_M-H	
					Standard	MR-AEPB2J10CBL03M-A2-L, MR-AEKCBL_M-L	
			Not available	In direction of load side	Long bending life	MR-AEP2J10CBL03M-A1-L, MR-AEKCBL_M-H	
					Standard	MR-AEP2J10CBL03M-A1-L, MR-AEKCBL_M-L	
				In opposite direction of load side	Long bending life	MR-AEP2J10CBL03M-A2-L, MR-AEKCBL_M-H	
					Standard	MR-AEP2J10CBL03M-A2-L, MR-AEKCBL_M-L	
		IP65 (Note 3)	Available	In direction of load side	Long bending life	MR-AEPB2J20CBL03M-A1-L, MR-AENSCBL_M-H	p. 7-7
					Standard	MR-AEPB2J20CBL03M-A1-L, MR-AENSCBL_M-L	
				In opposite direction of load side	Long bending life	MR-AEPB2J20CBL03M-A2-L, MR-AENSCBL_M-H	
					Standard	MR-AEPB2J20CBL03M-A2-L, MR-AENSCBL_M-L	
			Not available	In direction of load side	Long bending life	MR-AEP2J20CBL03M-A1-L, MR-AENSCBL_M-H	
					Standard	MR-AEP2J20CBL03M-A1-L, MR-AENSCBL_M-L	
				In opposite direction of load side	Long bending life	MR-AEP2J20CBL03M-A2-L, MR-AENSCBL_M-H	
					Standard	MR-AEP2J20CBL03M-A2-L, MR-AENSCBL_M-L	
Single cable type	10 m or shorter (direct connection type)	IP65 (Note 3)	Available	In direction of load side	Long bending life	MR-AEPB1CBL_M-A1-H	p. 7-8
					Standard	MR-AEPB1CBL_M-A1-L	
				In opposite direction of load side	Long bending life	MR-AEPB1CBL_M-A2-H	
					Standard	MR-AEPB1CBL_M-A2-L	
			Not available	In direction of load side	Long bending life	MR-AEP1CBL_M-A1-H	
					Standard	MR-AEP1CBL_M-A1-L	
				In opposite direction of load side	Long bending life	MR-AEP1CBL_M-A2-H	
					Standard	MR-AEP1CBL_M-A2-L	

Notes: 1. The IP rating indicated is for the connector's protection against ingress of dust and water when coupled to a servo motor. If the IP rating of the servo motor differs from that of these connectors, overall IP rating depends on the lowest of all.
2. The two types of cables indicated are required.
3. When IP67 cables are required, please contact Mitsubishi Electric System & Service Co., Ltd. OVERSEAS SERVICE SECTION. (Email: osb.webmaster@melsc.jp)

Cable/Connector Selection Table for Servo Motors

Cables for HK-ST servo motors

Application	Compatible servo motor	IP rating (Note 1)	Bending life	Length	Model	Reference
Encoder	HK-ST series	IP67	Long bending life	2 m to 10 m	MR-J3ENSCBL_M-H	p. 7-7
				20 m to 50 m	MR-AENSCBL_M-H	
			Standard	2 m to 10 m	MR-J3ENSCBL_M-L	
				20 m to 30 m	MR-AENSCBL_M-L	

Connectors for HK-ST servo motors

Application	Compatible servo motor	IP rating (Note 1)	Connector shape	Type of connection	Model (Note 2)	Reference
Encoder	HK-ST series	IP67	Straight	One-touch	MR-J3SCNS	p. 7-7
				Screw	MR-ENCNS2	p. 7-9
			Angle	One-touch	MR-J3SCNSA	
				Screw	MR-ENCNS2A	
Power supply	HK-ST52(4)W, 102(4)W, 172(4)W, 202(4)AW, 302(4)W	IP67	Straight	One-touch	MR-APWCNS4	
	HK-ST202(4)W, 352(4)W, 5024W			One-touch	MR-APWCNS5	
Electromagnetic brake	HK-ST series	IP67	Straight	One-touch	MR-BKCNS1	
				Screw	MR-BKCNS2	
			Angle	One-touch	MR-BKCNS1A	
				Screw	MR-BKCNS2A	

Notes: 1. The IP rating indicated is for the connector's protection against ingress of dust and water when coupled to a servo motor. If the IP rating of the servo motor differs from that of these connectors, overall IP rating depends on the lowest of all.
2. Use the option connector set indicated to fabricate a cable.

Configuration Example for Rotary Servo Motors (Note 3)

G | G-RJ | WG | A | A-RJ

HK-KT series (Cable direction: load side/opposite to load side) (Note 1)

●Cable length of 10 m or shorter

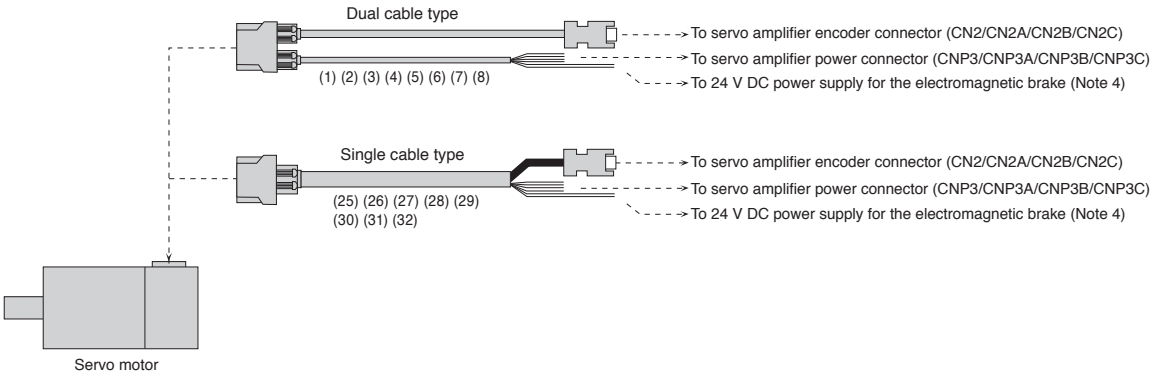

●Cable length of over 10 m

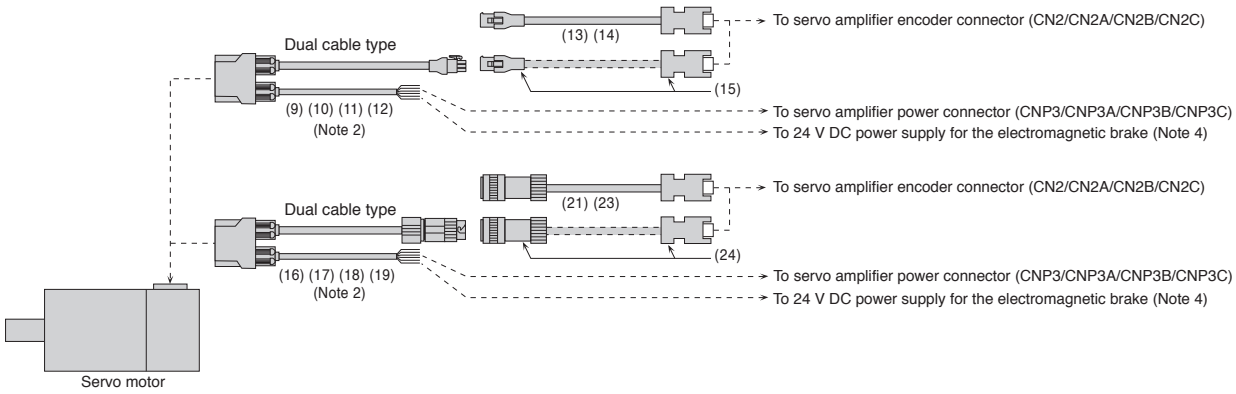

HK-ST series

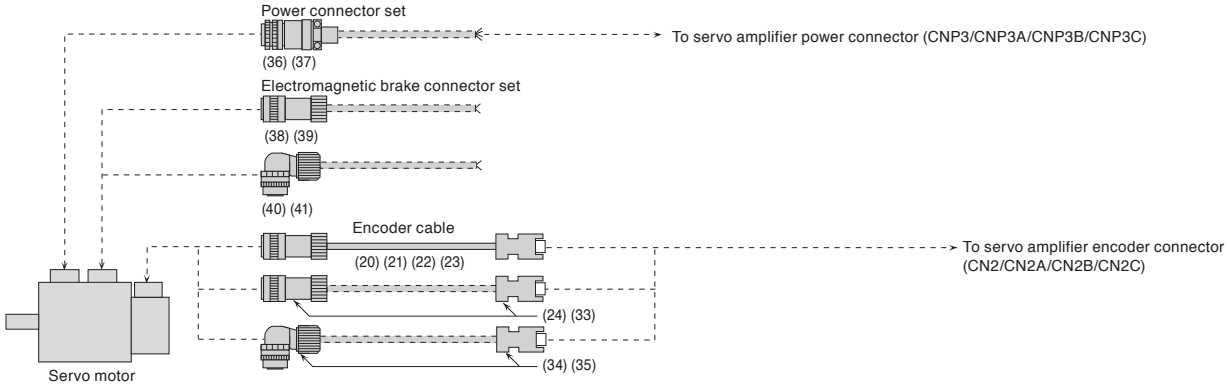

Notes: 1. Cables for leading out either in direction of load side or opposite to load side are available.
2. Secure this cable as it does not have a long bending life.
3. Cables drawn with dashed lines need to be fabricated by user. Refer to "Rotary Servo Motor User's Manual" for fabricating the cables.
4. This is for servo motors with an electromagnetic brake.

Cables and Connectors for Rotary Servo Motors

Refer to "Details of Option Connectors for Servo Motors" in this catalog for the detailed models.
Encoder cables are not subject to European Low Voltage Directive (50 V AC to 1000 V AC and 75 V DC to 1500 V DC).

No.	Item	Application	Bending life	Cable length	Model	Description/IP rating (Note 1)
(1)	Motor cable (Note 2, 3) (dual cable type/ direct connection type for 10 m or shorter)	For HK-KT Load-side lead With electromagnetic brake wires	Long bending life	2 m	MR-AEPB2CBL2M-A1-H	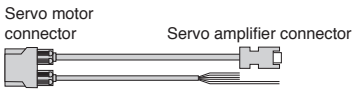 IP65
				5 m	MR-AEPB2CBL5M-A1-H	
				10 m	MR-AEPB2CBL10M-A1-H	
(2)			Standard	2 m	MR-AEPB2CBL2M-A1-L	
				5 m	MR-AEPB2CBL5M-A1-L	
				10 m	MR-AEPB2CBL10M-A1-L	
(3)		For HK-KT Opposite to load-side lead With electromagnetic brake wires	Long bending life	2 m	MR-AEPB2CBL2M-A2-H	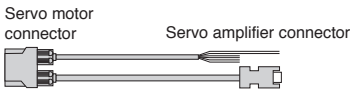 IP65
				5 m	MR-AEPB2CBL5M-A2-H	
				10 m	MR-AEPB2CBL10M-A2-H	
(4)			Standard	2 m	MR-AEPB2CBL2M-A2-L	
				5 m	MR-AEPB2CBL5M-A2-L	
				10 m	MR-AEPB2CBL10M-A2-L	
(5)		For HK-KT Load-side lead Without electromagnetic brake wires	Long bending life	2 m	MR-AEP2CBL2M-A1-H	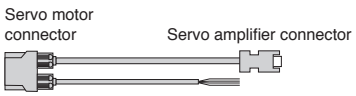 IP65
				5 m	MR-AEP2CBL5M-A1-H	
				10 m	MR-AEP2CBL10M-A1-H	
(6)			Standard	2 m	MR-AEP2CBL2M-A1-L	
				5 m	MR-AEP2CBL5M-A1-L	
				10 m	MR-AEP2CBL10M-A1-L	
(7)		For HK-KT Opposite to load-side lead Without electromagnetic brake wires	Long bending life	2 m	MR-AEP2CBL2M-A2-H	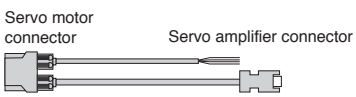 IP65
				5 m	MR-AEP2CBL5M-A2-H	
				10 m	MR-AEP2CBL10M-A2-H	
(8)			Standard	2 m	MR-AEP2CBL2M-A2-L	
				5 m	MR-AEP2CBL5M-A2-L	
				10 m	MR-AEP2CBL10M-A2-L	

Notes: 1. The IP rating indicated is for the connector's protection against ingress of dust and water when coupled to a servo motor. If the IP rating of the servo motor differs from that of these connectors, overall IP rating depends on the lowest of all.
2. For unlisted lengths of the cables, please contact Mitsubishi Electric System & Service Co., Ltd. OVERSEAS SERVICE SECTION. (Email: osb.webmaster@melsc.jp)
3. When IP67 cables are required, please contact Mitsubishi Electric System & Service Co., Ltd. OVERSEAS SERVICE SECTION. (Email: osb.webmaster@melsc.jp)

Cables and Connectors for Rotary Servo Motors

Refer to "Details of Option Connectors for Servo Motors" in this catalog for the detailed models.
Encoder cables are not subject to European Low Voltage Directive (50 V AC to 1000 V AC and 75 V DC to 1500 V DC).

No.	Item	Application	Bending life	Cable length	Model	Description/IP rating (Note 1)
(9)	Motor cable (Note 3, 5) (dual cable type/ junction type for over 10 m)	For HK-KT Load-side lead With electromagnetic brake wires	Standard	0.3 m	MR-AEPB2J10CBL03M-A1-L	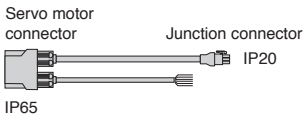
(10)		For HK-KT Opposite to load-side lead With electromagnetic brake wires	Standard	0.3 m	MR-AEPB2J10CBL03M-A2-L	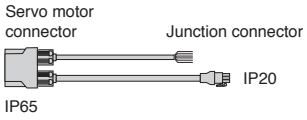
(11)		For HK-KT Load-side lead Without electromagnetic brake wires	Standard	0.3 m	MR-AEP2J10CBL03M-A1-L	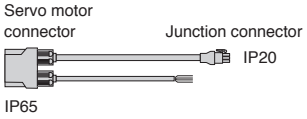
(12)		For HK-KT Opposite to load-side lead Without electromagnetic brake wires	Standard	0.3 m	MR-AEP2J10CBL03M-A2-L	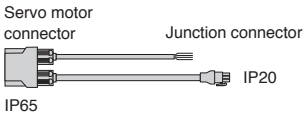
(13)	Encoder cable (Note 4, 5)	For HK-KT	Long bending life	20 m	MR-AEKCBL20M-H	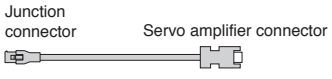
				30 m	MR-AEKCBL30M-H	
				40 m	MR-AEKCBL40M-H	
				50 m	MR-AEKCBL50M-H	
(14)			Standard	20 m	MR-AEKCBL20M-L	
				30 m	MR-AEKCBL30M-L	
(15)	Encoder connector set (Note 2, 4)	For HK-KT	-	-	MR-ECNM	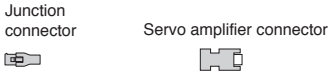 Applicable cable Wire size: 0.3 mm^2 (AWG 22) Cable OD: 8.2 mm

Notes: 1. The IP rating indicated is for the connector's protection against ingress of dust and water when coupled to a servo motor. If the IP rating of the servo motor differs from that of these connectors, overall IP rating depends on the lowest of all.
2. The crimping tool (91529-1) manufactured by TE Connectivity Ltd. Company is required. Contact the manufacturer directly.
3. Use this cable in combination with an option from (13) to (15).
4. Use this cable or connector set in combination with an option from (9) to (12).
5. For unlisted lengths of the cables, please contact Mitsubishi Electric System & Service Co., Ltd. OVERSEAS SERVICE SECTION. (Email: osb.webmaster@melsc.jp)

Cables and Connectors for Rotary Servo Motors

Refer to "Details of Option Connectors for Servo Motors" in this catalog for the detailed models.
Encoder cables are not subject to European Low Voltage Directive (50 V AC to 1000 V AC and 75 V DC to 1500 V DC).

No.	Item	Application	Bending life	Cable length	Model	Description/IP rating (Note 1)
(16)	Motor cable (Note 4, 6, 7) (dual cable type/ junction type for over 10 m)	For HK-KT Load-side lead With electromagnetic brake wires	Standard	0.3 m	MR-AEPB2J20CBL03M-A1-L	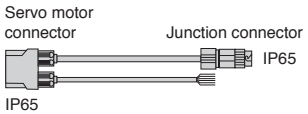
(17)		For HK-KT Opposite to load-side lead With electromagnetic brake wires	Standard	0.3 m	MR-AEPB2J20CBL03M-A2-L	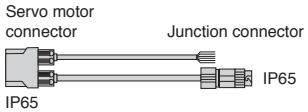
(18)		For HK-KT Load-side lead Without electromagnetic brake wires	Standard	0.3 m	MR-AEP2J20CBL03M-A1-L	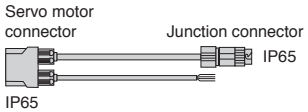
(19)		For HK-KT Opposite to load-side lead Without electromagnetic brake wires	Standard	0.3 m	MR-AEP2J20CBL03M-A2-L	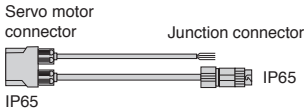
(20)	Encoder cable (Note 5, 6)	For HK-ST	Long bending life	2 m	MR-J3ENSCBL2M-H	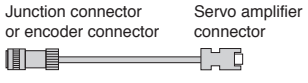
				5 m	MR-J3ENSCBL5M-H	
				10 m	MR-J3ENSCBL10M-H	
(21)		For HK-KT/HK-ST		20 m	MR-AENSCBL20M-H	
				30 m	MR-AENSCBL30M-H	
				40 m	MR-AENSCBL40M-H	
				50 m	MR-AENSCBL50M-H	
(22)		For HK-ST	Standard	2 m	MR-J3ENSCBL2M-L	
				5 m	MR-J3ENSCBL5M-L	
				10 m	MR-J3ENSCBL10M-L	
(23)		For HK-KT/HK-ST		20 m	MR-AENSCBL20M-L	
				30 m	MR-AENSCBL30M-L	
(24)	Encoder connector set (Note 2, 3, 5) (one-touch connection type)	For HK-KT/HK-ST	-	-	MR-J3SCNS	 Applicable cable Wire size: 0.5 mm² (AWG 20) or smaller Cable OD: 5.5 mm to 9.0 mm

Notes:
1. The IP rating indicated is for the connector's protection against ingress of dust and water when coupled to a servo motor. If the IP rating of the servo motor differs from that of these connectors, overall IP rating depends on the lowest of all.
2. Cable clamps and bushings for cable OD of 5.5 mm to 7.5 mm and of 7.0 mm to 9.0 mm are included in the set.
3. The connector set contains a plug and contacts. Using contacts for other plugs may damage the connector. Use the enclosed contacts.
4. Use this cable in combination with (21), (23), or (24).
5. When using this cable or connector set for HK-KT series, use it in combination with an option from (16) to (19).
6. For unlisted lengths of the cables, please contact Mitsubishi Electric System & Service Co., Ltd. OVERSEAS SERVICE SECTION. (Email: osb.webmaster@melsc.jp)
7. When IP67 cables are required, please contact Mitsubishi Electric System & Service Co., Ltd. OVERSEAS SERVICE SECTION. (Email: osb.webmaster@melsc.jp)

Cables and Connectors for Rotary Servo Motors

Refer to "Details of Option Connectors for Servo Motors" in this catalog for the detailed models.

No.	Item	Application	Bending life	Cable length	Model	Description/IP rating (Note 1)
(25)	Motor cable (Note 2, 3) (single cable type/ direct connection type for 10 m or shorter)	For HK-KT Load-side lead With electromagnetic brake wires	Long bending life	2 m	MR-AEPB1CBL2M-A1-H	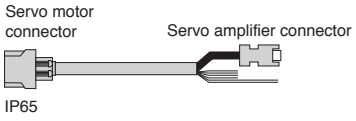
				5 m	MR-AEPB1CBL5M-A1-H	
				10 m	MR-AEPB1CBL10M-A1-H	
(26)			Standard	2 m	MR-AEPB1CBL2M-A1-L	
				5 m	MR-AEPB1CBL5M-A1-L	
				10 m	MR-AEPB1CBL10M-A1-L	
(27)		For HK-KT Opposite to load-side lead With electromagnetic brake wires	Long bending life	2 m	MR-AEPB1CBL2M-A2-H	
				5 m	MR-AEPB1CBL5M-A2-H	
				10 m	MR-AEPB1CBL10M-A2-H	
(28)			Standard	2 m	MR-AEPB1CBL2M-A2-L	
				5 m	MR-AEPB1CBL5M-A2-L	
				10 m	MR-AEPB1CBL10M-A2-L	
(29)		For HK-KT Load-side lead Without electromagnetic brake wires	Long bending life	2 m	MR-AEP1CBL2M-A1-H	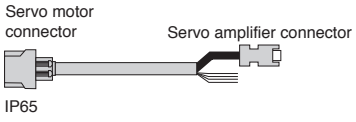
				5 m	MR-AEP1CBL5M-A1-H	
				10 m	MR-AEP1CBL10M-A1-H	
(30)			Standard	2 m	MR-AEP1CBL2M-A1-L	
				5 m	MR-AEP1CBL5M-A1-L	
				10 m	MR-AEP1CBL10M-A1-L	
(31)		For HK-KT Opposite to load-side lead Without electromagnetic brake wires	Long bending life	2 m	MR-AEP1CBL2M-A2-H	
				5 m	MR-AEP1CBL5M-A2-H	
				10 m	MR-AEP1CBL10M-A2-H	
(32)			Standard	2 m	MR-AEP1CBL2M-A2-L	
				5 m	MR-AEP1CBL5M-A2-L	
				10 m	MR-AEP1CBL10M-A2-L	

Notes: 1. The IP rating indicated is for the connector's protection against ingress of dust and water when coupled to a servo motor. If the IP rating of the servo motor differs from that of these connectors, overall IP rating depends on the lowest of all.
2. For unlisted lengths of the cables, please contact Mitsubishi Electric System & Service Co., Ltd. OVERSEAS SERVICE SECTION. (Email: osb.webmaster@melsc.jp)
3. When IP67 cables are required, please contact Mitsubishi Electric System & Service Co., Ltd. OVERSEAS SERVICE SECTION. (Email: osb.webmaster@melsc.jp)

Cables and Connectors for Rotary Servo Motors

Refer to "Details of Option Connectors for Servo Motors" in this catalog for the detailed models.

No.	Item	Application	Bending life	Cable length	Model	Description/IP rating (Note 1)
(33)	Encoder connector set (Note 2, 3, 4) (screw type)	For HK-ST (straight type)	-	-	MR-ENCNS2	Encoder connector Servo amplifier connector  IP67 Applicable cable Wire size: 0.5 mm² (AWG 20) or smaller Cable OD: 5.5 mm to 9.0 mm
(34)	Encoder connector set (Note 2, 3, 4) (one-touch connection type)	For HK-ST (angle type)	-	-	MR-J3SCNSA	Encoder connector Servo amplifier connector  IP67 Applicable cable Wire size: 0.5 mm² (AWG 20) or smaller Cable OD: 5.5 mm to 9.0 mm
(35)	Encoder connector set (Note 2, 3, 4) (screw type)	For HK-ST (angle type)	-	-	MR-ENCNS2A	
(36)	Power connector set (Note 4, 5) (one-touch connection type)	HK-ST52(4)W, 102(4)W, 172(4)W, 202(4)AW, 302(4)W	-	-	MR-APWCNS4	Power connector  IP67 Applicable cable Wire size: 2 mm² to 3.5 mm² (AWG 14 to 12) Cable OD: 10.5 mm to 14.1 mm
(37)	Power connector set (Note 4, 5) (one-touch connection type)	HK-ST202(4)W, 352(4)W, 5024W	-	-	MR-APWCNS5	Power connector  IP67 Applicable cable Wire size: 5.5 mm² to 8 mm² (AWG 10 to 8) Cable OD: 12.5 mm to 16 mm
(38)	Electromagnetic brake connector set (Note 3, 4) (one-touch connection type)	For HK-ST (straight type)	-	-	MR-BKCNS1	Electromagnetic brake connector  IP67 Applicable cable Wire size: 1.25 mm² (AWG 16) or smaller Cable OD: 9.0 mm to 11.6 mm
(39)	Electromagnetic brake connector set (Note 3, 4) (screw type)		-	-	MR-BKCNS2	
(40)	Electromagnetic brake connector set (Note 3, 4) (one-touch connection type)	For HK-ST (angle type)	-	-	MR-BKCNS1A	Electromagnetic brake connector  IP67 Applicable cable Wire size: 1.25 mm² (AWG 16) or smaller Cable OD: 9.0 mm to 11.6 mm
(41)	Electromagnetic brake connector set (Note 3, 4) (screw type)		-	-	MR-BKCNS2A	

Notes: 1. The IP rating indicated is for the connector's protection against ingress of dust and water when coupled to a servo motor. If the IP rating of the servo motor differs from that of these connectors, overall IP rating depends on the lowest of all.
2. Cable clamps and bushings for cable OD of 5.5 mm to 7.5 mm and of 7.0 mm to 9.0 mm are included in the set.
3. The connector set contains a plug and contacts. Using contacts for other plugs may damage the connector. Use the enclosed contacts.
4. For fabricating cables with these connectors, please contact Mitsubishi Electric System & Service Co., Ltd. OVERSEAS SERVICE SECTION. (Email: osb.webmaster@melsc.jp)
5. When the screw type is required, refer to "Products on the Market for Rotary Servo Motors" in this catalog.

Configuration Example for Linear Servo Motors (Note 3)

G WG A

MR-J5-G/A or MR-J5W_-G, and LM-H3/LM-K2/LM-U2 series

●When using a junction cable

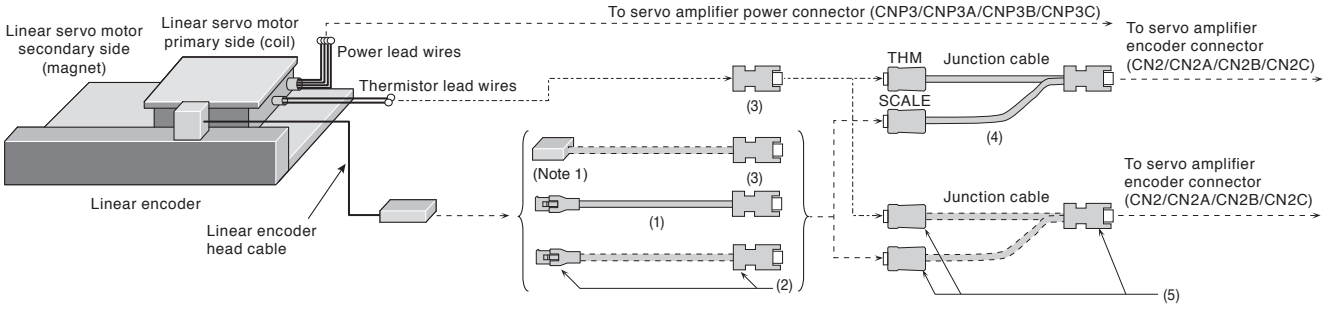

●When not using a junction cable

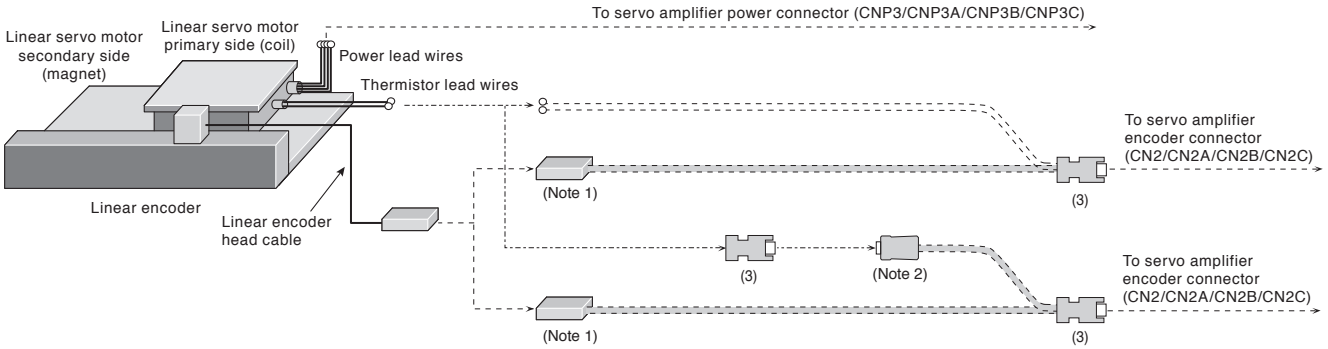

MR-J5-G/A and LM-F series

●When using a junction cable

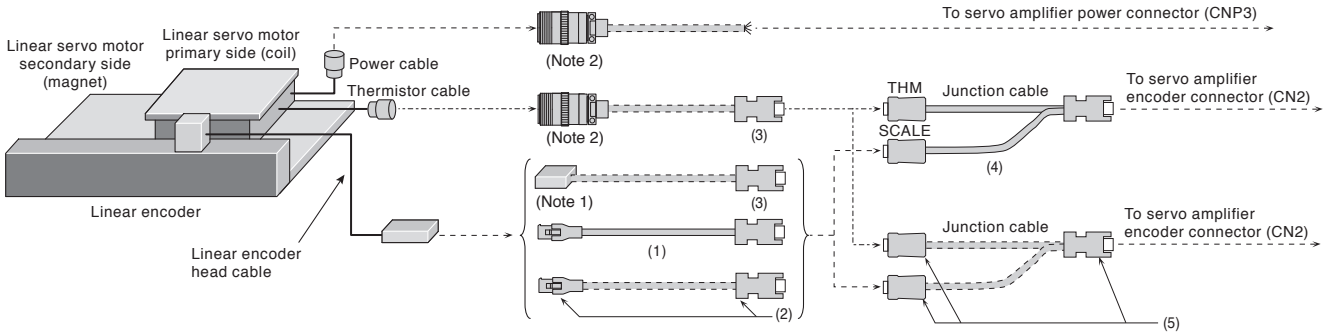

●When not using a junction cable

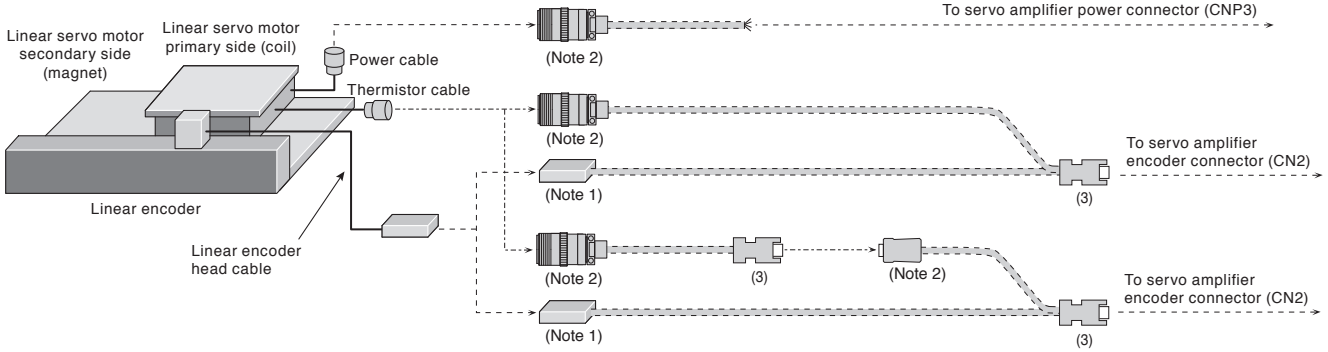

Notes: 1. Contact the relevant linear encoder manufacturers for connectors to connect with the head cables.
2. Refer to "Products on the Market for Linear Servo Motors" in this catalog for these connectors.
3. Cables drawn with dashed lines need to be fabricated by user. Refer to "Linear Servo Motor User's Manual" for fabricating the cables.

Configuration Example for Linear Servo Motors (Note 3)

G-RJ A-RJ

MR-J5-G-RJ/A-RJ and LM-H3/LM-K2/LM-U2 series with a serial linear encoder

●When using a junction cable

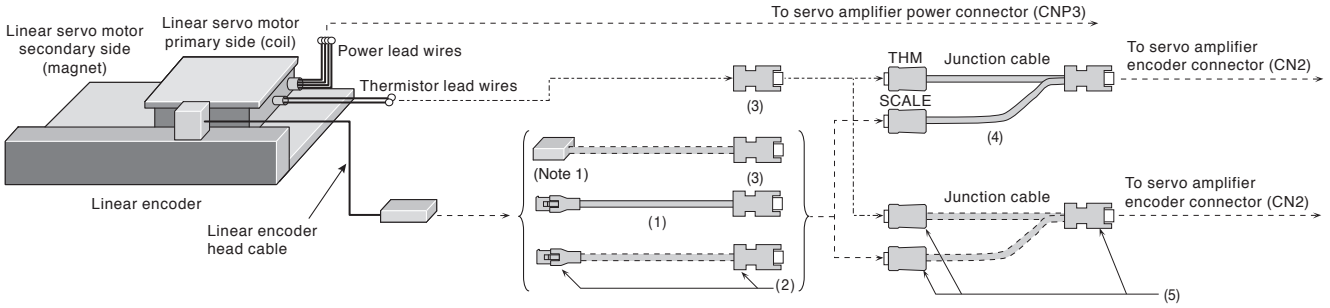

●When not using a junction cable

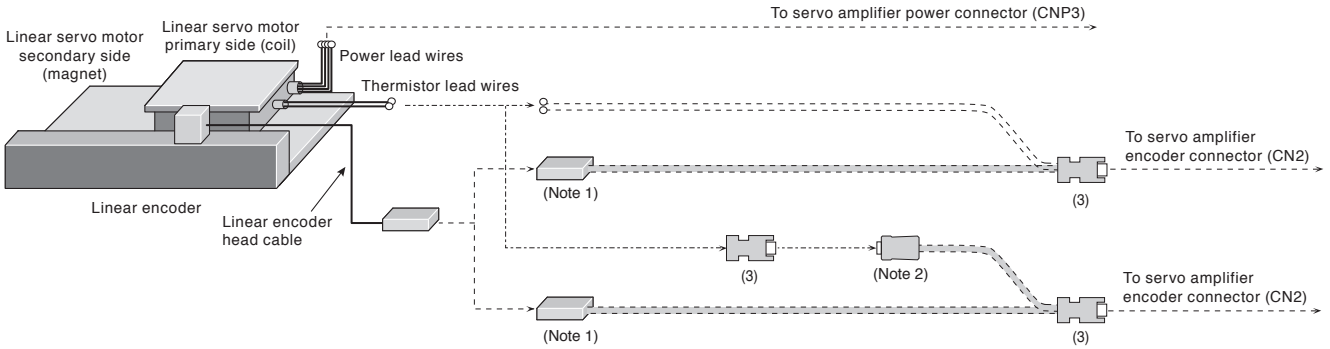

MR-J5-G-RJ/A-RJ and LM-F series with a serial linear encoder

●When using a junction cable

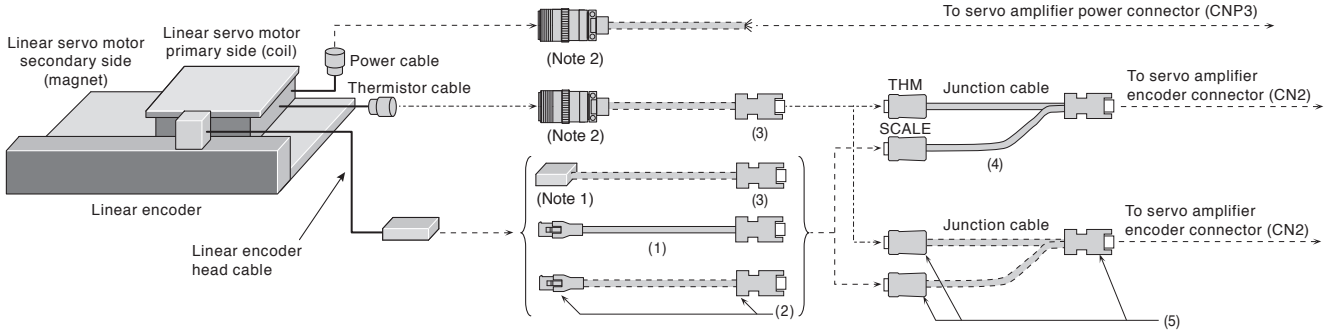

●When not using a junction cable

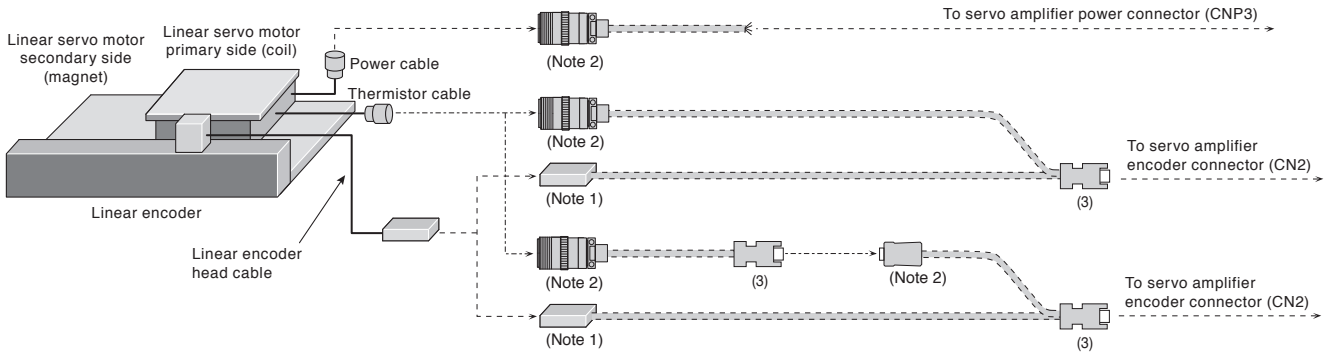

Notes: 1. Contact the relevant linear encoder manufacturers for connectors to connect with the head cables.
2. Refer to "Products on the Market for Linear Servo Motors" in this catalog for these connectors.
3. Cables drawn with dashed lines need to be fabricated by user. Refer to "Linear Servo Motor User's Manual" for fabricating the cables.

Configuration Example for Linear Servo Motors (Note 3)

G-RJ A-RJ

MR-J5-G-RJ/A-RJ and LM-H3/LM-K2/LM-U2 series with an A/B/Z-phase differential output type linear encoder

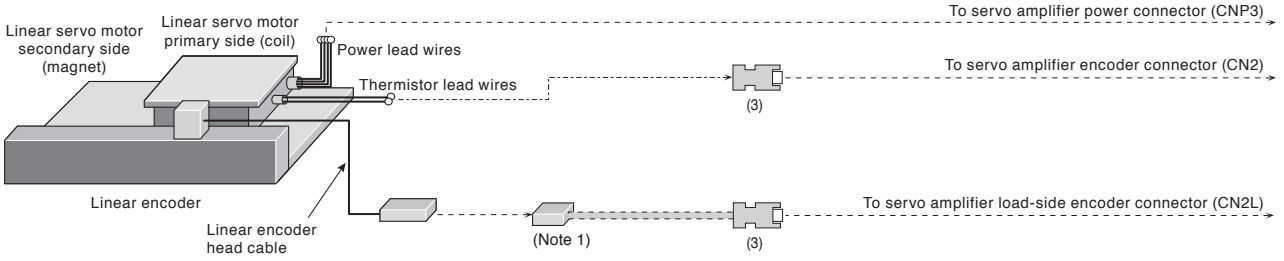

MR-J5-G-RJ/A-RJ and LM-F series with an A/B/Z-phase differential output type linear encoder

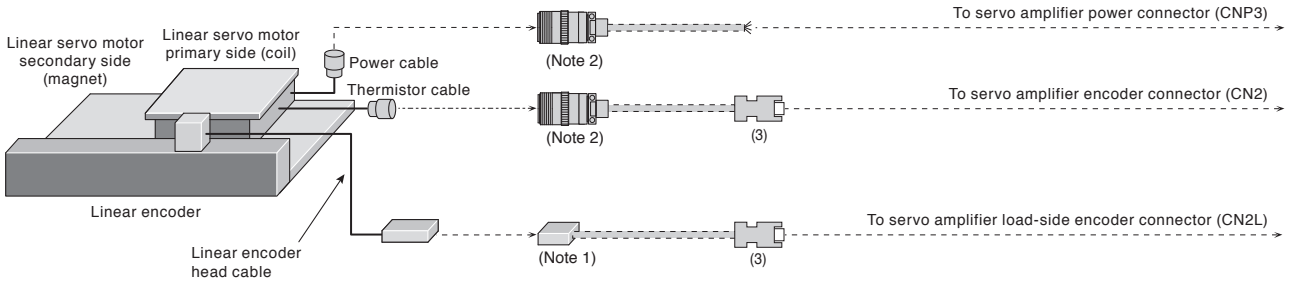

Notes: 1. Contact the relevant linear encoder manufacturers for connectors to connect with the head cables.
2. Refer to "Products on the Market for Linear Servo Motors" in this catalog for these connectors.
3. Cables drawn with dashed lines need to be fabricated by user. Refer to "Linear Servo Motor User's Manual" for fabricating the cables.

Cables and Connectors for Linear Servo Motors

Refer to "Details of Option Connectors for Servo Motors" in this catalog for the detailed models.
Encoder cables are not subject to European Low Voltage Directive (50 V AC to 1000 V AC and 75 V DC to 1500 V DC).

No.	Item	Application	Bending life	Cable length	Model	Description/IP rating (Note 1)
(1)	Encoder cable (Note 3, 4)	For connecting a linear encoder	Long bending life	2 m	MR-EKCBL2M-H	Junction connector Servo amplifier connector  IP20
				5 m	MR-EKCBL5M-H	
(2)	Encoder connector set (Note 2, 3)	For connecting a linear encoder	-	-	MR-ECNM	Junction connector Servo amplifier connector  IP20 Applicable cable Wire size: 0.3 mm² (AWG 22) Cable OD: 8.2 mm
(3)	Encoder connector set	For connecting a linear encoder or a thermistor	-	-	MR-J3CN2	Servo amplifier connector 
(4)	Junction cable for linear servo motors	For branching a thermistor	-	0.3 m	MR-J4THCBL03M	Junction connector Servo amplifier connector 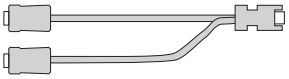
(5)	Connector set	For branching a thermistor	-	-	MR-J3THMCN2	Junction connector Servo amplifier connector 

Notes: 1. The IP rating indicated is for the connector's protection against ingress of dust and water when coupled to a servo motor. If the IP rating of the servo motor differs from that of these connectors, overall IP rating depends on the lowest of all.
2. The crimping tool (91529-1) manufactured by TE Connectivity Ltd. Company is required. Contact the manufacturer directly.
3. Use MR-EKCBL_M-H and MR-ECNM to connect to an output cable for AT343A, AT543A-SC or AT545A-SC scales manufactured by Mitutoyo Corporation.
4. For unlisted lengths of the cables, please contact Mitsubishi Electric System & Service Co., Ltd. OVERSEAS SERVICE SECTION. (Email: osb.webmaster@melsc.jp)

Configuration Example for Direct Drive Motors (Note 1)

G | G-RJ | WG | A | A-RJ

TM-RG2M/TM-RU2M/TM-RFM Series

●Incremental system

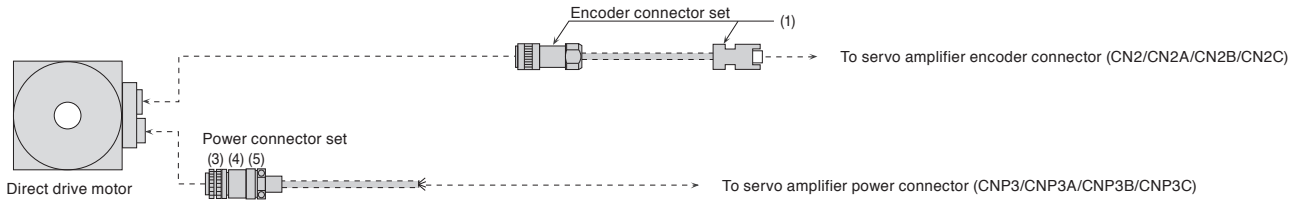

●Absolute position detection system

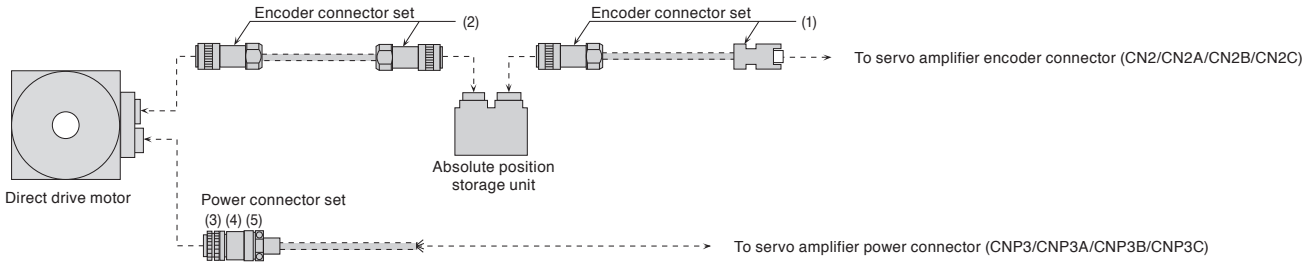

Notes: 1. Cables drawn with dashed lines need to be fabricated by user. Refer to "Direct Drive Motor User's Manual" for fabricating the cable.

Cables and Connectors for Direct Drive Motors

Refer to "Details of Option Connectors for Servo Motors" in this catalog for the detailed models.

No.	Item	Application	Bending life	Cable length	Model	Description/IP rating (Note 1)
(1)	Encoder connector set	For TM-RG2M/ TM-RU2M/TM-RFM (for connecting a direct drive motor and a servo amplifier, or an absolute position storage unit and a servo amplifier)	-	-	MR-J3DDCNS	Encoder connector or absolute position storage unit connector / Servo amplifier connector  IP67 Applicable cable Wire size: 0.25 mm² to 0.5 mm² (AWG 23 to 20) Cable OD: 7.8 mm to 8.2 mm
(2)	Encoder connector set	For TM-RG2M/ TM-RU2M/TM-RFM (for connecting a direct drive motor and an absolute position storage unit)	-	-	MR-J3DDSPS	Encoder connector / Absolute position storage unit connector  IP67 / IP67 Applicable cable Wire size: 0.25 mm² to 0.5 mm² (AWG 23 to 20) Cable OD: 7.8 mm to 8.2 mm
(3)	Power connector set (Note 2)	For TM-RG2M_, TM-RU2M_, TM-RFM_C20, and TM-RFM_E20	-	-	MR-PWCNF	Power connector  IP67 Applicable cable Wire size: 0.3 mm² to 1.25 mm² (AWG 22 to 16) Cable OD: 8.3 mm to 11.3 mm
(4)	Power connector set (Note 2)	For TM-RFM_G20	-	-	MR-PWCNS4	Power connector  IP67 Applicable cable Wire size: 2 mm² to 3.5 mm² (AWG 14 to 12) Cable OD: 10.5 mm to 14.1 mm
(5)	Power connector set (Note 2)	For TM-RFM040J10 and TM-RFM120J10	-	-	MR-PWCNS5	Power connector  IP67 Applicable cable Wire size: 5.5 mm² to 8 mm² (AWG 10 to 8) Cable OD: 12.5 mm to 16 mm

Notes: 1. The IP rating indicated is for the connector's protection against ingress of dust and water when coupled to a servo motor/absolute position storage unit. If the IP rating of the servo motor/absolute position storage unit differs from that of these connectors, overall IP rating depends on the lowest of all.
2. For fabricating cables with these connectors, please contact Mitsubishi Electric System & Service Co., Ltd. OVERSEAS SERVICE SECTION. (Email: osb.webmaster@melsc.jp)

Details of Option Connectors for Servo Motors

Model	Servo motor connector	Servo amplifier connector
MR-AEPB2CBL_M-A1-H MR-AEPB2CBL_M-A1-L MR-AEPB2CBL_M-A2-H MR-AEPB2CBL_M-A2-L MR-AEP2CBL_M-A1-H MR-AEP2CBL_M-A1-L MR-AEP2CBL_M-A2-H MR-AEP2CBL_M-A2-L	 MT50W-8D/2D4ES-CVLD(7.5) (Hirose Electric Co., Ltd.)	 Connector set: 54599-1016 (Molex, LLC) or Receptacle: 36210-0100PL Shell kit: 36310-3200-008 (3M)

Model	Servo motor connector	Junction connector
MR-AEPB2J10CBL03M-A1-L MR-AEPB2J10CBL03M-A2-L MR-AEP2J10CBL03M-A1-L MR-AEP2J10CBL03M-A2-L	 MT50W-8D/2D4ES-CVLD(7.5) (Hirose Electric Co., Ltd.)	 Contact: 170361-4 Housing: 1-172169-9 Cable clamp: 316454-1 (TE Connectivity Ltd. Company)

Model	Junction connector	Servo amplifier connector
MR-AEKCBL_M-H MR-AEKCBL_M-L	 Housing: 1-172161-9 Connector pin: 170359-1 (TE Connectivity Ltd. Company) or an equivalent product Cable clamp: MTI-0002 (Toa Electric Industrial Co., Ltd.)	 Connector set: 54599-1016 (Molex, LLC) or Receptacle: 36210-0100PL Shell kit: 36310-3200-008 (3M)

Model	Junction connector	Servo amplifier connector
MR-ECNM MR-EKCBL_M-H	 Housing: 1-172161-9 Connector pin: 170359-1 (TE Connectivity Ltd. Company) or an equivalent product Cable clamp: MTI-0002 (Toa Electric Industrial Co., Ltd.)	 Receptacle: 36210-0100PL Shell kit: 36310-3200-008 (3M) or Connector set: 54599-1019 (Molex, LLC)

Model	Servo motor connector	Junction connector
MR-AEPB2J20CBL03M-A1-L MR-AEPB2J20CBL03M-A2-L MR-AEP2J20CBL03M-A1-L MR-AEP2J20CBL03M-A2-L	 MT50W-8D/2D4ES-CVLD(7.5) (Hirose Electric Co., Ltd.)	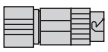 Cable receptacle: CMV1-CR10P-M2 (DDK Ltd.)

Model	Encoder connector	Servo amplifier connector
MR-J3ENSCBL_M-H (Note 1) MR-J3ENSCBL_M-L (Note 1)	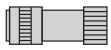 Straight plug: CMV1-SP10S-M1 Socket contact: CMV1-#22ASC-C1-100 (DDK Ltd.)	 Receptacle: 36210-0100PL Shell kit: 36310-3200-008 (3M) or Connector set: 54599-1019 (Molex, LLC)

Notes: 1. Some cables or connector sets may contain the connectors of different shapes. However, these connectors are all usable.

Details of Option Connectors for Servo Motors

Model	Junction connector/encoder connector	Servo amplifier connector
MR-AENSCBL_M-H (Note 2) MR-AENSCBL_M-L (Note 2)	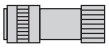 Straight plug: CMV1-SP10S-M2 Socket contact: CMV1-#22ASC-S1-100 (DDK Ltd.)	 Connector set: 54599-1016 (Molex, LLC) or Receptacle: 36210-0100PL Shell kit: 36310-3200-008 (3M)

Model	Junction connector/encoder connector	Servo amplifier connector
MR-J3SCNS (Note 1, 2, 3)	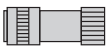 Straight plug: CMV1-SP10S-M2 Socket contact: CMV1-#22ASC-S1-100 (DDK Ltd.)	 Receptacle: 36210-0100PL Shell kit: 36310-3200-008 (3M) or Connector set: 54599-1019 (Molex, LLC)

Model	Servo motor connector	Servo amplifier connector
MR-AEPB1CBL_M-A1-H MR-AEPB1CBL_M-A1-L MR-AEPB1CBL_M-A2-H MR-AEPB1CBL_M-A2-L MR-AEP1CBL_M-A1-H MR-AEP1CBL_M-A1-L MR-AEP1CBL_M-A2-H MR-AEP1CBL_M-A2-L	 MT50W-8D/2D4ES-CV(11.9) (Hirose Electric Co., Ltd.)	 Connector set: 54599-1016 (Molex, LLC) or Receptacle: 36210-0100PL Shell kit: 36310-3200-008 (3M)

Model	Encoder connector	Servo amplifier connector
MR-ENCNS2 (Note 1, 3)	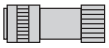 Straight plug: CMV1S-SP10S-M2 Socket contact: CMV1-#22ASC-S1-100 (DDK Ltd.)	 Receptacle: 36210-0100PL Shell kit: 36310-3200-008 (3M) or Connector set: 54599-1019 (Molex, LLC)

Model	Encoder connector	Servo amplifier connector
MR-J3SCNSA (Note 1, 2, 3)	 Angle plug: CMV1-AP10S-M2 Socket contact: CMV1-#22ASC-S1-100 (DDK Ltd.)	 Receptacle: 36210-0100PL Shell kit: 36310-3200-008 (3M) or Connector set: 54599-1019 (Molex, LLC)

Model	Encoder connector	Servo amplifier connector
MR-ENCNS2A (Note 1, 3)	 Angle plug: CMV1S-AP10S-M2 Socket contact: CMV1-#22ASC-S1-100 (DDK Ltd.)	 Receptacle: 36210-0100PL Shell kit: 36310-3200-008 (3M) or Connector set: 54599-1019 (Molex, LLC)

Notes: 1. Cable clamps and bushings for cable OD of 5.5 mm to 7.5 mm and of 7.0 mm to 9.0 mm are included in the set.
2. Some cables or connector sets may contain the connectors of different shapes. However, these connectors are all usable.
3. The connector set contains a plug and contacts. Using contacts for other plugs may damage the connector. Use the enclosed contacts.

Details of Option Connectors for Servo Motors

Model	Power connector	
MR-APWCNS4	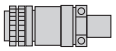	Plug: JL10-6A18-10SE-EB (straight) Cable clamp: JL04-18CK(13)-✻-R (Japan Aviation Electronics Industry, Limited)

Model	Power connector	
MR-APWCNS5	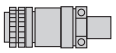	Plug: JL10-6A22-22SE-EB (straight) Cable clamp: JL04-2022CK(14)-✻-R (Japan Aviation Electronics Industry, Limited)

Model	Electromagnetic brake connector	
MR-BKCNS1 (Note 1, 2)	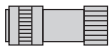	Straight plug: CMV1-SP2S-L Socket contact: CMV1-#22BSC-S2-100 (DDK Ltd.)

Model	Electromagnetic brake connector	
MR-BKCNS2 (Note 2)	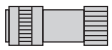	Straight plug: CMV1S-SP2S-L Socket contact: CMV1-#22BSC-S2-100 (DDK Ltd.)

Model	Electromagnetic brake connector	
MR-BKCNS1A (Note 1, 2)		Angle plug: CMV1-AP2S-L Socket contact: CMV1-#22BSC-S2-100 (DDK Ltd.)

Model	Electromagnetic brake connector	
MR-BKCNS2A (Note 2)		Angle plug: CMV1S-AP2S-L Socket contact: CMV1-#22BSC-S2-100 (DDK Ltd.)

Notes: 1. Some cables or connector sets may contain the connectors of different shapes. However, these connectors are all usable.
2. The connector set contains a plug and contacts. Using contacts for other plugs may damage the connector. Use the enclosed contacts.

Details of Option Connectors for Servo Motors

Model	Servo amplifier connector		
MR-J3CN2			
	Receptacle: 36210-0100PL Shell kit: 36310-3200-008 (3M)	or	Connector set: 54599-1019 (Molex, LLC)

Model	Junction connector	Servo amplifier connector
MR-J4THCBL03M MR-J3THMCN2		
	Plug: 36110-3000FD Shell kit: 36310-F200-008 (3M)	Receptacle: 36210-0100PL Shell kit: 36310-3200-008 (3M)

Model	Encoder connector/absolute position storage unit connector	Servo amplifier connector
MR-J3DDCNS	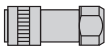	
	Plug: RM15WTPZK-12S Cord clamp: JR13WCCA-8(72) (Hirose Electric Co., Ltd.)	Receptacle: 36210-0100PL Shell kit: 36310-3200-008 (3M) or Connector set: 54599-1019 (Molex, LLC)

Model	Encoder connector	Absolute position storage unit connector
MR-J3DDSPS	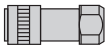	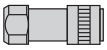
	Plug: RM15WTPZK-12S Cord clamp: JR13WCCA-8(72) (Hirose Electric Co., Ltd.)	Plug: RM15WTPZ-12P(72) Cord clamp: JR13WCCA-8(72) (Hirose Electric Co., Ltd.)

Model	Power connector	
MR-PWCNF	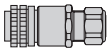	Plug: CE05-6A14S-2SD-D (straight) (DDK Ltd.) Cable clamp: YSO14-9 to 11 (Daiwa Dengyo Co., Ltd.)

Model	Power connector	
MR-PWCNS4	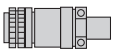	Plug: CE05-6A18-10SD-D-BSS (straight) Cable clamp: CE3057-10A-1-D (DDK Ltd.)

Model	Power connector	
MR-PWCNS5	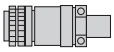	Plug: CE05-6A22-22SD-D-BSS (straight) Cable clamp: CE3057-12A-1-D (DDK Ltd.)

Products on the Market for Rotary Servo Motors

Contact the relevant manufacturers directly.
When fabricating a cable with the following connectors, refer to the relevant manufacturers' instruction manuals for wiring and assembling procedures.

Encoder connector (servo amplifier side)

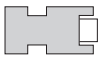

Application	Connector (3M)
Servo amplifier CN2 connector	Receptacle: 36210-0100PL Shell kit: 36310-3200-008
	Connector (Molex, LLC)
	54599-1019 (gray)
	54599-1016 (black)

Connector for HK-KT series (for dual cable type) Rotary



Applicable servo motor	Feature (Note 1)	Connector set (Hirose Electric Co., Ltd.)	Contact (Hirose Electric Co., Ltd.)	Applicable cable example
HK-KT	IP67	MT50W-8D/ 2D4ES-CVLD(7.5)	For power supply: MT50E-1820SCFA For signal: MT50D-2224SCFA	Refer to "Rotary Servo Motor User's Manual" for the applicable cables.

Connector for HK-KT series (for single cable type) Rotary



Applicable servo motor	Feature (Note 1)	Connector set (Hirose Electric Co., Ltd.)	Contact (Hirose Electric Co., Ltd.)	Applicable cable example
HK-KT	IP67	MT50W-8D/ 2D4ES-CV(11.9)	For power supply: MT50E-1820SCFA For signal: MT50D-2224SCFA	Refer to "Rotary Servo Motor User's Manual" for the applicable cables.

Encoder connector for HK-ST series Rotary

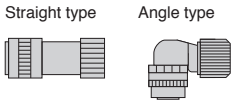

Applicable servo motor	Feature (Note 1)	Connector (DDK Ltd.)				Applicable cable example
		Type	Type of connection	Plug	Socket contact	Cable OD [mm]
HK-ST	IP67	Straight	One-touch connection type	CMV1-SP10S-M1	Select a solder or press bonding type. (Refer to the table below.)	5.5 to 7.5
				CMV1-SP10S-M2		7.0 to 9.0
			Screw type	CMV1S-SP10S-M1		5.5 to 7.5
				CMV1S-SP10S-M2		7.0 to 9.0
		Angle	One-touch connection type	CMV1-AP10S-M1		5.5 to 7.5
				CMV1-AP10S-M2		7.0 to 9.0
			Screw type	CMV1S-AP10S-M1		5.5 to 7.5
				CMV1S-AP10S-M2		7.0 to 9.0

Contact	Socket contact (DDK Ltd.)	Wire size (Note 2)
Solder type	CMV1-#22ASC-S1-100	0.5 mm^2 (AWG 20) or smaller
Press bonding type	CMV1-#22ASC-C1-100	0.2 mm^2 to 0.5 mm^2 (AWG 24 to 20) Crimping tool (357J-53162T) is required.
	CMV1-#22ASC-C2-100	0.08 mm^2 to 0.2 mm^2 (AWG 28 to 24) Crimping tool (357J-53163T) is required.

Notes: 1. The IP rating indicated is for the connector's protection against ingress of dust and water when coupled to a servo motor. If the IP rating of the servo motor differs from that of these connectors, overall IP rating depends on the lowest of all.
2. The wire size shows wiring specifications of the connector.

Products on the Market for Rotary Servo Motors

Contact the relevant manufacturers directly.
When fabricating a cable with the following connectors, refer to the relevant manufacturers' instruction manuals for wiring and assembling procedures.

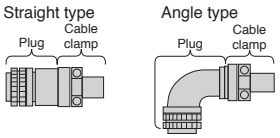

Power connector for HK-ST series **Rotary**

Applicable servo motor	Feature (Note 1)	Plug (Japan Aviation Electronics Industry, Limited)			Cable clamp (Japan Aviation Electronics Industry, Limited)	Applicable cable example	
		Type	Type of connection	Model		Wire size (Note 2)	Cable OD [mm]
HK-ST52(4)W, 102(4)W, 172(4)W, 202(4)AW, 302(4)W	IP67	Straight	Screw type	JL04V-6A18-10SE-EB-R	JL04-18CK(13)-∗-R	2 mm² to 3.5 mm² (AWG 14 to 12)	11 to 14.1
		Angle	One-touch connection type	JL10-8A18-10SE-EB	JL04-18CK(13)-∗-R		11 to 14.1
			Screw type	JL04V-8A18-10SE-EBH-R	JL04-18CK(13)-∗-R		11 to 14.1
HK-ST202(4)W, 352(4)W, 5024W		Straight	Screw type	JL04V-6A22-22SE-EB-R	JL04-2022CK(14)-∗-R	5.5 mm² to 8 mm² (AWG 10 to 8)	12.9 to 16
		Angle	One-touch connection type	JL10-8A22-22SE-EB	JL04-2022CK(14)-∗-R		12.9 to 16
			Screw type	JL04V-8A22-22SE-EBH-R	JL04-2022CK(14)-∗-R		12.9 to 16

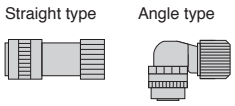

Electromagnetic brake connector for HK-ST series **Rotary**

Applicable servo motor	Feature (Note 1)	Connector (DDK Ltd.)				Applicable cable example
		Type	Type of connection	Plug	Socket contact	Cable OD [mm]
HK-ST	IP67	Straight	One-touch connection type	CMV1-SP2S-S	Select a solder or press bonding type. (Refer to the table below.)	4.0 to 6.0
				CMV1-SP2S-M1		5.5 to 7.5
				CMV1-SP2S-M2		7.0 to 9.0
				CMV1-SP2S-L		9.0 to 11.6
			Screw type	CMV1S-SP2S-S		4.0 to 6.0
				CMV1S-SP2S-M1		5.5 to 7.5
				CMV1S-SP2S-M2		7.0 to 9.0
				CMV1S-SP2S-L		9.0 to 11.6
		Angle	One-touch connection type	CMV1-AP2S-S		4.0 to 6.0
				CMV1-AP2S-M1		5.5 to 7.5
				CMV1-AP2S-M2		7.0 to 9.0
				CMV1-AP2S-L		9.0 to 11.6
			Screw type	CMV1S-AP2S-S		4.0 to 6.0
				CMV1S-AP2S-M1		5.5 to 7.5
				CMV1S-AP2S-M2		7.0 to 9.0
				CMV1S-AP2S-L		9.0 to 11.6

Contact	Socket contact (DDK Ltd.)	Wire size (Note 2)
Solder type	CMV1-#22BSC-S2-100	1.25 mm² (AWG 16) or smaller
Press bonding type	CMV1-#22BSC-C3-100	0.5 mm² to 1.25 mm² (AWG 20 to 16) Crimping tool (357J-53164T) is required.

Notes: 1. The IP rating indicated is for the connector's protection against ingress of dust and water when coupled to a servo motor. If the IP rating of the servo motor differs from that of these connectors, overall IP rating depends on the lowest of all.
2. The wire size shows wiring specifications of the connector. Refer to "Selection Example in HIV Wires for Servo Motors" in this catalog for examples of wire size selection.

Rotary Rotary servo motor **Linear** Linear servo motor **Direct** Direct drive motor

Products on the Market for Linear Servo Motors

Contact the relevant manufacturers directly.
When fabricating a cable with the following connectors, refer to the relevant manufacturers' instruction manuals for wiring and assembling procedures.

Thermistor junction connector for LM-H3/LM-K2/LM-U2/LM-F series **Linear**



Applicable servo motor	Feature (Note 1)	Connector (3M)		Applicable cable example
		Plug	Shell kit	
LM-H3/ LM-K2/ LM-U2/ LM-F	General environment	36110-3000FD	36310-F200-008	Wire size: 0.3 mm² (AWG 22) or smaller Cable OD: 7 mm to 9 mm

Thermistor connector for LM-F series **Linear**

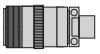

Applicable servo motor	Feature (Note 1)	Cable receptacle (DDK Ltd.)	Cable clamp (DDK Ltd.)	Applicable cable example
LM-F	General environment	D/MS3101A14S-9S	D/MS3057A-6A	Wire size: 0.3 mm² to 1.25 mm² (AWG 22 to 16) Cable OD: 7.9 mm or smaller

Power connector for LM-F series **Linear**

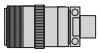

Applicable servo motor	Feature (Note 1)	Cable receptacle (DDK Ltd.)	Cable clamp (DDK Ltd.)	Applicable cable example	
				Wire size (Note 2)	Cable OD [mm]
LM-FP2B	General environment (Note 3)	D/MS3101A18-10S	D/MS3057-10A	2 mm² to 3.5 mm² (AWG 14 to 12)	14.3 or smaller (bushing ID)

Notes: 1. The IP rating indicated is for the connector's protection against ingress of dust and water when coupled to a servo motor. If the IP rating of the servo motor differs from that of these connectors, overall IP rating depends on the lowest of all.
2. The wire size shows wiring specifications of the connector. Refer to "Selection Example in HIV Wires for Servo Motors" in this catalog for examples of wire size selection.
3. Not compliant with EN.

Rotary Rotary servo motor **Linear** Linear servo motor **Direct** Direct drive motor

Products on the Market for Direct Drive Motors

Contact the relevant manufacturers directly.
When fabricating a cable with the following connectors, refer to the relevant manufacturers' instruction manuals for wiring and assembling procedures.

Encoder connector for TM-RG2M/TM-RU2M/TM-RFM series and absolute position storage unit connector (servo amplifier side) Direct

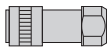

Applicable servo motor	Application	Feature (Note 1)	Plug (Hirose Electric Co., Ltd.)			Applicable cable example
			Type	Plug	Cord clamp	
TM-RG2M/ TM-RU2M/ TM-RFM	For an encoder or absolute position storage unit (servo amplifier side)	IP67	Straight	RM15WTPZK-12S	JR13WCCA-8(72)	Wire size: 0.5 mm^2 (AWG 20) or smaller Cable OD: 7.8 mm to 8.2 mm Wire example: Vinyl jacket cable 20276 VSVPAWG#23 × 6P KB-0492 Bando Densen Co., Ltd. (Note 2)

Encoder connector for TM-RG2M/TM-RU2M/TM-RFM series and absolute position storage unit connector (encoder side) Direct

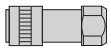

Applicable servo motor	Application	Feature (Note 1)	Plug (Hirose Electric Co., Ltd.)			Applicable cable example
			Type	Plug	Cord clamp	
TM-RG2M/ TM-RU2M/ TM-RFM	For an absolute position storage unit (encoder side)	IP67	Straight	RM15WTPZ-12P(72)	JR13WCCA-8(72)	Wire size: 0.5 mm^2 (AWG 20) or smaller Cable OD: 7.8 mm to 8.2 mm Wire example: Vinyl jacket cable 20276 VSVPAWG#23 × 6P KB-0492 Bando Densen Co., Ltd. (Note 2)

Notes: 1. The IP rating indicated is for the connector's protection against ingress of dust and water when coupled to a servo motor/absolute position storage unit. If the IP rating of the servo motor/absolute position storage unit differs from that of these connectors, overall IP rating depends on the lowest of all.
2. Contact Toa Electric Industrial Co., Ltd.

Rotary Rotary servo motor **Linear** Linear servo motor **Direct** Direct drive motor

Products on the Market for Direct Drive Motors

Contact the relevant manufacturers directly.
When fabricating a cable with the following connectors, refer to the relevant manufacturers' instruction manuals for wiring and assembling procedures.

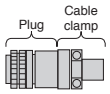

Power connector for TM-RFM series **Direct**

Applicable servo motor	Feature (Note 1)	Plug (with backshell) (DDK Ltd.)		Cable clamp (DDK Ltd.)	Applicable cable example	
		Type	Model	Model	Wire size (Note 3)	Cable OD [mm]
TM-RFM012G20, 048G20, 072G20	IP67 EN compliant	Straight	CE05-6A18-10SD-D-BSS	CE3057-10A-2-D	2 mm² to 3.5 mm² (AWG 14 to 12)	8.5 to 11
				CE3057-10A-1-D		10.5 to 14.1
	General environment (Note 2)		D/MS3106B18-10S	D/MS3057-10A	2 mm² to 3.5 mm² (AWG 14 to 12)	14.3 or smaller (bushing ID)
TM-RFM040J10, 120J10	IP67 EN compliant		CE05-6A22-22SD-D-BSS	CE3057-12A-2-D	5.5 mm² to 8 mm² (AWG 10 to 8)	9.5 to 13
				CE3057-12A-1-D		12.5 to 16
	General environment (Note 2)		D/MS3106B22-22S	D/MS3057-12A	5.5 mm² to 8 mm² (AWG 10 to 8)	15.9 or smaller (bushing ID)

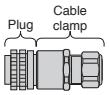

Power connector for TM-RG2M/TM-RU2M/TM-RFM series **Direct**

Applicable servo motor	Feature (Note 1)	Plug (DDK Ltd.)	Cable clamp (with backshell)			Applicable cable example	
			Type	Model	Manufacturer	Wire size (Note 3)	Cable OD [mm]
TM-RG2M_, TM-RU2M_, TM-RFM002C20, 004C20, 006C20, 006E20, 012E20, 018E20	IP67 EN compliant	CE05-6A14S-2SD-D	Straight	ACS-08RL-MS14F	Nippon Flex Co., Ltd.	0.3 mm² to 1.25 mm² (AWG 22 to 16)	4 to 8
				ACS-12RL-MS14F			8 to 12
				YSO14-5 to 8	Daiwa Dengyo Co., Ltd.		5 to 8.3
				YSO14-9 to 11			8.3 to 11.3
	General environment (Note 2)	D/MS3106B14S-2S	Straight	D/MS3057-6A	DDK Ltd.	0.3 mm² to 1.25 mm² (AWG 22 to 16)	7.9 or smaller (bushing ID)

Notes: 1. The IP rating indicated is for the connector's protection against ingress of dust and water when coupled to a servo motor. If the IP rating of the servo motor differs from that of these connectors, overall IP rating depends on the lowest of all.
2. Not compliant with EN.
3. The wire size shows wiring specifications of the connector. Refer to "Selection Example in HIV Wires for Servo Motors" in this catalog for examples of wire size selection.

Rotary Rotary servo motor **Linear** Linear servo motor **Direct** Direct drive motor

Configuration Example for MR-J5-_G(-RJ)

G G-RJ

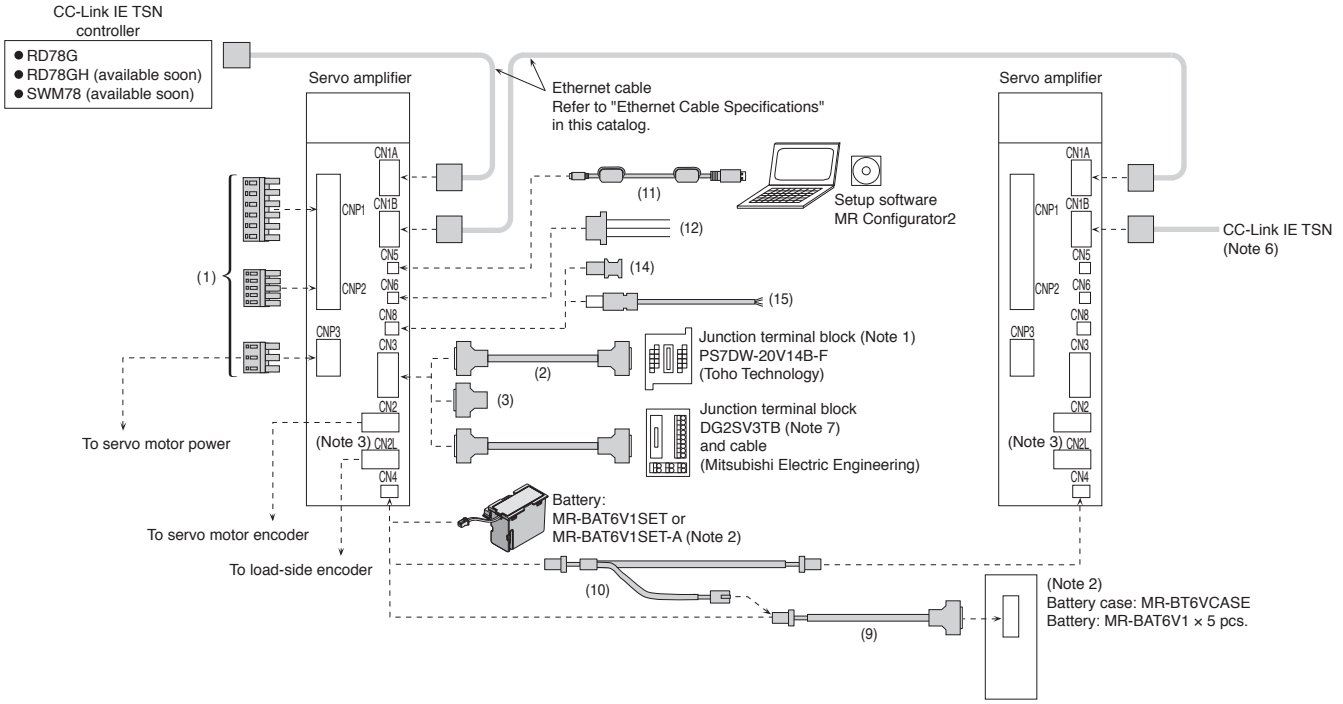

Configuration Example for MR-J5W2-_G/MR-J5W3-_G

WG

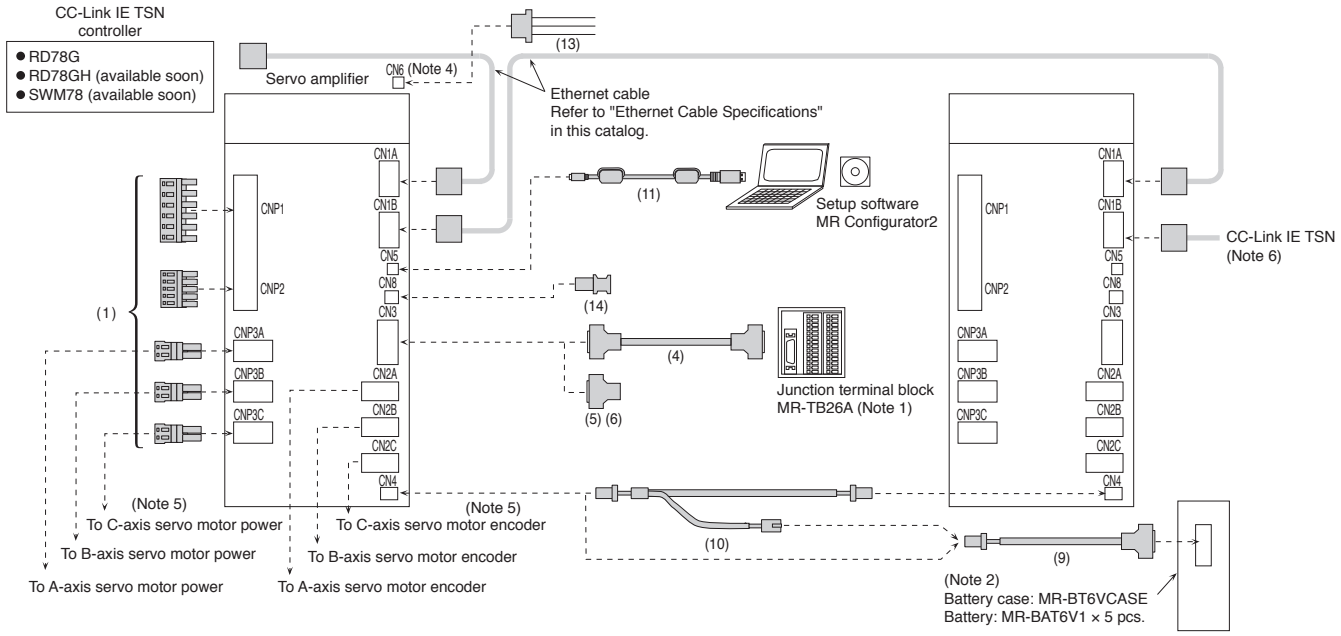

Notes:
1. Refer to "Junction Terminal Block" in this catalog.
2. The battery, or the battery and the battery case are required to configure an absolute position detection system with a direct drive motor. Refer to "Battery" or "Battery Case and Battery" in this catalog.
3. CN2L connector is available for MR-J5-G-RJ servo amplifiers.
4. MR-J5W2-G/MR-J5W3-G servo amplifiers have CN6 connector on the top of the unit.
5. CNP3C and CN2C connectors are available for MR-J5W3-G servo amplifier.
6. When branching off CC-Link IE TSN (synchronous communication function) with a switching hub, use a switching hub (Class B) recommended by CC-Link Partner Association. When a switching hub (Class A) is used, there are restrictions on the topologies to be used. Refer to "MELSEC iQ-R Motion Module User's Manual" for details.
7. Refer to p. 7-36 in this catalog for details.

Ethernet Cable Specifications (Note 1, 2)

Item		Description
Ethernet Cable		Category 5e or higher, (double shielded/STP) straight cable
	Standard	The cable must meet the following: • IEEE802.3 (1000BASE-T) • ANSI/TIA/EIA-568-B (Category 5e)
	Connector	RJ-45 connector with shield

Notes: 1. Use wiring parts recommended by CC-Link Partner Association for wiring the CC-Link IE TSN.
2. Cables for CC-Link IE Controller Network cannot be used with CC-Link IE TSN.

[Products on the Market]
Ethernet Cable

Item		Model	Specifications	
Ethernet Cable	For indoor	SC-E5EW-S_M	_: cable length (100 m max., unit of 1 m)	Double shielded cable (Category 5e)
	For indoor and moving part	SC-E5EW-S_M-MV	_: cable length (45 m max., unit of 1 m)	
	For indoor/outdoor	SC-E5EW-S_M-L	_: cable length (100 m max., unit of 1 m)	

For details, please contact Mitsubishi Electric System & Service Co., Ltd. OVERSEAS SERVICE SECTION. (Email: osb.webmaster@melsc.jp)

* Refer to the website of CC-Link Partner Association for cables on the market other than above.
https://www.cc-link.org/en/

Configuration Example for MR-J5-_A(-RJ) (Note 4)

A A-RJ

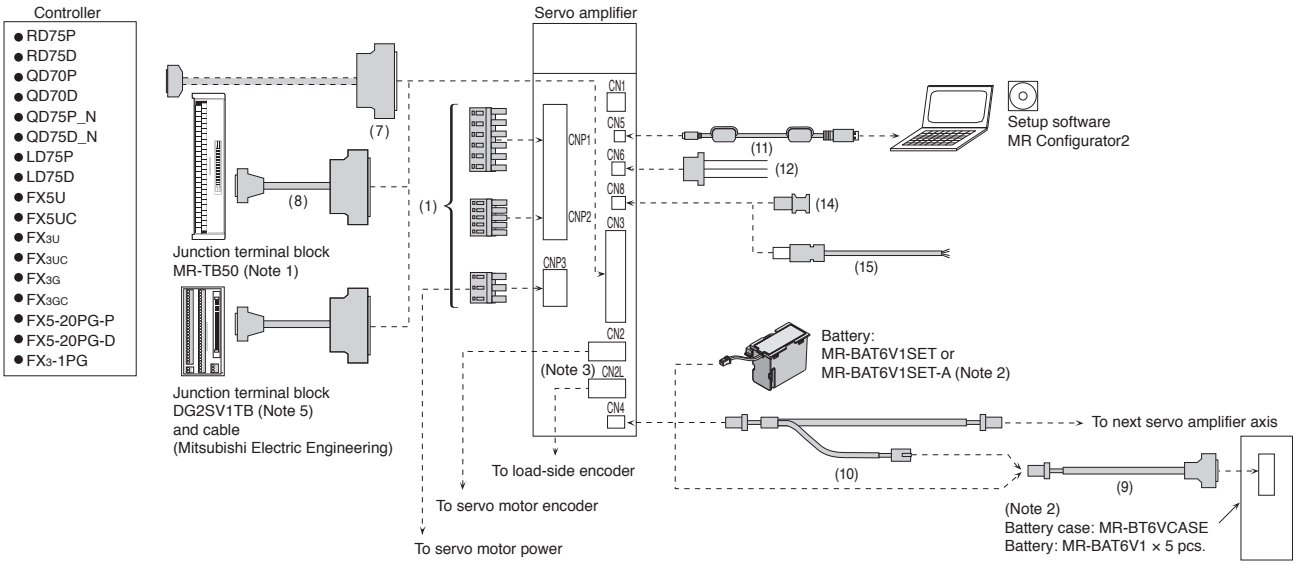

Notes: 1. Refer to "Junction Terminal Block" in this catalog.
2. The battery, or the battery and the battery case are required to configure an absolute position detection system with a direct drive motor. Refer to "Battery" or "Battery Case and Battery" in this catalog.
3. CN2L connector is available for MR-J5-A-RJ servo amplifiers.
4. Cables drawn with dashed lines need to be fabricated by user. Refer to "MR-J5 User's Manual" for fabricating the cables.
5. Refer to p. 7-35 in this catalog for details.

Cables and Connectors for Servo Amplifiers

Refer to "Details of Option Connectors for Servo Amplifiers" in this catalog for the detailed models.

No.		Item	Application	Cable length	Model	Description
For CNP1/CNP2/CNP3/CNP3A/CNP3B/CNP3C	(1)	Servo amplifier power connector set (Note 1)	For MR-J5-100G(-RJ) or smaller/ MR-J5-100A(-RJ) or smaller	-	(Standard accessory)	CNP1 connector, CNP2 connector, CNP3 connector, Open tool  Applicable wire size (Note 2): AWG 18 to 14 Insulator OD: 3.9 mm or smaller
			For MR-J5-200G(-RJ)/ MR-J5-200A(-RJ)/ MR-J5-350G(-RJ)/ MR-J5-350A(-RJ)			CNP1 connector, CNP2 connector, CNP3 connector, Open tool  CNP1/CNP3 connector Applicable wire size (Note 2): AWG 16 to 10 Insulator OD: 4.7 mm or smaller CNP2 connector Applicable wire size (Note 2): AWG 18 to 14 Insulator OD: 3.9 mm or smaller
			For MR-J5W2-44G or smaller/ MR-J5W3-444G or smaller			CNP1 connector, CNP2 connector, CNP3_ connector, Open tool  Applicable wire size (Note 2): AWG 18 to 14 Insulator OD: 3.9 mm or smaller
			For MR-J5W2-77G or larger			CNP1 connector, CNP2 connector, CNP3_ connector, Open tool  CNP1 connector Applicable wire size (Note 2): AWG 16 to 10 Insulator OD: 4.7 mm or smaller CNP2, CNP3_ connector Applicable wire size (Note 2): AWG 18 to 14 Insulator OD: 3.9 mm or smaller
For CN3	(2)	Junction terminal block cable	For connecting MR-J5-_G(-RJ) and PS7DW-20V14B-F	0.5 m	MR-J2HBUS05M	Servo amplifier connector, Junction terminal block connector 
				1 m	MR-J2HBUS1M	
				5 m	MR-J2HBUS5M	
	(3)	Connector set	For MR-J5-_G(-RJ)	-	MR-CCN1	 Servo amplifier connector
	(4)	Junction terminal block cable	For connecting MR-J5W2-_G/ MR-J5W3-_G and MR-TB26A	0.5 m	MR-TBNATBL05M	Servo amplifier connector, Junction terminal block connector 
				1 m	MR-TBNATBL1M	
	(5)	Connector set (Qty: 1 pc.)	For MR-J5W2-_G/ MR-J5W3-_G	-	MR-J2CMP2	 Servo amplifier connector
	(6)	Connector set (Qty: 20 pcs.)	For MR-J5W2-_G/ MR-J5W3-_G	-	MR-ECN1	
	(7)	Junction terminal block cable	For connecting MR-J5-_A(-RJ) and MR-TB50	0.5 m	MR-J2M-CN1TBL05M	Junction terminal block connector, Servo amplifier connector 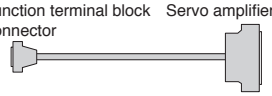
				1 m	MR-J2M-CN1TBL1M	
	(8)	Connector set	For MR-J5-_A(-RJ)	-	MR-J3CN1	 Servo amplifier connector

Notes: 1. The wire size shows wiring specifications of the connector. Refer to "Selection Example in HIV Wires for Servo Motors" in this catalog for examples of wire size selection.
2. The press bonding type is also available. Refer to "MR-J5 User's Manual" for details.

Cables and Connectors for Servo Amplifiers

Refer to "Details of Option Connectors for Servo Amplifiers" in this catalog for the detailed models.

No.		Item	Application	Cable length	Model	Description
For CN4	(9)	Battery cable	For connecting MR-J5-_G(-RJ)/ MR-J5W2-_G/ MR-J5W3-_G/ MR-J5-_A(-RJ) and MR-BT6VCASE	0.3 m	MR-BT6V1CBL03M	
				1 m	MR-BT6V1CBL1M	
	(10)	Junction battery cable	For MR-J5-_G(-RJ)/ MR-J5W2-_G/ MR-J5W3-_G/ MR-J5-_A(-RJ)	0.3 m	MR-BT6V2CBL03M	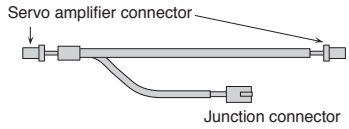
				1 m	MR-BT6V2CBL1M	
For CN5	(11)	Personal computer communication cable (USB cable)	For MR-J5-_G(-RJ)/ MR-J5W2-_G/ MR-J5W3-_G/ MR-J5-_A(-RJ)	3 m	MR-J3USBCBL3M	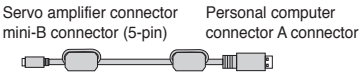
For CN6	(12)	Monitor cable	For MR-J5-_G(-RJ)/ MR-J5-_A(-RJ)	1 m	MR-ACN6CBL1M	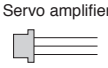
	(13)	Monitor cable	For MR-J5W2-_G/ MR-J5W3-_G	1 m	MR-J3CN6CBL1M	
For CN8	(14)	Short-circuit connector	For MR-J5-_G(-RJ)/ MR-J5W2-_G/ MR-J5W3-_G/ MR-J5-_A(-RJ)	-	(Standard accessory)	 This connector is required when the STO function is not used.
	(15)	STO cable	For connecting a safety control device with MR-J5-_G/MR-J5-_A(-RJ)	3 m	MR-D05UDL3M-B	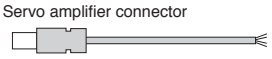

Configuration Example for MR-CM

G G-RJ WG A A-RJ

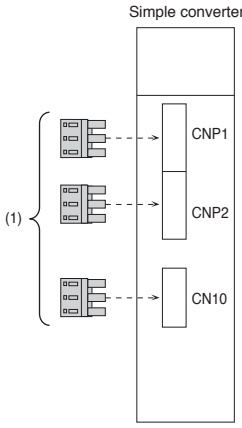

Cables and Connectors for MR-CM

Refer to "Details of Option Connectors for MR-CM" in this catalog for the detailed models.

No.	Item	Application	Model	Description
(1)	Simple converter connector set	For MR-CM3K	(Standard accessory)	CNP1 connector / CNP2 connector / CNP10 connector / Open tool  CNP1, CNP2 connector Applicable wire size (Note 1): AWG 16 to 10 Insulator OD: 4.7 mm or smaller CNP10 connector Applicable wire size (Note 1): AWG 18 to 14 Insulator OD: 3.9 mm or smaller

Notes: 1. The wire size shows wiring specifications of the connector. Refer to "Wires, Molded-Case Circuit Breakers and Magnetic Contactors" in this catalog for examples of wire size selection.

Details of Option Connectors for Servo Amplifiers

Model	CNP1 connector	CNP2 connector	CNP3 connector	Open tool
Servo amplifier power connector set For MR-J5-100G(-RJ) or smaller/ MR-J5-100A(-RJ) or smaller (standard accessory)	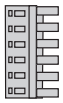 06JFAT-SAXGDK-K7.5 (LA) (J.S.T. Mfg. Co., Ltd.)	 05JFAT-SAXGDK-K5.0 (LA) (J.S.T. Mfg. Co., Ltd.)	 03JFAT-SAXGDK-K7.5 (LA) (J.S.T. Mfg. Co., Ltd.)	 J-FAT-OT-K (J.S.T. Mfg. Co., Ltd.)

Model	CNP1 connector	CNP2 connector	CNP3 connector	Open tool
Servo amplifier power connector set For MR-J5-200G(-RJ)/ MR-J5-200A(-RJ)/ MR-J5-350G(-RJ)/ MR-J5-350A(-RJ) (standard accessory)	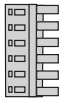 06JFAT-SAXGFK-XL (LA) (J.S.T. Mfg. Co., Ltd.)	 05JFAT-SAXGDK-H5.0 (LA) (J.S.T. Mfg. Co., Ltd.)	 03JFAT-SAXGFK-XL (LA) (J.S.T. Mfg. Co., Ltd.)	 J-FAT-OT-EXL (J.S.T. Mfg. Co., Ltd.)

Model	CNP1 connector	CNP2 connector	CNP3_ connector	Open tool
Servo amplifier power connector set For MR-J5W2-44G or smaller/ MR-J5W3-444G or smaller (standard accessory)	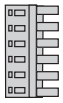 06JFAT-SAXGDK-K7.5 (LB) (J.S.T. Mfg. Co., Ltd.)	 05JFAT-SAXGDK-K5.0 (LA) (J.S.T. Mfg. Co., Ltd.)	 04JFAT-SAGG-G-KK (J.S.T. Mfg. Co., Ltd.)	 J-FAT-OT-K (J.S.T. Mfg. Co., Ltd.)

Model	CNP1 connector	CNP2 connector	CNP3_ connector	Open tool
Servo amplifier power connector set For MR-J5W2-77G or larger (standard accessory)	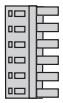 06JFAT-SAXGFK-XL (LB) (J.S.T. Mfg. Co., Ltd.)	 05JFAT-SAXGDK-H5.0 (LA) (J.S.T. Mfg. Co., Ltd.)	 04JFAT-SAGG-G-KK (J.S.T. Mfg. Co., Ltd.)	 J-FAT-OT-EXL (J.S.T. Mfg. Co., Ltd.)

Model	Servo amplifier connector	Junction terminal block connector
MR-J2HBUS_M	 Connector: 52316-2019 Shell kit: 52370-2070 (Molex, LLC) or an equivalent product or Press bonding type (Note 2) Connector: 10120-6000EL Shell kit: 10320-3210-000 (3M) or an equivalent product	 Connector: 52316-2019 Shell kit: 52370-2070 (Molex, LLC) or an equivalent product or Press bonding type (Note 2) Connector: 10120-6000EL Shell kit: 10320-3210-000 (3M) or an equivalent product

Model	Servo amplifier connector
MR-CCN1	 Solder type (Note 1) Connector: 10120-3000PE Shell kit: 10320-52F0-008 (3M) or an equivalent product

Model	Servo amplifier connector	Junction terminal block connector
MR-TBNATBL_M	 Connector: 10126-6000EL Shell kit: 10326-3210-000 (3M) or an equivalent product	 Connector: 10126-6000EL Shell kit: 10326-3210-000 (3M) or an equivalent product

Notes: 1. The press bonding type (Connector: Shell kit: 10120-6000EL and Shell kit: 10320-3210-000) (3M) is also usable. Contact the manufacturer directly.
2. The solder type (connector: 10120-3000PE and shell kit: 10320-52F0-008) (3M) is also usable. Contact the manufacturer directly.

Details of Option Connectors for Servo Amplifiers

Model	Servo amplifier connector	
MR-J2CMP2 MR-ECN1		Connector: 10126-3000PE Shell kit: 10326-52F0-008 (3M) or an equivalent product

Model	Junction terminal block connector	Servo amplifier connector
MR-J2M-CN1TBL_M	 Connector: D7950-B500FL (3M)	 Press bonding type (Note 1) Connector: 10150-6000EL Shell kit: 10350-3210-000 (3M)

Model	Servo amplifier connector	
MR-J3CN1		Connector: 10150-3000PE Shell kit: 10350-52F0-008 (3M) or an equivalent product

Model	Servo amplifier connector	Battery case connector
MR-BT6V1CBL_M	 Contact: SPHD-001G-P0.5 Housing: PAP-02V-O (J.S.T. Mfg. Co., Ltd.)	 Solder type (Note 2) Connector: 10114-3000PE Shell kit: 10314-52F0-008 (3M) or an equivalent product

Model	Servo amplifier connector	Junction connector
MR-BT6V2CBL_M	 Contact: SPHD-001G-P0.5 Housing: PAP-02V-O (J.S.T. Mfg. Co., Ltd.)	 Contact: SPAL-001GU-P0.5 Housing: PALR-02VF-O (J.S.T. Mfg. Co., Ltd.)

Model	Servo amplifier connector	
MR-ACN6CBL1M		Housing: SHR-03V-S Contact: SSH-003T-P0.2-H (J.S.T. Mfg. Co., Ltd.)

Model	Servo amplifier connector	
MR-J3CN6CBL1M		Housing: 51004-0300 Terminal: 50011-8100 (Molex, LLC)

Model	Servo amplifier connector	
MR-D05UDL3M-B	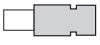	Connector set: 2069250-1 (TE Connectivity Ltd. Company)

Notes: 1. The solder type (connector: 10150-3000PE and shell kit: 10350-52F0-008) (3M) is also usable. Contact the manufacturer directly.
2. The press bonding type (connector: 10114-6000EL and shell kit: 10314-3210-000) (3M) is also usable. Contact the manufacturer directly.

Details of Option Connectors for MR-CM

Model	CNP1 connector	CNP2 connector	CNP10 connector	Open tool
Simple converter connector set (standard accessory)	 03JFAT-SAYGFK-XL (LB) (J.S.T. Mfg. Co., Ltd.)	 02(16.0)JFAT-SAZGFK-XL (LA) (J.S.T. Mfg. Co., Ltd.)	 02(3-2)JFAT-SAYDFK-K7.5 (J.S.T. Mfg. Co., Ltd.)	 J-FAT-OT-EXL (J.S.T. Mfg. Co., Ltd.)

Products on the Market for Servo Amplifiers

Mitsubishi Electric Engineering

Drive Goods Junction Terminal Block with Brake Contact Output

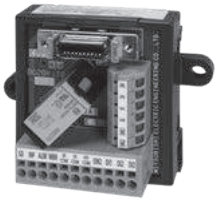

Features

- **This is a junction terminal block with a built-in brake sequence circuit recommended for the MR-J5-G servo amplifier.**
- **The DG2BK1TB junction terminal block with brake contact output reduces the brake sequence circuit installation space.**

Connection with servo amplifier

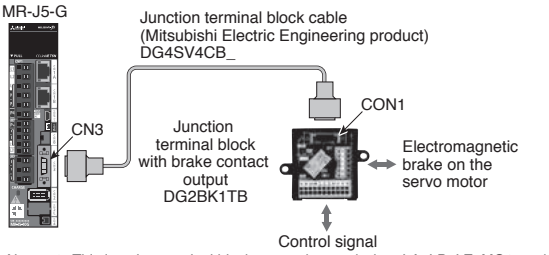

Notes: 1. This junction terminal block cannot be used when LA, LB, LZ, MO1, and MO2 signals from the CN3 connector of the servo amplifier are used.
2. The DG2BK1TB cannot be connected to the MR-J5W2-G and the MR-J5W3-G.
3. 24 V DC power supplies for control signals and a servo motor electromagnetic brake are required separately.
4. Use the DG2BK1TB at an altitude of 1000 m or less.

Dimensions

■ **DG2BK1TB, DG2BK1TB-P01**

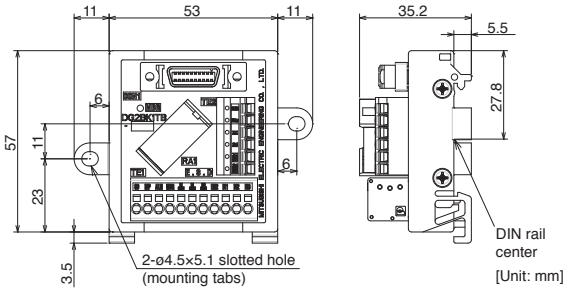

Notes: 1. The DG2BK1TB-D and the DG2BK1TB-P01-D are without mounting tabs.

Product models

Item	Model
Junction terminal block with brake contact output (sink type)	DG2BK1TB
Junction terminal block with brake contact output dedicated for DIN rail mounting (sink type)	DG2BK1TB-D
Junction terminal block with brake contact output (source type)	DG2BK1TB-P01
Junction terminal block with brake contact output dedicated for DIN rail mounting (source type)	DG2BK1TB-P01-D

Drive Goods Mechanical Signal Terminal Block



Features

- **The terminal blocks are designed specifically for the FLS/RLS and DOG of mechanical installation signals, downsizing the footprints.**
- **Sensor leads are directly connectable to the terminal block for mechanical installation.**

Implementation example

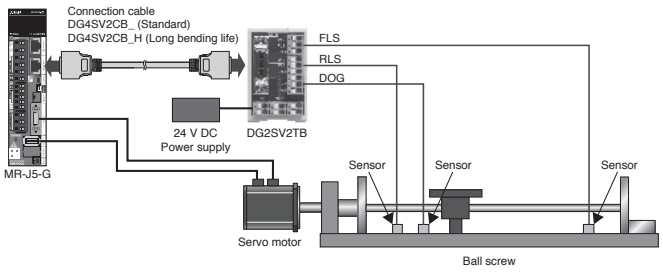

Dimensions

■ **DG2SV2TB (for one axis)**

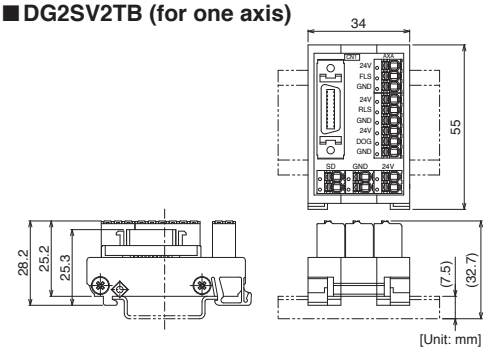

Product models

Item	Model
Mechanical Signal Terminal Block	DG2SV2TB (for one axis)/DG2SV2TB2 (for two axes)/DG2SV2TB3 (for three axes)

Compatible servo amplifier	Connection cable		
MR-J5-G	Cable for the sink interface	Standard	DG4SV2CB05 (length: 0.5 m) DG4SV2CB10 (length: 1 m) DG4SV2CB50 (length: 5 m)
		Long bending life	DG4SV2CB50H (length: 5 m) DG4SV2CB100H (length: 10 m)
	Cable for the source interface	Standard	DG4SV2CB05-P01 (length: 0.5 m) DG4SV2CB10-P01 (length: 1 m) DG4SV2CB50-P01 (length: 5 m)
		Long bending life	DG4SV2CB50H-P01 (length: 5 m) DG4SV2CB100H-P01 (length: 10 m)

Connection cables for a multi-axis system are also available.

Drive Goods Junction Terminal Block for General-Purpose Interface Servo Amplifier

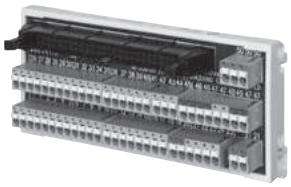

Features

- **With this junction terminal block for general-purpose interface servo amplifier, the footprint is approximately 50 % smaller than the screw type terminal block.**
- **Thanks to the spring clamp terminal block, tightening screws is not required. Retightening the screws at a regular inspection is not necessary because of no screw looseness due to vibration.**

Dimensions

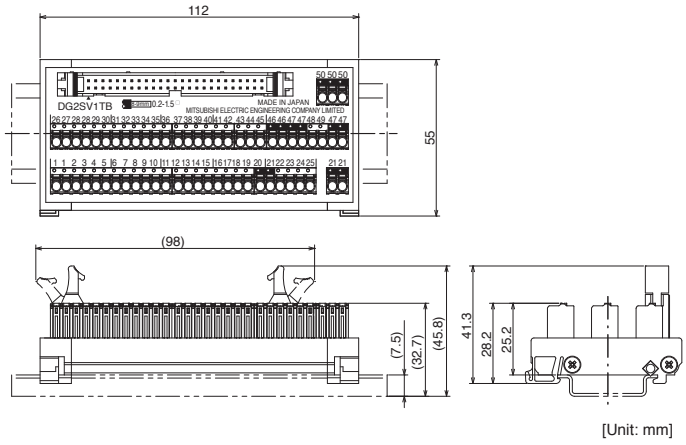

[Unit: mm]

Specifications

Ambient temperature	Operation	0 ˚C to 55 ˚C (non-freezing)
	Storage	-20 ˚C to 65 ˚C (non-freezing)
Ambient humidity	Operation	5 %RH to 90 %RH (non-condensing)
	Storage	
Ambience		Indoors (no direct sunlight); no corrosive gas, inflammable gas, oil mist or dust
Altitude		2000 m or less
Vibration resistance		5.9 m/s^2, at 10 Hz to 55 Hz (directions of X, Y, and Z axes)
External power supply	Voltage	24 V DC ± 10 %
	Current capacity	1 A (max.)
Terminal block section	Terminal	Number of terminals: 60, number of cables per terminal: 1
	Applicable wire	0.2 mm^2 to 1.5 mm^2 (AWG 24 to 16), Wire insulator OD: ø2.8 mm or smaller
	Stripped length of wire	8 mm to 9 mm
Compliance with global standards	UL standard	UL61800-5-1
Unit installation	DIN rail	Applicable DIN rail: TH35-7.5Fe, TH35-7.5Al (JIS C 2812 compliant)
Mass [g]		Approx. 80

Product models

Item	Model
Junction terminal block for general-purpose interface servo amplifier	DG2SV1TB

Compatible servo amplifier		Connection cable
MELSERVO-J5 General-Purpose Interface Servo Amplifiers	MR-J5-A	DG4SV1CB05 (length: 0.5 m) DG4SV1CB10 (length: 1 m)

Servo Amplifier Connection Cable for Positioning Module



Features

- **This servo amplifier connection cable for Positioning module enables easy wiring when the MELSEC Positioning module is used to control the MR-J5-A.**

Dimensions

■FA-CBLQ75M2J3/PM2J3

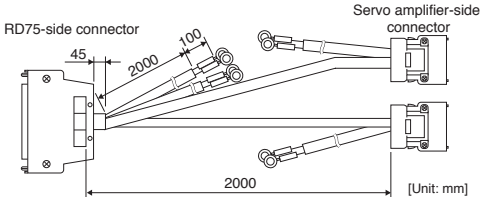

[Unit: mm]

■FA-CBLQ75M2J3-P

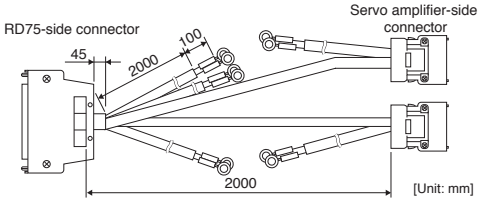

[Unit: mm]

Product models

Positioning module model	Servo amplifier model	Connection cable
RD75D2 RD75D4 FX5-20PG-D	MR-J5-A	FA-CBLQ75M2J3-P (with pulsar cables) FA-CBLQ75M2J3 (without pulsar cables)
RD75P2 RD75P4 FX5-20PG-P	MR-J5-A	FA-CBLQ75PM2J3 (without pulsar cables)

Drive Goods Junction Terminal Block



Features

- **With this junction terminal block, the footprint is approximately 40 % smaller than the screw type terminal block.**
- **Thanks to the spring clamp terminal block, tightening screws is not required. Retightening the screws at a regular inspection is not necessary because of no screw looseness due to vibration.**

Dimensions

■DG2SV3TB

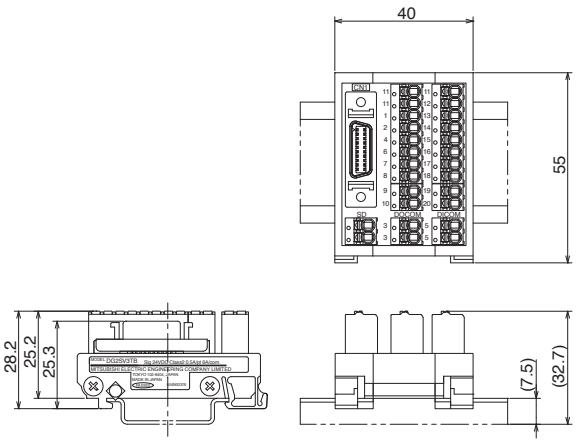

[Unit: mm]

■DG4SV2CB_

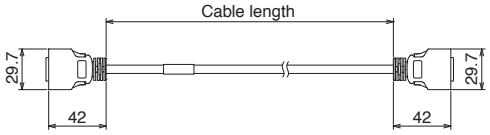

[Unit: mm]

Specifications

Ambient temperature	Operation	0 ˚C to 55 ˚C (non-freezing)
	Storage	-20 ˚C to 65 ˚C (non-freezing)
Ambient humidity	Operation	5 %RH to 90 %RH (non-condensing)
	Storage	
Ambience		Indoors (no direct sunlight); no corrosive gas, inflammable gas, oil mist or dust
Altitude		2000 m or less
Vibration resistance		5.9 m/s², at 10 Hz to 55 Hz (directions of X, Y, and Z axes)
External power supply	Voltage	24 V DC ± 10 %
	Current capacity	Signal: 0.5 A, common line: 6 A
Terminal block section	Terminal	Number of terminals: 26, number of cables per terminal: 1
	Applicable wire	0.2 mm² to 1.5 mm² (AWG 24 to 16), Wire insulator OD: ø2.8 mm or smaller
	Stripped length of wire	8 mm to 9 mm
Compliance with global standards	UL standard	UL61800-5-1
Unit installation	DIN rail	Applicable DIN rail: TH35-7.5Fe, TH35-7.5Al (JIS C 2812 compliant)
Mass [g]		Approx. 40

Product models

Item	Model
Junction Terminal Block	DG2SV3TB

Servo amplifier model	Connection cable
MR-J5-G	DG4SV2CB05 (length: 0.5 m) DG4SV2CB10 (length: 1 m) DG4SV2CB50 (length: 5 m)

For the inquiry of Mitsubishi Electric Engineering products,
please contact the following email address. (Supported languages: English and Japanese).

fagoods.products.faq@mitsubishielectricengineering.com

Regenerative Option

G G-RJ WG A A-RJ

Servo amplifier model	Permissible regenerative power [W] (Note 2)								
	Built-in regenerative resistor	Regenerative option							
		MR-RB							
		032	12	14	30	3N	34	50 (Note 1)	5N (Note 1)
		40 Ω	40 Ω	26 Ω	13 Ω	9 Ω	26 Ω	13 Ω	9 Ω
MR-J5-10G/A	-	30	-	-	-	-	-	-	-
MR-J5-20G/A	10	30	100	-	-	-	-	-	-
MR-J5-40G/A	10	30	100	-	-	-	-	-	-
MR-J5-60G/A	10	30	100	-	-	-	-	-	-
MR-J5-70G/A	30	-	-	100	-	-	300	-	-
MR-J5-100G/A	30	-	-	100	-	-	300	-	-
MR-J5-200G/A	100	-	-	-	300	-	-	500	-
MR-J5-350G/A	100	-	-	-	-	300	-	-	500
MR-J5W2-22G	20	-	-	100	-	-	-	-	-
MR-J5W2-44G	20	-	-	100	-	-	-	-	-
MR-J5W2-77G	100	-	-	-	-	300	-	-	-
MR-J5W2-1010G	100	-	-	-	-	300	-	-	-
MR-J5W3-222G	30	-	-	100	-	-	300	-	-
MR-J5W3-444G	30	-	-	100	-	-	300	-	-

Notes: 1. Cool the unit forcibly with a cooling fan (92 mm × 92 mm, minimum air flow: 1.0 m^3/min). The cooling fan must be prepared by users.
2. The power values in this table are resistor-generated powers, not rated powers.

* Precautions when connecting the regenerative option

1. The regenerative option causes a temperature rise of 100 °C or higher relative to the ambient temperature. Fully examine heat dissipation, installation position, wires used before installing the unit. Use flame-retardant wires or apply flame retardant on wires, and keep the wires clear of the unit.
2. Use twisted wires for connecting the regenerative option to the servo amplifier, and keep the wire length to a maximum of 5 m.
3. Use twisted wires for connecting a thermal sensor so that the sensor does not fail to work properly because of inducted noise.

Regenerative Option

G G-RJ WG A A-RJ

Dimensions [Unit: mm]

MR-RB032

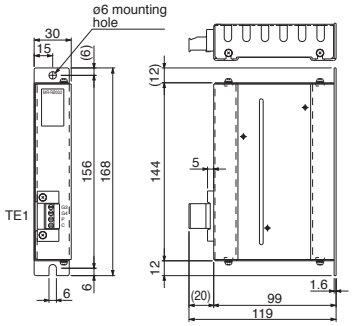

Terminal arrangement

TE1

G3
G4
P
C

Applicable wire size (Note 3):
0.2 mm² to 2.5 mm² (AWG 24 to 12)
Mounting screw size: M5

Model	Mass [kg]
MR-RB032	0.5

MR-RB12, MR-RB14

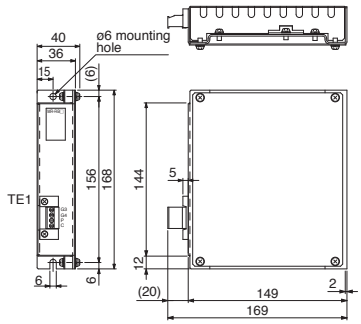

Terminal arrangement

TE1

G3
G4
P
C

Applicable wire size (Note 3):
0.2 mm² to 2.5 mm² (AWG 24 to 12)
Mounting screw size: M5

Model	Mass [kg]
MR-RB12 MR-RB14	1.1

Connections

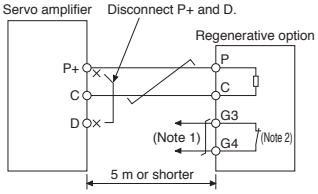

Notes: 1. Create a sequence circuit that turns off the magnetic contactor when abnormal overheating occurs.
2. G3 and G4 terminals are thermal sensor. G3-G4 opens when the regenerative option overheats abnormally.
3. The wire size shows wiring specifications of the connector. Refer to "Wires, Molded-Case Circuit Breakers, and Magnetic Contactors" in this catalog for examples of wire size selection.

Regenerative Option

G | G-RJ | WG | A | A-RJ

Dimensions [Unit: mm]

MR-RB30, MR-RB3N, MR-RB34

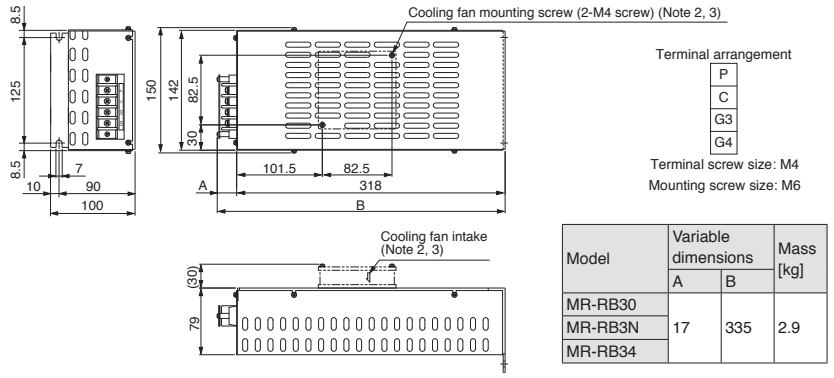

Model	Variable dimensions		Mass [kg]
	A	B	
MR-RB30	17	335	2.9
MR-RB3N			
MR-RB34			

MR-RB50, MR-RB5N

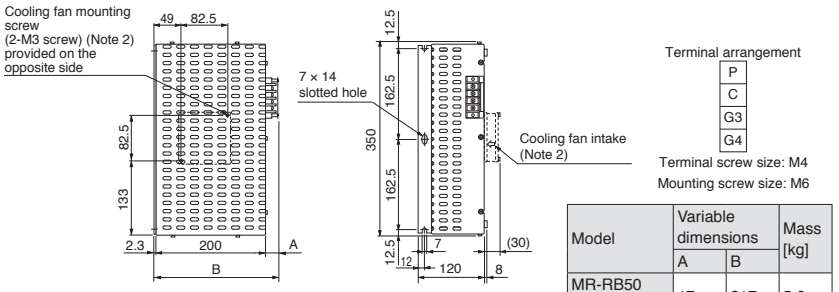

Model	Variable dimensions		Mass [kg]
	A	B	
MR-RB50	17	217	5.6
MR-RB5N			

Connections

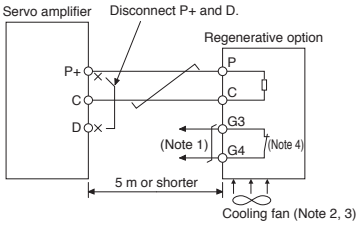

Notes: 1. Create a sequence circuit that turns off the magnetic contactor when abnormal overheating occurs.
2. When using MR-RB50 or MR-RB5N, cool the unit forcibly with a cooling fan (92 mm × 92 mm, minimum air flow: 1.0 m^3/min). The cooling fan must be prepared by users.
3. When MR-RB30, MR-RB3N, or MR-RB34 is used, it may be necessary to cool the unit forcibly with a cooling fan (92 mm × 92 mm, minimum air flow: 1.0 m^3/min), depending on the operating environment.
Refer to "MR-J5 User's Manual" for details. The cooling fan must be prepared by user.
4. G3 and G4 terminals are thermal sensor. G3-G4 opens when the regenerative option overheats abnormally.

Simple Converter (MR-CM)

G | G-RJ | WG | A | A-RJ

Specifications

Simple converter unit model				MR-CM3K
Converter output	Rated voltage			270 V DC to 324 V DC
	Rated current	3-phase power supply input	[A]	20
Main circuit power supply input	Voltage/frequency			3-phase 200 V AC to 240 V AC, 50 Hz/60 Hz
	Rated current	3-phase power supply input	[A]	16
	Permissible voltage fluctuation			3-phase 170 V AC to 264 V AC
Overheat detection function	Thermal sensor			The contact between TH1 and TH2 opens when the thermal sensor detects an overheat condition.
	Contact specification	Maximum voltage		110 V AC/DC
		Maximum current		0.3 A at 20 V DC
		Minimum current		0.1 mA at 1 V DC
		Maximum capacity		6 VA
Compatible servo amplifier				MR-J5-10G/A to MR-J5-200G/A, MR-J5W2-22G to MR-J5W2-1010G, MR-J5W3-222G, MR-J5W3-444G
Maximum number of connectable servo amplifiers				6 units
Total capacity of servo amplifiers to be driven			[kW]	3
Continuous rating			[kW]	3
Instantaneous maximum rating			[kW]	9
Structure (IP rating)				IP20
Close mounting				Possible
Environment				The operating environment is the same as that of the servo amplifiers. Refer to "1. Common Specifications" in this catalog.
Mass			[kg]	0.7

Dimensions

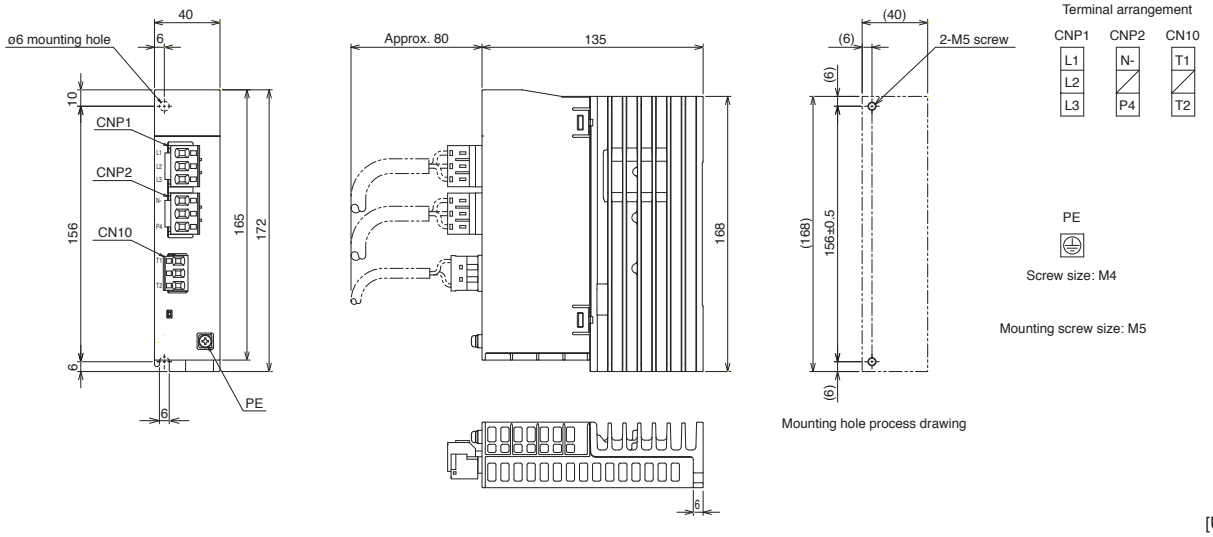

[Unit: mm]

Simple Converter (MR-CM)

G G-RJ WG A A-RJ

Connection example

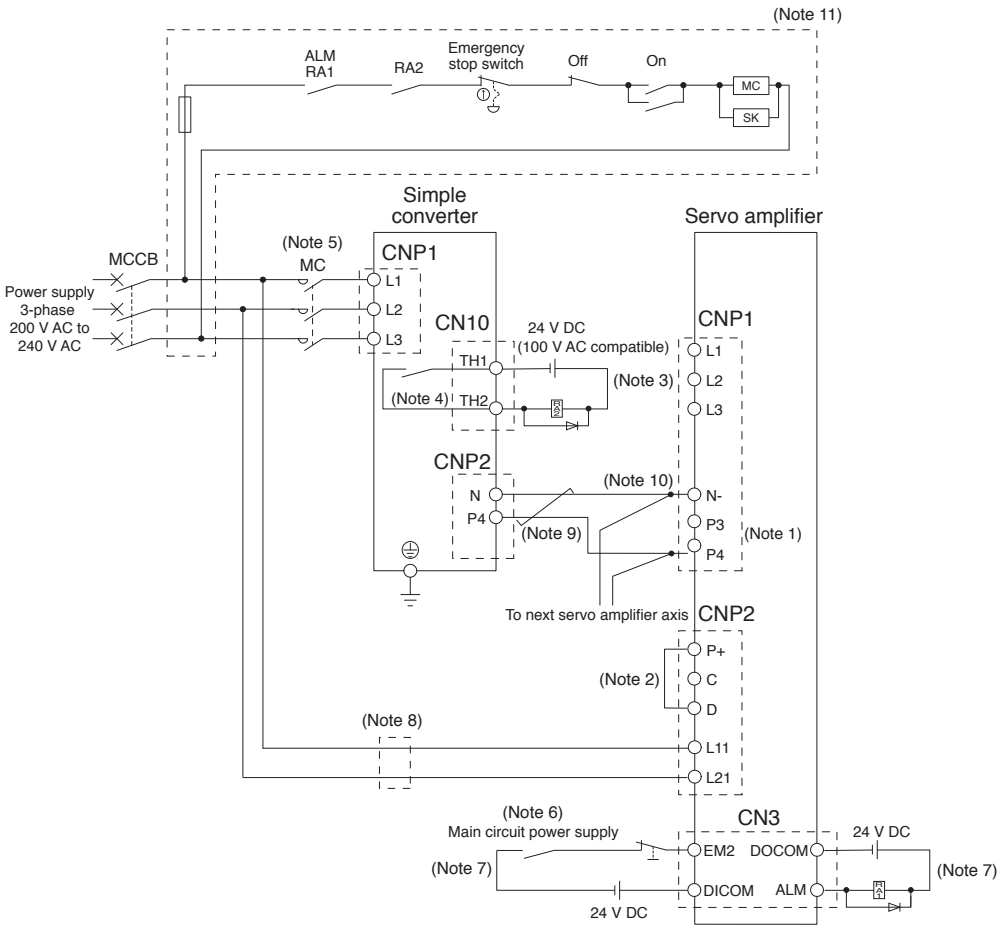

Notes:
1. Connect a simple converter and a servo amplifier after disconnecting the short-circuit bar between P3 and P4.
2. Connect P+ and D.
3. Do not wire L1/L2/L3 of the servo amplifier when using the simple converter.
4. The contact between TH1 and TH2 opens when the thermal sensor detects an overheat condition.
5. Use a magnetic contactor with an operation delay time of 80 ms or less. The operation delay time is the time interval from current being applied to the coil until closure of contacts.
6. To prevent an unexpected restart of the servo amplifier, create a circuit to turn off EM2 (Forced stop 2) when the main circuit power is turned off.
7. Stop commands from the controller as soon as the main circuit power supply is turned off when an alarm occurs even in one servo amplifier.
8. Install an overcurrent protection device (molded-case circuit breaker, fuse, etc.) to protect the branch circuit.
9. Twist or bundle the wires between the simple converter and the servo amplifier with cable ties to keep the two wires close to each other. Keep the total wiring length between the simple converter and each servo amplifier 5 m or shorter.
10. The following ferrule is also usable to branch off the wirings (for two wires: AI-TWIN2×1.5-10BK).
11. To turn on/off the main circuit power supply by a DC power supply, wire the circuit as follows. Do not use the 24 V DC interface power supply for the magnetic contactor. Provide a dedicated power supply to the magnetic contactor.

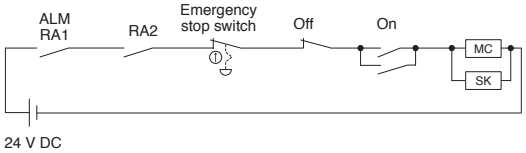

Battery

G G-RJ A A-RJ

Use the battery to configure an absolute position detection system with a direct drive motor. The absolute position data can be retained when the battery is mounted on the servo amplifier. The battery is not required for rotary servo motors and linear servo motors. When the battery life runs out, please replace the built-in MR-BAT6V1 battery. Refer to "MR-J5 User's Manual" for installation of the battery.

MR-BAT6V1SET

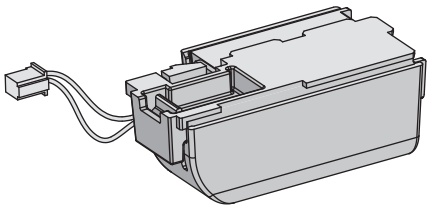

MR-BAT6V1SET-A

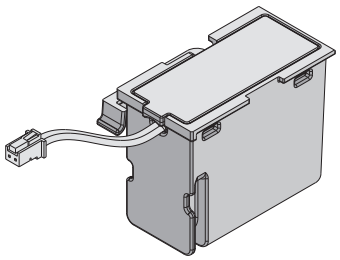

Model		MR-BAT6V1SET/MR-BAT6V1SET-A
Nominal voltage	[V]	6
Nominal capacity	[mAh]	1650
Lithium content	[g]	1.2
Primary battery		2CR17335A (CR17335A × 2 pcs. in series)
Mass	[g]	55

* MR-J3BAT battery cannot be used because of the difference in voltage.
* MR-BAT6V1 is an assembled battery composed of lithium metal batteries of CR17335A. This battery is not subject to the dangerous goods (Class 9) of the UN Recommendations.
  To transport lithium metal batteries and lithium metal batteries contained in equipment, take actions to comply with the following regulations: the United Nations Recommendations on the Transport of Dangerous Goods, the Technical Instruction (ICAO-TI) by the International Civil Aviation Organization (ICAO), and the International Maritime Dangerous Goods Code (IMDG Code) by the International Maritime Organization (IMO). To transport the batteries, check the latest standards or the laws of the destination country and take actions. Contact your local sales office for more details.

Battery Case (MR-BT6VCASE) and Battery (MR-BAT6V1)

G G-RJ WG A A-RJ

Absolute position data of up to four axes of direct drive motors can be retained when the battery case and the batteries are used. Direct drive motors used in incremental systems are also included in the number of the connectable axes. The battery cases and batteries can be used in systems including single-axis servo amplifiers and multi-axis servo amplifiers.
The case stores five batteries by connecting to the connectors. The batteries are not included in the battery case. Please purchase the batteries separately.

Dimensions (assembled) [Unit: mm]

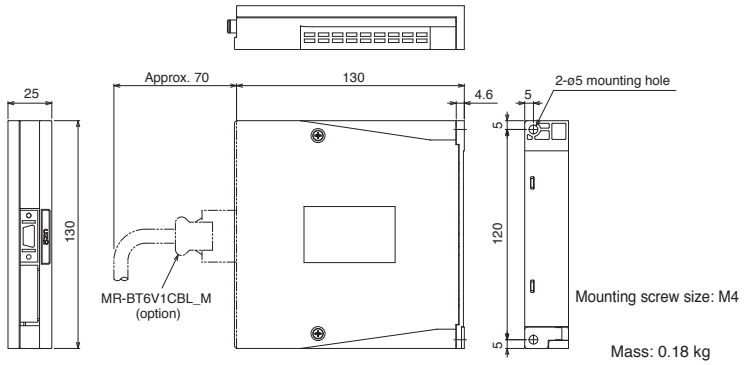

MR-BAT6V1

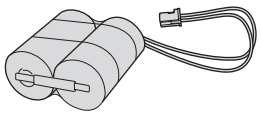

Model		MR-BAT6V1
Nominal voltage	[V]	6
Nominal capacity	[mAh]	1650
Lithium content	[g]	1.2
Primary battery		2CR17335A (CR17335A × 2 pcs. in series)
Mass	[g]	34

* MR-BAT6V1 is an assembled battery composed of lithium metal batteries of CR17335A. This battery is not subject to the dangerous goods (Class 9) of the UN Recommendations. To transport lithium metal batteries and lithium metal batteries contained in equipment, take actions to comply with the following regulations: the United Nations Recommendations on the Transport of Dangerous Goods, the Technical Instruction (ICAO-TI) by the International Civil Aviation Organization (ICAO), and the International Maritime Dangerous Goods Code (IMDG Code) by the International Maritime Organization (IMO). To transport the batteries, check the latest standards or the laws of the destination country and take actions. Contact your local sales office for more details.

Connections

One unit of servo amplifier

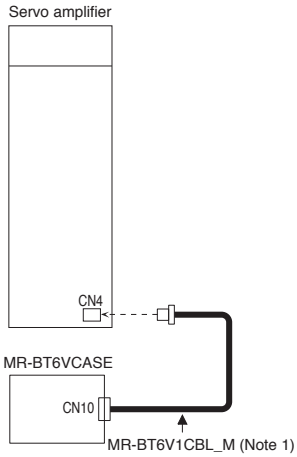

Up to four servo amplifier axes

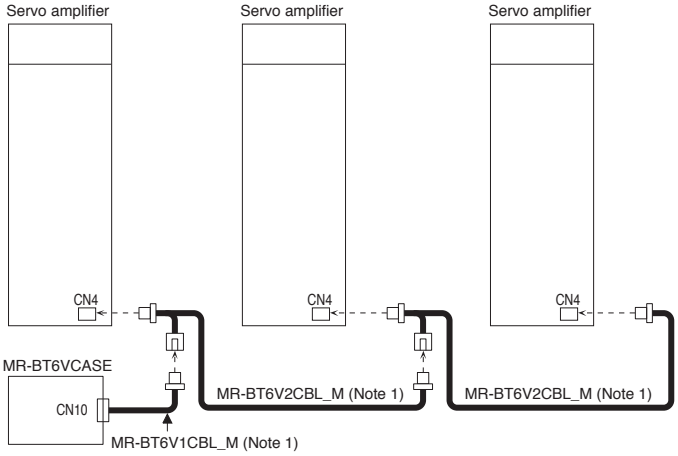

Notes: 1. This is an option cable. Refer to "Cables and Connectors for Servo Amplifiers" in this catalog.

Absolute Position Storage Unit (MR-BTAS01)

G G-RJ WG A A-RJ

This absolute position storage unit is required for configuring an absolute position detection system using the direct drive motor. This unit is not required when the servo system is used in incremental system.

Dimensions [Unit: mm]

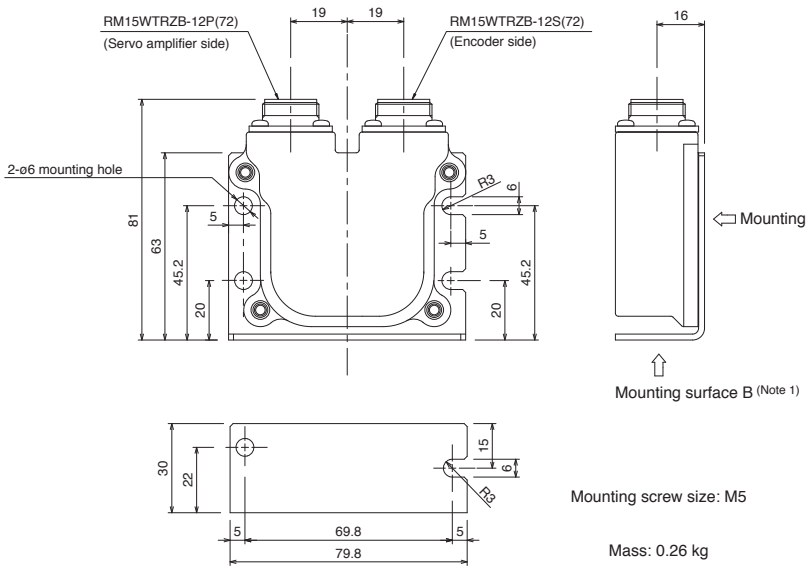

Mounting screw size: M5

Mass: 0.26 kg

Item	Environment
Ambient temperature	Operation: 0 ˚C to 55 ˚C (non-freezing), Storage: -20 ˚C to 65 ˚C (non-freezing)
Ambient humidity	Operation: 10 %RH to 90 %RH (non-condensing), Storage: 10 %RH to 90 %RH (non-condensing)
Ambience	Indoors (no direct sunlight); no corrosive gas, inflammable gas, oil mist, dust or splash of oil or water
Altitude	2000 m or less
Vibration resistance	When the surface A is mounted: 49 m/s^2 (directions of X, Y, and Z axes) When the surface B is mounted: 5.9 m/s^2 (directions of X, Y, and Z axes)

Notes: 1. When mounting the absolute position storage unit outside a cabinet, mount the surface A with four screws. When mounting the unit inside a cabinet, mounting the surface B with two screws is also possible.

Replacement Fan Unit (MR-J5-FAN)

G G-RJ WG A A-RJ

The cooling fan of the servo amplifier has a fan and a fan cover as a unit. Replace the fan unit when the fan needs to be replaced. Refer to "MR-J5 User's Manual" for replacement of the cooling fan.

Servo amplifier model	Replacement fan unit model
MR-J5-70G/A MR-J5-100G/A	MR-J5-FAN1
MR-J5-200G/A MR-J5-350G/A	MR-J5-FAN2
MR-J5W2-44G	MR-J5W-FAN1
MR-J5W2-77G MR-J5W2-1010G	MR-J5W-FAN3
MR-J5W3-222G MR-J5W3-444G	MR-J5W-FAN2

[Products on the Market]

Junction Terminal Block (PS7DW-20V14B-F)

G G-RJ

This terminal block is used for wiring signals.

External appearance

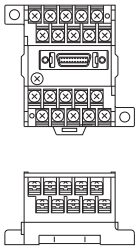

Toho Technology Corp.
Kyoto Factory

Applicable wire: 1.25 mm² maximum

[Products on the Market]

Junction Terminal Block (DG2SV3TB), Servo Amplifier Connection Cable (DG4SV2CB_)

G G-RJ

This terminal block is used for wiring signals.

Dimensions [Unit: mm]

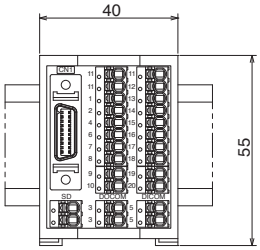

Mitsubishi Electric Engineering Co., Ltd.

Applicable wire: 1.5 mm² maximum
(Wire insulator OD: ø2.8 mm or smaller)

Junction Terminal Block (MR-TB26A)

WG

This terminal block is used for wiring signals.

Dimensions (Note 1) [Unit: mm]

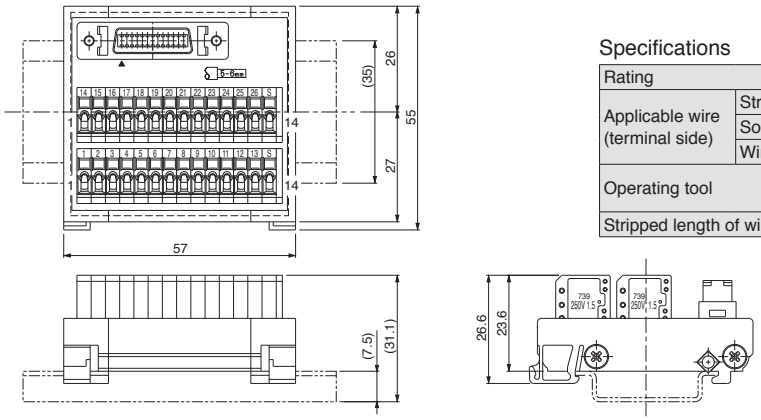

Specifications

Rating		32 V AC/DC, 0.5 A
Applicable wire (terminal side)	Stranded wire	0.08 mm² to 1.5 mm² (AWG 28 to 14)
	Solid wire	ø0.32 mm to 1.2 mm
	Wire insulator OD	3.4 mm or smaller
Operating tool		210-619 (WAGO) or an equivalent 210-119SB (WAGO) or an equivalent
Stripped length of wire		5 mm to 6 mm

Notes: 1. The lengths in brackets are applicable when the junction terminal block is mounted on a 35 mm wide DIN rail.

Junction Terminal Block (MR-TB50)

A A-RJ

This terminal block is used for wiring signals.

Dimensions [Unit: mm]

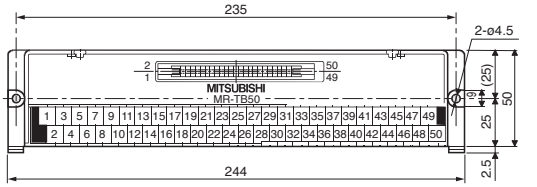

Terminal screw size: M3.5
Applicable wire: 2 mm² maximum
Crimp terminal width: 7.2 mm or shorter
Mounting screw size: M4

[Products on the Market]

Junction Terminal Block (DG2SV1TB), Servo Amplifier Connection Cable (DG4SV1CB_)

A A-RJ

This terminal block is used for wiring signals.

Dimensions [Unit: mm]

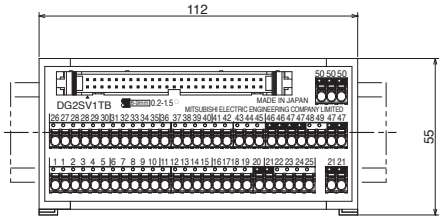

Mitsubishi Electric Engineering Co., Ltd.

Applicable wire: 1.5 mm² maximum (Wire insulator OD: ø2.8 mm or smaller)

Radio Noise Filter (FR-BIF)

G G-RJ WG A A-RJ

This filter suppresses noise from the power supply side of the servo amplifier, especially effective for the radio frequency bands of 10 MHz or lower. The FR-BIF is designed to be installed on the input side.

Dimensions [Unit: mm]	Connections
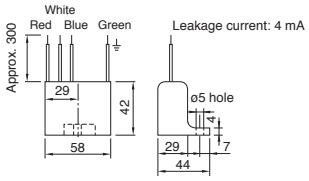	Do not use the FR-BIF on the output side of the servo amplifier. Wiring should be as short as possible. Grounding is required. Insulate the unused wire when using the FR-BIF with a 1-phase power supply. 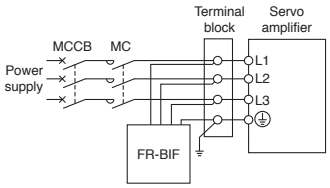

Line Noise Filter (FR-BSF01)

G G-RJ WG A A-RJ

This filter is effective in suppressing radio noise emitted from the power supply side or the output side of the servo amplifier, and also in suppressing high-frequency leakage current (zero-phase current), especially within 0.5 MHz to 5 MHz band.

Dimensions [Unit: mm]	Connections
FR-BSF01 For wire size of 3.5 mm² (AWG 12) or smaller 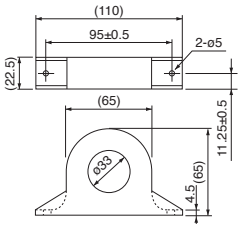	The line noise filters can be mounted on lines of the main circuit power supply (L1, L2, and L3) and of the servo motor power (U, V, and W). Pass each of the wires through the line noise filter an equal number of times in the same direction. For wires of the main circuit power supply, the effect of the filter rises as the number of passes increases, but generally four passes would be appropriate. For the servo motor power lines, passes must be four times or less. Do not pass the grounding wire through the filter. Otherwise, the effect of the filter will drop. Wind the wires by passing through the filter to satisfy the required number of passes as shown in Example 1. If the wires are too thick to wind, use two or more filters to have the required number of passes as shown in Example 2. Place the line noise filters as close to the servo amplifier as possible for their best performance. Example 1 Example 2 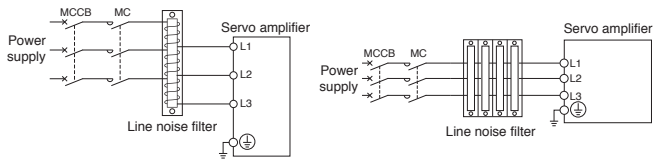

Data Line Filter

G G-RJ WG A A-RJ

This filter is effective in preventing noise when attached to the pulse output cable of the pulse train output controller or the motor encoder cable.

Example) ESD-SR-250 (manufactured by NEC TOKIN Corporation)
ZCAT3035-1330 (manufactured by TDK)
GRFC-13 (manufactured by Kitagawa Industries Co., Ltd.)
E04SRM563218 (manufactured by Seiwa Electric Mfg. Co. Ltd.)

Surge Killer

G G-RJ WG A A-RJ

Attach surge killers to AC relays and AC valves around the servo amplifier. Attach diodes to DC relays and DC valves.

Example) Surge killer: CR-50500 (manufactured by Okaya Electric Industries Co., Ltd.)
Diode: A diode with breakdown voltage four or more times greater than the relay drive voltage, and with current capacity two or more times greater than the relay drive current.

Surge Protector

G G-RJ WG A A-RJ

Attach surge protectors of RSPD series (manufactured by Okaya Electric Industries Co., Ltd.) or LT-CS-WS series (manufactured by Soshin Electric Co., Ltd.) to the servo amplifiers.

EMC Filter

G G-RJ WG A A-RJ

The following filters are recommended as a filter compliant with the EMC directive for the power supply of the servo amplifier.
A surge protector is separately required to use the filters. Refer to "EMC Installation Guidelines" for details.
Fulfill the following requirements when connecting several units of servo amplifiers to one EMC filter.

- Rated voltage [V] of EMC filter ≥ Rated input voltage [V] of servo amplifier
- Rated current [A] of EMC filter ≥ Total rated input current [A] of servo amplifiers connected to EMC filter

Operating environment	Total length of servo motor power cables	EMC Filter						
		Model	Rated current [A]	Rated voltage [V AC]	Operating temperature [°C]	Mass [kg]	Fig.	Manufacturer
IEC/EN 61800-3 Category C2/C3 (Note 1)	50 m or shorter	FSB-10-254-HU	10	500	-40 to 85	1.8	A	COSEL Co., Ltd.
		FSB-20-254-HU	20					
		FSB-30-254-HU	30					
IEC/EN 61800-3 Category C3 (Note 1)		HF3010C-SZB	10	500	-20 to 50	0.9	B	Soshin Electric Co., Ltd.
		HF3020C-SZB	20			1.3		
		HF3030C-SZB	30					
	100 m or shorter	HF3030C-SZL	30	500	-20 to 50	1.3	C	Soshin Electric Co., Ltd.
	200 m or shorter	HF3060C-SZL	60			2.1		
	250 m or shorter	HF3100C-SZL	100			5.8		
	250 m or shorter	HF3150C-SZL	150			9.0		

Notes: 1. Category C2: first environment (residential, commercial, light industrial, and industrial environments)
Category C3: second environment (commercial, light industrial, and industrial environments)

EMC Filter

G G-RJ WG A A-RJ

Connections

3-phase 200 V AC

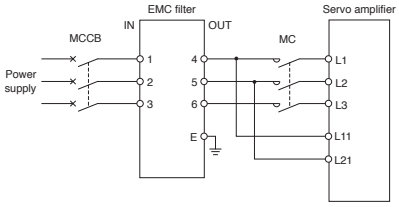

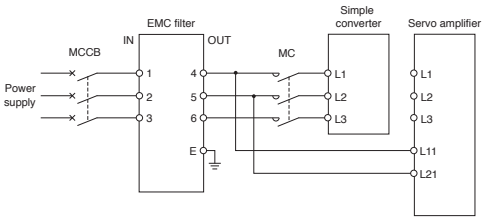

1-phase 200 V AC

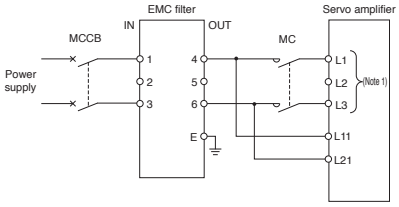

Notes: 1. Connect the power supply to L1 and L3 terminals. Do not connect anything to L2.

Dimensions

[Unit: mm]

A

FSB-10-254-HU/FSB-20-254-HU/FSB-30-254-HU

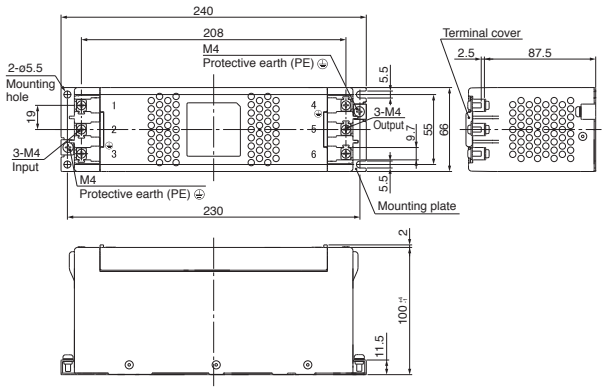

B

HF3010C-SZB/HF3020C-SZB/HF3030C-SZB

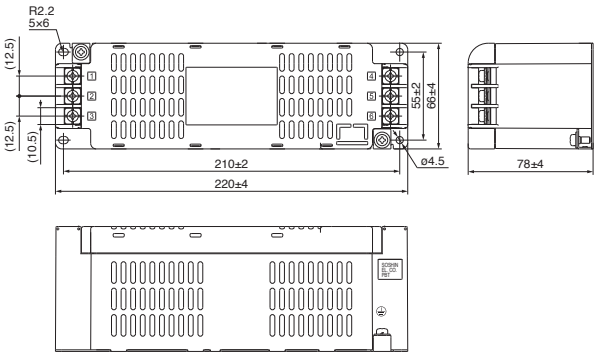

C

HF3030C-SZL/HF3060C-SZL/HF3100C-SZL/HF3150C-SZL

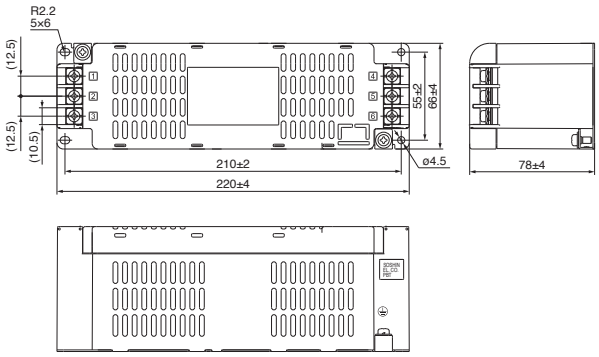

Power Factor Improving DC Reactor (FR-HEL)

G G-RJ A A-RJ

This boosts the power factor of servo amplifier and reduces the power supply capacity.
Use either the DC reactor or the AC reactor.
As compared to the AC reactor (FR-HAL), the DC reactor (FR-HEL) is more recommended since the DC reactor is more effective in power factor improvement, smaller and lighter, and its wiring is easier. (The DC reactor uses two wires, while the AC reactor uses six wires.)

Servo amplifier model	Power factor improving DC reactor model	Fig.
MR-J5-10G/A	FR-HEL-0.4K	A
MR-J5-20G/A		
MR-J5-40G/A	FR-HEL-0.75K	
MR-J5-60G/A	FR-HEL-1.5K	
MR-J5-70G/A		
MR-J5-100G/A	FR-HEL-2.2K	
MR-J5-200G/A	FR-HEL-3.7K	B
MR-J5-350G/A	FR-HEL-7.5K	

Connections

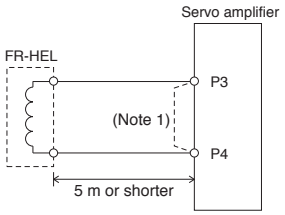

Notes: 1. Disconnect a short-circuit bar between P3 and P4 when using the power factor improving DC reactor.

Dimensions

A

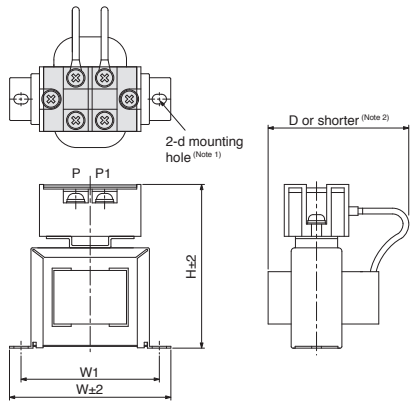

Model	Variable dimensions [mm]					Mass [kg]	Terminal screw size	Wire size (Note 3) [mm²]
	W	W1	H	D	d			
FR-HEL-0.4K	70	60	71	61	M4	0.4	M4	2 (AWG 14)
FR-HEL-0.75K	85	74	81	61	M4	0.5	M4	2 (AWG 14)
FR-HEL-1.5K	85	74	81	70	M4	0.8	M4	2 (AWG 14)
FR-HEL-2.2K	85	74	81	70	M4	0.9	M4	2 (AWG 14)

B

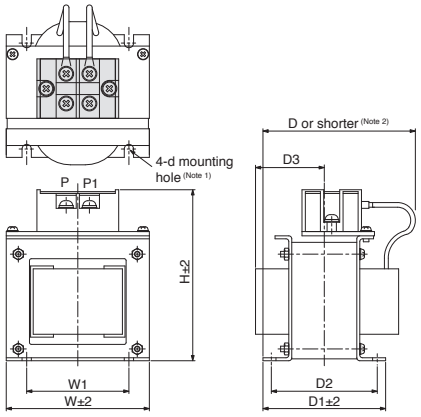

Model	Variable dimensions [mm]								Mass [kg]	Terminal screw size	Wire size (Note 3) [mm²]
	W	W1	H	D	D1	D2	D3	d			
FR-HEL-3.7K	77	55	92	82	66	57	37	M4	1.5	M4	2 (AWG 14)
FR-HEL-7.5K	86	60	113	98	81	72	43	M4	2.5	M5	3.5 (AWG 12)

Notes: 1. Use this mounting hole for grounding.
2. This indicates the maximum dimension. The dimension varies depending on the bending degree of the input/output lines.
3. The wire size is applicable when 600 V grade heat-resistant polyvinyl chloride insulated wires (HIV wires) are used.

Power Factor Improving AC Reactor (FR-HAL)

G | G-RJ | WG | A | A-RJ

This boosts the power factor of servo amplifier and reduces the power supply capacity.

MR-J5-G/A, MR-CM3K

Servo amplifier/ simple converter model	Power factor improving AC reactor model (Note 2)	Fig.
MR-J5-10G/A	FR-HAL-0.4K	A
MR-J5-20G/A		
MR-J5-40G/A	FR-HAL-0.75K	
MR-J5-60G/A	FR-HAL-1.5K	
MR-J5-70G/A		
MR-J5-100G/A (3-phase power supply input)	FR-HAL-2.2K	
MR-J5-100G/A (1-phase power supply input)	FR-HAL-3.7K	
MR-J5-200G/A (3-phase power supply input)		
MR-J5-200G/A (1-phase power supply input)	FR-HAL-5.5K	
MR-J5-350G/A MR-CM3K	FR-HAL-7.5K	B

MR-J5W2-G (Note 1)

Total output of rotary servo motors	Total continuous thrust of linear servo motors	Total output of direct drive motors	Power factor improving AC reactor model (Note 2)	Fig.
450 W or smaller	150 N or less	100 W or smaller	FR-HAL-0.75K	A
Over 450 W to 600 W	Over 150 N to 240 N	Over 100 W to 377 W	FR-HAL-1.5K	
Over 600 W to 1 kW	Over 240 N to 300 N	Over 377 W to 545 W	FR-HAL-2.2K	
Over 1 kW to 2 kW	Over 300 N to 720 N	Over 545 W to 838 W	FR-HAL-3.7K	

MR-J5W3-G (Note 1)

Total output of rotary servo motors	Total continuous thrust of linear servo motors	Total output of direct drive motors	Power factor improving AC reactor model (Note 2)	Fig.
450 W or smaller	150 N or less	-	FR-HAL-0.75K	A
Over 450 W to 600 W	Over 150 N to 240 N	378 W or smaller	FR-HAL-1.5K	
Over 600 W to 1 kW	Over 240 N to 300 N	-	FR-HAL-2.2K	
Over 1 kW to 2 kW	Over 300 N to 450 N	-	FR-HAL-3.7K	

Notes: 1. Refer to "MR-J5 User's Manual" for selecting a power factor improving AC reactor when combining multiple servo motors among the rotary servo motor, the linear servo motor or the direct drive motor.
2. When using the power factor improving AC reactor, install one reactor for each servo amplifier.

Connections

3-phase 200 V AC

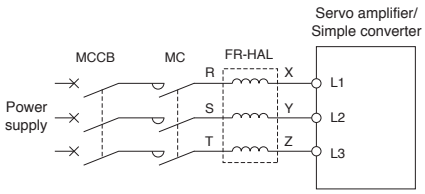

1-phase 200 V AC

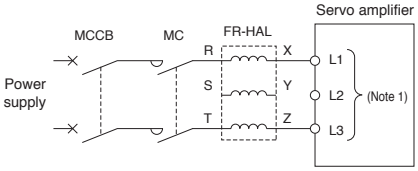

Notes: 1. Connect the power supply to L1 and L3 terminals. Do not connect anything to L2.

Power Factor Improving AC Reactor (FR-HAL)

G G-RJ WG A A-RJ

Dimensions

A

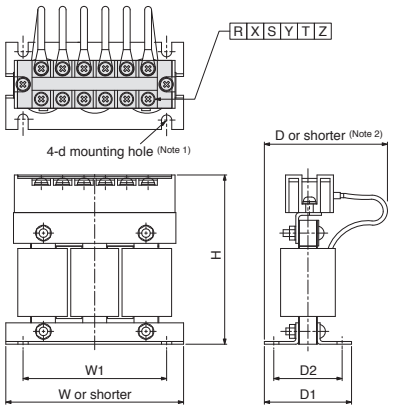

Model	Variable dimensions [mm]							Mass [kg]	Terminal screw size
	W	W1	H	D	D1	D2	d		
FR-HAL-0.4K	104±2	84	99	72	51	40	M5	0.6	M4
FR-HAL-0.75K	104±2	84	99	74	56	44	M5	0.8	M4
FR-HAL-1.5K	104±2	84	99	77	61	50	M5	1.1	M4
FR-HAL-2.2K	115 (Note 2)	40	115	77	71	57	M6	1.5	M4
FR-HAL-3.7K	115 (Note 2)	40	115	83	81	67	M6	2.2	M4
FR-HAL-5.5K	115 (Note 2)	40	115	83	81	67	M6	2.3	M4

B

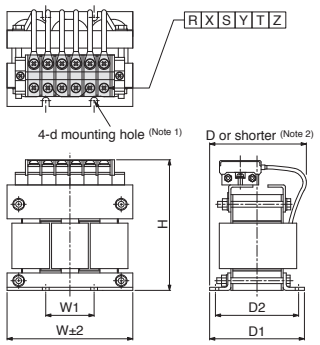

Model	Variable dimensions [mm]							Mass [kg]	Terminal screw size
	W	W1	H	D	D1	D2	d		
FR-HAL-7.5K	130	50	135	100	98	86	M6	4.2	M5

Notes: 1. Use this mounting hole for grounding.
2. This indicates the maximum dimension. The dimension varies depending on the bending degree of the input/output lines.

Servo Support Software

Drive System Sizing Software Motorizer (Note 1)

G G-RJ WG A A-RJ

Specifications

Item	Description
Types of motor/drive	Servo, inverter, sensorless servo
Types of load mechanism	Ball screws, rack and pinions, roll feeds, rotary tables, carts, elevators/hoists, conveyors, fans, pumps, generic (rotary), generic (linear), linear servo
Types of transmission mechanism	Coupling, external gear reducer, V belt and pulley, toothed belt/roller chain
Operation pattern	Constant speed/pause, acceleration/deceleration, trapezoid, triangle, speed CSV file, MELSOFT LogViewer file
Types of input support of moment of inertia calculation function	Solid cylinder, hollow cylinder, disk, rectangular solid, truncated cone, sphere, generic
Sizing results	Result, motor type, motor, motor capacity, drive, drive capacity, effective torque, torque effective load rate, peak torque, peak load rate, effective torque at stop, effective load rate at stop, motor output, motor output rate, maximum speed, maximum speed rate, maximum load inertia moment, inertia moment ratio, regenerative power, regenerative load ratio, regenerative option, maximally increased torque, rated speed, brake, oil seal, structure specification, graph of motor side speed/motor side torque/motor output
Printing of output of results	Prints load mechanism, transmission mechanism, operation pattern, and sizing results.
Data saving	Load mechanism, transmission mechanism, operation pattern, motor selection, drive selection, and sizing results are saved with a file name.

Operating environment (Note 1)

Item	Description
OS	Microsoft® Windows® 10 (64-bit/32-bit)
	Microsoft® Windows® 8.1 (64-bit/32-bit)
	Microsoft® Windows® 7 (64-bit/32-bit) [Service Pack1 or later]
.NET Framework	.NET Framework 4.6 or later
CPU	Desktop PC: Intel® Celeron® processor 2.4 GHz or more recommended
	Laptop PC: Intel® Pentium® processor 1.9 GHz or more recommended
Memory	1 GB or more recommended (32-bit OS)
	2 GB or more recommended (64-bit OS)
Free hard disk space	For installation: 1 GB or more free hard disk capacity
	For operation: 512 MB or more free virtual memory capacity
Monitor	Resolution 1024x768 or more (XGA)
	Compatible with above personal computers.

Notes: 1. This software may not run correctly, depending on a personal computer.

Servo Support Software

MELSOFT

MR Configurator2 (SW1DNC-MRC2-E) (Note 1)

G | G-RJ | WG | A | A-RJ

MR Configurator2 can be obtained by either of the following:

- Purchase MR Configurator2 alone.
- Purchase GX Works3, EM78 SDK (available soon), or MT Works2: MR Configurator2 is included in GX Works3, EM78 SDK, and MT Works2 with software version 1.34L or later.
- Download MR Configurator2: If you have MELSOFT iQ Works, GX Works3, GX Works2, MT Works2, EM Software Development Kit, or CW Configurator, MR Configurator2 is available for free download.

Specification (Note 2)

Item	Description
Project	New/Open/Save/Save As/Delete Project, Read Other Format, Write Other Format, System Setting, Print
Parameter	Parameter setting, axis name setting, parameter converter
Safety	Safety parameter setting, Change password, Initialize password
Positioning-data	Point Table, Program, Indirect Addressing, Cam Data
Monitor	Display All, I/O Monitor, Graph, ABS Data Display
Diagnosis	Alarm Display, Alarm Onset Data, Drive recorder, No Motor Rotation, System Configuration, Life Diagnosis, Machine Diagnosis, Linear Diagnosis
Test Operation	JOG Operation, Positioning Operation, Motor-Less Operation, DO Forced Output, Program Operation, Single-Step Feed, Test Operation Information
Adjustment	One-Touch Tuning, Tuning, Machine Analyzer, Advanced Gain Search
Others	Servo Assistant, Update Parameter Setting Range, Machine Unit Conversion Setting, Switch Display Language, Help

Notes: 1. MELSERVO-J5 series is supported by MR Configurator2 with software version 1.100E or later.
2. Supported items vary depending on the servo amplifiers. Refer to "MR Configurator2 SW1DNC-MRC2-E Installation Guide" for details.

Operating environment (Note 1)

Components	Description	
OS (Note 2)	Microsoft® Windows® 10 Education Microsoft® Windows® 10 Enterprise Microsoft® Windows® 10 Pro Microsoft® Windows® 10 Home Microsoft® Windows® 8.1 Enterprise Microsoft® Windows® 8.1 Pro Microsoft® Windows® 8.1 Microsoft® Windows® 8 Enterprise Microsoft® Windows® 8 Pro Microsoft® Windows® 8	Microsoft® Windows® 7 Enterprise Microsoft® Windows® 7 Ultimate Microsoft® Windows® 7 Professional Microsoft® Windows® 7 Home Premium Microsoft® Windows® 7 Starter Microsoft® Windows Vista® Enterprise Microsoft® Windows Vista® Ultimate Microsoft® Windows Vista® Business Microsoft® Windows Vista® Home Premium Microsoft® Windows Vista® Home Basic Microsoft® Windows® XP Professional, Service Pack3 Microsoft® Windows® XP Home Edition, Service Pack3
CPU (recommended)	Desktop PC: Intel® Celeron® processor 2.8 GHz or more Laptop PC: Intel® Pentium® M processor 1.7 GHz or more	
Memory (recommended)	512 MB or more (32-bit OS), 1 GB or more (64-bit OS)	
Free hard disk space	1 GB or more	
Monitor	Resolution 1024 × 768 or more, 16-bit high color, Compatible with above personal computers.	
USB cable	MR-J3USBCBL3M	

Notes: 1. This software may not run correctly on some personal computers.
2. For 64-bit operating systems, this software is supported by Windows® 7 or later.

Unit Conversion Table

Quantity	SI (metric) unit	U.S. customary unit
Mass	1 [kg]	2.2046 [lb]
Length	1 [mm]	0.03937 [in]
Torque	1 [N•m]	141.6 [oz•in]
Moment of inertia	1 [(× 10^{-4} kg•m^2)]	5.4675 [oz•in^2]
Load (thrust load/axial load)	1 [N]	0.2248 [lbf]
Temperature	n [°C]	n × 9/5 + 32 [°F]

MEMO

8 Low-Voltage Switchgear/ Wires

Wires, Molded-Case Circuit Breakers, and Magnetic Contactors 8-2

Motor Circuit Breakers 8-4

Selection Example in HIV Wires for Servo Motors 8-5

G MR-J5-G **G-RJ** MR-J5-G-RJ **WG** MR-J5W2-G/MR-J5W3-G **A** MR-J5-A **A-RJ** MR-J5-A-RJ

* Only MR-J5-G and MR-J5-A are mentioned for the 1-axis servo amplifiers in this section. Note that options necessary for servo amplifiers with special specification are the same as those for standard servo amplifiers. Refer to the servo amplifiers with the same rated capacity.
* MR-J5-G-RJ and MR-J5-A-RJ are planned for a future release.
* Refer to p. 7-55 in this catalog for conversion of units.

Wires, Molded-Case Circuit Breakers, and Magnetic Contactors

The following are examples of wire sizes when 600 V grade heat-resistant polyvinyl chloride insulated wires (HIV wires) are used. The wire size for U, V, W, and ⏚ varies depending on the servo motor. Refer to "Selection Example in HIV Wires for Servo Motors" in this catalog for details on wires for each servo motor.

Wires and molded-case circuit breakers (MR-J5-G/MR-J5-A)

G **G-RJ** **A** **A-RJ**

Servo amplifier model	Molded-case circuit breaker (Note 4, 5, 6)	Wire size [mm²] (Note 4)			
		L1, L2, L3, ⏚	L11, L21	P+, C (Note 1)	U, V, W, ⏚
MR-J5-10G/A	30 A frame 5 A (30 A frame 5 A)	2 (AWG 14)	1.25 to 2 (AWG 16 to 14)	2 (AWG 14)	AWG 18 to 14 (Note 3)
MR-J5-20G/A	30 A frame 5 A (30 A frame 5 A)				
MR-J5-40G/A	30 A frame 10 A (30 A frame 5 A)				
MR-J5-60G/A	30 A frame 15 A (30 A frame 10 A)				
MR-J5-70G/A	30 A frame 15 A (30 A frame 10 A)				
MR-J5-100G/A (3-phase power input)	30 A frame 15 A (30 A frame 10 A)				
MR-J5-100G/A (1-phase power input)	30 A frame 15 A (30 A frame 15 A)				
MR-J5-200G/A (3-phase power input)	30 A frame 20 A (30 A frame 20 A)				
MR-J5-200G/A (1-phase power input)	30 A frame 20 A (30 A frame 20 A)	3.5 (AWG 12)			AWG 18 to 10 (Note 3)
MR-J5-350G/A	30 A frame 30 A (30 A frame 30 A)				

Magnetic contactor (MR-J5-G/MR-J5-A)

G **G-RJ** **A** **A-RJ**

Servo amplifier model	Magnetic contactor (Note 2, 5)	
	On/off of main circuit power supply	
	AC power supply	DC power supply
MR-J5-10G/A MR-J5-20G/A MR-J5-40G/A MR-J5-60G/A MR-J5-70G/A MR-J5-100G/A	S-T10	SD-T12
MR-J5-200G/A MR-J5-350G/A	S-T21	SD-T21

Simple converter (Note 8)

G **G-RJ** **WG** **A** **A-RJ**

Simple converter unit model	Molded-case circuit breaker (Note 4, 5)	Magnetic contactor (Note 2, 5)		Wire size [mm²] (Note 4, 7)	
		On/off of main circuit power supply		L1, L2, L3, ⏚	P4/N-
		AC power supply	DC power supply		
MR-CM3K	30 A frame 30 A (30 A frame 30 A)	S-T21	SD-T21	3.5 (AWG 12)	3.5 (AWG 12)

Notes: 1. Keep the wire length to the regenerative option within 5 m.
2. Use a magnetic contactor with an operation delay time of 80 ms or less. The operation delay time is the time interval from current being applied to the coil until closure of contacts.
3. The wire size shows applicable size for the servo amplifier connector.
4. When complying with IEC/EN/UL/CSA standard, refer to "MR-J5 User's Manual" or "MELSERVO-J5 Safety Instructions and Precautions for AC Servos" enclosed with the servo amplifier.
When using a power improving reactor, use a molded-case circuit breaker listed in the brackets.
5. Install one molded-case circuit breaker and one magnetic contactor for each servo amplifier.
6. Use a molded-case circuit breaker having the operation characteristics equal to or higher than Mitsubishi Electric general-purpose products.
7. Wires are selected based on the highest rated current among the servo motors to be combined.
8. These selection examples are for when one unit of servo amplifier is connected to the simple converter. When connecting multiple servo amplifiers, refer to "MR-J5 User's Manual".

Wires, Molded-Case Circuit Breakers, and Magnetic Contactors

The following are examples of wire sizes when 600 V grade heat-resistant polyvinyl chloride insulated wires (HIV wires) are used. The wire size for U, V, W, and ⏚ varies depending on the servo motor. Refer to "Selection Example in HIV Wires for Servo Motors" in this catalog for details on wires for each servo motor.

Wires (MR-J5W2-G and MR-J5W3-G)

WG

Servo amplifier model	Wire size [mm²] (Note 3)			
	L1, L2, L3, ⏚	L11, L21	P+, C (Note 5)	U, V, W, ⏚
MR-J5W2-22G	2 (AWG 14)	2 (AWG 14)	2 (AWG 14)	AWG 18 to 14 (Note 2)
MR-J5W2-44G				
MR-J5W2-77G				
MR-J5W2-1010G				
MR-J5W3-222G				
MR-J5W3-444G				

Molded-case circuit breakers (MR-J5W2-G) (Note 4)

WG

Total output of rotary servo motors	Total continuous thrust of linear servo motors	Total output of direct drive motors	Molded-case circuit breaker (Note 3, 6, 7)
300 W or less	-	-	30 A frame 5 A
Over 300 W to 600 W	150 N or less	100 W or less	30 A frame 10 A
Over 600 W to 1 kW	Over 150 N to 300 N	Over 100 W to 252 W	30 A frame 15 A
Over 1 kW to 2 kW	Over 300 N to 720 N	Over 252 W to 838 W	30 A frame 20 A

Magnetic contactor (MR-J5W2-G) (Note 4)

WG

Total output of rotary servo motors	Total continuous thrust of linear servo motors	Total output of direct drive motors	Magnetic contactor (Note 1, 6)	
			On/off of main circuit power supply	
			AC power supply	DC power supply
300 W or less	-	-	S-T10	SD-T11
Over 300 W to 600 W	150 N or less	100 W or less		
Over 600 W to 1 kW	Over 150 N to 300 N	Over 100 W to 252 W		
Over 1 kW to 2 kW	Over 300 N to 720 N	Over 252 W to 838 W	S-T21	SD-T21

Molded-case circuit breakers (MR-J5W3-G) (Note 4)

WG

Total output of rotary servo motors	Total continuous thrust of linear servo motors	Total output of direct drive motors	Molded-case circuit breaker (Note 3, 6, 7)
450 W or less	150 N or less	-	30 A frame 10 A
Over 450 W to 800 W	Over 150 N to 300 N	252 W or less	30 A frame 15 A
Over 800 W to 1.5 kW	Over 300 N to 450 N	Over 252 W to 378 W	30 A frame 20 A

Magnetic contactor (MR-J5W3-G) (Note 4)

WG

Total output of rotary servo motors	Total continuous thrust of linear servo motors	Total output of direct drive motors	Magnetic contactor (Note 1, 6)	
			On/off of main circuit power supply	
			AC power supply	DC power supply
450 W or less	150 N or less	-	S-T10	SD-T11
Over 450 W to 800 W	Over 150 N to 300 N	252 W or less		
Over 800 W to 1.5 kW	Over 300 N to 450 N	Over 252 W to 378 W	S-T21	SD-T21

Notes:
1. Use a magnetic contactor with an operation delay time of 80 ms or less. The operation delay time is the time interval from current being applied to the coil until closure of contacts.
2. The wire size shows applicable size for the servo amplifier connector.
3. When complying with IEC/EN/UL/CSA standard, refer to "MR-J5 User's Manual" or "MELSERVO-J5 Safety Instructions and Precautions for AC Servos" enclosed with the servo amplifier.
4. When two different types of servo motors (rotary servo motor, linear servo motor, or direct drive motor) are connected to the multi-axis servo amplifier, refer to "MR-J5 User's Manual" for selecting a molded-case circuit breaker and a magnetic contactor.
5. Keep the wire length to the regenerative option within 5 m.
6. Install one molded-case circuit breaker and one magnetic contactor for each servo amplifier.
7. Use a molded-case circuit breaker having the operation characteristics equal to or higher than Mitsubishi Electric general-purpose products.

Motor Circuit Breakers

G G-RJ WG A A-RJ

A motor circuit breaker is a device integrating the functions of a molded-case circuit breaker and a thermal overload relay.

Servo amplifier	Rated input voltage AC [V]	Input phase (Note 2)	Motor circuit breakers (Note 3)			SCCR [kA] (Note 1)
			Model	Rated voltage AC [V]	Rated current [A] (Heater design)	
MR-J5-10G/A	200 to 240	3-phase	MMP-T32	240	1.6	50
MR-J5-20G/A					2.5	
MR-J5-40G/A					4	
MR-J5-60G/A					6.3	
MR-J5-70G/A					6.3	
MR-J5-100G/A					8	
MR-J5-200G/A					18	
MR-J5-350G/A					25	25
MR-J5W2-22G					6.3	50
MR-J5W2-44G					8	
MR-J5W2-77G					13	
MR-J5W2-1010G					18	
MR-J5W3-222G					8	
MR-J5W3-444G					13	

Notes: 1. The value is applicable when the motor circuit breaker is combined with the servo amplifier.
2. 1-phase power input is not supported.
3. The combinations of the motor circuit breakers and the servo amplifiers comply with IEC/EN/UL/CSA.

Selection Example in HIV Wires for Servo Motors

G | G-RJ | WG | A | A-RJ

The following are examples of wire sizes when 600 V grade heat-resistant polyvinyl chloride insulated wires (HIV wires) with a length of 30 m are used. Refer to "Rotary Servo Motor User's Manual" when using cab-tire cables for supplying power (U, V, and W) to HK-ST series.

Rotary servo motor model		Wire size [mm²] (Note 6)	
		For power and grounding (U, V, W, ⏚) (general environment)	For electromagnetic brake (B1, B2)
HK-KT_W	HK-KT053W	0.75 (AWG 18) (Note 1, 2, 3)	0.2 (AWG 24) (Note 4, 7)
	HK-KT13W		
	HK-KT1M3W		
	HK-KT13UW		
	HK-KT23W		
	HK-KT43W		
	HK-KT63W		
	HK-KT23UW		
	HK-KT43UW		
	HK-KT7M3W		
	HK-KT103W		
	HK-KT7M3UW		
	HK-KT103UW		
	HK-KT153W		
	HK-KT203W		
	HK-KT202W		
HK-KT_4_W	HK-KT434W		
	HK-KT634W		
	HK-KT7M34W		
	HK-KT1034W		
	HK-KT1534W		
	HK-KT2034W		
	HK-KT2024W		
HK-ST_W	HK-ST52W	1.25 (AWG 16) (Note 5)	1.25 (AWG 16)
	HK-ST102W	1.25 (AWG 16) (Note 5)	
	HK-ST172W	2 (AWG 14)	
	HK-ST202AW	2 (AWG 14)	
	HK-ST302W	2 (AWG 14)	
	HK-ST202W	2 (AWG 14)	
	HK-ST352W	3.5 (AWG 12)	
HK-ST_4_W	HK-ST524W	1.25 (AWG 16) (Note 5)	
	HK-ST1024W	1.25 (AWG 16) (Note 5)	
	HK-ST1724W	1.25 (AWG 16) (Note 5)	
	HK-ST2024AW	1.25 (AWG 16) (Note 5)	
	HK-ST3024W	1.25 (AWG 16) (Note 5)	
	HK-ST2024W	1.25 (AWG 16) (Note 5)	
	HK-ST3524W	2 (AWG 14)	
	HK-ST5024W	3.5 (AWG 12)	

Notes:
1. Use fluorine resin wires of 0.75 mm² (AWG 18) for wiring to the servo motor power supply.
2. This size is applicable for wiring length of 10 m or shorter. For over 10 m, use MR-AEPB2J10CBL03M-_-L, MR-AEP2J10CBL03M-_-L, MR-AEPB2J20CBL03M-_-L, or MR-AEP2J20CBL03M-_-L, and extend it with HIV wires of 1.25 mm² (AWG 16).
3. When complying with UL/CSA standard, use MR-AEPB2J10CBL03M-_-L, MR-AEP2J10CBL03M-_-L, MR-AEPB2J20CBL03M-_-L, or MR-AEP2J20CBL03M-_-L, and extend it with HIV wires of 2 mm² (AWG 14).
4. Use fluorine resin wires of 0.2 mm² (AWG 24) for wiring to the electromagnetic brake.
5. When complying with UL/CSA standard, use 2 mm² (AWG 14). Refer to "Rotary Servo Motor User's Manual" for details.
6. The same wire size is applicable when the rated torque and the maximum torque are increased.
7. This size is applicable for wiring length of 10 m or shorter. For over 10 m, extend the wires with HIV wires of 1.25 mm² (AWG 16).

Selection Example in HIV Wires for Servo Motors

G G-RJ WG A A-RJ

The following are examples of wire sizes when 600 V grade heat-resistant polyvinyl chloride insulated wires (HIV wires) with a length of 30 m are used.

Linear servo motor model Primary side		Wire size [mm²]	
		For power and grounding (U, V, W, E) (general environment)	For thermistor (G1, G2)
LM-H3P2A-07P-BSS0		1.25 (AWG 16)	0.2 (AWG 24)
LM-H3P3A-12P-CSS0		1.25 (AWG 16)	
LM-H3P3B-24P-CSS0		1.25 (AWG 16)	
LM-H3P3C-36P-CSS0		1.25 (AWG 16)	
LM-H3P3D-48P-CSS0		2 (AWG 14)	
LM-H3P7A-24P-ASS0		1.25 (AWG 16)	
LM-H3P7B-48P-ASS0		2 (AWG 14)	
LM-H3P7C-72P-ASS0		2 (AWG 14)	
LM-H3P7D-96P-ASS0		3.5 (AWG 12)	
LM-FP2B-06M-1SS0	Natural cooling	2 (AWG 14)	
	Liquid cooling		
LM-K2P1A-01M-2SS1		1.25 (AWG 16)	
LM-K2P1C-03M-2SS1		2 (AWG 14)	
LM-K2P2A-02M-1SS1		1.25 (AWG 16)	
LM-K2P2C-07M-1SS1		3.5 (AWG 12)	
LM-K2P3C-14M-1SS1		3.5 (AWG 12)	
LM-U2PAB-05M-0SS0, LM-U2PAD-10M-0SS0, LM-U2PAF-15M-0SS0, LM-U2PBB-07M-1SS0, LM-U2PBD-15M-1SS0, LM-U2PBF-22M-1SS0		1.25 (AWG 16)	
LM-U2P2B-40M-2SS0		2 (AWG 14)	
LM-U2P2C-60M-2SS0		3.5 (AWG 12)	

Direct drive motor model	Wire size [mm²]
	For power and grounding (U, V, W, ⏚)
TM-RG2M002C30, TM-RG2M004E30, TM-RG2M009G30, TM-RU2M002C30, TM-RU2M004E30, TM-RU2M009G30	0.75 (AWG 18) (Note 1, 2)
TM-RFM002C20, TM-RFM004C20, TM-RFM006C20, TM-RFM006E20, TM-RFM012E20, TM-RFM018E20, TM-RFM012G20	1.25 (AWG 16) (Note 1)
TM-RFM048G20, TM-RFM072G20	3.5 (AWG 12)
TM-RFM040J10	1.25 (AWG 16) (Note 1)
TM-RFM120J10	3.5 (AWG 12)

Notes: 1. When complying with UL/CSA standard, use 2 mm² (AWG 14).
2. The same wire size is applicable when the rated torque and the maximum torque are increased.

MEMO

Product List

Servo system controllers

Item	Model	Application	
Motion module	RD78G4	Maximum number of control axes: 4 axes	CC-Link IE TSN master station
	RD78G8	Maximum number of control axes: 8 axes	CC-Link IE TSN master station
	RD78G16	Maximum number of control axes: 16 axes	CC-Link IE TSN master station
	RD78G32	Maximum number of control axes: 32 axes	CC-Link IE TSN master station
	RD78G64	Maximum number of control axes: 64 axes	CC-Link IE TSN master station

Engineering software

Item	Model	Application
MELSOFT iQ Works	SW2DND-IQWK-E	FA Engineering Software
MELSOFT GX Works3	SW1DND-GXW3-E	Programmable Controller Engineering Software (including motion control setting)

Servo amplifiers

Item		Model	Rated output	Main circuit power supply
Servo amplifier MR-J5-G	200 V class	MR-J5-10G	0.1 kW	3-phase or 1-phase 200 V AC to 240 V AC
		MR-J5-20G	0.2 kW	3-phase or 1-phase 200 V AC to 240 V AC
		MR-J5-40G	0.4 kW	3-phase or 1-phase 200 V AC to 240 V AC
		MR-J5-60G	0.6 kW	3-phase or 1-phase 200 V AC to 240 V AC
		MR-J5-70G	0.75 kW	3-phase or 1-phase 200 V AC to 240 V AC
		MR-J5-100G	1 kW	3-phase or 1-phase 200 V AC to 240 V AC
		MR-J5-200G	2 kW	3-phase or 1-phase 200 V AC to 240 V AC
		MR-J5-350G	3.5 kW	3-phase 200 V AC to 240 V AC
Servo amplifier MR-J5W2-G	200 V class	MR-J5W2-22G	0.2 kW x 2 axes	3-phase or 1-phase 200 V AC to 240 V AC
		MR-J5W2-44G	0.4 kW x 2 axes	3-phase or 1-phase 200 V AC to 240 V AC
		MR-J5W2-77G	0.7 kW x 2 axes	3-phase or 1-phase 200 V AC to 240 V AC
		MR-J5W2-1010G	1.0 kW x 2 axes	3-phase 200 V AC to 240 V AC
Servo amplifier MR-J5W3-G	200 V class	MR-J5W3-222G	0.2 kW x 3 axes	3-phase or 1-phase 200 V AC to 240 V AC
		MR-J5W3-444G	0.4 kW x 3 axes	3-phase or 1-phase 200 V AC to 240 V AC
Servo amplifier MR-J5-A	200 V class	MR-J5-10A	0.1 kW	3-phase or 1-phase 200 V AC to 240 V AC
		MR-J5-20A	0.2 kW	3-phase or 1-phase 200 V AC to 240 V AC
		MR-J5-40A	0.4 kW	3-phase or 1-phase 200 V AC to 240 V AC
		MR-J5-60A	0.6 kW	3-phase or 1-phase 200 V AC to 240 V AC
		MR-J5-70A	0.75 kW	3-phase or 1-phase 200 V AC to 240 V AC
		MR-J5-100A	1 kW	3-phase or 1-phase 200 V Ac to 240 V AC
		MR-J5-200A	2 kW	3-phase or 1-phase 200 V AC to 240 V AC
		MR-J5-350A	3.5 kW	3-phase 200 V AC to 240 V AC

Rotary servo motors

Item		Flange size	Model	Rated output	Rated speed
HK-KT series B: With an electromagnetic brake	HK-KT_W	40 x 40	HK-KT053W(B)	0.05 kW	3000 r/min
			HK-KT13W(B)	0.1 kW	3000 r/min
			HK-KT1M3W(B)	0.15 kW	3000 r/min
		60 x 60	HK-KT13UW(B)	0.1 kW	3000 r/min
			HK-KT23W(B)	0.2 kW	3000 r/min
			HK-KT43W(B)	0.4 kW	3000 r/min
			HK-KT63W(B)	0.6 kW	3000 r/min
		80 x 80	HK-KT23UW(B)	0.2 kW	3000 r/min
			HK-KT43UW(B)	0.4 kW	3000 r/min
			HK-KT7M3W(B)	0.75 kW	3000 r/min
			HK-KT103W(B)	1.0 kW	3000 r/min
		90 x 90	HK-KT7M3UW(B)	0.75 kW	3000 r/min
			HK-KT103UW(B)	1.0 kW	3000 r/min
			HK-KT153W(B)	1.5 kW	3000 r/min
			HK-KT203W(B)	2.0 kW	3000 r/min
			HK-KT202W(B)	2.0 kW	2000 r/min
	HK-KT_4_W	60 x 60	HK-KT434W(B)	0.4 kW (Note 1)	3000 r/min (Note 1)
			HK-KT634W(B)	0.6 kW (Note 1)	3000 r/min (Note 1)
		80 x 80	HK-KT7M34W(B)	0.75 kW (Note 1)	3000 r/min (Note 1)
			HK-KT1034W(B)	1.0 kW (Note 1)	3000 r/min (Note 1)
		90 x 90	HK-KT1534W(B)	1.5 kW (Note 1)	3000 r/min (Note 1)
			HK-KT2034W(B)	2.0 kW (Note 1)	3000 r/min (Note 1)
			HK-KT2024W(B)	2.0 kW (Note 1)	2000 r/min (Note 1)
HK-ST series B: With an electromagnetic brake	HK-ST_W	130 x 130	HK-ST52W(B)	0.5 kW	2000 r/min
			HK-ST102W(B)	1.0 kW	2000 r/min
			HK-ST172W(B)	1.75 kW	2000 r/min
			HK-ST202AW(B)	2.0 kW	2000 r/min
			HK-ST302W(B)	3.0 kW	2000 r/min
		176 x 176	HK-ST202W(B)	2.0 kW	2000 r/min
			HK-ST352W(B)	3.5 kW	2000 r/min
	HK-ST_4_W	130 x 130	HK-ST524W(B)	0.5 kW (Note 1)	2000 r/min (Note 1)
			HK-ST1024W(B)	1.0 kW (Note 1)	2000 r/min (Note 1)
			HK-ST1724W(B)	1.75 kW (Note 1)	2000 r/min (Note 1)
			HK-ST2024AW(B)	2.0 kW (Note 1)	2000 r/min (Note 1)
			HK-ST3024W(B)	3.0 kW (Note 1)	2000 r/min (Note 1)
		176 x 176	HK-ST2024W(B)	2.0 kW (Note 1)	2000 r/min (Note 1)
			HK-ST3524W(B)	3.5 kW (Note 1)	2000 r/min (Note 1)
			HK-ST5024W(B)	5.0 kW (Note 1)	2000 r/min (Note 1)

Notes:

1. The rated output is applicable when the rotary servo motor is used with a 400 V AC servo amplifier (future release planned). Refer to the list of specifications of each rotary servo motor for when a 200 V AC servo amplifier drives the rotary servo motor.

Linear servo motors

Item	Model	Continuous thrust	Maximum thrust	Maximum speed	Length
LM-H3 series primary side (coil)	LM-H3P2A-07P-BSS0	70 N	175 N	3.0 m/s	—
	LM-H3P3A-12P-CSS0	120 N	300 N	3.0 m/s	—
	LM-H3P3B-24P-CSS0	240 N	600 N	3.0 m/s	—
	LM-H3P3C-36P-CSS0	360 N	900 N	3.0 m/s	—
	LM-H3P3D-48P-CSS0	480 N	1200 N	3.0 m/s	—
	LM-H3P7A-24P-ASS0	240 N	600 N	3.0 m/s	—
	LM-H3P7B-48P-ASS0	480 N	1200 N	3.0 m/s	—
	LM-H3P7C-72P-ASS0	720 N	1800 N	3.0 m/s	—
	LM-H3P7D-96P-ASS0	960 N	2400 N	3.0 m/s	—
LM-H3 series secondary side (magnet)	LM-H3S20-288-BSS0	—	—	—	288 mm
	LM-H3S20-384-BSS0	—	—	—	384 mm
	LM-H3S20-480-BSS0	—	—	—	480 mm
	LM-H3S20-768-BSS0	—	—	—	768 mm
	LM-H3S30-288-CSS0	—	—	—	288 mm
	LM-H3S30-384-CSS0	—	—	—	384 mm
	LM-H3S30-480-CSS0	—	—	—	480 mm
	LM-H3S30-768-CSS0	—	—	—	768 mm
	LM-H3S70-288-ASS0	—	—	—	288 mm
	LM-H3S70-384-ASS0	—	—	—	384 mm
	LM-H3S70-480-ASS0	—	—	—	480 mm
	LM-H3S70-768-ASS0	—	—	—	768 mm
LM-F series primary side (coil)	LM-FP2B-06M-1SS0	300 N (natural cooling)/ 600 N (force cooling)	1800 N	2.0 m/s	—
LM-F series secondary side (magnet)	LM-FS20-480-1SS0	—	—	—	480 mm
	LM-FS20-576-1SS0	—	—	—	576 mm
LM-K2 series primary side (coil)	LM-K2P1A-01M-2SS1	120 N	300 N	2.0 m/s	—
	LM-K2P1C-03M-2SS1	360 N	900 N	2.0 m/s	—
	LM-K2P2A-02M-1SS1	240 N	600 N	2.0 m/s	—
	LM-K2P2C-07M-1SS1	720 N	1800 N	2.0 m/s	—
	LM-K2P3C-14M-1SS1	1440 N	3600 N	2.0 m/s	—
LM-K2 series secondary side (magnet)	LM-K2S10-288-2SS1	—	—	—	288 mm
	LM-K2S10-384-2SS1	—	—	—	384 mm
	LM-K2S10-480-2SS1	—	—	—	480 mm
	LM-K2S10-768-2SS1	—	—	—	768 mm
	LM-K2S20-288-1SS1	—	—	—	288 mm
	LM-K2S20-384-1SS1	—	—	—	384 mm
	LM-K2S20-480-1SS1	—	—	—	480 mm
	LM-K2S20-768-1SS1	—	—	—	768 mm
	LM-K2S30-288-1SS1	—	—	—	288 mm
	LM-K2S30-384-1SS1	—	—	—	384 mm
	LM-K2S30-480-1SS1	—	—	—	480 mm
	LM-K2S30-768-1SS1	—	—	—	768 mm
LM-U2 series primary side (coil)	LM-U2PAB-05M-0SS0	50 N	150 N	2.0 m/s	—
	LM-U2PAD-10M-0SS0	100 N	300 N	2.0 m/s	—
	LM-U2PAF-15M-0SS0	150 N	450 N	2.0 m/s	—
	LM-U2PBB-07M-1SS0	75 N	225 N	2.0 m/s	—
	LM-U2PBD-15M-1SS0	150 N	450 N	2.0 m/s	—
	LM-U2PBF-22M-1SS0	225 N	675 N	2.0 m/s	—
	LM-U2P2B-40M-2SS0	400 N	1600 N	2.0 m/s	—
	LM-U2P2C-60M-2SS0	600 N	2400 N	2.0 m/s	—
LM-U2 series secondary side (magnet)	LM-U2SA0-240-0SS0	—	—	—	240 mm
	LM-U2SA0-300-0SS0	—	—	—	300 mm
	LM-U2SA0-420-0SS0	—	—	—	420 mm
	LM-U2SB0-240-1SS1	—	—	—	240 mm
	LM-U2SB0-300-1SS1	—	—	—	300 mm
	LM-U2SB0-420-1SS1	—	—	—	420 mm
	LM-U2S20-300-2SS1	—	—	—	300 mm
	LM-U2S20-480-2SS1	—	—	—	480 mm

Product List

Direct drive motors

Item	Model	Rated torque	Maximum torque	Rated speed
TM-RG2M series	TM-RG2M002C30	2.2 N•m	8.8 N•m	300 r/min
	TM-RG2M004E30	4.5 N•m	13.5 N•m	300 r/min
	TM-RG2M009G30	9 N•m	27 N•m	300 r/min
TM-RU2M series	TM-RU2M002C30	2.2 N•m	8.8 N•m	300 r/min
	TM-RU2M004E30	4.5 N•m	13.5 N•m	300 r/min
	TM-RU2M009G30	9 N•m	27 N•m	300 r/min
TM-RFM series	TM-RFM002C20	2 N•m	6 N•m	200 r/min
	TM-RFM004C20	4 N•m	12 N•m	200 r/min
	TM-RFM006C20	6 N•m	18 N•m	200 r/min
	TM-RFM006E20	6 N•m	18 N•m	200 r/min
	TM-RFM012E20	12 N•m	36 N•m	200 r/min
	TM-RFM018E20	18 N•m	54 N•m	200 r/min
	TM-RFM012G20	12 N•m	36 N•m	200 r/min
	TM-RFM048G20	48 N•m	144 N•m	200 r/min
	TM-RFM072G20	72 N•m	216 N•m	200 r/min
	TM-RFM040J10	40 N•m	120 N•m	100 r/min
	TM-RFM120J10	120 N•m	360 N•m	100 r/min

Cables for rotary servo motors

Item	Model	Length	Bending life	IP rating	Application
Motor cable (dual cable type/ direct connection type for 10 m or shorter)	MR-AEPB2CBL2M-A1-H	2 m	Long bending life	IP65	For HK-KT Load-side lead With electromagnetic brake wires
	MR-AEPB2CBL5M-A1-H	5 m	Long bending life	IP65	
	MR-AEPB2CBL10M-A1-H	10 m	Long bending life	IP65	
	MR-AEPB2CBL2M-A1-L	2 m	Standard	IP65	
	MR-AEPB2CBL5M-A1-L	5 m	Standard	IP65	
	MR-AEPB2CBL10M-A1-L	10 m	Standard	IP65	
	MR-AEPB2CBL2M-A2-H	2 m	Long bending life	IP65	For HK-KT Opposite to load-side lead With electromagnetic brake wires
	MR-AEPB2CBL5M-A2-H	5 m	Long bending life	IP65	
	MR-AEPB2CBL10M-A2-H	10 m	Long bending life	IP65	
	MR-AEPB2CBL2M-A2-L	2 m	Standard	IP65	
	MR-AEPB2CBL5M-A2-L	5 m	Standard	IP65	
	MR-AEPB2CBL10M-A2-L	10 m	Standard	IP65	
	MR-AEP2CBL2M-A1-H	2 m	Long bending life	IP65	For HK-KT Load-side lead Without electromagnetic brake wires
	MR-AEP2CBL5M-A1-H	5 m	Long bending life	IP65	
	MR-AEP2CBL10M-A1-H	10 m	Long bending life	IP65	
	MR-AEP2CBL2M-A1-L	2 m	Standard	IP65	
	MR-AEP2CBL5M-A1-L	5 m	Standard	IP65	
	MR-AEP2CBL10M-A1-L	10 m	Standard	IP65	
	MR-AEP2CBL2M-A2-H	2 m	Long bending life	IP65	For HK-KT Opposite to load-side lead Without electromagnetic brake wires
	MR-AEP2CBL5M-A2-H	5 m	Long bending life	IP65	
	MR-AEP2CBL10M-A2-H	10 m	Long bending life	IP65	
	MR-AEP2CBL2M-A2-L	2 m	Standard	IP65	
	MR-AEP2CBL5M-A2-L	5 m	Standard	IP65	
	MR-AEP2CBL10M-A2-L	10 m	Standard	IP65	
Motor cable (Note 1) (dual cable type/ junction type for over 10 m)	MR-AEPB2J10CBL03M-A1-L	0.3 m	Standard	IP20	For HK-KT Load-side lead With electromagnetic brake wires
	MR-AEPB2J10CBL03M-A2-L	0.3 m	Standard	IP20	For HK-KT Opposite to load-side lead With electromagnetic brake wires
	MR-AEP2J10CBL03M-A1-L	0.3 m	Standard	IP20	For HK-KT Load-side lead Without electromagnetic brake wires
	MR-AEP2J10CBL03M-A2-L	0.3 m	Standard	IP20	For HK-KT Opposite to load-side lead Without electromagnetic brake wires
Encoder cable (Note 2)	MR-AEKCBL20M-H	20 m	Long bending life	IP20	For HK-KT
	MR-AEKCBL30M-H	30 m	Long bending life	IP20	
	MR-AEKCBL40M-H	40 m	Long bending life	IP20	
	MR-AEKCBL50M-H	50 m	Long bending life	IP20	
	MR-AEKCBL20M-L	20 m	Standard	IP20	
	MR-AEKCBL30M-L	30 m	Standard	IP20	
Motor cable (Note 3) (dual cable type/ junction type for over 10 m)	MR-AEPB2J20CBL03M-A1-L	0.3 m	Standard	IP65	For HK-KT Load-side lead With electromagnetic brake wires
	MR-AEPB2J20CBL03M-A2-L	0.3 m	Standard	IP65	For HK-KT Opposite to load-side lead With electromagnetic brake wires
	MR-AEP2J20CBL03M-A1-L	0.3 m	Standard	IP65	For HK-KT Load-side lead Without electromagnetic brake wires
	MR-AEP2J20CBL03M-A2-L	0.3 m	Standard	IP65	For HK-KT Opposite to load-side lead Without electromagnetic brake wires

Notes:

1. Use this cable in combination with MR-AEKCBL_M-H, MR-AEKCBL_M-L, or MR-ECNM.
2. Use this cable in combination with MR-AEPB2J10CBL03M-_-L or MR-AEP2J10CBL03M-_-L.
3. Use this cable in combination with MR-AENSCBL_M-H, MR-AENSCBL_M-L, or MR-J3SCNS.

Cables for rotary servo motors

Item	Model	Length	Bending life	IP rating	Application
Encoder cable	MR-J3ENSCBL2M-H	2 m	Long bending life	IP67	For HK-ST
	MR-J3ENSCBL5M-H	5 m	Long bending life	IP67	
	MR-J3ENSCBL10M-H	10 m	Long bending life	IP67	
	MR-AENSCBL20M-H (Note 1)	20 m	Long bending life	IP67	For HK-KT/HK-ST
	MR-AENSCBL30M-H (Note 1)	30 m	Long bending life	IP67	
	MR-AENSCBL40M-H (Note 1)	40 m	Long bending life	IP67	
	MR-AENSCBL50M-H (Note 1)	50 m	Long bending life	IP67	
	MR-J3ENSCBL2M-L	2 m	Standard	IP67	For HK-ST
	MR-J3ENSCBL5M-L	5 m	Standard	IP67	
	MR-J3ENSCBL10M-L	10 m	Standard	IP67	
	MR-AENSCBL20M-L (Note 1)	20 m	Standard	IP67	For HK-KT/HK-ST
	MR-AENSCBL30M-L (Note 1)	30 m	Standard	IP67	
Motor cable (single cable type/ direct connection type for 10 m or shorter)	MR-AEPB1CBL2M-A1-H	2 m	Long bending life	IP65	For HK-KT Load-side lead With electromagnetic brake wires
	MR-AEPB1CBL5M-A1-H	5 m	Long bending life	IP65	
	MR-AEPB1CBL10M-A1-H	10 m	Long bending life	IP65	
	MR-AEPB1CBL2M-A1-L	2 m	Standard	IP65	
	MR-AEPB1CBL5M-A1-L	5 m	Standard	IP65	
	MR-AEPB1CBL10M-A1-L	10 m	Standard	IP65	
	MR-AEPB1CBL2M-A2-H	2 m	Long bending life	IP65	For HK-KT Opposite to load-side lead With electromagnetic brake wires
	MR-AEPB1CBL5M-A2-H	5 m	Long bending life	IP65	
	MR-AEPB1CBL10M-A2-H	10 m	Long bending life	IP65	
	MR-AEPB1CBL2M-A2-L	2 m	Standard	IP65	
	MR-AEPB1CBL5M-A2-L	5 m	Standard	IP65	
	MR-AEPB1CBL10M-A2-L	10 m	Standard	IP65	
	MR-AEP1CBL2M-A1-H	2 m	Long bending life	IP65	For HK-KT Load-side lead Without electromagnetic brake wires
	MR-AEP1CBL5M-A1-H	5 m	Long bending life	IP65	
	MR-AEP1CBL10M-A1-H	10 m	Long bending life	IP65	
	MR-AEP1CBL2M-A1-L	2 m	Standard	IP65	
	MR-AEP1CBL5M-A1-L	5 m	Standard	IP65	
	MR-AEP1CBL10M-A1-L	10 m	Standard	IP65	
	MR-AEP1CBL2M-A2-H	2 m	Long bending life	IP65	For HK-KT Opposite to load-side lead Without electromagnetic brake wires
	MR-AEP1CBL5M-A2-H	5 m	Long bending life	IP65	
	MR-AEP1CBL10M-A2-H	10 m	Long bending life	IP65	
	MR-AEP1CBL2M-A2-L	2 m	Standard	IP65	
	MR-AEP1CBL5M-A2-L	5 m	Standard	IP65	
	MR-AEP1CBL10M-A2-L	10 m	Standard	IP65	

Notes:

1. When using this cable or connector set for HK-KT series, use it in combination with MR-AEPB2J20CBL03M-_-L or MR-AEP2J20CBL03M-_-L.

Connector sets for rotary servo motors

Item	Model	Description	IP rating	Application
Encoder connector set	MR-ECNM (Note 1)	Junction connector × 1, servo amplifier connector × 1	IP20	For HK-KT
	MR-J3SCNS (Note 2)	Junction connector or encoder connector × 1, servo amplifier connector × 1	IP67	For HK-KT/HK-ST (one-touch connection type)
	MR-ENCNS2	Encoder connector × 1, servo amplifier connector × 1	IP67	For HK-ST (straight type) (screw type)
	MR-J3SCNSA	Encoder connector × 1, servo amplifier connector × 1	IP67	For HK-ST (angle type) (one-touch connection type)
	MR-ENCNS2A	Encoder connector × 1, servo amplifier connector × 1	IP67	For HK-ST (angle type) (screw type)
Power connector set	MR-APWCNS4	Power connector × 1	IP67	For HK-ST52(4)W, 102(4)W, 172(4)W, 202(4)AW, and 302(4)W (one-touch connection type)
	MR-APWCNS5	Power connector × 1	IP67	For HK-ST202(4)W, 352(4)W, and 5024W (one-touch connection type)
Electromagnetic brake connector set	MR-BKCNS1	Electromagnetic brake connector × 1	IP67	For HK-ST (straight type) (one-touch connection type)
	MR-BKCNS2	Electromagnetic brake connector × 1	IP67	For HK-ST (straight type) (screw type)
	MR-BKCNS1A	Electromagnetic brake connector × 1	IP67	For HK-ST (angle type) (one-touch connection type)
	MR-BKCNS2A	Electromagnetic brake connector × 1	IP67	For HK-ST (angle type) (screw type)

Notes:

1. Use this cable in combination with MR-AEPB2J10CBL03M-_-L or MR-AEP2J10CBL03M-_-L.
2. When using this cable or connector set for HK-KT series, use it in combination with MR-AEPB2J20CBL03M-_-L or MR-AEP2J20CBL03M-_-L.

Cables and connector sets for linear servo motors

Item	Model	Description		IP rating	Application
Encoder cable	MR-EKCBL2M-H	2 m	Long bending life	IP20	For connecting a linear encoder
	MR-EKCBL5M-H	5 m	Long bending life	IP20	
Junction cable for linear servo motors	MR-J4THCBL03M	0.3 m	—	—	For branching a thermistor
Encoder connector set	MR-ECNM	Junction connector × 1, servo amplifier connector × 1		IP20	For connecting a linear encoder
	MR-J3CN2	Servo amplifier connector × 1		—	For connecting a linear encoder or a thermistor
Connector set	MR-J3THMCN2	Junction connector × 2, servo amplifier connector × 1		—	For branching a thermistor

Connector sets for direct drive motors

Item	Model	Description	IP rating	Application
Encoder connector set	MR-J3DDCNS	Encoder connector or absolute position storage unit connector × 1, servo amplifier connector × 1	IP67	For TM-RG2M/TM-RU2M/TM-RFM (For connecting a direct drive motor and a servo amplifier, or an absolute position storage unit and a servo amplifier)
	MR-J3DDSPS	Encoder connector × 1, absolute position storage unit connector × 1	IP67	For TM-RG2M/TM-RU2M/TM-RFM (For connecting a direct drive motor and an absolute position storage unit)
Power connector set	MR-PWCNF	Power connector × 1	IP67	For TM-RG2M_, TM-RU2M_, TM-RFM_C20, and TM-RFM_E20
	MR-PWCNS4	Power connector × 1	IP67	For TM-RFM_G20
	MR-PWCNS5	Power connector × 1	IP67	For TM-RFM040J10 and TM-RFM120J10

Product List

Connectors for servo amplifiers

Item	Model	Description	IP rating	Application
Connector set	MR-CCN1	Servo amplifier connector × 1	—	For MR-J5-_G
	MR-J2CMP2	Servo amplifier connector × 1	—	For MR-J5W2-_G/ MR-J5W3-_G
	MR-ECN1	Servo amplifier connector × 20	—	
	MR-J3CN1	Servo amplifier connector × 1	—	For MR-J5-_A

Junction terminal blocks/Junction terminal block cables

Item	Model	Length	Application
Junction terminal block (26 pins)	MR-TB26A	—	For MR-J5W2-_G/ MR-J5W3-_G
Junction terminal block (50 pins)	MR-TB50	—	For MR-J5-_A
Junction terminal block cable	MR-J2HBUS05M	0.5 m	For connecting MR-J5-_G and PS7DW-20V14B-F
	MR-J2HBUS1M	1 m	
	MR-J2HBUS5M	5 m	
	MR-TBNATBL05M	0.5 m	For connecting MR-J5W2-_G/ MR-J5W3-_G, and MR-TB26A
	MR-TBNATBL1M	1 m	
	MR-J2M-CN1TBL05M	0.5 m	For connecting MR-J5-_A and MR-TB50
	MR-J2M-CN1TBL1M	1 m	

Batteries/Battery cases/Battery cables

Item	Model	Length	Application
Battery	MR-BAT6V1SET	—	For MR-J5-_G/ MR-J5-_A
	MR-BAT6V1SET-A	—	
	MR-BAT6V1	—	For MR-BAT6V1SET, MR-BAT6V1SET-A, and MR-BT6VCASE
Battery case	MR-BT6VCASE	—	For MR-J5-_G/ MR-J5W2-_G/ MR-J5W3-_G/ MR-J5-_A
Battery cable	MR-BT6V1CBL03M	0.3 m	For connecting MR-J5-_G/ MR-J5W2-_G/ MR-J5W3-_G/ MR-J5-_A, and MR-BT6VCASE
	MR-BT6V1CBL1M	1 m	
Junction battery cable	MR-BT6V2CBL03M	0.3 m	For MR-J5-_G/ MR-J5W2-_G/ MR-J5W3-_G/ MR-J5-_A
	MR-BT6V2CBL1M	1 m	

Regenerative options

Item	Model	Permissible regenerative power	Resistance value	Application
Regenerative option	MR-RB032	30 W	40 Ω	For MR-J5-10G to 60G and MR-J5-10A to 60A
	MR-RB12	100 W	40 Ω	For MR-J5-20G to 60G and MR-J5-20A to 60A
	MR-RB14	100 W	26 Ω	For MR-J5-70G, 100G, MR-J5-70A, 100A, MR-J5W2-22G, 44G, and MR-J5W3-222G, 444G
	MR-RB30	300 W	13 Ω	For MR-J5-200G and MR-J5-200A
	MR-RB3N	300 W	9 Ω	For MR-J5-350G, MR-J5-350A, and MR-J5W2-77G, 1010G
	MR-RB34	300 W	26 Ω	For MR-J5-70G, 100G, MR-J5-70A, 100A, and MR-J5W3-222G, 444G
	MR-RB50	500 W	13 Ω	For MR-J5-200G and MR-J5-200A
	MR-RB5N	500 W	9 Ω	For MR-J5-350G and MR-J5-350A

Peripheral units

Item	Model	Application
Simple converter	MR-CM3K	For MR-J5-10G/A to MR-J5-200G/A, MR-J5W2-22G to MR-J5W2-1010G, MR-J5W3-222G, and MR-J5W3-444G
Absolute position storage unit	MR-BTAS01	For MR-J5-_G/ MR-J5W2-_G/ MR-J5W3-_G/ MR-J5-_A
Replacement fan unit	MR-J5-FAN1	For MR-J5-70G/A and MR-J5-100G/A
	MR-J5-FAN2	For MR-J5-200G/A and MR-J5-350G/A
	MR-J5W-FAN1	For MR-J5W2-44G
	MR-J5W-FAN3	For MR-J5W2-77G and MR-J5W2-1010G
	MR-J5W-FAN2	For MR-J5W3-222G and MR-J5W3-444G

Peripheral cables/Connector sets

Item	Model	Length	Application
Personal computer communication cable (USB cable)	MR-J3USBCBL3M	3 m	For MR-J5-_G/ MR-J5W2-_G/ MR-J5W3-_G/ MR-J5-_A
Monitor cable	MR-ACN6CBL1M	1 m	For MR-J5-_G/ MR-J5-_A
	MR-J3CN6CBL1M	1 m	For MR-J5W2-_G/ MR-J5W3-_G
STO cable	MR-D05UDL3M-B	3 m	For connecting a safety control device with MR-J5-_G/ MR-J5-_A

Servo support software

Item	Model	Application
MELSOFT MR Configurator2 (Note1)	SW1DNC-MRC2-E	Servo setup software for AC servo

Notes:

1. MR Configurator2 is included in GX Works3, EM78 SDK (available soon), and MT Works2 with software version 1.34L or later.
   If you have MELSOFT iQ Works, GX Works3, GX Works2, MT Works2, EM Software Development Kit, or CW Configurator, MR Configurator2 is available for free download.

For your safety

- To use the products given in this catalog properly, be sure to read the User's Manuals and the appended document prior to use.

Precautions for model selection

- Select a rotary servo motor or a direct drive motor which has the rated torque equal to or higher than the continuous effective torque.
- Select a linear servo motor which has the continuous thrust equal to or higher than the continuous effective load thrust.
- When the linear servo motor is used for vertical axis, it is necessary to have anti-drop mechanism such as spring and counter balance in the machine side.
- When unbalanced torque is generated, such as in a vertical lift machine, keep the unbalanced torque of the machine under 70 % of the servo motor rated torque.
- Create operation patterns by considering the settling time (ts) to complete positioning.

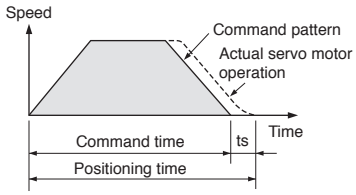

- Load to motor inertia ratio or load to mass ratio must be below the recommended ratio. If the ratio is too large, the expected performance may not be achieved, and the dynamic brake may be damaged.

General safety precautions

1. Transportation/installation

- Combinations of the servo motor and the servo amplifier are predetermined. Confirm the models of the servo motor and the servo amplifier to be used before installation.
- Do not drop or apply strong impact on the servo amplifier and the servo motor as they are precision devices. They may be damaged from such stress or shock.
- When fumigants that contain halogen materials such as fluorine, chlorine, bromine, and iodine are used for disinfecting and protecting wooden packaging from insects, they cause malfunction when entering our products. Please take necessary precautions to ensure that remaining materials from fumigant do not enter our products, or treat packaging with methods other than fumigation (heat method). Additionally, disinfect and protect wood from insects before packing products.
- Do not get on or place heavy objects on the servo amplifier or the servo motor.
- The system must withstand high speeds and high acceleration/deceleration.
- To enable high-accuracy positioning, ensure the machine rigidity, and keep the machine resonance point at a high level.
- Mount the servo amplifier and the servo motor on nonflammable material. Mounting them directly on or near flammable material may result in fires.
- The regenerative option becomes hot (the temperature rise of 100 °C or higher) with frequent use. Do not install within flammable objects or objects subject to thermal deformation. Make sure that wires do not come into contact with the unit.
- Securely fix the servo motor onto the machine.
- Install electrical and mechanical stoppers at the stroke end.
- Mount the servo amplifier vertically on a wall.
- Do not block intake and exhaust areas of the servo amplifier. Doing so may cause the servo amplifier to malfunction.
- When installing multiple servo amplifiers in a row in a sealed cabinet, leave space around the servo amplifiers as described in User's Manuals. To ensure the life and reliability of the servo amplifiers, prevent heat accumulation by keeping space as open as possible toward the top plate.

2. Environment

- Use the servo amplifier and the servo motor in the designated environment.
- Avoid installing the servo amplifier and the servo motor in areas with oil mist or dust. When installing in such areas, be sure to enclose the servo amplifier in a sealed cabinet, and protect the servo motor by furnishing a cover or by taking similar measures.
- Do not use in areas where the servo motor may be constantly subject to cutting fluid or lubricant oil, or where dew could condense because of oil mist, overcooling or excessive humidity. Doing so may deteriorate the insulation of the servo motor.

3. Grounding

- Securely ground to prevent electric shocks and to stabilize the potential in the control circuit.
- Connect the grounding wire to the cabinet protective earth (PE) terminal via the servo amplifier protective earth (PE) terminal for the servo motor grounding.
- Faults such as a position mismatch may occur if the grounding is insufficient.

4. Wiring

- Do not supply power to the output terminals (U, V, and W) of the servo amplifier or the input terminals (U, V, and W) of the servo motor. Doing so damages the servo amplifier and the servo motor.
- Connect the servo motor to the output terminals (U, V, and W) of the servo amplifier.
- Match the phase of the input terminals (U, V, and W) of the servo motor to the output terminals (U, V, and W) of the servo amplifier when connecting them. If they do not match, the servo motor does not operate properly.
- Check the wiring and sequence program thoroughly before switching the power on.
- Carefully select the cable clamping method, and make sure that bending stress and the stress of the cable's own weight are not applied on the cable connection section.
- In an application where the servo motor moves, determine the cable bending radius based on the cable bending life and wire type.

5. Initial settings

- For MR-J5-A(-RJ), select a control mode from position, speed or torque with [Pr. PA01.0]. Position control mode is set as default. Change the parameter setting value when using the other control modes. For MR-J5-G(-RJ) and MR-J5W_-G, the control mode is set by the controller.
- When using the regenerative option, change [Pr. PA02.0-1]. The regenerative option is disabled as default.

6. Operation

- Do not use a product which is damaged or has missing parts. In that case, replace the product.
- Turn on FLS and RLS (Upper/Lower stroke limit), or LSP and LSN (Forward/Reverse rotation stroke end) in position or speed control mode. The servo motor will not start if the signals are off.
- When a magnetic contactor is installed on the primary side of the servo amplifier, do not perform frequent starts and stops with the magnetic contactor. Doing so may damage the servo amplifier.

- When an error occurs, the servo amplifier stops outputting the power with activation of the protective function, and the servo motor stops immediately with the dynamic brake.
- The dynamic brake is a function for emergency stop. Do not use it to stop the servo motor in normal operations.
- As a rough guide, the dynamic brake withstands 1000 times of use when a machine which has load to motor inertia ratio equals to or lower than the recommended ratio stops from the rated speed every 10 minutes.
- When an error occurs, ensure safety by turning the power off, etc., before dealing with the error. Otherwise, it may cause an accident.
- If the protective functions of the servo amplifier activate, turn the power off immediately. Remove the cause before turning the power on again.
- The servo amplifier, the regenerative resistor, and the servo motor can be very hot during or after operation. Take safety measures such as covering them to prevent your hand and/or parts including cables from coming in contact with them.
- Do not touch the servo amplifier, the regenerative resistor, or the servo motor while the power is on or for a while after the power is turned off. Otherwise, an electric shock may occur. Make sure that the charge light is off, and check the voltage between P+ and N- with a voltage tester before wiring or inspection.
- In a maintenance inspection, make sure that the emergency stop circuit operates properly such that an operation can be stopped immediately and a power can be shut off by the emergency stop switch.

7. Others

- Do not touch the servo amplifier or the servo motor with wet hands.
- Do not modify the servo amplifier or the servo motor.

Precautions for Ethernet cables

- Do not apply excessive tension on the Ethernet cable when cabling.
- Refer to relevant Ethernet cable manual to keep the bending radius within the range of specifications.
- Avoid laying the Ethernet cables and the power cables side by side or do not bundle them together. Separate the Ethernet cables from the power cables.

Precautions for rotary servo motors and direct drive motors

- Do not hammer the shaft of the rotary servo motor and the rotor of the direct drive motor when installing a pulley or a coupling. Doing so may damage the encoder. When installing the pulley or the coupling to the key shaft servo motor, use the screw hole on the shaft end. Use a pulley extractor when removing the pulley.
- Do not apply a load exceeding the tolerable load onto the rotary servo motor shaft or the direct drive motor rotor. The shaft or the rotor may break.
- When the rotary servo motor is mounted with the shaft vertical (shaft up), take measures on the machine side so that oil from the gear box does not get into the servo motor.
- Mount the geared servo motor in a direction described in "Rotary Servo Motor User's Manual".
- When the direct drive motor is used in a machine such as vertical axis which generates unbalanced torque, be sure to use it in absolute position detection system.
- Do not use the 24 V DC interface power supply for the electromagnetic brake. Provide a dedicated power supply to the electromagnetic brake.
- Do not apply the electromagnetic brake when the servo is on. Doing so may cause the servo amplifier overload or shorten the brake life. Apply the electromagnetic brake when the servo is off.
- Torque may drop due to temperature increase of the rotary servo motor or the direct drive motor. Be sure to use the motor within the specified ambient temperature.

Precautions for linear encoders

- If the linear encoder is improperly mounted, an alarm or a positioning deviation may occur. Refer to the following general inspections of linear encoder to verify the mounting state. Contact the relevant linear encoder manufacturers for more details.
- General inspections of linear encoder
  - (a) Verify that the gap between the linear encoder head and the linear encoder is appropriate.
  - (b) Check for any rolling or yawing (looseness) on the linear encoder head.
  - (c) Check for contaminations and scratches on the linear encoder head and scale surface.
  - (d) Verify that vibration and temperature are within the specified range.
  - (e) Verify that the speed is within the tolerable range even when overshooting.

Precautions for linear servo motors

- The linear servo system uses powerful magnets on the secondary side. Magnetic force is inversely proportional to the square of the distance from the magnetic material. Therefore, the magnetic force will be significantly stronger as closer to the magnetic material. Persons installing the linear servo motor as well as operating the machine must be fully cautious. Persons with pacemakers or other medical devices must keep away from the machine.
- Keep cell phones, watches, calculators and other products which may malfunction or fail due to the magnetic force away from the machine. Avoid wearing metals including earrings and necklaces when handling the machine.
- Place a caution sign such as "CAUTION! POWERFUL MAGNET" to give warning against the machine.
- Use non-magnetic tools, when installing or working near the linear servo motor.
  e.g., explosion-proof beryllium copper alloy safety tools
  (BEALON manufactured by NGK Insulators, Ltd.)
- The permanent magnets on the secondary side generate attraction force, and there is a risk that your hand may be caught. Handle the linear servo motor carefully to avoid serious injury especially when installing the primary side after installing the secondary side.
- If the linear servo motor is used in such an environment where there is magnetic powder, the powder may adhere to the permanent magnets of the secondary side and cause a damage. In that case, take measures to prevent the magnetic powder or pieces from being attracted to the permanent magnets of the secondary side or from going into the gap between primary side and secondary side.
- The linear servo motor is rated IP00. Provide protection measures to prevent dust and oil, etc., as necessary.
- Install the moving part in such manner that the center of gravity of the moving part comes directly above the center of the primary side.
- Lead wires or cables led from the primary side do not have a long bending life. Fix the lead wires or cables to a moving part to prevent the lead wires or cables from repetitive bending.
- Increase in the temperature of the linear servo motor causes a thrust drop. Be sure to use the motor within the specified ambient temperature.

Disposal of linear servo motors

- Dispose the primary side as industrial waste.
- Demagnetize the secondary side with a heat of 300 °C or higher, and dispose as industrial waste. Please contact your local sales office if you have any questions about disposal.
- Do not leave the product unattended.

For safety standard certification

Even though the MR-J5 series servo amplifiers are certified to various safety standards, this does not guarantee that the systems in which they are installed will also be certified. The entire system shall observe the following:

(1) For safety circuits, use parts and/or devices whose safety are confirmed or which satisfy safety standards.
(2) For details regarding the use of the servo amplifiers and other cautionary information, refer to relevant User's Manuals.
(3) Perform risk assessment on the entire machine/system. It is recommended to use a Certification Body for final safety certification.

Servo system controller

Warranty

1. Warranty period and coverage

We will repair any failure or defect (hereinafter referred to as "failure") in our FA equipment (hereinafter referred to as the "Product") arisen during warranty period at no charge due to causes for which we are responsible through the distributor from which you purchased the Product or our service provider. However, we will charge the actual cost of dispatching our engineer for an on-site repair work on request by customer in Japan or overseas countries. We are not responsible for any on-site readjustment and/or trial run that may be required after a defective unit is repaired or replaced.

[Term]

For terms of warranty, please contact your local FA center.

[Limitations]

(1) You are requested to conduct an initial failure diagnosis by yourself, as a general rule.
It can also be carried out by us or our service company upon your request and the actual cost will be charged.
However, it will not be charged if we are responsible for the cause of the failure.

(2) This limited warranty applies only when the condition, method, environment, etc. of use are in compliance with the terms and conditions and instructions that are set forth in the instruction manual and user manual for the Product and the caution label affixed to the Product.

(3) Even during the term of warranty, the repair cost will be charged on you in the following cases;
- (i) a failure caused by your improper storing or handling, carelessness or negligence, etc., and a failure caused by your hardware or software problem
- (ii) a failure caused by any alteration, etc. to the Product made on your side without our approval
- (iii) a failure which may be regarded as avoidable, if your equipment in which the Product is incorporated is equipped with a safety device required by applicable laws and has any function or structure considered to be indispensable according to a common sense in the industry
- (iv) a failure which may be regarded as avoidable if consumable parts designated in the instruction manual, etc. are duly maintained and replaced
- (v) any replacement of consumable parts (battery, fan, smoothing capacitor, etc.)
- (vi) a failure caused by external factors such as inevitable accidents, including without limitation fire and abnormal fluctuation of voltage, and acts of God, including without limitation earthquake, lightning and natural disasters
- (vii) a failure generated by an unforeseeable cause with a scientific technology that was not available at the time of the shipment of the Product from our company
- (viii) any other failures which we are not responsible for or which you acknowledge we are not responsible for

2. Term of warranty after the stop of production

(1) We may accept the repair at charge for another seven (7) years after the production of the product is discontinued. The announcement of the stop of production for each model can be seen in our Sales and Service, etc.

(2) Please note that the Product (including its spare parts) cannot be ordered after its stop of production.

3. Service in overseas countries

Our regional FA Center in overseas countries will accept the repair work of the Product. However, the terms and conditions of the repair work may differ depending on each FA Center. Please ask your local FA Center for details.

4. Exclusion of loss in opportunity and secondary loss from warranty liability

Regardless of the gratis warranty term, Mitsubishi shall not be liable for compensation to:

(1) Damages caused by any cause found not to be the responsibility of Mitsubishi.

(2) Loss in opportunity, lost profits incurred to the user by Failures of Mitsubishi products.

(3) Special damages and secondary damages whether foreseeable or not, compensation for accidents, and compensation for damages to products other than Mitsubishi products.

(4) Replacement by the user, maintenance of on-site equipment, start-up test run and other tasks.

5. Change of Product specifications

Specifications listed in our catalogs, manuals or technical documents may be changed without notice.

6. Application and use of the Product

(1) For the use of our Motion module, its applications should be those that may not result in a serious damage even if any failure or malfunction occurs in Motion module, and a backup or fail-safe function should operate on an external system to Motion controller/Simple Motion module when any failure or malfunction occurs.

(2) Our Motion module is designed and manufactured as general purpose product for use at general industries.
Therefore, applications substantially influential on the public interest for such as atomic power plants and other power plants of electric power companies, and also which require a special quality assurance system, including applications for railway companies and government or public offices are not recommended, and we assume no responsibility for any failure caused by these applications when used.
In addition, applications which may be substantially influential to human lives or properties for such as airlines, medical treatments, railway service, incineration and fuel systems, man-operated material handling equipment, entertainment machines, safety machines, etc. are not recommended, and we assume no responsibility for any failure caused by these applications when used.
We will review the acceptability of the abovementioned applications, if you agree not to require a specific quality for a specific application. Please contact us for consultation.

AC servo

Warranty

1. Warranty period and coverage

We will repair any failure or defect hereinafter referred to as "failure" in our FA equipment hereinafter referred to as the "Product" arisen during warranty period at no charge due to causes for which we are responsible through the distributor from which you purchased the Product or our service provider. However, we will charge the actual cost of dispatching our engineer for an on-site repair work on request by customer in Japan or overseas countries. We are not responsible for any on-site readjustment and/or trial run that may be required after a defective unit is repaired or replaced.

[Term]

For terms of warranty, please contact your local FA center.

[Limitations]

(1) You are requested to conduct an initial failure diagnosis by yourself, as a general rule. It can also be carried out by us or our service company upon your request and the actual cost will be charged. However, it will not be charged if we are responsible for the cause of the failure.

(2) This limited warranty applies only when the condition, method, environment, etc. of use are in compliance with the terms and conditions and instructions that are set forth in the instruction manual and user manual for the Product and the caution label affixed to the Product.

(3) Even during the term of warranty, the repair cost will be charged on you in the following cases;

(i) a failure caused by your improper storing or handling, carelessness or negligence, etc., and a failure caused by your hardware or software problem

(ii) a failure caused by any alteration, etc. to the Product made on your side without our approval

(iii) a failure which may be regarded as avoidable, if your equipment in which the Product is incorporated is equipped with a safety device required by applicable laws and has any function or structure considered to be indispensable according to a common sense in the industry

(iv) a failure which may be regarded as avoidable if consumable parts designated in the instruction manual, etc. are duly maintained and replaced

(v) any replacement of consumable parts (battery, fan, smoothing capacitor, etc.)

(vi) a failure caused by external factors such as inevitable accidents, including without limitation fire and abnormal fluctuation of voltage, and acts of God, including without limitation earthquake, lightning and natural disasters

(vii) a failure generated by an unforeseeable cause with a scientific technology that was not available at the time of the shipment of the Product from our company

(viii) any other failures which we are not responsible for or which you acknowledge we are not responsible for

2. Term of warranty after the stop of production

(1) We may accept the repair at charge for another seven (7) years after the production of the product is discontinued. The announcement of the stop of production for each model can be seen in our Sales and Service, etc.

(2) Please note that the Product (including its spare parts) cannot be ordered after its stop of production.

3. Service in overseas countries

Our regional FA Center in overseas countries will accept the repair work of the Product. However, the terms and conditions of the repair work may differ depending on each FA Center. Please ask your local FA Center for details.

4. Exclusion of loss in opportunity and secondary loss from warranty liability

Regardless of the gratis warranty term, Mitsubishi shall not be liable for compensation to:

(1) Damages caused by any cause found not to be the responsibility of Mitsubishi.

(2) Loss in opportunity, lost profits incurred to the user by Failures of Mitsubishi products.

(3) Special damages and secondary damages whether foreseeable or not, compensation for accidents, and compensation for damages to products other than Mitsubishi products.

(4) Replacement by the user, maintenance of on-site equipment, start-up test run and other tasks.

5. Change of Product specifications

Specifications listed in our catalogs, manuals or technical documents may be changed without notice.

6. Application and use of the Product

(1) For the use of our AC Servo, its applications should be those that may not result in a serious damage even if any failure or malfunction occurs in AC Servo, and a backup or fail-safe function should operate on an external system to AC Servo when any failure or malfunction occurs.

(2) Our AC Servo is designed and manufactured as a general purpose product for use at general industries. Therefore, applications substantially influential on the public interest for such as atomic power plants and other power plants of electric power companies, and also which require a special quality assurance system, including applications for railway companies and government or public offices are not recommended, and we assume no responsibility for any failure caused by these applications when used.

In addition, applications which may be substantially influential to human lives or properties for such as airlines, medical treatments, railway service, incineration and fuel systems, man-operated material handling equipment, entertainment machines, safety machines, etc. are not recommended, and we assume no responsibility for any failure caused by these applications when used.

We will review the acceptability of the abovementioned applications, if you agree not to require a specific quality for a specific application. Please contact us for consultation.

Extensive global support coverage providing expert help whenever needed

■ Global FA centers

EMEA

Europe FA Center
MITSUBISHI ELECTRIC EUROPE B.V. Polish Branch
Tel: +48-12-347-65-00

Germany FA Center
MITSUBISHI ELECTRIC EUROPE B.V. German Branch
Tel: +49-2102-486-0

UK FA Center
MITSUBISHI ELECTRIC EUROPE B.V. UK Branch
Tel: +44-1707-27-8780

Czech Republic FA Center
MITSUBISHI ELECTRIC EUROPE B.V. Czech Branch
Tel: +420-255 719 200

Italy FA Center
MITSUBISHI ELECTRIC EUROPE B.V. Italian Branch
Tel: +39-039-60531

Russia FA Center
MITSUBISHI ELECTRIC (RUSSIA) LLC
St. Petersburg Branch
Tel: +7-812-633-3497

Turkey FA Center
MITSUBISHI ELECTRIC TURKEY A.S. Umraniye Branch
Tel: +90-216-526-3990

Asia-Pacific

China

Beijing FA Center
MITSUBISHI ELECTRIC AUTOMATION (CHINA) LTD.
Beijing FA Center
Tel: +86-10-6518-8830

Guangzhou FA Center
MITSUBISHI ELECTRIC AUTOMATION (CHINA) LTD.
Guangzhou FA Center
Tel: +86-20-8923-6730

Shanghai FA Center
MITSUBISHI ELECTRIC AUTOMATION (CHINA) LTD.
Shanghai FA Center
Tel: +86-21-2322-3030

Tianjin FA Center
MITSUBISHI ELECTRIC AUTOMATION (CHINA) LTD.
Tianjin FA Center
Tel: +86-22-2813-1015

Taiwan

Taipei FA Center
SETSUYO ENTERPRISE CO., LTD.
Tel: +886-2-2299-9917

Korea

Korea FA Center
MITSUBISHI ELECTRIC AUTOMATION KOREA CO., LTD.
Tel: +82-2-3660-9630

Thailand

Thailand FA Center
MITSUBISHI ELECTRIC FACTORY AUTOMATION (THAILAND) CO., LTD.
Tel: +66-2682-6522~31

ASEAN

ASEAN FA Center
MITSUBISHI ELECTRIC ASIA PTE. LTD.
Tel: +65-6470-2475

Indonesia

Indonesia FA Center
PT. MITSUBISHI ELECTRIC INDONESIA
Cikarang Office
Tel: +62-21-2961-7797

Vietnam

Hanoi FA Center
MITSUBISHI ELECTRIC VIETNAM COMPANY LIMITED
Hanoi Branch Office
Tel: +84-4-3937-8075

Ho Chi Minh FA Center
MITSUBISHI ELECTRIC VIETNAM COMPANY LIMITED
Tel: +84-8-3910-5945

India

India Ahmedabad FA Center
MITSUBISHI ELECTRIC INDIA PVT. LTD.
Ahmedabad Branch
Tel: +91-7965120063

India Bangalore FA Center
MITSUBISHI ELECTRIC INDIA PVT. LTD.
Bangalore Branch
Tel: +91-80-4020-1600

India Chennai FA Center
MITSUBISHI ELECTRIC INDIA PVT. LTD.
Chennai Branch
Tel: +91-4445548772

India Gurgaon FA Center
MITSUBISHI ELECTRIC INDIA PVT. LTD.
Gurgaon Head Office
Tel: +91-124-463-0300

India Pune FA Center
MITSUBISHI ELECTRIC INDIA PVT. LTD.
Pune Branch
Tel: +91-20-2710-2000

Americas

USA

North America FA Center
MITSUBISHI ELECTRIC AUTOMATION, INC.
Tel: +1-847-478-2100

Mexico

Mexico City FA Center
MITSUBISHI ELECTRIC AUTOMATION, INC.
Mexico Branch
Tel: +52-55-3067-7511

Mexico FA Center
MITSUBISHI ELECTRIC AUTOMATION, INC.
Queretaro Office
Tel: +52-442-153-6014

Mexico Monterrey FA Center
MITSUBISHI ELECTRIC AUTOMATION, INC.
Monterrey Office
Tel: +52-55-3067-7521

Brazil

Brazil FA Center
MITSUBISHI ELECTRIC DO BRASIL COMERCIO E SERVICOS LTDA.
Tel: +55-11-4689-3000

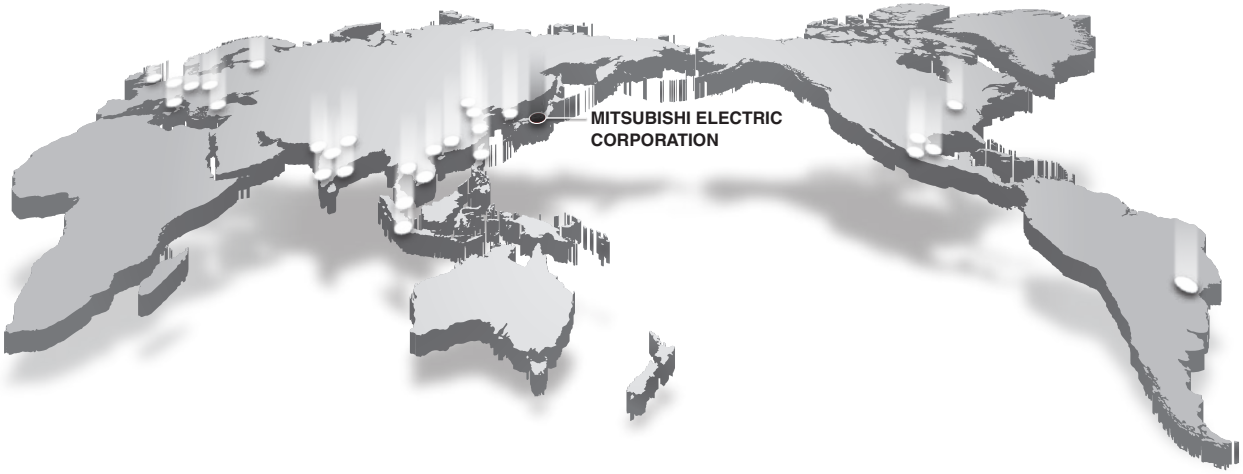

List of Instruction Manuals

Relevant manuals are listed below:

Servo System Controller

Manual name	Manual No.
MELSEC iQ-R Motion Module User's Manual (Startup)	IB-0300406ENG
MELSEC iQ-R Motion Module User's Manual (Application)	IB-0300411ENG
MELSEC iQ-R Motion Module User's Manual (Network)	IB-0300426ENG
MELSEC iQ-R Programming Manual (Motion Module Instructions, Standard Functions/Function Blocks)	IB-0300431ENG

Servo Amplifier

Manual name	Manual No.
MR-J5-G/MR-J5W-G User's Manual (Introduction)	SH-030294ENG
MR-J5-A User's Manual (Introduction)	SH-030296ENG
MR-J5 User's Manual (Hardware)	SH-030298ENG
MR-J5 User's Manual (Function)	SH-030300ENG
MR-J5 User's Manual (Communication Function)	SH-030302ENG
MR-J5 User's Manual (Object Dictionary)	SH-030304ENG
MR-J5 User's Manual (Adjustment)	SH-030306ENG
MR-J5-G/MR-J5W-G User's Manual (Parameters)	SH-030308ENG
MR-J5-A User's Manual (Parameters)	SH-030310ENG
MR-J5 User's Manual (Trouble Shooting)	SH-030312ENG

Servo Motor

Manual name	Manual No.
Rotary Servo Motor User's Manual (HK Series)	SH-030314ENG
Linear Servo Motor User's Manual	SH-030316ENG
Direct Drive Motor User's Manual	SH-030318ENG

Others

Manual name	Manual No.
EMC Installation Guidelines	IB-67310
MR-J5 Partner's Encoder User's Manual	SH-030320ENG

Android and Google Play are trademarks of Google Inc.
Apple, iPad, iPad Air, iPad mini, and App Store are trademarks of Apple Inc., registered in the U.S. and other countries.
Microsoft, Windows, Internet Explorer, and Windows Vista, Visual C++, Visual Studio, and IntelliSense are either registered trademarks or trademarks of Microsoft Corporation in the United States and/or other countries.
Celeron and Pentium are either registered trademarks or trademarks of Intel Corporation in the United States and/or other countries.
Ethernet is a registered trademark of Fuji Xerox Co., Ltd. in Japan.
All other company names and product names used in this document are trademarks or registered trademarks of their respective companies.

Precautions before use

This publication explains the typical features and functions of the products herein and does not provide restrictions or other information related to usage and module combinations. Before using the products, always read the product user manuals. Mitsubishi Electric will not be held liable for damage caused by factors found not to be the cause of Mitsubishi Electric; opportunity loss or lost profits caused by faults in Mitsubishi Electric products; damage, secondary damage, or accident compensation, whether foreseeable or not, caused by special factors; damage to products other than Mitsubishi Electric products; or any other duties.

⚠ For safe use

- To use the products given in this publication properly, always read the relevant manuals before beginning operation.
- The products have been manufactured as general-purpose parts for general industries, and are not designed or manufactured to be incorporated in a device or system used in purposes related to human life.
- Before using the products for special purposes such as nuclear power, electric power, aerospace, medicine or passenger-carrying vehicles, consult with Mitsubishi Electric.
- The products have been manufactured under strict quality control. However, when installing the products where major accidents or losses could occur if the products fail, install appropriate backup or fail-safe functions in the system.

YOUR SOLUTION PARTNER

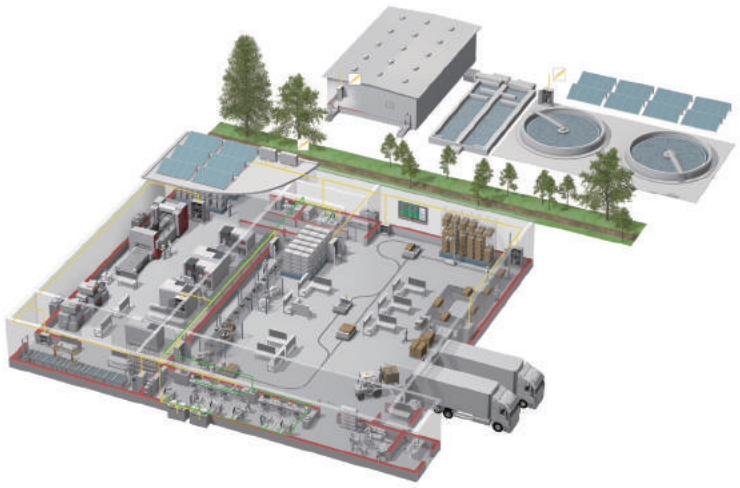

Mitsubishi Electric offers a wide range of automation equipment from PLCs and HMIs to CNC and EDM machines.



Low voltage: MCCB, MCB, ACB



Medium voltage: VCB, VCC



Power monitoring, energy management



Compact and Modular Controllers



Inverters, Servos and Motors



Visualisation: HMIs



Numerical Control (NC)



Robots: SCARA, Articulated arm

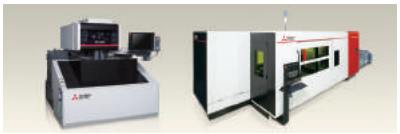

Processing machines: EDM, Lasers, IDS



Transformers, Air conditioning, Photovoltaic systems

A NAME TO TRUST

Since its beginnings in 1870, some 45 companies use the Mitsubishi name, covering a spectrum of finance, commerce and industry.

The Mitsubishi brand name is recognized around the world as a symbol of premium quality.

Mitsubishi Electric Corporation is active in space development, transportation, semi-conductors, energy systems, communications and information processing, audio visual equipment and home electronics, building and energy management and automation systems, and has 237 factories and laboratories worldwide in over 121 countries.

This is why you can rely on Mitsubishi Electric automation solution - because we know first hand about the need for reliable, efficient, easy-to-use automation and control in our own factories.

As one of the world's leading companies with a global turnover of over 4 trillion Yen (over $40 billion), employing over 100,000 people, Mitsubishi Electric has the resource and the commitment to deliver the ultimate in service and support as well as the best products.

* Not all products are available in all countries.

Mitsubishi Electric AC Servo System MELSERVO-J5

Country/Region	Sales office	
USA	Mitsubishi Electric Automation, Inc. 500 Corporate Woods Parkway, Vernon Hills, IL 60061, U.S.A.	Tel : +1-847-478-2100
Mexico	Mitsubishi Electric Automation, Inc. Mexico Branch Boulevard Miguel de Cervantes Saavedra 301, Torre Norte Piso 5, Ampliacion Granada, Miguel Hidalgo, Ciudad de Mexico, Mexico, C.P.11520	Tel : +52-55-3067-7512
Brazil	Mitsubishi Electric do Brasil Comercio e Servicos Ltda. Avenida Adelino Cardana, 293, 21 andar, Bethaville, Barueri SP, Brazil	Tel : +55-11-4689-3000
Germany	Mitsubishi Electric Europe B.V. German Branch Mitsubishi-Electric-Platz 1, 40882 Ratingen, Germany	Tel : +49-2102-486-0
UK	Mitsubishi Electric Europe B.V. UK Branch Travellers Lane, UK-Hatfield, Hertfordshire, AL10 8XB, U.K.	Tel : +44-1707-28-8780
Italy	Mitsubishi Electric Europe B.V. Italian Branch Centro Direzionale Colleoni - Palazzo Sirio, Viale Colleoni 7, 20864 Agrate Brianza (MB), Italy	Tel : +39-039-60531
Spain	Mitsubishi Electric Europe B.V. Spanish Branch Carretera de Rubi, 76-80-Apdo. 420, E-08190 Sant Cugat del Valles (Barcelona), Spain	Tel : +34-935-65-3131
France	Mitsubishi Electric Europe B.V. French Branch 25, Boulevard des Bouvets, 92741 Nanterre Cedex, France	Tel : +33-1-55-68-55-68
Czech Republic	Mitsubishi Electric Europe B.V. Czech Branch, Prague Office Pekarska 621/7, 155 00 Praha 5, Czech Republic	Tel : +420-255-719-200
Poland	Mitsubishi Electric Europe B.V. Polish Branch ul. Krakowska 50, 32-083 Balice, Poland	Tel : +48-12-347-65-00
Russia	Mitsubishi Electric (Russia) LLC St. Petersburg Branch Piskarevsky pr. 2, bld 2, lit “Sch”, BC “Benua”, office 720; 195027 St. Petersburg, Russia	Tel : +7-812-633-3497
Sweden	Mitsubishi Electric Europe B.V. (Scandinavia) Fjelievagen 8, SE-22736 Lund, Sweden	Tel : +46-8-625-10-00
Turkey	Mitsubishi Electric Turkey A.S. Umraniye Branch Serifali Mahallesi Nutuk Sokak No:5, TR-34775 Umraniye / Istanbul, Turkey	Tel : +90-216-526-3990
UAE	Mitsubishi Electric Europe B.V. Dubai Branch Dubai Silicon Oasis, P.O.BOX 341241, Dubai, U.A.E.	Tel : +971-4-3724716
South Africa	Adroit Technologies 20 Waterford Office Park, 189 Witkoppen Road, Fourways, South Africa	Tel : +27-11-658-8100
China	Mitsubishi Electric Automation (China) Ltd. Mitsubishi Electric Automation Center, No.1386 Hongqiao Road, Shanghai, China	Tel : +86-21-2322-3030
Taiwan	SETSUYO ENTERPRISE CO., LTD. 6F, No.105, Wugong 3rd Road, Wugu District, New Taipei City 24889, Taiwan	Tel : +886-2-2299-2499
Korea	Mitsubishi Electric Automation Korea Co., Ltd. 7F to 9F, Gangseo Hangang Xi-tower A, 401, Yangcheon-ro, Gangseo-Gu, Seoul 07528, Korea	Tel : +82-2-3660-9529
Singapore	Mitsubishi Electric Asia Pte. Ltd. 307 Alexandra Road, Mitsubishi Electric Building, Singapore 159943	Tel : +65-6473-2308
Thailand	Mitsubishi Electric Factory Automation (Thailand) Co., Ltd. 12th Floor, SV.City Building, Office Tower 1, No. 896/19 and 20 Rama 3 Road, Kwaeng Bangpongpang, Khet Yannawa, Bangkok 10120, Thailand	Tel : +66-2682-6522 to 6531
Indonesia	PT. Mitsubishi Electric Indonesia Gedung Jaya 8th Floor, JL. MH. Thamrin No.12, Jakarta Pusat 10340, Indonesia	Tel : +62-21-3192-6461
Vietnam	Mitsubishi Electric Vietnam Company Limited Unit 01-04, 10th Floor, Vincom Center, 72 Le Thanh Ton Street, District 1, Ho Chi Minh City, Vietnam	Tel : +84-28-3910-5945
India	Mitsubishi Electric India Pvt. Ltd. Pune Branch Emerald House, EL-3, J Block, M.I.D.C., Bhosari, Pune - 411026, Maharashtra, India	Tel : +91-20-2710-2000
Australia	Mitsubishi Electric Australia Pty. Ltd. 348 Victoria Road, P.O. Box 11, Rydalmere, N.S.W 2116, Australia	Tel : +61-2-9684-7777

Mitsubishi Electric Corporation Nagoya Works is a factory certified for ISO14001 (standards for environmental management systems) and ISO9001(standards for quality assurance management systems)

EC 98 J 2017

0051

ISO 9001
BUREAU VERITAS
Certification

0008

MITSUBISHI ELECTRIC CORPORATION

HEAD OFFICE: TOKYO BUILDING, 2-7-3, MARUNOUCHI, CHIYODA-KU, TOKYO 100-8310, JAPAN
NAGOYA WORKS: 1-14, YADA-MINAMI 5, HIGASHI-KU, NAGOYA, JAPAN

L(NA)03179ENG-A 1905 (IP)

New publication, effective May 2019
Specifications are subject to change without notice.