


# Surge Protective Device

- BKS Series (Din rail type)
- SP Series (Box type Products)

LS IS




# Surge Protective Device

## BKS Series (Din-rail type Product)
## SP Series (Box type Product)

**The surge protective device is applied to the alternating current 50/60Hz, 220V/380V power system and provides the protection from the surge overvoltage of an electric system.**
**If the protective device is normal, the display becomes green. The display becomes red after operation (abnormal or after an accident).**

# SPD

Surge Protective Device

**The surge protective device is applied to the alternating current 50/60Hz, 220V/385V power system and provides the protection from the surge overvoltage of an electric**

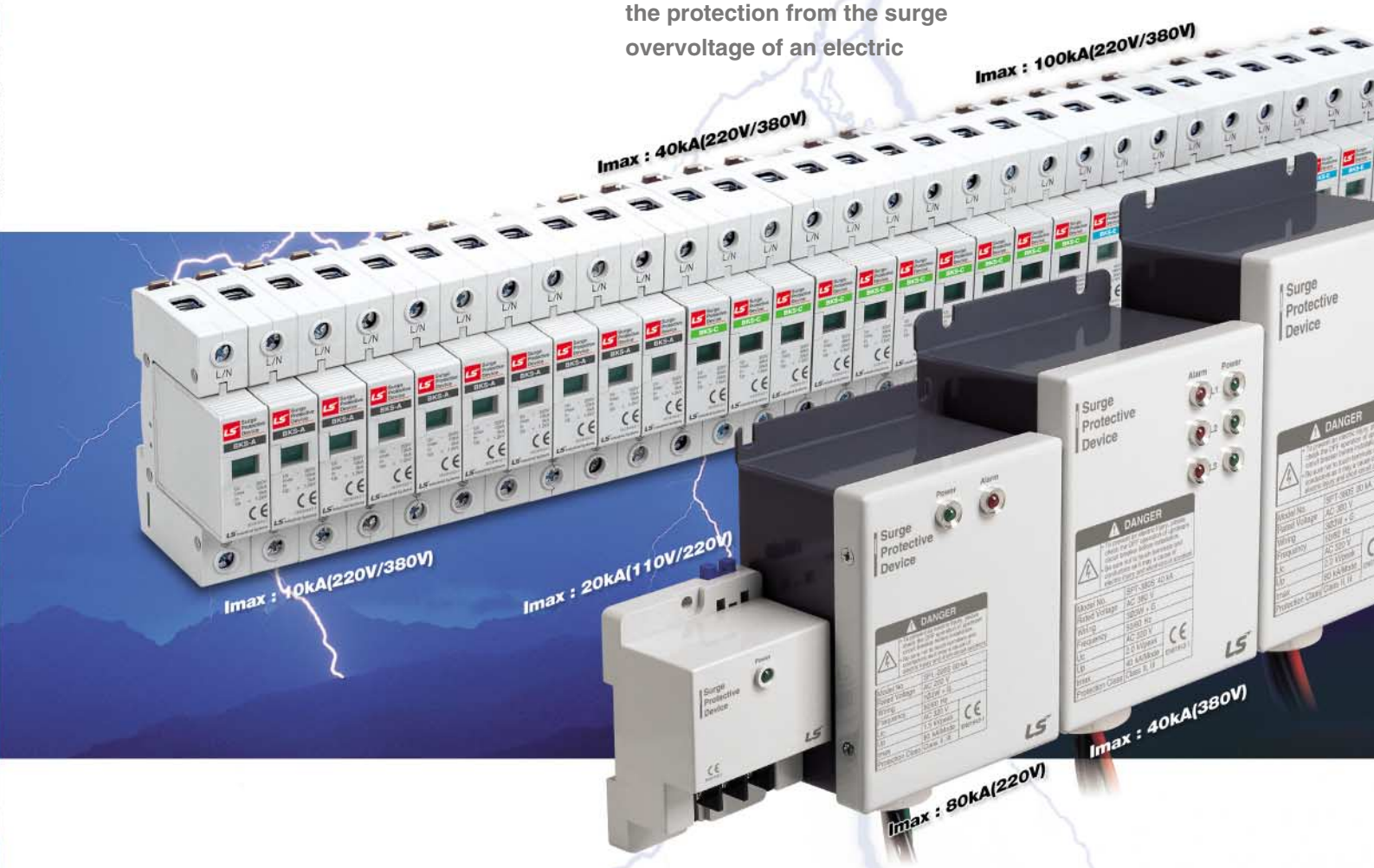


## Contents


| | |
|---|---|
| **BKS Series (Din-rail type)** | |
| Product description | **04** |
| Product rating | **04** |
| External dimension | **05** |
| Installation wiring method | **05** |
| **SP Series (Box type)** | |
| Product description | **06** |
| Product rating | **06** |
| External dimension | **08** |
| Installation wiring method | **12** |
| BKS, SP, Series type and Name structure | **13** |
| **Technical Materials** | **14** |

# BKS Series (Din-rail type)

## Product description

The BKS surge protective device is applied to the alternating current 50/60Hz, 220V/380V power system and provides the protection from the surge overvoltage of an electric system.
Moreover, it is the protection element (MOV) replacement type and is the product with convenience and economic efficiency.
However, only the protection module is provided so that separate components have to be combined according to the site conditions.
If the protective device is normal, the display becomes green. The display becomes red after operation (abnormal or after an accident).



## Product rating

| | BKS-A | BKS-B | BKS-C | BKS-D | BKS-E | BKS-G | BKS-M |
|---|---|---|---|---|---|---|---|
| Pole | 1, 2, 3, 4 Pole | | | | | | |
| Rated system voltage, Un AC [V] | 220V | 220/380V | | | | | |
| Maximum continuous operating voltage, Uc AC [V] | 320V | 320V | 320V | 420V | 460V | 320V | 275V |
| Voltage protection level, Up [kV] | ≤ 1.0kV | ≤ 1.2kV | ≤ 1.5kV | ≤ 2.0kV | ≤ 2.3kV | ≤ 1.5kV | ≤ 2.5kV |
| Maximum discharge current, Imax (8/20㎲) [kA, per mode] | 10kA | 20kA | 40kA | 60kA | 70kA | 40kA | 100kA |
| Response time, ns | < 25 ns | | | | | | |
| Usable ambient temperature ℃ | -40 ~ +80℃ | | | | | | |
| Usable frequency, Hz | 50/60 Hz | | | | | | |
| Attachment type | DIN-rail attachment type | | | | | | |
| Operation status indication window | Normal operation: Green, Abnormal/After an accident: Red | | | | | | |
| Min. terminal connection | 1 Phase and Neutral 2.5, Earth 4 | | | | | | |
| Protection class | Class Ⅲ | | Class Ⅱ | | | | |
| Alarm Contact | No | No | No | No | No | Yes | Yes |

* The surge protective device starts to operate above the maximum continuous operating voltage Uc (MCOV).

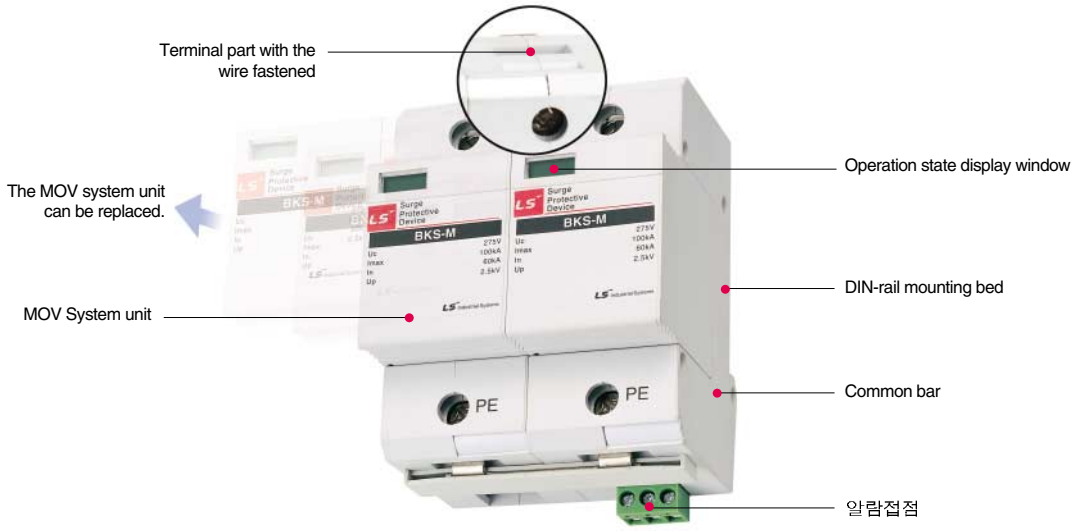

# External dimension

<BKS-A, C, E>

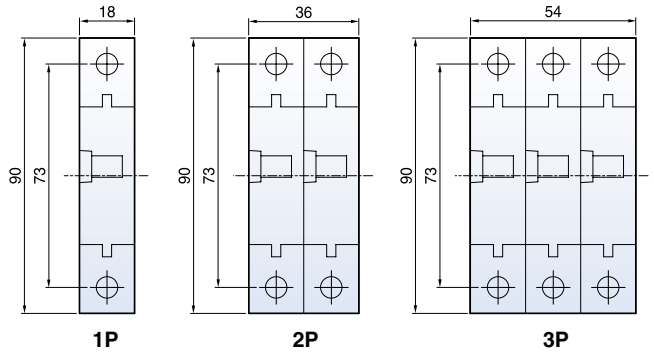


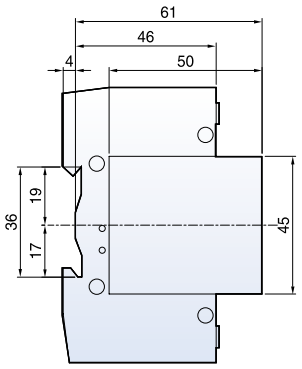


Panel cutting size

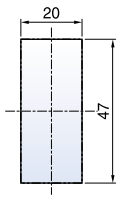


<BKS-G, M>

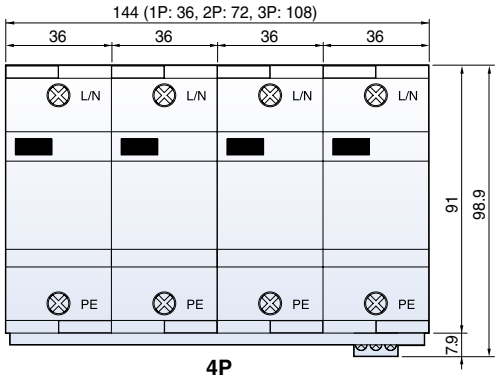


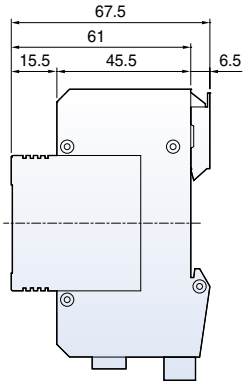


# Installation wiring method

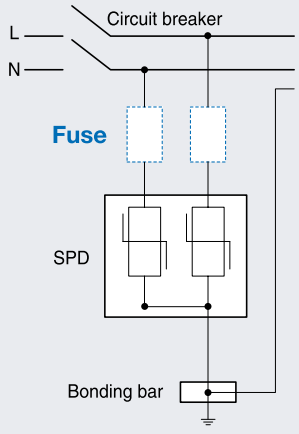


Single phase diagram

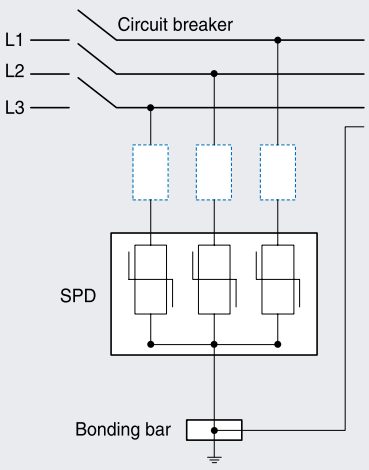


3 Phase 3 Line diagram

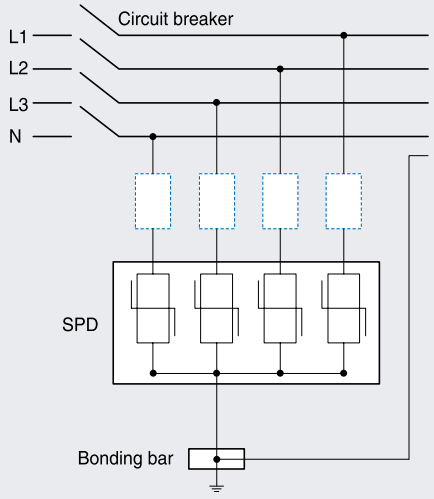


3 Phase 4 Line diagram

* A separate fuse can be installed depending on the side conditions. (The fuse should be purchased separately is not supplied by LS.)

# SP Series (Box type)

## Product description

The SP series surge protective device is applied to the alternating current 50/60Hz, 220V/380V power system and provides the protection from the surge overvoltage of an electric system.
Moreover, the protection module, disconnectable device (fuse), and fastened power and ground wires are organized into the all-in-one steel cabinet with convenient installation and stability.
If the protective device is normal, the display becomes green. The display becomes red after operation (abnormal or after an accident).





## Product rating

### - Single phase 2W+G (SPL)

| | SPL-110S | SPL-220S | |
|---|---|---|---|
| Pole | 2W+G | 2W+G | |
| Rated system voltage, Un AC [V] | 110V/220V | 220V | |
| Maximum continuous operating voltage, Uc AC [V] | 320V | 320V | |
| Voltage protection level, Up [kV] | ≤1.5kV | ≤1.5kV | |
| Maximum discharge current, Imax (8/20㎲) [kA, per mode] | 20kA | 40kA | 80kA |
| Response time, ns | 5 ns | | |
| Usable ambient temperature, ℃ | -40 ~ +70℃ | | |
| Usable frequency, Hz | 50/60 Hz | | |
| Attachment type | Screw attachment type | | |
| Operation status indication window | Normal operation : Green LED lighting, Abnormal/After an accident : Red lighting | | |
| Protection class | Class Ⅲ | Class Ⅱ/ Class Ⅲ | |
| Protection mode | L1-N, L1-G, N-G | | |






## Product rating

### -Three phase 3W+G (SPT) AC 380V

| | SPT-380S | | | |
|---|---|---|---|---|
| Pole | 3W+G | | | |
| Rated system voltage, Un AC [V] | 380V | | | |
| Maximum continuous operating voltage, Uc AC [V] | 320V | | | |
| Voltage protection level, Up [kV] | ≤2.0kV | | | |
| Maximum discharge current, Imax (8/20㎲) [kA, per mode] | 40kA | 80kA | 120kA | 160kA |
| Response time, ns | < 5 ns | | | |
| Usable ambient temperature, ℃ | -40 ~ +70℃ | | | |
| Usable frequency, Hz | 50/60 Hz | | | |
| Attachment type | Screw attachment type | | | |
| Operation status indication window | Normal operation : Green LED lighting, Abnormal/After an accident : Red lighting | | | |
| Protection class | Class Ⅱ/ Class Ⅲ | | Class Ⅰ/ Class Ⅱ/ Class Ⅲ | |
| Protection mode | L1-G, L2-G, L3-G | | | |



## Product rating

### -Three phase 3W+G (SPT) AC 440V

| | SPT-440S | | | |
|---|---|---|---|---|
| Pole | 3W+G | | | |
| Rated system voltage, Un AC [V] | 440V | | | |
| Maximum continuous operating voltage, Uc AC [V] | 320V | | | |
| Voltage protection level, Up [kV] | ≤2.0kV | | | |
| Maximum discharge current, Imax (8/20㎲) [kA, per mode] | 40kA | 80kA | 120kA | 160kA |
| Response time, ns | < 5 ns | | | |
| Usable ambient temperature, ℃ | -40 ~ +70℃ | | | |
| Usable frequency, Hz | 50/60 Hz | | | |
| Attachment type | Screw attachment type | | | |
| Operation status indication window | Normal operation : Green LED lighting, Abnormal/After an accident : Red lighting | | | |
| Protection class | Class Ⅱ/ Class Ⅲ | | Class Ⅰ/ Class Ⅱ/ Class Ⅲ | |
| Protection mode | L1-G, L2-G, L3-G | | | |



## Product rating

### -Three phase 4W+G (SPY)

| | SPY-220S | | | |
|---|---|---|---|---|
| Pole | 4W+G | | | |
| Rated system voltage, Un AC [V] | 220/380V | | | |
| Maximum continuous operating voltage, Uc AC [V] | 320V | | | |
| Voltage protection level, Up [kV] | ≤2.0kV | | | |
| Maximum discharge current, Imax (8/20㎲) [kA, per mode] | 40kA | 80kA | 120kA | 160, 200, 240kA |
| Response time, ns | < 5 ns | | | |
| Usable ambient temperature, ℃ | -40 ~ +70℃ | | | |
| Usable frequency, Hz | 50/60 Hz | | | |
| Attachment type | Screw attachment type | | | |
| Operation status indication window | Normal operation : Green LED lighting, Abnormal/After an accident : Red lighting | | | |
| Protection class | Class Ⅱ/ Class Ⅲ | | Class Ⅰ/ Class Ⅱ/ Class Ⅲ | |
| Protection mode | L1-N, L2-N, L3-N, N-G | | | |

## External dimension

### SPL-110S Type 20kA

[Unit: mm]

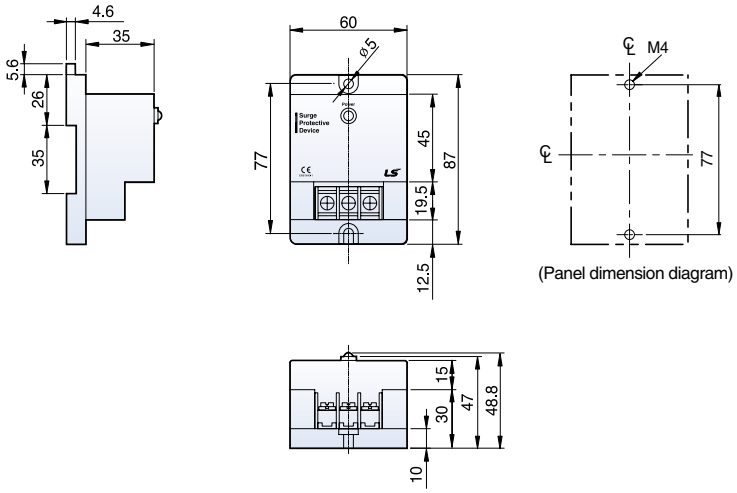


### SPL-220S Type 40kA

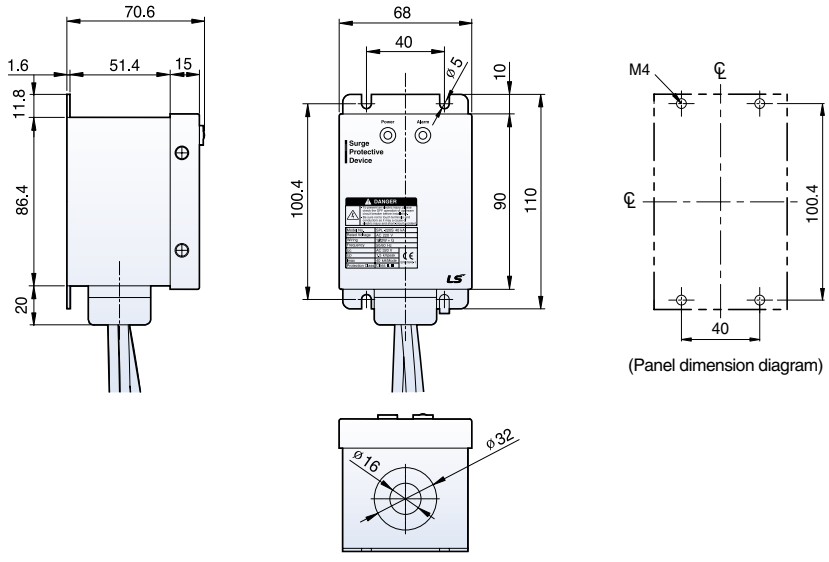

## SPL-220S 80kA

[Unit: mm]

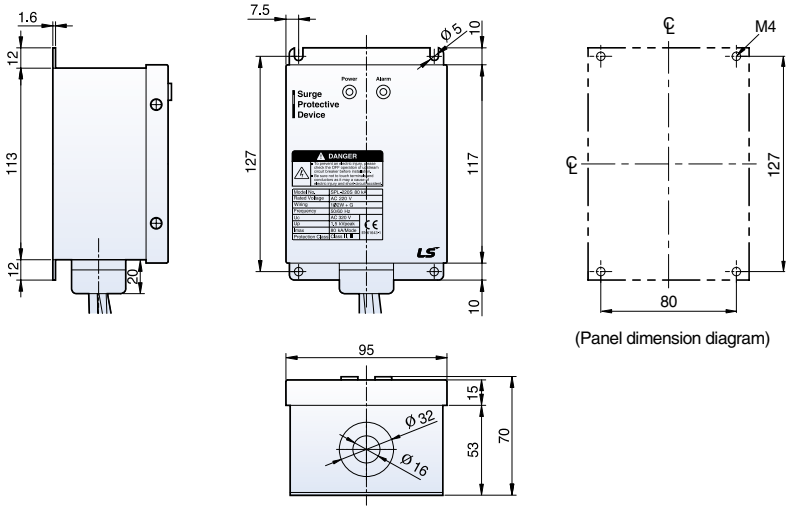


(Panel dimension diagram)

## SPY-220S/SPT-380S, 440S 40kA

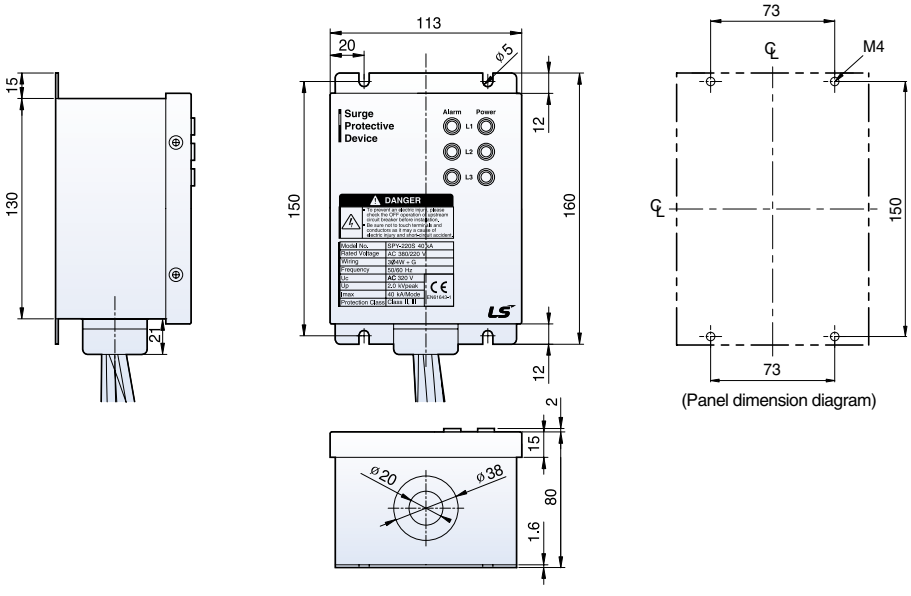


(Panel dimension diagram)

## External dimension

### SPY-220S/SPT-380S, 440S 80kA

[Unit: mm]

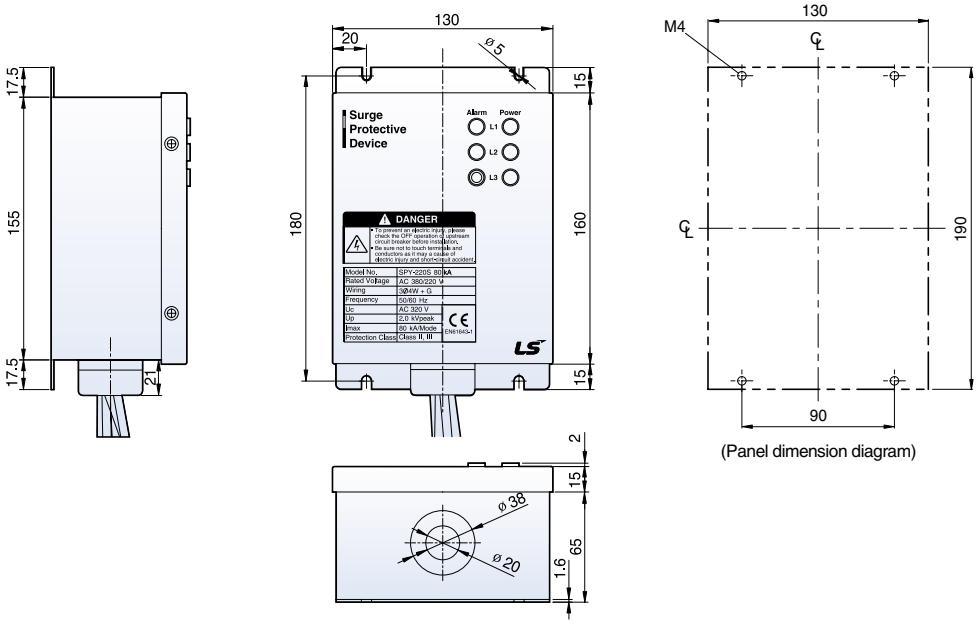


(Panel dimension diagram)

### SPY-220S/SPT-380S, 440S 120kA

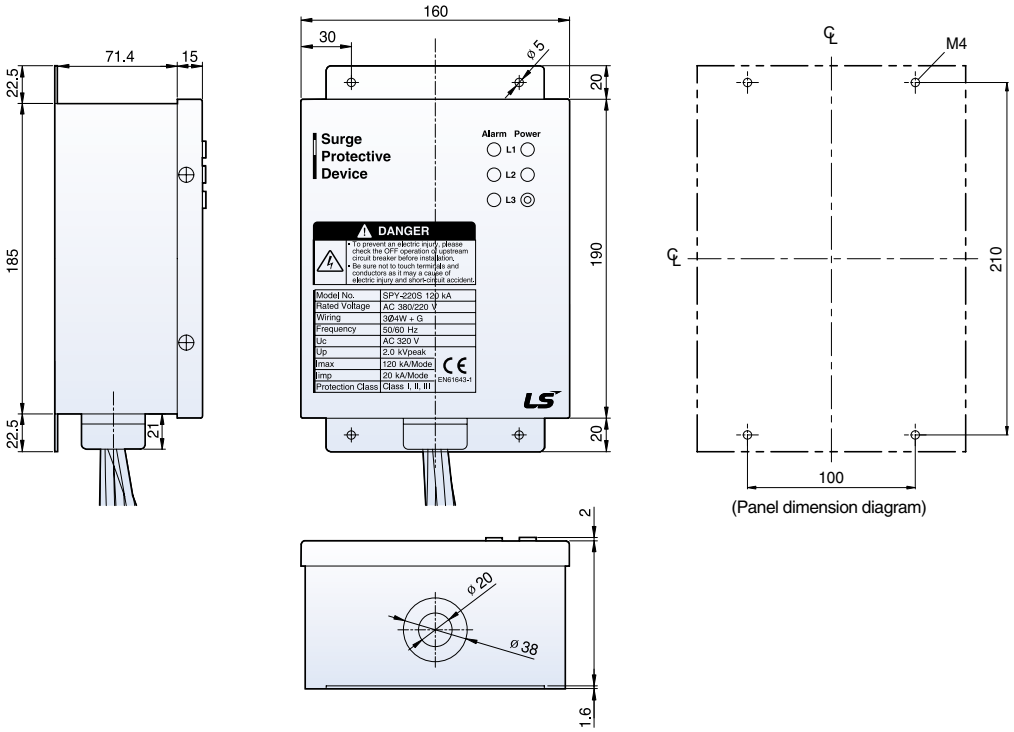


(Panel dimension diagram)

## SPY-220S/SPT-380S, 440S 160kA

[Unit: mm]

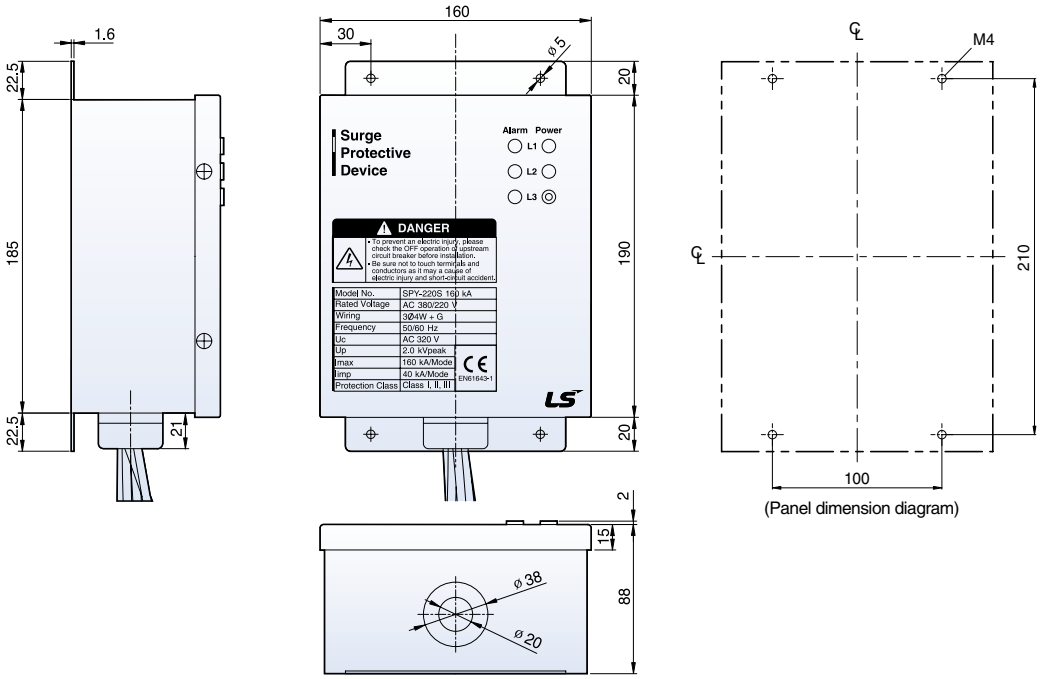


## SPY-220S 200kA, 240kA

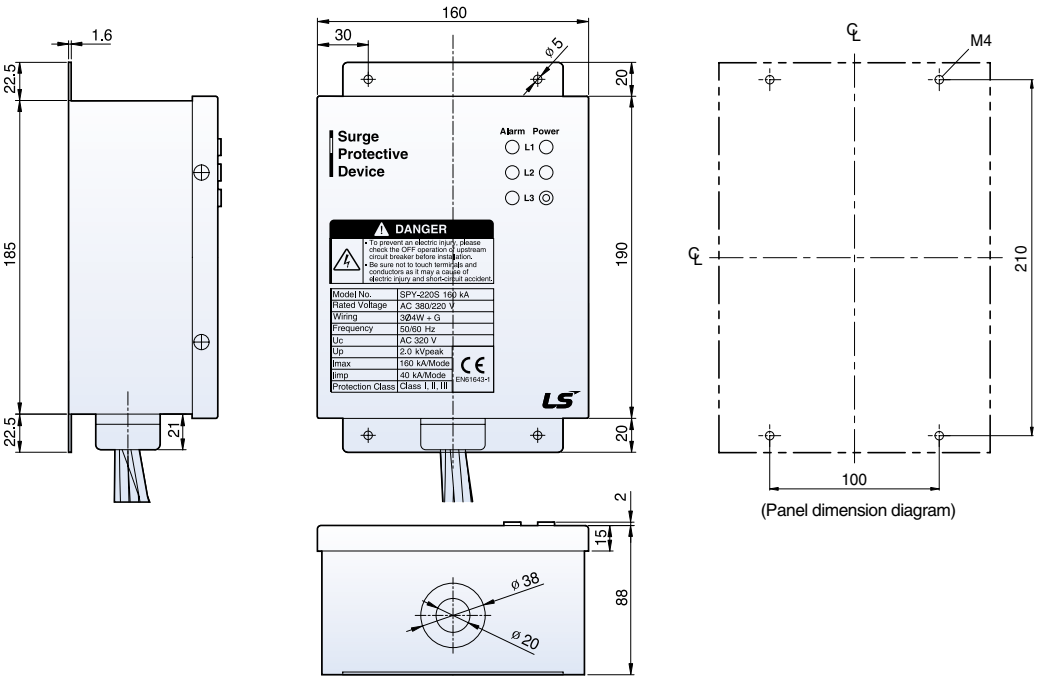

# SP Series (Box type)

## Installation wiring method

### Single phase 2W+G(SPL-110S 20kA)

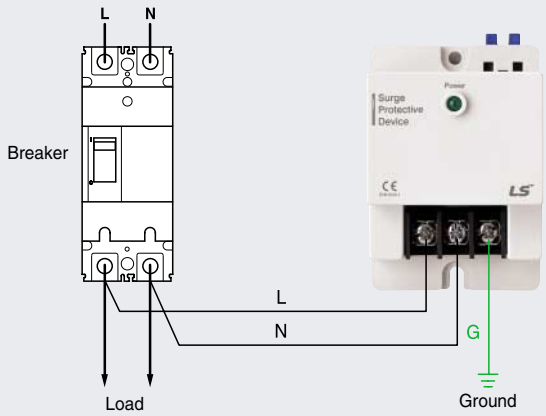


### Single phase 2W+G(SPL-220S 40kA/80kA)

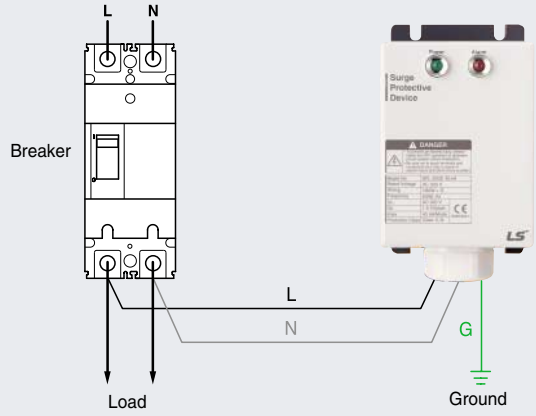


### Three phase 3W+G(SPT Type)

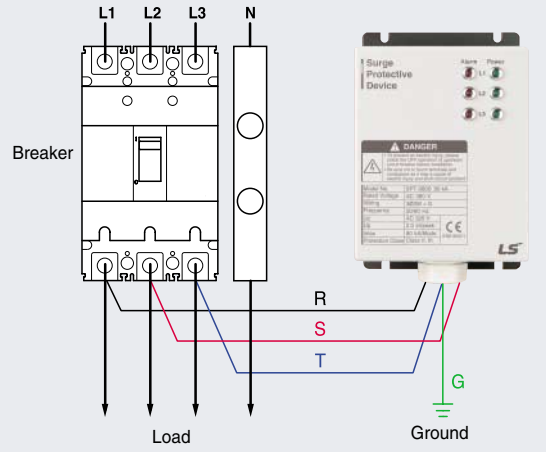


### Three phase 4W+G(SPY Type)

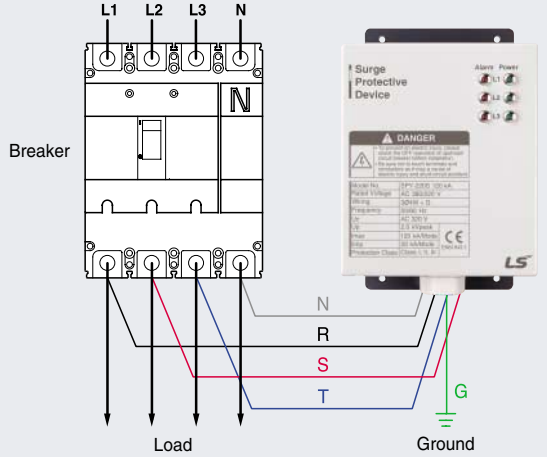

# BKS, SP Series type and Name structure

## BKS Series

### Din-Rail Type

**BKS** — **A** — **1P**

| Series category |
|---|
| Basic type |

| Maximum discharge current | |
|---|---|
| A | 10kA |
| B | 20kA |
| C | 40kA |
| D | 60kA |
| E | 100kA |
| G | 40kA |
| M | 100kA |

| Poles | |
|---|---|
| 1P | 1 Pole |
| 2P | 2 Pole |
| 3P | 3 Pole |
| 4P | 4 Pole |

## SP Series

### BOX Type

**SP** — **L** — **110** — **S** — **20kA**

| Series category |
|---|
| Basic type |

| Poles | |
|---|---|
| L | 2W+G |
| T | 3W+G |
| Y | 4W+G |

| Rated system voltage | |
|---|---|
| 110 | AC 110/220V |
| 220 | AC 220V |
| 380 | AC 380V |
| 440 | AC 440V |

| Type category | |
|---|---|
| S | Basic type |

| Maximum discharge current | |
|---|---|
| 20 | 20kA |
| 40 | 40kA |
| 80 | 80kA |
| 120 | 120kA |
| 160 | 160kA |
| 200 | 200kA |
| 240 | 240kA |



# Surge Protective Device (BKS, SP series)

## Concept of surge



According to the definition of IEC, surge is delivered along the line or circuit and is the transient wave form of the electric current, voltage, or power with rapidly increasing and gradually decreasing characteristics. (IEC IEV 161-02-01)
If it is rainy with flashing lightning, the accident of the dead Internet or phone often occurs. Moreover, when the light or electric machine switch is turned on, the audio sound is distorted or the TV screen is fuzzy. It is caused by surge.

## Main types of power problems

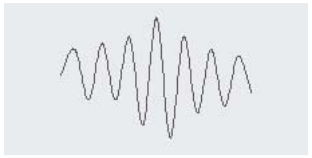

### Surges, swells, and short-term overvoltage

- Occurring during lightning and when turning on or off the system power line, turning on or off the load, and operating the device
- The voltage with the Rated system voltage exceeding 150% is called surge.
- Breakage or degradation of an electronic part (equipment)

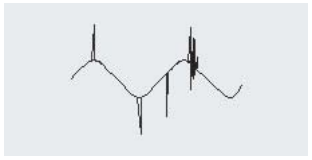

### Transients

- Transient is similar to surge but momentarily occurs only in the 1~2 sine wave form.
- Impossible to process large data with equipment damaged
- The positive impulse transient is also called spike.

## Causes of surge occurrence

### 1. Surge caused by natural phenomena



### Direct strike

Lightning directly strikes the structure, equipment, and power line, and the voltage with about 20kv or higher and the overcurrent with several kA~300kA or higher occurs.



### Indirect lightning

It strikes the power transmission and communication line, and surge is transmitted through the line. It occurs the most frequently and has the very large energy with 6,000V or higher so that the damage caused by it is the most frequent and the most.



### Inducement lightning

Surge occurs due to the surge caused by the ground potential rapidly increased by the inflow of the high voltage and high current induced through the conductor such as the power line, communication line, and metal pipe buried in the land near the lightning point.

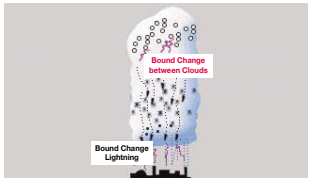


### Bound change

The charge induced with the bound change between the ground surface and a cloud, inside a cloud, and between clouds flows into the power line, metal body, or ground surface so that equipment is damaged.

### 2. Switching and starting surge

The switching surge with the maximum 6,000V when the substation switches the high voltage power supply line and with the maximum 3,000V when the main switch of the distribution cabinet is operated can flow in.
Furthermore, the maximum voltage impulse with 3,000V occurs when operating heavy equipment. The impulse with 400~1,000V and the noise when using the arc welding device, compressor, vacuum cleaner, or office machine nearby occur additionally.

## Damage caused by surge

Nowadays, The damage caused by surge is rapidly increased by building intelligent buildings, expanding the introduction of various control systems, and introducing the ubiquitous environment. There has been no correct research on the damage caused by surge in the nation so far. However, in the United States, it is estimated that the damage of time and expenses due to the occurrence of failure of the electronic system caused by the high voltage and overcurrent reaches 26 billion USD only in the industry every year.
As shown in the following table, 88.3% of unknown failures in case of electronic equipment are caused by surge.

| Power disturbance | Monthly average occurrence times | Percentage (%) |
|---|---|---|
| Oscillatory transients | 62.2 | 48.8 |
| Voltage spike | 50.7 | 39.5 |
| Under voltage | 14.4 | 11.2 |
| Over voltage | 00.0 | 0.00 |
| Blackout | 0.06 | 0.05 |
| Total | 127.9 | 100 |

*Transaction on "Power Apparatus and system" July-August. 1974 issue 1974 IEEE (Institute of Electrical and Electronic Engineers)

## Surge test wave form (IEC Specification)

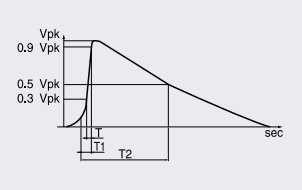


### Surge voltage wave form

**1.2/50 $\mu$s Surge voltage wave form**

In case of the voltage wave form, it takes 1.2 $\mu$s(IEC 60-1) for the induced impulse to go up from the start to the 10~90% of the maximum value induced at that time and 50 $\mu$sfor it to reach the 50%(IEC 469-1).
The elevation time of the voltage wave form is short in comparison with that of the current wave form, but the sustenance time continues more than two times in comparison with the current.

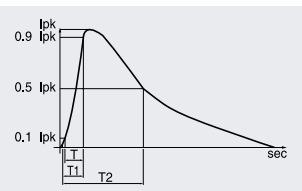


### Surge current wave form

**8/20 $\mu$s Surge current wave form**

In case of the current wave form, it takes 8 $\mu$s to reach the 90% of the maximum current value (1pk) in the 10% of the elevation curve and 20 $\mu$s to go down to the 50% of the descending curve.

## Overview of lightning



The phenomenon of lightning that is the major source of surge occurrence is the source of occurrence damaging the state-of-the-art equipment and human life.
If the direct strike comes into the information system equipment, the equipment and human life cannot be protected. Therefore, as for the measure for the damage caused by the direct strike, the proper protection region should be protected first with the selected lightning rod, and SPD should be used to prevent the facility damage in the system.

## Principle of lightning creation

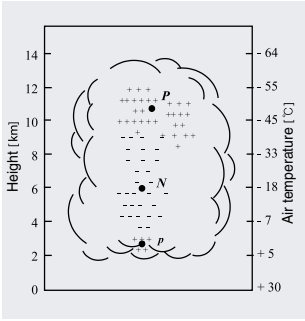


The thundercloud is the long vertical cloud and is 12,000m or higher in the summer. The representative explanation of the mechanism of charge separation and accumulation achieved within the thundercloud is as follows. There is a strong elevation air current within the thundercloud, and the large pellets of hail collide with tiny ice particles within it. The large pellets of hail are charged with the positive electricity and are transported upward with the elevation air current effect.
Accordingly, the positive charge is accumulated in the upper side within the thundercloud, and the negative charge is accumulated in the lower side.
Furthermore, the positive charge called 'the pocket charge' occurring from another mechanism is partially accumulated in the lower side.

## Lightning progress mechanism

As for the lightning advanced by the downward leader with negative polarity, the preparatory insulation destruction occurs from the pocket positive charge existing in the lowest part of the negative charge cloud and the thundercloud, and the step leader is created in the lower end of the thundercloud accordingly and moves toward the land with the repetitive advancement and suspension. If the upward streamer charge occurs from the land when the step leader approaches the land closely and meets the downward leader, the return stroke goes toward the thundercloud for a lot of charge from the land to neutralize the charge of the conductive passage of the step leader.

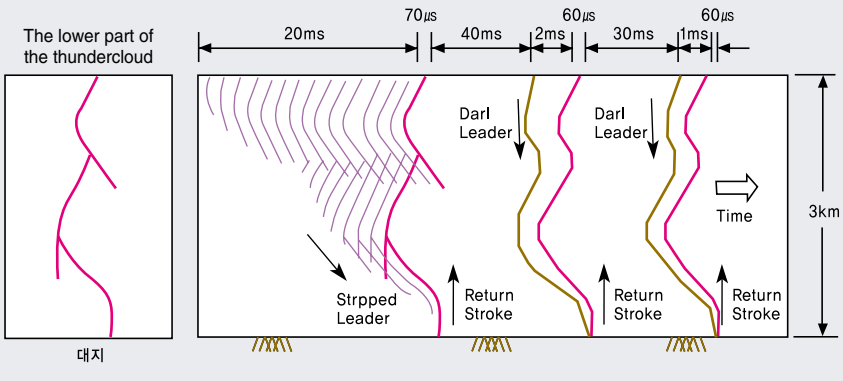

# Surge inflow path

The paths through which the lightning surge flows finally into the electrical and electronic equipment according to the lightning charge phenomenon are classified into three types.

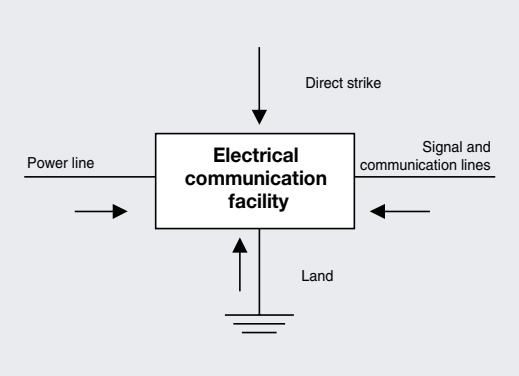


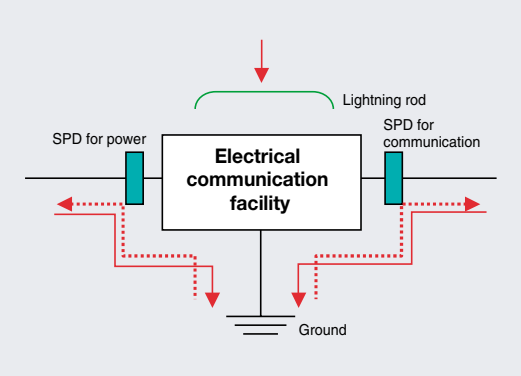


## Direct strike

It is the phenomenon that lightning directly falls on the lightning rod, building structure, power line, antenna, and pipe.
The whole lightning charge energy flows in so that the great destruction is accompanied.
Generally, the electrical device or electronic equipment is damaged near the progress path of the thunderstroke current, and there is a high risk of fire.
There is a rare possibility that the direct strike directly falls on the inside facility of the building with the external lightning protection facility such as lightning rod, but the part of a lightning rod (about 15% IEC 61643-12) can be classified as the power line or ground line. Likewise, the class I SPD should be installed in the power facility point (the distribution panel and main power panel bonded with the main ground terminal) through which the part of the direct stroke might flow.

## Indirect lightning

It is the case of occurrence of the direct strike in the region a bit distant from a building, the part of the lightning charge energy indirectly flows into the facility through the external drop wire and through the ground system. Therefore, the class II or III SPD should be installed in preparation for the indirect lightning surge flowing from the outside even in the closed environment that doesn't need the external lightning protection system such as a lightning rod.

## Induced lightning

It is the phenomenon occurring due to the strong electromagnetic wave induced when lightning strikes the lightning rod of a building or falls on the tree or surface of a ground building or when the charge between thunderclouds occurs in the near distance. It may occur in the trunk power line or in the intermediate point of communication and signal lines. In the branch point of the line 20m far from with the vertical wiring distance from the point inside he building with the class I SPD installed, the class II (Ex. distribution panel) or III (Ex. single load control panel and household distribution panel) SPD should be installed to prevent the inducement lightning.

## Damages due to surge

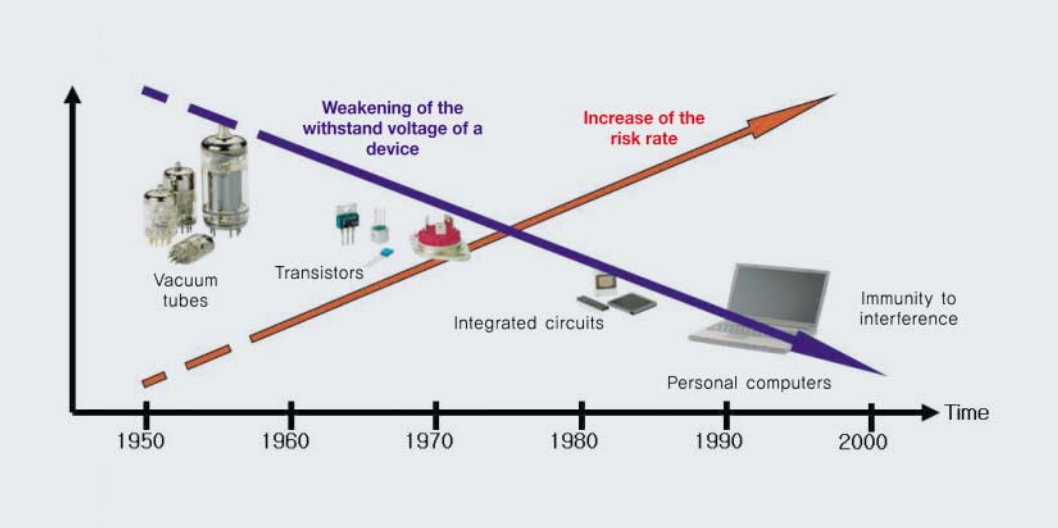


### Weakening of the withstand voltage

Applying the Small, Light, and Multi-Function IC: The devices damaged by surge due to the increase of various 100V or lower information and communication devices, the number of the devices damaged by surge is gradually increasing.

### Increase of the damage due to the network of a facility system

Occurrence of the surge inside the building due to the increase of network facilities in most of buildings damage all the equipment connected to the network.

### Increase of the devices with surge or noise occurrence

- Rapid increase of the switching power change devices
- Increase of inducement load
- Charge and discharge of the DC load

### Increase of lightning occurrence

As the number of thunderstorm days is increasing (11days=the average IKL for 20 years and 31 days for recent 4 years) due to the recent abnormal changes of weather and the subtropical climate is widespread in the nation, lightning will increase more, and the size of thunderstroke current will increase

### Increase of damages

Damages due to the fire, breakage, malfunction, resetting of an unmanned facility, and increase of the product manufacturing defect rate (semiconductor parts) are increasing.

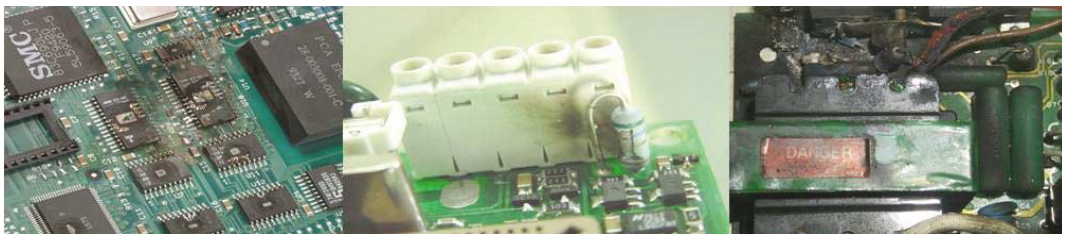


**Burn-out of the electric devices due to surge**

# What is SPD (Surge Protective Device)?

SPD is the device protecting various types of equipment from surge.
SPD is the device attenuating the overvoltage and noise and is called SPD or TVSS (Transient Voltage Surge Suppressor). Specialists in the industry call it SPD. The terms such as SPD and TVSS are used interchangeably.
SPD is the equipment designed to attenuate the dangerous overvoltage at the very short moment appearing in the power line or telephone line, data network, CCTV circuit, cable TV circuit, and the power line and control line connected to the electronic equipment.

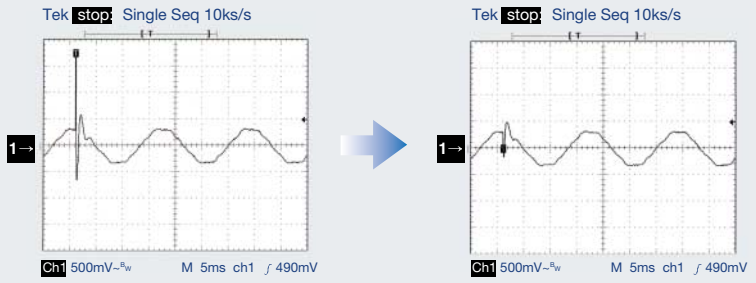


Wave form of Surge formation　　Wave form of Surge isolation

Ex.) Blocking the general surge of SPD

# Operating principle of SPD

The purpose of installing SPD (Surge Protective Device) is that when the surge current comes into the system due to any reasons, it is devised to have the current flow through itself instead of flowing through the load so that the abrupt elevation of the voltage drop occurring from the load is blocked to protect the load.
When the surge comes into the system, it can be achieved by letting the surge current flow through the passage (SPD) with low impedance.
MOV is the part with very large impedance in the normal state.
With the voltage surge, the impedance of MOV is greatly reduced, and it becomes the passage with low impedance having the surge flow through another passage that is not the load.
The flow of a huge voltage through SPD doesn't make voltage go up sharply.

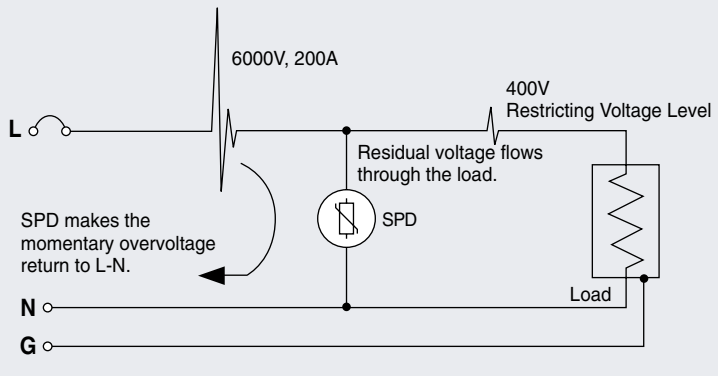


The conceptual diagram of the surge restriction of SPD

# Surge Protective Device (BKS, SP series)

MOV is the most reliable technology out of the technologies attenuating the surge voltage. The clamping characteristics of MOV are reliable so that 96% or more SPD for power is selecting MOV. SAD (Silicon Avalanche Diode) is often used as the SPD for the data line or communication line. Major features of MOV are as follows.

- It is devised to have the current rarely flow in the normal voltage.
- It is devised to have the current flow a lot in the high voltage.
  ➞ The voltage drop doesn't go up even though a lot of current flows.

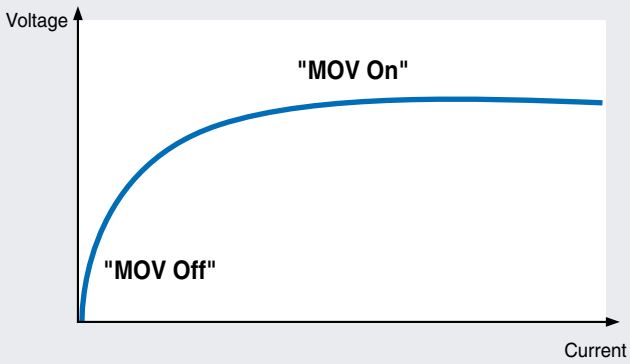


Voltage and current characteristics curve of SPD m

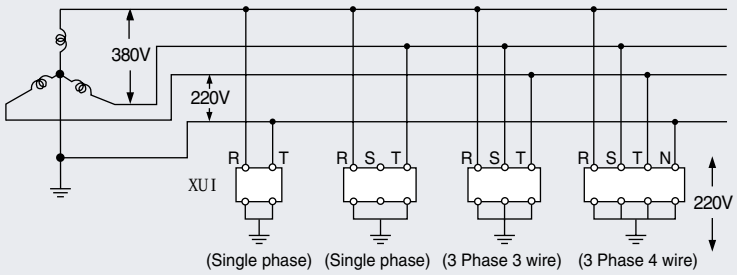


* The applied voltage is 380V between phases, but as SPD sets the ground, it becomes 220V based on the ground potential. SPD should be selected and installed in consideration of Maximum continuous operating voltage (MCOV) and the voltage protection level (Up).

# Protection of power facilities



## 1st Protection

The surge penetrating from the outside is restricted by installing the surge protector on the ACB 2nd side of the low voltage distribution panel.



## 2nd Protection

The surge protector is installed in the distribution board of each building or in the input terminal of UPS or AVR to restrict the residual surge and the surge occurring internally.



## 3rd Protection

The surge protector is installed in the power input terminal of precision control equipment to minimize the damage to the load.

# Applying APD on the basis of facility configuration

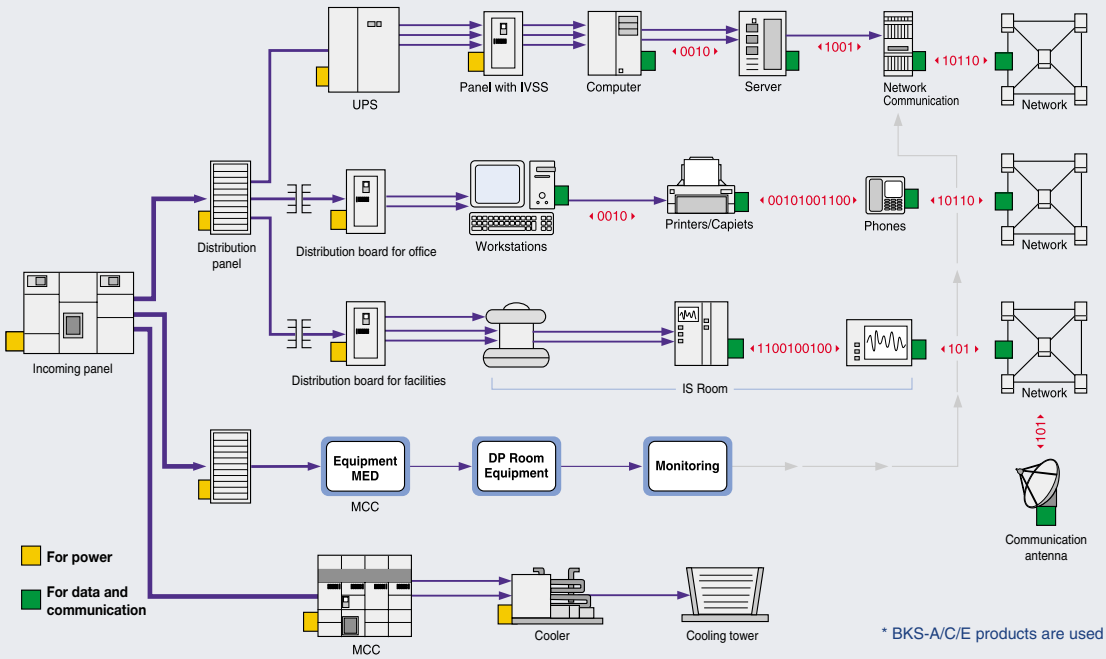

## Types of Surge Protective Devices

**Surge protective devices are classified into the voltage switching type and the voltage restricting type depending on the features.**

### Voltage switching type SPD

1) Features of the discharge type SPD
   If the surge exceeding the discharge start voltage of SPD comes in, the discharge momentarily occurs for 1 cycle to 2 cycles, and it is in the short circuit during discharge so that the rapid current flows through SPD with the momentary voltage drop accompanied.
2) Configuration of elements
   Discharge elements such as gas tube elements and air gap elements are used for the discharge type SPD.
3) Operating principle
   It is in the open state below the discharge start voltage and is in the conduction state of the momentary short circuit for the voltage exceeding the discharge start voltage. The conduction state continues for about 2 cycles at maximum, and it automatically returns to the open state if the surge is removed.

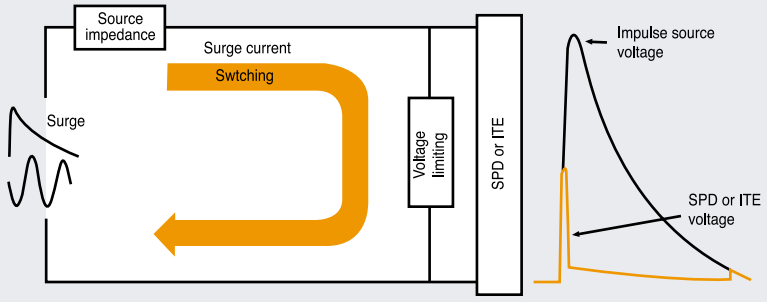


### Voltage clamping type SPD

1) Features of the voltage clamping type SPD
   The voltage restricting type SPD is the type limiting the voltage only to the specific level differently from the discharge type. The limiting voltage is called clamping voltage or suppression voltage, and the restricting voltage is determined by the correlation between the line impedance and the lightning rod impedance.
2) Configuration of elements
   MOV (Metal Oxide Varistor), semiconductor diodes, and sidactors with the nonlinear voltage and current characteristics are used as elements.
3) Operating principle
   It has the very low impedance for the voltage exceeding the operating voltage and the very high impedance below the operating voltage so that the voltage is restricted for operation by the correlation between the line impedance and the Surge Protective Device (SPD) impedance.

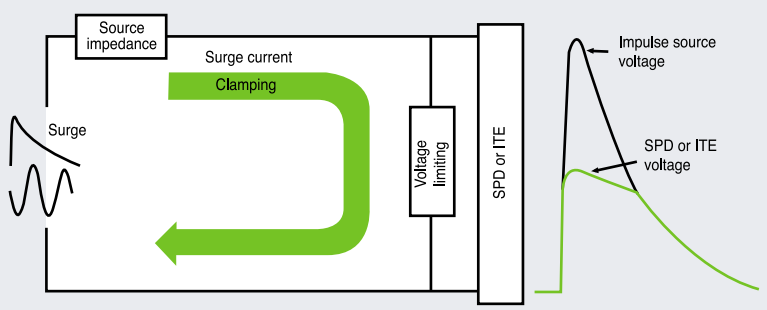

**Surge protective devices are classified into the box type and the Din-rail type.**

## Box type SPD

The box type SPD is the all-in-one product configured with the steel incoming box including the disconnectable device and the maintenance function option circuit with protection modules.

- It is possible to selectively add the following optional functions needed for maintenance.
  - Embedded degradation diagnosis function
  - Embedded surge counter
  - Noise filter
  - Remote state transmission function
- It is possible to select the protection mode and manufacture the large SPD.
- The safe environment is provided with the all-in-one structure of all components during the operation and maintenance.
- **It is possible to configure with the protection module, disconnectable device (fuse), and maintenance function (option).**




## Din-rail type SPD

Din-rail type SPD is the protection element replacement type product manufactured as the plug-in type with the protection
element inserted into the inflammable resin case.

- It consists of individual protection module combination.
- It is the plug-in type with the replacement for each protection element possible.
- The convenient maintenance environment is provided by providing the mechanical contact.
- **It is the convenient protection element replacement type. Only the basic options (protection modules) are provided so that separate components have to be combined suitably to the site conditions during installation.**

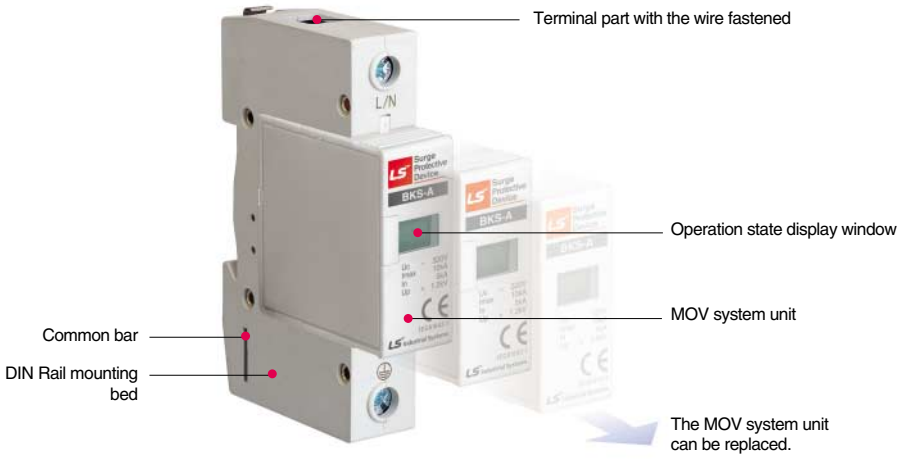

## Characteristics for Each Application Element of SPD



### Metal Oxide Varistor (MOV)

- MOV has the property with the resistance value remarkably changing depending on the voltage.
- The insulation state (high impedance) is maintained up to the insulation destruction voltage set in the normal state, but if the surge voltage exceeding the maximum permitted voltage comes in, impedance is degraded so that the path through which the surge current flows is provided.

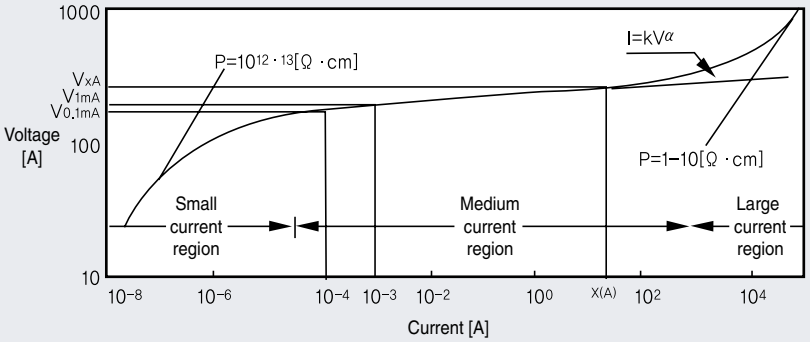


V-1 Characteristics of the Metal Oxide Varistor (MOV)

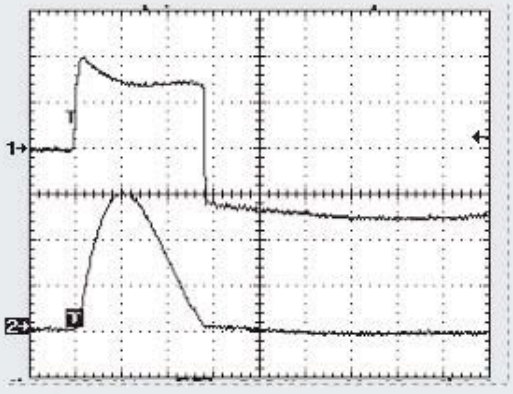

Operating characteristics of MOV

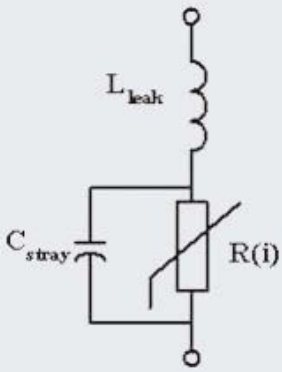


MOV equivalent circuit

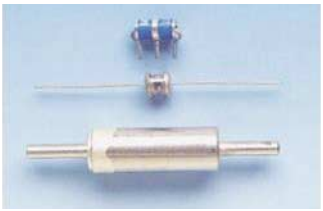

## Gas gap

- It is various up to 1,000V. The discharge withstand current rating is high so that it may be needed to have the surge current with up to 300,000A flow.
- It has the characteristics of slow response speed and dynamic current so that it is used for a special case now.
- It has the advantages that it is operated with the discharge voltage permitted and that there is little leaked current during the normal time so that it is used in combination with another element if the high speed information processing is needed in the communication system.

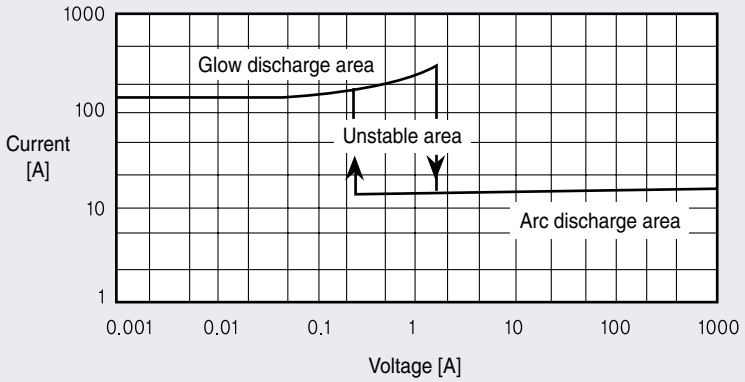


V-1 Characteristics of the discharge tube

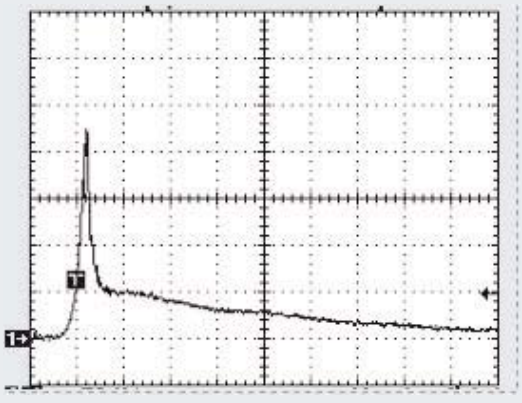

Operating characteristics of the discharge tube

## Characteristics for each application element of SPD

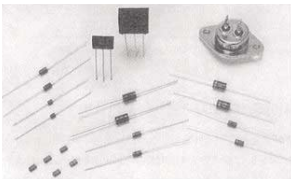

### Silicon Restriction Element

- Zener diode => tunnel effect
- Avalanche diode => electronic breakdown effect
- Response Speed: Very fast (0.001~0.01 $\mu s$) compared with another element
- Features: The operating voltage is low, and the voltage of several Vs can be restricted.
- Application: It is a kind of Zener diodes, and the TVS (Transient Voltage Suppressor) element increasing the surge withstand rating is usually used.

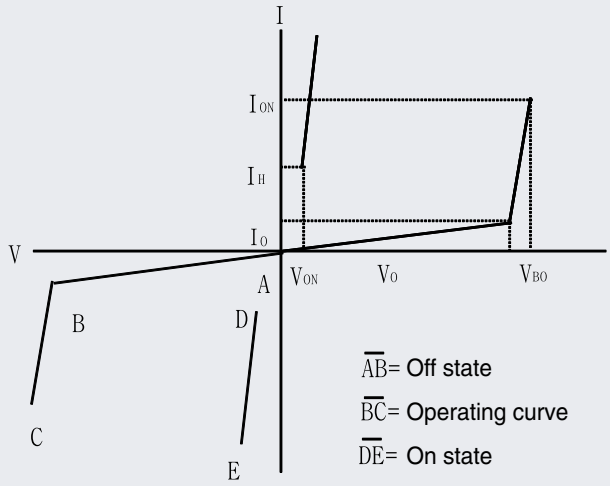


V-1 Characteristics of the silicon restriction element

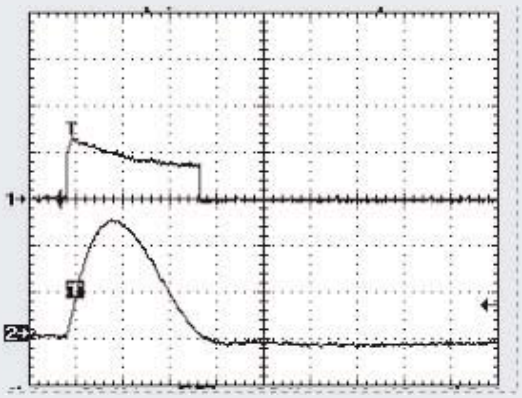

Operating characteristics of the silicon restriction element

# Response characteristics for each application element of SPD

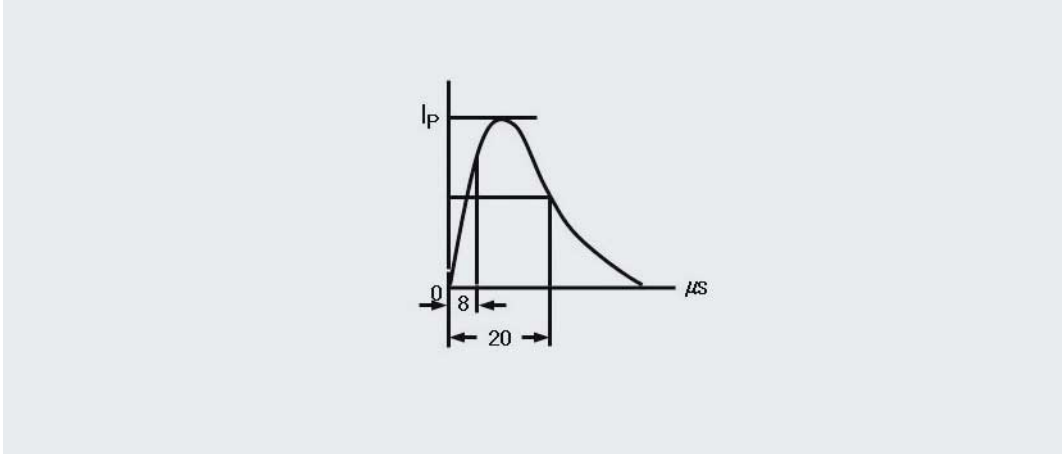


Surge current wave form

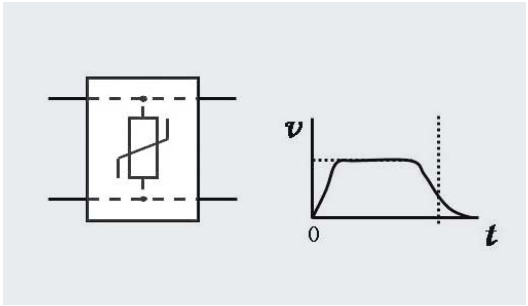


Response of the voltage restricting type SPD

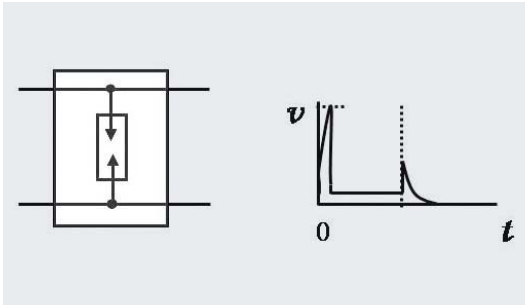


Response of the voltage switching type SPD

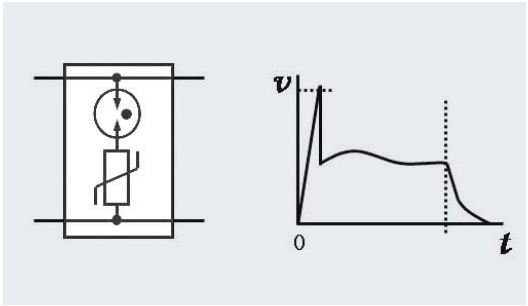


Response of the 1 port compound type SPD

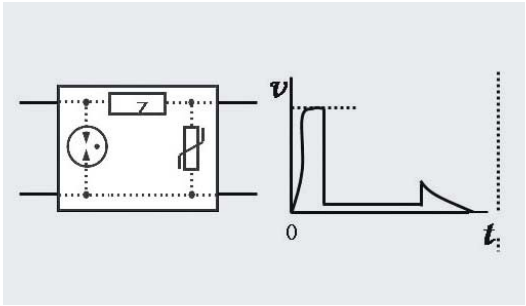


Response of the 2 port compound type SPD

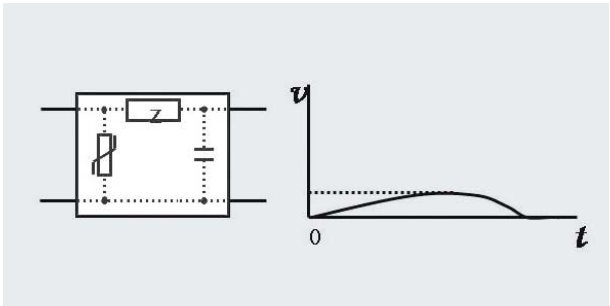


Response of the 2 port voltage switching type SPD
with the embedded

## SPD Terms

**Surge Protective Device (SPD)**
It is the device to limit the temporary overvoltage and the switching of the surge current. The device contains at least one nonlinear part.

**Continuous operating current (Ic)**
It is the current flowing through each protection mode of SPD when the maximum continuous operating current 0 is applied to each mode.

**Maximum continuous operating voltage (Uc, MCOV)**
It is equivalent to the maximum effective value or the direct current voltage and Rated system voltage steadily applied to the protection mode of SPD.

**Voltage protection level (Up)**
It is the parameter representing the performance characteristics of SPD limiting the terminal crossing voltage selected in the preferred value list. The value is greater than the highest value of the measured limiting voltage.

**Measured limiting voltage**
It is the maximum size of the voltage measured by crossing the SPD terminal when the impulse with the specific wave form and amplitude is applied.

**Residual voltage (Ures)**
It is the peak value of the voltage appearing between SPD terminals due to the passage of the discharge current.

**Temporary overvoltage (Ut)**
It is the maximum effective value or direct current voltage at which the protection device can withstand the voltage and which exceeds the Maximum continuous operating voltage (Uc).

**Temporary overvoltage of the network (Utov)**
The power frequency overvoltage, TOV, generated in the network in the specific position relatively for a long time is generated due to the internal defect of the LV system (Utov) or HV system (Utov).

**Nominal discharge current (In)**
It is the crest value of the current through SPD with the 8/20 $\mu$S current wave form.
It is used for class II SPD classification, class I and II test, and prior control of SPD.

**Impulse current (Iimp)**
It is the current peak value (I peak) and charge (Q) tested according to the test sequence of the operating test and is used for class I SPD classification.

**Combination wave**
It is generated in the generation device applying the 1.25/50 voltage impulse crossing the open circuit and the 8/20 current impulse in the short circuit. The voltage, current amplitude, and wave form delivered to SPD are defined with the generation device and with the impedance of SPD selecting surge.

**8/20 current impulse**
It is the current impulse with the 8 $\mu$S virtual wave front time and the 20 $\mu$S half value reaching time.

**1.2/50 voltage impulse**
It is the voltage impulse with the 1.2 $\mu$S virtual wave front time (the elevation time from 10% of the peak value to 90%) and with the 50 $\mu$S half value reaching time.

**Thermal runaway**
It is the operating condition inducing the accumulated elevation and exceeding the dissipation capacity of the container and access at the temperature at which the supply power dissipation of SPD leads to the malfunction of the internal element.

**Thermal stability**
If the SPD temperature is decreased as voltage is increased at the conditions of specific Maximum continuous operating voltage and of specific temperature conditions after the operating test increasing the temperature, SPD is stable to the heat.

**SPD disconnector**
It is the device blocking the SPD in the system in case of SPD malfunction.
It is installed to prevent the steady malfunction occurring in the system and visibly make an order for the SPD malfunction.

# Selection of SPD

SPD is selected by analyzing the risk level of the overvoltage and overcurrent due to the power line, thunder discharge, and ground power elevation and by considering the economic conditions. SPD with proper performance is selected through the sequential review according to the flow chart on the selection procedure presented in the following diagram.

## Selection procedure

**Maximum continuous operating voltage of SPD**
**Temporary overvoltage, rated system current, and maximum current**

The Maximum continuous operating voltage and temporary overvoltage of SPD should be higher than the maximum operating voltage and temporary overvoltage.

**Protection distance (Installation place of SPD)**

**Forecasted lifetime of the failure mode**

**Relationship between SPD and another device**

**Selection of the voltage protection level**

- Surge rating of the device to be protected
- SPD used in the nominal voltage line of the system

**Normal state**

- Does the leaked current affect the human body?
- Does it break down another device?

**Failure state**

Does SPD affect another element such as a circuit disconnecting device?

**Surge protection cooperation between SPD and the overcurrent protection device**

- Does the overvoltage protection device operate in the rated system current?
- Is it permitted for the overcurrent protection device operate in the maximum current without failure?

## Considerations when selecting SPD

**The following matters should be considered when selecting and applying SPD.**

**Normal state**

1. Installed in the location as close as possible from the facility to be protected Installed as closely as possible from the device or disconnector. The length of the conductor contacting SPD should be as short as possible.
2. Should be close to the SPD or device in the facility entrance.

**Selection of the class based on the SPD installation place**

- Class Ⅰ: The place with the serious thunderstroke damage where the thunderstroke current is partially dissipated
- Class Ⅱ: Installing the low voltage distribution panel and industrial distribution board with light thunderstroke damage
- Class Ⅲ: Installing the in-house plug socket and household distribution board with light thunderstroke damage

**Selection of each SPD type**

The box-type SPD or Din-rail SPD should be selected in consideration of the characteristics of the device to be protected and of maintenance conditions.

- Box-type SPD: It is the all-in-one type with the protection element, surge fuse, receiving box, and additional functions. Maintenance cost is high, but it is relatively safe.
- Din-rail SPD: The protection element, surge fuse, receiving box, and additional functions should be combined. It is possible to selectively replace the protection element.

## Application based on the classification of the lightning protection Zone

### Classification of the lightning protection zone

The lightning protection zone (LPZ) should be spatially categorized, and the measure corresponding to the equipment history inside the individual space should be taken. The level of thunder threat to the structure defined in KSC IEC 62305-1 is represented by categorizing it into the external area such as LPZ0 and the internal areas such as LPZ 1, 2,..n. * KSC IEC62305-4

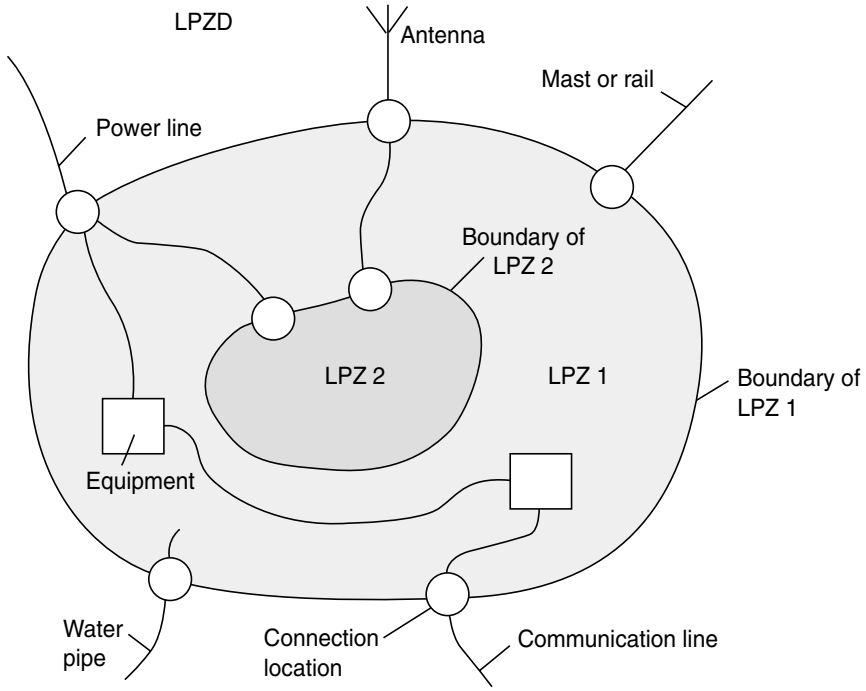


◯ Accessing the service facility directly or with the proper SPD

- LPZ 0A Area: It is the region with the threat of the thunder by the direct strike and of the lightning electromagnetic field. The whole or part of the thunder surge current tends to flow through the internal system.
- LPZ 0B Area: It is protected from the thunderstroke by the direct stroke of the lightning rod but is the region with the threat of the whole lightning electromagnetic field. The part of the lightning surge current tends to flow through the internal system.
- LPZ 1 Area: It is the region where the surge current is limited by the current classification in the boundary area or by the class I SPD. Space blocking is used to weaken the electromagnetic field caused by the thunderstroke.
- LPZ 2,...,n Areas: They are the regions where the surge current is limited more by the current classification by the class ii or III SPD of the boundary area. Additional space blocking is used to weaken the generation of the electromagnetic field further.

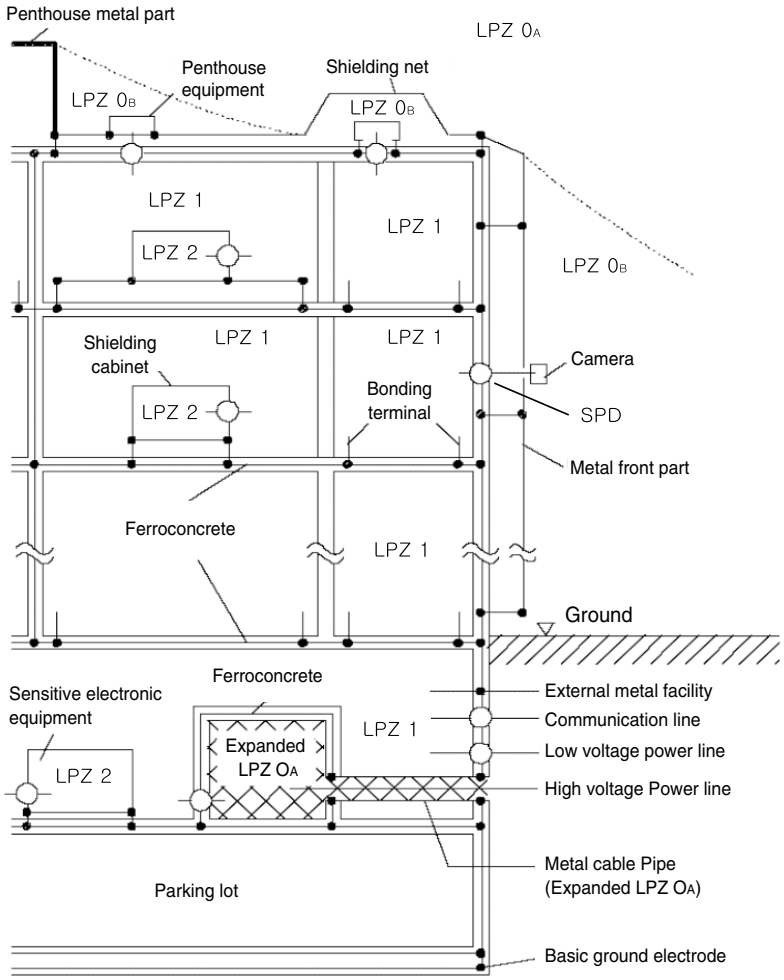


The area with the different strength of LEMP, the lightning prevention area, is determined for the electromagnetic field generated by LEMP not to have the failure occur in the facility or electronic or electrical device inside the building, and the potential is equalized by correctly connecting the metal thing, power line, communication line, and water pipe with the common ground in the boundary part of the lightning prevention area not to have the abnormal voltage generated inside the lightning prevention area. The separation of the external area (LPZ 0) from the internal area (LPZ 1) is clear, but the separation of the other lightning prevention areas is not clearly specified. The specific examples of the facilities inside the lightning prevention area are in the following table.

| Lightning prevention area | Examples of specific target facilities |
|---|---|
| LPZ $0_A$ | Facilities outside the lightning rod protection range except for the outside lights (street lights and security lights). |
| LPZ $0_B$ | Facilities inside the lightning rod protection range out of outside facilities such as penthouse receiving (cubicle) facility, air conditioning outside device, airline failure light, and antenna. |
| LPZ 1 | Facilities in the Inlet Part inside the Building: Receiving and transforming facilities, MDF, and weak electricity terminal box. |
| LPZ 2 | Individual shielding area inside the building such as trunk line distribution board, common facility control panel, IS room, and disaster prevention room. |

Note) LEMP: It is the thunder electromagnetic pulse. Out of the electromagnetic pulses (EMP), LEMP is the one caused by lightning, and NEMP is the one caused by nuclear explosion.

## Application based on the classification of the lightning protection Zone

### Cooperation for protection for each stage with SPD

1) Measure to protect the internal system from surge Installing the cooperative SPD for all power and signal line (SPD with the protection voltage, location, and capacity well selected to minimize the system failure)

2) Lightning protection zone with multiple LPZs Installing SPD (Ex.: SPD I in LPZ1 and SPD II in LPZ2) corresponding to each LPZ to the inlet

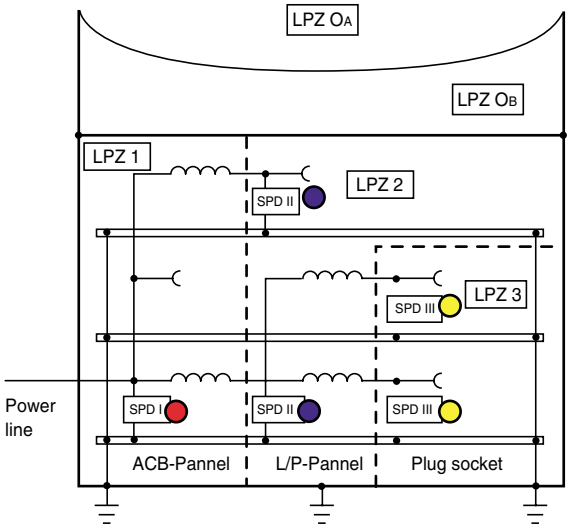


Example of the SPD application of the power

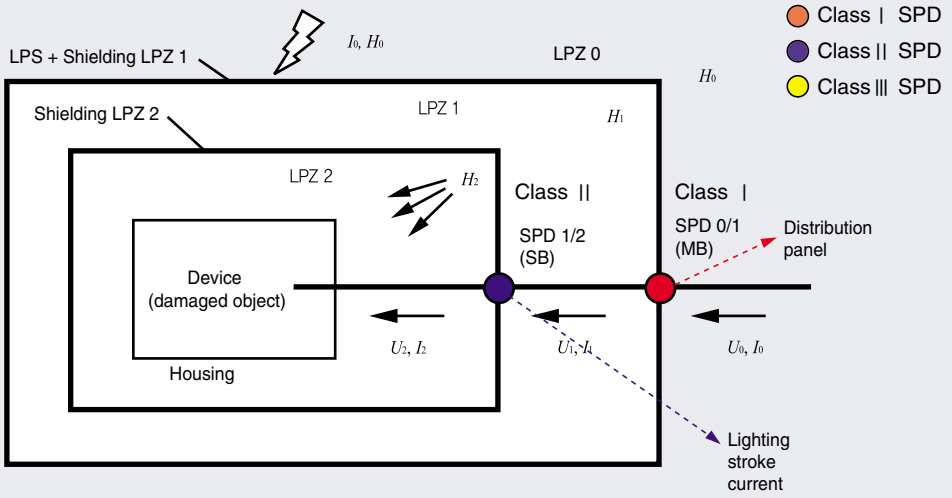


**LPMS using the protection of the SPD cooperative with the space shielding object**
-The device protected well from the conductive surge and from the radiating magnetic field-

1. SPD can be installed in the following point.
   - Boundary of LPZ 1 (Ex.: Main distribution panel MB / ACB-Panel) ----> Class I SPD
   - Boundary of LPZ 2 (Ex.: 2nd distribution panel SB / P-Panel) ----> Class II SPD
   - Equipment or the neighborhood of equipment (Ex.: Plug socket SA) ----> Class III SPD

Note) LPMS means the protection system for LEMP. * LEMP protection measures system

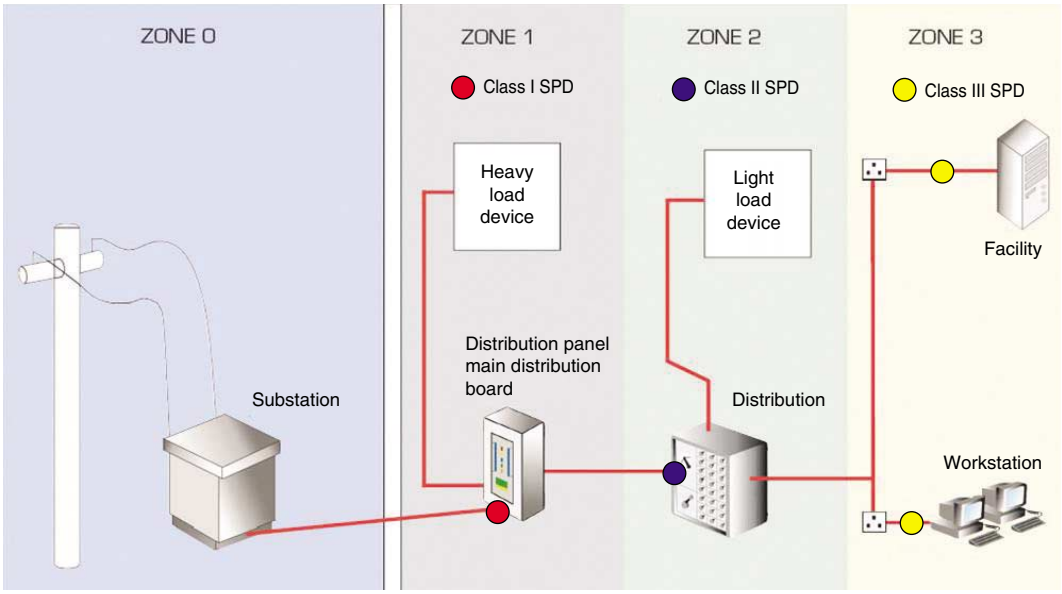


Note) If the heavy load device or light load device is 20m or farther from the SPD installation position in the unshielded vertical wiring distance, the additional protection should be considered.

## Model recommended for application

| | | | |
|---|---|---|---|
| SPL-110S 20kA | × | × | ● |
| SPL-220S 40kA | × | ● | ● |
| SPL-220S 80kA | × | ● | ● |
| SPY-220S 40kA | × | ● | ● |
| SPY-220S 80kA | × | ● | ● |
| SPT-380S 40kA | × | ● | ● |
| SPT-440S 40kA | × | ● | ● |
| SPT-380S 80kA | × | ● | ● |
| SPY-220S 120kA | ● | ● | ● |
| SPY-220S 160kA | ● | ● | ● |
| SPY-220S 200kA | ● | ● | ● |
| SPY-220S 240kA | ● | ● | ● |
| SPT-380S 120kA | ● | ● | ● |
| SPT-380S 160kA | ● | ● | ● |
| BKS-A | × | × | ● |
| BKS-B | × | × | ● |
| BKS-C | × | ● | × |
| BKS-D | × | ● | × |
| BKS-E | × | ● | × |
| BKS-G | × | ● | × |
| BKS-M | × | ● | × |

## Standard to select the SPD for each LPZ

LPZ 1 - The class I SPD with the impulse current with limp 15kA ~ 60kA on the basis of the 10/350 $\mu s$ wave form is applied.

LPZ 2 - The class II SPD with the maximum discharge current with limp 40kA ~ 160kA on the basis of the 8/20 $\mu s$ wave form is applied.

LPZ 3 - The class III SPD on the basis of the 1.2/50 $\mu s$ and 8/20 $\mu s$ combination wave form is applied.

## Considerations during installation

**SPD shows the difference in performance depending on the installation method.**

**Therefore, SPD is installed in consideration of the following matters.**

1) Protection and installation method

If SPD with sufficient surge rating is installed in the location close to the entrance of the distribution board for various wiring systems when the device or facility to be protected has sufficient overvoltage rating, most facilities can be protected.

2) Shuttle vibration phenomenon

If the device or facility to be protected is distant from SPD, the voltage that is about 2 times higher than the SPD limiting voltage is generated in the facility to be protected by the shuttle vibration of the incidence surge. The shuttle vibration of surge can be disregarded in case of the 10m or shorter wiring length, but the twofold or higher voltage can be generated in case of the 10m or shorter length so that the cooperation between the protection element inside the device or facility to be protected and SPD should be well accomplished.

3) Length of the connection line

In order to most effectively protect the overvoltage, it is necessary to shorten the length of the connection line for SPD wiring and to apply the wiring method restricting the induced voltage of the inductance of the connection line.

4) Necessity for additional protection

If the lightning surge voltage flowing into the device or facility to be protected is comparatively low, the protection effect is sufficient with the SPD installed in the building entrance. However, if the electromagnetic field is generated inside the building due to the lightning discharge and the very precise and sensitive facility such as computer or the facility to be protected is far from the SPD installed in the entrance, the additional protection device needs to be installed.

5) Selection of the SPD installation place based on the class test

It is very important to select the SPD with a suitable specification in consideration of the overvoltage generated in the lightning surge voltage or low voltage wiring system.

6) Concept of the protection area

Regarding the design or application of the proper surge protection, it is the most desirable that the protection area is classified into layers on the basis of the concept of protection area prescribed in IEC and that in case of installing SPD by segmenting the wiring system, SPD is installed in the boundary of the protection area.

# Considerations during installation

## SPL-110S type

- Disconnecting the breaker power before installation
- Measuring the ground resistance (10 Ω or lower recommended)
- Mounting and fixing the SPL-110 series (using the M4 screw)
- Connecting the wire (green line) on the ground side to the ground booth bar
- Connecting the residual wires (L and N) to the secondary terminal of the breaker
- Connecting the L line (black line) to the secondary 110V L phase terminal of the breaker
- Connecting the N line (white line) to the secondary N phase terminal of the breaker
- Putting power into the breaker
- Checking the LED state (Power On)

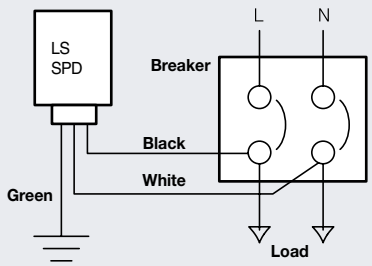


※ Caution: The SPD wire is cut very shortly to maintain the mounting location and the shortest distance with the breaker connection terminal.

| Wire color | Connection location | Recommended wire size used (Unit: mm²) | Wire type |
|---|---|---|---|
| | | 20kA | |
| Black | Connected to the MCCB R phase secondary terminal | 4 | HKIV |
| White | Connected to the MCCB neutral secondary terminal | | |
| Green | Connected the grounding bar | | |

※The wire used should be purchased separately.

## SPL-220S type

- Disconnecting the breaker power before installation
- Measuring the ground resistance (10 Ω or lower recommended)
- Mounting and fixing the SPL-220S series (using the M4 screw)
- Connecting the wire (green line) on the ground side to the ground booth bar
- Connecting the residual wires (L and N) to the secondary terminal of the breaker
- Connecting the L line (black line) to the MCCB secondary 220V L phase terminal of the breaker
- Connecting the N line (white line) to the MCCB secondary N phase terminal of the breaker
- Putting power into the breaker
- Checking the LED state (Power On/ Alarm Off)

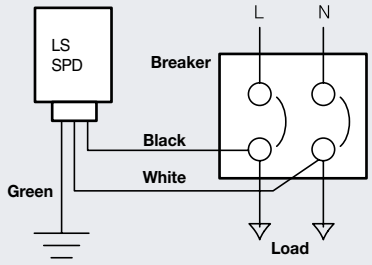


※ Caution: The SPD wire is cut very shortly to maintain the mounting location and the shortest distance with the breaker connection terminal.

| Wire color | Connection location | Recommended wire size used (Unit: mm²) | | Wire type |
|---|---|---|---|---|
| | | 40kA | 80kA | |
| Black | Connected to the MCCB R phase secondary terminal | 4 | 6 | HKIV |
| White | Connected to the MCCB neutral secondary terminal | | | |
| Green | Connected the grounding bar | | | |

※The wire used should be purchased separately.

## Considerations during installation

### SPY-220S type

- Disconnecting the breaker power before installation
- Measuring the ground resistance (10 Ω or lower recommended)
- Mounting and fixing the SPD (using the M4 screw)
- Connecting the wire (green line) on the ground side to the ground booth bar
- Connecting the residual wires (L1, L2, L3, and N) to the secondary terminal of the breaker
- Refer to the figure on the right.
- Putting power into the breaker
- Checking the LED state (Power On/ Alarm Off)

※ Caution: The SPY-220S series are cut very shortly to maintain the mounting location and the shortest distance with the breaker connection terminal.

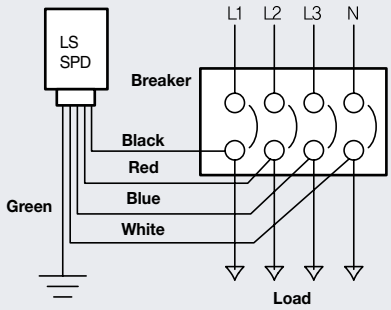


| Wire color | Connection location | Recommended wire size used (Unit: mm²) | | | | Wire type |
|---|---|---|---|---|---|---|
| | | 40kA | 80kA | 120kA | 160kA | |
| Black | Connected to the MCCB L1 phase secondary terminal | 6 | 10 | 10 | 10 | HKIV |
| Red | Connected to the MCCB L2 phase secondary terminal | | | | | |
| Blue | Connected to the MCCB L3 phase secondary terminal | | | | | |
| White | Connected to the MCCB neutral secondary terminal | | | | | |
| Green | Connected the grounding bar | | | | | |

### SPT-380S type

- Measuring the ground resistance (10 Ω or lower recommended)
- Mounting and fixing the SPD (using the M4 screw)
- Connecting the wire (green line) on the ground side to the ground booth bar
- Connecting the residual wires (L1, L2, and L3) to the secondary terminal of the breaker
- Refer to the figure on the right.
- Putting power into the breaker
- Checking the LED state (Power On/ Alarm Off)

※ Caution: The SPT-380S series are cut very shortly to maintain the mounting location and the shortest distance with the breaker connection terminal.

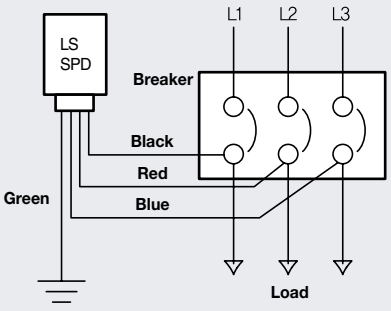


| Wire color | Connection location | Recommended wire size used (Unit: mm²) | | | | Wire type |
|---|---|---|---|---|---|---|
| | | 40kA | 80kA | 120kA | 160kA | |
| Black | Connected to the MCCB L1 phase secondary terminal | 6 | 10 | 10 | 10 | HKIV |
| Red | Connected to the MCCB L2 phase secondary terminal | | | | | |
| Blue | Connected to the MCCB L3 phase secondary terminal | | | | | |
| Green | Connected the grounding bar | | | | | |

# Caution during installation

**Be sure to read the user manual and safety instructions before using the product.**
**Please deliver the user manual to the end user or person in charge of maintenance.**

## ⚠ Caution for safety

Correctly use it after thoroughly reading the caution for safety and the danger before handling, wiring, manipulation, repair, and checking. It is the important details on safety so that be sure to observe them.

⚠ **Danger: Infringing the instructions results in death or serious injury.**

⚠ **Caution: Infringing the instructions results in light injury or physical damage.**

## ⚠ Danger

1. Be sure to turn off the upper breaker before installing the product. There is the danger of electric shock during installation.
2. Be careful not to contact the open part of the terminal. It can cause the accident of electric shock or short circuit.
3. Be sure not to make the part of the body contact the two exposed hot-lines at the same time. It may cause the electric shock.

## ⚠ Caution

1. Be sure to read the caution before installing the product and install according to instructions.
2. There is the danger of malfunction or accident occurrence due to incorrect installation. The qualified person (electric engineer) should install and repair the surge protective device.
3. Please avoid installation in the environment of rain, oil, dust, and direct light.
   There is the danger of electric shock, leak, short circuit, fire, and malfunction.
   1) Operating Temperature: -40~70℃
   2) Relative Humidity: 45~85%
   3) Altitude: 2000m or lower
   4) There should be no abnormal vibration and shock, excessive vapor, oil, smoke, dust, corrosive gas, and flammable gas.
4. Please connect it to the power with right Product rating. Improper rating causes malfunction or failure.
5. As the insufficient fastening torque of a terminal causes overheat or fire, please refer to the fastening torque specified in the user manual for each product to correctly fix the terminal.
   * As for the details, refer to the mounting method for each device type.
6. Install the connection conductor and each phase in parallel when mounting a terminal. There is the danger of the short circuit accident between phases.
7. The insulation resistance measurement and withstand voltage test between phases cannot be performed. In case of doing the above test between the lines of the circuit, do it after detaching the product from the circuit. It may cause a failure.
8. Be sure to ground the earth terminal of an electric device.
9. Electric shock or fire can occur.
10. Do not perform the unauthorized modification.
11. Please handle the disposal of products according to the Waste Management Law.

# Memo

*Green Innovators of Innovation*



Safety Instructions

- For your safety, please read user's manual thoroughly before operating.
- Contact the nearest authorized service facility for examination, repair, or adjustment.
- Please contact a qualified service technician when you need maintenance.
  Do not disassemble or repair by yourself!
- Any maintenance and inspection shall be performed by the personnel having expertise concerned.

## LSIS Co., Ltd.

© 2010.4 LSIS Co.,Ltd. All rights reserved.

**www.lsis.biz**


### HEAD OFFICE

LS-ro 127 (Hogye-dong) dongan-gu Anyang-si
Gyeonggi-do Korea
Tel. (82-2)2034-4887, 4873, 4148
Fax. (82-2)2034-4648

### CHEONG-JU PLANT

Cheong-Ju Plant #1, Song Jung Dong, Hung Duk Ku,
Cheong Ju, 361-720, Korea


Specifications in this catalog are subject to change without notice due to continuous product development and improvement.

### Global Network


- **LSIS (Middle East) FZE** ›› **Dubai, U.A.E.**
  Address: LOB 19 JAFZA VIEW TOWER Room 205, Jebel Ali Freezone P.O. Box 114216, Dubai, United Arab Emirates
  Tel: 971-4-886 5360 Fax: 971-4-886-5361 e-mail: dhleef@lsis.biz
- **Dalian LSIS Co., Ltd.** ›› **Dalian, China**
  Address: No.15, Liaohexi 3-Road, Economic and Technical Development zone, Dalian 116600, China
  Tel: 86-411-8273-7777 Fax: 86-411-8730-7560 e-mail: tangyh@lsis.com.cn
- **LSIS (Wuxi) Co., Ltd.** ›› **Wuxi, China**
  Address: 102-A , National High & New Tech Industrial Development Area, Wuxi, Jiangsu, 214028, P.R.China
  Tel: 86-510-8534-6666 Fax: 86-510-522-4078 e-mail: luw@lsis.com.cn
- **LSIS-VINA Co., Ltd.** ›› **Hanoi, Vietnam**
  Address: Nguyen Khe - Dong Anh - Ha Noi - Viet Nam
  Tel: 84-4-882-0222 Fax: 84-4-882-0220 e-mail: sjbaik@lsis.biz
- **LSIS-VINA Co., Ltd.** ›› **Hochiminh , Vietnam**
  Address: 41 Nguyen Thi Minh Khai Str. Yoco Bldg 4th Floor, Hochiminh City, Vietnam
  Tel: 84-8-3822-7941 Fax: 84-8-3822-7942 e-mail: hjchoid@lsis.biz
- **LSIS Shanghai Office** ›› **Shanghai, China**
  Address: Room 32 floors of the Great Wall Building, No. 3000 North Zhongshan Road, Putuo District, Shanghai, China
  Tel: 86-21-5237-9977 Fax: 89-21-5237-7189 e-mail: baijh@lsis.com.cn
- **LSIS Beijing Office** ›› **Beijing, China**
  Address: B-Tower 17FL.Beijing Global Trade Center B/D. No.36, BeiSanHuanDong-Lu, DongCheng-District, Beijing 100013, P.R. China
  Tel: 86-10-5825-6025,7 Fax: 86-10-5825-6026 e-mail: sunmj@lsis.com.cn
- **LSIS Guangzhou Office** ›› **Guangzhou, China**
  Address: Room 1403, 14/F, New Poly Tower, No.2 Zhongshan Liu Road, Guangzhou 510180, P.R. China
  Tel: 020-8326-6754 Fax: 020-8326-6287 e-mail: chenxs@lsis.com.cn
- **LSIS Chengdu Office** ›› **Chengdu, China**
  Address: Room 1701 17Floor, huamin hanjun internationnal Building, No1 Fuxing Road Chengdu, 610016, P.R. China
  Tel: 86-28-8670-3201 Fax: 86-28-8670-3203 e-mail: yangcf@lsis.com.cn
- **LSIS Qingdao Office** ›› **Qingdao, China**
  Address: Room 2001,20/F,7B40, Galaxy Building, No.29 Shandong Road, Shinan District, Qingdao 266071, P.R. China
  Tel: 86-532-8501-6058 Fax: 86-532-8501-6057 e-mail: wangzy@lsis.com.cn
- **LSIS NETHERLANDS Co.Ltd** ›› **Schiphol-Rijk, Netherlands**
  Address: 1st. Floor, Tupolevlaan 48, 1119NZ,Schiphol-Rijk, The Netherlands
  Tel: 31-20-654-1420 Fax: 31-20-654-1429 e-mail: junshickp@lsis.biz
- **LSIS Gurgaon Office** ›› **Gurgaon ,India**
  Address: 109 First Floor, Park Central, Sector-30, Gurgaon- 122 002, Haryana, India e-mail: hwyim@lsis.biz



**2012. 10**

Surge Protective Device(E) 2010. 04 /(03) 2012. 10 Printed in Korea STAFF