KRENDL™

The Innovator in Insulation Equipment



OWNERS MANUAL

MODEL #KS260

QUALITY · RELIABILITY · DURABILITY · SERVICE · KRENDL Performance

60 YEARS OF AMERICAN INGENUITY

KRENDL MACHINE COMPANY • 1201 SPENCERVILLE RD
DELPHOS, OHIO 45833 • TELEPHONE 800-459-2069 • FAX 419-695-9301
E - MAIL: krendl@krendlmachine.com • WEB SITE: www.krendlmachine.com

CONGRATULATIONS ON YOUR PURCHASE OF KRENDL EQUIPMENT

MODEL #KS260
OWNER'S MANUAL

FOR ASSURED SAFETY AND CONFIDENCE, PLEASE READ THIS MANUAL CAREFULLY BEFORE INSTALLING AND OPERATING YOUR MACHINE.

E-MAIL ADDRESS IS: krendl@krendlmachine.com
WEB SITE IS: www.krendlmachine.com

Table of Contents

Preface 1
General Safety Information 1
Decals 4
Returned Goods Procedure 8
Warranty 9
Introduction 10
Dry Unit 11
Recycle Unit 12
Blower 12
Vacuum 13
Filter System 13
Water Tank System 13
Generator Set 14
Power Take Off 15
Control Panel Module 15
Main Power Panel Box 15
System Operating Controls 16
Panel Outlets 18
Remote Control Units 19
Operating Instructions 19
Hoses 19
Settings for Wall Spraying 20
Settings for Attic Blowing 20
Attic Nozzle Assembly 21
Mechanical Settings 22
Trouble Shooting 23
Maintenance 25
Electrical Schematics 31
Electrical Lid 31
Electrical Box 32
Pump Cabinet Electrical 33
Exploded Parts List 34
KS-260 Assembly 34
Water Pump Assembly 42
Water Tank Hose Reel 43
Pump Cabinet 44
John Deer Generator 47
PTO 49
Hose Reel 50
Electrical Box 52

Preface

Thank you for purchasing a **KRENDL INSULATION MOVING MACHINE.** With over sixty years experience in manufacturing insulation moving equipment, we have designed and built your machine with the highest quality to provide years of reliable service.

This manual has been prepared to help you obtain the maximum efficiency and service from your Krendl equipment. The equipment is designed to condition and apply insulation with the utmost in dependable performance. Our primary objective is to build equipment which will provide complete satisfaction so that you may confidently recommend Krendl to others.

We do not manufacture or sell insulation. Our interest lies only in the proper performance of the equipment we manufacture. We make no recommendations or guarantees concerning various insulations.

CAUTION:

This manual contains important information regarding the **safe** assembly and operation of your machine. We urge you to read it carefully and follow the instructions provided. If your questions are not answered in this manual, may we hear from you? We want you to be able to operate this unit safely and confidently.

FILL IN AND RETAIN:

Krendl Machine Company
1201 Spencerville Rd
Delphos, Ohio 45833 U.S.A.

Telephone: 800-459-2069
Fax: 419-695-9301
E-mail: krendl@krendlmachine.com
Web Site: www.krendlmachine.com

For your protection in the event of theft or loss, please fill in the information requested for your own records. This information will be needed for in-warranty repairs and when ordering replacement parts. You may also want to attach a copy of your invoice.

Machine model number_____

Serial number_____

Date of purchase_____ Supplier/Distributor_____

General Safety Information

Important: Read **all** instructions **before** operating this unit. This equipment can be potentially dangerous and must be used in strict accordance with instructions.

Disclaimer Notice: The manufacturer will not be legally responsible for any injury or damage resulting from the improper use of this equipment or the failure to follow instructions.

General Safety

1. Read this manual carefully and become familiar with your machine unit. Know its applications, limitations, and any hazards involved.
2. This machine was designed and manufactured for specific applications. Do not attempt to modify the unit or use it for any application it was not designed for. If you have any questions about your intended use or the equipments suitability, ask your dealer/distributor or consult the factory. The manufacturers' could not possibly anticipate every circumstance that might involve a hazard. For that reason, warnings in the manual and warning tags or decals affixed to the unit, are **not** all-inclusive. If you intend to handle, operate, or service the unit by a procedure or method not specifically recommended by the manufacturer, first make sure that such a procedure or method will not render this equipment unsafe or pose a threat to you and others.

Electrical Safety

- The **National Electric Code** (NEC) in the United States and many international electrical codes require frame and external electrically conductive parts of this machine to be properly connected to an approved earth ground. Local electrical codes may also require proper grounding of machine. Consult with local electricians for grounding requirements in your area.
- Never handle any kind of electrical cord or device while standing in water, while barefoot or while hands or feet are wet. Dangerous electrical shock will result.
- Use a ground fault circuit interrupter (GFCI) in any damp or highly conductive area. (metal decking or steel work)
- Reference NFPA 79, 70E, or OSHA safe work practices when performing energized work procedures.

Safety/Caution

- **Be Safe** - Keep away from moving parts.
- **Be Safe** - Make sure all machine, PTO or genset guards, hopper bars, hopper extensions, and doors are in proper place **before** operating machine. Guards and safety devices/switches should not be removed, modified or by-passed. Hands should never pass between rotating parts.
- **Be Safe** - Do not remove motors or lift hopper when unit is connected to power supply.
- **Be Safe** - **Make sure motor controls and remote control hand pendant switch are in off position before connecting and turning on the power supply to the machine.**
- **Be Safe** - Make sure machine is properly grounded. Protect all electrical supply cords from sharp objects, moisture, and other potentially hazardous materials. Keep power cords in good repair. Electrical service must be performed by a qualified electrician.
- **Be Safe** - Disconnect and lockout power supply **before** inspecting or adjusting unit. Generator must be off.
- **Be Safe** - Consult a qualified technician to answer questions **before** attempting to operate, or injury may result.
- **Be Safe** - Use proper and secure clamping method for all insulation hoses to prevent uncontrolled fiber stream bursts around operator.
- **Be Safe** - Check all pressure line connections for wear and durability to avoid potential rupture in area of operator.
- **Be Safe** - **Limit Switch** - Make sure door safety switches are operating properly.
- **Be Safe** - Make sure truck is in park and engine is off before doing any maintenance to drive assembly.
- **Be Safe** - Do not remove motors or lift hopper when unit is connected to power supply.

- **Be Safe** - Do not operate machine alone.
- **Be Safe** - Do not leave machine unattended and energized.
- **Be Safe** - Turn machine off and disconnect electricity before clearing and feeding jam or attempting to remove any object dropped in the hopper.
- **Be Safe** - Keep hands, loose clothing, jewelry and hair away from agitators, gears, chains and other moving parts.
- **Be Safe** - Use proper lifting when moving insulation and loading machine.
- **Be Safe** - Keep work area clear of debris.
- **Be Safe** - Wear proper safety equipment, including protective gear, such as respirators, eye and ear protection.
- **Be Safe** - Violation of the Owner's Manual or safety precautions may void warranty.



Make Sure!

- Hopper is empty of foreign objects **before** starting.
- Adequate electrical power is supplied or damage to unit will result.
- Blower filter is kept clean and in place when blower is on.
- Blower is turned off **immediately** if hose is plugged, or blower will overheat.
- Machine must be on **before** adding insulation.
- Blower(s) must be on, when agitators are running, or machine will bind.
- Agitator motor is not run with hopper empty for more than a few minutes, or damage to seals will result.
- Sprockets, chains, belts and pulleys are correctly **aligned** and **tensioned**.
- Pieces of bag are **not** left in the machine as this can bind and stall your machine or damage airlock seals.
- This machine should only be used with good quality insulation that is dry, undamaged and that meet a certain industry specification or quality standards.
- The machine and all electrical is turned off before the generator is turned off.



Keeping the filter clean will result in longer blower life and better performances.



Manufacturer information is provided here along with machine model, and serial number.



Emergency stop button for machine.

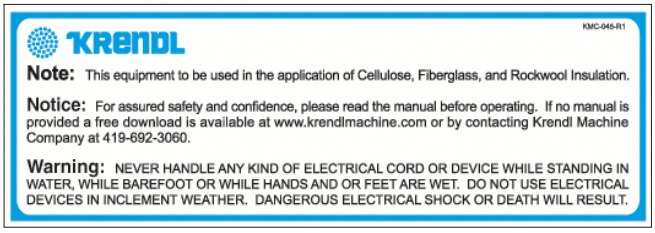

Identifies what type of insulation should be used with this machine and that the manual should be read before operating. Warns to be careful around electrical components! This can cause serious injury or death.



Rotating parts can be dangerous! You can snag clothes, skin, hair, hands, etc. This can cause serious injury or death.



Opens and closes the material feed gate which in turn controls the production.



Made in the U.S.A.



Indicates if blower is off, on, or on with agitator.

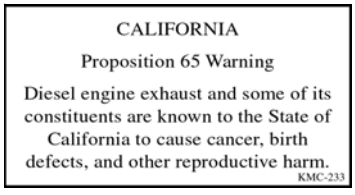

Do not breathe engine exhaust. Failure to do this could cause serious injury or death.

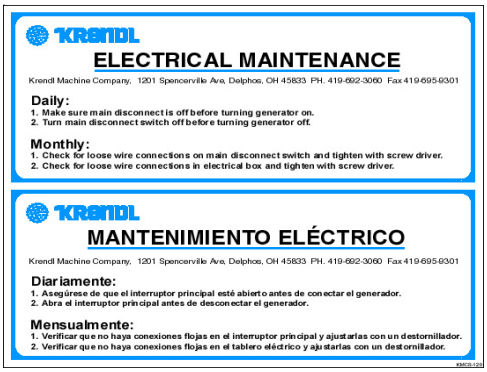

Electrical maintenance information and schedule provided here.



Indicates that this outlet is intended for only the remote control outlet. Each time machine cycle starts, an audible alarm warns the operator that the machine is about to come on.



Indicates which employee inspected equipment and on what date.



Becareful around electrical components! This can cause serious injury or death.

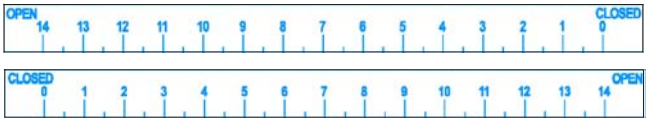

Identifies position of material feed gate.



Part number for identification and tracking.





Rotating parts will be moving in this direction.

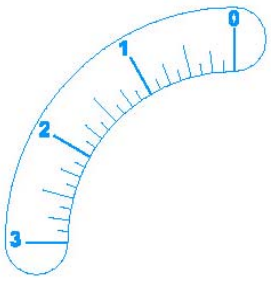

Identifies position of blower control.



Keeping the door closed will keep bystanders safe from rotating parts.



ALL FIBER MACHINES

SAFETY - CAUTION

1. **BE SAFE** - KEEP AWAY FROM MOVING PARTS.
2. **BE SAFE** - MAKE SURE ALL GUARDS AND HOPPER BARS ARE IN PROPER PLACE **BEFORE** OPERATING MACHINE. HANDS SHOULD NEVER PASS BELOW HOPPER BARS.
3. **BE SAFE** - MAKE SURE BLOWER MOTOR AND AGITATOR MOTOR SWITCHES ARE IN **OFF** POSITION BEFORE CONNECTING THE POWER SUPPLY TO THE MACHINE.
4. **BE SAFE** - MAKE SURE MACHINE IS PROPERLY GROUNDED. PROTECT POWER CABLE FROM SHARP OBJECTS, MOISTURE, AND OTHER POTENTIALLY HAZARDOUS MATERIALS. KEEP POWER CORDS IN GOOD REPAIR. ELECTRICAL SERVICE MUST BE PERFORMED BY A QUALIFIED ELECTRICIAN.
5. **BE SAFE** - DISCONNECT POWER SUPPLY **BEFORE** INSPECTION OR ADJUSTMENT TO UNIT.
6. **BE SAFE** - DO NOT REMOVE BLOWER OR HOPPER WHEN UNIT IS CONNECTED TO POWER SUPPLY.
7. **BE SAFE** - CONSULT A QUALIFIED PERSON TO ANSWER QUESTIONS **BEFORE** ATTEMPTING TO OPERATE, OR INJURY MAY RESULT.

IMPORTANT

MAKE SURE - ADEQUATE ELECTRICAL POWER IS SUPPLIED OR DAMAGE TO UNIT WILL RESULT.
MAKE SURE - BLOWER FILTER IS KEPT CLEAN AND IN PLACE WHEN BLOWER IS ON.
MAKE SURE - BLOWER IS **ON** WHILE AGITATOR IS RUNNING, OR MACHINE WILL PLUG.
MAKE SURE - BLOWER IS TURNED OFF **IMMEDIATELY** IF HOSE IS PLUGGED, OR BLOWER WILL OVERHEAT.
MAKE SURE - AGITATOR MOTOR IS ON **BEFORE** ADDING FIBER.
MAKE SURE - AGITATOR MOTOR IS **NOT** RUN WITH HOPPER EMPTY FOR MORE THAN A FEW MINUTES, OR DAMAGE TO SEALS WILL RESULT.
MAKE SURE - BELTS OR CHAINS ARE CORRECTLY ALIGNED AND TENSIONED.

TODAS LAS MÁQUINAS DE FIBRA

SEGURIDAD - PRECAUCIÓN

1. **NO CORRA RIEGOS** - MANTÉNGASE ALEJADO DE LAS PARTES EN MOVIMIENTO.
2. **NO CORRA RIEGOS** - ASEGÚRESE DE QUE TODAS LAS PROTECCIONES Y LAS BARRAS DE LA TOLVA ESTÉN EN EL LUGAR CORRECTO **ANTES** DE OPERAR LA MÁQUINA. LAS MANOS JAMÁS DEBEN PASAR POR DEBAJO DE LAS BARRAS DE LA TOLVA.
3. **NO CORRA RIEGOS** - ASEGÚRESE DE QUE LOS INTERRUPTORES DEL MOTOR DEL SOPLADOR Y DEL AGITADOR ESTÉN EN LA POSICIÓN OFF ANTES DE CONECTAR EL SUMINISTRO DE ENERGÍA A LA MÁQUINA.
4. **NO CORRA RIEGOS** - ASEGÚRESE DE QUE LA MÁQUINA ESTÉ PUESTA A TIERRA ADECUADAMENTE. PROTEJA EL CABLE DE ENERGÍA DE OBJETOS CORTANTES, HUMEDAD Y OTROS MATERIALES POTENCIALMENTE PELIGROSOS. CONSERVE LOS CABLES DE ENERGÍA EN BUENA FORMA. EL MANTENIMIENTO ELÉCTRICO DEBE ESTAR A CARGO DE UN ELECTRICISTA CALIFICADO.
5. **NO CORRA RIEGOS** - DESCONECTE EL SUMINISTRO DE ENERGÍA **ANTES** DE INSPECCIÓN O AJUSTE DE LA UNIDAD.
6. **NO CORRA RIEGOS** - NO QUITE EL SOPLADOR O LA TOLVA CUANDO LA UNIDAD ESTÁ CONECTADA AL SUMINISTRO DE ENERGÍA.
7. **NO CORRA RIEGOS** - CONSULTE SUS DUDAS A UNA PERSONA CALIFICADA **ANTES** DE INTENTAR OPERAR LA MÁQUINA O ALGUIEN PUEDE LESIONARSE.

IMPORTANTE

ASEGÚRESE DE - QUE SE SUMINISTRE LA ENERGÍA ELÉCTRICA ADECUADA O SE DAÑARÁ EL EQUIPO.
ASEGÚRESE DE - QUE EL FILTRO DEL SOPLADOR SE MANTENGA LIMPIO Y EN SU LUGAR CUANDO EL SOPLADOR ESTÉ EN FUNCIONAMIENTO.
ASEGÚRESE DE - QUE EL SOPLADOR FUNCIONE MIENTRAS EL AGITADOR ESTÁ EN MARCHA, O LA MÁQUINA SE TAPONARÁ.
ASEGÚRESE DE - QUE EL SOPLADOR SE DETENGA **INMEDIATAMENTE** SI LA MANGUERA SE TAPA O EL SOPLADOR SE RECALENTARÁ.
ASEGÚRESE DE - QUE EL MOTOR DEL AGITADOR ESTÉ FUNCIONANDO **ANTES** DE AGREGAR FIBRA.
ASEGÚRESE DE - QUE EL MOTOR DEL AGITADOR **NO** FUNCIONE CON LA TOLVA VACÍA MÁS QUE UNOS POCOS MINUTOS O SE DAÑARÁN LOS SELLOS.
ASEGÚRESE DE - QUE LAS CORREAS O CADENAS ESTÉN CORRECTAMENTE ALINEADAS Y TENSIONADAS.

General safety information intended to reduce the risk of serious injury or death.

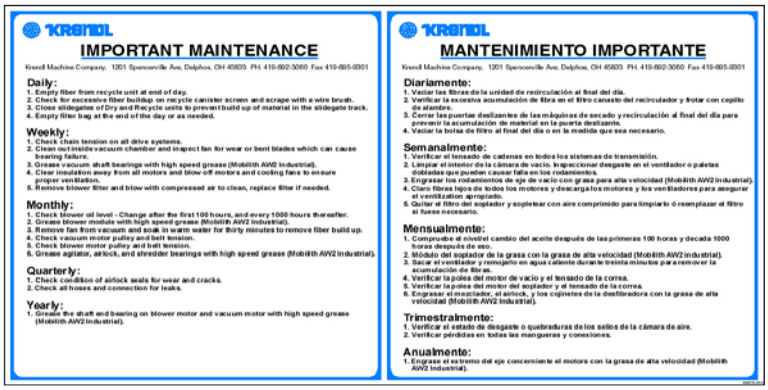

KRENDL

IMPORTANT MAINTENANCE

Krendl Machine Company, 1201 Spencerville Ave, Delphos, OH 45833 PH: 419-692-3060 Fax 419-695-9301

Daily:
1. Empty fiber from recycle unit at end of day.
2. Check for excessive fiber buildup on recycle canister screen and scrape with a wire brush.
3. Close slidegates of Dry and Recycle units to prevent build up of material in the slidegate track.
4. Empty filter bag at the end of the day or as needed.

Weekly:
1. Check chain tension on all drive systems.
2. Clean out inside vacuum chamber and inspect fan for wear or bent blades which can cause bearing failure.
3. Grease vacuum shaft bearings with high speed grease (Mobilith AW2 Industrial).
4. Clear insulation away from all motors and blow-off motors and cooling fans to ensure proper ventilation.
5. Remove blower filter and blow with compressed air to clean, replace filter if needed.

Monthly:
1. Check blower oil level - Change after the first 100 hours, and every 1000 hours thereafter.
2. Grease blower module with high speed grease (Mobilith AW2 Industrial).
3. Remove fan from vacuum and soak in warm water for thirty minutes to remove fiber build up.
4. Check vacuum motor pulley and belt tension.
5. Check blower motor pulley and belt tension.
6. Grease agitator, airlock, and shredder bearings with high speed grease (Mobilith AW2 Industrial).

Quarterly:
1. Check condition of airlock seals for wear and cracks.
2. Check all hoses and connection for leaks.

Yearly:
1. Grease the shaft end bearing on blower motor and vacuum motor with high speed grease (Mobilith AW2 Industrial).

KRENDL

MANTENIMIENTO IMPORTANTE

Krendl Machine Company, 1201 Spencerville Ave, Delphos, OH 45833 PH: 419-692-3060 Fax 419-695-9301

Diariamente:
1. Vaciar las fibras de la unidad de reciclación al final del día.
2. Verificar la excesiva acumulación de fibra en el filtro canasto del recirculador y frotar con cepillo de alambre.
3. Cerrar las puertas deslizantes de las máquinas de secado y reciclación al final del día para prevenir la acumulación de material en la puerta deslizante.
4. Vaciar la bolsa de filtro al final del día o en la medida que sea necesario.

Semanalmente:
1. Verificar el tensado de cadenas en todos los sistemas de transmisión.
2. Limpiar el interior de la cámara de vacío. Inspeccionar desgaste en el ventilador o paletas dobladas que pueden causar falla en los rodamientos.
3. Engrasar los rodamientos de eje de vacío con grasa para alta velocidad (Mobilith AW2 Industrial).
4. Claro fibras lejos de todos los motores y descarga los motores y los ventiladores para asegurar el ventilization apropiado.
5. Quitar el filtro del soplador y sopletear con aire comprimido para limpiarlo ó reemplazar el filtro si fuese necesario.

Mensualmente:
1. Compruebe el nivel/el cambio del aceite después de las primeras 100 horas y decada 1000 horas después de eso.
2. Módulo del soplador de la grasa con la grasa de alta velocidad (Mobilith AW2 Industrial).
3. Sacar el ventilador y remojarlo en agua caliente durante treinta minutos para remover la acumulación de fibras.
4. Verificar la polea del motor de vacío y el tensado de la correa.
5. Verificar la polea del motor del soplador y el tensado de la correa.
6. Engrasar el nivelador, el airlock, y los cojinetes de la desfibradora con la grasa de alta velocidad (Mobilith AW2 Industrial).

Trimestralmente:
1. Verificar el estado de desgaste o quebraduras de los sellos de la cámara de aire.
2. Verificar pérdidas en todas las mangueras y conexiones.

Anualmente:
1. Engrase el extremo del eje concerniente el motors con la grasa de alta velocidad (Mobilith AW2 Industrial).

General maintenance information and schedule provided here.

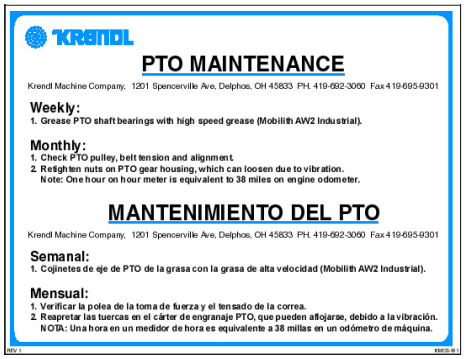

KRENDL

PTO MAINTENANCE

Krendl Machine Company, 1201 Spencerville Ave, Delphos, OH 45833 PH: 419-692-3060 Fax 419-695-9301

Weekly:
1. Grease PTO shaft bearings with high speed grease (Mobilith AW2 Industrial).

Monthly:
1. Check PTO pulley, belt tension and alignment.
2. Retighten nuts on PTO gear housing, which can loosen due to vibration.
   Note: One hour on hour meter is equivalent to 38 miles on engine odometer.

MANTENIMIENTO DEL PTO

Krendl Machine Company, 1201 Spencerville Ave, Delphos, OH 45833 PH: 419-692-3060 Fax 419-695-9301

Semanal:
1. Cojinetes de eje de PTO de la grasa con la grasa de alta velocidad (Mobilith AW2 Industrial).

Mensual:
1. Verificar la polea de la toma de fuerza y el tensado de la correa.
2. Reapretar las tuercas en el cárter de engranaje PTO, que pueden aflojarse, debido a la vibración.
   NOTA: Una hora en un medidor de hora es equivalente a 38 millas en un odómetro de máquina.

Indicates how to engage and disengage PTO.

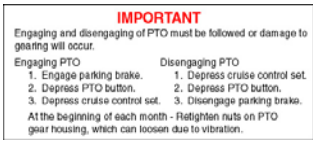

IMPORTANT

Engaging and disengaging of PTO must be followed or damage to gearing will occur.

Engaging PTO	Disengaging PTO
1. Engage parking brake.	1. Depress cruise control set.
2. Depress PTO button.	2. Depress PTO button.
3. Depress cruise control set.	3. Disengage parking brake.

At the beginning of each month - Retighten nuts on PTO gear housing, which can loosen due to vibration.

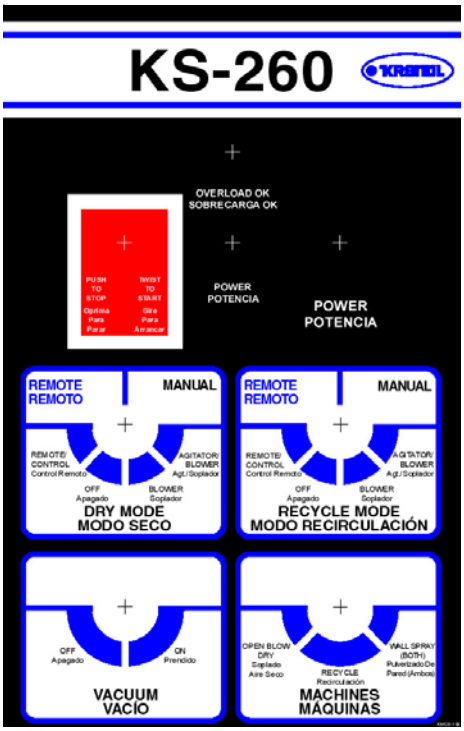

Indicates the controls that start, stop, and run the KS260.

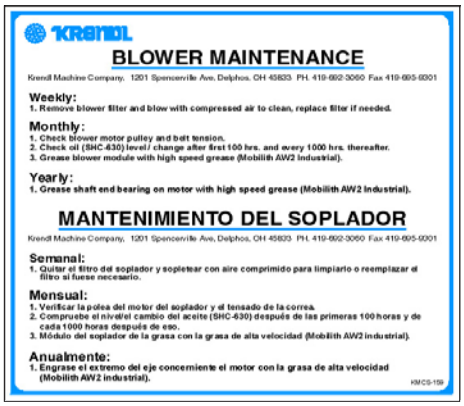

KRENDL

BLOWER MAINTENANCE

Krendl Machine Company, 1201 Spencerville Ave, Delphos, OH 45833 PH: 419-692-3060 Fax 419-695-9301

Weekly:
1. Remove blower filter and blow with compressed air to clean, replace filter if needed.

Monthly:
1. Check blower motor pulley and belt tension.
2. Check oil (SHC-630) level / change after first 100 hrs. and every 1000 hrs. thereafter.
3. Grease blower module with high speed grease (Mobilith AW2 Industrial).

Yearly:
1. Grease shaft end bearing on motor with high speed grease (Mobilith AW2 Industrial).

MANTENIMIENTO DEL SOPLADOR

Krendl Machine Company, 1201 Spencerville Ave, Delphos, OH 45833 PH: 419-692-3060 Fax 419-695-9301

Semanal:
1. Quitar el filtro del soplador y sopletear con aire comprimido para limpiarlo o reemplazar el filtro si fuese necesario.

Mensual:
1. Verificar la polea del motor del soplador y el tensado de la correa.
2. Compruebe el nivel/el cambio del aceite (SHC-630) después de las primeras 100 horas y de cada 1000 horas después de eso.
3. Módulo del soplador de la grasa con la grasa de alta velocidad (Mobilith AW2 Industrial).

Anualmente:
1. Engrase el extremo del eje concerniente el motor con la grasa de alta velocidad (Mobilith AW2 Industrial).

KMCS-159

Blower maintenance information and schedule provided here.

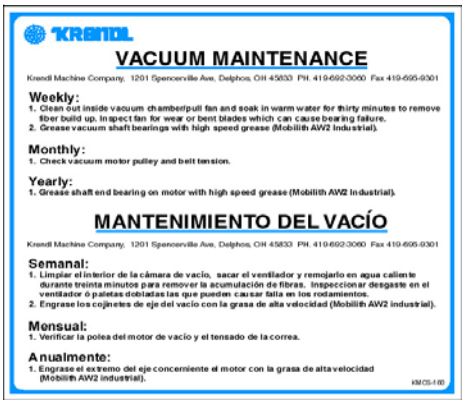

KRENDL

VACUUM MAINTENANCE

Krendl Machine Company, 1201 Spencerville Ave, Delphos, OH 45833 PH: 419-692-3060 Fax 419-695-9301

Weekly:
1. Clean out inside vacuum chamberpull fan and soak in warm water for thirty minutes to remove fiber build up. Inspect fan for wear or bent blades which can cause bearing failure.
2. Grease vacuum shaft bearings with high speed grease (Mobilith AW2 Industrial).

Monthly:
1. Check vacuum motor pulley and belt tension.

Yearly:
1. Grease shaft end bearing on motor with high speed grease (Mobilith AW2 Industrial).

MANTENIMIENTO DEL VACÍO

Krendl Machine Company, 1201 Spencerville Ave, Delphos, OH 45833 PH: 419-692-3060 Fax 419-695-9301

Semanal:
1. Limpiar el interior de la cámara de vacío, sacar el ventilador y remojarlo en agua caliente durante treinta minutos para remover la acumulación de fibras. Inspeccionar desgaste en el ventilador ó paletas dobladas las que pueden causar falla en los rodamientos.
2. Engrase los cojinetes de eje del vacío con la grasa de alta velocidad (Mobilith AW2 Industrial).

Mensual:
1. Verificar la polea del motor de vacío y el tensado de la correa.

Anualmente:
1. Engrase el extremo del eje concerniente el motor con la grasa de alta velocidad (Mobilith AW2 Industrial).

KMCS-160

Vacuum maintenance information and schedule provided here.



Monthly maintenance schedule for the greasing of bearings on the agitators, shredders and airlock bearings.



Weekly maintenance schedule for vacuum bearings.

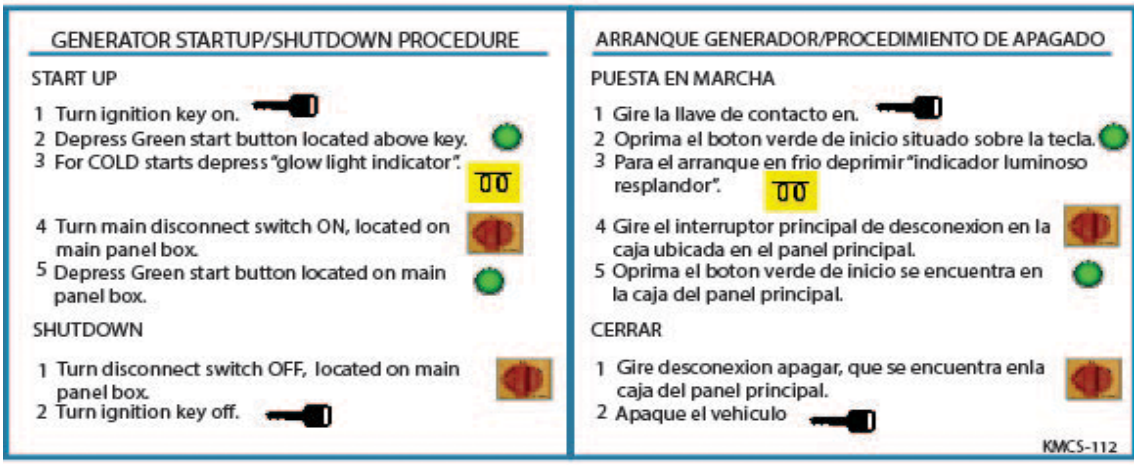

Generator startup/shutdown procedure instructions.



During operation, this machine is loud. Wear hearing protection. Failure to do this could result in hearing loss.



Identifies air adjustment control.

Returned Goods Procedure

IF MACHINE WAS NOT PURCHASED DIRECTLY FROM KRENDL MACHINE COMPANY, CONTACT YOUR SUPPLIER / DISTRIBUTOR.

When returning products to Krendl for repair, first obtain a return goods authorization, at which time you will be given shipping instructions. The product must be shipped **PREPAID**:

Krendl Machine Company
1201 Spencerville Rd
Delphos, Ohio 45833 U.S.A.

Telephone: 800-459-2069
Fax: 419-695-9301
E-mail: krendl@krendlmachine.com
Web Site: www.krendlmachine.com

Once the unit is received, it will be inspected. In-warranty units will be repaired and returned immediately. An estimate of repair charges will be provided for out-of-warranty units.

Warranty

Krendl Machine Company (Company) warrants to each original purchaser (Buyer) of its machines that such products will be free of manufacturing defects for a period of 2 years from the date of shipment to the Buyer. (This does not include accessories, pumps, blowers, wall scrubbers, etc.)

No warranty is made with respect to:

1. **Components or accessories manufactured and warranted by others. Warranties for purchased component parts as supplied from vendor such as engine, electric motor, blower, gearbox, transmission, etc., if furnished by the manufacturer of the component, are on file at the Company's main office and copies will be furnished at request of Buyer. Component(s), shipping costs prepaid, shall be sent to Company who in turn shall forward to vendor for evaluation and warranty determination.**
2. **Any defect caused by repair, alteration and/or adjustment performed by Buyer or customer/ vendor of Buyer without the express written authorization of the Company.**
3. **The labor costs of replacing parts by parties other than the Company.**
4. **Any machine that has not been operated and/or maintained in accordance with normal industry practice and the written recommendations of the Company. (e.g. machine operated with an improperly sized, worn or damaged hose, improper or inattention to preventative maintenance, etc.)**
5. **The product has been subjected to misuse, negligence or accident or results of any application or use of the blowing equipment not in accordance with the Company recommendations.**

This limited warranty does not cover the free replacement of component parts that become inoperative due to wear and usage and need to be replaced on a regular basis, including but not limited to: airlock seal(s), agitator(s), shredder(s), auger(s), fuse(s), switch(es), clutch(es), hose(s), shaft seal(s), chain(s), belt(s), sprocket(s), pulley(s), bearing(s), cable(s), battery(ies), filter(s), fan(s), etc.

The Company's obligation under this warranty is limited to repairing or replacing (at Company option) any part that is determined by the Company to be suffering from a manufacturing defect. The Company (at Company option) will provide any required parts and labor to the Buyer. If the equipment or parts must be returned to the Company for repair, all transportation costs shall be the Buyer's responsibility.

THIS LIMITED WARRANTY IS EXPRESSLY IN LIEU OF ANY OTHER GUARANTEES AND / OR WARRANTIES, ORAL OR WRITTEN, EXPRESSED OR IMPLIED, INCLUDING WITHOUT LIMITATION, THE IMPLIED WARRANTY OF MERCHANTABILITY. NO WARRANTY, EXPRESS OR IMPLIED, OTHER THAN THE AFORESAID WARRANTY IS MADE OR AUTHORIZED BY COMPANY. COMPANY SHALL NOT BE LIABLE FOR ANY DIRECT, INDIRECT, INCIDENTAL OR CONSEQUENTIAL DAMAGES TO PROPERTY OR INJURY TO ANY PERSON OR COSTS ASSOCIATED WITH LOSS OF PRODUCTION RESULTING IN LOSS OF REVENUE, PROFITS OR LOSS OF EQUIPMENT THROUGH THE USE OF THIS EQUIPMENT.

Note: Special job circumstances incurring costs for specialized repair and next day delivery of parts will not be reimbursed by the manufacturer unless authorized by factory.

Introduction

The System contains six distinct parts: a dry unit, a recycle unit, a 10 hp blower, a 15 hp vacuum, a filter system and a generator.

Illust. 1



Objective:
to familiarize spray technicians with the features and use of the KS-260 system.

A 4" hose connects the dry unit airlock and the recycle unit airlock. (Illust. 2B) When the system is used for spraying walls (i.e., both airlocks are running) the blower blows the dry cellulose from the dry airlock, through the 4" connecting hose and into the recycle airlock. As the material passes through the recycle airlock, it blends with the recycle insulation metered from the recycle hopper. This homogeneous blend of dry material and recycled material continues up the hose and out the wall spray nozzle. Both airlocks can be adjusted independently for material feed.

The Vacuum provides a fast method of recycling material from the job site to the recycle hopper. This recycle is metered back into the spray system. The filter bag separates the fine dust particles from the air discharge. This provides a dust free environment inside and outside of the truck.



Viewed from driver side of truck (Illust. 2A)

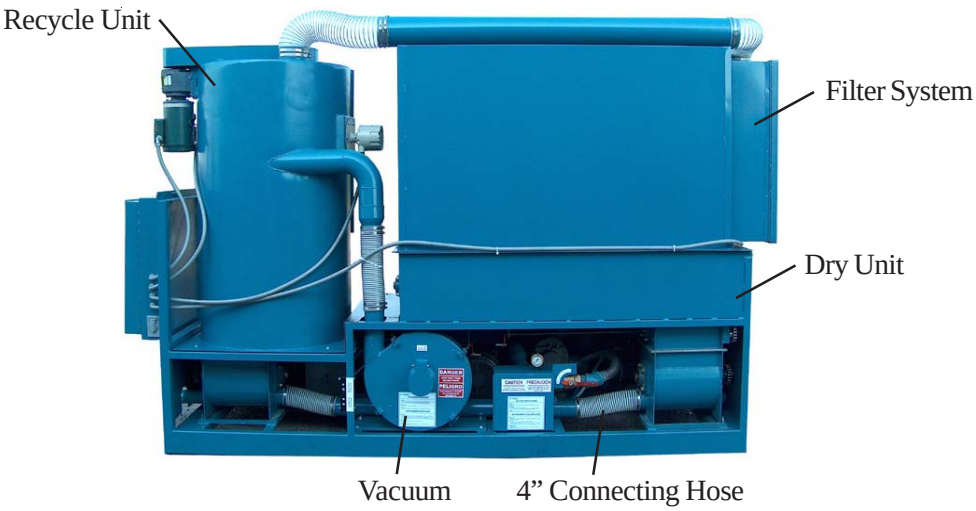

Viewed from passenger side of truck (Illust. 2B)

Dry Unit

The dry unit is located inside the truck on the passenger’s side. Located on the truck exterior is a 24” x 72” access door. (Illust. 3) This door should remain open when the machine is operating for open blow attics. Accessable through this door are the controls for the blower air and dry insulation feed rate. (Illust. 4) The maintenance side of the machine faces the inside of the truck for easy access. (See Maintenance section pg.25 for better access.)



Illust. 3

Airlocks

The dry airlock of the KS-260 is accessible through the 24” x 72” door. (Illust. 3) When blowing attics, the 3” or 4” outside blowing hose should be connected directly to this airlock. When spraying walls, the 3” **outside** blowing hose should first be connected to the recycle airlock at the rear of the machine. The 4” **inside** connecting hose connects directly into the back side of the recycle airlock from the dry airlock. (Illust. 4) The dry material passes through the recycle airlock (which is running while spraying) and the recycle blends into the flow of dry material.

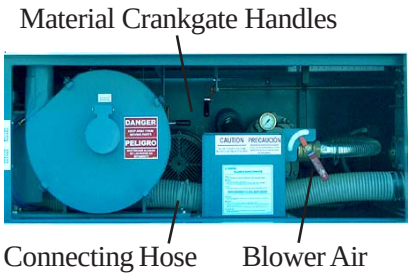

Illust. 4

Hopper

(Facing machine from inside truck) An extension hopper is located on the left hand side. This extension hopper provides a capacity of sixteen (16) 30-pound bags of insulation material.

Recycle Unit

The recycle unit is accessible through the 24" x 72" door on the passenger side of the truck. (See illust. 3 on page 10) Feed adjustments can also be made at this location with the crankgate handle. (See illust. 4 on page11) On top of the airlock is a canister, or sealed tank top. The canister provides approximately 25 cubic feet of holding tank capacity for the recycle (3-4 bags). The unit is sealed with gaskets to prevent dust from leaking out and entering the truck.

The recycle unit is accessible through the 24 x 72 door on the passenger side of the truck.

Inside the canister, a mesh screen filters out small particles. A wiper edge keeps this screen open to air passage. (**IMPORTANT:** At the end of each day, open the access door of the canister and remove insulation build-up on the mesh screen. This will prevent any loss of vacuum power and reduce pressure build-up inside canister. **Note: canister door has a limit switch to stop motion when door is opened.) (Illust. 5) Caution: Be sure machine is off before performing maintenance.**

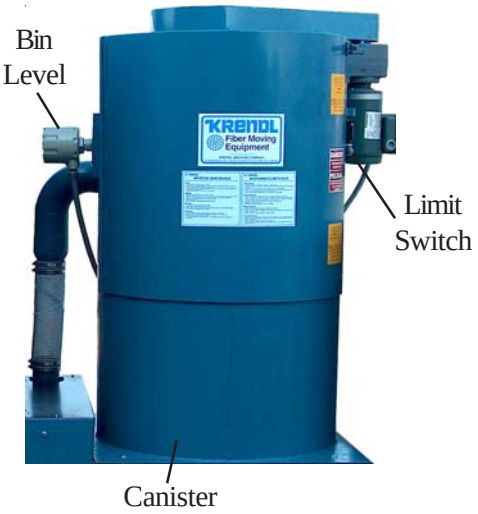

Illust. 5

An agitation system inside the canister prevents material from bridging. On the inside of the canister is a paddle wheel sensor (bin level indicator), which shuts the vacuum off when the canister becomes full of recycle. (Illust. 5) As material is used, the sensor begins to rotate again and turns the vacuum system back on. A timing mechanism in the main electrical panel box delays starting so that the motor will not short-cycle. During operation, the vacuum automatically turns on and off as needed to keep the hopper from overloading and packing the canister.

The clean-up crew should keep a close eye on the level of material in the hopper, and not allow it to run empty. During spraying operations, the hopper can empty out in 1 to 2 minutes. The clean-up crew should stay about 10 feet behind the spraying. When the vacuum system starts, the crew should begin vacuuming before the hopper empties.

The clean-up crew should stay about 10 feet behind the spray tech.

Blower

Providing the air for the KS-260 is a 250 CFM, 6 p.s.i. positive displacement blower. The blower supplies the necessary air pressure for open blowing and spraying insulation over 150 ft. The blower is protected with a check valve, pressure relief valve, and air filter components. An air bypass valve provides accurate control of blower air.

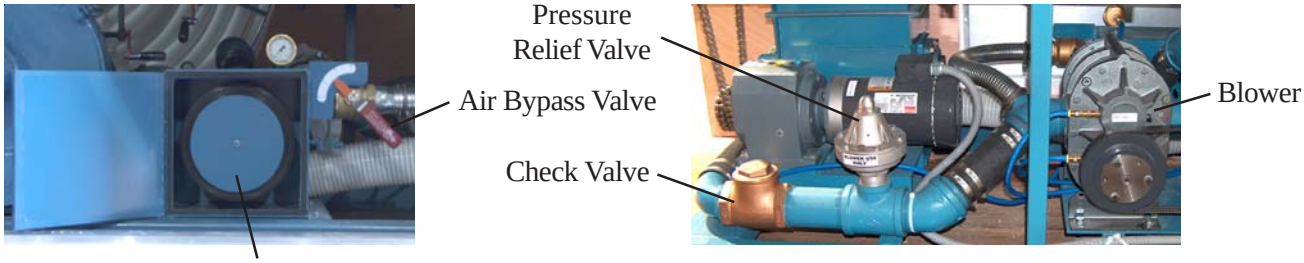

Illust. 6

Vacuum

The vacuum (located at the 24” x 72” access door) draws in recycle material from the job site and delivers it directly into the recycle canister. Once the recycle material has been deposited into the canister, the air passes through the mesh screen in the canister, where it is pre-filtered. It then passes to the filter bag where it is further filtered and exhausted. **Caution: Attach hose to vacuum inlet before turning machine on.**

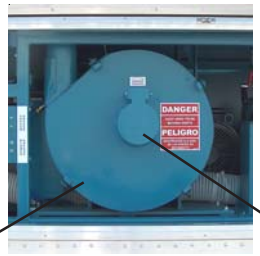

Illust. 7

Filter System

The filter system (located on the side of the dry hopper) consists of a filter box with a filter bag. The filter bag provides a filtration system which separates the fine dust particles from the air discharge. This provides a dust free environment inside and outside of the truck. On the side of the filter system is a red Kill Switch. In case of a safety related emergency, push this Kill Switch to immediately shut down the system. **Note: Empty the filter bag as needed. Caution: Turn machine off before emptying filter bag. Failure to do so could result in inhalation of material, resulting in injury.**



Illust. 8

Water Tank System

The water tank system consists of a 230-gallon water tank and a cabinet which contains the water pump, heaters, hose reel, hoses, and controls. (Illust. 9) The water tank is covered by two inches of rigid board foam insulation inside of a metal frame. This frame facilitates securing the tank to the floor and stabilizing it to the front of the truck with the mounting bracket. Built into one end of the tank (passenger side) is a pump cabinet. This contains the water pump, pressure line, hose reel and a pump cabinet heater with thermostat. **Note: In freezing temperatures attach power cord to outlet below pump cabinet, and flip toggle switch inside pump cabinet to “line”. This will maintain a higher temperature inside tank and pump cabinet. Caution: Do not expose power cord to water or submerge in water when operating system.**



Illust. 9

Pump Cabinet

The supply (suction) line from the tank to the pump has a clear bowl filter with an 80-mesh screen, while the return line runs directly back into the tank. This arrangement allows the system to operate for long periods of time with the nozzle turned off without causing any pump damage. Both suction and return lines have shut-off ball-valves and quick couplers which allow the pump to be removed without first draining the water tank. **Caution: Do not have power plugged in to outlet when washing hands. (There is also a valve on the fill hose which must be opened when filling tank.)** The combination of 2" foam insulation surrounding the tank, along with the pump cabinet heater, allow the use of this system in subzero weather conditions. **(Note: Put pressure hose through floor to keep door closed tight in subzero temperatures.)**

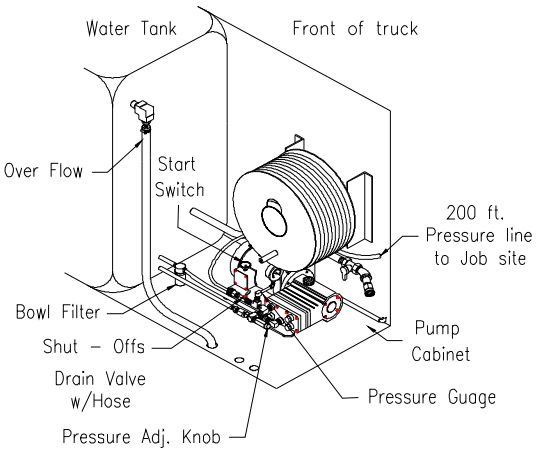

Illust. 10

Pump Controls

Controls for the water pump system include a Start switch, a pressure-adjustment knob, and a water pressure gauge. (See illust. 10) The Start switch is located directly on the motor. The brass, hexagon-shaped knob located near the cabinet door adjusts system water pressure, while the nearby gauge allows precise monitoring.

Water Pressure

When wall spraying, system water pressure should be adjusted as follows:

- For a 2 1/2" nozzle, pressure will range from 200 to 250 psi depending on the volume of material being sprayed.

Generator Set Option

Power for the KS-260 is delivered by a 60KW 3-phase generator, which is driven by a diesel engine. **Note: Only factory approved and installed generators can be used to enforce warranties.** The generator features an automatic safety system to shut down in case of a low oil alarm or high temperature. It also sports a quiet, industrial-grade muffler, with rubber base-mounts to attach to the engine base for extra sound and vibration control.

The diesel generator is surrounded by a special air tight metal cowling with outside venting, which directs intake air through the engine radiator for cooling, and protects the unit from dust. The cowling contains a side door, which allows easy access during oil and filter changes. Though the cowling is hard-mounted to the floor and wall, it can be easily removed to allow more complete engine or generator access. **Note: Only use certified John Deere service centers for repairs or warranty issues.**

Fuel Pump

The diesel engine utilizes a fuel pump, making it possible to mount the fuel line to the existing diesel fuel tank or to an optional DOT-approved tank.

Diesel Generator Controls and Starting

On the generator inside the access door is a control panel that contains an hour meter, which is used to measure the run time of the engine and several LED's used to indicate the overspeed, failure to start, oil pressure, battery voltmeter, and temperature of the unit. (Illust. 11) **Note: Oil changes are determined by the number of hours the engine has been running.** The control panel also contains an ignition push-button switch which must be held in to activate the Starter. Do not release the push-button until the generator starts. **Note: In cold temperatures, press the preheat button to preheat the engine before starting. Caution: Do not turn generator on in an enclosed building.**

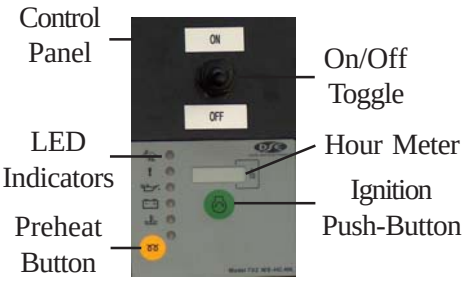

(Illust. 11)

Power Take Off Generator Option

Power for the KS-260 is delivered by a 60KW 3-phase generator, which is driven by a power take off. **Note: only factory approved and installed generators can be used to enforce warranties.** The generator is surrounded by a ventilated enclosure that provides protection from moving parts. The enclosure is mounted to the truck and can be removed to allow access to the power take off pulleys, belt, and ventilation fan.

When engaging power take off, put truck in neutral and engage parking brake. Located inside the truck cab is a PTO ignition switch. To engage power take off, depress the clutch, turn PTO ignition switch to the **ON** position, release clutch slowly and allow PTO to come up to speed. To disengage power take off, depress the clutch and wait 15 seconds until the PTO stops turning, turn PTO ignition switch to **OFF** position, and then release the clutch.



(Illust. 12)

Control Panel Module

The Control Panel Module is located at the back end of the truck, and is accessible from ground level. (Illust. 13) The Control Panel Module contains the Main Power Switch and the system operating controls.

Main Panel Power Box

On top of the Main Panel Power Box is a red Kill Switch. (Illust. 13) When pushed in, this switch shuts off all power to the machine. In case of a safety related emergency, foreign material being dropped into the hopper, or if any strange noises are heard from the equipment, push this Kill Switch to immediately shut down the system. (**IMPORTANT**: Do not open panel box until main power disconnect is locked out and generator is off.)

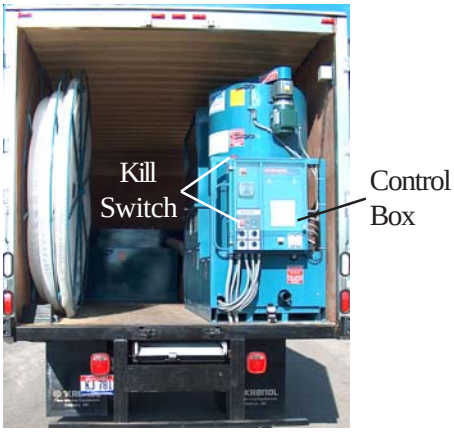

(Illust. 13)

A second Kill Switch is located on the face of the control panel on the left side. (Illust. 15) This switch performs the same job as the one located on top of the box: it shuts down the entire system in the event of an emergency. The top switch is positioned for easy access from **inside the truck**, while the switch on the panel is positioned for easy access from **outside the truck**

The Kill Switch shuts down the entire system in the event of an emergency.

- To engage the Kill Switch, push the red button.
- To disengage the Kill Switch, pull the red button.
- The green Power/Reset button must be pushed after resetting any Kill Switch to resume power supply. (Illust. 15)

On the upper left side of the Main Power Panel Box is a Disconnect switch. (Illust. 14) This switch shuts down all power inside the Main Panel Box. The Disconnect switch must first be turned Off ("**O**" shows in the indicator window) before turning off the generator and it must remain off while generator is restarted. This will help protect the electrical system from low voltage when generator is coming up to speed. Both the disconnect switch and the Generator must be shut-off, before the panel box door can be opened.

Only qualified, trained personnel should access this box.

Once the panel box has been closed, the Disconnect switch must be turned back to On ("**I**" shows in the indicator window) and the green Power/Reset button pushed before power will be restored, and the system can begin operation. Be sure to retighten the two screw brackets on the left side of panel to prevent water and insulation from leaking into the box.



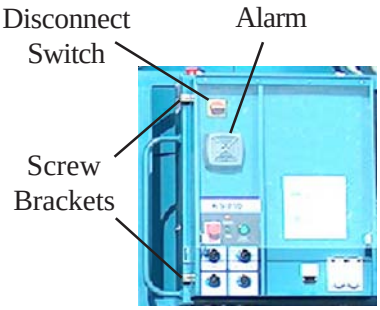

(Illust.14)

Just below the Disconnect switch is an alarm. (Illust. 14) This alarm will sound for a few seconds whenever the machine is turned on; and before agitators move. Warning! When the alarm sounds, be sure that all hands and clothing are clear from the machine, since the unit is about to turn on.

System Operating Controls

At the bottom of the control panel Module are the operating controls for the Modular System. (Illust. 15)
These include:

- a red, push-button-type Kill Switch,
- a green Power/Reset button,
- two indicating lights
  ('green' Power On and 'orange' Overload OK),
- two Mode selector switches,
  (Dry Mode, Recycle Mode)
- a Machines selector switch,
  (Open Blow, Recycle, Wall Spray)
- a Vacuum switch,

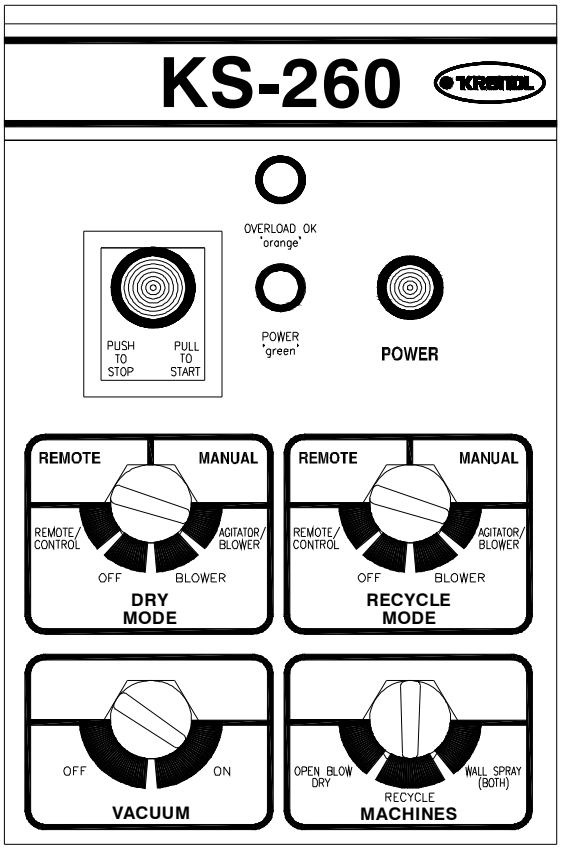

The System operating controls. (Illust. 15)

Power/Reset Button

The green Power/Reset button turns on the Control Panel. After starting the genset or engaging the PTO, engage Main Disconnect switch then press the Power/Reset button. It is also necessary to reset the system after any Kill Switch has been engaged. (See illust. 15 on page 16)

Mode Switches

There are two Mode switches (See illust. 15 on page 16):

- The Dry Mode switch operates the Dry motor.
- The Recycle Mode switch operates the Recycle motor.

Each Mode switch contains four settings:

- **Manual: Agitator/Blower** (On/Off)
- **Manual: Blower** On/Off
- System **off**
- **Remote** (using either the corded remote or the radio control remote)

When wall spraying, turn both the Dry Mode and the Recycle Mode switches to **Remote**, while setting 'Machines Switch' **to Wall Spray.**

When blowing attics, turn the 'Machines Switch' to **Open Blow**. This will prevent the recycle machine from running while operating the dry machine and blower with remote control.

Machines Switch

The Machines switch makes it possible to use each machine independently, or to operate both machines together as a system (wall spraying). This switch has three settings: (See illust. 15 on page 16).

- **Open Blow Dry**
- **Recycle**
- **Wall Spray**

Vacuum Switch

This switch turns the vacuum system on and off. (Note: If Vacuum does not turn on when activating Vacuum Switch the canister may be full.)

Fuse Protection - Breakers

The (3) 120 volt outlets located at the bottom of the control panel, the water pump and inputs and outputs of transformers are protected by manual breakers located inside the control panel on the upper righthand side. (Illust.16)



The fuse protection - breakers. (Illust. 16)

Panel Outlets

At the top right of the panel Box are a series of breakers which protect the pump and the three 120V outlets. (See illust. 16 on page 17)

At the bottom right of the Panel Box are a series of outlets (Illust. 17):

Note: When using extension power cords, wire gauge size should not be less than input cord on unit and not to exceed 50' in length. **(See Voltage Drop Chart Below.)**

- one 24VAC remote outlet,
- and three 120V outlets (two on front of box and one on side)

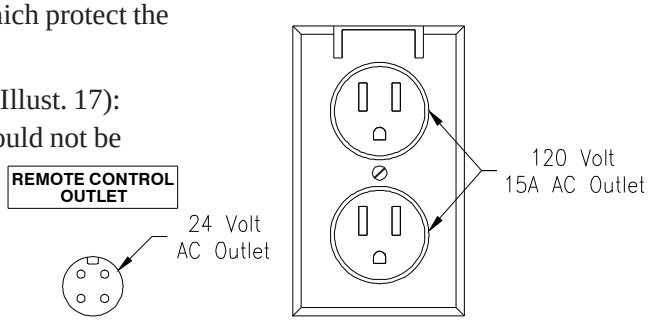

The KS-260 panel outlets (Illust. 17)

VOLTAGE DROP CHART

Typical voltage drop values based on conductor size and one-way length* (60 C termination and insulation)

25 FEET									
		12 AWG	10 AWG	8 AWG	6 AWG	4 AWG	3 AWG	2 AWG	1 AWG
AMPERES	20	1.98	1.24	0.78	0.49	0.31	0.25	0.19	0.15
	30		1.86	1.17	0.74	0.46	0.37	0.29	0.23
	40			1.56	0.98	0.62	0.49	0.39	0.31
	50				1.23	0.77	0.61	0.49	0.39
	60					0.93	0.74	0.58	0.46

50 FEET									
		12 AWG	10 AWG	8 AWG	6 AWG	4 AWG	3 AWG	2 AWG	1 AWG
AMPERES	20	3.95	2.49	1.56	0.98	0.62	0.49	0.39	0.31
	30		3.73	2.34	1.47	0.93	0.74	0.58	0.46
	40			3.13	1.97	1.24	0.98	0.78	0.62
	50				2.46	1.55	1.23	0.97	0.77
	60					1.85	1.47	1.17	0.92

75 FEET									
		12 AWG	10 AWG	8 AWG	6 AWG	4 AWG	3 AWG	2 AWG	1 AWG
AMPERES	20	5.93	3.73	2.34	1.47	0.93	0.74	0.58	0.46
	30		5.59	3.52	2.21	1.39	1.1	0.87	0.69
	40			4.69	2.95	1.85	1.47	1.17	0.92
	50				3.69	2.32	1.84	1.46	1.16
	60					2.78	2.21	1.75	1.39

100 FEET									
		12 AWG	10 AWG	8 AWG	6 AWG	4 AWG	3 AWG	2 AWG	1 AWG
AMPERES	20	7.90	4.97	3.13	1.97	1.24	0.98	0.78	0.62
	30		7.46	4.69	2.95	1.85	1.47	1.17	0.92
	40			6.25	3.93	2.47	1.96	1.56	1.23
	50				4.92	3.09	2.45	1.94	1.54
	60					3.71	2.94	2.33	1.85

125 FEET									
		12 AWG	10 AWG	8 AWG	6 AWG	4 AWG	3 AWG	2 AWG	1 AWG
AMPERES	20	9.88	6.21	3.91	2.46	1.55	1.23	0.97	0.77
	30		9.32	5.86	3.69	2.32	1.84	1.46	1.16
	40			7.81	4.92	3.09	2.45	1.94	1.54
	50				6.15	3.86	3.06	2.43	1.93
	60					4.64	3.68	2.92	2.31

150 FEET									
		12 AWG	10 AWG	8 AWG	6 AWG	4 AWG	3 AWG	2 AWG	1 AWG
AMPERES	20	11.85	7.46	4.69	2.95	1.85	1.47	1.17	0.92
	30		11.18	7.03	4.42	2.78	2.21	1.75	1.39
	40			9.38	5.90	3.71	2.94	2.33	1.85
	50				7.37	4.64	3.68	2.92	2.31
	60					5.56	4.41	3.50	2.77

Ex: A two-wire 20-ampere circuit using 12 AWG with a one-way distance of 25 feet will drop 1.98 volts; 120 volts - 1.98 volts = 118.02 volts as the load voltage.

Remote Control Units

Wireless Radio Controller

When the manual switch on the control panel is being used, the remotes will not work.

The wireless radio controller contains three control switches:

- Blower/Feed
- Blower (only)
- Off

When switching from Blower/Feed to blower you do not have to push Off. Simply push Blower and the control will automatically switch the machine to air-only while the blower continues to run.

Corded Controllers

One corded remote control pendant, provided with the machine, can be used instead of the wireless radio system. These corded controllers have only three functions:

- Blower/Feed
- Off
- Blower (only)

Operating Instructions

Hoses

The normal recommended length of hose is 150 feet. Longer lengths of hose increase back pressure and decrease the material flow rates. Machine settings will vary with longer hose (i.e. adjustment of the dry and/or recycle material feed gates and adjustment of the air bypass valve).

Additional lengths of hose can be added if necessary to reach a distant area. After completing these sections, remove extra hose to speed up production. **Caution: Be sure all hoses and clamps are secure before turning on or operating machine.**

Recommended hose sizes: Vacuum: 4” I.D. smooth bore hose (150 ft. max.)
Open Blow & Stabilized: 4” I.D. open blow attic
Wall Spray: 3” I.D. x 150 ft. long connected to 2 1/2” I./D. x 12 ft. (light weight hose) for all cavity spray.

Using a longer hose decreases spray pressure and velocity.

Wall Spray

Feed gate settings may vary from one machine to another.

Machine Settings

- At the main Control Panel, set the Dry Mode switch to **Remote**.
- Set the Recycle Mode switch to **Remote**.
- Set the Machines switch to **Wall Spray**.
- Turn the Main Power Switch ON.
- Press the green Power/Reset button at the control panel. (‘green’ power light ‘on’)
- Turn on vacuum switch.

Air and Feed Settings (Initial)

150’ Hose Length

- For initial setting, open the air bypass valve to 2.
- Open the feed gate on the dry airlock to 4 1/2” or 5” on the scale.
- Open the feed gate on the recycle airlock to 5” on the scale gauge.

  Note: This setting could vary from machine to machine.
- For first time use, begin with a low feed setting, then gradually increase until proper spray is achieved.

Attic Blowing

Machine Settings for Attic Blowing

- At the Main Control Panel, set the Dry Mode selector switch to **Remote**.
- Turn the Vacuum switch to **Off**.
- Set the Machines selector switch to **Open Blow.**
- Turn the Main Power Switch ON.
- Press the green Power/Reset button at the control panel. (‘green’ power light ‘on’)

Air and Feed settings (stabilized)

150’ Hose Length

- Close air by-pass valve to 3 to direct <u>all</u> the air into the attic hose.

  Note: If dry is being blown without Internal Wetting System, lower air setting may reduce dust.

  Note: Material from different manufactures will require different settings.

To begin blowing attics, turn the Remote cord switch or Wireless Radio Control Feed switch **On**. To stop the material feed, switch or push the Blower button **Off**. The feed and water (see Attic nozzle assembly below) will automatically turn off, while the air should continue until the material stops flowing. **(Note: Machines selector switch should be on "Open Blow" to properly actuate attic nozzle/internal wetting system)**

Do not shut the blower off until all material has stopped flowing.

Attic Nozzle Assembly/ Internal Wetting System

When blowing attics with a 4" hose using stabilized product, use the expansion hose assembly. This assembly consists of (in the sequence given) (Illust. 18) **Caution: Keep Internal Wetting System and hoses away from electrical cords.**

- 10' piece of 4'' hose,
- a reducer tube (4" up to 5"),
- a 12" piece of 5" hose,
- an attic nozzle (water tips eject water in the direction of material flow),
- 10 feet of 5" hose, and
- a reducer tube (5" down to 4").

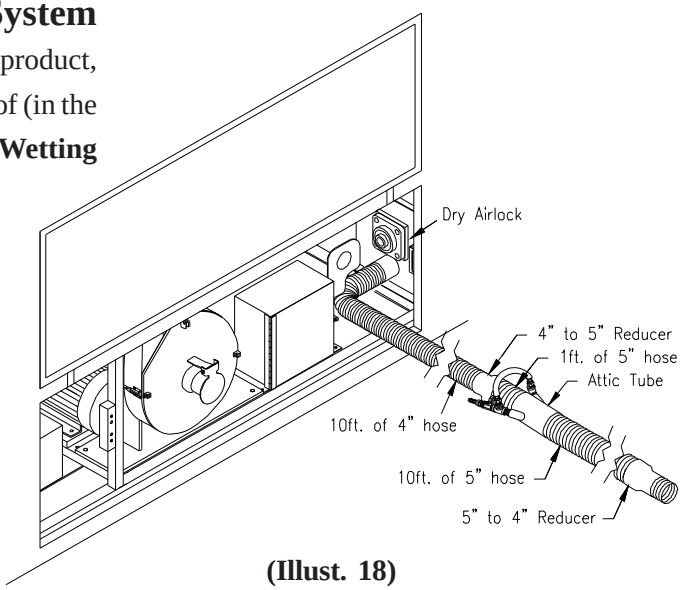

(Illust. 18)

Positioning the Attic Nozzle

- Connect (and clamp) this hose assembly to the dry airlock.
- Place the attic nozzle assembly onto this hose making sure the jets are directed with the material flow.
- Hook the remaining hose to the attic nozzle assembly.
- Connect the high pressure hose from the hose reel (remove the wall cavity spray nozzle) to the Internal Wetting Module (using a quick-coupler connection) located near pump base.
- Connect the hose from the Internal Wetting Module to the attic nozzle on ground.
- Make sure both valves are open on pump and Internal Wetting System tube.
- Machines selector switch to 'Open Blow'.

Make sure the cord on the Internal Wetting Module is plugged into the 120V outlet on the small junction box inside pump cabinet. When the machine is turned on, the water will automatically turn on. When the feed is turned off, the water will automatically turn off.

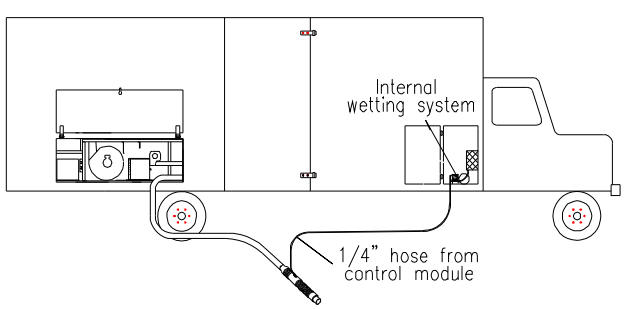

(Illust. 19)

Cleaning the Attic Nozzle

Near the end of the job (or every 50 bags), and while the machine is still operating, tap the internal wetting system hose firmly to clear out sludge. Begin tapping the hose about 4 feet down line from the nozzle, and continue moving towards the nozzle.

After Completion of the Attic

- Remove the Internal Wetting System tube.
- **Maintenance Tip:** Soak nozzle at the end of the day in warm water to remove excess product or debris around tips, valve, and internal tube.

Mechanical Settings

SHREDDER ASSEMBLY:

This unit is supplied with a shredder assembly; airlock/agitator speeds and is preset at the factory. **No** further sprocket setting speeds are needed, as this system will accommodate most insulations and applications. However, the shredder **direction** can be adjusted as described below.

SHREDDER ADJUSTMENT:

(Illust. 20)

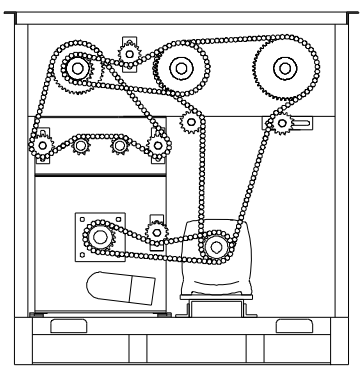

Unidirectional Rotation (Illust. 20) is preferred as an all-around setting for a combination of materials and applications. This setting provides for the greatest **coverage** and **best control** of the insulation in wall cavity spray, commercial spray, internal wetting (stabilized) and open blow applications.

(Illust. 21)

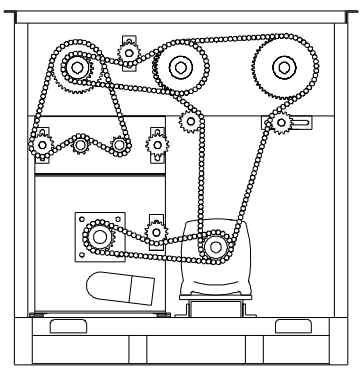

Center-Down Rotation (Illust. 21) force feeds the insulation into the airlock at a faster rate. This direction is preferred for the greatest **production** of various insulations in an open attic blow application although coverage may decrease.

TROUBLE SHOOTING

Problem	Corrective Action
1) Overload Ok light (orange) is off. (Illust. 22)	• Check generator - must be running • Check Main Disconnect **On** • Vacuum, Dry Airlock, Blower, or Recycle Airlock and vertical agt. motors may have overheated. Wait a few minutes to cool down. - Starters should automatically re-set and orange light will illuminate. (Except vacuum starter which must be manually reset) (Press 'green' power button to restart) • If 'orange' light does not illuminate...Vacuum thermal overload tripped. Turn off power at Disconnect switch. Open Main Panel box, press red reset bar on lower part of large starter. (C-10) (See electrical on page 31) • Light burned out. Turn Dry or Recycle mode switch to **Manual, Blower/Airlock**. If machine runs, light bulb needs replaced.
2) Power light (green) does not turn on when Power button is pressed. (Illust. 22)	• Kill switch(s) actuated; twist to release. • Make sure overload OK light is **ON** (see #1) • Light burned out. Turn Dry or Recycle mode switch to **Manual, Blower/Airlock**. If machine runs, light bulb needs replaced.
3) Remote doesn't work.	• Check both Dry and Recycle machine mode switch to be sure they are in **Remote** Position. (Illust. 22) • Make sure machine will run manually. • Check the 1 Amp transformer breaker. • Check remote control cord for continuity.
4) Wireless Remote doesn't work.	• Make sure Wireless is plugged in and there is 110 Volt power. • Try corded remote to confirm wireless Remote malfunction. If corded Remote doesn't work, see problem #3. • Replace batteries in transmitter.

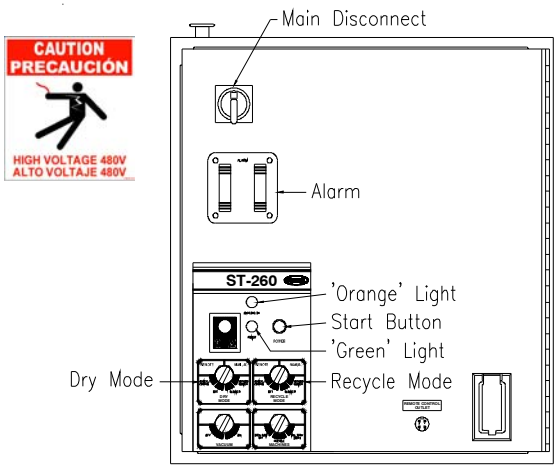

(Illust. 22)

Problem	Corrective Action
5) 110 Volt Outlets do not work.	• Make sure generator is on. • Make sure Main Disconnect Switch is **ON**. (See illust. 22 on page 23) • Check Circuit Breakers. (See illust. 16 on page 17)
6) Blower does not work.	• Turn Main Disconnect Switch off. Check main blower starter and manual thermal overload • Make sure 'orange' light and power 'green' lights are on. (See illust. 22 on page 23)
7) Recycle or Dry Airlock doesn't turn. 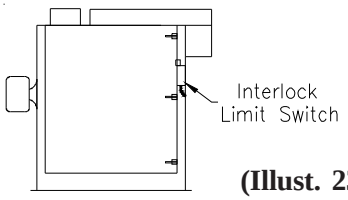 **(Illust. 23)**	• Check to make sure access door is closed and depress interlock switch. (Illust. 23) • If dry or recycle motor attempts to turn or chain jumps, **airlock** could be plugged. Turn machines switch to **Recycle**. Turn blower on High. Turn Recycle and Dry machine mode switch to **blower** and check for air coming out of either airlock. • With blower running on high (valves closed): jog each airlock to clear out debris.
8) Vacuum doesn't start. 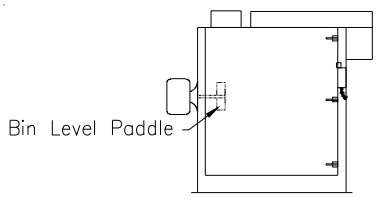 **(Illust. 24)**	• **Caution: Turn machine off before servicing.** Check recycle canister - full. (if full, unit will not run) • Bin level paddle clogged or restricted inside Recycle Machine canister. (Illust. 24) Jog by hand to release. • See problem #2.
9) Vertical Agitator on Dry recycle canister doesn't work	• 'Limit switch' must be depressed at access door on canister • Turn Main Disconnect Switch off. Check manual reset on motor starter in panel box.
10) Loss of air pressure.	• Check pressure relief valve located on positive displacement blower. **Caution: Stay clear of moving parts.** • Check all hose clamps from blower to machine for tightening.

Periodic preventive maintenance will add years of life to your equipment. Reviewing the information in this manual will go a long way in reducing downtime and lost income. **Note: The components of the lower base unit can be easily maintenanced and accessed through the access door outside the truck and by removing the side guards from the machine inside the truck!!**

CAUTION: TURN OFF MACHINE BEFORE PERFORMING ANY MAINTENANCE.

Daily

- Empty insulation from recycle unit at end of day.
- Check for excessive insulation build-up on recycle canister screen and scrape screen with a wire brush to remove any buildup. (Illust. 25)
- Check fluid levels (oil and coolant) on generator and clean filter.
- Close slidegates of Dry and Recycle Units to prevent build-up of material in the slidegate track.
- Empty bag from Filter System. (See illust. 8 on page 13)

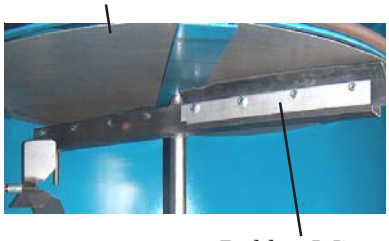

(Illust. 25)

Weekly

- Remove blower filter and blow with compressed air, replace if needed.
- Visually check chain tension on all drive systems.
- Clean out inside vacuum chamber.
- Blow off all motors.
- Blow out radiator and generator with compressed air.
- Grease vacuum and PTO shaft bearings with high speed grease. (See illust. 26 on page 26)
- Check and/or replace filter media in blower filter box.

Monthly

- Check vacuum motor pulley and belt tension.
- Check blower motor pulley and belt tension.
- Grease blower shaft bearings with high speed grease.
- Retighten nuts on PTO gear housing, which can loosen due to vibration.
- Check PTO pulley and belt tension.
- Check blower oil level and change after first 100 hours, then 1000 hours after.

Quarterly

- Grease agitator, airlock, and shredder bearings with high speed grease. (See illust. 26 on page 26)
- Check condition of airlock seals.
- Check all hoses and connections for leaks.
- Generator maintenance every (250 hours) - Check filters (air & fuel) and change oil and oil filter. (Refer to engine manual for correct oil and filters)

RECOMMENDED LUBRICATION

AIRLOCK, AGITATOR, AND SHREDDER BEARINGS:	GREASE: MOBILITH AW2 (NLGI grade #2)
DRIVE CHAIN:	DRY LUBRICANT (EG: DRY GRAPHITE)
BLOWER:	OIL: PNEULUBE (Refer to blower manual) GREASE: MOBILITH AW2 (NLGI grade #2)
VACUUM:	GREASE: MOBILITH AW2 (NLGI grade #2)
PTO BEARINGS:	GREASE: MOBILITH AW2 (NLGI grade #2)
AIRLOCK REDUCER:	OIL: MOBIL GLYGOYLE 460 POLYGLYCOL (PAG)

Bearing Grease Zerks

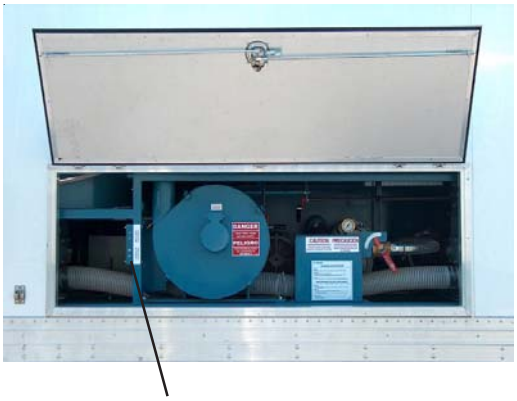

Vacuum & Blower 4
(2 per)

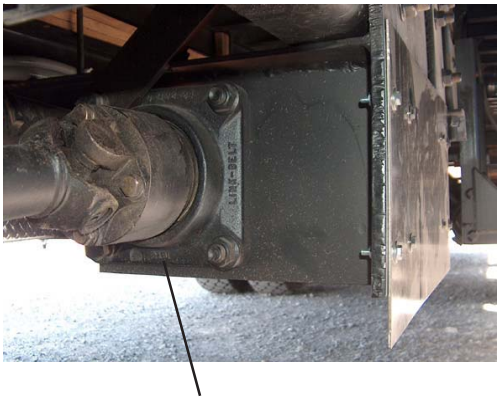

PTO Shaft 2
(1 per side)

Agitator 6
(3 per side)

Shredder 4
(2 per side)

Airlock 4
(2 per side)

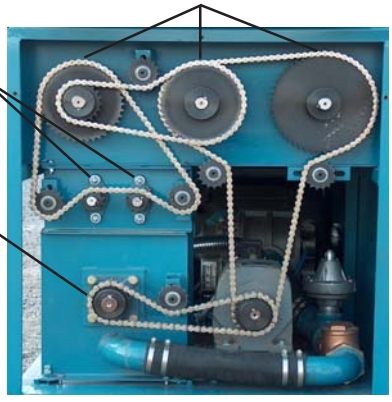

(Illust. 26)

Airlock: (Seal Replacement)

The purpose of the airlock seal is to trap air and insulation until it rotates 180° to the 6:00 o'clock position. At this point, insulation is pushed by air from the blower, out of the chamber. Worn or damaged seals allow air and insulation to escape back into hopper, thus reducing production and coverage. When it is necessary to replace seals, follow these directions: **(Note: When servicing the airlock seals of the Dry and Recycle airlocks, be sure to remove any hoses, cords, or other attachments first.)**

Remove chains and air hoses from both input and output of airlock. Using a 9/16" socket remove hold down bolts from airlock. Lower the front of the airlock down by loosening the jamb nuts and turing the liftbolts counter clockwise. Slide the airlock out of the machine. (Illust. 27) Airlock rotor plates that are damaged (bent) will need replaced. (Refer to Base Plate Replacement below.) Take out rubber seal by removing six plate fastening bolts and nuts and top plate. The base plate will remain attached to airlock shaft. To install a new seal, reverse procedure. Seal should be inserted tight against the back base plate, pressing the lower tabs of the seal down under the adjacent seal with a flat blade screwdriver. Make sure all bolt holes are aligned while each side of seal is equally pressed against the end plates, before tightening bolts. Seal should be bent backwards for **clockwise** rotation and forwards for **counter clockwise** rotation. (Illust. 28 and Illust. 29) **Note: Entire rotor plate assembly may be removed and replaced. This procedure maybe easier than replacing just the seals.** (See illust. 30 on page 28)

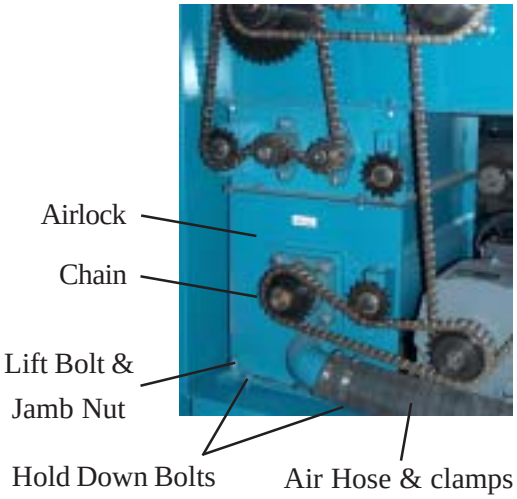

(Illust. 27)

Base Plate Replacement:

1. Remove damaged baseplate assembly from shaft using ratchet drive wrench with extension and 9/16" socket.
2. Check seal for wear and damage. (Installing seal and top plate on the bench is quick and easy). Remove bolts from plate assembly and replace with new seal. Make sure seal and top plate are assembled on **correct** side of base plate before assembling in airlock. Seal should press backward towards top plate when installed correctly into airlock chamber. (Illust. 28)

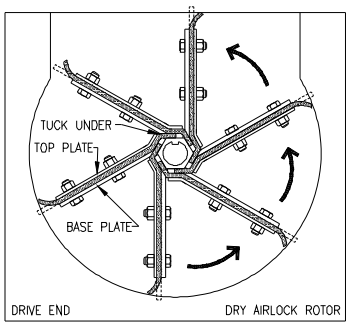

Dry Airlock (Illust. 28)

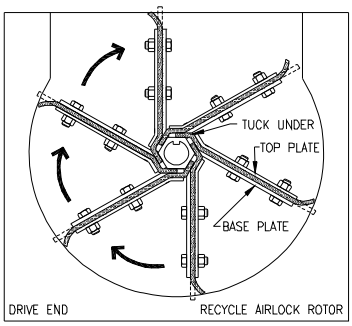

Recycle Airlock (Illust. 29)

3. Install the rotor plate assembly into the airlock. The dry airlock runs **counter clockwise** and the recycle airlock runs **clockwise** viewing it from the sprocket drive shaft. (See illust. 28 and 29 on page 27) Align the base plate with holes on airlock shaft using a tapered punch. **Caution:** Do not mount rotor plate backwards. If installed improperly, damage to seals will result and put undue stress on agitator motor. This causes overheating and poor production. Seal should be bent backwards to allow for a **clockwise** rotation and forwards for a **counter clockwise** rotation of rotor.
4. As rotor plate is installed, press bottom tab of seal under adjacent seal with flat blade screwdriver. (See illust. 28 on page 27)

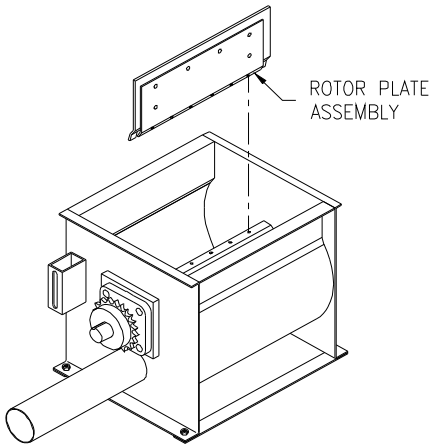

(Illust. 30)

Chain: (Adjustment) (#50 Nickel Plated)

A smooth operating chain drive should have a slight sag on the idler side of the chain. New chains should be installed under slight tension as they will elongate a small amount due to seating of pins and bushings during the first few days of operation. Chain should be kept in good condition by proper lubrication (use dry film lubricant Dow 321) and occasional cleaning. Soaking chain in container of 10 weight oil will provide for internal lubrication of pins and bushings. However, excess oil must be drained and wiped away as excessive lubrication will cause insulation accumulation on chain. Worn out chain should be replaced. When chain is replaced, worn sprockets should also be replaced, preventing further damage to new chain.

Sprockets:

Check Sprockets For Wear. Misalignment and/or loose sprockets and improper chain tension causes the premature wear of chain and sprockets. All sprockets, except speed reducer and idler sprockets, have been secured with a medium grade Loctite (general purpose thread locker), to prevent gradual movement. The set screws and key are also inserted with a medium grade Loctite. If sprocket is difficult to remove, it may be heated with a propane torch to loosen.

Caution: Do not overheat sprocket or damage to bearing will result. A pulley or bearing puller can then be used to remove the sprocket and key. Replace new sprocket on shaft with key and medium grade Loctite applied to shaft. Align sprocket with corresponding sprocket, using a straightedge placed along face of teeth and tighten set screws.

Bearings:

Agitator Bearings in hopper are prelubricated, double-sealed, self aligning ball bearings. Some bearings do not have grease fittings and are lubricated for life. Others have grease fittings and should be periodically lubricated at least every 3 months. If bearings produce noise or heat *(too-hot-to-touch)*, the bearings should be replaced.

Agitator, Airlock, Shredder, and Vacuum Bearing Replacement:

Remove sprocket (See SPROCKET section above). Remove the four bolts from bearing flange (two bolts from shredder bearing flange). Loosen set screws on bearing hub at each end of agitator shaft. Since all set screws are installed with a medium grade Loctite, a propane hand torch maybe used to assist in removing them. Do not overheat unit, causing shaft to expand. Using a rubber mallet, drive agitator shaft an inch in one direction,

creating a space between hopper and bearing unit. A bearing puller can then be used to remove the bearing. Eliminate any metal burrs from shaft with file and install new bearings with felt seals. Use a medium grade Loctite on set screws before securing bearing to shaft. (Check shaft diameter before ordering bearings)

Agitator, Airlock, Shredder and Vacuum Bearings are prelubricated, double sealed, self aligning ball bearings. Lubrication is required at three month intervals of normal running time, or sooner if bearings produce a noise or become too-hot-to-touch. **(Note: Make sure a high speed / high temperature grease is used on vacuum bearings weekly.)** Relubrication at the agitator, airlock and shredder grease fittings is done with a lithium base grease conforming to a NLGI GRADE TWO consistency. The grease should be pumped in slowly until a slight bead forms around the seals. This bead, in addition to acting as an indicator of adequate lubrication, provides additional protection against the entry of foreign matter. **Important:** If a slight bead of grease does not form around bearing, this indicates a failure of lubrication**.** If bearing shows signs of wear, replace bearing.

Speed Reducer: (Lubrication)

If speed reducer malfunctions because of improper oil level or type used, **warranty is voided**. Your speed reducer has been filled with Mobil Glygoyle 460 Polyglycol (PAG) lubricant. Consult speed reducer manufacturer's manual for lubricant replacement intervals.

LUBRICATION: This speed reducer was filled with oil at the factory to operate within -10°F to +120°F ambient temperature range. LeCentric units utilize extreme pressure lubricants which protect the teeth in the event of the oil thinning out due to local temperature rise, or high pressure due to accidental overloads. The reducer is lubed for life and does not require regular oil changes under normal industrial operating conditions and environments. Oil changes may be required if the reducers are operated in severe environments (i.e. high or low temperatures, high altitudes, dusty, caustic, etc.)

Agitator Motor:

If agitator motor runs hot, activating the manual reset located in main panel box, or if unit does not run properly, refer to troubleshooting sections of manual. The agitator motor should start quickly and run smoothly. If not, shut motor off **immediately** and check the cause. Low voltage, incorrect power supply, bad bearings, or misconnected wiring could cause motor failure. **These conditions void the motor warranty.** Overload conditions can be detected by checking the electrical current (amperage) compared with nameplate current (amperage) located on the body of the motor. **Note:** Agitator motor should only be operated with steady or constant flow of electricity between 460-480 volts.

Agitator Motor Replacement:

Remove conduit and wires from inside Main Control Panel. (note wire locations for easy hook-up) Remove drive chain and place a support block under motor to reduce stress while removing four reducer flange bolts with a 9/16" socket wrench. (If rear bolts are difficult to reach, remove reducer unit from lower frame for better access.) Pry motor from speed reducer a slight distance, using two large flat blade screwdrivers placed in the slots (180° apart) where they join together. Pull motor unit straight away from speed reducer, retaining key. (See illust. 31 on page 30) Install replacement motor and connect conduit and wires to Main Control Panel. (refer to old motor wire locations

for easy hook-up) Check for PROPER ROTATION of **motor** output shaft (**clockwise** for recycle and **counter clockwise** for dry facing output shaft). If motor rotation is incorrect, switch two of the three black wires. Rotate keyways of motor shaft and quill (input) of speed reducer to 12:00 o'clock position. (To turn speed reducer shaft, chain on output of speed reducer will need to be removed.) Assemble the key 3/4 inch in from the end of the motor shaft and coat motor shaft with anti-seize compound. Align and insert the motor shaft carefully into the input quill. (A flat blade screwdriver may be helpful to keep key in place as motor shaft is inserted.) Secure to flange with four hex bolts.

Caution: If the motor does not readily seat itself, check to determine if **key** has moved axially along motor shaft, causing interference. Tightening motor to reducer with excessive pressure against key will cause premature bearing failure and overheating of motor. Turn motor on and check for correct rotation of **speed reducer** output shaft (**clockwise** for recycle and **counter clockwise** for dry). Reconnect drive chain and assemble unit for manual operation.

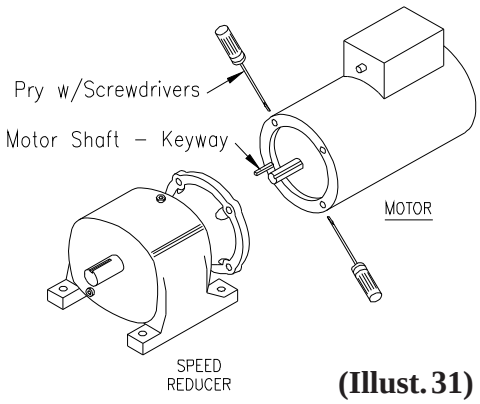

(Illust. 31)

Blower Module: Motor and Blower

Periodically remove Blower Filter and vacuum any material that has accumulated around blower motor. Blow out any remaining debris around motor and intake orifice of fan with compressed air. This will extend the life of the blower significantly. Blower Filter life can be extended by occasional removing and back or reverse blowing through with compressed air. Filter should be replaced periodically depending on use. If blower produces noise or heat, refer to troubleshooting section of manual.

Check belt tension and possible air leaks in the hose line to the machines. Check for secure clamps. Check and/or change oil (PneuLube) in the blower pump housing. Refer to owners manual (separate component literature.) Drain ports are located at the rear of blower housing. **Note:** Blower should only be operated with steady or constant flow of electricity between 460-480 volts.

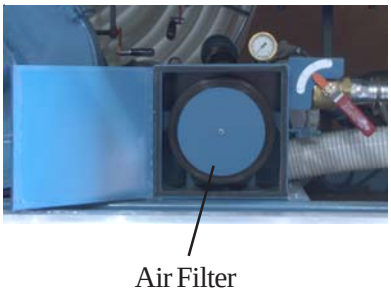

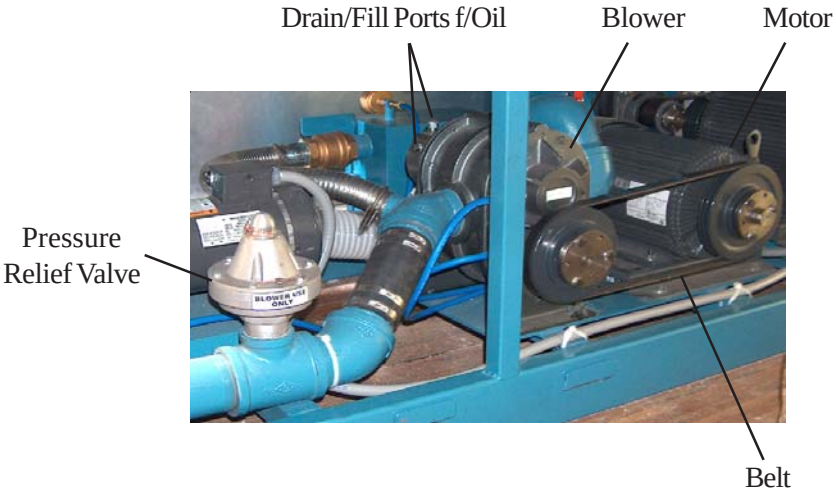

(Illust. 32)

Electrical Diagram:

Periodically, disconnect machine from power source and check all electrical connections and components for broken or loose wires.

KS-260 CONTROL
PANEL DOOR (Inside)

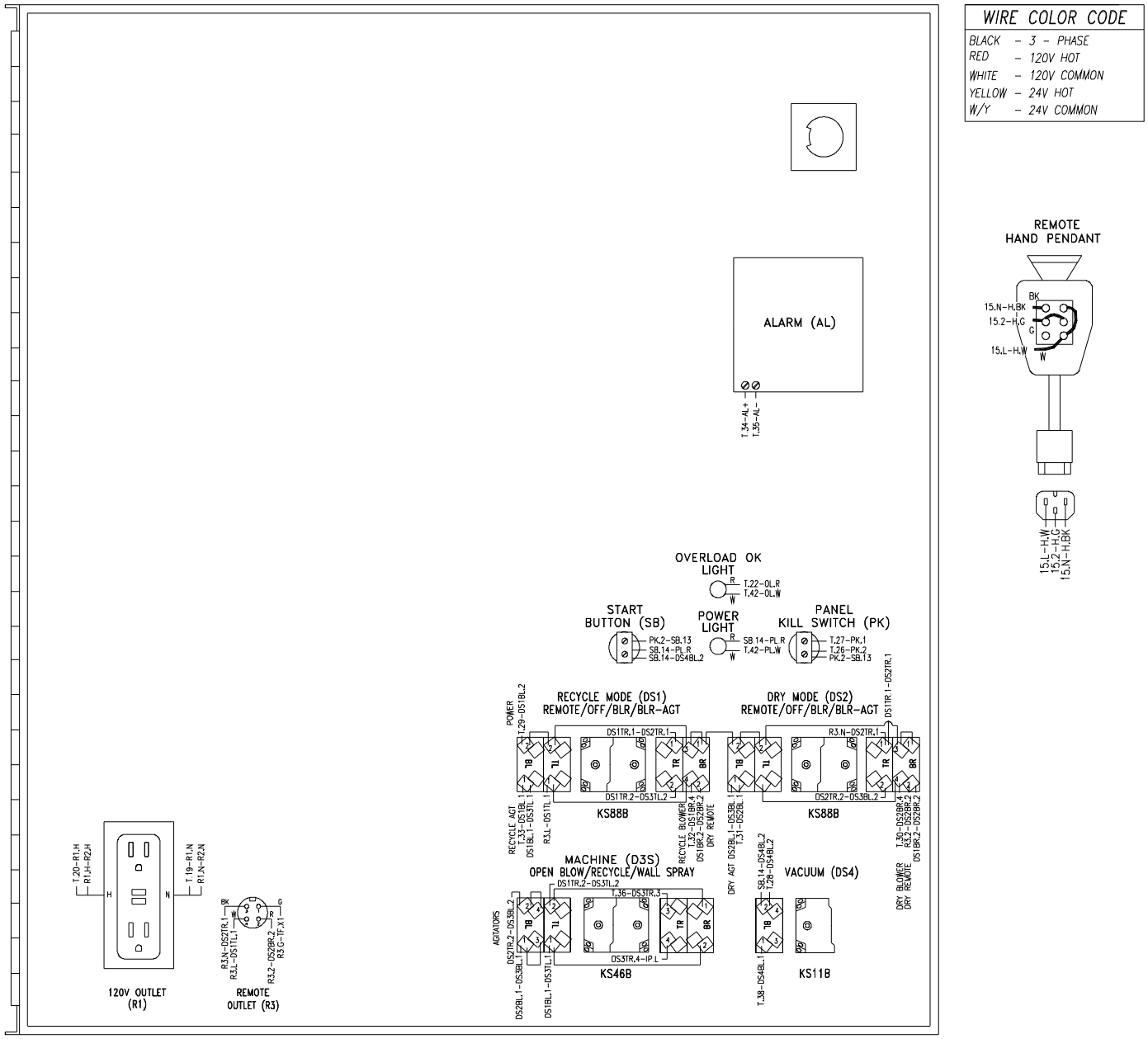

Electrical Diagram:

Periodically, disconnect machine from power source and check all electrical connections and components for broken or loose wires, and loose screws on contact points.

KS-260 CONTROL PANEL BOX

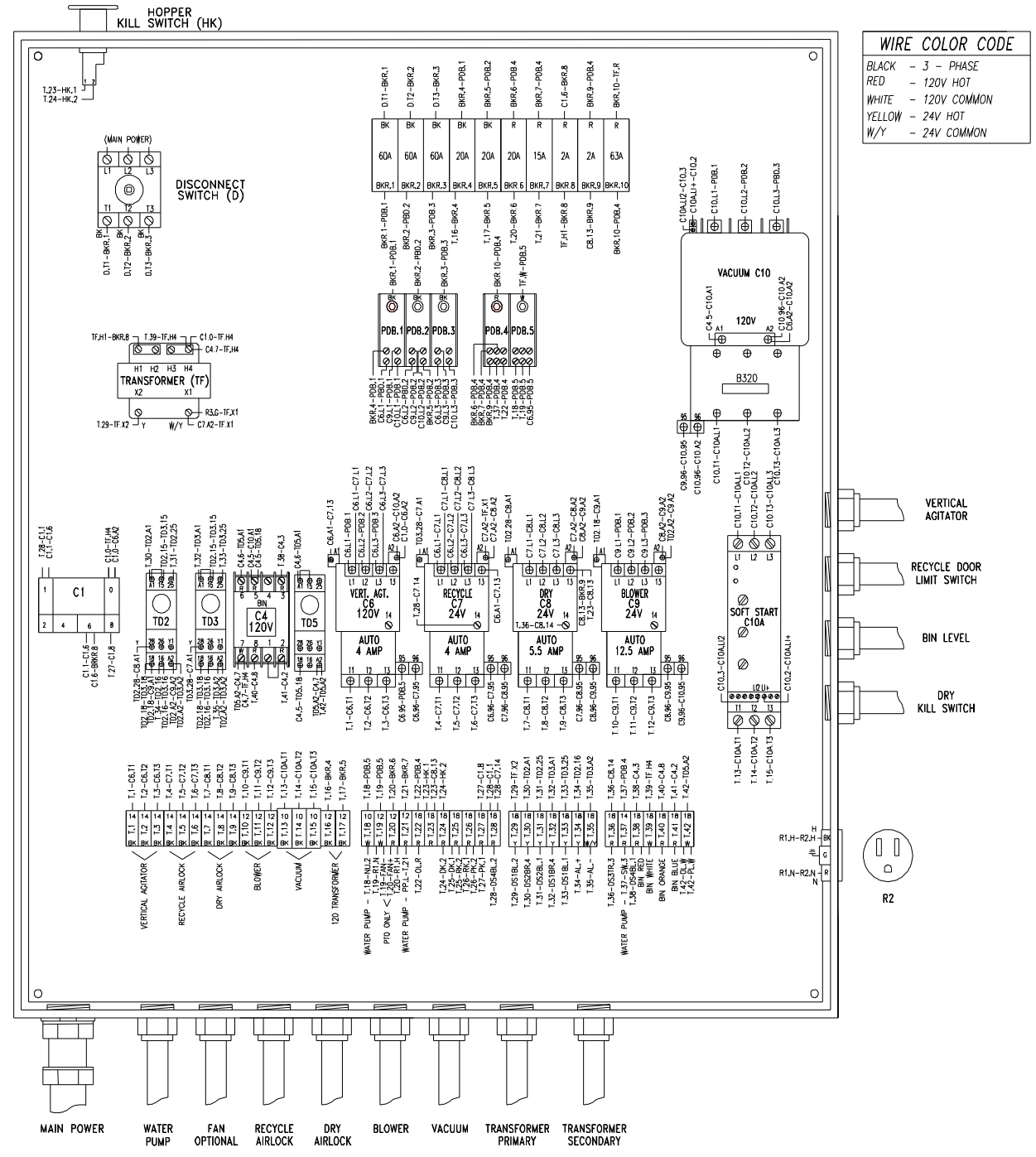

Electrical Diagram:

Periodically, disconnect machine from power source and check all electrical connections and components for broken or loose wires, and loose screws on contact points.

KS-260 PUMP CABINET

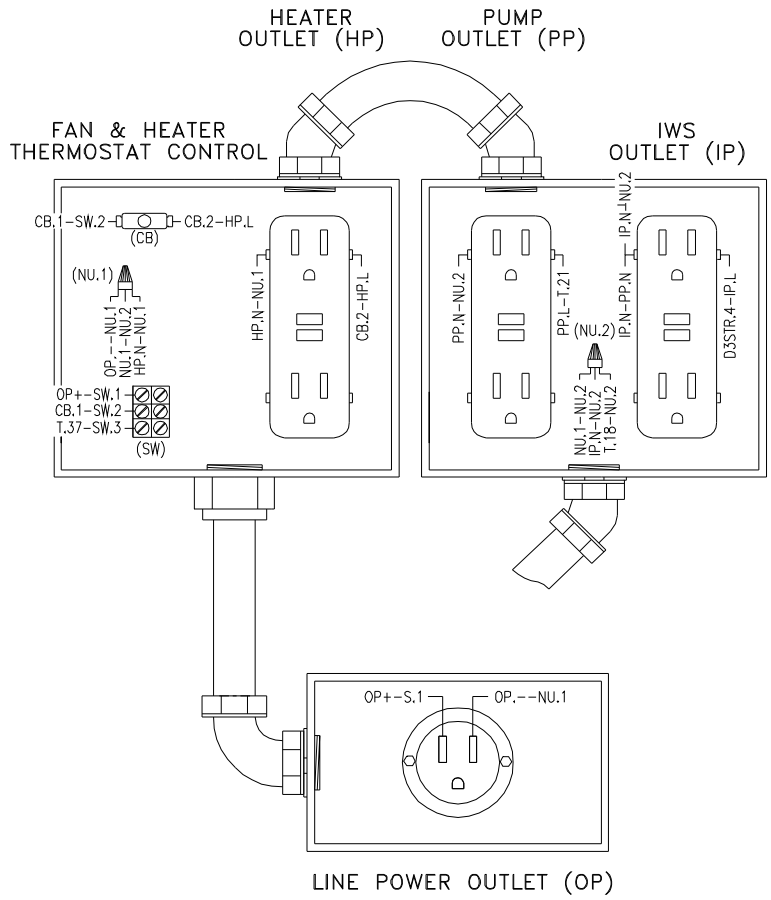

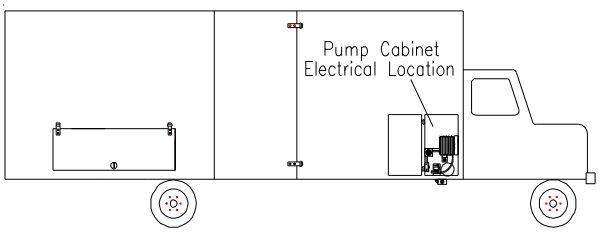

KS-260 ASSEMBLY

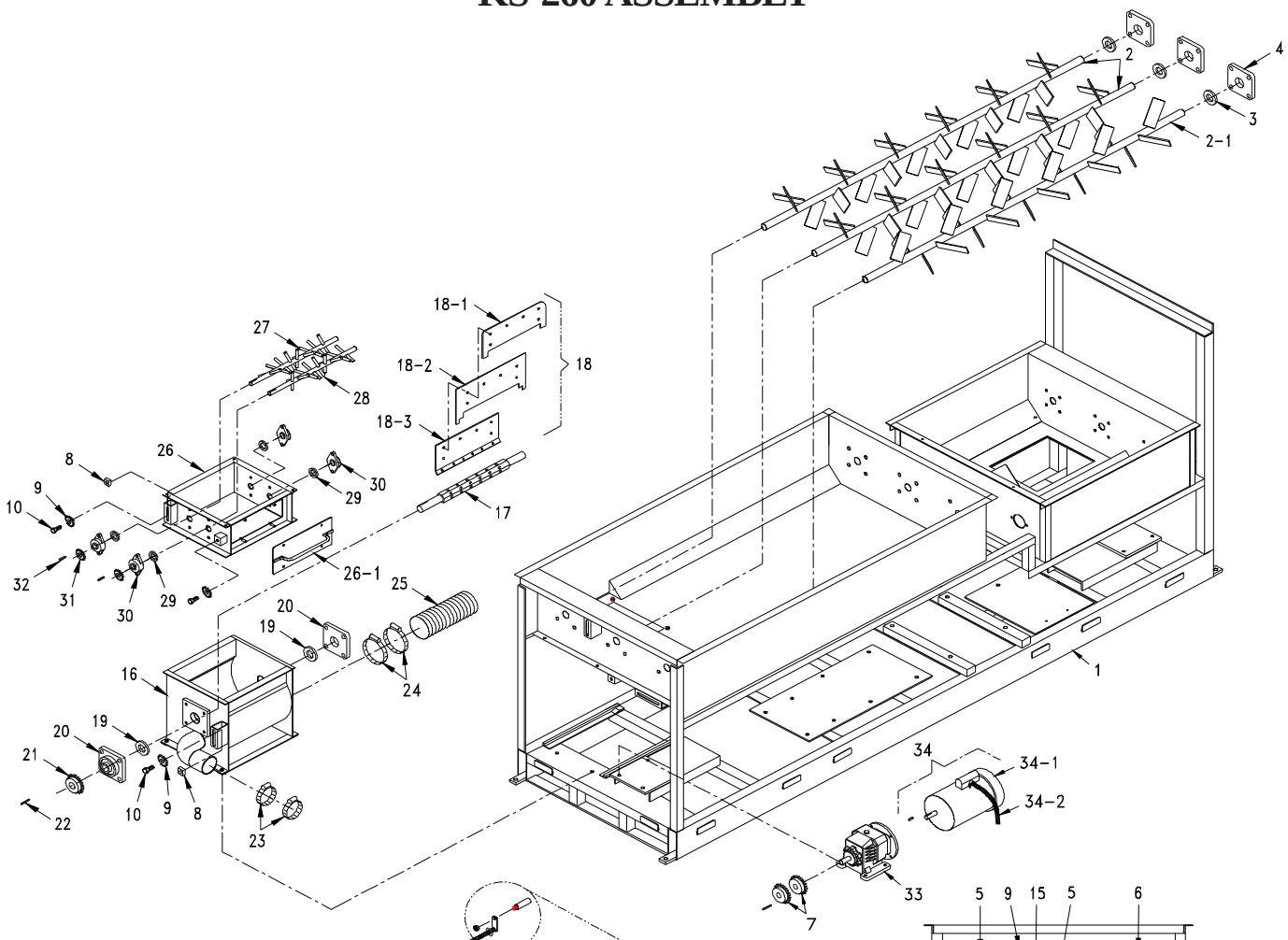

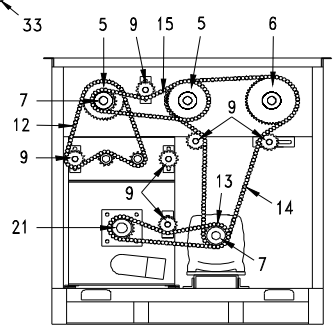

Center - Down

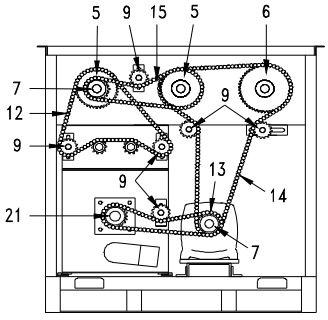

Unidirectional

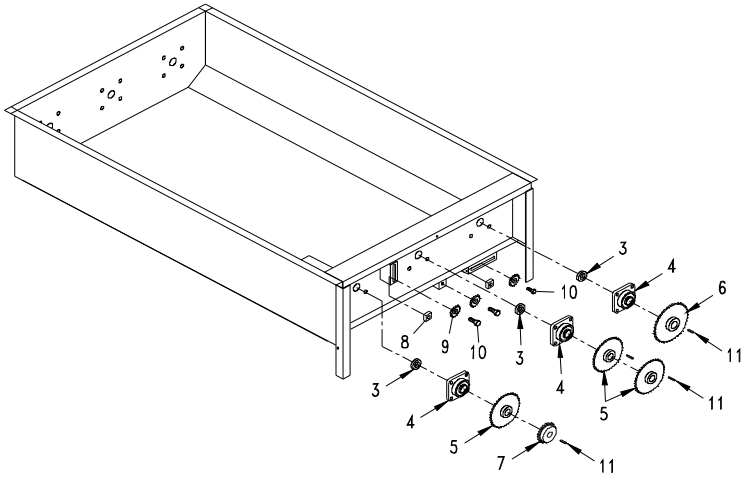

KS-260 ASSEMBLY

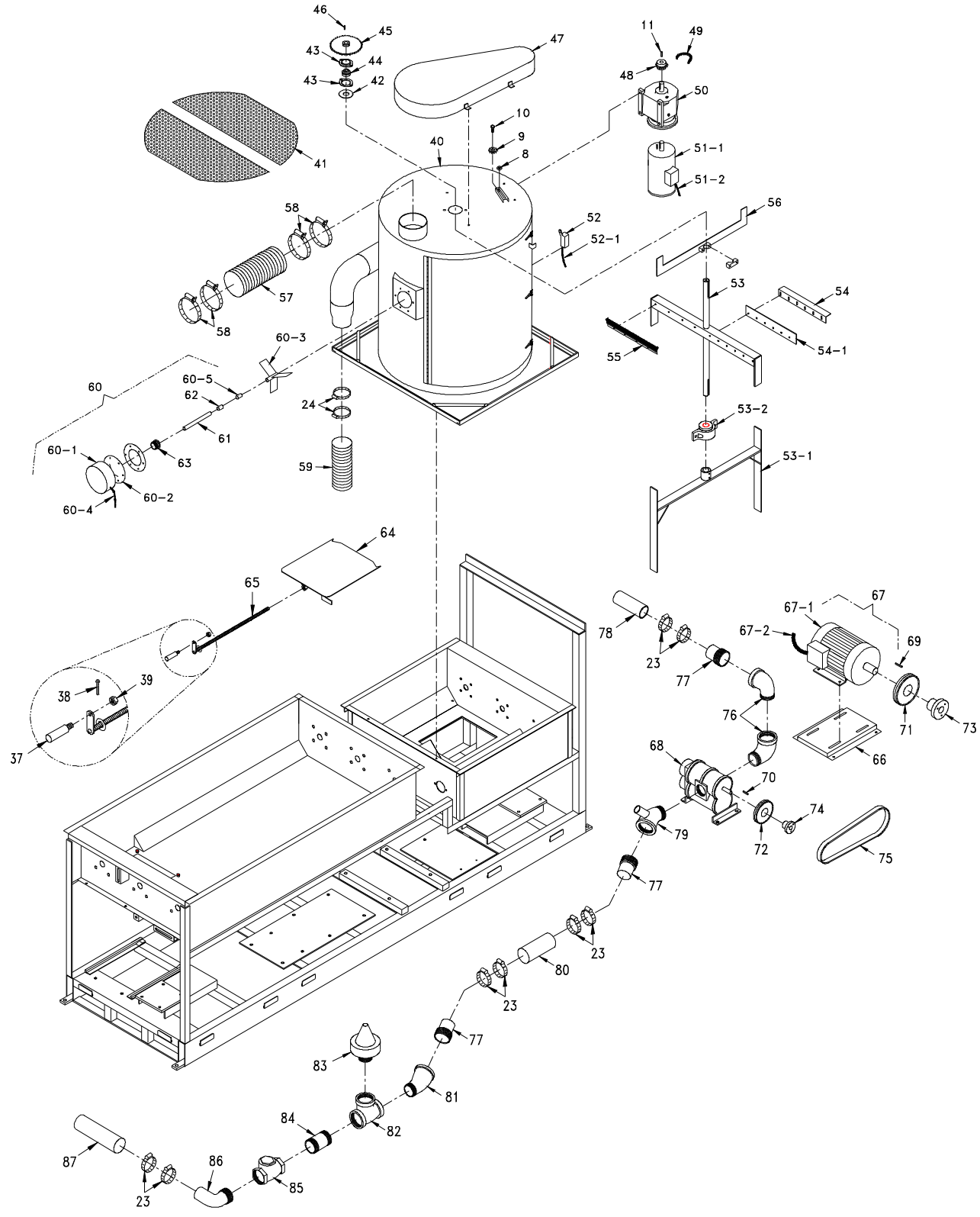

KS-260 ASSEMBLY

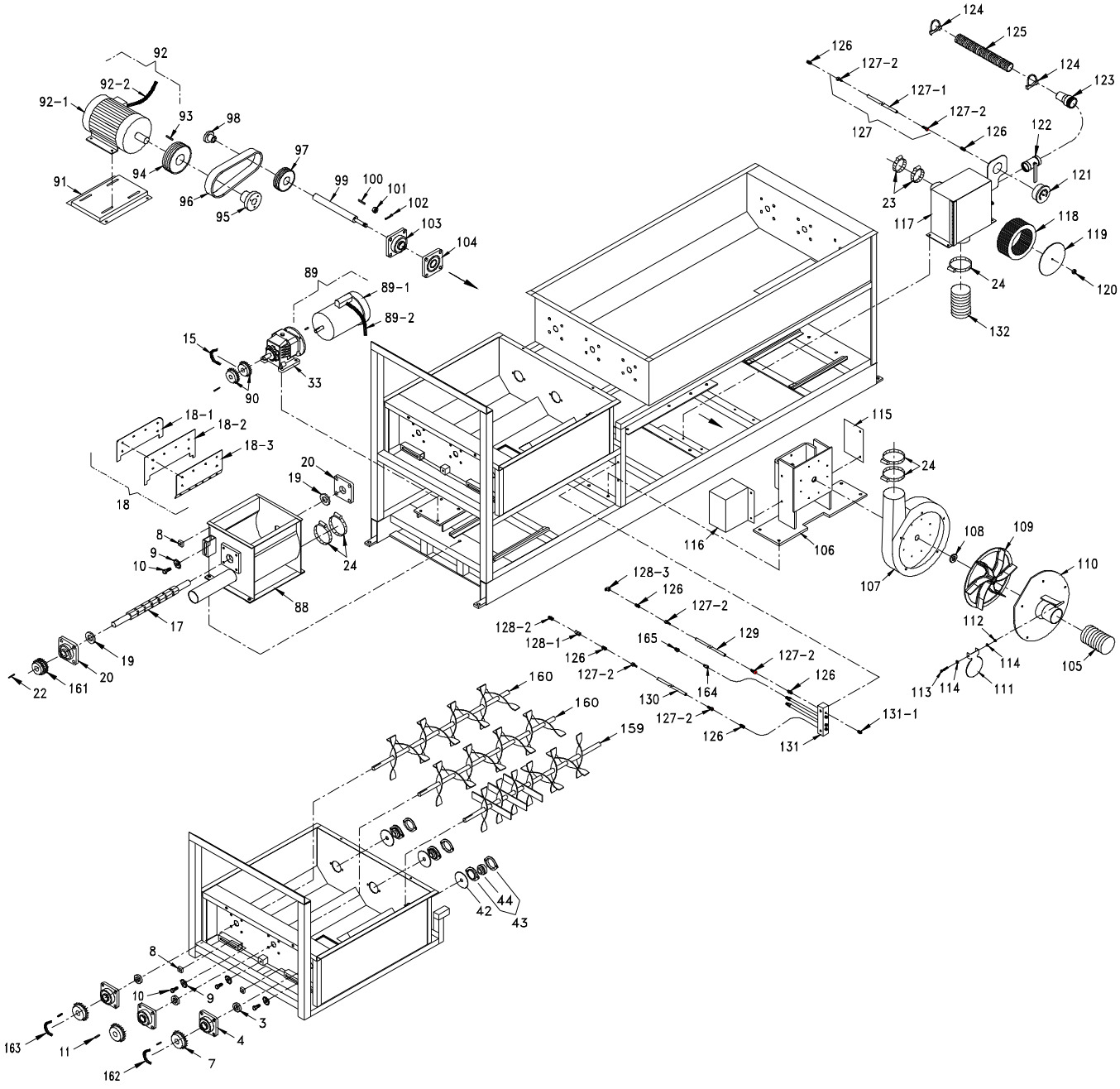

KS-260 ASSEMBLY

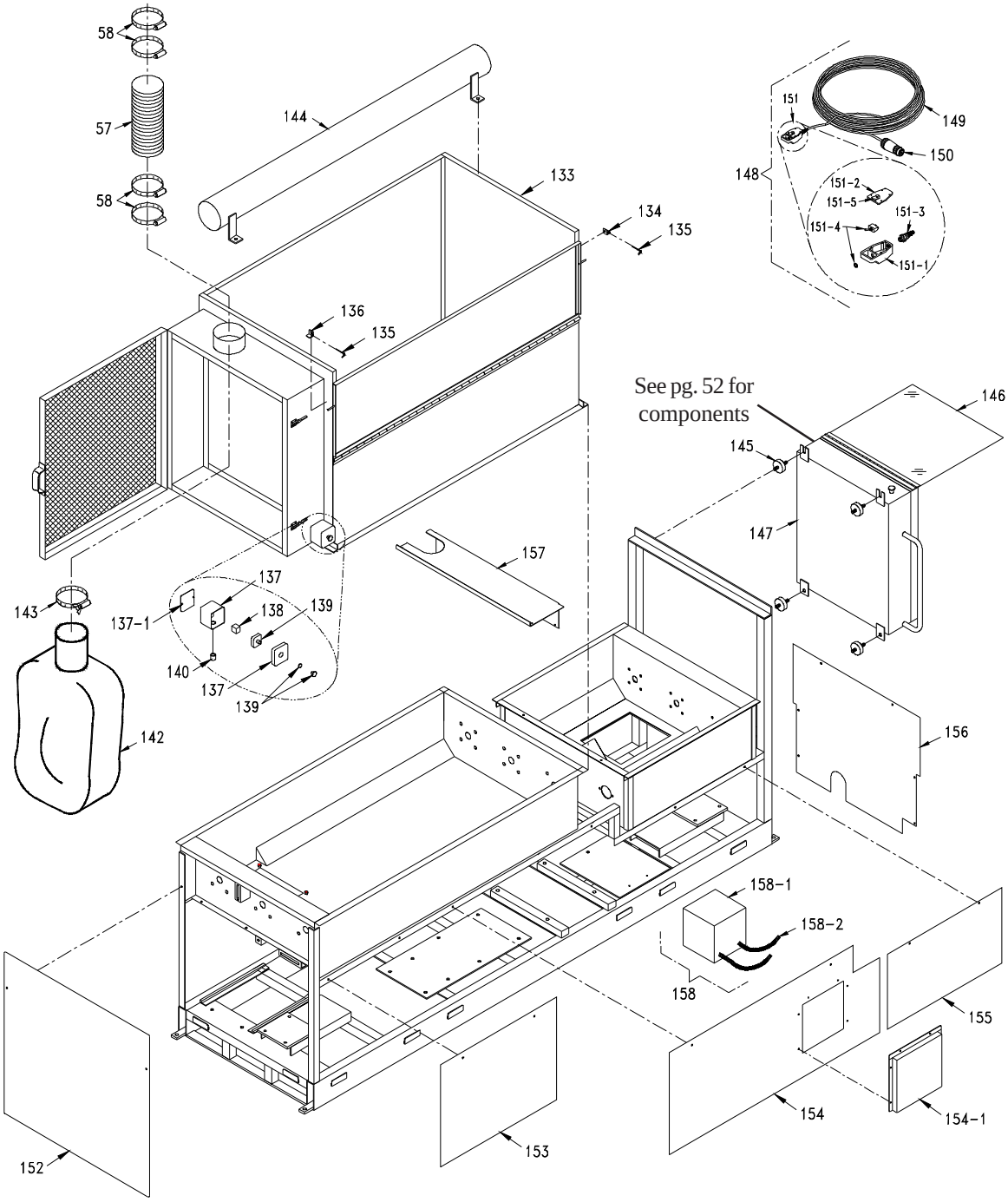

KS-260 Exploded Parts List

Item#	Part#	Description
1	260101-R1	Base
2	260103	Agitator, Middle & Shredder (2)
2-1	260104	Agitator
3	250503-7	Seal, Felt, 1 1/4" (9)
4	250503-8	Bearing, Flange, 4-Bolt, 1 1/4" (9)
5	5200-42	Sprocket, #50 40T x 1 1/4"HT (3)
6	260108	Sprocket, #50 50T x 1 1/4"
7	250504	Sprocket, #50 20T x 1 1/4" (6)
8	40052	Nut, 1" x 1" x 1/2" (Plated) (8)
9	150513	Sprocket #50, Idler, 15HT x 5 (11)
10	FSB120	5/8" X 3/4" Shoulder Bolt (11)
11	561	1/4" x 1/4" x 1" Key (7)
12	200500-8	Chain, #50 x 46" Long (Center Down)
12	109808	Chain, #50 x 53 1/2" Long (Unidirectional)
13	2502028	Chain, #50 x 41" Long
14	5200-112	Chain, #50 x 80" Long
15	109804	Chain, #50 x 42" Long (3)
16	4200-5	Chamber, Airlock, 4200
17	4200-6	Shaft, Airlock, 4200 (2)
18	4200-9-ASSY	Seal Assy, 4200, 14" (Rhino) (12)
18-1	4200-7	Plate, Top, Airlock (12)
18-2	4200-9M-2PLYF	Seal, Airlock (12)
18-3	4200-8	Plate, Bottom, Airlock (12)
19	8065-3	Felt Seal, 1 1/2" (4)
20	8065-2	Bearing, 4-Bolt, 1 1/2" (4)
21	5200-43	Sprocket, #50 20T x 1 1/2"
22	556	3/8" Square Stock, 1 1/4" Long (2)
23	339A	Clamp, Hose, 3" (12)
24	340	4" Hose Clamp (9)
25	H330	Hose, 4" Flexhaust, 7' Long
26	4200-10-R1	Shredder Box
26-1	4200-67	Shredder Box Access Cover
27	4200-11-A	Shredder Agt., Short (18 Tine)
28	4200-11-B	Shredder Agt., Long (20 Tine)
29	517-7	Seal, Felt Airlock 1" Bore (4)
30	8036-2	Bearing, 2-Bolt, 1" (4)
31	8037	Sprocket, #50, 11T x 1" (2)
32	448Z	Key, 3/16" x 3/16" x 7/8" (2)
33	250529-A	Reducer, Gear (2)
34	2601000	Motor Assy, 3 Hp., 3 Phase
34-1	2502007	Motor, 3 H.P.
34-2	543-M-75	Conduit, 1/2" Flexible, 13' Long
35	260105	Slidegate, Dry
36	260106	Crankrod w/handle bracket, Dry
37	5200-60	Handle (2)
38	FSB078	Pin, Cotter, 1/8" x 1" (2)
39	FN015	N 3/8-16 Lock Nut-Crimped (2)
40	260202-R1	Canister, Recycle
41	260214	Screen, Canister (2)
42	250503-5	Washer, Felt 3 1/2" O.D. x 1 1/8" (4)
43	250503-4	Flange, 1 1/4" (8)

KS-260 Exploded Parts List

Item#	Part#	Description
44	250503-6	Bearing Insert 1 1/4" (4)
45	250515	Sprocket, #50 60T x 1 1/4"
46	562Z	Key, 1/4" x 1/4" x 1 1/4"
47	250520	Guard, Chain
48	S-50BS14-A	Sprocket, #50 14T x 1"
49	250500-1	Chain, #50, 66" long
50	575GB	Reducer, Gear
51-1	250514-1	Motor, 1 H.P., 3 Phase
51-2	543-M-75	Conduit, 1/2" Flexible, 36" Long
52	250523-1	Limit Switch
52-1	543-M-75	Conduit, 1/2" Flexible, 48" long
53	260203-R2	Agitator, Vertical
53-1	260204-R2	Bottom Tine, Agitator, Vertical
53-2	250513-1	Bearing, 1 1/4" P.B.
54	250513-4-4	Wiper, Vertical Agitator
54-1	250513-2	Wiper Strip, 2-PLY (2)
55	250512-28	Brush, Wiper
56	250513-6	Plate, Wiper
57	H435	Hose, 6" Flex-Thane, 2' Long (2)
58	341	6" Hose Clamp (8)
59	H420	Hose, 4" Spiralite, 23" Long
60	260523-ASSY	Bin Level Indicator Assy
60-1	260523	Bin Level Indicator
60-2	260523-1	Bin level, Side Plate
60-3	260523-3	Paddle, Indicator
60-4	543-M-75	Conduit, 1/2" Flexible, 6' Long
60-5	260523-2	Coupler, Bin Level
61	150523-4	Nipple, Pipe 1/4" x 3-1/2"
62	150523-5	Coupling, Pipe 1/4"
63	250527-1	Plug, 1-1/4" Nylon w/ 3/4" Hole
64	260206	Slidegate, Recycle
65	260207	Crankrod w/handle bracket, recycle
66	150315-1	Mount, Motor
67	260306	Motor Assy, 10 H.P., 3 Phase
67-1	250300-8	Motor 10 H.P., 3 Phase 1750 r.p.m
67-2	543-M-75	Conduit, 1/2" Flexible, 10' Long
68	250300-1	Blower, Rotary Positive Pressure Blower (4007)
69	260582	Key, 5/16" x 5/16" x 2"
70	449-R1	Key, 3/16" x 3/16" x 1 7/8"
71	250300-3	Pulley, 2Q3V80
72	250300-4	Pulley, 2Q3V69
73	250300-5	Bushing, Q1 1 3/8"
74	250300-6	Bushing, Q1 7/8"
75	250300-21	2V-Belt, 56" (2/3VX560)
76	8305SB-1	Elbow, Street, 3", 90 Degree (2)
77	5200-62	Adapter, Male Hose (3)
78	RM-OTH095-MI	Hose, 3" Radiator, 9" Long
79	260309	Elbow w/bleed off, Street, 3", 45 Degree
80	RM-OTH095-MI	Hose, 3" Radiator, 7" Long
81	260303	Elbow, Street, 3", 45 Degree
82	260311	Tee, 3" x 3" x 2"

KS-260 Exploded Parts List

Item#	Part#	Description
83	4200-12	Relief Valve, Pressure, 6 PSI
84	260310	Nipple, 3" Pipe, 7" Long
85	250539	Check Valve, 3"
86	5200-66	Elbow, Pressure Gauge
87	RM-OTH095-MI	Hose, 3" Radiator, 15" Long
88	260201	Airlock, Recycle (4" Input & 3" Output)
88	260201-A	Airlock, Recycle (4" Input & 4" Output)
89	2601100	Motor Assy, 2 H.P., 3 Phase
89-1	150509-1	Motor, 2 H.P., 3 Phase, 480V
89-2	543-M-75	Conduit, 1/2" Flexible, 48" Long
90	250503-10	Sprocket, #50 25T x 25T x 1 1/4"
91	250315	Motor Mount Assy
92	260404	Motor Assy, 15 H.P., Phase
92-1	250321-1	Motor 15 H.P., 3 Phase (3500 rpm)
92-2	543-M-75	Conduit, 1/2" Flexible, 6' Long
93	250332	Key, 3/8" x 3/8" x 2 7/8"
94	250369	Pulley, Motor (43V6.9)
95	250370	Bushing 15 H.P. Motor (1 5/8" Bore)
96	260386	V-Belt, 4 Groove V 33 1/2"
97	260387	Pulley, 4.7" Dia. 4 Groove, 15 H.P. Vac Shaft
98	260388	Bushing, 1 7/16", 15 H.P. Vac Shaft
99	260503	Shaft, Fan, 14", Vac. Chamber 15 H.P.
100	109080	Key, 1/4" x 1/4" x 2 1/8"
101	FN034	Slotted Nut, 1"-14
102	150310	Pin, Cotter, 1/8" x 2"
103	260385	Bearing, 4 Bolt Housing (Fixed)
104	260385-1	Bearing, 4 Bolt Housing (Expansion)
105	H401	Hose, 4" Novaflex, 16 1/2 Ft
106	260401-R2	Stand, Vacuum
107	260402-R2	Chamber, Fan
108	250306	Spacer, 2-Ply Rubber
109	260409-R1	Fan, Vacuum
110	260403-R2	Cover Plate, Chamber, Fan (4" to 5" Input)
110	260403-A	Cover Plate, Chamber, Fan (6" Input)
111	GV100-18	Guard, Inlet (4" to 5" Input)
111	2601300	Guard, Inlet (6" Input)
112	FN005	N 1/4-20 Lock Nut-Crimped
113	FSB067	SB 1/4-20 x 3 1/4" HMS
114	FW003	W 1/4" Flat Washer (2)
115	260406	Guard, Belt, Vacuum (6" x 9")
116	260407	Guard, Belt, Vacuum (Bent)
117	260301	Filter Box, Blower
118	81-1063	Filter, F/250300-2-R1 (Blue)
119	5200-63	Cover, Filter
120	FN014	5/16-18 Locknut-Crimped
121	260301-7	Guage, Pressure, 0-10 PSI
122	8051	Ball Valve, 2"
123	5200-81	Adapter, 2" Barb
124	5200-106	Muffler Clamp (2)
125	RM-OTH103-MI	Pipe, Exhaust Flex, 22" Long
126	IWS-32	Male Connector (10)
127	IWS-25A	Water Line, 1/4" x 6" w/swivel
127-1	IWS-H-1/4	1/4" Hose, 6' Long

KS-260 Exploded Parts List

Item#	Part#	Description
127-2	IWS-29	Swivel, SAE 37 (10)
128-1	IWS-12	Coupler, 1/4", Brass (2)
128-2	IWS-40	Nipple, Reducing, 1/4" to 1/8" (2)
128-3	IWS-41	Elbow, Reducing, 1/4" to 1/8" (2)
129	IWS-H-1/4	1/4" Hose, Vacuum, 24" Long (2)
130	IWS-H-1/4	1/4" Hose, Blower, 80" Long (2)
131	260700	Grease Block
131-1	- -	Grease Zerk (4)
132	H330	Hose, 4" Flexhaust
133	260110	Hopper Extension w/Filter Box
134	109078-1E	Finger Bracket RH
135	102020	Latch Finger (2)
136	109078-1D	Finger Bracket LH
137	8076	Enclosure
137-1	4000-47	Spacer Block
138	8075-1	Contact Block
139	508-2	Killswitch
140	543-M-18	Connector, Conduit, 1/2" Straight
142	FB250-2	Bag, Filter
143	150522	Clamp, Hose, 6" w/wingnut
144	260600	Overhead Tube
145	2502029	Vibration Isolater (4)
146	251080-51	Rain, Cover (Lexan)
147	260302-KT	Electrical Box Assembly
148	RC395-K	Cord, Remote Control, 4 Pin Connector 150 Ft.
149	18-4 SJ	Cord, #18-4(SJ) x 150 Ft.
150	487	Connector, 4 Pin Male
151	RC395-DPDT	RC Service Kit (DPDT)
151-1	RC395-1	Switch Housing, Remote Control
151-2	RC395-2	Switch Back Plate w/Clip, Remote Control
151-3	1536-4	Strain Relief
151-4	109066-9	Switch, Toggle (DPDT)
151-5	1536-7	Clip, Belt
151-6	KMC-087	Decal, Feed Blower (Not Shown)
151-7	RC395-4	8-16 Plastite Screw (4) (Not Shown)
152	260109	Guard, Chain, Dry
153	260307	Guard, Side, Short Blower
154	260308-R1	Guard, Side, Long Blower & Vacuum
154-1	260312	Guard, Vacuum Motor
155	260212-R1	Guard, Side, Recycle
156	260210-R1	Guard, Chain, Recycle (3" Output)
156	260210-A-R1	Guard, Chain, Recycle (4" Output)
157	260405-R1	Guard, Top, Vacuum
158	2601200-ASSY	Transformer Assembly, 10 KVA
158-1	151010	Transformer, 10 KVA
158-2	543-M-75	Conduit, 1/2" Flexible, 5' Long (2)
159	250503-2-T	Agitator, Shredder
160	250503-3-T	Agitator, Standard (2)
161	2602025	Sprocket, #50 20T x 25T x 1 1/2"
162	200500-8	Chain, #50 x 46" Long
163	50NP-58.5	Chain, #50 x 58.5" long
164	260700-1	Grease Hose Fitting
165	260700-2	Adapter, 1/4-28 Male

WATER PUMP ASSEMBLY

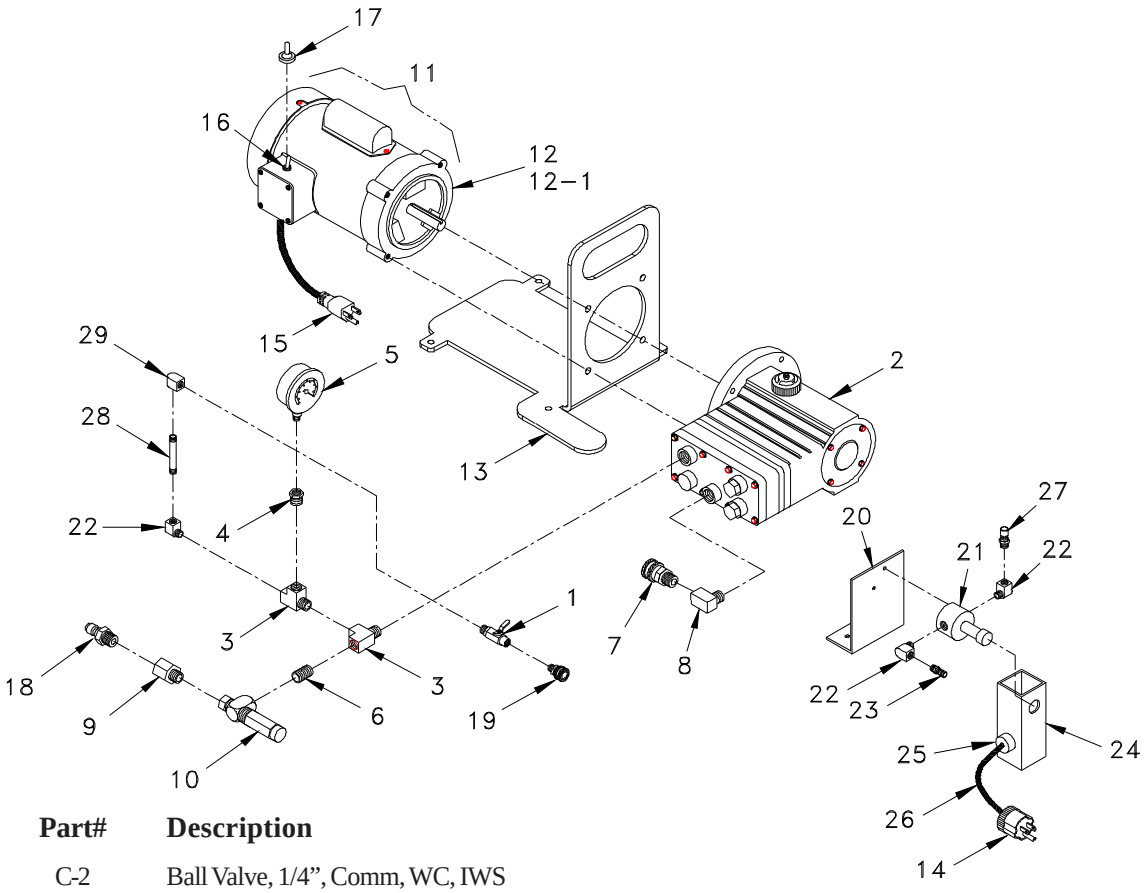

Item#	Part#	Description
1	C-2	Ball Valve, 1/4", Comm, WC, IWS
2	M-03	M-3 Diaphragm Pump
3	P-1B	Street Tee, 3/8" (2)
4	P-1C	Bushing, 1/4" to 3/8"
5	P-1D	Pressure Guage, 0-600 P.S.I
6	P-1G	Close Nipple, 3/8"
7	P-1H	Coupler, Female, QD, 1/2", P&M Assy (2)
8	G-P-16	Elbow, 1/2" Brass, Street
9	P-1J	Adapter, 1/2" to 3/8"
10	P-1K	Pressure Regulator, 3/8"
11	P-2C-ASSY	Motor, 1 H.P. Assy, 1-Phase
12	583	Motor, 1 H.P. 120/230 V., 60 Hz.
12-1	585	Motor, 1 H.P. 120/230 V., 50 Hz.
13	M-03-BASE	Base, Pump Mount
14	127	Plug, NEMA #5-15P
15	129	Cord, Molded Plug, 3 Ft.
16	1536-3	Switch, Toggle (SPST)

Item#	Part#	Description
17	251080-63	Cover f/Toggle Switch
18	P-14	Nipple, Male, QD, 1/2" MPT
19	W-2	Coupler, Female, QD, 1/4"
20	ST250-IWS-3	Mounting Bracket, IWS
21	IWS-4C	Solenoid Valve, 300 PSI
22	IWS-38	Elbow, 1/4" Brass (3)
23	IWS-32	Male Connector
24	IWS-4D	Solenoid Coil, 120V
25	391N-A-2	1/2" Liquid Tite Connector
26	18-3SJ	Cord, 18-3(SJ) (33" Long)
27	W-4	Nipple, QD, 1/4"
28	150523-4	Nipple, Pipe, 1/4" (3 1/2" Long)
29	IWS-36A	Elbow, 1/4" Brass, 90 Degree
30	348D-DIA	Diaphragm (Not Shown)
31	348D-KIT	Diaphragm Repair Kit (Not Shown)

WATER TANK HOSE REEL

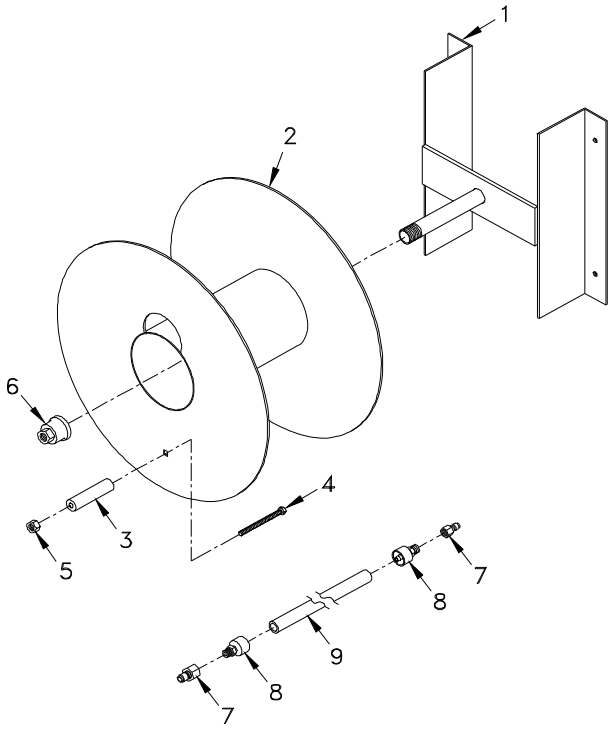

Item#	Part#	Description
1	250700-1-25-6	Mount, Hose Reel, Water Tank
2	250700-35	Hose Reel, Water Tank
3	250700-1-25-3	Handle, Hose Reel
4	FSB189	Carriage Bolt, 5/16 - 18 x 4”
5	FN038	Lock Nut, 5/16 - 18
6	250700-1-25-9	Cap, w/Nut
7	250700-9	Nipple, (Female) QD, 1/4” (2)
8	250700-3-R1	Fitting, Hose End (2)
9	HH-3/8-SP	Terminator Hose, Yellow, 3/8” (200ft. Long) (200ft. started on truck KS128)

PUMP CABINET

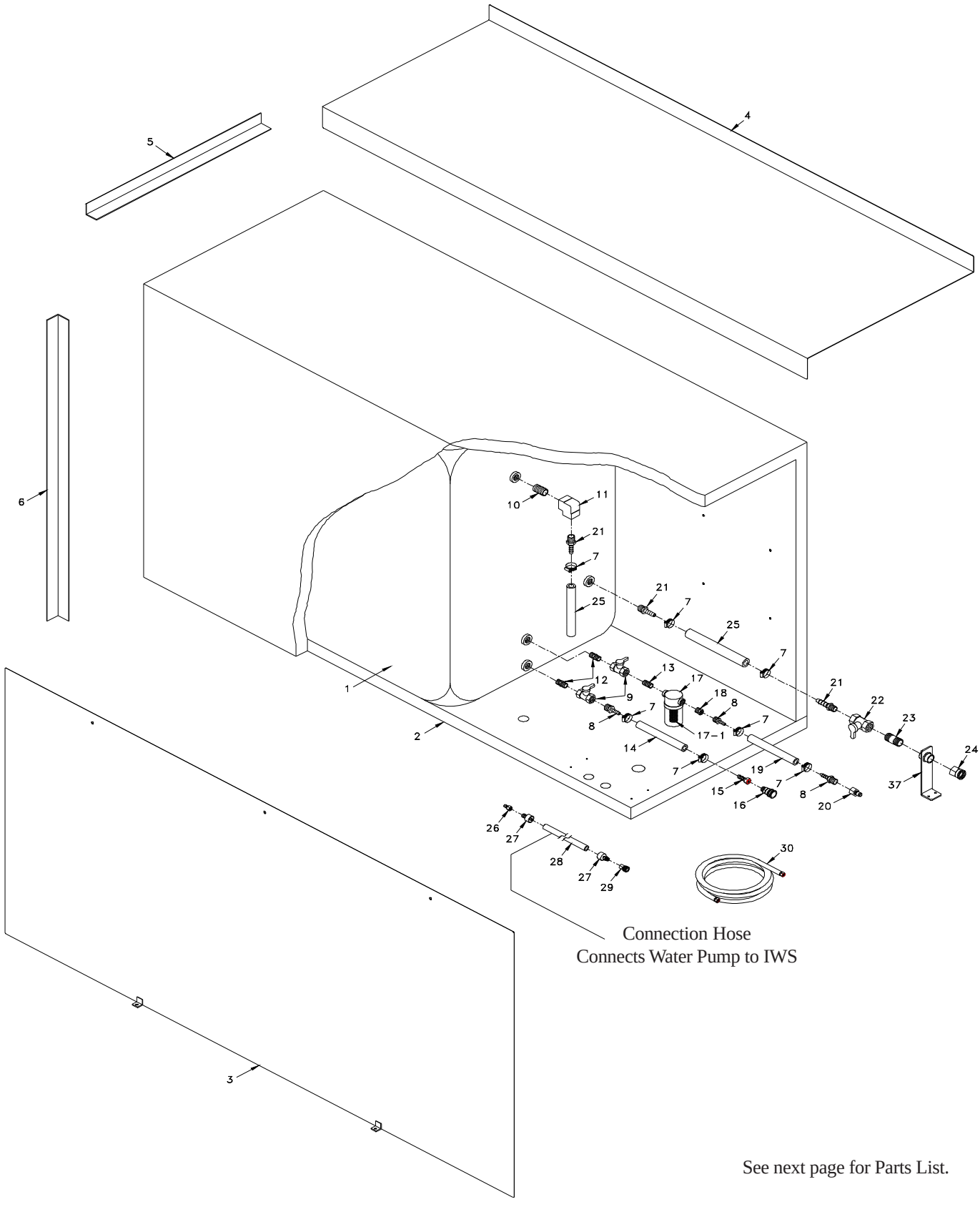

Connection Hose
Connects Water Pump to IWS

See next page for Parts List.

PUMP CABINET

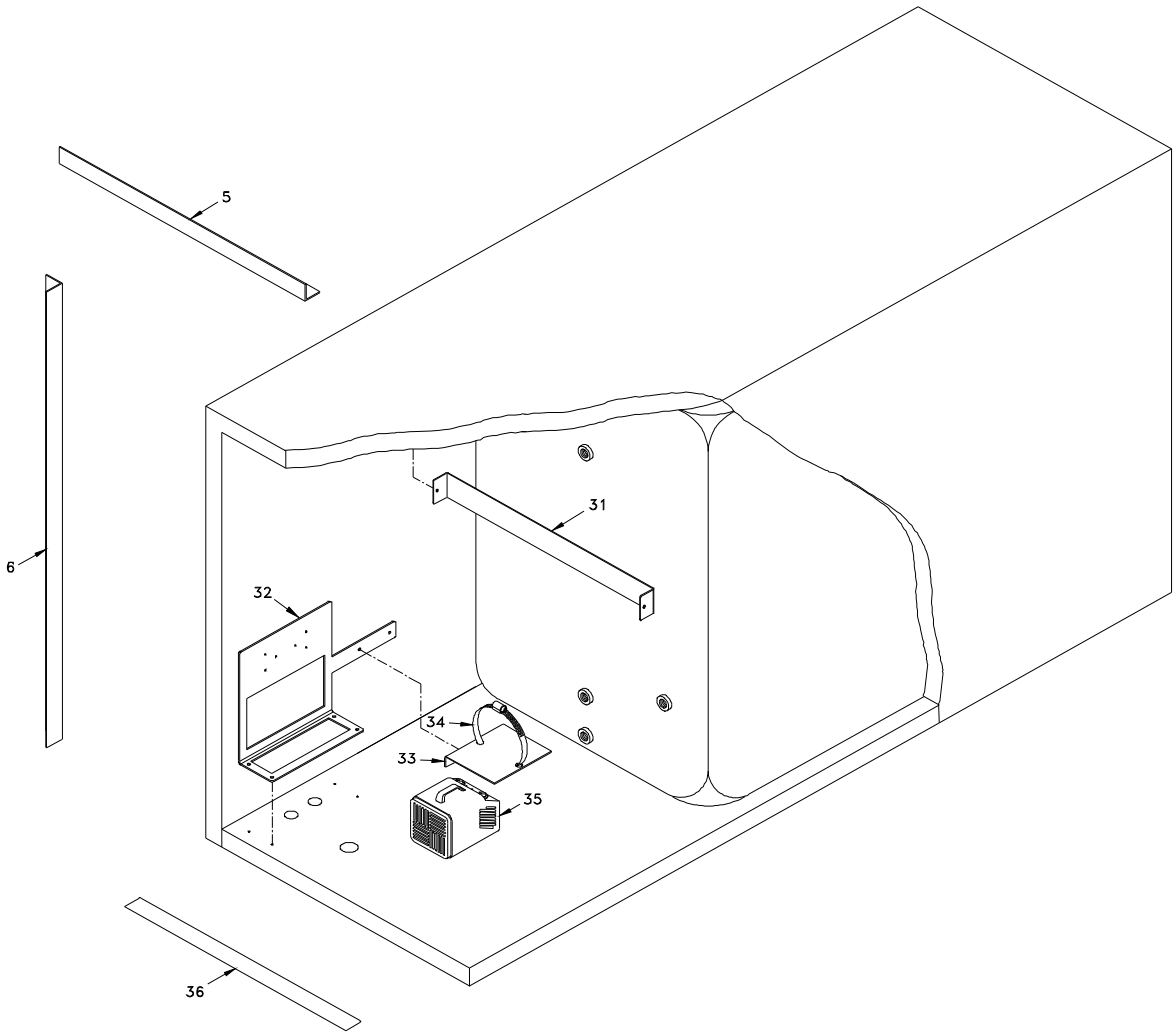

See next page for Parts List.

Pump Cabinet Exploded Parts List

Item#	Part#	Description
1	260900-37	Plastic Water Tank
2	260900-1	Water Tank Enclosure Bottom Frame
3	260900-2	Water Tank Enclosure Front
4	260900-3	Water Tank Enclosure Top
5	260900-5	Water Tank Enclosure Hold Down
6	260900-6	Water Tank Enclosure Bracket (2)
7	250700-1-11	Clamp, Hose, 1/2” (6)
8	250700-1-4	Hose Barb, 1/2” - 1/2” (3)
9	250700-1-3	Valve, Gas, 1/2” (2)
10	G-6	Nipple, Close, 3/4”
11	250700-1-9	Elbow, 3/4", 90 Degree
12	250700-1-7	Nipple, Hex, 1/2” x 1 1/2” (2)
13	250700-1-6	Nipple, Brass 1/2” Close
14	HH-1/2	Heater Hose, 1/2” (10 1/2” Long)
15	G-33	Hose Barb, Female, 1/2” - 1/2”
16	P-1H	Coupler, (Female) QD, 1/2”
17	250700-1-12	Filter Assy, 3/4”
17-1	250700-1-12-1	Filter Screen
18	250530-2	Bushing, Brass Hex, 3/4” - 1/2”
19	HH-1/2	Heater Hose, 1/2” (9 1/2” Long)
20	P-1P	Nipple, Male, FPT, 1/2”
21	G-26	Hose Barb, 3/4” - 3/4” (3)
22	250700-1-2	Valve, Gas, 3/4”
23	250700-1-21	Nipple, 3/4” x 2”
24	250700-16	Coupler, Brass, 3/4” FH-3/4 FP
25	HH-3/4	Heater Hose, 3/4” (36” Long) (2)
26	250700-9	Nipple, (Female) QD, 1/4” (4)
27	250700-3-R1	Fitting, Hose End (2)
28	HH-3/8-SP	Terminator Hose, Yellow, 3/8” (24” Long)
29	250700-1-25-7	Coupler, QD, 1/4” FPT
30	IWS-25E	Water Line, 1/4" x 30' w/Swivel
31	260900-4	Water Tank Enclosure Top Brace (3)
32	260900-7	Electrical Mounting Bracket
33	250700-2-2-R1	Bracket, Heater Fan
34	341	Clamp, Hose, 6”
35	251080-68	Heater & Fan, Pump Cabinet
36	250700-26	Flashing, Bottom
37	260900-15	Valve Hold Down Bracket
38	ST347	Nipple, 1” x 8” Galv. (Not Shown)
39	STR-001	Strap, Logistic (Not Shown)

JOHN DEER GENERATOR ASSEMBLY

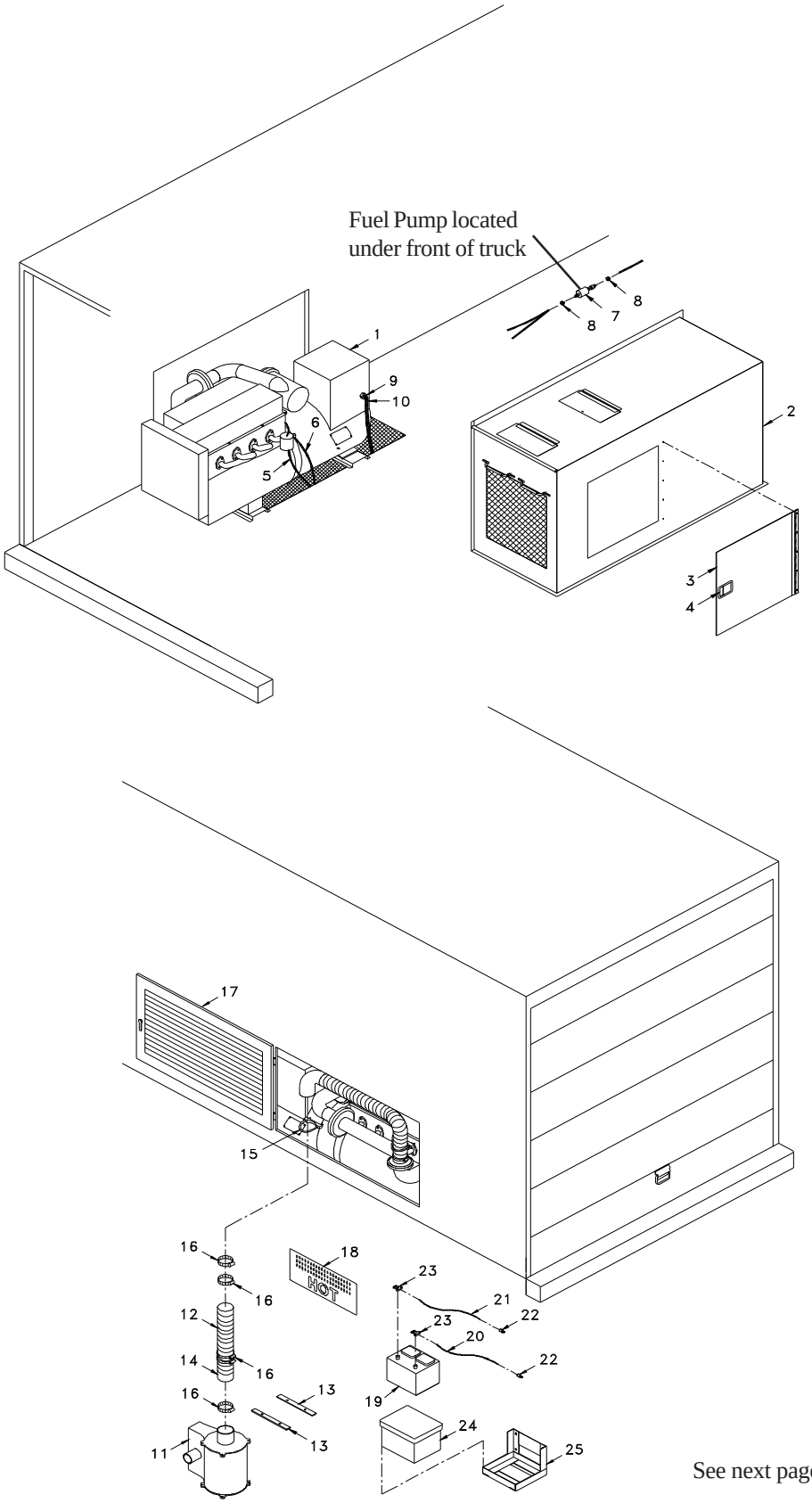

See next page for Parts List.

John Deer Generator Exploded Parts List

Item#	Part#	Description
1	ST301-1-56KW	Generator, 56 KW
2	ST304-R1	Cover, Engine, Generator
3	ST308	Door, Cover, Generator
4	ST308-4	Latch, Door, Generator
5	RM-OTH203-MI	Fuel Line, 5/16" (Supply)
6	RM-OTH213-MI	Fuel Line, 3/8" (Return)
- -	ST301-13	Hose Barb, Brass, 5/16" (Not Shown) (Fuel Line)
- -	ST301-46	Hose Barb, Brass, 3/8" (Not Shown) (Return Line)
7	ST301-16	Fuel Pump
8	ST301-17	Clamp, Hose, 7/32" - 5/8" (2)
9	251080-30	Connector, 1", 90°
10	251080-31	Conduit, Flexible 1"
11	ST301-M-56KW	Muffler
12	RM-OTH022-MI	Heat Wrap, f/Generator, 50 Ft
13	260354-R1	Mount, Muffler (2)
14	RM-OTH212-MI	2 1/2" Flex Pipe, 4 Ft
15	334	Clamp, 2 1/2" Muffler (3)
16	339A	Clamp, Hose, 3" (6)
17	ST301-10	Door, Louver, Generator, 36" x 48"
18	260353-R1	Guard, Muffler
19	ST301-2	Battery, Generator, 700 CCA
20	RM-OTH002-BK	Wire, 2 Ga. Black, 5 Ft
21	RM-OTH002-RD	Wire, 2 Ga. Red, 7 Ft
22	ST301-4	Connector, Wire, Battery (2)
23	ST301-3	Connector, Battery Terminal (2)
24	ST301-15	Box, Battery
25	ST301-7-7-R1	Holder, Battery

POWER TAKE OFF

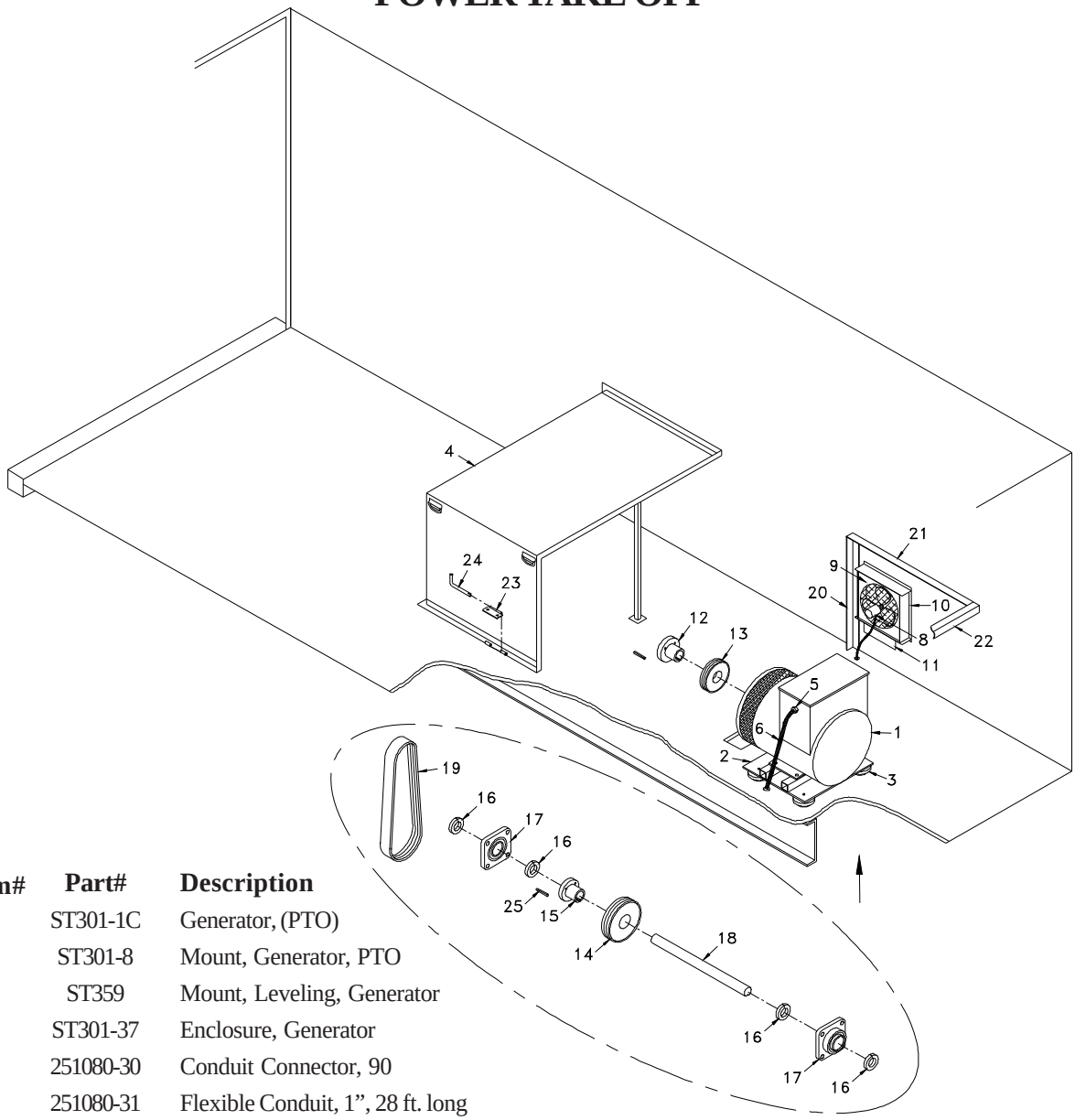

Item#	Part#	Description
1	ST301-1C	Generator, (PTO)
2	ST301-8	Mount, Generator, PTO
3	ST359	Mount, Leveling, Generator
4	ST301-37	Enclosure, Generator
5	251080-30	Conduit Connector, 90
6	251080-31	Flexible Conduit, 1", 28 ft. long
7	543-M-75	Flexible Conduit, 1/2", 29 ft. long
8	543-M-18	Conduit Connector, Straight, 1/2"
9	ST301-38	Fan, Exhaust
10	ST301-39	Bracket, Mounting, Fan
11	ST301-40	Vent Cover
12	ST301-42	Bushing, 2 7/8"
13	KS260-PTO-3	Pulley, 4C85E
14	KS260-PTO-2	Pulley, 4C100E
15	ST301-33	Bushing, 2 1/4"
16	ST301-36	Collar, Single Split, 2 1/4" (4)
17	ST301-34	Bearing, 2 1/4" (2)
18	KS353-10	Shaft, 2 1/4" Dia., 30" long

Item#	Part#	Description
19	KS260-PTO-1	Belt, Banded, 4/CX105
20	KS348	Bracket, PTO Cover, 29 5/8" Long
21	KS347	Bracket, PTO Cover, 34 3/4" Long
22	KS346	Bracket, PTO Cover, 60 3/4" Long
23	580	Bracket, Hinge (3)
24	541	Pin, Hinge (3)
25	KS353-13	3/8" x 1/2" Key
26	KS344	Bracket, Hour Meter (Not Shown)
27	992	Hour Meter (TM4594) (Not Shown)

Note: Item 26 & 27 are optional units for trucks w/o a digital hour meter.

GENSET HOSE REELS

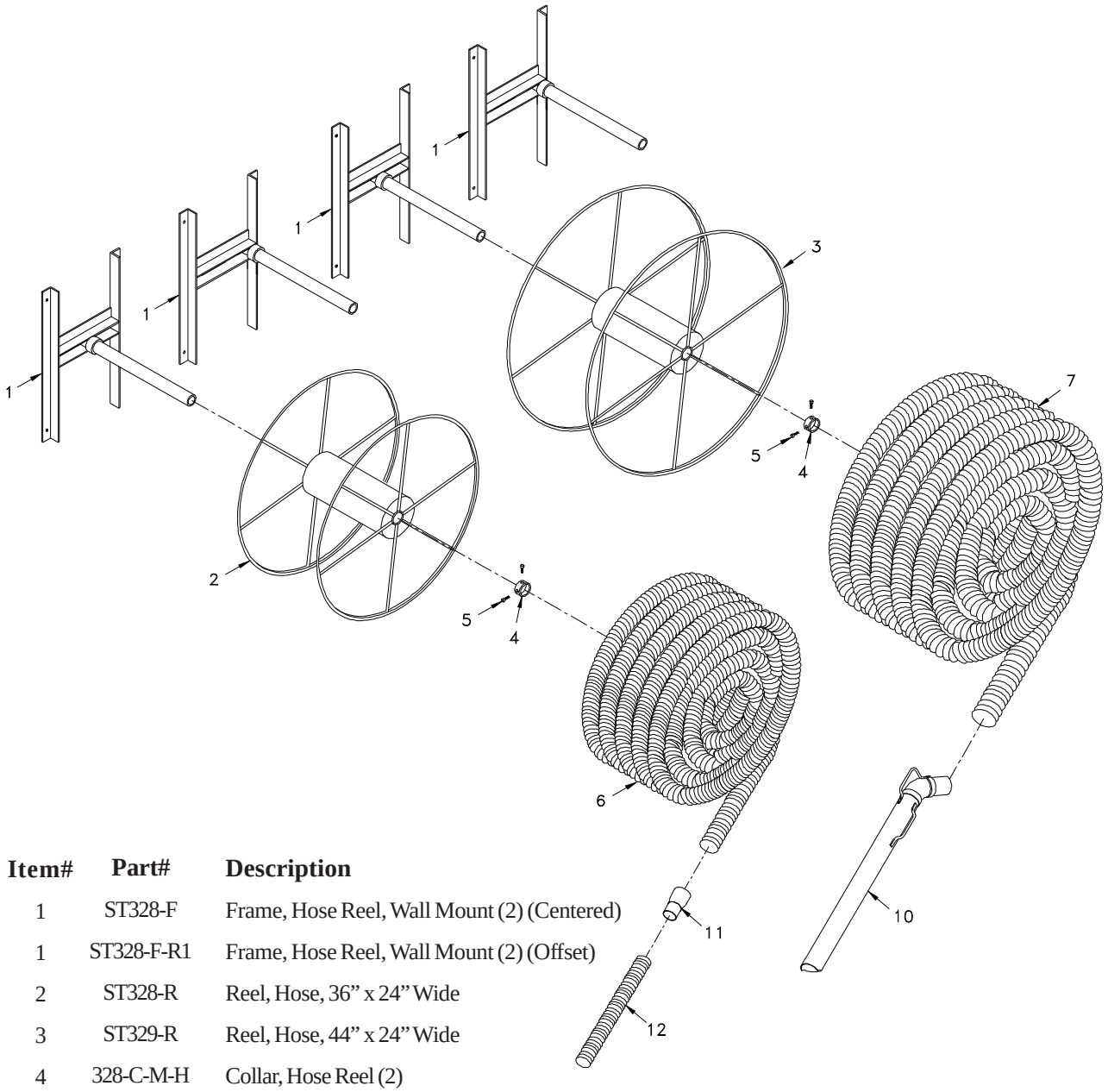

Item#	Part#	Description
1	ST328-F	Frame, Hose Reel, Wall Mount (2) (Centered)
1	ST328-F-R1	Frame, Hose Reel, Wall Mount (2) (Offset)
2	ST328-R	Reel, Hose, 36" x 24" Wide
3	ST329-R	Reel, Hose, 44" x 24" Wide
4	328-C-M-H	Collar, Hose Reel (2)
5	FSB036	5/16 -18 x 5/8" Hex (4)
6	H319	Hose, Flexhaust, 3" x 50' (3)
7	H400	Hose, Smooth Bore, 4" x 50' (3)
8	380	Tube, Connector, 3" x 5" (2) (Not Shown)
9	381	Tube, Connector, 4" x 5" (2) (Not Shown)
10	250600-B	Wand, Vacuum, PVC, 4" x 4'
11	359	Reducer Tube, 3" to 2 1/2"
12	H419	Hose, Vaccuflex, 12 1/2'

POWER TAKE OFF GENERATOR HOSE REEL

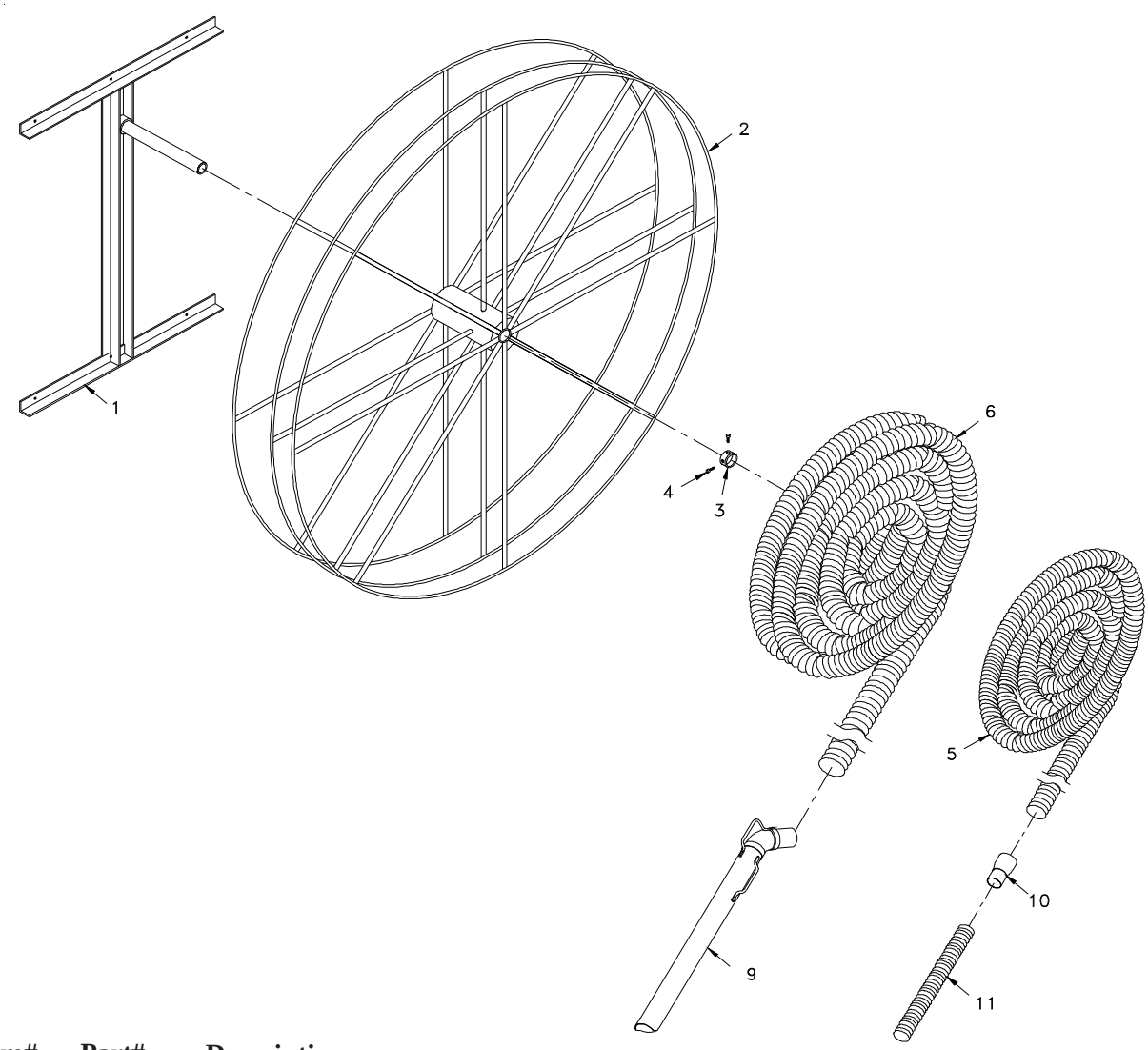

Item#	Part#	Description
1	KS337	Wall Mount, Hose Reel
2	KS333	Reel, Hose, 90” x 12 1/2” Wide
3	328-C-M-H	Collar, Hose Reel
4	FSB036	5/16 -18 x 5/8” Hex (2)
5	H319	Hose, Flexhaust, 3” x 50’ (3)
6	H400	Hose, Smooth Bore, 4” x 50’ (3)
7	380	Tube, Connector, 3" x 5" (2) (Not Shown)
8	381	Tube, Connector, 4" x 5" (2) (Not Shown)
9	250600-B	Wand, Vacuum, PVC, 4” x 4’
10	359	Reducer Tube, 3” to 2 1/2”
11	H419	Hose, Vaccuflex, 12 1/2’

ELECTRICAL ASSEMBLY

Item#	Part#	Description
147-1	260302-KT	Electrical Assy
147-2	251080-1	Electrical Plate, Mounting Panel
147-3	508-2	Kill Switch Button (2)
147-4	8075-1	Kill Switch Contactor (2)
147-5	151080-4	Disconnect Switch 80 Amp (1)
147-6	251080-2	12 Terminal Grounding Bar
147-7	151080-6	Alarm 24 Volt
147-8	KMCS-120	Electrical Maintenance Decal
147-9	KMCS-102	Operating Controls Decal
147-10	251080-35	Amber Pilot Light 1/2" Neon
147-11	251080-36	Green Pilot Light 1/2" Neon
147-12	543-M-59	Push Button (Green)
147-13	543-M-22	4 Pos. Selector Switch (2)
147-14	251080-3	3 Pos. Selector Switch
147-15	543-M-52	2 Pos. Selector Switch
147-16	543-M-16	Contactor, KA-3 (9) (Not Shown)
147-17	543-M-54	Contactor, KA-2 (Not Shown)
147-18	543-M-15	Contactor, KA-1 (3) (Not Shown)
147-19	260302-4	GFCI Outlet Cover
147-20	250700-17	GFCI Outlet (4)
147-21	250700-2-6	Receptacle, Single, NEMA #5-15R
147-22	250700-2-7	Cover Plate, Receptacle
147-23	491	Connector, 4 Pin Female
147-24	KMCS-024	Remote Control Outlet Decal
147-25	151080-67	1/2" 45° Conduit Connector (3)
147-26	250700-4	Outlet Box (2)
147-27	250700-6	Weatherproof Cover 2 GFCI
147-28	250700-12	Weatherproof Cover Switch GFCI
147-30	251080-51	Cover, Plexiglass, Panel Box (See Page 29)
147-31	251080-11	Circuit Breaker Standoff
147-32	RM-DINRAIL-A	1 3/8" Din Rail
147-33	151080-49	1 3/8" Din Rail Clamp (6)
147-34	251080-12	3-Pole 60 Amp Supplementary Protector
147-35	251080-65	2-Pole 20 Amp Supplementary Protector
147-36	251080-14	1-Pole 15 Amp Supplementary Protector
147-37	251080-15	1-Pole 20 Amp Supplementary Protector
147-38	BRKR-2	1-Pole 2 Amp Supplementary Protector
147-39	BRKR-2	1-Pole 2 Amp Supplementary Protector
147-40	251080-56	1-Pole 63 Amp Supplementary Protector
147-41	251080-19	2-Pole Power Distribution Block
147-42	251080-20	3-Pole Power Distribution Block

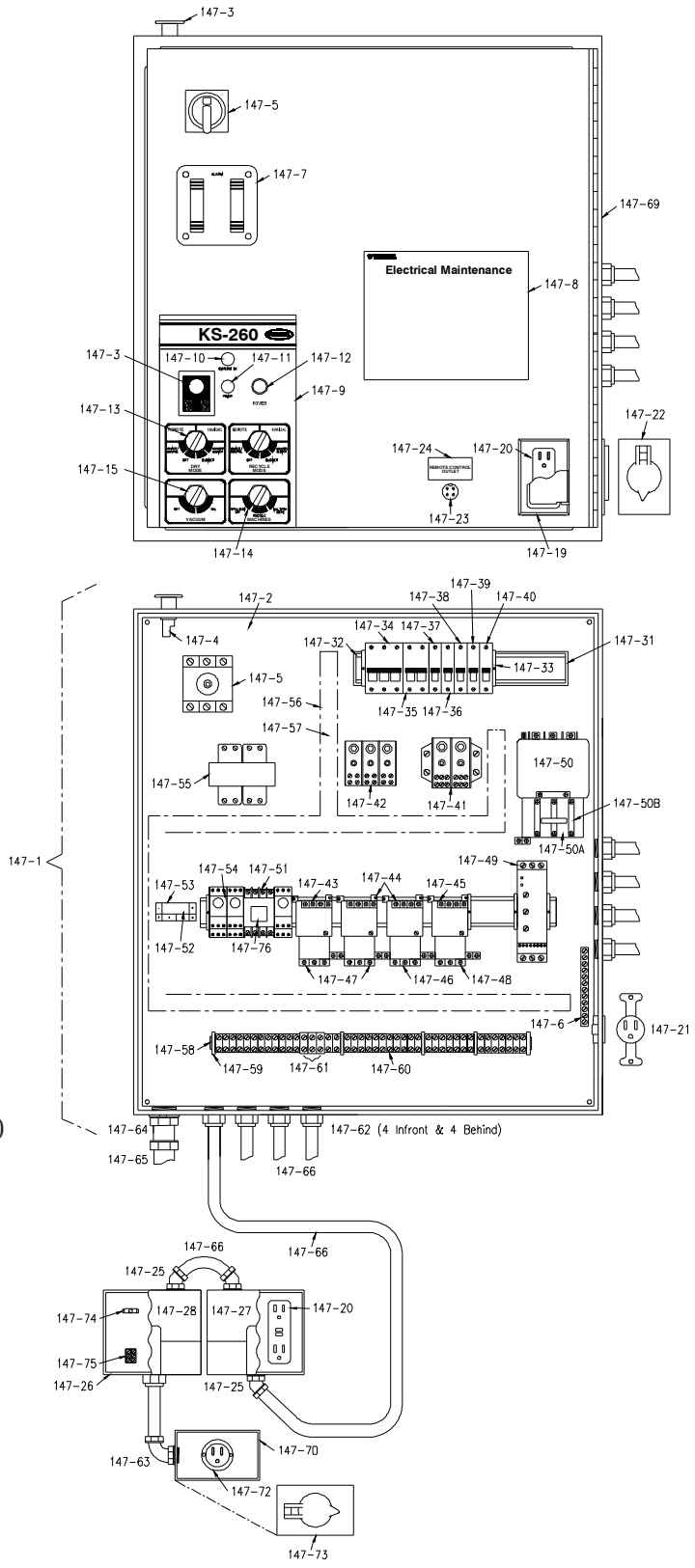

Electrical Box Exploded Parts View

Item#	Part#	Description
147-43	251080-21-R1	120 Volt 5 Hp Starter
147-44	251080-22-R1	24 Volt 5 Hp Starter (2)
147-45	251080-53-R1	24 Volt 10 Hp Starter
147-46	251080-24-R1	4-6 Amp Thermal Overload
147-47	251080-25-R1	2.5-4 Amp Thermal Overload (2)
147-48	8021-15-R1	9-13 Amp Thermal Overload
147-49	260302-2	Soft Start (32Amp)
147-50	251080-26	NEMA Size 2 Starter
147-50A	251080-49	Thermal Overload Relay
147-50B	251080-50	Thermal Units (3)
147-51	543-M-41	8 Pin Sockets
147-52	ELU10-14	Adapter for E-Mech Relay
147-53	ELU10-15	Relay, 50%, 120V
147-54	ELU06-6	Timer, 24V (3)
147-55	1530-D	Transformer, 4 Amp
147-56	RM-CHL001-MI	Wire Channel 1" x 2"
147-57	RM-COV001-MI	Wire Channel Cap 1"
147-58	RM-DINRAIL-B	3/4" Din Rail
147-59	151080-63	3/4" Din Rail End Clamp (White) (5)
147-60	151080-61	Small Terminal Block 30 Amp (39)
147-61	151080-62	Large Terminal Block 60 Amp (3)
147-62	543-M-18	1/2" Straight Conduit Connector (14)
147-63	543-M-25	1/2" 90° Conduit Connector
147-64	251080-29	1" Straight Conduit Connector
147-65	251080-31	1" Flex Conduit
147-66	543-M-75	1/2" Flex Conduit
147-67	KMCS-012	Kill Switch Decal (not shown)
147-68	KMCS-108	"Caution Door Must Be Closed" (Not Shown)
147-69	260302-1-R1	Panel Box
147-70	251080-48	Outlet Box
147-71	251080-47	Duplex Outlet Cover
147-72	42528	Receptacle NEMA #5-15P
147-73	251080-46	Outlet Cover
147-74	433-F	12 Amp Reset
147-75	109066-9	Switch, Toggle, (DPDT)
147-76	543-M-51	Relay, Cube 120V

ELECTRICAL ASSEMBLY

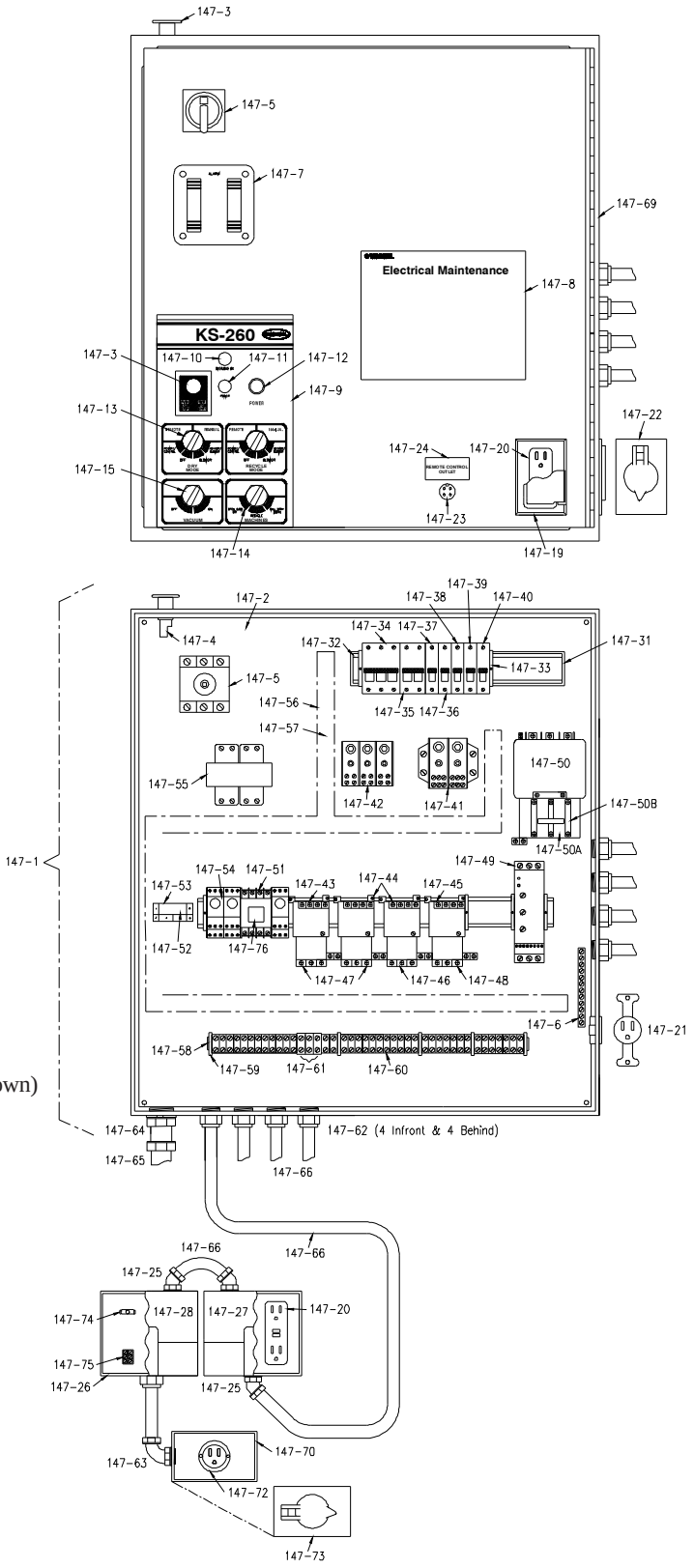



60 YEARS
OF AMERICAN INGENUITY

Made in the U.S.A.

KRENDL MACHINE COMPANY • 1201 SPENCERVILLE RD
DELPHOS, OHIO 45833 • TELEPHONE 800-459-2069 • FAX 419-695-9301
E - MAIL: krendl@krendlmachine.com • WEB SITE: www.krendlmachine.com