HIKROBOT

Camera Link Area Scan Camera

User Manual

Legal Information

User Manual

© 2020 Hangzhou Hikrobot Technology Co., Ltd. All rights reserved.

About This Manual

The Manual includes instructions for using and managing the Product. Pictures, charts, images and all other information hereinafter are for description and explanation only. The information contained in the Manual is subject to change, without notice, due to firmware updates or other reasons. Please find the latest version of this Manual at the Hikrobot website (***https://en.hikrobotics.com/***).

Please use this Manual with the guidance and assistance of professionals trained in supporting the Product.

Trademarks

HIKROBOT and other Hikrobot's trademarks and logos are the properties of Hikrobot in various jurisdictions. Other trademarks and logos mentioned are the properties of their respective owners.

Disclaimer

TO THE MAXIMUM EXTENT PERMITTED BY APPLICABLE LAW, THIS MANUAL AND THE PRODUCT DESCRIBED, WITH ITS HARDWARE, SOFTWARE AND FIRMWARE, ARE PROVIDED “AS IS” AND “WITH ALL FAULTS AND ERRORS”. HIKROBOT MAKES NO WARRANTIES, EXPRESS OR IMPLIED, INCLUDING WITHOUT LIMITATION, MERCHANTABILITY, SATISFACTORY QUALITY, OR FITNESS FOR A PARTICULAR PURPOSE. THE USE OF THE PRODUCT BY YOU IS AT YOUR OWN RISK. IN NO EVENT WILL HIKROBOT BE LIABLE TO YOU FOR ANY SPECIAL, CONSEQUENTIAL, INCIDENTAL, OR INDIRECT DAMAGES, INCLUDING, AMONG OTHERS, DAMAGES FOR LOSS OF BUSINESS PROFITS, BUSINESS INTERRUPTION, OR LOSS OF DATA, CORRUPTION OF SYSTEMS, OR LOSS OF DOCUMENTATION, WHETHER BASED ON BREACH OF CONTRACT, TORT (INCLUDING NEGLIGENCE), PRODUCT LIABILITY, OR OTHERWISE, IN CONNECTION WITH THE USE OF THE PRODUCT, EVEN IF HIKROBOT HAS BEEN ADVISED OF THE POSSIBILITY OF SUCH DAMAGES OR LOSS.

YOU ACKNOWLEDGE THAT THE NATURE OF INTERNET PROVIDES FOR INHERENT SECURITY RISKS, AND HIKROBOT SHALL NOT TAKE ANY RESPONSIBILITIES FOR ABNORMAL OPERATION, PRIVACY LEAKAGE OR OTHER DAMAGES RESULTING FROM CYBER-ATTACK, HACKER ATTACK, VIRUS INSPECTION, OR OTHER INTERNET SECURITY RISKS; HOWEVER, HIKROBOT WILL PROVIDE TIMELY TECHNICAL SUPPORT IF REQUIRED.

YOU AGREE TO USE THIS PRODUCT IN COMPLIANCE WITH ALL APPLICABLE LAWS, AND YOU ARE SOLELY RESPONSIBLE FOR ENSURING THAT YOUR USE CONFORMS TO THE APPLICABLE LAW. ESPECIALLY, YOU ARE RESPONSIBLE, FOR USING THIS PRODUCT IN A MANNER THAT DOES NOT INFRINGE ON THE RIGHTS OF THIRD PARTIES, INCLUDING WITHOUT LIMITATION, RIGHTS OF PUBLICITY, INTELLECTUAL PROPERTY RIGHTS, OR DATA PROTECTION AND OTHER PRIVACY RIGHTS.

YOU SHALL NOT USE THIS PRODUCT FOR ANY PROHIBITED END-USES, INCLUDING THE DEVELOPMENT OR PRODUCTION OF WEAPONS OF MASS DESTRUCTION, THE DEVELOPMENT OR PRODUCTION OF CHEMICAL OR BIOLOGICAL WEAPONS, ANY ACTIVITIES IN THE CONTEXT RELATED TO ANY NUCLEAR EXPLOSIVE OR UNSAFE NUCLEAR FUEL-CYCLE, OR IN SUPPORT OF HUMAN RIGHTS ABUSES.

THE PERFORMANCE DATA IN THIS PUBLICATION IS BASED ON HIKROBOT'S INTERNAL RESEARCH/EVALUATION. ACTUAL DATA MAY VARY DEPENDING ON SPECIFIC CONFIGURATIONS AND OPERATING CONDITIONS AND HIKROBOT SHALL NOT BEAR THE CONSEQUENCES ARISING THEREFROM. IN THE EVENT OF ANY CONFLICTS BETWEEN THIS MANUAL AND THE APPLICABLE LAW, THE LATER PREVAILS.

Regulatory Information

FCC Information

Please take attention that changes or modification not expressly approved by the party responsible for compliance could void the user's authority to operate the equipment.

FCC compliance: This equipment has been tested and found to comply with the limits for a Class A digital device, pursuant to part 15 of the FCC Rules. These limits are designed to provide reasonable protection against harmful interference in a residential installation. This equipment generates, uses and can radiate radio frequency energy and, if not installed and used in accordance with the instructions, may cause harmful interference to radio communications. However, there is no guarantee that interference will not occur in a particular installation. If this equipment does cause harmful interference to radio or television reception, which can be determined by turning the equipment off and on, the user is encouraged to try to correct the interference by one or more of the following measures:

—Reorient or relocate the receiving antenna.

—Increase the separation between the equipment and receiver.

—Connect the equipment into an outlet on a circuit different from that to which the receiver is connected.

—Consult the dealer or an experienced radio/TV technician for help.

FCC Conditions

This device complies with part 15 of the FCC Rules. Operation is subject to the following two conditions:

1. This device may not cause harmful interference.

2. This device must accept any interference received, including interference that may cause undesired operation.

EU Conformity Statement

CE This product and - if applicable - the supplied accessories too are marked with "CE" and comply therefore with the applicable harmonized European standards listed under the EMC Directive 2014/30/EU, LVD Directive 2014/35/EU, the RoHS Directive 2015/863/EU amending 2011/65/EU.

2012/19/EU (WEEE directive): Products marked with this symbol cannot be disposed of as unsorted municipal waste in the European Union. For proper recycling, return this product to your local supplier upon the purchase of equivalent new equipment, or dispose of it at designated collection points. For more information see: www.recyclethis.info

2006/66/EC (battery directive): This product contains a battery that cannot be disposed of as unsorted municipal waste in the European Union. See the product documentation for specific battery information. The battery is marked with this symbol, which may include lettering to indicate cadmium (Cd), lead (Pb), or mercury (Hg). For proper recycling, return the battery to your supplier or to a designated collection point. For more information see: www.recyclethis.info

Symbol Convention

The symbols that may be found in this document are defined as follows.

Symbol	Description
NOTE	Provides additional information to emphasize or supplement important points of the main text.
WARNING	Indicates a potentially hazardous situation, which if not avoided, could result in equipment damage, data loss, performance degradation, or unexpected results.
DANGER	Indicates a hazard with a high level of risk, which if not avoided, will result in death or serious injury.

Available Model

This manual is applicable to the Camera Link Area Scan Camera.

Safety Instructions

These instructions are intended to ensure that the user can use the device correctly to avoid danger or property loss.

Laws and Regulations

The device should be used in compliance with local laws, electrical safety regulations, and fire prevention regulations.

Power Supply

- When wiring or dismounting, make sure that the device power is cut off, and do not operate under electrification.
- Avoid contact with exposed circuit. When the device is powered on, avoid contact with exposed junctions and parts.
- Use the power adapter provided by the regular manufacturer.
- Do not connect multiple devices to one power adapter, to avoid over-heating or fire hazards caused by overload.
- Make sure the plug is properly connected to the power socket.

Transportation

- The device contains precision optical components and electronic components. During transportation, storage and installation, incorrect operations like heavy pressure and violent vibration should be avoided. Otherwise, the device may be damaged.
- Avoid sudden collision, and pack the device with the accompanied carton and cushioning material or similar package.

Using Environment

- In order to reduce the risk of fire or electric shock, do not let the device get wet or damp.
- Do not drop objects onto the device and avoid vigorous vibration.
- Keep the device away from magnetic interference.
- Do not use the device in extremely heat, extremely cold, dusty environment, corrosive environment or high humidity environment.
- Do not aim the device lens at objects of strong light, such as the sun and incandescent lamp. Otherwise, the lens may be damaged.
- The device should be stored in dry environment without corrosive gas. Avoid placing the device in direct sunlight and poorly ventilated locations, or near heat sources such as heater or heating (ignoring this warning may lead to fire hazards).
- Do not operate in explosive environment.
- Keep the surrounding area well ventilated to avoid heat accumulation. Do not contact the radiator directly to avoid scald.

Electrostatic Protection

- Remove all conductive objects (such as jewelry, watch, etc.) on the device body before touching the device, and touch the grounding metal bracket by hand to release the static electricity.
- It is suggested to wear anti-static suit to prevent damage to the equipment caused by static electricity.

- When installing or maintaining the device, wear anti-static wristband or anti-static gloves. Make sure that the wristband is tightly attached to the skin and is reliably grounded.
- It is forbidden to touch exposed circuit boards with bare hands. Static electricity generated by human body may damage electrostatic sensitive components on circuit boards.
- When touching electrostatic sensitive components or devices, proper grounding measures must be taken.
- Put electrostatic sensitive components into anti-static bags for protection.
- It is suggested to place humidifier in dry environment to maintain suitable humidity and reduce static electricity generation.

Maintenance

- If the device is not working properly, contact the store or the nearest service center. Do not disassemble or modify the device in any way. (The company does not bear any liability for any problem arising from unauthorized modification or maintenance).
- Properly preserve all the original packaging materials of the device so that when problems arise, the device can be packed with packaging materials and sent to the agent or returned to the manufacturer for processing. The company does not bear any liability for accidental damage during transportation caused by non-original packaging.
- This device is a precision electronic device, no components can be maintained by user, do not disassemble the device arbitrarily.

Cleaning

Do not touch the image sensor directly. If the sensor needs to be cleaned, use a clean rag and wet it with alcohol, then gently wipe off the dirt; if the device is not in use, cover the image sensor with dust cover for protection.

Installation

Do not install the device on vibrating surface or places that are vulnerable to impact.

Personnel Requirement

Quality requirements for installation and maintenance personnel: qualification certificate or working experience in weak current system installation and maintenance, and relevant working experience and qualifications. Besides, the personnel must possess the following knowledge and operation skills:

- The basic knowledge and operation skills of low voltage wiring and low voltage electronic circuit connection.
- The ability to comprehend the contents of this manual.

Contact Information

Hangzhou Hikrobot Technology Co., Ltd.

No. 399 Danfeng Road, Binjiang District, Hangzhou, 310051, China

E-mail: tech_support@hikrobotics.com

Website: en.hikrobotics.com

Table of Contents

Chapter 1 Overview 1
1.1 Introduction 1
1.2 Key Feature 1
Chapter 2 Appearance 2
Chapter 3 Interface and Indicator 5
3.1 Interface Description 5
3.2 Indicator Description 9
Chapter 4 Installation 10
4.1 Installation Preparation 10
4.2 Install Camera and Connect Frame Grabber 10
Chapter 5 Camera Connection 12
5.1 Frame Grabber Software Settings 12
5.1.1 Install Frame Grabber Software 12
5.1.2 Set Frame Grabber Software 12
5.2 Camera Connection 13
5.2.1 Install MVS Client Software 13
5.2.2 Connect Camera to Client Software 14
Chapter 6 Client Software Settings 15
6.1 Client Software Layout 15
6.2 Set Device Tap Geometry 16
6.3 Serial Port Tool 17
Chapter 7 Camera Features 19
7.1 Global Shutter 19
7.2 Rolling Shutter 19
7.3 Sensor Shutter Mode 20
7.4 Non-Overlap Exposure and Overlap Exposure 20
7.4.1 Non-Overlap Exposure 21
7.4.2 Overlap Exposure 21
Chapter 8 Image Acquisition 23
8.1 Set Frame Rate 23
8.2 Set Trigger Mode 24
8.3 External Trigger Mode 24

8.3.1 Set External Trigger Source 24
8.3.2 Set Software Trigger 26
8.3.3 Set Hardware Trigger 26
8.3.4 Set Counter Trigger 27
8.3.5 Set Frame Grabber Trigger 29
8.4 Trigger Related Parameters 29
8.4.1 Set Burst Frame Count 30
8.4.2 Set Trigger Delay 30
8.4.3 Set Trigger Cache Enable 31
8.4.4 Set Trigger Activation 32
8.4.5 Set Trigger Debouncer 33
Chapter 9 I/O Output 35
9.1 Select Output Signal 35
9.2 Set Output Signal 35
9.2.1 Enable Level Inverter 35
9.2.2 Enable Strobe Signal 36
Chapter 10 I/O Electrical Feature and Wiring 40
10.1 I/O Electrical Feature 40
10.1.1 Line 0 Opto-isolated Input Circuit 40
10.1.2 Line 1 Opto-isolated Output Circuit 41
10.1.3 Line 2 Bi-direction I/O Circuit 42
10.2 I/O Wiring 45
10.2.1 Line 0 Wiring 45
10.2.2 Line 1 Wiring 46
10.2.3 Line 2 Wiring 47
Chapter 11 Image Parameter 50
11.1 View Resolution 50
11.2 Set ROI 50
11.3 Set Image Reverse 51
11.4 Set ADC Bit Depth 52
11.5 Set Pixel Format 52
11.6 Set Test Pattern 53
11.7 Set Binning 56
11.8 Set Decimation 57
11.9 Set Exposure Auto 57

11.10 Set HDR 58
11.11 Set Gain 59
11.11.1 Set Analog Gain 59
11.11.2 Set Digital Gain 60
11.12 Set Brightness 60
11.13 Set Black Level 61
11.14 Set White Balance 62
11.15 Set Gamma Correction 63
11.16 Set Sharpness 64
11.17 Set Channel Correct Mode 65
11.18 Set AOI 65
11.19 Set Hue and Saturation 66
11.20 Set LUT 67
11.21 Set Shading Correction 67
Chapter 12 Other Functions 70
12.1 Device Control 70
12.2 Transport Layer Control 71
12.3 Set Fan 73
12.4 Save and Load User Set 74
12.5 Update Firmware 75
Chapter 13 Trouble Shooting 78
Chapter 14 Revision History 79
Appendix A Camera Parameter Index 80
Appendix B Command List 85

Chapter 1 Overview

1.1 Introduction

The Camera Link area scan camera uses the Camera Link interface to transmit non-compressed images in real time, and it can acquire images and set parameters via the client software, the frame grabber software, SDK, etc. The camera is applicable to the electronics and semiconductor inspection, research and scientific imaging, microscopy and metrology, etc.

1.2 Key Feature

- Supports auto or manual adjustment for gain, exposure time, white balance, Look-Up Table (LUT), Gamma correction, etc.
- Supports the hardware trigger, software trigger, free run, etc.
- Supports configuration modes of Base, Medium, Full and 80-bit via the Camera Link interface.
- Compatible with Camera Link Protocol, GenlCam Standard, and the third-party software based on the protocol and standard.

NOTE

- The camera functions may differ by camera models.
- For specific camera functions, refer to the camera’s user manual.

Chapter 2 Appearance

NOTE

Appearances here are for reference only. Refer to the camera's specification for detailed dimension and other information.

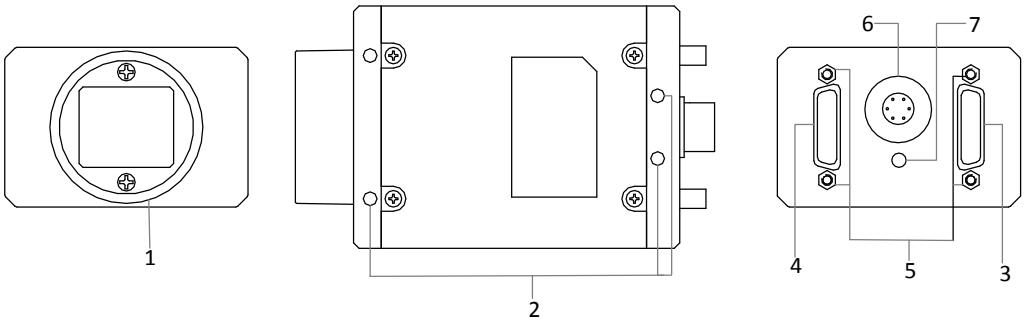

Figure 2-1 Appearance (Type I)

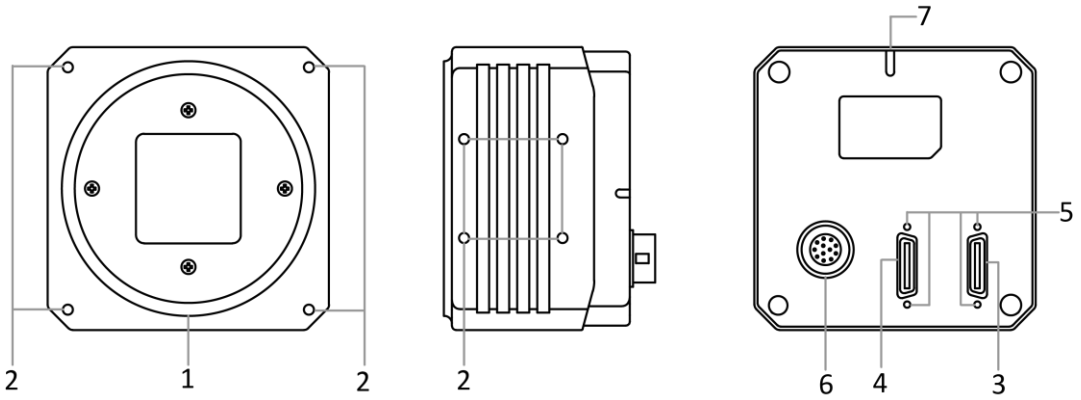

Figure 2-2 Appearance (Type II)

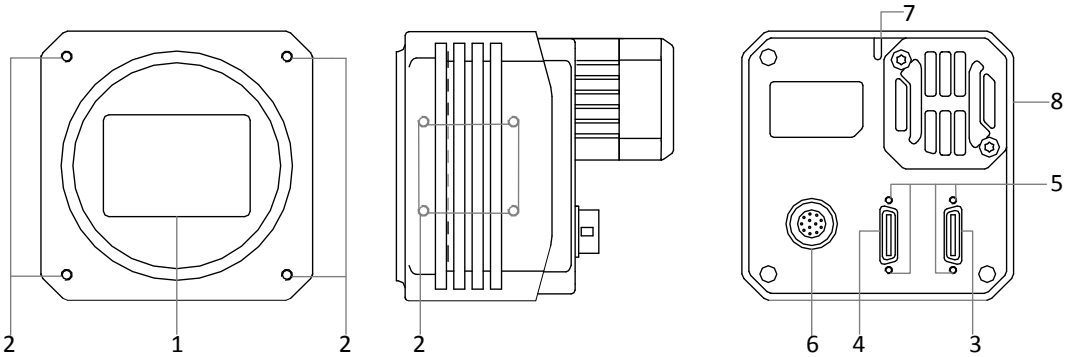

Figure 2-3 Appearance (Type III)

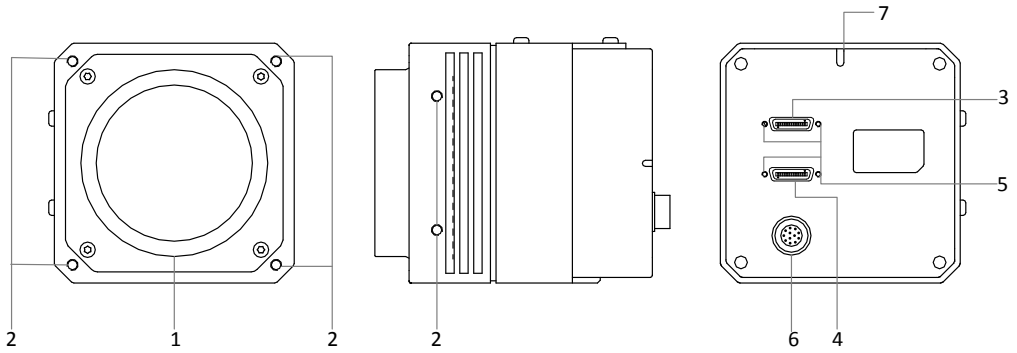

Figure 2-4 Appearance (Type IV)

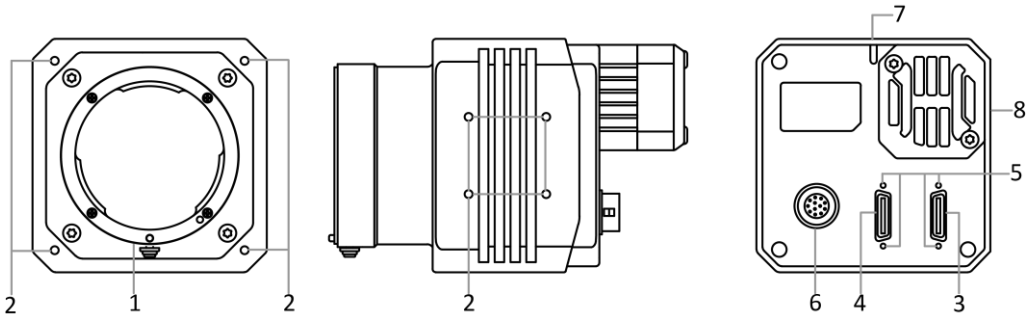

Figure 2-5 Appearance (Type V)

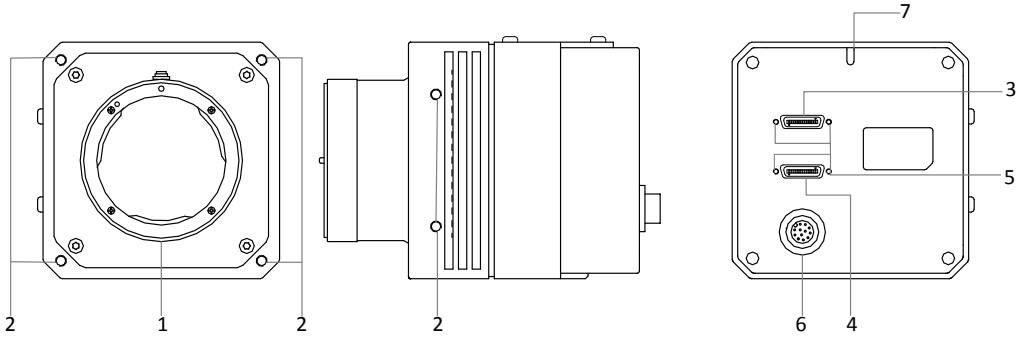

Figure 2-6 Appearance (Type VI)

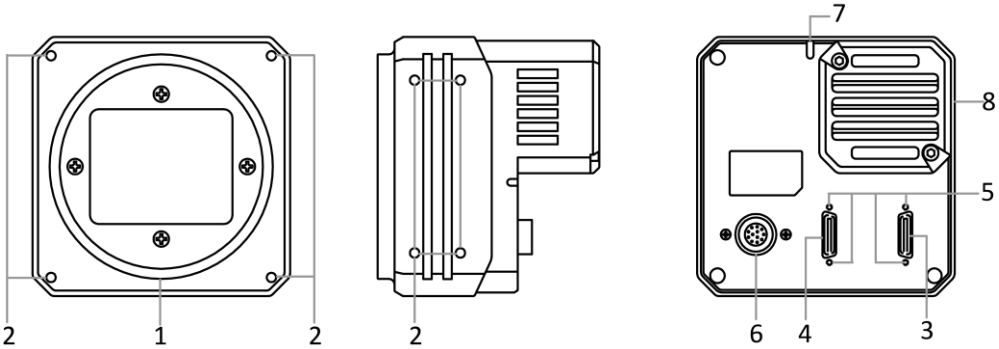

Figure 2-7 Appearance (Type VII)

Table 2-1 Description

No.	Name	Description
1	Lens Mount	It is used to install the lens.
2	Screw Hole	It is used to fix the camera to the installation position.
3	CL1 Interface	It refers to the Camera Link1 with SDR interface.
4	CL2 Interface	It refers to the Camera Link2 with SDR interface.
5	Screw Hole	It is used to fix Camera Link cables.
6	Power and I/O Interface	It refers to the power and I/O interface that provides power, input/output signal, serial port, etc.
7	LED Indicator	It indicates the camera's status.
8	Fan	It is used to cool the camera.

Chapter 3 Interface and Indicator

3.1 Interface Description

NOTE

The power and I/O interface as well as pin definitions are different by camera models.

For type I camera, it has a 6-pin power and I/O interface. Read the followings to get its pin definitions.

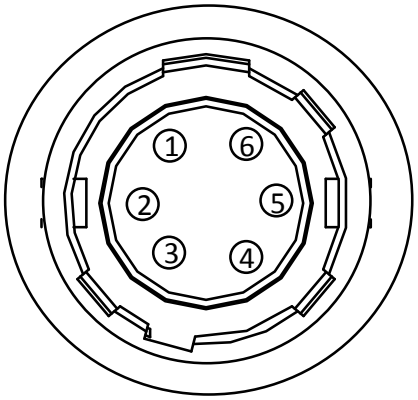

Figure 3-1 6-Pin Interface

Refer to the pin definitions and labels attached to the power and I/O cable to wire the device.

Table 3-1 Pin Definitions (Type I Camera)

No.	Signal	I/O Signal Source	Description
1	DC_PWR	--	Camera power supply
2	OPTO_IN	Line 0+	Opto-isolated input
3	GPIO	Line 2+	Can be configured as input or output
4	OPTO_OUT	Line 1+	Opto-isolated output
5	OPTO_GND	Line 0/1-	Opto-isolated signal ground
6	GND	Line 2-	Camera power supply ground

For type II, type III and type V cameras, they have a 12-pin power and I/O interface. Read the followings to get their pin definitions.

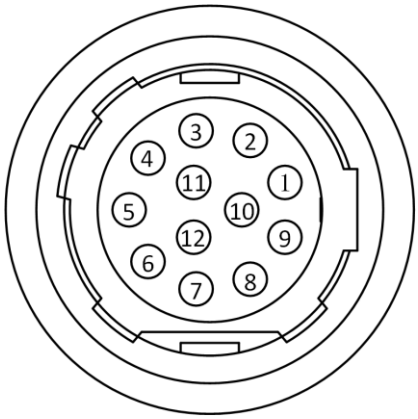

Figure 3-2 12-Pin Interface

Refer to the pin definitions and labels attached to the power and I/O cable to wire the device.

Table 3-2 Pin Definitions (Type II, Type III and Type V Cameras)

No.	Signal	I/O Signal Source	Description
1	GND	Line 2-	Camera power supply ground
2	DC_PWR	--	Camera power supply
3	Reserved		
4	Reserved		
5	GND_IO	Line 0/1-	Opto-isolated signal ground
6	Reserved		
7	Reserved		
8	RS232_RX	--	RS232 receiving data
9	RS232_TX	--	RS232 transmitting data
10	GPIO	Line 2+	Can be configured as input or output
11	OPTO_OUT	Line 1+	Opto-isolated output
12	OPTO_IN	Line 0+	Opto-isolated input

For type IV and type VI cameras, they also have a 12-pin power and I/O interface. Read the followings to get their pin definitions.

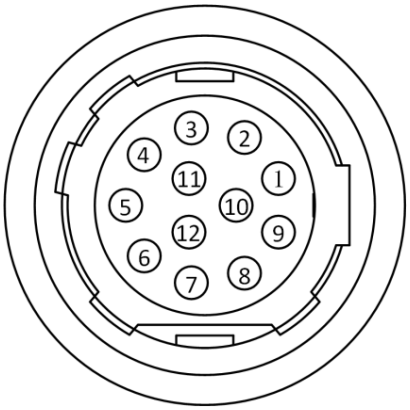

Figure 3-3 12-Pin Interface

Refer to the pin definitions and labels attached to the power and I/O cable to wire the device.

Table 3-3 Pin Definitions (Type IV and Type VI Cameras)

No.	Signal	I/O Signal Source	Description
1	GND	--	Camera power supply ground
2	DC_PWR	--	Camera power supply
3	DC_PWR_TEC	--	TEC power supply
4	DC_PWR_TEC	--	TEC power supply
5	OPT_OUT-	Line 1-	Opto-isolated output signal ground
6	OPT_IN-	Line 0-	Opto-isolated intput signal ground
7	GND_TEC	--	TEC power supply ground
8	RS232_RX	--	RS232 receiving data
9	RS232_TX	--	RS232 transmitting data
10	GND_TEC	--	TEC power supply ground
11	OPT_OUT+	Line 1+	Opto-isolated output
12	OPT_IN+	Line 0+	Opto-isolated input

For type VII camera, it also has a 12-pin power and I/O interface. Read the followings to get its pin definitions.

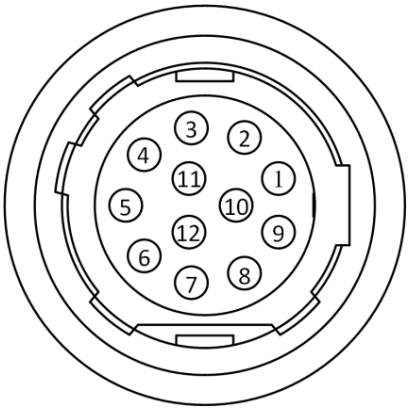

Figure 3-4 12-Pin Interface

Refer to the pin definitions and labels attached to the power and I/O cable to wire the device.

Table 3-4 Pin Definitions (Type VII Camera)

No.	Signal	I/O Signal Source	Description
1	GND	Line 2-	Camera power supply ground
2	DC_PWR	--	Camera power supply
3	DC_PWR	--	Camera power supply
4	OPT_IN-	Line 0-	Opto-isolated input signal ground
5	OPT_OUT-	Line 1-	Opto-isolated output signal ground
6	GND	--	Camera power supply ground
7	GND	--	Camera power supply ground
8	232_RXD	--	RS232 received data
9	232_TXD	--	RS232 transmitted data
10	GPIO2	Line 2+	Can be configured as input or output
11	OPT_OUT+	Line 1+	Opto-isolated output
12	OPT_IN+	Line 0+	Opto-isolated input

3.2 Indicator Description

The camera indicator is used to display different camera status.

Table 3-5 Indicator Description

No.	Indicator Color	Indicator Status	Description
1	Blue	Unlit	The camera is powered off.
3	Blue	Flashing rapidly	The camera is under the internal trigger mode and is in transmission status.
4	Blue	Flashing slowly	The camera is under the external trigger mode and is in transmission status.

NOTE

When the indicator is flashing slowly, its unlit interval is 1 s.

Chapter 4 Installation

4.1 Installation Preparation

You need to prepare following accessories before camera installation.

Table 4-1 Accessories

No.	Name	Quantity	Description
1	Frame Grabber	1	It refers to the Camera Link frame grabber that you need to purchase separately. It is recommend to use Matrox's frame grabber.
2	Power and I/O Cable	1	It refers to the 6-pin or 12-pin power and I/O cable. You need to purchase separately.
3	DC Power Supply	1	You should select suitable power adapter or switch power supply according to the camera power supply and consumption. You need to purchase separately.
4	Cable(s)	1/2	The cable(s) here refers to the Camera Link cable(s), and the camera interface for connecting Camera Link cable is SDR interface. You can use 1 or 2 cable(s) to transmit data. You need to purchase it separately in accordance with the camera interface and the frame grabber model you use.
5	Lens	1	It refers to the lens that matches with lens mount of the camera. You need to purchase separately.
6	Adapter Ring	1	If the lens you used does not match with lens mount of the camera, you need to use an adapter ring. You need to purchase separately.

4.2 Install Camera and Connect Frame Grabber

Before you start

- Make sure the device in the package is in good condition and all the assembly parts are included.
- Make sure all the related devices are powered off during the installation.

Steps:

1. Fix the camera to the installation position.
2. Install the lens to the camera.
3. Connect the camera to a frame grabber via Camera Link cable.
4. Connect the camera to a 6-pin or 12-pin power and I/O cable.
5. Connect the power and I/O cable to a power adapter or switch power supply.

NOTE

- The camera interface for connecting Camera Link cable is SDR interface, and you need to select applicable Camera Link cable according to camera interface and frame grabber model you use, and connect camera's Camera Link interfaces to respective interfaces of the frame grabber.
- The camera has 2 Camera Link interfaces, and it can transmit data via 1 or 2 Camera Link interface(s). If you need to use 1 interface, the corresponding interface number is CL1, and the Base configuration mode is available. If 2 interfaces are required, the corresponding interface number is CL1 and CL2, and the configuration mode of Base, Medium, Full or 80-bit is available.
- The configuration mode is decided by the camera, frame grabber, and used Camera Link interface amount.

Chapter 5 Camera Connection

Camera connection to the client software is required for camera's configuration and remote operations. This section introduces how to install the client software, connect the camera to the client software, etc.

5.1 Frame Grabber Software Settings

5.1.1 Install Frame Grabber Software

The frame grabber software is used to set parameters of the frame grabber, view and set parameters of the camera, acquire image data, etc.

Obtain the frame grabber software installation package and driver package from frame grabber supplier, and install the frame grabber software and frame grabber driver.

NOTE

- If the frame grabber driver is not installed accordingly, the frame grabber cannot be identified properly or acquire image normally.
- Refer to the user manual of frame grabber you purchased for detailed operation.

5.1.2 Set Frame Grabber Software

After the camera is connected to the frame grabber, you are required to set the parameters of the frame grabber via the frame grabber software. Incorrect parameters or not setting parameters may make the camera fail to output images. Here we take Dalsa and Matrox frame grabber as an example.

NOTE

- The parameters may differ by frame grabber models.
- For other frame grabbers you use, refer to the user manual of the frame grabber for details.

Table 5-1 Parameters of Dalsa Frame Grabber

Frame Grabber Parameters	Camera Parameters
Pixel Clock Input Frequency	Pixel Clock
Camera Link configuration	CI Configuration
# of Segment per Line(TAPS)	Tap Number

Frame Grabber Parameters	Camera Parameters
Camera Sensor Geometry Setting	Device Tap Geometry

Table 5-2 Parameters of Matrox Frame Grabber

Frame Grabber Parameters	Camera Parameters
Pixel Clock Frequency	Pixel Clock
Camera Link config	CI Configuration
Taps	Tap Number
Tap Configuration	Device Tap Geometry

5.2 Camera Connection

5.2.1 Install MVS Client Software

MVS client software is used to connect the camera, set its parameters, etc.

NOTE

- The MVS client software is compatible with 32/64-bit Windows XP/7/10, 32/64-bit Linux, and 64-bit MacOS operating systems. Currently, only the MVS client software installed in Windows can be used to connect Camera Link cameras.
- The graphic user interface may differ by different versions of the client software you use.
- You can download Windows version client software from *en.hikrobotics.com*. For other versions, you can mail to tech_support@hikrobotics.com to get client software installation package.

Steps:

1. Double click the MVS installation package.
2. Select the language.
3. Read and check **Terms of the License Agreement**.

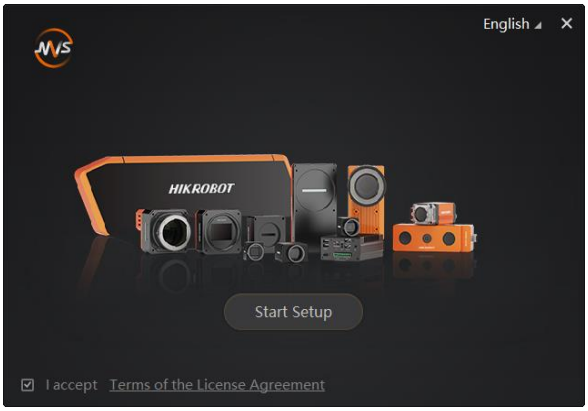

Figure 5-1 Installation Interface

4. Click **Start Setup**.
5. Keep default settings, and click **Next**.
6. Finish the installation according to the interface prompts.

5.2.2 Connect Camera to Client Software

Steps:

1. Double click the MVS client software.
2. Click  to refresh the camera in the device list.

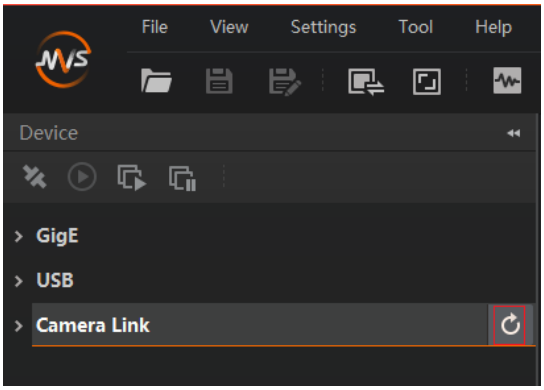

Figure 5-2 Refresh Camera

3. Right click the camera, and set its baud rate according to actual demand.
4. Double click the camera or click  to connect camera to the client software.

NOTE

- The default value of baud rate is 9600, and it is recommend to set as 115200.
- The refresh process may take a few minutes, please wait patiently.

Chapter 6 Client Software Settings

6.1 Client Software Layout

After connecting to the camera, the client software can read the camera attributes and display them.

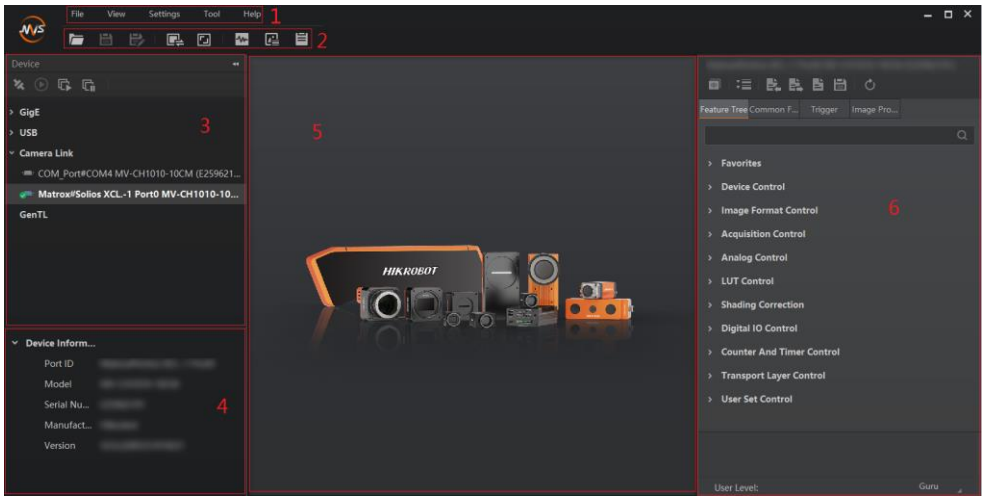

Figure 6-1 Main Window

NOTE

For specific main window of the client software, please refer to the actual one you got.

Table 6-1 Description of the Main Window

No.	Area Name	Description
1	Menu Bar	The menu bar displays function modules, including File, View, Settings, Tool, and Help.
2	Control Toolbar	The control toolbar provides quick operations for the device.
3	Device List Panel	This panel displays device list, and you can connect or disconnect device, modify device IP address, etc.
4	Device Information Panel	This panel displays the detailed device information.
5	Display Window	This area displays the acquisition images in real-time. You can click different icons to capture and save image, record, etc.

No.	Area Name	Description
6	Feature Panel	You can view and set features of the selected camera, and perform operations such as importing, exporting, and saving features.

Click ▸ in the camera's feature panel to unfold the specific camera parameters, and set them according to actual demands.

NOTE

The camera’s attribute tree and parameters may differ by camera models.

Table 6-2 Description

Attribute	Description
Device Control	You can view the device information, edit its name, reset the device, etc.
Image Format Control	You can view and set the device’s resolution, image reverse function, pixel format, region of interest, test pattern, etc.
Acquisition Control	You can view and set the device’s acquisition mode, frame rate, trigger mode, exposure time, etc.
Analog Control	You can view and set the device’s gain, black level, Gamma correction, sharpness, etc.
LUT Control	You can view the Look-Up Table (LUT), and set its index and value.
Shading Correction	You can set shading correction to correct shade.
Digital IO Control	You can set the different input and output signals.
Counter And Timer Control	You can view and set the counter related parameters.
Transport Layer Control	You can view and set the parameters of the device’s transport layer.
User Set Control	You can save or load the device’s parameters.

6.2 Set Device Tap Geometry

The parameter value of the camera sensor geometry in the frame grabber software should be the same with that of **Device Tap Geometry** in the MVS client software.

NOTE

Inconsistent parameter values may lead to an image exception.

Run the client software, and go to **Transport Layer Control** > **Device Tap Geometry** to set **Device Tap Geometry** according to actual demands.

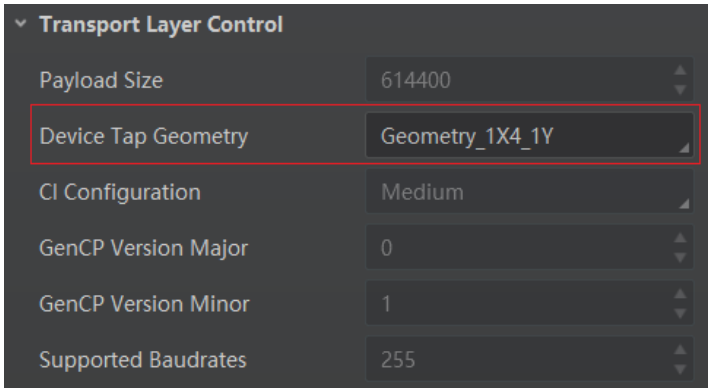

Figure 6-2 Device Tap Geometry

NOTE

The supported **Device Tap Geometry** may differ by camera models.

6.3 Serial Port Tool

Apart from the MVS client software and the frame grabber software, you can read or set camera parameters via the serial port tool that you can search and download from the Internet.

The serial port tool is used to detect camera status, assign serial port to the camera, and set its parameters. When using the serial port tool, you are required to set serial port parameters as follows.

Table 6-3 Serial Port Parameters

Serial Port Parameters	Value
Baud Rate	9600 Bd/s
Data Bit	8-bit
Parity Bit	None
Stop Bit	1-bit
Flow Control	None

NOTE

- The camera parameters can be set via the MVS client software, the frame grabber or serial port tool, but you cannot use them at same time.
- The default value of the camera's baud rate is 9600 Bd/s.

The command for setting camera parameters via port is sent in the format of ASCII code. The camera setting commands are send by user's application. After receiving commands, the camera will return a value (success or fail). The specific command format is shown below.

Table 6-4 Command Description

Command Format: *< Command > < Node Name > < Value> <\r>* Note: Simply put, input the command and press Enter.
If the writing command has been set, the returned value is as follows. *Success! <\r> <\n>* If the reading command has been set, the returned value is as follows. *Success! <\r> <\n> <\r> <\n>* *get < Note Name > : <Value> <\r> <\n>* If setting the writing or reading command fails, the returned value is as follows. *Failed! <\r> <\n> <\r> <\n>* *Wrong input format. <\r> <\n>*

Executing the reading or writing command is as follows.

Table 6-5 Command for Writing or Reading

Command for writing: The following example is to set the exposure as 1000 us (for detailed commands, please refer to refer to Section ***Appendix B***). Command: *w ExposureTime 1000 <\r>* Returned value: *Success! <\r> <\n>* (Setting succeeded.) *Failed! <\r> <\n> <\r> <\n>* *Wrong input format. <\r> <\n>* (Setting failed.)
Command for reading: The following example is to get the exposure as 1000 us (for detailed commands, please refer to refer to Section ***Appendix B***). Command: *r ExposureTime <\r>* Reurned value: *Success! <\r> <\n> <\r> <\n>* *get ExposureTime: 1000 <\r> <\n>* (Reading succeeded.) *Failed! <\r> <\n> <\r> <\n>* *Wrong input format. <\r> <\n>* (Reading failed.)

Chapter 7 Camera Features

7.1 Global Shutter

For camera that supports global shutter, its exposure starts and ends in each line simultaneously. After the exposure, data readout starts line by line. All pixels expose at the same time, then readout at different time, as shown below.

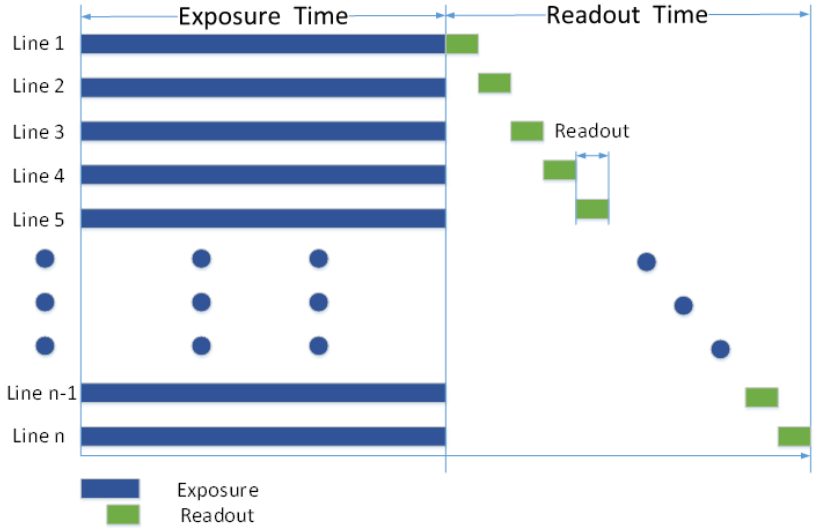

Figure 7-1 Global Shutter

7.2 Rolling Shutter

For cameras that support rolling shutter: as soon as the exposure ends, and the data readout starts simultaneously. After the whole action, the rest of rows start to expose and read out one by one. All pixels expose at the same time, then readout at different time, as shown below.

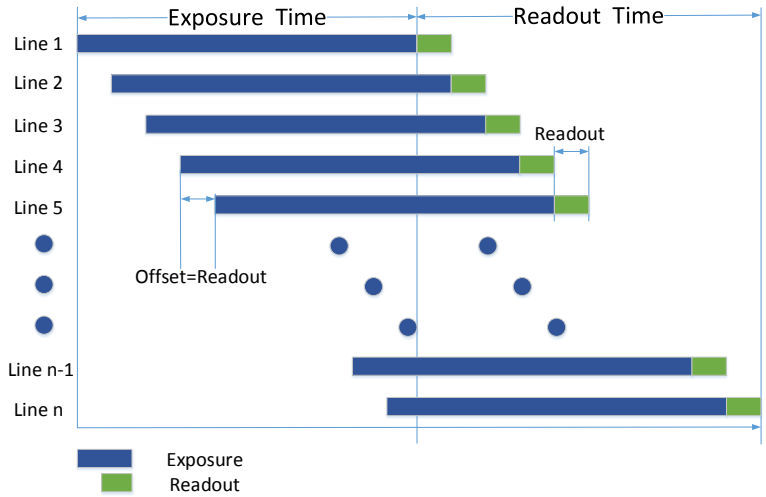

Figure 7-2 Rolling Shutter

7.3 Sensor Shutter Mode

NOTE

The sensor shutter mode may differ by camera models.

The sensor shutter mode allows you to set the operating mode of the camera's electronic shutter. The shutter mode refers to the way in which the image data is captured and processed.

In general, there are 2 sensor shutter modes, including **Global Reset** and **Rolling**.

Global reset means that all of the sensor's pixels start exposing at the same time, but stop exposing at different time.

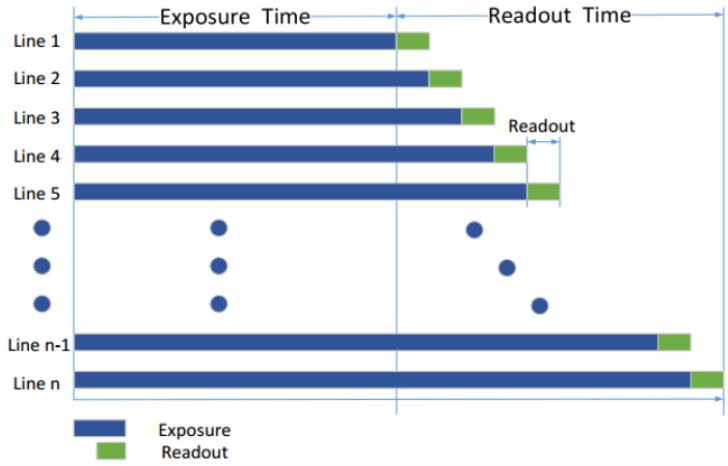

Figure 7-3 Global Reset

Rolling means that the camera exposes the pixel rows one after the other, and it supports sensor's pixels exposure and pixel data readout proceeding at the same time.

You can go to **Acquisition Control** > **Sensor Shutter Mode**, and select **Sensor Shutter Mode** according to actual demands.

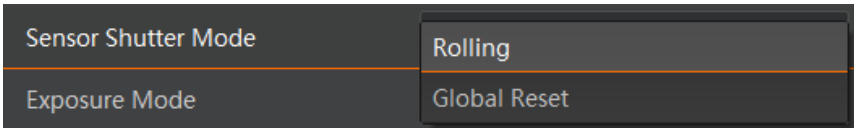

Figure 7-4 Sensor Shutter Mode

7.4 Non-Overlap Exposure and Overlap Exposure

The process that camera captures one frame of image includes two stages, exposure and readout. According to the overlap relation between the exposure time and the readout time, cameras with different sensors can be divided into overlap exposure and non-overlap exposure.

7.4.1 Non-Overlap Exposure

After completing the current frame's exposure and readout, the next frame starts to expose and read out. This process is called non-overlap exposure. The non-overlap exposure's frame period is larger than the sum of the exposure time and the readout time, as shown below.

- **Non-overlap Exposure under Internal Trigger Mode**

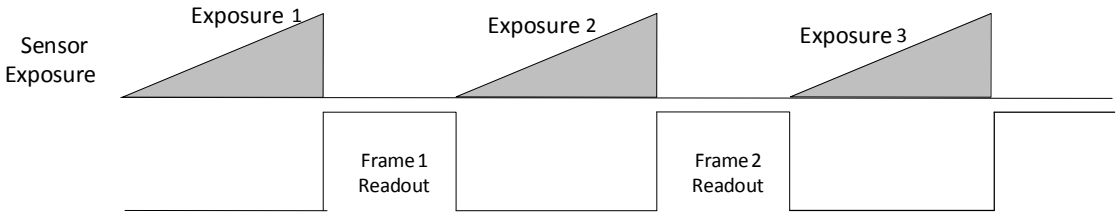

Figure 7-5 Internal Trigger Non-Overlap Exposure

- **Non-overlap Exposure under External Trigger Mode**

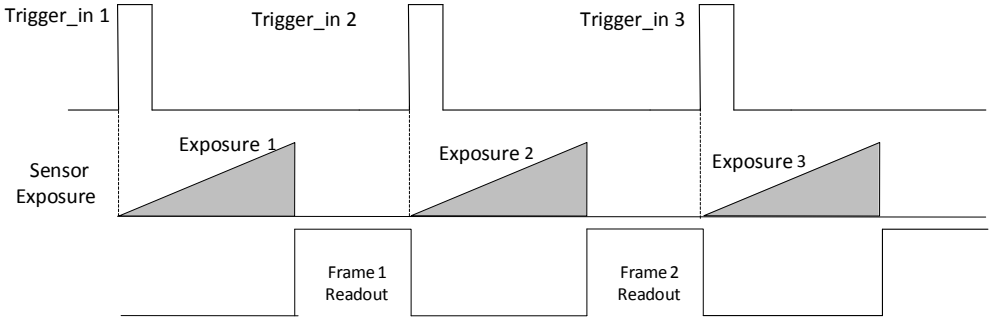

Figure 7-6 External Trigger Non-Overlap Exposure

NOTE

The camera will ignore the external signal in the readout section under this mode.

7.4.2 Overlap Exposure

Overlap exposure refers to the overlap between the current frame exposure and the previous frame readout. In other words, when the previous frame starts to read out, the current frame starts to expose simultaneously, as shown below.

- **Overlap Exposure under Internal Trigger Mode**

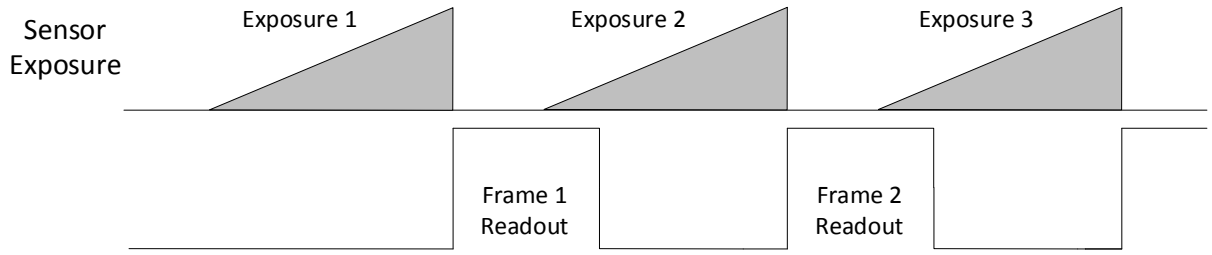

Figure 7-7 Internal Trigger Overlap Exposure

- **Overlap Exposure under External Trigger Mode**

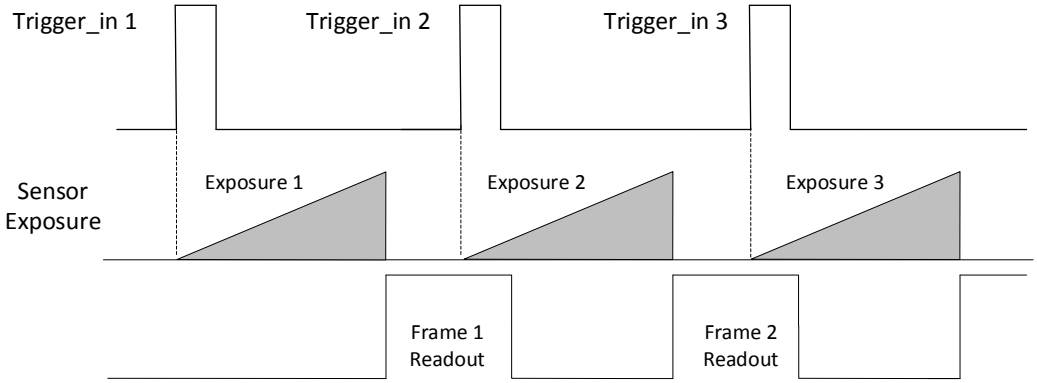

Figure 7-8 External Trigger Overlap Exposure

NOTE

The camera will ignore the external signal in the readout section under this mode.

Chapter 8 Image Acquisition

8.1 Set Frame Rate

Frame rate refers to the image number that is acquired by the camera per second. The higher frame rate, and shorter time used for image acquisition will be. The following 4 factors determines the camera's frame rate in real-time.

- Frame readout time: the frame readout time is related with camera's sensor performance and image height. The lower the image height and less the frame readout time, and the higher the frame rate will be.
- Exposure time: if the reciprocal of max. frame rate that the camera supports is t, and when the configured exposure time is larger than t, the less the exposure time, the higher the frame rate will be. When the configured exposure time is less than or equal to t, exposure time will not influence the frame rate.
- Bandwidth: the larger the bandwidth, the higher the frame rate will be.
- Pixel format: the more bytes pixel format occupy, the lower the frame rate will be.

Click **Acquisition Control** > **Acquisition Frame Rate**, enter **Acquisition Frame Rate** according to actual demands, and enable **Acquisition Frame Rate Control Enable**.

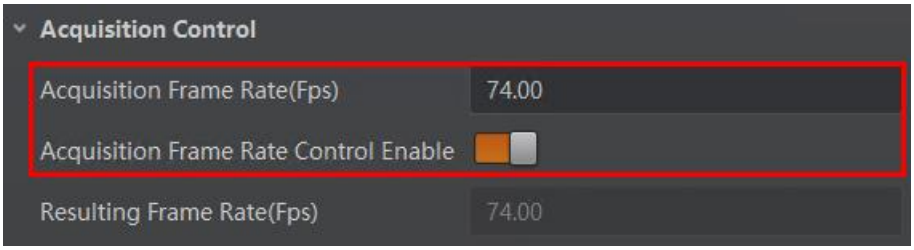

Figure 8-1 Set Frame Rate

NOTE

- If the current real-time frame rate is smaller than configured frame rate, the camera acquires images according to the real-time frame rate.
- If the current real-time frame rate is larger than configured frame rate, the camera acquires images according to the configured frame rate.

You can click **Acquisition Control** > **Resulting Frame Rate** to view the camera's resulting frame rate, as shown below.

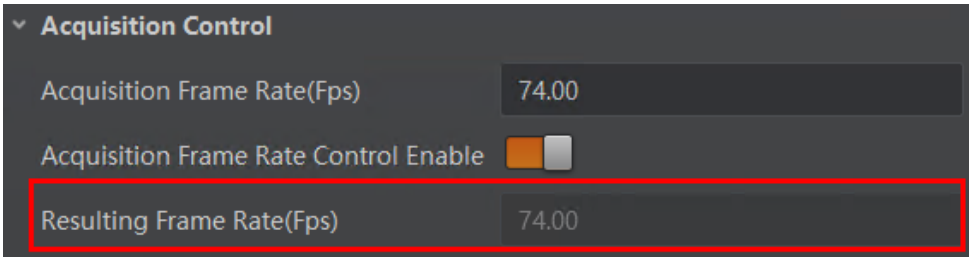

Figure 8-2 Resulting Frame Rate

8.2 Set Trigger Mode

The camera has 2 types of trigger mode, including internal trigger mode and external trigger mode.

- Internal trigger mode: The camera acquires images via its internal signals.
- External trigger mode: The camera acquires images via external signals. These signals can be software signal and hardware signal, including software trigger, hardware trigger, counter trigger, etc..

Click **Acquisition Control** > **Trigger Mode**, and select **Off** or **On** as **Trigger Mode** according to actual demands.

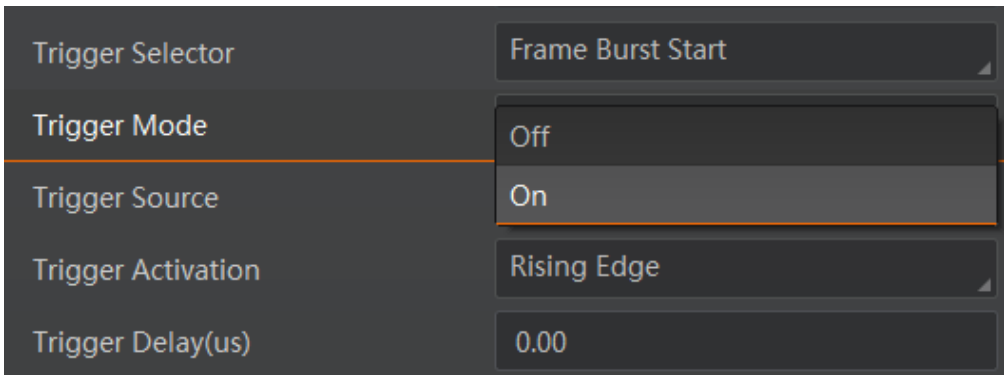

Figure 8-3 Set Trigger Mode

NOTE

Off refers to the internal trigger mode, and **On** refers to the external trigger mode.

8.3 External Trigger Mode

8.3.1 Set External Trigger Source

NOTE

The specific trigger source may differ by camera models.

There are 4 types of external trigger sources, including software trigger, hardware trigger, counter trigger and frame grabber trigger. Their principle and parameter setting are shown below.

Table 8-1 Principle and Parameter of External Trigger Mode

External Trigger Source	Parameter	Parameter Value	Principle
Software Trigger	Acquisition Control > Trigger Source	Software	The software sends trigger signal to the camera via Camera Link interface to acquire images.
Hardware Trigger	Acquisition Control > Trigger Source	Line 0, Line 2	External device connects camera via camera I/O interface. External device sends trigger signal to camera to acquire images.
Counter Trigger	Acquisition Control > Trigger Source	Counter 0	The counter sends trigger signal to the camera to acquire images.
Frame Grabber Trigger	Acquisition Control > Trigger Source	CC 1, CC 2, CC 3, CC 4	The frame grabber sends trigger signal to the camera to acquire images.

Click **Acquisition Control** > **Trigger Source**, and select **Trigger Source** according to actual demands.

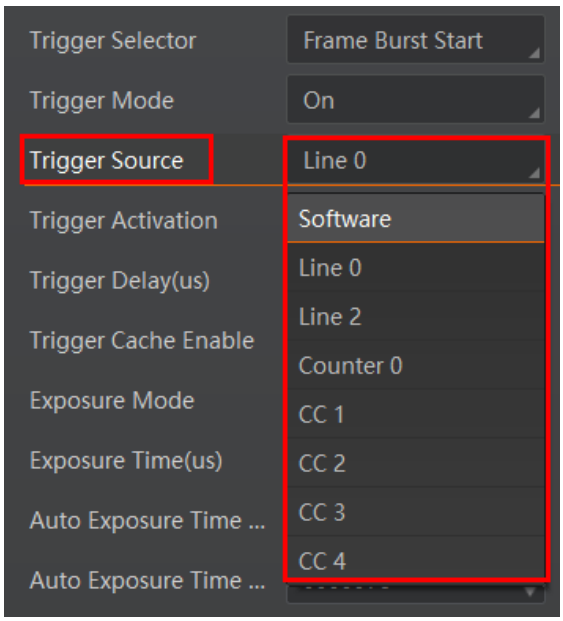

Figure 8-4 Set Trigger Source

NOTE

These 4 external trigger sources are valid only when the **Trigger Mode** is **On**.

8.3.2 Set Software Trigger

Steps:

1. Click **Acquisition Control** > **Trigger Mode**, and select **On** as **Trigger Mode**.
2. Select **Software** as **Trigger Source**, and click **Execute** in **Trigger Software** to send trigger commands.

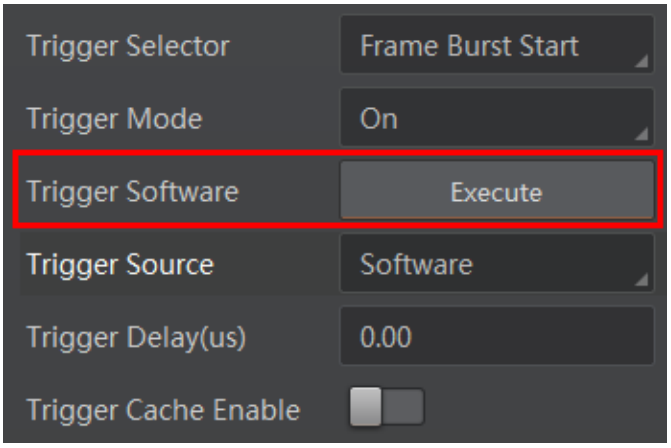

Figure 8-5 Set Software Trigger

8.3.3 Set Hardware Trigger

The camera has 1 Opto-isolated input (Line 0), and 1 bi-directional I/O (Line 2) that can be configured as input signal.

NOTE

Here we take Line 2 as an example to introduce the hardware trigger settings. You select Line 0 or Line 2 as trigger source to set hardware trigger according to actual demands.

Steps:

1. Click **Digital IO Control**.
2. Select **Line 2** as **Line Selector**, and **Input** as **Line Mode** to set Line 2 as input signal.

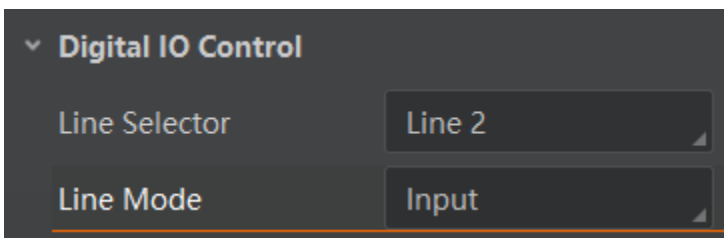

Figure 8-6 Set Line 2 as Input Signal

3. Select **Line 2** as **Trigger Source**.

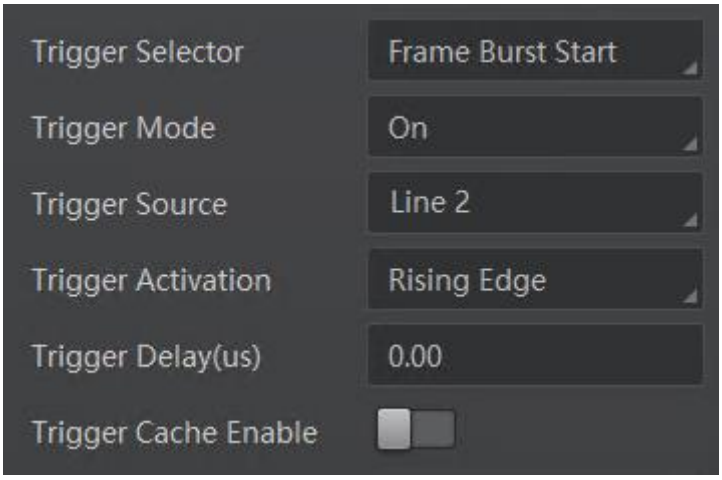

Figure 8-7 Set Hardware Trigger

8.3.4 Set Counter Trigger

NOTE

The specific counter event source may differ by camera models.

The counter trigger provides frequency division to the external trigger signal. You can set counter trigger as shown below.

Steps:

1. Click **Acquisition Control** > **Trigger Mode**, and select **On** as **Trigger Mode**.
2. Select **Counter 0** as **Trigger Source**.

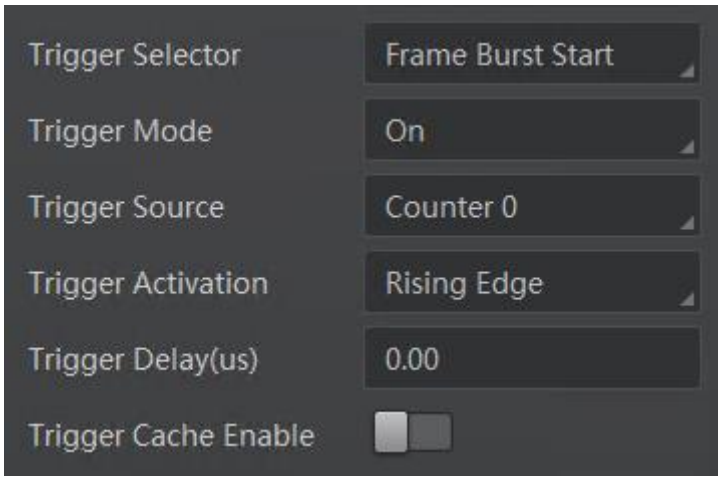

Figure 8-8 Set Counter Trigger

When using counter as trigger source, you need to set relevant parameters under **Counter And Timer Control**. For specific parameter function and setting, please refer to the following table.

Table 8-2 Description of Counter And Timer Control

Parameter	Read/Write	Description
Counter Selector	Read and write	It selects counter source. Counter 0 is available only at present.
Counter Event Source	Read and write	It selects the signal source of counter trigger. Line 0, Line 2, and CC 1/2/3/4 are available. It is disabled by default.
Counter Reset Source	Read and write	It selects the signal source of resetting counter. Software is available only. It is disabled by default.
Counter Reset	Write is available under certain condition	It resets counter and it can be executed when selecting **Software** as **Counter Reset Source**.
Counter Value	Read and write	It is the counter value with the range of 1 to 1023.
Counter Current Value	Read only	It displays the number of executed external trigger.

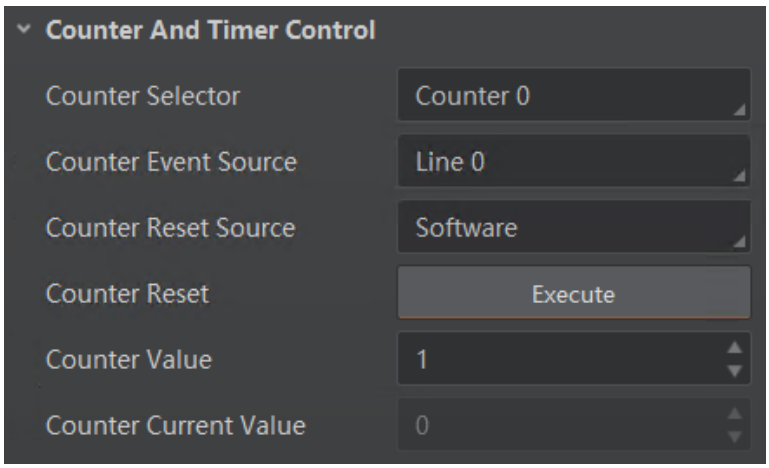

Figure 8-9 Counter Trigger Parameters

8.3.5 Set Frame Grabber Trigger

NOTE

The specific trigger source may differ by camera models.

Click **Acquisition Control** > **Trigger Mode**, select **On** as **Trigger Mode**, and select **CC 1/2/3/4** as **Trigger Source** according to actual demands.

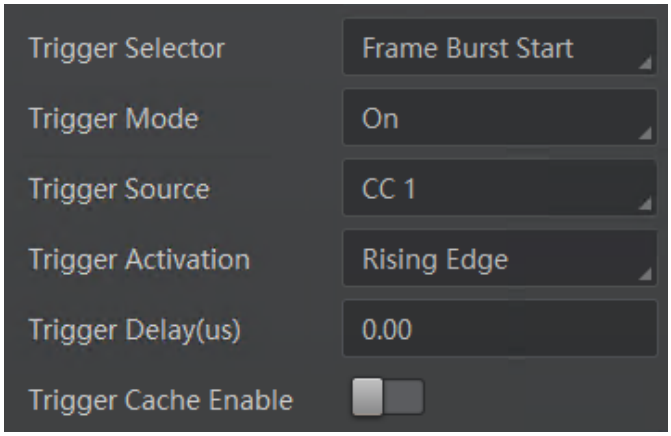

Figure 8-10 Set Frame Grabber Trigger

NOTE

For more details about the frame grabber trigger, refer to the user manual of the frame grabber you purchased.

8.4 Trigger Related Parameters

Under external trigger mode, you can set burst frame count, trigger delay, trigger cache enable, trigger activation and trigger debouncer. Different trigger sources can set various trigger parameters, and their relation is shown below.

Table 8-3 Trigger Source and Trigger Parameter

Trigger Source / Trigger Parameter	Software Trigger	Hardware Trigger	Counter Trigger	Frame Grabber Trigger
Burst Frame Count	√	√	√	√
Trigger Delay	√	√	√	√
trigger Cache Enable	√	√	√	√

Trigger Source / Trigger Parameter	Software Trigger	Hardware Trigger	Counter Trigger	Frame Grabber Trigger
Trigger Activation	×	√	√	√
Trigger Debouncer	×	√	×	√

8.4.1 Set Burst Frame Count

Under external trigger mode, you can set burst frame count as shown below.

Click **Acquisition Control** > **Acquisition Burst Frame Count**, and enter **Acquisition Burst Frame Count** according to actual demands. Its range is from 1 to 1023.

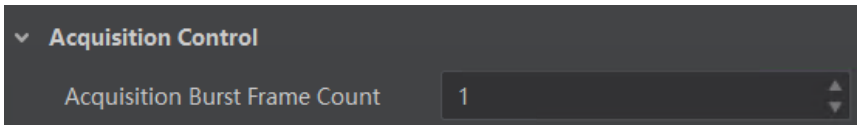

Figure 8-11 Set Burst Frame Count

When **Acquisition Burst Frame Count** is 1, it is in single frame trigger mode. When **Acquisition Burst Frame Count** is larger than 1, it is in multi-frame trigger mode. If **Acquisition Burst Frame Count** is n and when inputting 1 trigger signal, the camera stops acquiring images after exposing n times and outputs n frame images. The sequence diagram of burst frame count is shown below.

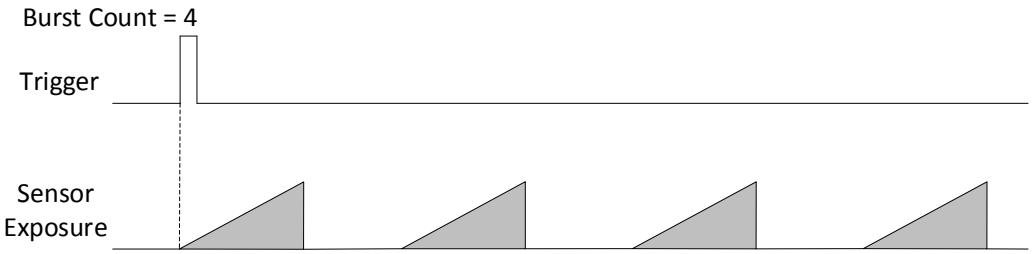

Figure 8-12 Sequence Diagram of Burst Frame Count

8.4.2 Set Trigger Delay

From camera receiving signal and responding, this period is trigger delay. Its sequence diagram is shown below.

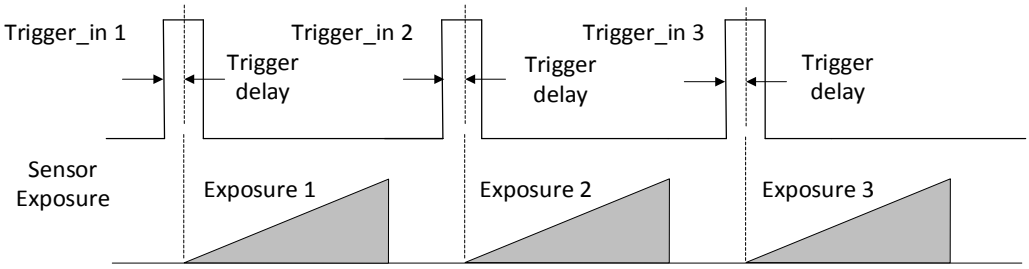

Figure 8-13 Signal Delay Sequence Diagram

You can set proper value in **Trigger Delay**, and its range is from 0 μs to 16000000 μs.

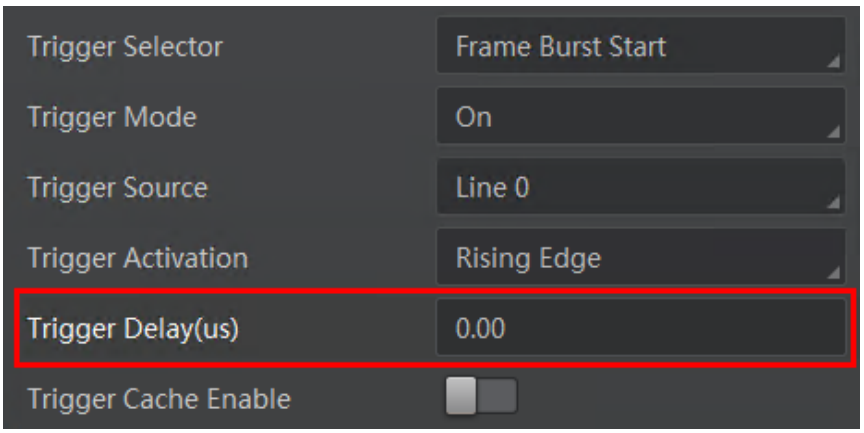

Figure 8-14 Set Trigger Delay

8.4.3 Set Trigger Cache Enable

The camera has the function of Trigger Cache Enable. During the triggering process, if the camera receives new trigger signal, it will save and process the signal if you enable this function. Trigger cache enable can save up to 2 trigger signals.

Click **Acquisition Control > Trigger Cache Enable**, and enable **Trigger Cache Enable**.

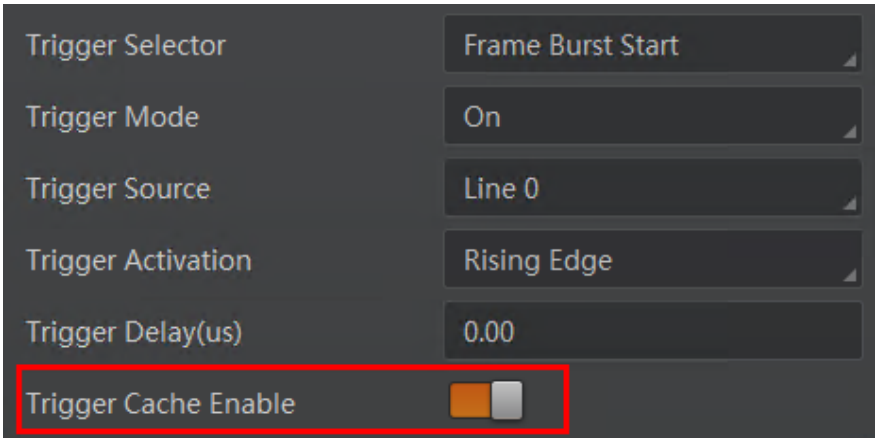

Figure 8-15 Enable Trigger Cache Enable

If the camera receives the 1st trigger signal first, and the camera receives the 2nd trigger signal during processing the 1st trigger signal.

- Disable Trigger Cache Enable: the 2nd trigger signal will be filtered without processing.
- Enable Trigger Cache Enable: the 2nd trigger signal will be saved.

If the 1st frame image's exposure time of the 2nd trigger signal is not earlier than the camera's last frame creation time of the 1st trigger signal, and then the 2nd trigger signal's 1st frame image is created normally.

If the 1st frame image's exposure time of the 2nd trigger signal is earlier than the camera's last frame creation time of the 1st trigger signal, and then the camera will delay this exposure time. Thus making sure this exposure time is not earlier than the camera's last frame creation time of the 1st trigger signal.

8.4.4 Set Trigger Activation

The camera supports trigger acquisition in the rising edge, falling edge, level high, or level low of the external signal. The principle and parameter of trigger activation are shown below.

Table 8-4 Trigger Activation Principle and Parameter

Trigger Activation	Parameter	Parameter Value	Principle
Rising Edge	Acquisition Control > Trigger Activation	Rising Edge	Rising Edge refers to the rising edge of the trigger signal is valid, that is camera exposure and acquisition at the beginning of the rising edge of the trigger signal.
Falling Edge	Acquisition Control > Trigger Activation	Falling Edge	Falling Edge refers to the falling edge of the trigger signal is valid, that is camera exposure and acquisition at the beginning of the falling edge of the trigger signal.
Level High	Acquisition Control > Trigger Activation	Level High	Level High refers to the level high of the trigger signal is valid. As long as trigger signal is in level high, the camera keeps exposure and acquisition status.
Level Low	Acquisition Control >	Level Low	Level Low refers to the level low of the trigger signal is valid.

Trigger Activation	Parameter	Parameter Value	Principle
	Trigger Activation		As long as trigger signal is in level low, the camera keeps exposure and acquisition status.

Click **Acquisition Control > Trigger Activation**, and select **Rising Edge**, **Falling Edge**, **Level High** or **Level Low** as **Trigger Activation** according to actual demands.

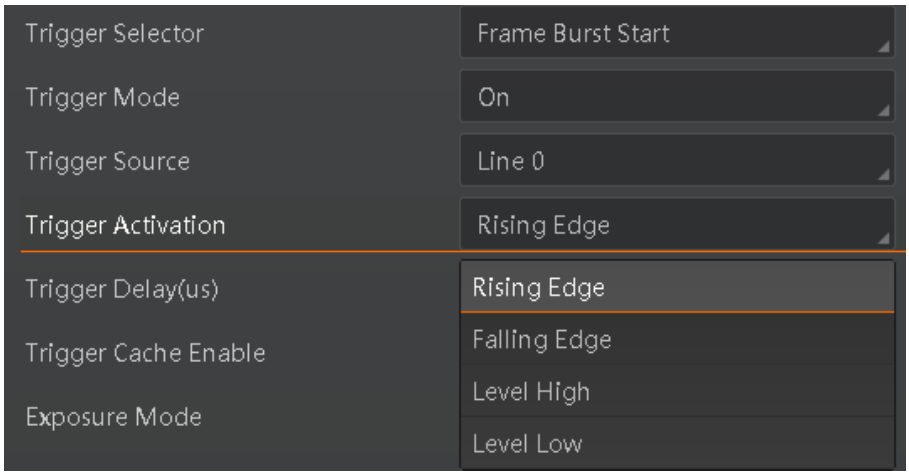

Figure 8-16 Set Trigger Activation

8.4.5 Set Trigger Debouncer

The external trigger input signal of the camera may have signal bounce that may cause false trigger. Thus, it is necessary to debounce the external trigger signal, and its sequence diagram is shown below.

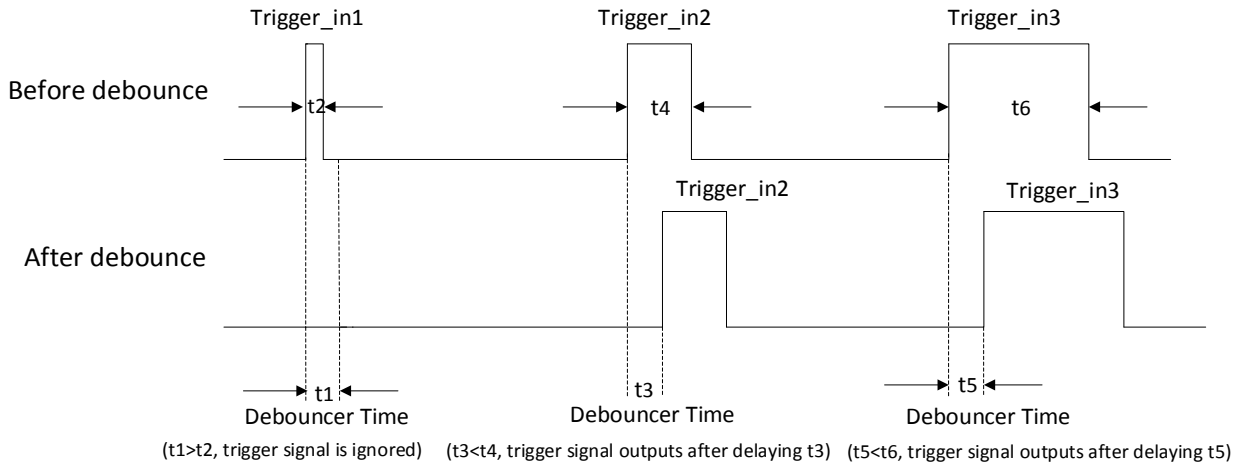

Figure 8-17 Trigger Debouncer Sequence Diagram

Click **Digital IO Control > Line Debouncer Time**, enter **Line Debouncer Time**, and its range is from 1 μs to 1000000 μs.

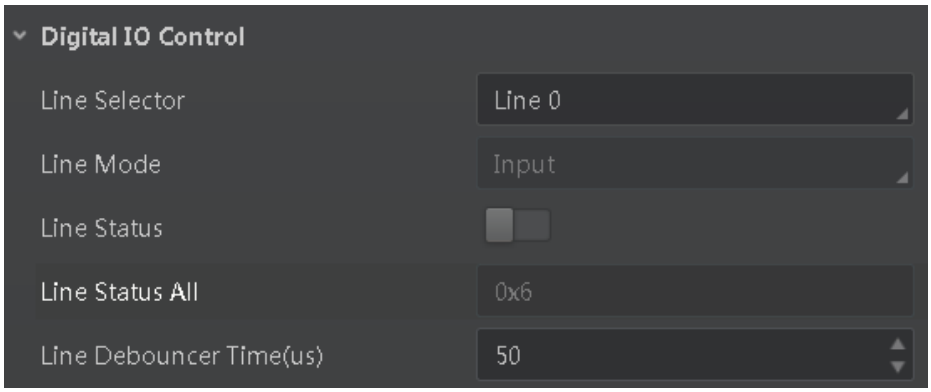

Figure 8-18 Set Trigger Debouncer

Chapter 9 I/O Output

9.1 Select Output Signal

The camera has 1 opto-isolated output (Line 1), and 1 bi-directional I/O (Line 2) that can be configured as output signal.

NOTE

Here we take Line 2 as an example to introduce how to select output signal. You select Line 1 or Line 2 as line selector according to actual demands.

Click **Digital IO Control**, select **Line 2** as **Line Selector**, and select **Strobe** as **Line Mode** to set line 2 as output signal.

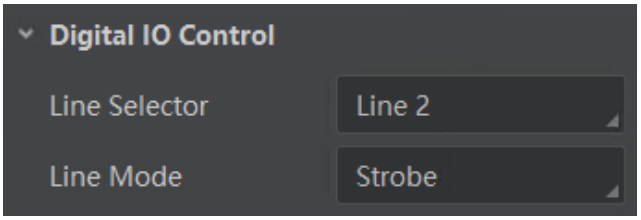

Figure 9-1 Set Line 2 as Output Signal

9.2 Set Output Signal

The output signal of the camera is switch signal that can be used to control external devices such as light source, PLC, etc.

9.2.1 Enable Level Inverter

The line inverter function allows the camera to invert the electrical signal level of an I/O line, and meets requirements of different devices for high or low electrical signal level. All high signals are converted to low signals and vice versa.

Click **Digital IO Control** > **Line Selector**, select line for **Line Selector**, and enable **Line Inverter**.

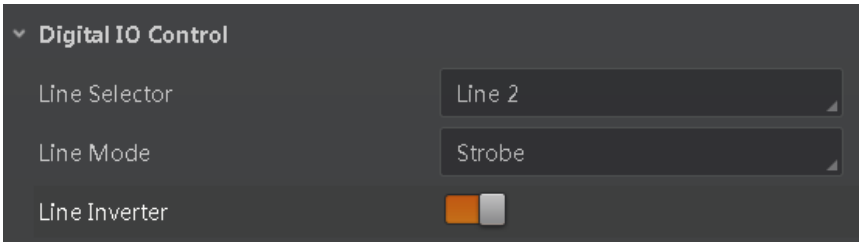

Figure 9-2 Enable Line Inverter

NOTE

The **Line Inverter** parameter is disabled by default.

9.2.2 Enable Strobe Signal

The strobe signal is used to directly output I/O signal to external devices when camera's event source occurs.

Click **Digital IO Control**, select different output events as **Line Source**, and enable **Strobe Enable**.

NOTE

The specific line source may differ by camera models.

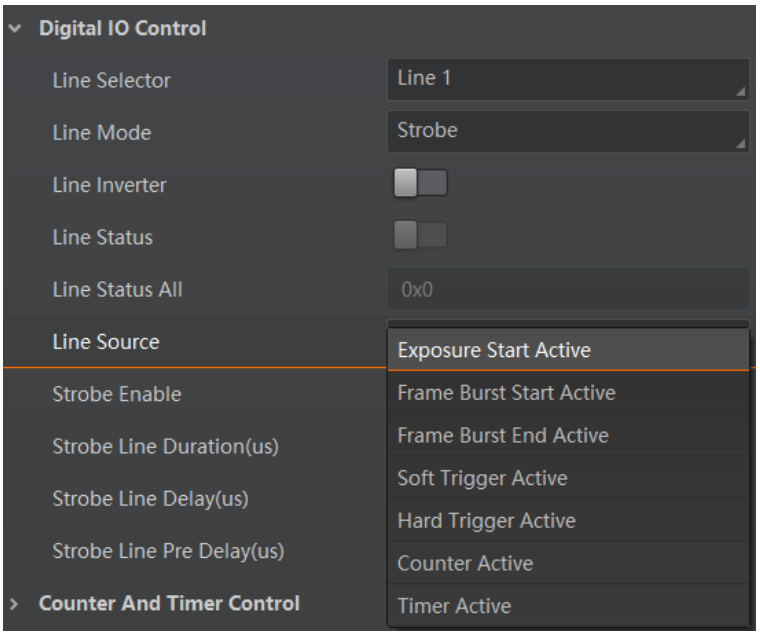

Figure 9-3 Set Line Source

For specific **Line Source**, refer to following table for details.

Table 9-1 Line Source

No.	Name	Description
1	Exposure Start Active	It refers to output one I/O edge signal when starting exposure.
2	Frame Burst Start Active	It refers to output one I/O edge signal when starting triggering and acquiring images under Burst mode.
3	Frame Burst End Active	It refers to output one I/O edge signal when stopping triggering and acquiring images under Burst mode.

No.	Name	Description
4	Soft Trigger Out	It refers to output one I/O edge signal when software trigger acquisition.
5	Hard Trigger Active	It refers to output one I/O edge signal when hardware trigger acquisition.
6	Count Active	It refers to output one I/O edge signal when counter output is enabled.
7	Timer Active	It refers to output one I/O edge signal when timer output is enabled.

Regarding strobe signal, you can also set its duration, delay and pre delay.

- **Set Strobe Line Duration**

After enabling strobe signal, you can set its duration. Click **Digital IO Control** > **Strobe Line Duration**, and enter **Strobe Line Duration**.

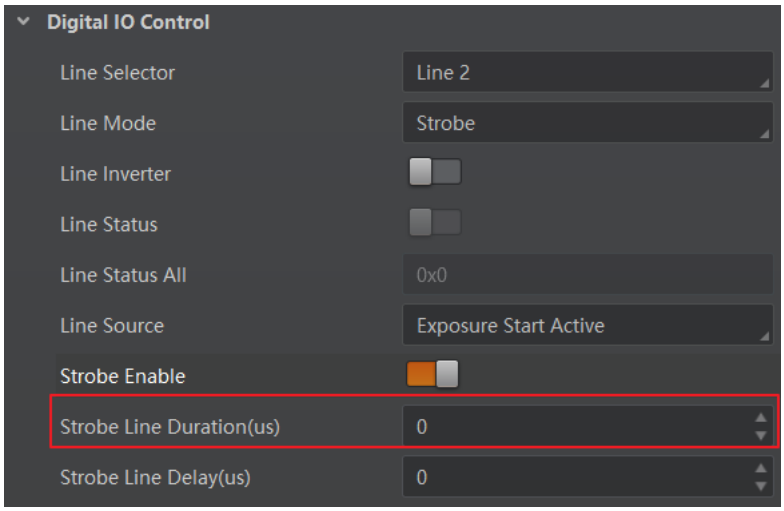

Figure 9-4 Set Strobe Line Duration

NOTE

When the **Strobe Line Duration** value is 0, the strobe duration is equal to the exposure time. When the **Strobe Line Duration** value is not 0, the strobe duration is equal to **Strobe Line Duration** value.

- **Set Strobe Line Delay**

The camera supports setting strobe line delay to meet actual demands. When exposure starts, the strobe output doesn't take effect immediately. Instead, the strobe output will delay according to the strobe line delay setting.

Click **Digital IO Control** > **Strobe Line Delay**, and enter **Strobe Line Delay**, and its range is from 0 μs to 10000 μs.

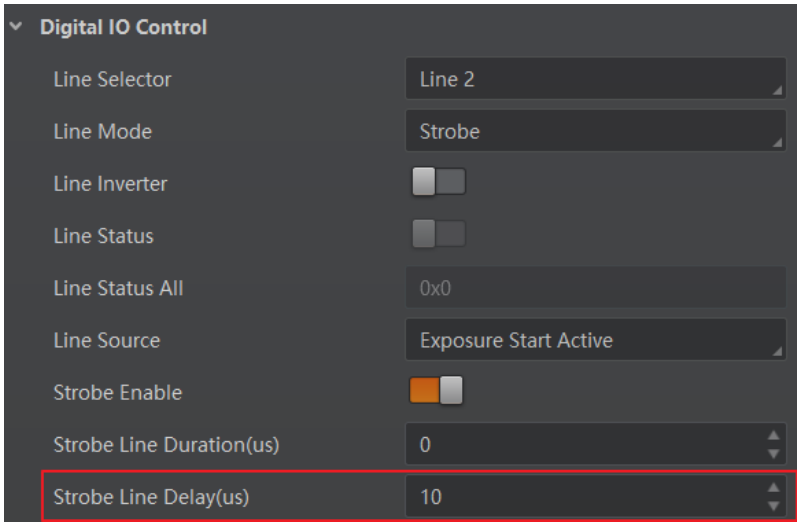

Figure 9-5 Set Strobe Line Delay

The sequence diagram of strobe line delay is shown below.

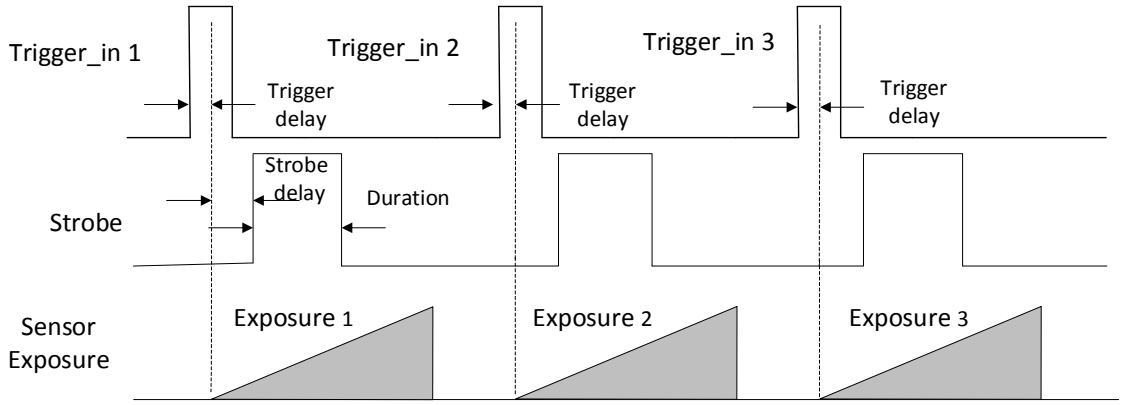

Figure 9-6 Sequence Diagram of Strobe Line Delay

- **Set Strobe Line Pre Delay**

The camera also supports the function of strobe line pre delay, which means that the strobe signal takes effect early than exposure. This function is applied to the external devices that have slow response speed.

Click **Digital IO Control** > **Strobe Line Pre Delay**, and enter **Strobe Line Pre Delay**, and its range is from 0 μs to 5000 μs.

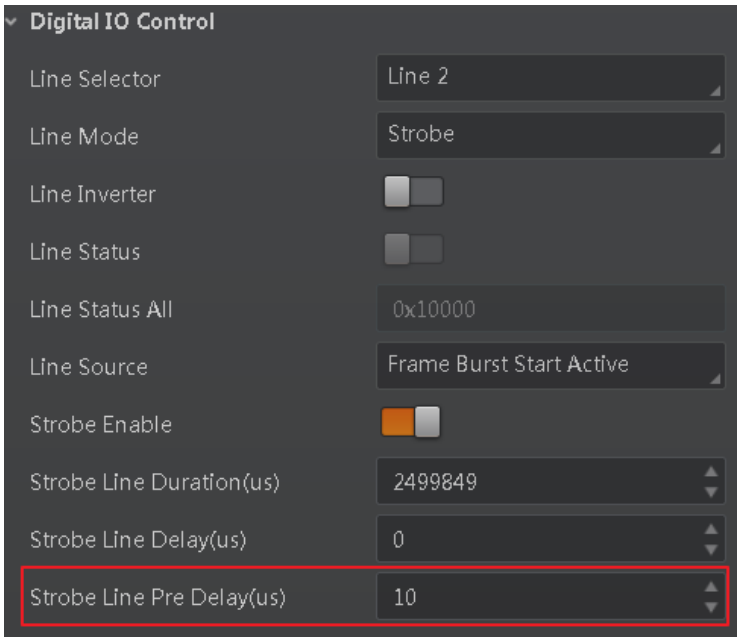

Figure 9-7 Set Strobe Line Pre Delay

The sequence diagram of strobe line pre delay is shown below.

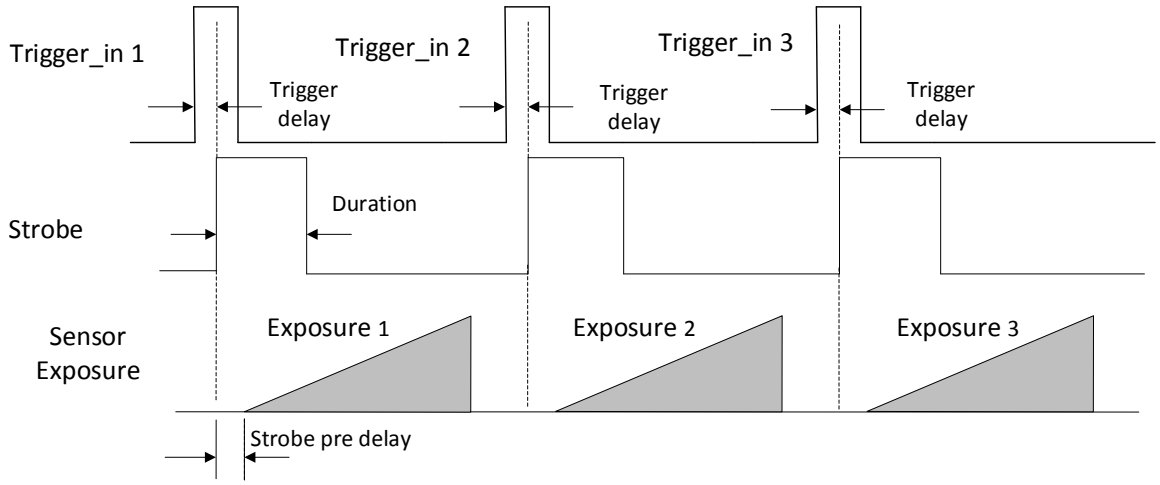

Figure 9-8 Sequence Diagram of Strobe Line Pre Delay

Chapter 10 I/O Electrical Feature and Wiring

10.1 I/O Electrical Feature

10.1.1 Line 0 Opto-isolated Input Circuit

The Line 0 opto-isolated input circuit in camera I/O control is shown below.

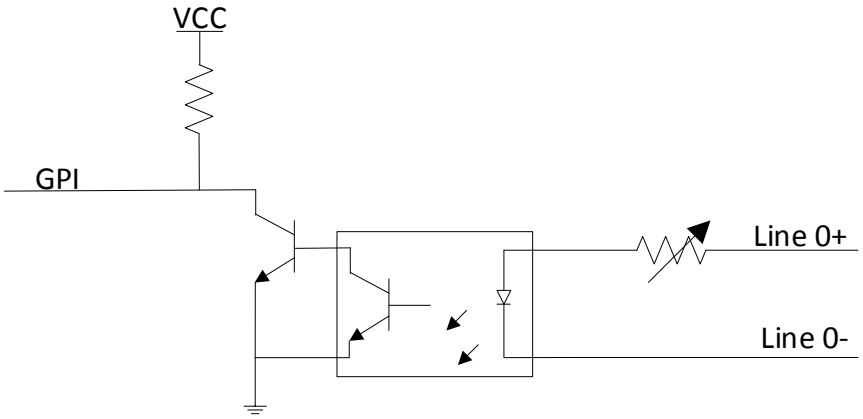

Figure 10-1 Line 0 Internal Circuit

NOTE

The maximum input current of Line 0 is 25 mA.

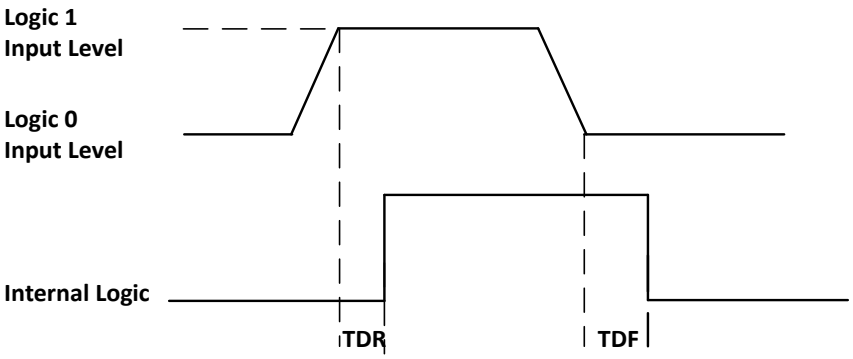

Figure 10-2 Input Logic Level

Table 10-1 Input Electrical Feature

Parameter Name	Parameter Symbol	Value
Input Logic Level Low	VL	0 VDC to 1 VDC
Input Logic Level High	VH	1.5 VDC to 24 VDC
Input Rising Delay	TDR	1.8 μs to 4.6 μs
Input Falling Delay	TDF	16.8 μs to 22 μs

NOTE

- Make sure the input voltage is not from 1 VDC to 1.5 VDC as the electric status between these two values are not stable.
- The breakdown voltage is 30 VDC, and keep voltage stable.

10.1.2 Line 1 Opto-isolated Output Circuit

The Line 1 opto-isolated output circuit in camera I/O control is shown below.

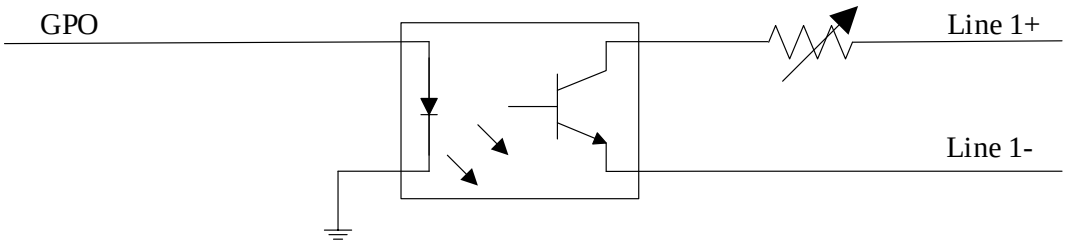

Figure 10-3 Line 1 Internal Circuit

NOTE

The maximum output current of Line 1 is 25 mA.

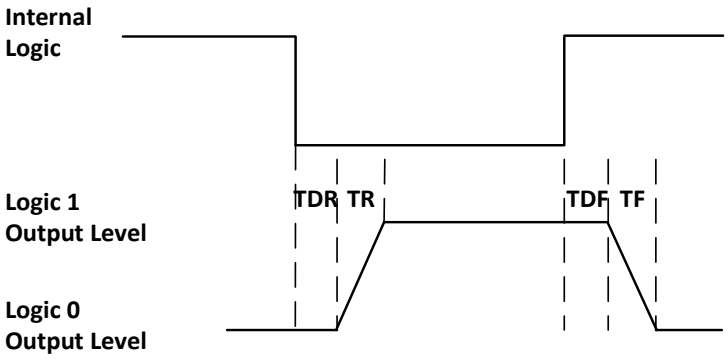

Figure 10-4 Output Logic Level

Opto-isolated output electric feature is shown in below (when the external voltage is 3.3 VDC and the external resistance is 1 KΩ).

Table 10-2 Output Electric Feature

Parameter Name	Parameter Symbol	Value
Output Logic Level Low	VL	575 mV
Output Logic Level High	VH	3.3 V
Output Rising Time	TR	8.4 μs
Output Falling Time	TF	1.9 μs
Output Rising Delay	TDR	15 μs to 60 μs
Output Falling Delay	TDF	3 μs to 6 μs

With different external voltage and resistance, the corresponding current and the parameter of output logic level low are shown below.

Table 10-3 Parameter of Output Logic Level Low

External Voltage	External Resistance	VL	Output Current
3.3 VDC	1 KΩ	575 mV	2.7 mA
5 VDC	1 KΩ	840 mV	4.1 mA
12 VDC	2.4 KΩ	915 mV	4.6 mA
24 VDC	4.7 KΩ	975 mV	4.9 mA

10.1.3 Line 2 Bi-direction I/O Circuit

The Line 2 bi-direction I/O circuit in camera I/O control is shown below. The Line 2 can be configured as input signal or as output signal.

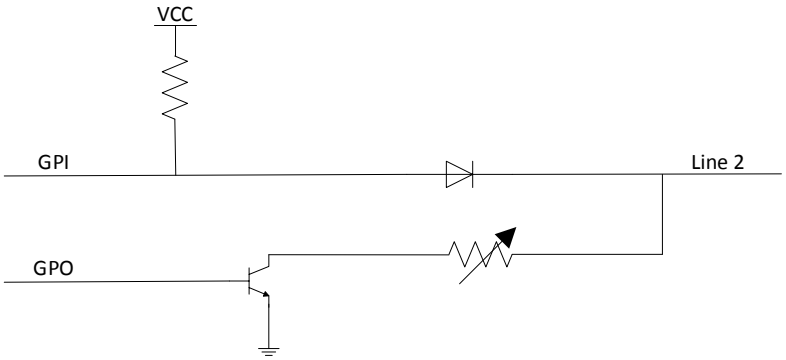

Figure 10-5 Line 2 Internal Circuit

Line 2 Configured as Input

With the condition of 100 Ω and 5 VDC, the logic level and electrical feature of configuring Line 2 as output are shown below.

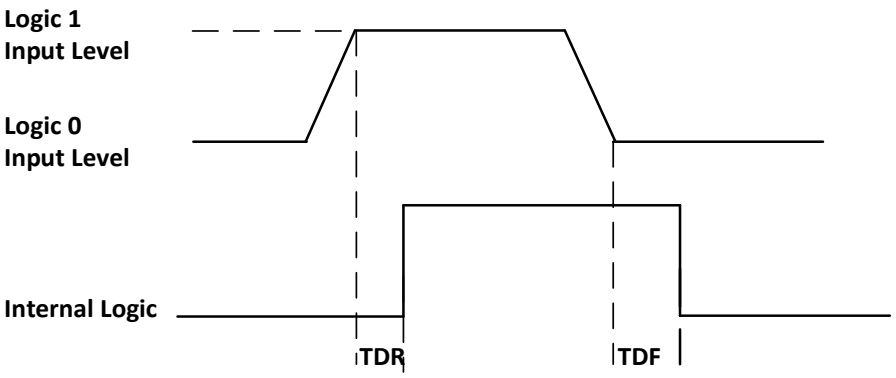

Figure 10-6 Input Logic Level

Table 10-4 Electrical Feature of Line 2 Input

Parameter Name	Parameter Symbol	Value
Input Logic Level Low	VL	0 VDC to 0.5 VDC
Input Logic Level High	VH	1.5 VDC to 24 VDC
Input Rising Time	TDR	< 1 μs
Input Falling Time	TDF	< 1 μs

NOTE

- Make sure the input voltage is not from 0.5 VDC to 1.5 VDC as the electric status between these two values are not stable.

- The breakdown voltage is 30 VDC, and keep voltage stable.
- To prevent damage to the GPIO pin, please connect GND first and then input voltage in Line 2.

Line 2 Configured as Output

When the environment temperature is 25 °C (77 °F), the relation among external voltage, resistance and the output level low is shown below.

Table 10-5 Parameter of Output Logic Level Low

External Voltage	External Resistance	VL (GPIO2)
3.3 V	1 KΩ	160 mV
5 V	1 KΩ	220 mV
12 V	1 KΩ	460 mV
24 V	1 KΩ	860 mV
30 V	1 KΩ	970 mV

NOTE

The maximum current is 25 mA and the output impedance is 40 Ω.

When the voltage of external resistance (1 KΩ) is pulled up to 5 VDC, the logic level and electrical feature of configuring Line 2 as output are shown below.

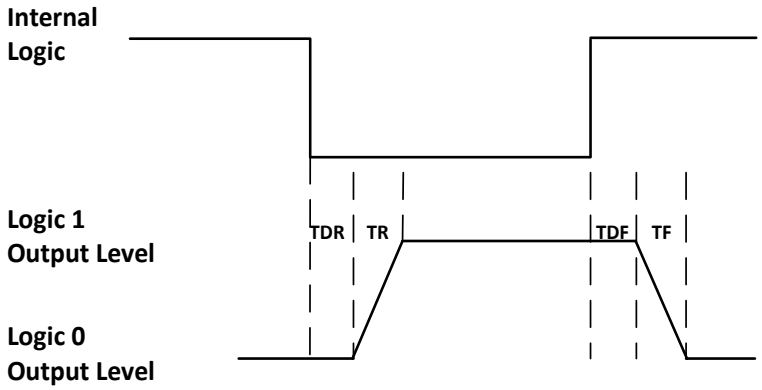

Figure 10-7 Output Logic Level

Table 10-6 Electrical Feature of Line 2 Output

Parameter Name	Parameter Symbol	Value
Output Logic Level Low	VL	220 mV
Output Logic Level High	VH	4.75 VDC
Output Rising Time	TR	0.06 μs
Output Falling Time	TF	0.016 μs
Output Rising Delay	TDR	0 μs to 4 μs
Output Falling Delay	TDF	< 1 μs

10.2 I/O Wiring

The camera has different appearances and I/O interfaces with varied models. Here we take one type of the camera as an example to introduce I/O wiring.

NOTE

For specific camera appearance, cable color and I/O wiring, please refer to the actual one you got.

10.2.1 Line 0 Wiring

When the camera uses Line 0 as hardware trigger source, wirings are different with different external devices of input signal.

- PNP Device

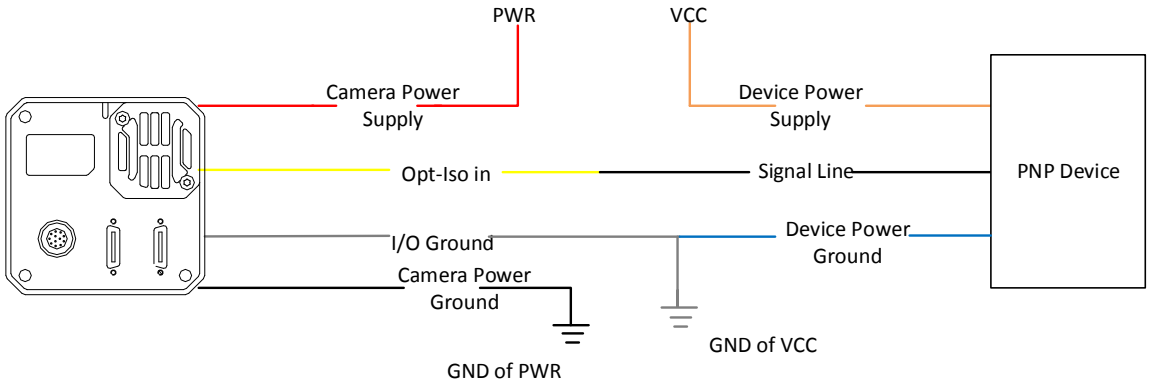

Figure 10-8 Line 0 Connecting to PNP Device

- NPN Device

If the VCC of NPN device is 24 VDC, and it is recommended to use 1 KΩ to 4.7 KΩ pull-up resistor.

If the VCC of NPN device is 12 VDC, and it is recommended to use 1 KΩ pull-up resistor.

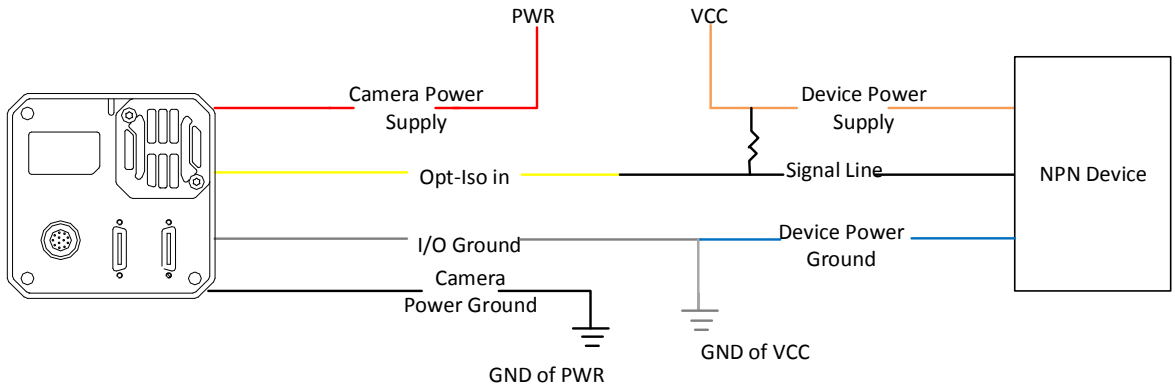

Figure 10-9 Line 0 Connecting to NPN Device

- Switch

If the VCC of switch is 24 VDC, and it is recommended to use 1 KΩ to 4.7 KΩ resistor to protect circuit.

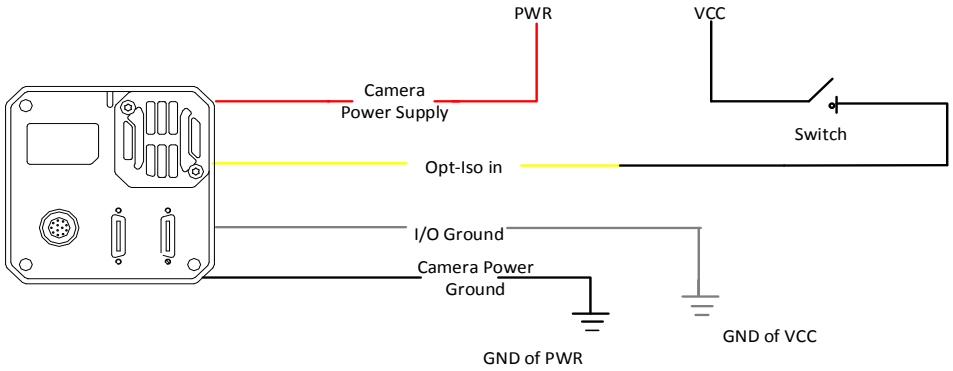

Figure 10-10 Line 0 Connecting to a Switch

10.2.2 Line 1 Wiring

When the camera uses Line 1 as output signal, wirings are different with different external devices.

- PNP Device

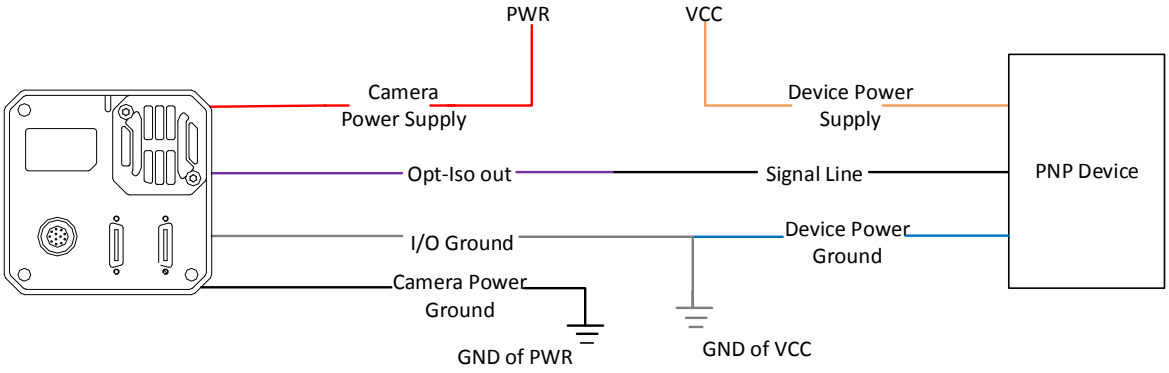

Figure 10-11 Line 1 Connecting to PNP Device

- NPN Device

If the VCC of NPN device is 24 VDC, and it is recommended to use 1 KΩ to 4.7 KΩ pull-up resistor.

If the VCC of NPN device is 12 VDC, and it is recommended to use 1 KΩ pull-up resistor.

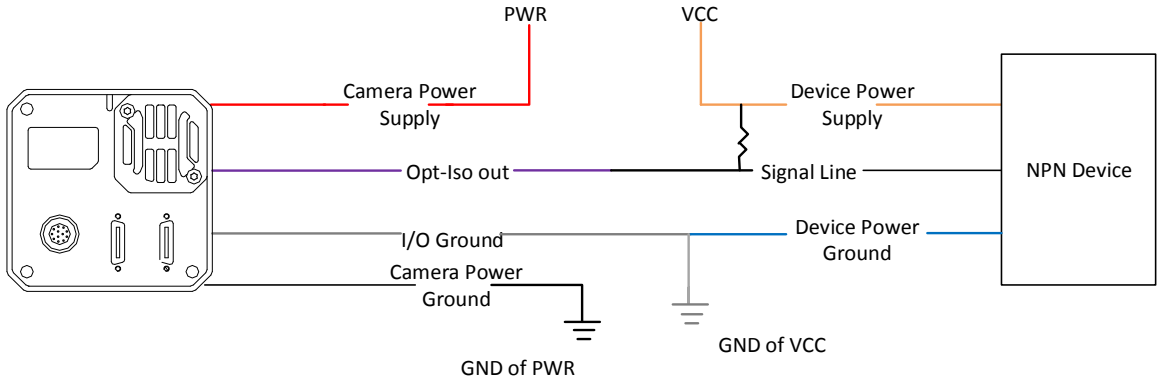

Figure 10-12 Line 1 Connecting to NPN Device

10.2.3 Line 2 Wiring

As bi-direction I/O Circuit, Line 2 can be used as both input signal and output signal.

NOTE

Cameras with TEC (Thermo-Electric Cooler) function do not have bi-direction I/O function.

Line 2 Configured as Input

When the camera uses Line 2 as hardware trigger source, wirings are different with different external devices of input signal.

- PNP Device

It is recommended to use 330 Ω pull-down resistor.

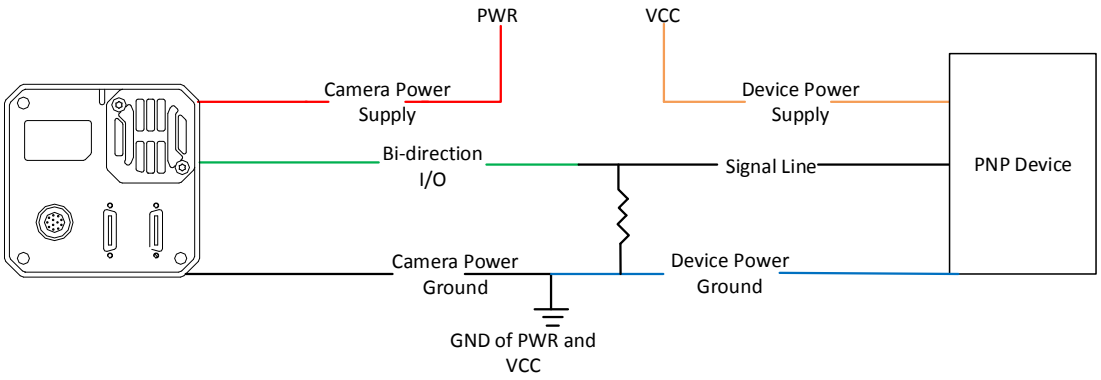

Figure 10-13 Line 2 Connecting to PNP Device as Input

- NPN Device

If the VCC of NPN device is 24 VDC, and it is recommended to use 1 KΩ to 4.7 KΩ pull-up resistor.

If the VCC of NPN device is 12 VDC, and it is recommended to use 1 KΩ pull-up resistor.

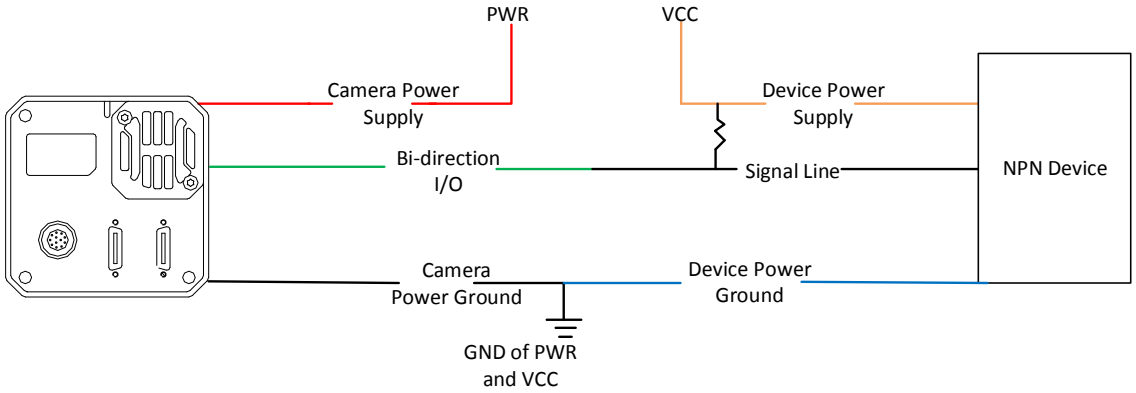

Figure 10-14 Line 2 Connecting to NPN Device as Input

- Switch

The switch value can provide low electrical level to trigger line 2.

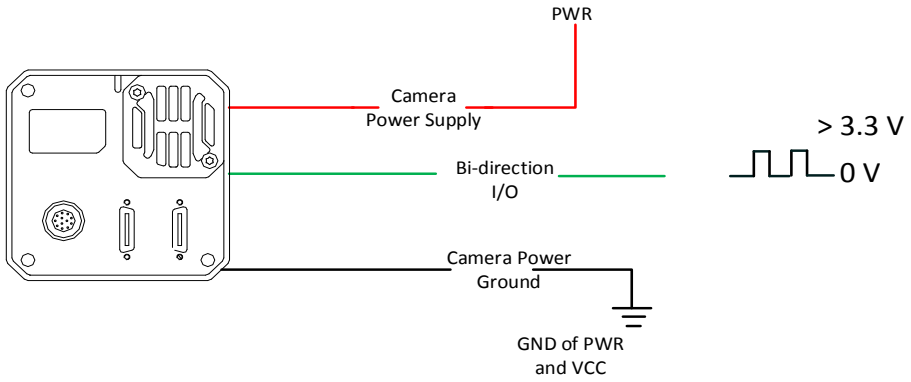

Figure 10-15 Line 2 Connecting to a Switch as Input

Line 2 Configured as Output

When the camera uses Line 2 as output signal, wirings are different with different external devices.

- PNP Device

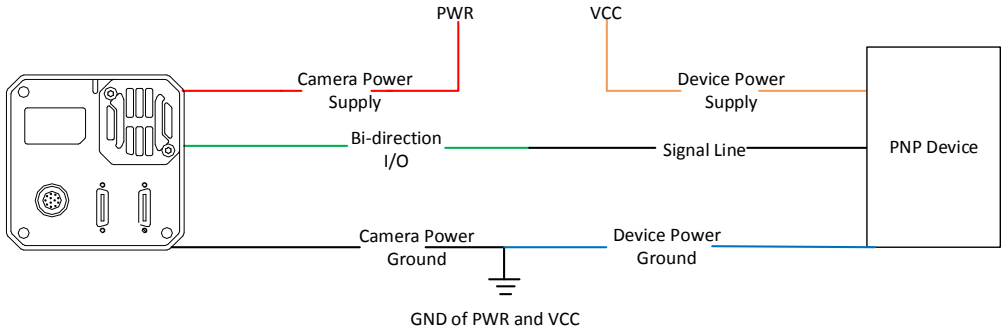

Figure 10-16 Line 2 Connecting to PNP Device as Output

- NPN Device

If the VCC of NPN device is 24 VDC, and it is recommended to use 1 KΩ to 4.7 KΩ pull-up resistor.

If the VCC of NPN device is 12 VDC, and it is recommended to use 1 KΩ pull-up resistor.

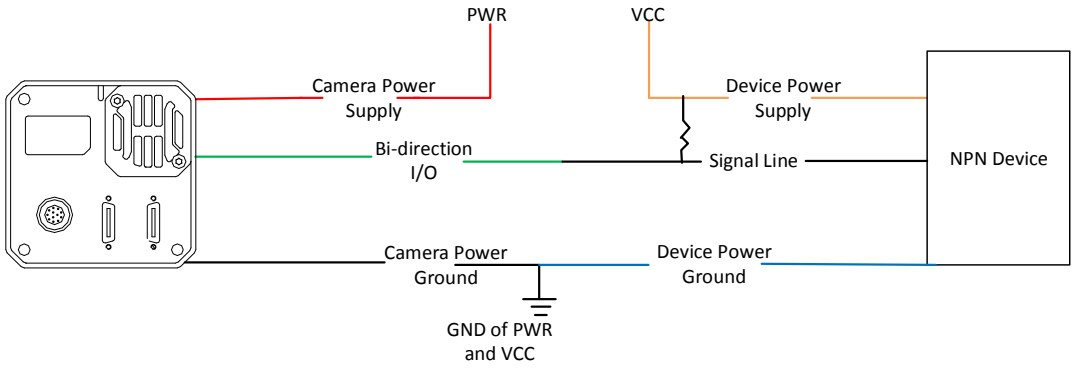

Figure 10-17 Line 2 Connecting to NPN Device as Output

Chapter 11 Image Parameter

11.1 View Resolution

Click **Image Format Control**, and view **Width Max** and **Height Max**. **Width Max** stands for the max. pixels per inch in width direction and **Height Max** stands for the max. pixels per inch in height direction.

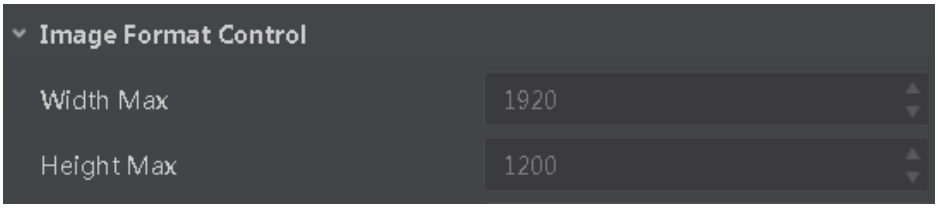

Figure 11-1 View Resolution

NOTE

The camera displays the image with max. resolution by default.

11.2 Set ROI

If you are only interested in a certain region of the image, you can set a Region of Interest (ROI) for the camera. Setting Region of Interest can reduce the bandwidth of the image being transmitted. Thus increasing the frame rate to some extent.

NOTE

- The camera currently supports 1 ROI only, that is, there is **Region 0** for **Region Selector** parameter only.
- Region of interest can be set only when you stop real-time acquisition.

Click **Image Format Control** > **Region Selector**, and enter **Width**, **Height**, **Offset X**, and **Offset Y**.

- Width: it stands for horizontal resolution in ROI area.
- Height: it stands for vertical resolution in ROI area.
- Offset X: it refers to the horizontal coordinate of the upper left corner of the ROI.
- Offset Y: it refers to the vertical coordinate of the upper left corner of the ROI.

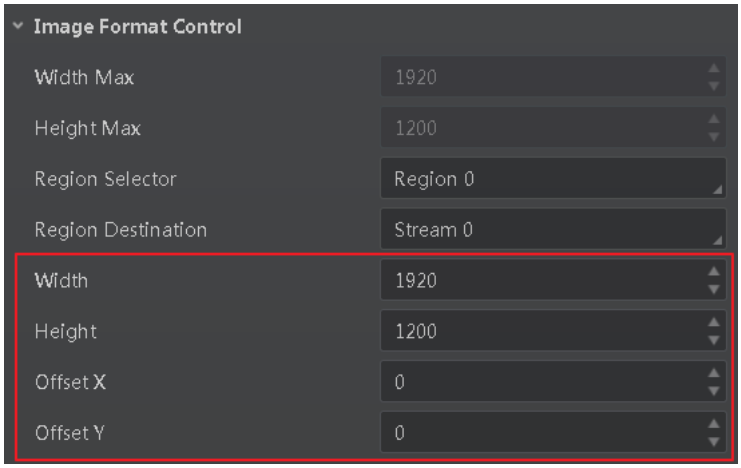

Figure 11-2 Set ROI

NOTE

- The **Width** value plus **Offset X** value should not be larger than **Width Max** parameter value, **Height** value plus **Offset Y** value should not be larger than **Height Max** parameter value
- The ROI function may differ by camera models.

11.3 Set Image Reverse

NOTE

The image reverse function may differ by camera models.

Reverse X refers to the image reverses in a horizontal way, and **Reverse Y** refers to the image reverses in a vertical way.

You can click **Image Format Control**, and enable **Reverse X** or **Reverse Y** according to actual demands.

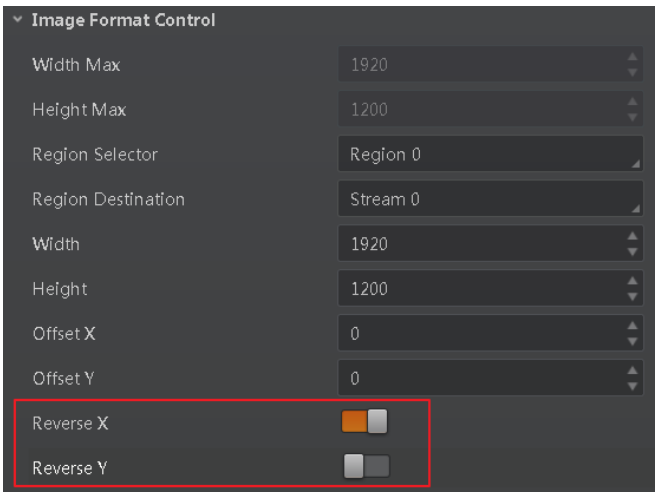

Figure 11-3 Set Image Reverse

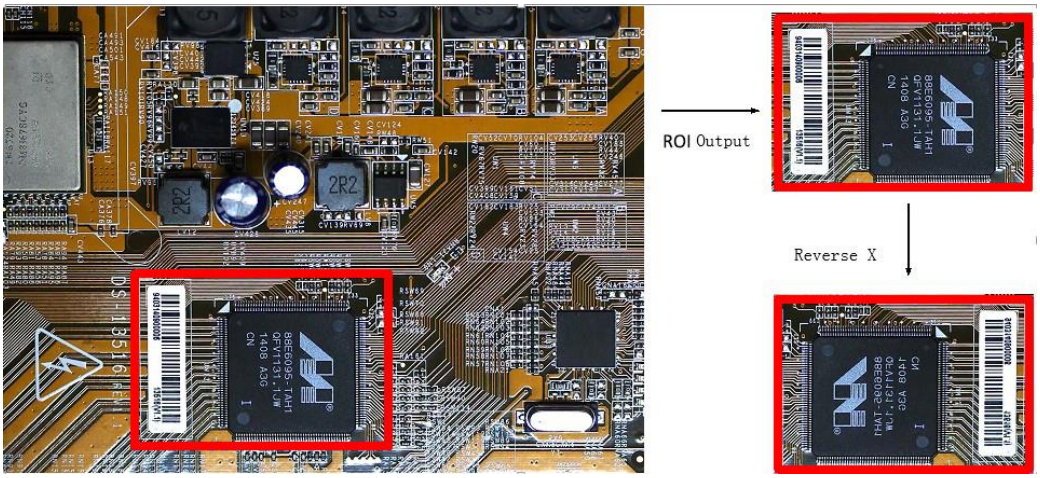

Figure 11-4 Image Reverse Comparison

11.4 Set ADC Bit Depth

NOTE

The function of ADC bit depth may differ by camera models.

ADC bit depth allows you to change the bit depth of the data output by the image sensor. Click **Image Format Control** > **ADC Bit Depth**, and set **ADC Bit Depth** according to actual demands.

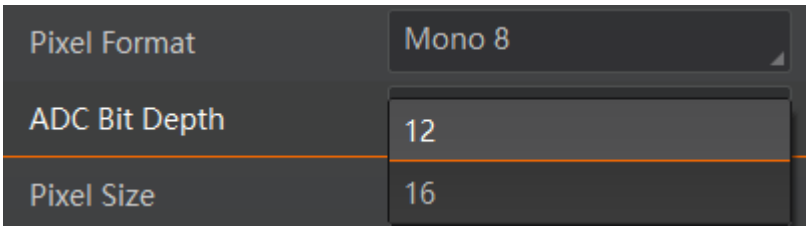

Figure 11-5 Set ADC Bit Depth

NOTE

Refer to Table 11-1 for relation among ADC bit depth, pixel format and pixel size.

11.5 Set Pixel Format

NOTE

The pixel format may differ by camera models.

The relation among ADC bit depth, pixel format and pixel size is shown below.

Table 11-1 Description

ADC Bit Depth	Pixel Format	Pixel Size (Bits/Pixel)
8	Mono 8	8
12	Mono 8	8
	Mono 10	10
	Mono 12	12
16	Mono 8	8
	Mono 10	10
	Mono 12	12
	Mono 16	16
/	Bayer 10	10
	Bayer 12	12
	RGB 8	24

Click **Image Format Control** > **Pixel Format**, and set **Pixel Format** according to actual demands.

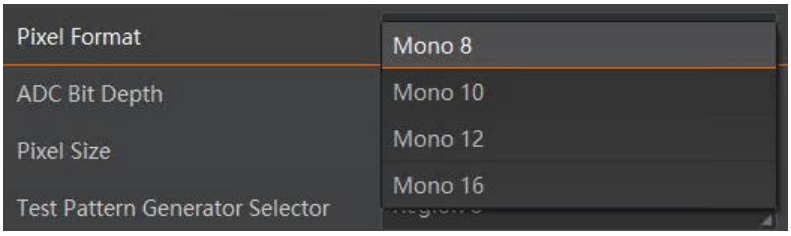

Figure 11-6 Set Pixel Format

11.6 Set Test Pattern

NOTE

The test pattern may differ by camera models.

The camera supports test pattern function. When there is exception in real-time image, you can check whether image of test mode have similar problem to determine the reason. This function is

disabled by default, and at this point, the outputted image by the camera is real-time image. If this function is enabled, the outputted image by the camera is test image.

Click **Image Format Control** > **Test Pattern**, and set **Test Pattern** according to actual demands

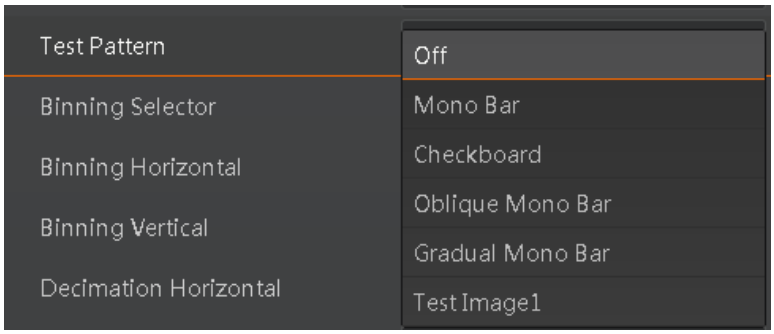

Figure 11-7 Set Test Pattern

The camera offers 6 test patterns, including **Mono Bar**, **Checkboard**, **Oblique Mono Bar**, **Gradual Mono Bar**, **Horizontal Color Bar** and **Test Image 1**.

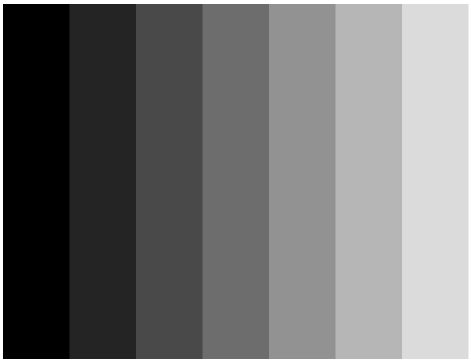

Figure 11-8 Mono Bar Test Pattern

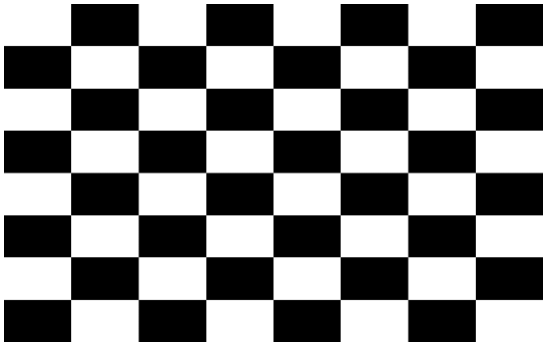

Figure 11-9 Checkboard Test Pattern

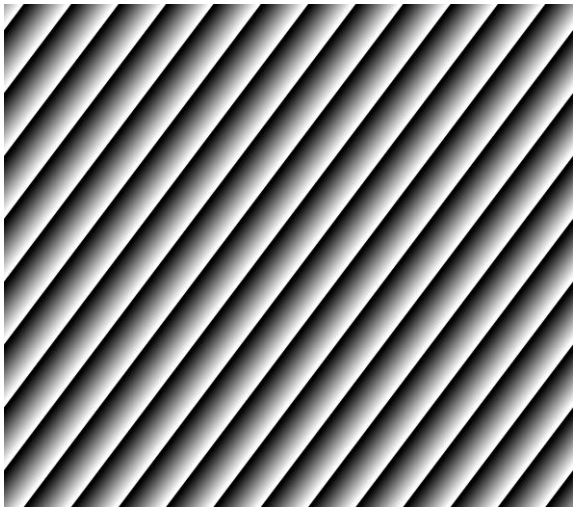

Figure 11-10 Oblique Mono Bar Test Pattern



Figure 11-11 Gradual Mono Bar Test Pattern

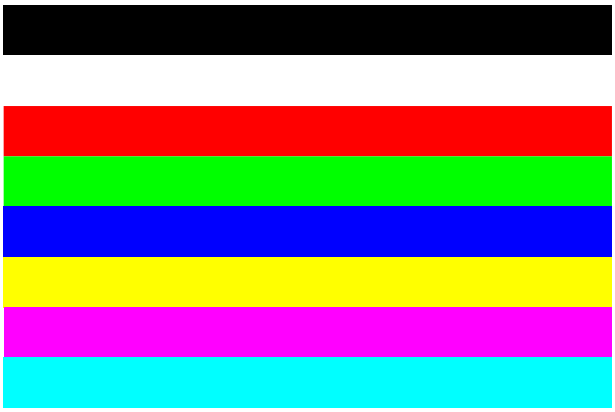

Figure 11-12 Horizontal Color Bar Test Pattern



Figure 11-13 Test Image 1 Test Pattern

NOTE

The pattern of the test image 1 may differ by camera models.

11.7 Set Binning

The purpose of setting binning is to enhance sensibility. With binning, multiple sensor pixels are combined as a single pixel to reduce resolution and improve image brightness.

Click **Image Format Control**, and set **Binning Horizontal** and **Binning Vertical** according to actual demands.



Figure 11-14 Set Binning

NOTE

- **Binning Horizontal** refers to the image's width, and **Binning Vertical** refers to the image's height.
- The binning function may differ by camera models.

11.8 Set Decimation

The decimation feature allows you to reduce the number of sensor pixel columns or rows that are transmitted by the camera. This procedure is also known as "subsampling". It reduces the amount of data to be transferred and may increase the camera's frame rate.

Click **Image Format Control**, and set **Decimation Horizontal** and **Decimation Vertical** according to actual demands.

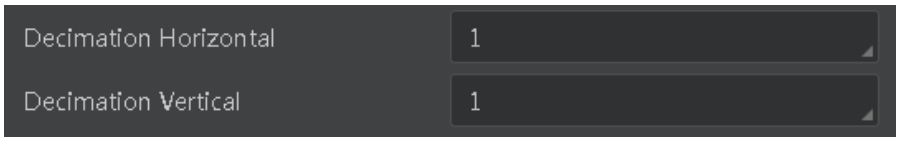

Figure 11-15 Set Decimation

NOTE

- **Decimation Horizontal** refers to the image's width, and **Decimation Vertical** refers to the image's height.
- The decimation function may differ by camera models.

11.9 Set Exposure Auto

Under the ultrashort exposure time mode, the camera exposes within an ultrashort time. The camera supports **Off** exposure mode only, you can adjust **Exposure Time** manually only.

Under the standard exposure time mode, the camera supports 3 types of exposure methods: **Off**, **Once** and **Continuous**.

Click **Acquisition Control** > **Exposure Auto**, and select **Exposure Auto** according to actual demands. The exposure method and principle are shown below.

Table 11-2 Exposure Method and Principle

Exposure Method	Principle
Off	The camera exposures according to the value configured by user in **Exposure Time**.
Once	Adjust the exposure time automatically according to the image brightness. After adjusting, it will switch to **Off** Mode.
Continuous	Adjust the exposure time continuously according to the image brightness.

When the **Exposure Auto** is set as **Off**, you can enter **Exposure Time** manually. When the **Exposure Auto** is set as **Once** or **Continuous**, the exposure time should be within the range of **Auto Exposure Time Lower Limit** and **Auto Exposure Time Upper Limit**.

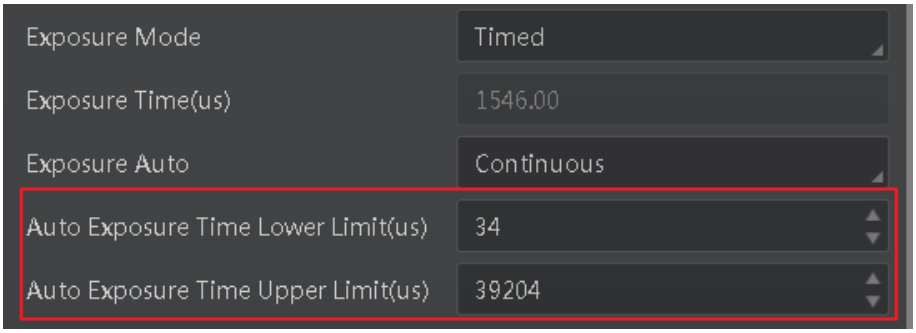

Figure 11-16 Set Exposure Time under Once or Continuous Mode

NOTE

If the camera is under **Continuous** exposure method, once external trigger mode is enabled, the camera will automatically switch to **Off** exposure mode.

11.10 Set HDR

NOTE

The HDR function may differ by camera models.

The camera supports HDR (High Dynamic Range) function that the camera acquires images based on 4 sets of settings, and each with its own exposure time and gain.

Click **Acquisition Control**, enable **HDR Enable**, select **0**, **1**, **2** or **3** as **HDR Selector**, and set corresponding **HDR Shutter** and **HDR Gain**.

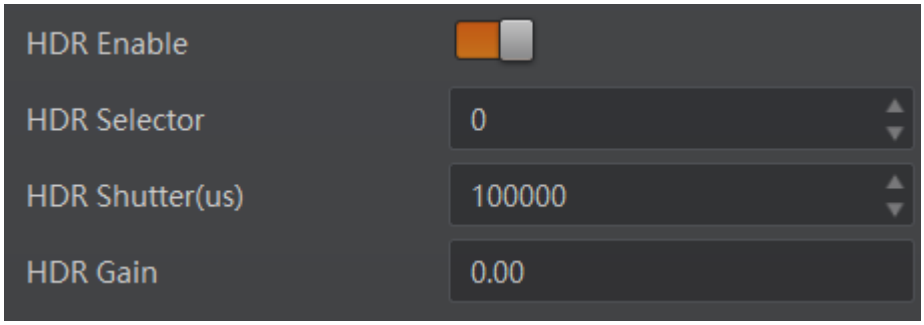

Figure 11-17 Set HDR

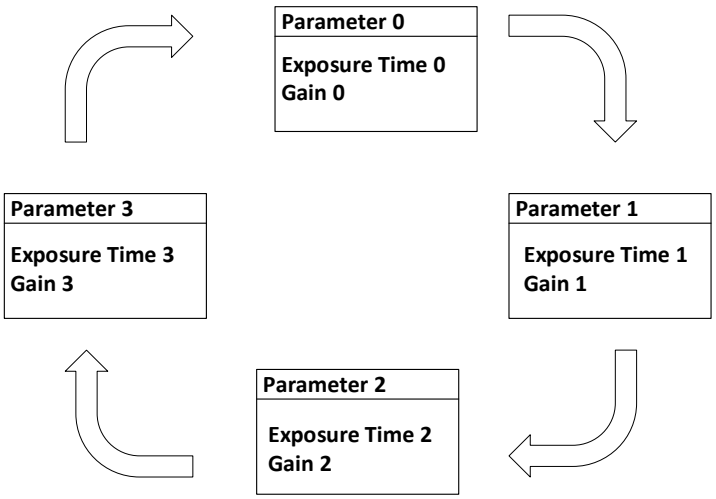

Figure 11-18 HDR Polling

11.11 Set Gain

NOTE

The gain function may differ by camera models.

The camera has 2 types of gain, including the analog gain and digital gain. The analog gain is applied before the signal from the camera sensor is converted into digital values, while digital gain is applied after the conversion.

11.11.1 Set Analog Gain

The camera supports 3 types of analog gain modes: **Off**, **Once** and **Continuous**. Click **Analog Control**, and select **Gain Auto** according to actual demands. The analog gain mode and principle are shown below.

Table 11-3 Analog Gain Mode and Principle

Gain Mode	Principle
Off	The camera adjusts gain according to the value configured by user in **Gain**.
Once	Adjust the gain automatically according to the image brightness. After adjusting, it will switch to **Off** Mode.
Continuous	Adjust the gain continuously according to the image brightness.

When the analog gain is set as **Once** or **Continuous**, the gain should be within the range of **Auto Gain Lower Limit** and **Auto Gain Upper Limit**.

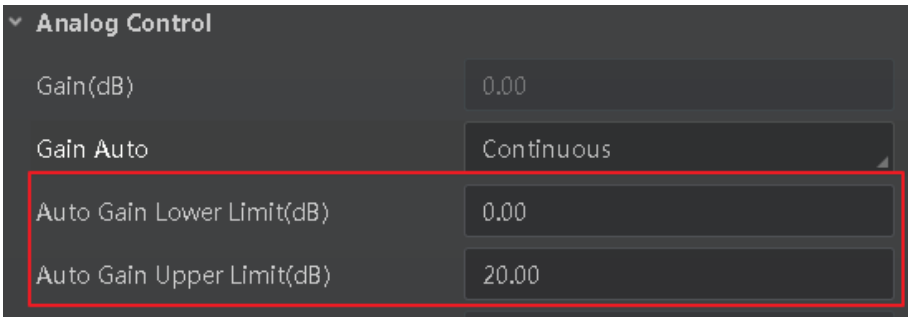

Figure 11-19 Set Gain under Once or Continuous Mode

NOTE

When increasing the analog gain, the image noise will increase too, which will influence image quality. If you want to increase image grayscale value, it is recommended to increase the camera's exposure time. If the exposure time reaches its upper limit, and at this point, you can increase analog gain.

11.11.2 Set Digital Gain

Apart from analog gain, the camera supports digital gain function. When analog gain reaching its upper limit and the image is still too dark, it is recommended to improve image brightness via digital gain.

Click **Analog Control**, enable **Digital Shift Enable**, and enter **Digital Shift** according to actual demands. The range of **Digital Shift** is from -6 to 6.

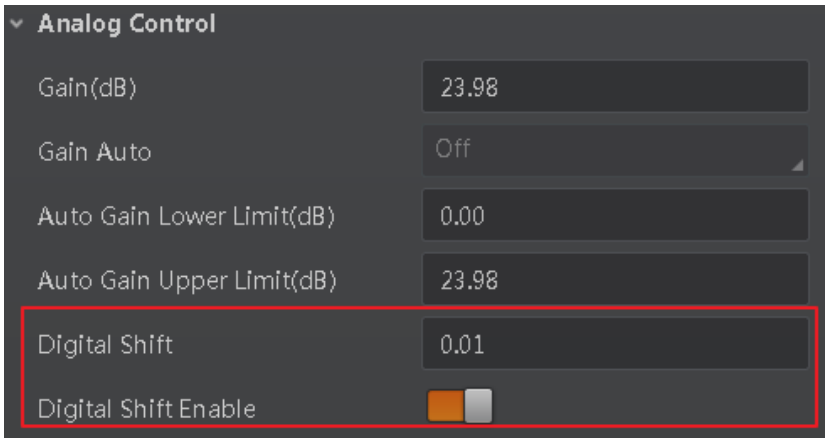

Figure 11-20 Set Digital Gain

11.12 Set Brightness

NOTE

The brightness function may differ by camera models.

The camera brightness refers to the brightness when the camera adjusts image under **Once** or **Continuous** exposure mode, or **Once** or **Continuous** gain mode. You can set brightness as shown below.

NOTE

You should enable **Once** or **Continuous** exposure mode, or **Once** or **Continuous** gain mode first before setting brightness.

Click **Analog Control** > **Brightness**, and set **Brightness** according to actual demand, and its range is from 0 to 255.

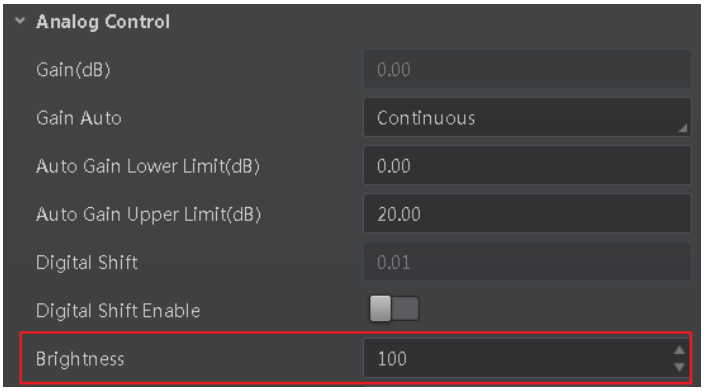

Figure 11-21 Set Brightness

NOTE

After setting brightness, the camera will automatically adjust exposure time to let image brightness reach target one. Under **Once** or **Continuous** exposure mode, or **Once** or **Continuous** gain, the higher the brightness value, the brighter the image will be.

11.13 Set Black Level

The camera supports black level function that allows you to change the overall brightness of an image by changing the gray values of the pixels by a specified amount.

Click **Analog Control** > **Black Level Enable**, enable **Black Level Enable**, and enter **Black Level** according to actual demands. The range of black level is from 0 to 65535.

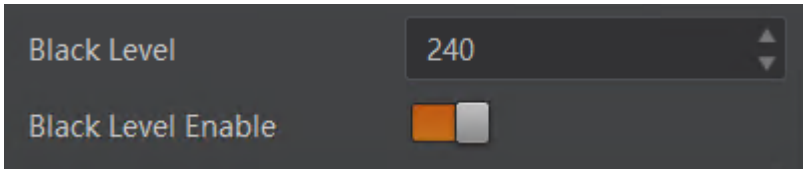

Figure 11-22 Set Black Level

NOTE

The black level range may differ by device models.

11.14 Set White Balance

NOTE

White balance is only available for color cameras.

The white balance refers to the camera color adjustment depending on different light sources. Adjust the Gain Value of the image's R channel and B channel to keep white regions white under different color temperatures. Ideally, the proportion of R channel, G channel and B channel in the white region is 1:1:1.

Click **Analog Control** > **Balance White Auto**, and select **Balance White Auto** according to actual demands.

Table 11-4 White Balance Status Description

White Balance Mode	Description
Off	You need to set the R, G, B value manually, between 1 and 4095. 1024 means ratio is 1.0
Once	Automatic white balance once. Adjust the white balance for a certain amount of time then stop. It implements an algorithm that finds possible gray areas in the Bayer data.
Continuous	Continuous automatic white balance. It implements an algorithm that finds possible gray areas in the Bayer data.

It is recommended to correct white balance when there is great difference between the camera's color effect and actual effect. You can correct white balance as shown below.

Steps:

1. Put a white paper in the range of the camera's field of view, and make sure the paper covers the entire field of view.
2. Set exposure and gain. It is recommended to set image brightness value between 120 and 160.
3. Select **Once** as **Balance White Auto**, and the camera will automatically adjust white balance for once.

If there is still great difference between correction effect and actual color, it is recommended to correct white balance according to following steps.

Steps:

1. Select **Off** as **Balance White Auto**. At this time, **Balance Ratio** is **1024**.
2. Find corresponding R/G/B channel in **Balance Ratio Selector**. Here we take **Green** as an example.
3. Find camera's R/G/B value.

4. Take **Green** as correction standard, and manually adjust other two channels (R channel and B channel) to let these three channels have same value.

NOTE

- Here we take **Green** as an example. For specific **Balance Ratio Selector** value, please refer to the actual condition.
- In order to avoid repeated correction after rebooting the camera, it is recommended to save white balance parameter to **User Set** after white balance correction. You can refer to the Section **Save and Load User Set** for details.
- If the light source and color temperature in environment change, you need to correct white balance again.

11.15 Set Gamma Correction

The camera supports Gamma correction function. Generally, the output of the camera's sensor is linear with the photons that are illuminated on the photosensitive surface of the sensor. Gamma correction provides a non-linear mapping mechanism as shown below.

- Gamma value between 0.5 and 1: image brightness increases, dark area becomes brighter.
- Gamma value between 1 and 4: image brightness decreases, dark area becomes darker.

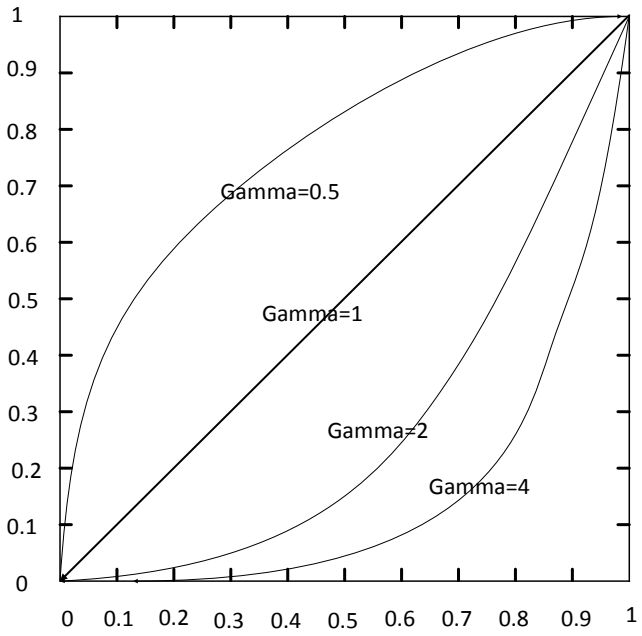

Figure 11-23 Gamma Curve

There are 2 types of Gamma correction, including **User** mode and **sRGB** mode. You can set User mode as shown below.

Steps:

1. Click **Analog Control** > **Gamma Selector**.
2. Select **User** as **Gamma Selector**.

3. Enable **Gamma Enable**.
4. Enter **Gamma** according to actual demands, and its range is from 0 to 4.

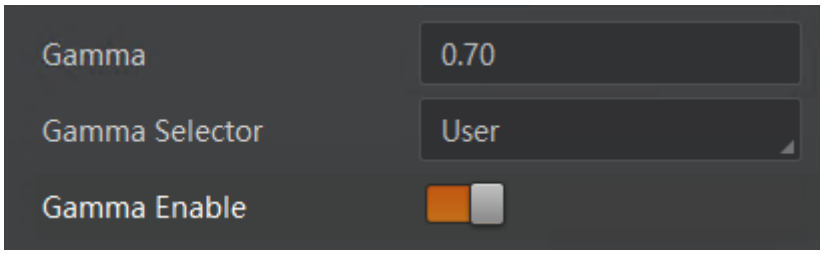

Figure 11-24 Set User Mode

You can set sRGB mode as shown below.

Steps:

1. Click **Analog Control** > **Gamma Selector**.
2. Select **sRGB** as **Gamma Selector**.
3. Enable **Gamma Enable**.

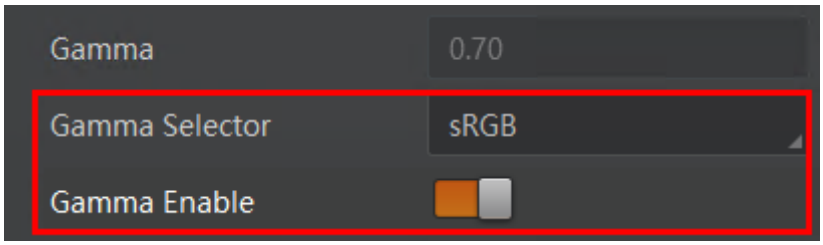

Figure 11-25 Set sRGB Mode

11.16 Set Sharpness

NOTE

The sharpness function is available when the camera is in Mono pixel format.

The camera supports sharpness function that can adjust the sharpness level of the image edge, and this function is disabled by default.

Click **Analog Control** > **Sharpness Enable**, enable **Sharpness Enable**, and enter **Sharpness** according to actual demands. The range of the brightness is from 0 to 100.

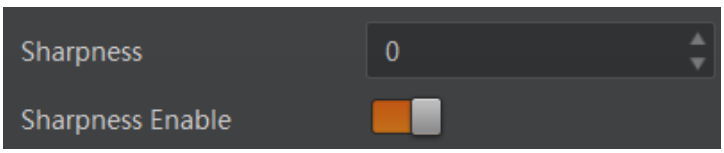

Figure 11-26 Set Sharpness

11.17 Set Channel Correct Mode

NOTE

The channel correction function may differ by camera models.

The channel correction function allows you to adjust the image's uniformity, and you can set channel correct mode as shown below.

Click **Analog Control** > **Channel Correct Mode**, and select **Channel Correct Mode** according to actual demands.

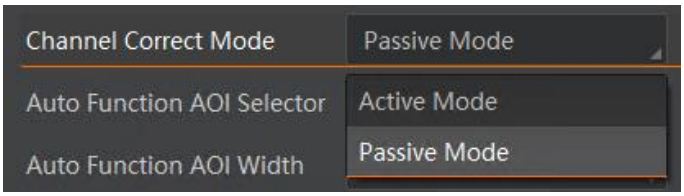

Figure 11-27 Set Channel Correct Mode

11.18 Set AOI

NOTE

The AOI function may differ by camera models.

The camera supports AOI function that can adjust the brightness and white balance of the entire image based on the area you selected.

Steps:

1. Click **Analog Control** > **Auto Function AOI Selector**, and select **AOI 1** or **AOI 2 Auto Function AOI Selector**.

2. Enter **Auto Function AOI Width**, **Auto Function AOI Height**, **Auto Function AOI Offset X**, and **Auto Function AOI Offset Y** according to actual demands.

3. Enable **Auto Function AOI Usage Intensity** if **AOI 1** is selected as **Auto Function AOI Selector**. Or enable **Auto Function AOI Usage White Balance** if **AOI 2** is selected as **Auto Function AOI Selector**.

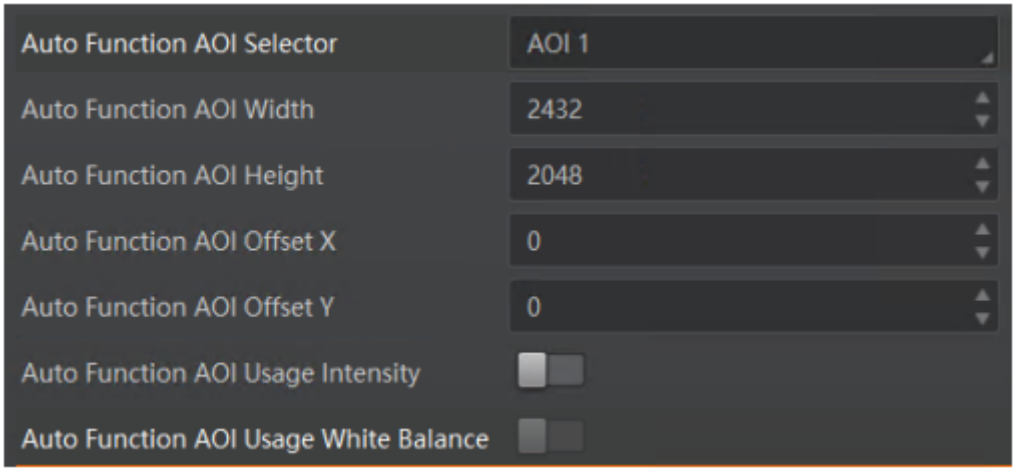

Figure 11-28 Set AOI

11.19 Set Hue and Saturation

NOTE

Hue and saturation are only available for color cameras.

- **Hue**

Adjusting the hue shifts the colors of the image.

Click **Analog Control**, enable **Hue Enable**, enter **Hue** according to actual demands, and its range is from 0 to 255.



Figure 11-29 Set Hue

- **Saturation**

Adjusting the saturation changes the colorfulness of the colors. A higher saturation, for example, makes colors easier to distinguish.

Click **Analog Control**, enable **Saturation Enable**, enter **Saturation** according to actual demands, and its range is from 0 to 255.

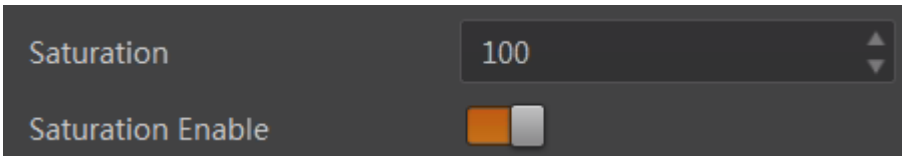

Figure 11-30 Set Saturation

11.20 Set LUT

A Look-Up Table (LUT) is a customized grayscale-mapping table. The LUT allows you to replace the pixel values in your images by values defined by you.

Steps:

1. Click **LUT Control**, and enable **LUT Enable**.
2. Enter **LUT Index** according to actual demands, and its range is from 0 to 1023.
3. Enter **LUT Value** according to actual demands, and its range is from 0 to 65535.

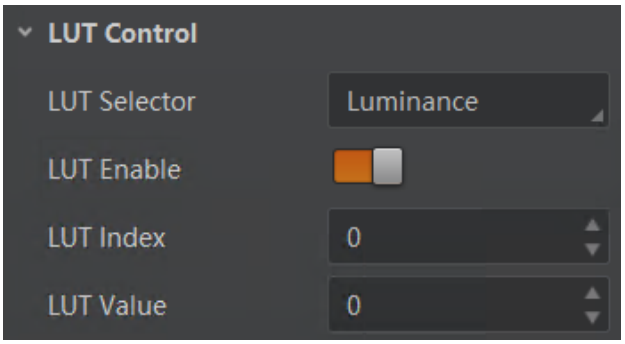

Figure 11-31 Set LUT

NOTE

- The **LUT Index** and **LUT Value** range may differ by device models.
- You cannot use Gamma correction function and LUT function at the same time.
- You cannot use the LUT function with the Bayer pixel format of color cameras.

11.21 Set Shading Correction

NOTE

The shading correction function may differ by camera models.

The camera supports shading correction function that improves the image uniformity when you acquire a non-uniformity image due to external conditions. The shading correction type includes NUFFC correction, FCC correction, and LSC correction.

- **NUFFC Correction**

NUFFC correction stands for Non-Uniformity Flat Field Correction that eliminates the non-uniform imaging brought by pixels.

Steps:

1. Click **Shading Correction**, and select **NUFFC Correction** as **Shading Selector**.

2. Click **Execute** in **Activate Shading**.
3. Enable **NUFFC Enable**.

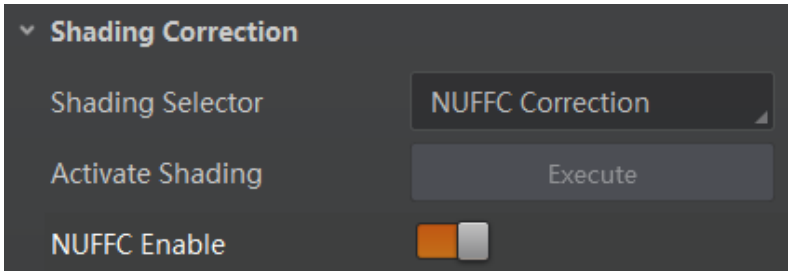

Figure 11-32 NUFFC Correction

- **FFC Correction**

FFC correction stands for Flat Field Correction that eliminates artifacts that are caused by variations in the pixel-to-pixel sensitivity of the detector or by distortions in the optical path.

Steps:

1. Click **Shading Correction**, and select **FFC Correction** as **Shading Selector**.
2. Click **Execute** in **Activate Shading**.
3. Enable **FFC Enable**.

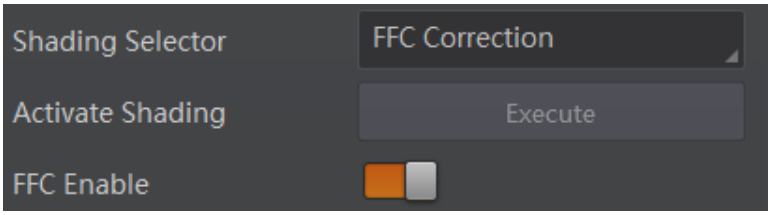

Figure 11-33 FFC Correction

- **LSC Correction**

LSC correction stands for Lens Shading Correction that eliminates non-uniform illumination brought by the lens.

NOTE

LSC correction can be done when only the camera is in full resolution.

Steps:

1. Click **Shading Correction**, and select **LSC Correction** as **Shading Selector**.
2. Click **Execute** in **Activate Shading**.
3. Enable **LSC Enable**.

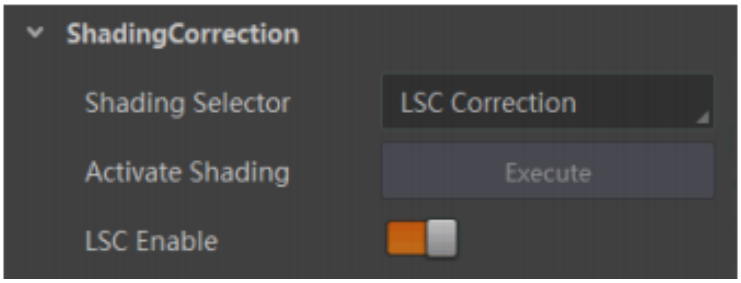

Figure 11-34 LSC Correction

Chapter 12 Other Functions

12.1 Device Control

NOTE

The specific device control parameters may differ by camera models.

In the **Device Control** attribute, you can view device information, edit device name, reset device, etc. The specific parameters in **Device Control** attribute are shown below.

Table 12-1 Device Control Parameter Description

Parameter	Read/Write	Description
Device Scan Type	Read only	It is the scan type of the sensor.
Device Vendor Name	Read only	It is the name of device manufacturer.
Device Model Name	Read only	It is the device model.
Manufacture Info	Read only	It is the manufacturer information.
Device Family Name	Read only	It is the device series name.
Device Version	Read only	It is the device version.
Device Firmware Version	Read only	It is the device firmware version.
Device Serial Number	Read only	It is the device serial number.
Device User ID	Read and write	Device name and it is empty by default. You can set according to your preference.
Maximum Device Response Time	Read only	It is device’s max. response time.
Device Manifest Table Address	Read only	It is the ID of GenICam XML that the device selects.
Device SBRM Address	Read only	It is the base address register.
Device Uptime(s)	Read only	It is the period of time when device is powered up.

Parameter	Read/Write	Description
Board Device Type	Read only	It is the device type.
Device Command Timeout	Read only	It counts the timeout of command.
Device Reset	Write only	Click Execute to reset the device.
Device Temperature Selector	Read and write	It selects device temperature, including sensor and mainboard.
Device Temperature	Read only	It displays the real-time temperature of the device you selected in Device Temperature Selector.
Device Clock Selector	Read and write	It selects device clock.
Device Clock Frequency	Read and write	It is device's pixel clock.
TEC Enable	Read and write	It enables TEC. TEC is able to keep the camera's sensor temperature around environment temperature to ensure the normal operation of the camera.
TEC Temperature	Read and write	It sets the TEC temperature.
TEC Fan Speed	Read and write	It sets the speed of TEC fan.

12.2 Transport Layer Control

NOTE

The specific transport layer control parameters may differ by camera models.

You can go to **Transport Layer Control** to view the camera's load size, tap geometry, GenCP version, etc. The specific parameters in **Transport Layer Control** and output order of different taps are shown below.

Table 12-2 Transport Layer Control Parameters Description

Parameter	Read/Write	Description
Paylode Size	Read only	It is the camera's load size.
Device Tap Geometry	Read and write	The value of camera sensor geometry in the frame grabber software should be the same with that of Device Tap Geometry. Inconsistent parameters may lead to image exception. You can select different tap numbers by clicking **Transport Layer Control** > **Device Tap Geometry**.
CI Configuration	Read only	It is the configuration mode. It switches automatically in accordance with different tap configuration mode. You can select different frame grabber configuration modes by clicking **Transport Layer Control** > **CI Configuration**.
GenCP Version Major	Read only	It is the major version in GenCP version.
GenCP Version Minor	Read only	It is the minor version in GenCP version.
Supported Baudrates	Read only	It displays the supported baud rates.

NOTE

For specific **Device Tap Geometry** that the camera supports, refer to the actual one you got. Here we take Geometry_1X_1Y, Geometry_1X_2YE and Geometry_1X2_2YE as an example.

When **Device Tap Geometry** is Geometry_1X_1Y, the output order of tap is shown below.



Figure 12-1 Geometry_1X_1Y

When **Device Tap Geometry** is Geometry_1X_2YE, the output order of tap is shown below.

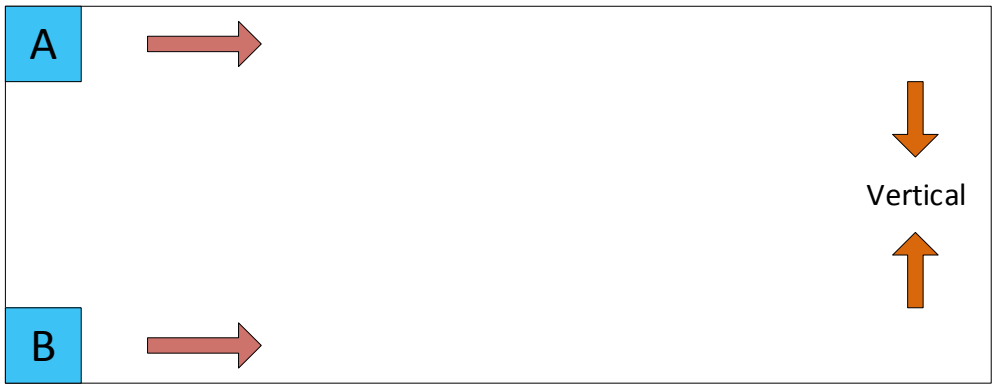

Figure 12-2 Geometry_1X_2YE

When **Device Tap Geometry** is Geometry_1X2_2YE, the output order of tap is shown below.

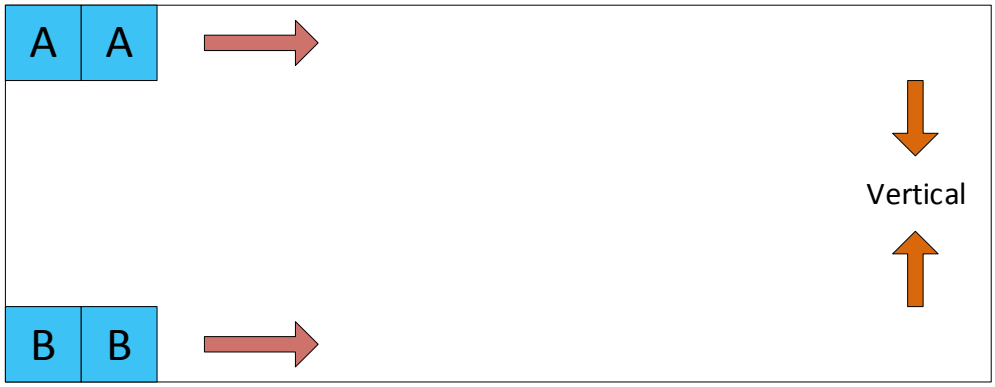

Figure 12-3 Geometry_1X2_2YE

12.3 Set Fan

NOTE

- The fan function may differ by camera models.
- The temperature unit here is Celsius degree.

For cameras with fan, you can go to **Analog Control** > **Fan Open Threshold** to set fan parameters.

When the camera's temperature is higher than the value you set in **Fan Open Threshold**, the fan starts to work. Otherwise, the fan stops working.

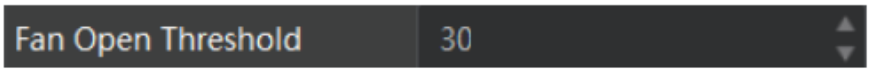

Figure 12-4 Set Fan

12.4 Save and Load User Set

The camera supports 4 sets of parameters, including 1 default set and 3 user sets. The relation among 4 sets of parameters is shown below.

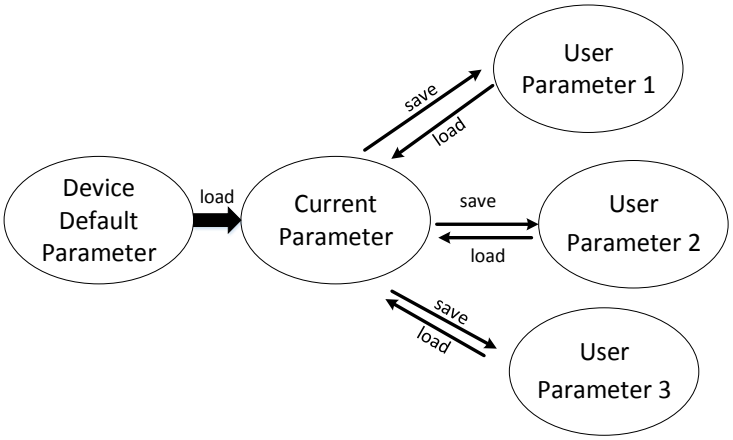

Figure 12-5 Parameter Relation

You can save parameters, load parameters and set user default as shown below.

- **Save Parameters**

Steps:

1. Click **User Set Control**, and select a user set in **User Set Selector**. Here we take selecting **User Set 1** as an example.
2. Click **Execute** in **User Set Save** to save parameters.

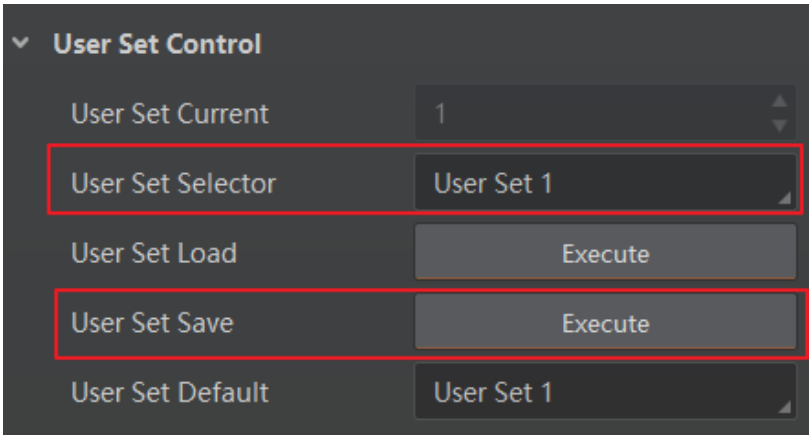

Figure 12-6 Save User Set

- **Load Parameters**

Steps:

1. Click **User Set Control**, and select a user set in **User Set Selector**. Here we take selecting **User Set 1** as an example.

2. Click **Execute** in **User Set Load** to load parameters to the camera, as shown below.

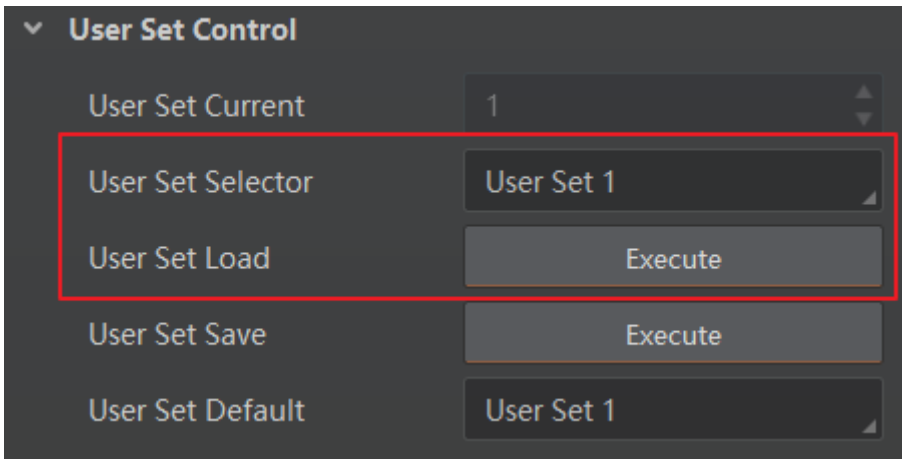

Figure 12-7 Load User Set

NOTE

Loading parameters is available when connecting with camera, but without acquisition.

- **Set User Default**

You can also set default parameter by selecting parameter from drop-down list of **User Set Default**, as shown below.

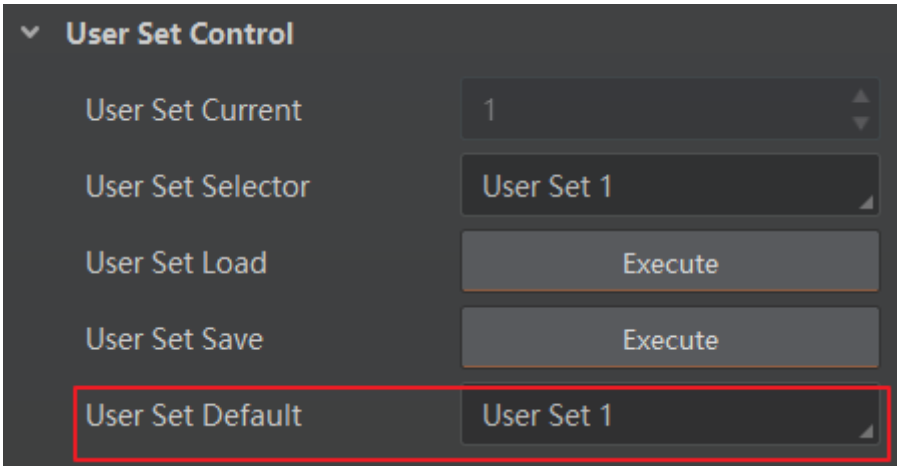

Figure 12-8 Set User Default

12.5 Update Firmware

The camera supports updating firmware by using Camera Link cable or USB data cable.

NOTE

- The method of updating firmware may differ by camera models.
- Make sure the power cable and others are properly connected before updating.

- Use the firmware package of the corresponding camera model for updating.

Update Firmware via Camera Link Cable

Steps:

1. Click **Tool > Firmware Updater** to open the update window.
2. Click in Camera Link to search the camera.
3. Click to select the camera you want to update.
4. Click to select the update file in the local computer.
5. Click **Update** to start updating.

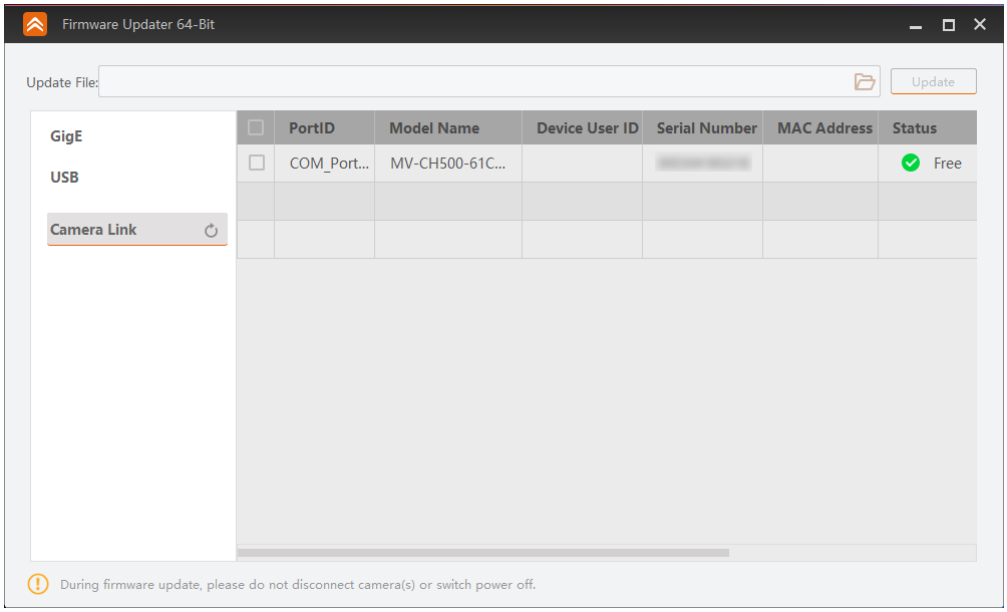

Figure 12-9 Update Firmware via Camera Link Cable

NOTE

- You can only update the firmware when the camera is free, and the camera will reboot automatically after updating the firmware.
- The firmware updating process may take a few minutes, please wait patiently.

Update Firmware via USB Data Cable

NOTE

- The USB data cable you use should have data transmission function. If the USB data cable cannot transmit data, the PC will not find the disk.
- Do not power off the camera during firmware updating.

Steps:

1. Power on the camera, and connect the camera to the PC via USB data cable.
2. Copy the dav file of the camera into the added disk.
3. Reboot the camera to update firmware.

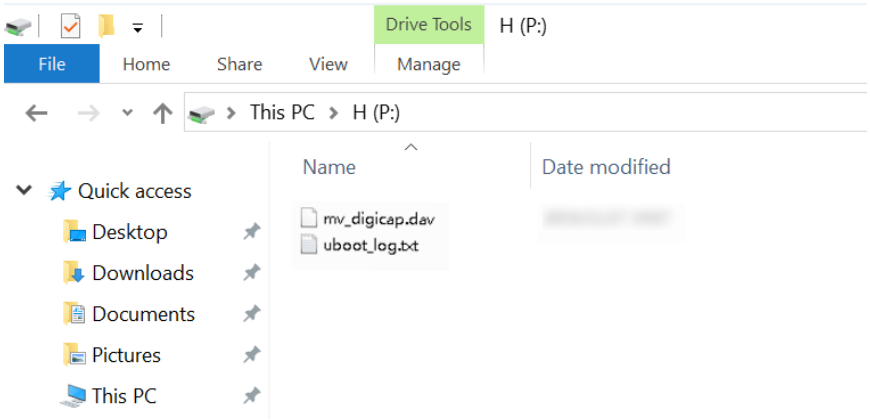

Figure 12-10 Update Firmware via USB Data Cable

Chapter 13 Trouble Shooting

Table 13-1 Trouble Shooting

No.	Trouble	Possible Reason	Solution
1	No camera found when running the MVS client software or frame grabber software.	The camera is not started up normally.	Check the camera's power supply by viewing the camera's LED indicator.
		Frame grabber exception occurs.	Check the frame grabber by viewing its indicator.
		Camera Link cable connection exception occurs.	Check whether Camera Link cable is properly connected by viewing frame grabber's indicator, or via serial port tool.
		Software installation exception occurs.	Check software version, or reinstall the frame grabber driver or software.
2	The camera's LED indicator shows solid blue, but frame grabber software cannot generate image.	Incorrect parameter settings of frame grabber software, for example resolution.	Check frame grabber parameter settings. If settings are not correct, please refer to Section Set Frame Grabber Software for details.
		The camera is in triggering mode.	Disable triggering mode.
3	Live view is black.	Aperture is closed, or camera exception occurs.	Open the aperture or reboot the camera.
4	The camera cannot acquire images under hardware trigger mode. Under other modes, the camera can acquire images.	Trigger mode is disabled.	Enable trigger mode.
		Trigger wiring is not correct.	Check whether external wiring is correct.

Chapter 14 Revision History

Table 14-1 Revision History

No.	Version No.	Document No.	Date	Revision Details
1	1.0.0	UD12979B	Jan. 9, 2019	Original version.
2	1.0.1	UD14755B	May 18, 2019	● Add different appearances of the camera. ● Delete acquisition mode. ● Add Section Set Channel Correct Mode. ● Add Section Set Shading Correction.
3	2.0.2	UD19483B	May 5, 2020	● Modify Section Appearance. ● Modify Section Client Software Settings. ● Add Section Sensor Shutter Mode. ● Modify Section Non-Overlap Exposure and Overlap Exposure. ● Add Section Set ADC Bit Depth. ● Add Section Set Decimation. ● Add Section Set HDR. ● Modify Section Set Shading Correction. ● Modify Section Update Firmware. ● Modify user manual structure.

Appendix A Camera Parameter Index

Table Appendix A-1 Camera Parameter Index

Attribute	Parameter	Section
Device Control	Device Scan Type	Section Device Control
	Device Vendor Name	
	Device Model Name	
	Manufacturer Info	
	Device Family Name	
	Device Version	
	Device Firmware Version	
	Device Serial Number	
	Device User ID	
	Maximum Device Response Time	
	Device Manifest Table Address	
	Device SBRM Address	
	Device Uptime (s)	
	Board Device Type	
	Device Command Timeout	
	Device Reset	
	Device Temperature Selector	
	Device Temperature	
	Device Clock Selector	
	Device Clock Frequency	
	TEC Enable	
	TEC Temperature	
	TEC Fan Speed	
Image Format Control	Width Max	Section View Resolution & Set ROI
	Height Max	

	Region Selector	
	Width	
	Height	
	Offset X	
	Offset Y	
	Reverse X	Section Set Image Reverse
	Reverse Y	
	ADC Bit Depth	Section Set ADC Bit Depth
	Pixel Format	Section Set Pixel Format
	Pixel Size	
	Test Pattern Generator Selector	Section Set Test Pattern
	Test Pattern	
	Binning Selector	Section Set Binning
	Binning Horizontal	
	Binning Vertical	
	Decimation Horizontal	Section Set Decimation
	Decimation Vertical	
Acquisition Control	Acquisition Burst Frame Count	Section Set Frame Rate
	Acquisition Frame Rate (Fps)	
	Acquisition Frame Rate Control Enable	
	Resulting Frame Rate (Fps)	
	Trigger Selector	Section External Trigger Mode
	Trigger Mode	
	Trigger Software	
	Trigger Source	
	Trigger Activation	
	Trigger Delay (μs)	

	Trigger Cache Enable	
	Sensor Shutter Mode	Section Sensor Shutter Mode
	Exposure Mode	Section Set Exposure Auto
	Exposure Time (μs)	
	Exposure Auto	
	Auto Exposure Time Lower Limit (μs)	
	Auto Exposure Time Upper Limit (μs)	
	HDR Enable	Section Set HDR
	HDR Selector	
	HDR Shutter (μs)	
	HDR Gain	
Analog Control	Gain	Section Set Analog Gain
	Gain Auto	
	Auto Gain Lower Limit	
	Auto Gain Upper Limit	
	Digital Shift	Section Set Digital Gain
	Digital Shift Enable	
	Brightness	Section Set Brightness
	Black Level	Section Set Black Level
	Black Level Enable	
	Balance White Auto	Section Set White Balance
	Balance Ratio Selector	
	Balance Ratio	
	Gamma	Section Set Gamma Correction
	Gamma Selector	
	Gamma Enable	
	Saturation	Section Set Hue and Saturation
	Saturation Enable	

	Hue	
	Hue Enable	
	Sharpness	Section Set Sharpness
	Sharpness Enable	
	Fan Open Threshold	Section Set Fan
	Auto Function AOI Selector	Section Set AOI
	Auto Function AOI Width	
	Auto Function AOI Height	
	Auto Function AOI Offset X	
	Auto Function AOI Offset Y	
	Auto Function AOI Usage Intensity	
	Auto Function AOI Usage White Balance	
LUT Control	LUT Selector	Section Set LUT
	LUT Enable	
	LUT Index	
	LUT Value	
Shading Correction	Shading Selector	Section Set Shading Correction
	Activate Shading	
	NUFFC Enable	
	FCC Enable	
	LSC Enable	
Digital IO Control	Line Selector	Section I/O Output
	Line Mode	
	Line Inverter	
	Line Status	
	Line Status All	
	Line Source	

	Strobe Enable	
	Line Debouncer Time (µs)	
	Strobe Line Duration (µs)	
	Strobe Line Delay (µs)	
	Strobe Line Pre Delay (µs)	
Counter And Timer Control	Counter Selector	Section Set Counter Trigger
	Counter Event Source	
	Counter Reset Source	
	Counter Reset	
	Counter Value	
	Counter Current Value	
Transport Layer Control	Payload Size	Section Transport Layer Control
	Device Tap Geometry	
	CI Configuration	
	GenCP Version Major	
	GenCP Version Minor	
	Supported Baudrates	
User Set Control	User Set Current	Section Save and Load User Set
	User Set Selector	
	User Set Load	
	User Set Save	
	User Set Default	

Appendix B Command List

NOTE

The commands listed in the command list below are common ones only. For other commands, contact the technical support personnel for detailed information.

Table Appendix B-1 Command List

Parameter	R/W	Command	Value
DeviceReset	W	w DeviceReset 1	--
TECEnable	R/W	w TEC_enable n r TEC_enable	0: Disable 1: Enable
TECTemperature	R/W	w TEC_tmp_set n r TEC_tmp_set	n= TEC Temperature × 100
TECFanSpeed	R/W	w TEC_speed_set n r TEC_speed_set	0 ~ 100
DeviceClockFrequency	R/W	w DeviceClockFrequency n r DeviceClockFrequency	0: 85M 1: 70M 2: 60M
Width	R/W	w Width n r Width	--
Height	R/W	w Height n r Height	--
OffsetX	R/W	w OffsetX n r OffsetX	--
OffsetY	R/W	w OffsetY n r OffsetY	--
ReverseX	R/W	w ReverseX n r ReverseX	0: Disable 1: Enable
ReverseY	R/W	w ReverseY n r ReverseY	0: Disable 1: Enable

PixelFormat	R/W	w PixelFormat n r PixelFormat	0x01080001: Mono8 0x01100003: Mono10 0x01100005: Mono12 0x02180014: RGB 8 0x01080009: BayerRG8 0x0110000d: BayerRG10 0x01100011: BayerRG12
TestPattern	R/W	w TestPattern n r TestPattern	0: off 11: MonoBar 12: HorizontalColorBar 13: Checkboard 14: ObliqueMonoBar 16: GradualMonoBar
Binning	R/W	w Binning n r Binning	bit31-bit16: BinningVertical bit15-bit0: BinningHorizontal
Decimation	R/W	w Decimation n r Decimation	bit31-bit16: DecimationVertical bit15-bit1: DecimationHorizontal
AcquisitionBurstFrameCount	R/W	w AcquisitionBurstFrameCount n r AcquisitionBurstFrameCount	1-1023
AcquisitionFrameRate	R/W	w AcquisitionFrameRate n r AcquisitionFrameRate	1000-1000000000, if AcquisitionFrameRateEnable is 1, you need to set Bit30 as 1.
TriggerMode	R/W	w TriggerMode n r TriggerMode	0: Off 1: On
TriggerSoftware	W	w TriggerSoftware 1	--

TriggerSource	R/W	w TriggerSource+6 n r TriggerSource+6	0: line0 1: line1 2: line2 4: Counter0 7: Software 9: CC1 11: CC2 12: CC3 13: CC4
TriggerActivation	R/W	w TriggerActivation+6 n r TriggerActivation+6	0: RisingEdge 1: FallingEdge
TriggerDelayAbsVal	R/W	w TriggerDelayAbsVal+6 n r TriggerDelayAbsVal+6	0-16000000
TriggerCacheEnable	R/W	w TriggerCacheEnable n r TriggerCacheEnable	0: Disable 1: Enable
ExposureTime	R/W	w ExposureTime n r ExposureTime	--
ExposureAuto	R/W	w ExposureAuto n r ExposureAuto	0: off 1: once 2: continues
GainAbsVal	R/W	w GainAbsVal n r GainAbsVal	n = Gain / 0.0359 + 64
GainCtrl	R/W	w GainCtrl n r GainCtrl	0: off 1: once 2: continues
BlackLevel	R/W	w BlackLevel n r BlackLevel	0 - 4095
BlackLevelCtrl	R/W	w BlackLevelCtrl n r BlackLevelCtrl	0: Disable 1: Enable
BalanceWhiteAuto	R/W	w BalanceWhiteAuto r BalanceWhiteAuto	0: off 1: continues 2: once
BalanceRatio	R/W	w BalanceRatio+n1 n2 r BalanceRatio	n1: 0: Red 1: Green 2: Blue n2: 1 - 4095

GammaAbsVal	R/W	w GammaAbsVal n r GammaAbsVal	n = GammaAbsVal x 100 + n1 n1: 0x10000: User 0x20000: sRGB
GammaCtrl	R/W	w GammaCtrl n r GammaCtrl	0: Disable 1: Enable
SharpnessVal	R/W	w SharpnessVal n r SharpnessVal	0 - 100
SharpnessCtrl	R/W	w SharpnessCtrl n r SharpnessCtrl	0: Disable 0x10000: Enable
SaturationAbsVal	R/W	w SaturationAbsVal n r SaturationAbsVal	0-255
SaturationCtrl	R/W	w SaturationCtrl n r SaturationCtrl	0: Disable 0 x 10000: Enable
FanOpenThreshold	NA	w FanOpenThreshold n r FanOpenThreshold	0 - 100
LineMode	R/W	w LineMode+n1 n2 r LineMode+n1	n1: 0: set LineSelector to line0 1: set LineSelector to line1 2: set LineSelector to line2 5: set LineSelector to CC1 6: set LineSelector to CC2 7: set LineSelector to CC3 8: set LineSelector to CC4 n2: 0: input 8: strobe
LineInverter	R/W	w LineInverter n r LineInverter	0: Disable 1: Enable
LineSource	R/W	w LineSource 0 r LineSource	0: ExposureActive

LineStrobe	R/W	w LineStrobe n r LineStrobe	0: Disable bit1: line1 Enable bit2: line2 Enable bit4: line4 Enable
LineDebouncerTime	R/W	w LineDebouncerTime+n1 n2 r LineDebouncerTime+n1	n1: 0: set LineSelector to line0 1: set LineSelector to line1 2: set LineSelector to line2 5: set LineSelector to CC1 6: set LineSelector to CC2 7: set LineSelector to CC3 8: set LineSelector to CC4 n2: 0 - 1000000
StrobeLineDuration	R/W	w StrobeLineDuration+n1 n2 r StrobeLineDuration+n1	n1: 0: set LineSelector to line0 1: set LineSelector to line1 2: set LineSelector to line2 5: set LineSelector to CC1 6: set LineSelector to CC2 7: set LineSelector to CC3 8: set LineSelector to CC4 n2: 0 - 2000000

StrobeLineDelay	R/W	w StrobeLineDelay+n1 n2 r StrobeLineDelay+n1	n1: 0: set LineSelector to line0 1: set LineSelector to line1 2: set LineSelector to line2 5: set LineSelector to CC1 6: set LineSelector to CC2 7: set LineSelector to CC3 8: set LineSelector to CC4 n2: 0 - 10000
StrobeLinePreDelay	R/W	w StrobeLinePreDelay n r StrobeLinePreDelay	0 - 5000
DeviceTapGeometry	R/W	w DeviceTapGeometry n r DeviceTapGeometry	0x01010101: Geometry_1X_1Y 0x01020101: Geometry_1X2_1Y 0x01020102: Geometry_1X2_1Y2 0x0a0b0c0d: Geometry_aXb_cYd
ClConfiguration	R	r ClConfiguration	0: base 1: medium 2: full 4: EightyBit
UserSetSelector	R/W	w UserSetSelector n r UserSetSelector	0: default 1: userset1 2: userset2 3: userset3
UserSetLoad	W	w UserSetLoad 1	--
UserSetSave	W	w UserSetSave 1	--

UserSetDefaultSelector	R/W	w UserSetDefaultSelector n r UserSetDefaultSelector	0: default 1: userset1 2: userset2 3: userset3


See Far, Go Further