EN - For pricing and availability in your local country please visit one of the below links:

DE - Informationen zu Preisen und Verfügbarkeit in Ihrem Land erhalten Sie über die unten aufgeführten Links:

FR - Pour connaître les tarifs et la disponibilité dans votre pays, cliquez sur l'un des liens suivants:

9116 9115 9115-AT 9117

EN
This Datasheet is presented by the manufacturer

DE
Dieses Datenblatt wird vom Hersteller bereitgestellt

FR
Cette fiche technique est présentée par le fabricant

Data Sheet

Multi-Range Programmable DC Power Supplies

9115 Series



1200 W / 3000 W Multi-Range DC Power Supplies

Any 9115 Series model can replace several supplies on your bench or in your rack. Unlike conventional supplies with fixed output ratings, these multi-range power supplies automatically recalculate voltage and current limits for each setting, providing full output power in any Volt/Amp combination within the rated voltage and current limits.

For benchtop applications, this series provides a numerical keypad for direct data entry along with convenient cursors and analog style knobs to quickly make incremental voltage or current changes. System integrators benefit from the standard USB (USBTMC-compliant), RS-232, GPIB, RS-485, and LAN (9117 only) interfaces supporting SCPI commands. Alternatively, users can control the power supply, execute test sequences or log measurements using the provided PC software application. This software also integrates with Data Dashboard for LabVIEW apps enabling iOS, Android or Windows 8 compatible tablets or smart phones to remotely monitor select measurement indicators.

The 9115-AT provides automotive power test waveforms compliant to DIN 40839 and ISO 16750-2 standards that can simulate common test conditions for electrical and electronic devices installed in automobiles.

Multi-Range Operation

The multi-ranging feature of the 9115 Series offers exceptional flexibility by providing any combination of the rated voltage and current up to the maximum output power of the supply. These wide ranges of voltage and current allow users to replace multiple supplies on a bench or system rack.

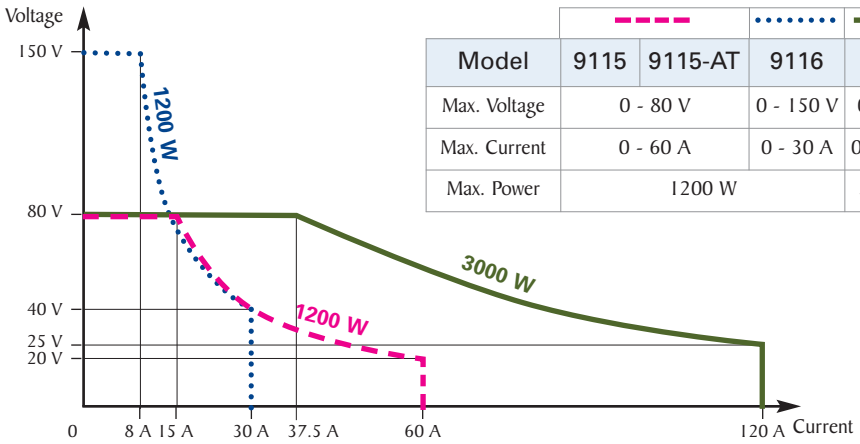

Model	9115	9115-AT	9116	9117
Max. Voltage	0 - 80 V		0 - 150 V	0 - 80 V
Max. Current	0 - 60 A		0 - 30 A	0 - 120 A
Max. Power	1200 W			3000 W

Features & Benefits

- Multi-ranging operation (output up to max power rating within maximum voltage and current rating)
- Compact, high density, 1U rackmount form factor (2U for 9117)
- High programming and readback resolution
- Adjustable voltage slope (rise and fall time)
- Sequence programming (internal list mode for models 9115, 9115-AT, and 9116)
- Save and recall up to 100 instrument settings
- Standard USB (USBTMC-compliant), RS-232, GPIB, RS-485, and LAN (9117 only) interfaces supporting SCPI commands for remote control
- Analog interface with control and monitoring functions
- Master/Slave mode for parallel and series operation
- Remote sense
- Overvoltage/overpower/overtemperature protection, and key-lock function
- Test functions compliant to automotive standards (9115-AT only)
- Softpanel for remote control, test sequence generation and data logging

Technical data subject to change
© B&K Precision Corp. 2015

B&K PRECISION
ELECTRONIC TEST INSTRUMENTS

Front panel

Models 9115 / 9115-AT / 9116

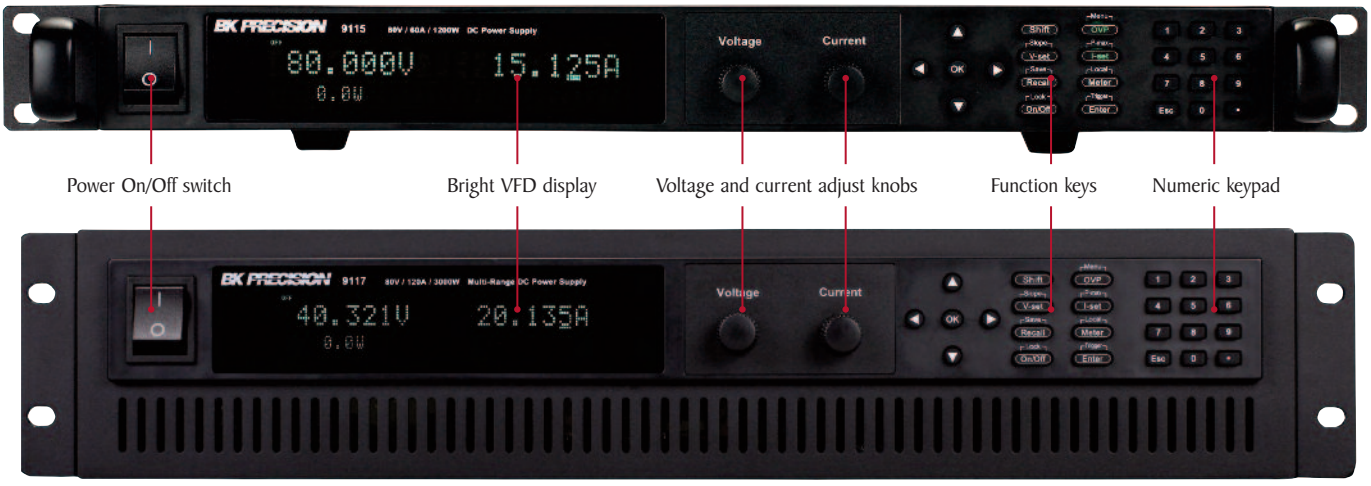

Model 9117

Rear panel

Models 9115 / 9115-AT / 9116

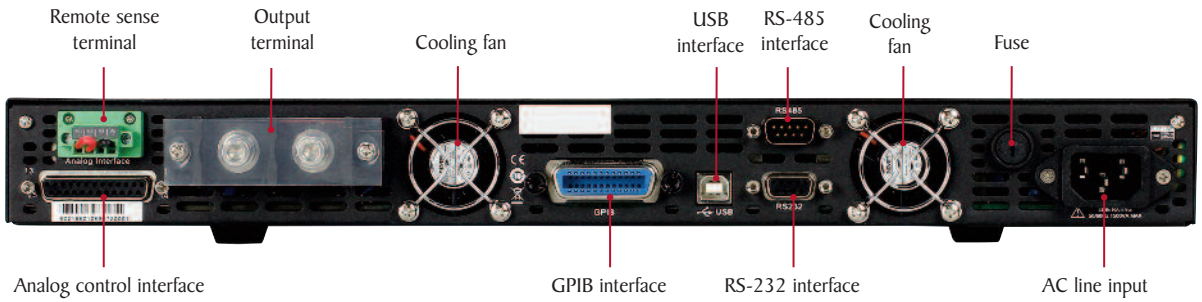

Model 9117

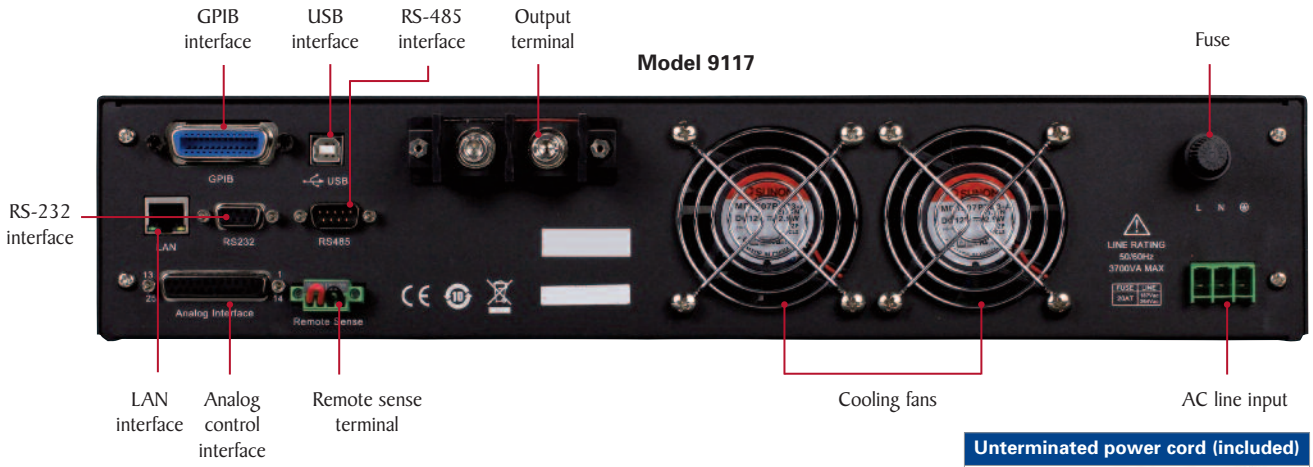

Unterminated power cord (included)

Model 9117 only



Flexible operation

Easy-to-use interface

The numeric keypad, rotary knobs, and cursors provide an easy way to set output levels quickly and precisely. With a push of a button, the display can be conveniently toggled between set and measured voltage and current values. Additionally, the power supplies provide internal memory for storage of up to 100 different instrument settings that can be set and recalled via both the front panel and remote interfaces.

Test sequence execution in list mode (models 9115, 9115-AT, and 9116 only)

The list mode feature lets users store, recall, and run program sequences in the power supply's internal memory. A total of 10 steps can be configured for each sequence (up to 10). These sequences can then be saved into a program configuration that can run one sequence after another, which allows for a maximum of 100 steps in one program configuration.

Programmable voltage rise/fall times

The power supply is capable of programming the slope of the output voltage during changes between voltage settings by allowing users to set the rising and falling edge times of the voltage.

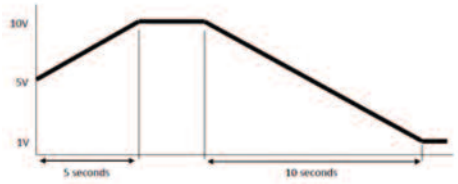

External analog control interface

The power supply output voltage and current can be controlled from zero to full range by either external DC voltage sources (0-5 V or 0-10 V) or resistances (0-5 kΩ or 0-10 kΩ). The DB25 analog control interface also provides a source for monitoring the voltage and current output.

Master/Slave operation

More than one unit of the same power supply model can be connected in parallel or series connection to increase the overall current or voltage output respectively. Using the RS-485 interface, the power supplies can operate in master/slave mode. In this mode, the master unit can control all other power supplies connected in parallel or series. Additionally, the RS-485 interface can be used for multi-unit control of up to 31 daisy chained units.

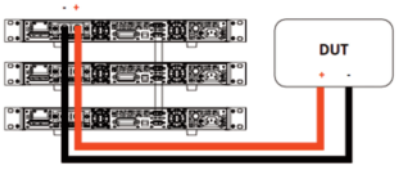

Parallel Configuration

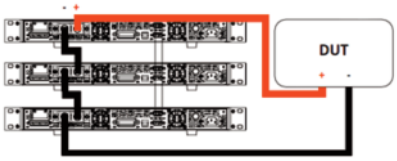

Series Configuration

Application software

PC software is provided for front panel emulation, generating and executing test sequences or logging measurement data without the need to write source code. Additionally, this application software integrates with NI Data Dashboard for LabVIEW apps which allows users to create a custom dashboard on a tablet computer or smart phone to remotely monitor 9115 Series power supplies via this PC software.

- Remote monitoring on iOS, Android or Windows 8 compatible tablets or smart phones via NI Data Dashboard for LabVIEW apps. Quickly develop a custom dashboard consisting of one (smart phone) or several (tablet) indicators, charts or gauges to monitor your power supply.
- Log voltage, current and power values as well as time stamp, CV/CC and output status.
- Save and load list files to/from the power supply's internal memory.
- Create an unlimited number of external list files to be executed from PC memory. Save and recall list files to/from the PC.



Model 9115-AT Automotive Test Functions

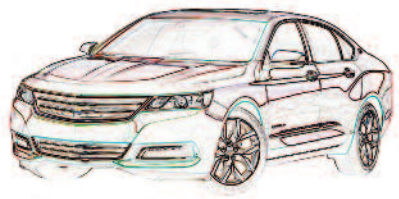

In order to ensure electronic systems used in a vehicle are able to function in an automotive environment, automotive component manufacturers test electronic modules to industry standards. The 9115-AT provides built-in simulations compliant to these automotive test standards to help automate and speed up development time.

DIN 40839 (ISO 7637)

This standard insures EMC (electromagnetic compatibility) in road vehicles by injection of supply line transients. The 9115-AT can output a 12 V or 24 V system voltage sequence, which simulates the behavior in supply voltage reduction caused by an engine starter motor circuits (Fig. 1).

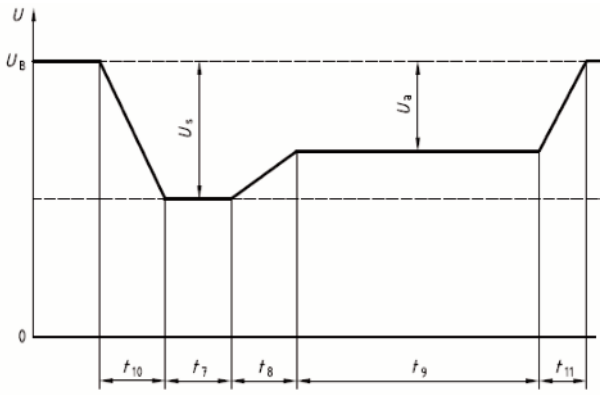

Fig. 1 - Motor startup curve

ISO 16750-2

This standard applies to electric and electronic systems/components for vehicles. It describes the potential environmental conditions and specifies tests and requirements recommended for the specific mounting location on/in the vehicle. These test simulations include measurement of discontinuities in supply voltage, voltage drops, tests applicable to equipment with reset functions, and tests to insure modules do not malfunction during an engine start routine with cranking.

Simulate the effect when a conventional fuse element melts in another circuit.

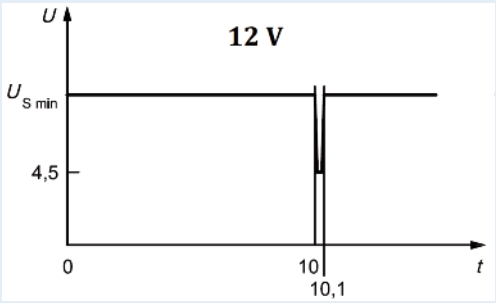

Fig. 2 - Short voltage drop test

Verify the reset behavior of your DUT at various voltage drops.

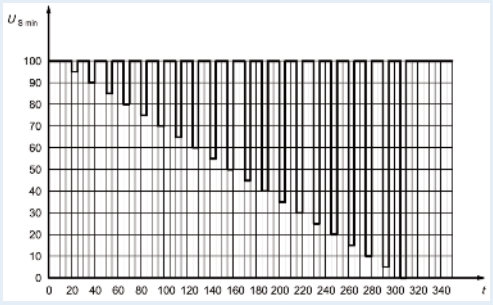

Fig. 3 - Reset behavior voltage drop test

Verify the behavior of a DUT during and after cranking.

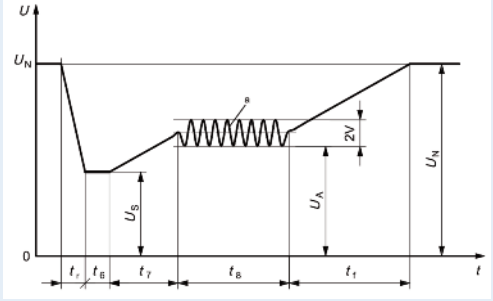

Fig. 4 - Starting profile test

Specifications

Model	9115 & 9115-AT	9116	9117
Output Rating			
Voltage	0 – 80 V	0 – 150 V	0 – 80 V
Current	0 – 60 A	0 – 30 A	0 – 120 A
Max Output Power	1200 W		3000 W
Load Regulation[1][2]			
Voltage	0.01 % + 5 mV	0.05 % + 30 mV	
Current	0.1 % + 10 mA	0.1 % + 30 mA	
Line Regulation[2]			
Voltage	0.02 % + 1 mV	0.02 % + 20 mV	
Current	0.02 % + 1 mA	0.02 % + 10 mA	
Programming/Readback Resolution			
Voltage	1 mV	3 mV	2 mV
Current	1 mA		3 mA
Programming/Readback Accuracy[2]			
Voltage	0.02 % + 30 mV	0.05 % + 30 mV	
Current	0.1 % + 60 mA	0.2 % + 30 mA	0.2% + 120 mA
Ripple (20 Hz – 20 MHz)			
Voltage	≤ 60 mVpp		≤ 80 mVpp
Current	100 mArms	40 mArms	120 mArms
Temperature Coefficient (0 °C – 40 °C)[2]			
Voltage	0.02 % + 30 mV		
Current	0.05 % + 10 mA		
Readback Temperature Coefficient (0 °C – 40 °C)[2]			
Voltage	0.02 % + 30 mV		
Current	0.05 % + 5 mA		
General			
Efficiency	73% (120 VAC) 75% (220 VAC)	75% (120 VAC) 80% (220 VAC)	80% (220 VAC)
Power Factor (full load)	0.99	0.99	0.99
Standard Interface	USB, GPIB, RS-232, RS-485		USB, GPIB, RS-232, RS-485, Ethernet
AC Input	115/230 VAC ± 10 %, 47 Hz – 63 Hz		220 VAC ± 10 %, 47 Hz – 63 Hz
Input Current (nominal)	13.8 A (120 VAC) 7.3 A (220 VAC)	13.3 A (120 VAC) 6.9 A (220 VAC)	17.1 A (220 VAC)
Operating Temperature	32 ° F – 104 ° F (0 °C – 40 °C)		
Storage Temperature	-4 ° F – 158 ° F (-20 °C – 70 °C)		
Safety	EN61010-1:2001, EU Low Voltage Directive 2006/95/EC		
Electromagnetic Compatibility	Meets EMC Directive 2004/108/EC, EN 61000-3-2:2006, EN 61000-3-3:1995+A1:2001+A2:2005 EN 61000-4-2/-3/-4/-5/-6/-11, EN 61326-1:2006		
Dimensions (W x H x D)	16.32" x 1.75" x 19.02" (414.5 x 44.5 x 483.2 mm)		17.19" x 3.52" x 20.95" (436.5 x 89.3 x 532 mm)
Weight	18.74 lbs (8.5 kg)		37.48 lbs (17 kg)
			One-Year Warranty
Included Accessories	User manual, AC power cord (9115, 9115-AT, and 9116 only), unterminated AC power cord with input connector (9117 only), certificate of calibration and test report		

[1] With remote sense connected
[2] Accuracy specified as ±(% of output + offset) after a temperature stabilization time of 15 minutes over an ambient temperature range of 23 °C ±5 °C

EN - For pricing and availability in your local country please visit one of the below links:

DE - Informationen zu Preisen und Verfügbarkeit in Ihrem Land erhalten Sie über die unten aufgeführten Links:

FR - Pour connaître les tarifs et la disponibilité dans votre pays, cliquez sur l'un des liens suivants:

9116 9115 9115-AT 9117

EN
This Datasheet is presented by the manufacturer

DE
Dieses Datenblatt wird vom Hersteller bereitgestellt

FR
Cette fiche technique est présentée par le fabricant