MAXI-POWER™ 8XR

The NEW **Maxi-Power 8XR**, is an Allmand® compact workhorse single-phase towable generator providing up to 8kW of prime power. The small rugged design is durable for job site and event applications, such as powering work sheds or small equipment. Whether it is providing power for building on the construction site or for a concert event the Maxi-Power 8XR gets the job done.



KEY FEATURES

Maxi-Power 8XR

8 kW / 8 kVA Single-Phase Towable Generator

Deep Sea Controller with on screen fuel gauge, low fuel shutdown, scheduling, and auto-start

45 Gallon (170 liter) Fuel Tank for extended runtime

Emergency Stop

VIN Package Stop, turn, tail lights / side marker lights / illuminated license plate bracket

Lift Ring

Standard Outlet Package (1) 20A GFCI, (1) 30A Twist Lock, (1) 30A RV



All Steel Construction with durable powder coat finish

2" Ball Coupler

Foldable Tongue Takes up less space on the job site and in the rental yard

Removable Tongue

110% Fluid Containment System of all on-board fluids

Tubular Axle with elliptical leaf springs

Tires ST175 / 80R13 load range 'C'

Forklift Pockets below the frame

TECHNICAL SPECS

Model Number	MP 8XR
Engine Make / Model	Kubota D1105
Engine - Generator Control Interface	Deep Sea L401
Mechanical Output (Continuous Hp)* **	13.6
Prime Power kVA (kw)*	8 (8)
Maximum Ambient Operating Temperature @ Full Output	120 °F (49 °C)
Run Time @ Full Load (hr)** (Will Require Final Testing)	57*
Sound Level @ 23ft - Full Load- dBA (Will Require Final Testing)	65.8*
Sound Level @ 23ft - No Load- dBA (Will Require Final Testing)	65.4*
Engine Oil Capacity - qt (L)	5.4 (5.1)
Alternator	Linz AVR
Insulation Class	Class H
Battery (V)	12
Oil Change Interval (hr)	1000
Weights	
Gross Vehicle Weight Ratings - GVWR - lbs (kg)	2,200 (997.9)
Shipping Weight - lbs (kg)	1,885 (855)
Number of Units on 48' Flatbed	18 units
Number of Units on 53' Flatbed	20 units

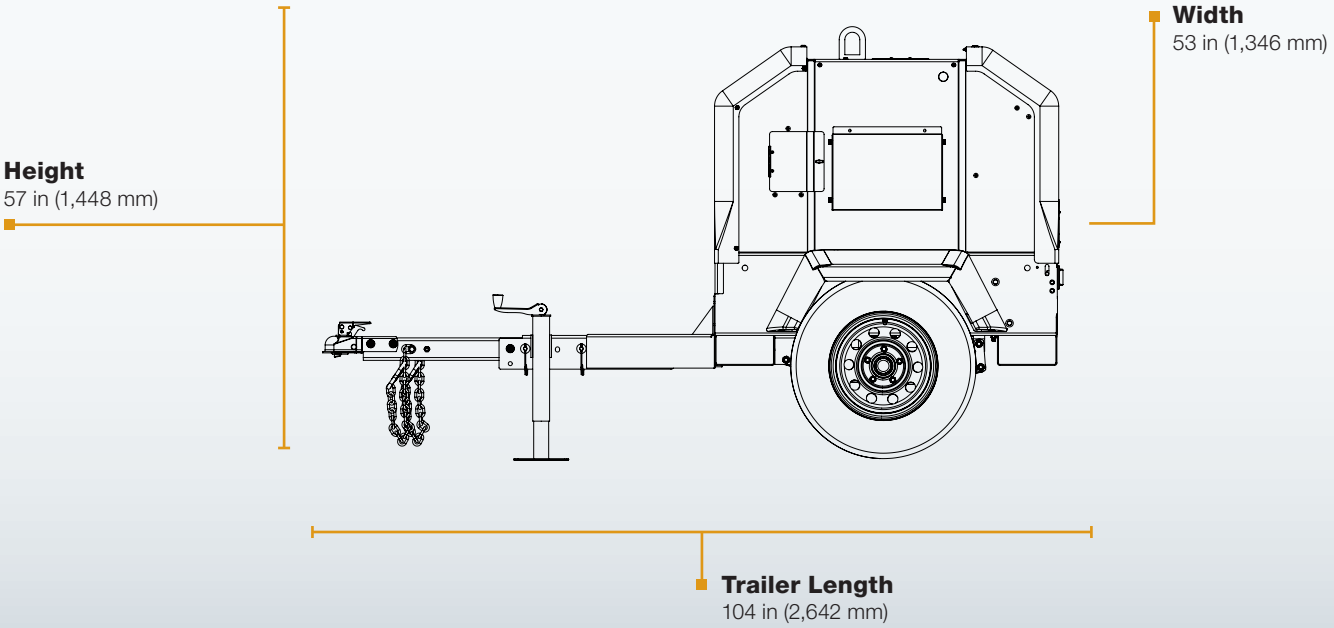

* Prime generator electrical output per Allmand® testing. ** Based on one hour run test full fuel tank consumption. *** All power levels are stated gross horsepower as rated by the engines manufacturers

Allmand has a policy of continuous product improvement and reserves the right to modify its specifications at any time and without prior notice. See operator's manual or www.allmand.com website for complete warranty details.

OPTIONS

Maxi-Power 8XR

Cold Weather Package
- Heavy-duty battery 775 CCA @ 0°F (-17.7°C)
- Block heater (120 VAC)

CSA Pending (Canada only)

Telematics Package
(Customer supplied – consult factory)

Emergency Engine Air Shut-off Valve

Lockable Battery Disconnect

2" Bulldog coupler with 3" lunette ring for pintle hitch

2" ball coupler with 3" lunette ring for pintle hitch

Custom Paint



COMPROMISE NOTHING.

At Allmand, our sole focus is providing jobsite support equipment to help your customers get the job done. Whenever they need it. Wherever they are. And whatever it takes. What's more, our genuine commitment to you — the highest standard of service and lowest total cost of ownership — is simply unmatched. Choose the equipment that comes with complete confidence that jobsite productivity won't go dark at 2 a.m. **Allmand. Above All.**

Allmand®

BRIGGS & STRATTON
Milwaukee, WI 53201-0702 USA
(414) 259-5333
Copyright ©2023. All rights reserved.