UBIQUITI®
NETWORKS

# EdgeSwitch™ 16 150W

## Managed PoE+ Gigabit Switch with SFP

Model: ES-16-150W

# Quick Start Guide

www.4Gon.co.uk info@4gon.co.uk Tel: (0)0330 088 0295 Fax: +44 (0)1245 808299

# Introduction

Thank you for purchasing the Ubiquiti Networks® EdgeSwitch™. This Quick Start Guide is designed to guide you through the installation and also includes the warranty terms.

## Package Contents

EdgeSwitch ES-16-150W

Power Cord

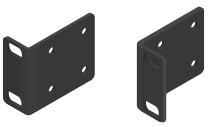

Mount Brackets
(Qty. 2)

Bracket Screws
(M4, Qty. 8)

Mounting Screws
(#10-32 x 5/8", Qty. 4)

Cage Nuts
(#10-32 x 5/8", Qty. 4)

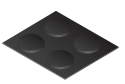

Rubber Feet
(Qty. 4)

Quick Start
Guide

TERMS OF USE: All Ethernet cabling runs must use CAT5 (or above). It is the customer's responsibility to follow local country regulations, including operation within legal frequency channels, output power, indoor cabling requirements, and Dynamic Frequency Selection (DFS) requirements.

## Installation Requirements

- Phillips screwdriver (for rack or wall mounting)
- Standard-sized, 19" wide rack with a minimum of 1U height available (for rack mounting)
- For indoor applications, use Category 5 (or above) UTP cabling approved for indoor use.
- For outdoor applications, shielded Category 5 (or above) cabling should be used for all wired Ethernet connections and should be grounded through the AC ground of the power supply.

  We recommend that you protect your networks from harmful outdoor environments and destructive ESD events with industrial-grade, shielded Ethernet cable from Ubiquiti Networks. For more details, visit **www.ubnt.com/toughcable**

WARNING: To reduce the risk of fire or electric shock, do not expose the switch to rain or moisture.

Note: Although the cabling can be located outdoors, the EdgeSwitch itself should be housed inside a protective enclosure.

## Hardware Overview

### Front Panel Ports

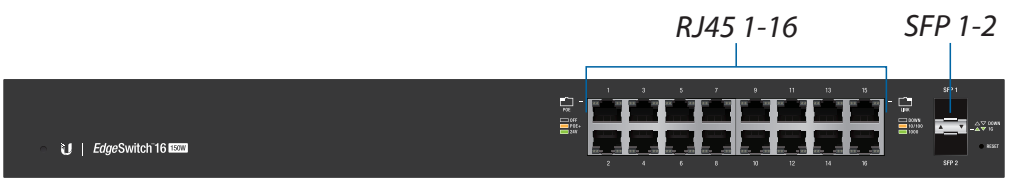


| Port | Description |
|---|---|
| RJ45 1-16 | RJ45 ports support 10/100/1000 Ethernet connections. |
| SFP 1-2 | Hot-swappable SFP ports support 1 Gbps connections. |

## Front Panel LEDs

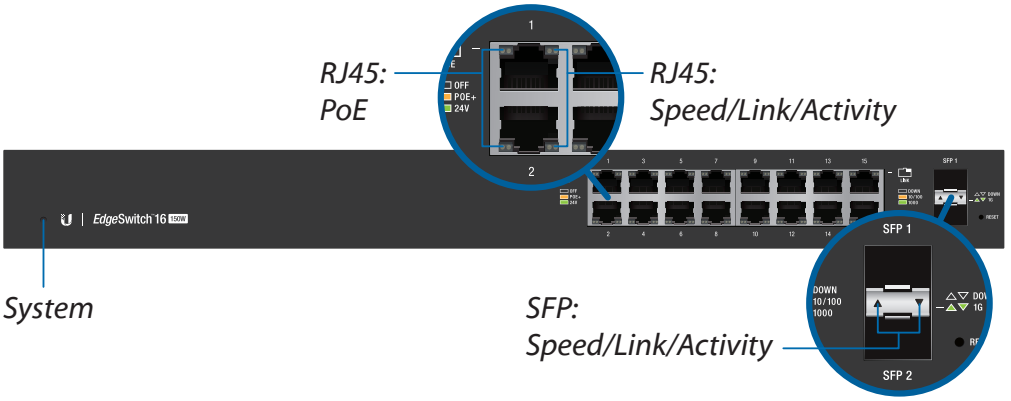


| | LED | State | Status |
|---|---|---|---|
| System | | White | Ready for Use |
| | | Blue | Bootup in Progress<br>Flashing Indicates Reset to Factory Defaults |
| RJ45 1-16 | PoE | Off | No PoE |
| | | Amber | IEEE 802.3af/802.3at |
| | | Green | 24V Passive |
| | Speed/ Link/ Act | Off | No Link |
| | | Amber | Link Established at 10/100 Mbps<br>Flashing Indicates Activity |
| | | Green | Link Established at 1000 Mbps<br>Flashing Indicates Activity |
| SFP 1-2 | Speed/ Link/ Act | Off | No Link |
| | | Green | Link Established at 1 Gbps<br>Flashing Indicates Activity |

## Front Panel Button

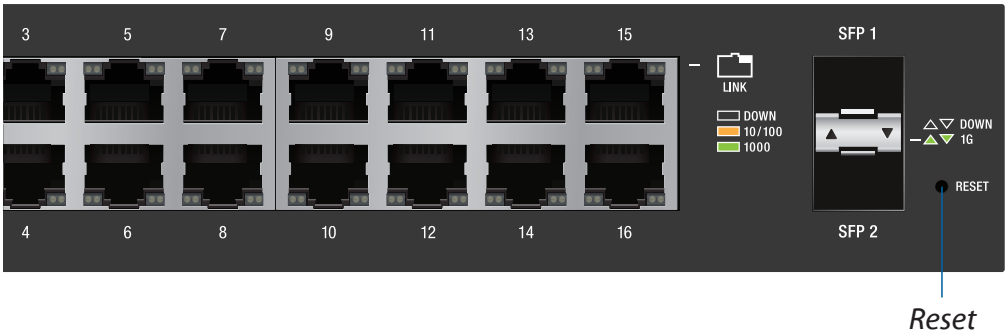


| Button | Description |
|---|---|
| Reset | There are two methods to reset the EdgeSwitch to factory defaults:<br><br>**Runtime Reset (Recommended)**<br><br>The EdgeSwitch should be running after bootup is complete, and the *System* LED is white. Press and hold the **Reset** button. The EdgeSwitch will reboot, and the *System* LED becomes blue after three seconds. Continue to hold the **Reset** button for about 15 seconds until the *System* LED flashes blue for two seconds. This indicates that the EdgeSwitch has reset to its factory defaults.<br><br>**Power-on Reset**<br><br>1. Disconnect the *Power Cord* from the EdgeSwitch.<br>2. While connecting the *Power Cord* to the EdgeSwitch, hold the **Reset** button for about 15 seconds until the *System* LED flashes blue for two seconds. This indicates that the EdgeSwitch has reset to its factory defaults. |

## Back Panel Console Port

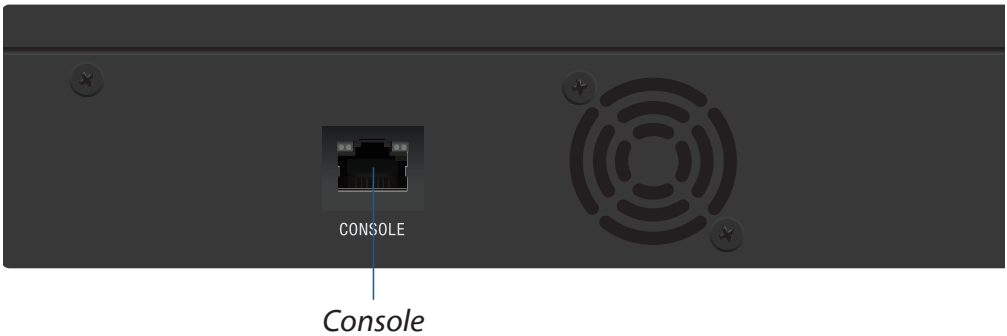


| Port | Description |
|---|---|
| Console | RJ45 serial console port for Command Line Interface (CLI) management. Use an RJ45-to-DB9, serial console cable, also known as a rollover cable, to connect the *Console* port to your computer. Then configure the following settings as needed:<br>• *Baud rate* 115200<br>• *Data bits* 8<br>• *Parity* NONE<br>• *Stop bits* 1<br>• *Flow control* NONE |

## Hardware Installation

The EdgeSwitch can be placed on a horizontal surface, mounted in a rack, or mounted on a wall.

WARNING: FAILURE TO PROVIDE PROPER VENTILATION MAY CAUSE FIRE HAZARD. KEEP AT LEAST 20 MM OF CLEARANCE NEXT TO THE VENTILATION HOLES FOR ADEQUATE AIRFLOW.

Place the *Rubber Feet* on the bottom of the EdgeSwitch if you do not plan to mount it. For rack or wall mounting, follow the appropriate steps:



www.4Gon.co.uk info@4gon.co.uk Tel: (0)0330 088 0295 Fax: +44 (0)1245 808299

## Rack Mounting

1. Attach the *Mount Brackets* to the EdgeSwitch using the eight *Bracket Screws*, positioning the brackets as shown below.

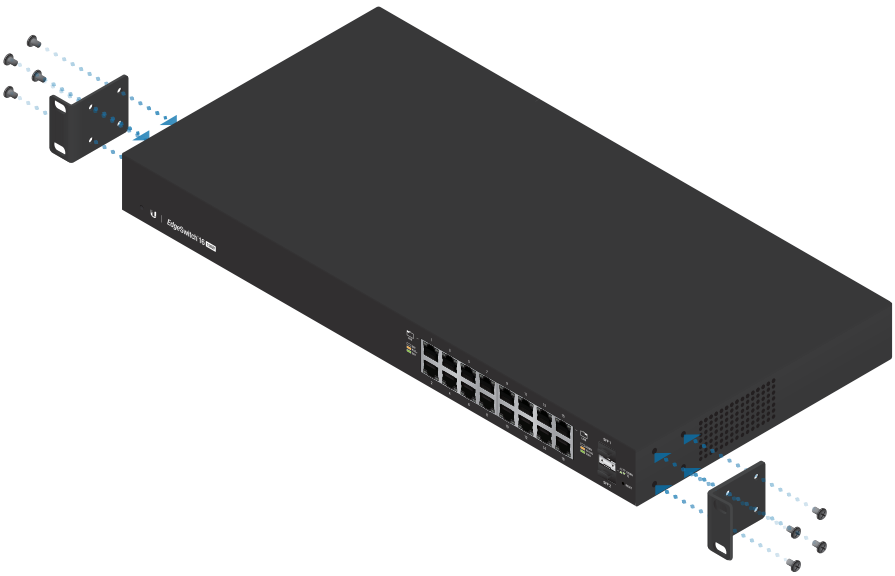

2. Attach the EdgeSwitch to the rack using the four *Mounting Screws*. (If the rack has square slots, then use the *Cage Nuts* with the *Mounting Screws*.)

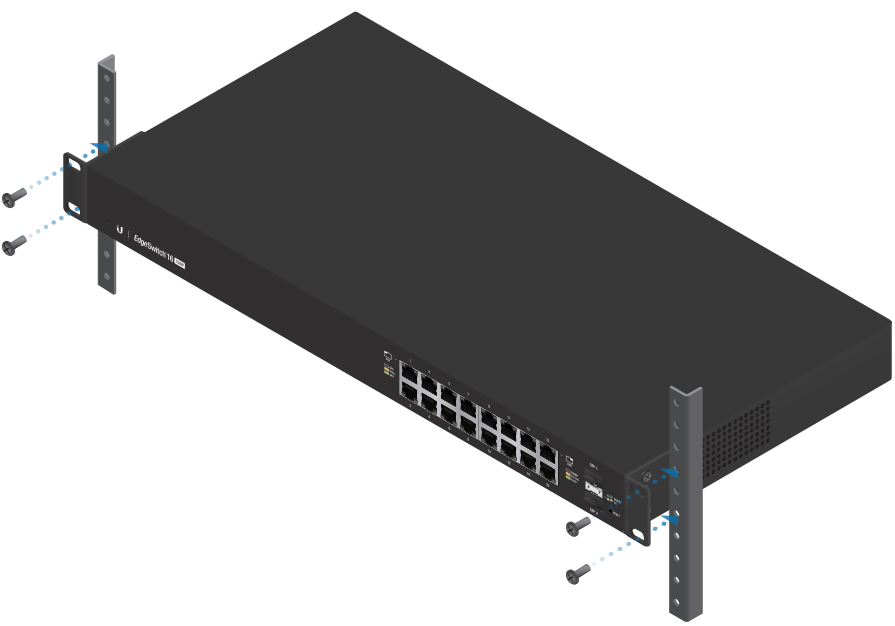

## Wall Mounting

1. Attach the *Mount Brackets* to the EdgeSwitch using the eight *Bracket Screws*, positioning the brackets as shown below.

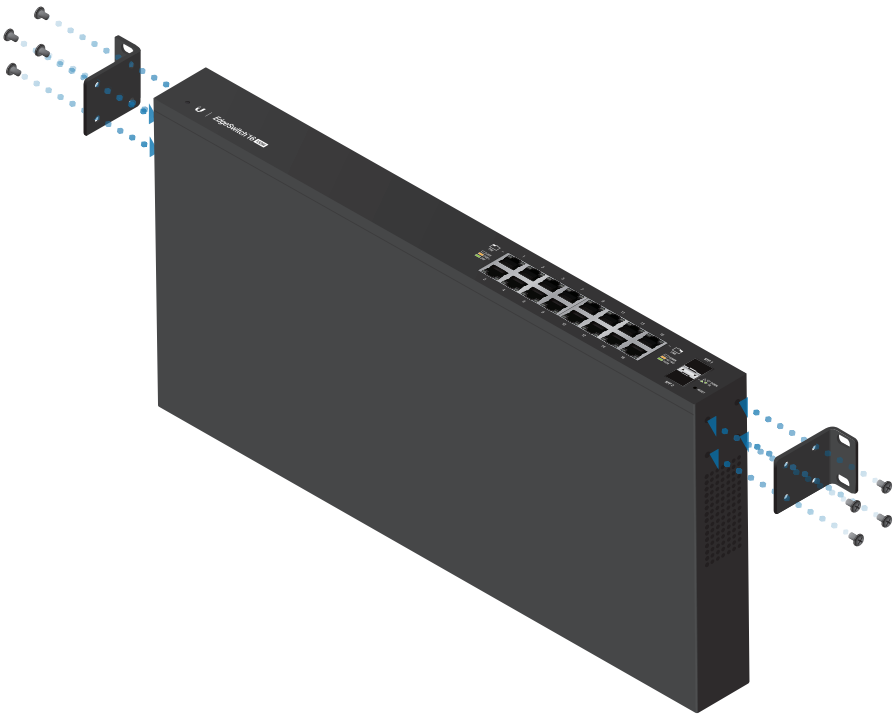

2. Secure the EdgePower to the wall using the appropriate fasteners and anchors (not included) for the wall.

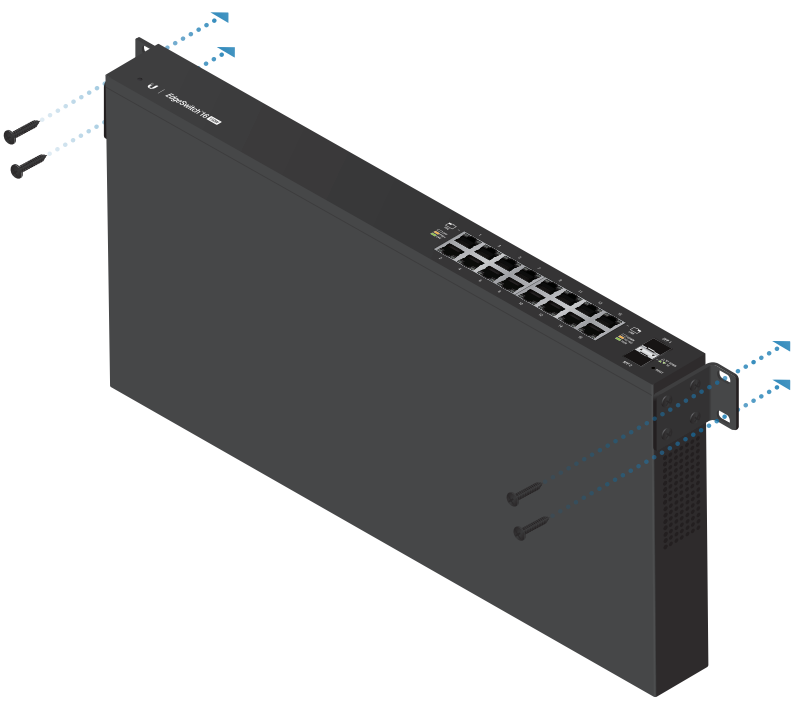

## Connecting Power

1. Connect the *Power Cord* to the *Power* port of the EdgeSwitch.

2. Plug the *Power Cord* into a power outlet.

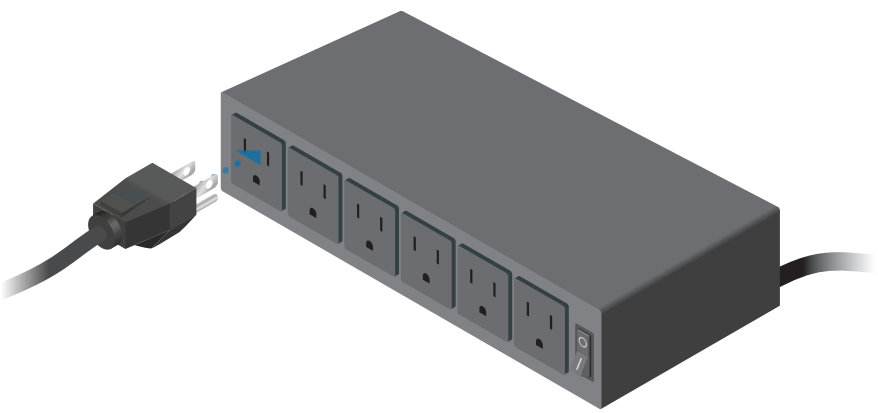

## Connecting Ethernet

1. Connect an Ethernet cable from your computer or host system to any Ethernet port on the EdgeSwitch.

2. Connect Ethernet cables from your devices to the other Ethernet ports on the EdgeSwitch.

## Using SFP Ports

To use an *SFP* port:

1. Remove the protective plug covering the *SFP* port.
2. Plug a compatible fiber module into the *SFP* port.

3. Connect the fiber optic cable to the fiber module. Then connect the other end of the cable to another fiber device.

For information about compatible fiber SFP modules, visit:
**community.ubnt.com/edgemax**

## Accessing the Configuration Interface

By default, the EdgeSwitch will try to get its IP address automatically using DHCP. If that fails, then it will use the default fallback IP address, *192.168.1.2*. Proceed to the appropriate section, *DHCP* or *Fallback IP Address*:

### DHCP

Use one of the following methods:

- Set up the DHCP server to provide a specific IP address to the EdgeSwitch based on its MAC address (on the label).
- Let the EdgeSwitch obtain an IP address and then check the DHCP server to see which IP address was assigned.

To log in, follow these steps:

1. Launch your web browser. Type the appropriate IP address in the address field. Press **enter** (PC) or **return** (Mac).
2. The login screen will appear. Enter **ubnt** in the *Username* and *Password* fields. Read the Ubiquiti License Agreement, and check the box next to *I agree to the terms of this License Agreement* to accept it. Click **Login**.

The EdgeSwitch Configuration Interface will appear. Customize additional settings as needed. For more information, refer to the EdgeSwitch documentation, which is available at **documentation.ubnt.com/edgemax**

## Fallback IP Address

1. Ensure that your computer (or other host machine) is connected to the EdgeSwitch.
2. Configure the Ethernet adapter on your host system with a static IP address on the 192.168.1.x subnet.
3. Launch your web browser. Type the appropriate IP address in the address field (*192.168.1.2* is the default fallback IP address). Press **enter** (PC) or **return** (Mac).

4. The login screen will appear. Enter **ubnt** in the *Username* and *Password* fields. Read the Ubiquiti License Agreement, and check the box next to *I agree to the terms of this License Agreement* to accept it. Click **Login**.

5. The EdgeSwitch Configuration Interface will appear. Go to **System** > **Connectivity** > **IPv4**.

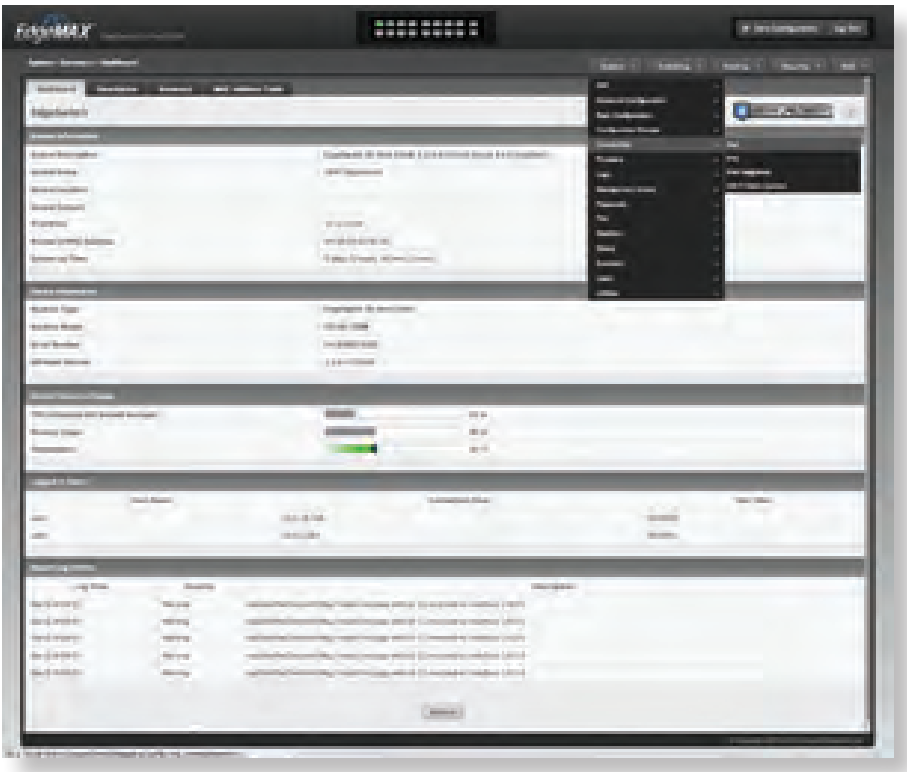

6. Change the *IP Address* to a unique IP address or select **DHCP** on the *IPv4* tab. Click **Submit**.

Note: If you change the IP settings, then the session will be cut off, and you will need to reconnect to the EdgeSwitch using the new IP address.

Customize additional settings as needed. For more information, refer to the EdgeSwitch documentation, which is available at: **documentation.ubnt.com/edgemax**

# Specifications

| EdgeSwitch ES-16-150W | |
|---|---|
| Dimensions | 443 x 43 x 221 mm (17.44 x 1.69 x 8.70") |
| Weight<br>With Mount Brackets | 2.80 kg (6.17 lb)<br>2.89 kg (6.37 lb) |
| Total Non-Blocking Line Rate | 18 Gbps |
| Max. Power Consumption | 150W |
| Power Method | 100-240VAC/50-60 Hz, Universal Input |
| Power Supply | AC/DC, Internal, 150W DC |
| Certifications | CE, FCC, IC |
| Rack-Mount | Yes, 1U High |
| Operating Temperature | -5 to 40° C (23 to 104° F) |
| Operating Humidity | 5 to 95% Noncondensing |
| Shock and Vibration | ETSI300-019-1.4 Standard |
| LEDs Per Port<br>RJ45 Data Ports<br>SFP Data Ports | <br>PoE, Speed/Link/Activity<br>Speed/Link/Activity |
| Networking Interfaces | (16) 10/100/1000 Mbps RJ45 Ports<br>(2) 1 Gbps SFP Ports |
| Management Interface | UART Console Out-of-Band,<br>Ethernet In-Band |
| PoE Interfaces | PoE+ IEEE 802.3af/at (pins 1, 2+; 3, 6-)<br>24VDC Passive PoE (pins 4, 5+; 7, 8-) |
| Voltage Range<br>802.3at Mode<br>24V Passive PoE | <br>50-57V<br>20-27V |
| Max. Wattage per Port<br>PoE+<br>Passive PoE | <br>34.2W<br>17W |

## Safety Notices

1. Read, follow, and keep these instructions.
2. Heed all warnings.
3. Only use attachments/accessories specified by the manufacturer.

WARNING: Failure to provide proper ventilation may cause fire hazard. Keep at least 20mm of clearance next to the ventilation holes for adequate airflow.

WARNING: To reduce the risk of fire or electric shock, do not expose this product to rain or moisture.

WARNING: Do not use this product in location that can be submerged by water.

WARNING: Avoid using this product during an electrical storm. There may be a remote risk of electric shock from lightning.

## Electrical Safety Information

1. Compliance is required with respect to voltage, frequency, and current requirements indicated on the manufacturer's label. Connection to a different power source than those specified may result in improper operation, damage to the equipment or pose a fire hazard if the limitations are not followed.
2. There are no operator serviceable parts inside this equipment. Service should be provided only by a qualified service technician.
3. This equipment is provided with a detachable power cord which has an integral safety ground wire intended for connection to a grounded safety outlet.
    a. Do not substitute the power cord with one that is not the provided approved type. Never use an adapter plug to connect to a 2-wire outlet as this will defeat the continuity of the grounding wire.
    b. The equipment requires the use of the ground wire as a part of the safety certification, modification or misuse can provide a shock hazard that can result in serious injury or death.
    c. Contact a qualified electrician or the manufacturer if there are questions about the installation prior to connecting the equipment.
    d. Protective earthing is provided by Listed AC adapter. Building installation shall provide appropriate short-circuit backup protection.
    e. Protective bonding must be installed in accordance with local national wiring rules and regulations.

# Limited Warranty

UBIQUITI NETWORKS, Inc ("UBIQUITI NETWORKS") warrants that the product(s) furnished hereunder (the "Product(s)") shall be free from defects in material and workmanship for a period of one (1) year from the date of shipment by UBIQUITI NETWORKS under normal use and operation. UBIQUITI NETWORKS' sole and exclusive obligation and liability under the foregoing warranty shall be for UBIQUITI NETWORKS, at its discretion, to repair or replace any Product that fails to conform to the above warranty during the above warranty period. The expense of removal and reinstallation of any Product is not included in this warranty. The warranty period of any repaired or replaced Product shall not extend beyond its original term.

## Warranty Conditions

The above warranty does not apply if the Product:

(I) has been modified and/or altered, or an addition made thereto, except by Ubiquiti Networks, or Ubiquiti Networks' authorized representatives, or as approved by Ubiquiti Networks in writing;

(II) has been painted, rebranded or physically modified in any way;

(III) has been damaged due to errors or defects in cabling;

(IV) has been subjected to misuse, abuse, negligence, abnormal physical, electromagnetic or electrical stress, including lightning strikes, or accident;

(V) has been damaged or impaired as a result of using third party firmware;

(VI) has no original Ubiquiti MAC label, or is missing any other original Ubiquiti label(s); or

(VII) has not been received by Ubiquiti within 30 days of issuance of the RMA.

In addition, the above warranty shall apply only if: the product has been properly installed and used at all times in accordance, and in all material respects, with the applicable Product documentation; all Ethernet cabling runs use CAT5 (or above), and for outdoor installations, shielded Ethernet cabling is used, and for indoor installations, indoor cabling requirements are followed.

## Returns

No Products will be accepted for replacement or repair without obtaining a Return Materials Authorization (RMA) number from UBIQUITI NETWORKS during the warranty period, and the Products being received at UBIQUITI NETWORKS' facility freight prepaid in accordance with the RMA process of UBIQUITI NETWORKS. Products returned without an RMA number will not be processed and will be returned freight collect or subject to disposal. Information on the RMA process and obtaining an RMA number can be found at: **www.ubnt.com/support/warranty**.

## Disclaimer

EXCEPT FOR ANY EXPRESS WARRANTIES PROVIDED HEREIN, UBIQUITI NETWORKS, ITS AFFILIATES, AND ITS AND THEIR THIRD PARTY DATA, SERVICE, SOFTWARE AND HARDWARE PROVIDERS HEREBY DISCLAIM AND MAKE NO OTHER REPRESENTATION OR WARRANTY OF ANY KIND, EXPRESS, IMPLIED OR STATUTORY, INCLUDING, BUT NOT LIMITED TO, REPRESENTATIONS, GUARANTEES, OR WARRANTIES OF MERCHANTABILITY, ACCURACY, QUALITY OF SERVICE OR RESULTS, AVAILABILITY, SATISFACTORY QUALITY, LACK OF VIRUSES, QUIET ENJOYMENT, FITNESS FOR A PARTICULAR PURPOSE AND NON-INFRINGEMENT AND ANY WARRANTIES ARISING FROM ANY COURSE OF DEALING, USAGE OR TRADE PRACTICE IN CONNECTION WITH SUCH PRODUCTS AND SERVICES. BUYER ACKNOWLEDGES THAT NEITHER UBIQUITI NETWORKS NOR ITS THIRD PARTY PROVIDERS CONTROL BUYER'S EQUIPMENT OR THE TRANSFER OF DATA OVER COMMUNICATIONS FACILITIES, INCLUDING THE INTERNET, AND THAT THE PRODUCTS AND SERVICES MAY BE SUBJECT TO LIMITATIONS, INTERRUPTIONS, DELAYS, CANCELLATIONS AND OTHER PROBLEMS INHERENT IN THE USE OF COMMUNICATIONS FACILITIES. UBIQUITI NETWORKS, ITS AFFILIATES AND ITS AND THEIR THIRD PARTY PROVIDERS ARE NOT RESPONSIBLE FOR ANY INTERRUPTIONS, DELAYS, CANCELLATIONS, DELIVERY FAILURES, DATA LOSS, CONTENT CORRUPTION, PACKET LOSS, OR OTHER DAMAGE RESULTING FROM ANY OF THE FOREGOING. In addition, UBIQUITI NETWORKS does not warrant that the operation of the Products will be error-free or that operation will be uninterrupted. In no event shall UBIQUITI NETWORKS be responsible for damages or claims of any nature or description relating to system performance, including coverage, buyer's selection of products (including the Products) for buyer's application and/or failure of products (including the Products) to meet government or regulatory requirements.

## Limitation of Liability

EXCEPT TO THE EXTENT PROHIBITED BY LOCAL LAW, IN NO EVENT WILL UBIQUITI OR ITS SUBSIDIARIES, AFFILIATES OR SUPPLIERS BE LIABLE FOR DIRECT, SPECIAL, INCIDENTAL, CONSEQUENTIAL OR OTHER DAMAGES (INCLUDING LOST PROFIT, LOST DATA, OR DOWNTIME COSTS), ARISING OUT OF THE USE, INABILITY TO USE, OR THE RESULTS OF USE OF THE PRODUCT, WHETHER BASED IN WARRANTY, CONTRACT, TORT OR OTHER LEGAL THEORY, AND WHETHER OR NOT ADVISED OF THE POSSIBILITY OF SUCH DAMAGES.

## Note

Some countries, states and provinces do not allow exclusions of implied warranties or conditions, so the above exclusion may not apply to you. You may have other rights that vary from country to country, state to state, or province to province. Some countries, states and provinces do not allow the exclusion or limitation of liability for incidental or consequential damages, so the above limitation may not apply to you. EXCEPT TO THE EXTENT ALLOWED BY LOCAL LAW, THESE WARRANTY TERMS DO NOT EXCLUDE, RESTRICT OR MODIFY, AND ARE IN ADDITION TO, THE MANDATORY STATUTORY RIGHTS APPLICABLE TO THE LICENSE OF ANY SOFTWARE (EMBEDDED IN THE PRODUCT) TO YOU. The United Nations Convention on Contracts for the International Sale of Goods shall not apply to any transactions regarding the sale of the Products.

# Compliance

## FCC

Changes or modifications not expressly approved by the party responsible for compliance could void the user's authority to operate the equipment.

This device complies with Part 15 of the FCC Rules. Operation is subject to the following two conditions:

1. This device may not cause harmful interference, and
2. This device must accept any interference received, including interference that may cause undesired operation.

NOTE: This equipment has been tested and found to comply with the limits for a Class A digital device, pursuant to part 15 of the FCC Rules. These limits are designed to provide reasonable protection against harmful interference when the equipment is operated in a commercial environment. This equipment generates, uses, and can radiate radio frequency energy and, if not installed and used in accordance with the instruction manual, may cause harmful interference to radio communications. Operations of this equipment in a residential area is likely to cause harmful interference in which case the user will be required to correct the interference at his own expense.

## Industry Canada

### CAN ICES-3(A)/NMB-3(A)

This Class A digital apparatus complies with Canadian CAN ICES-3(A).

### CAN ICES-3(A)/NMB-3(A)

Cet appareil numérique de la classe A est conforme à la norme NMB-3(A) Canada.

## Australia and New Zealand

Warning: This is a Class A product. In a domestic environment this product may cause radio interference in which case the user may be required to take adequate measures.

## CE Marking

CE marking on this product represents the product is in compliance with all directives that are applicable to it.

## RoHS/WEEE Compliance Statement

### English

European Directive 2012/19/EU requires that the equipment bearing this symbol on the product and/or its packaging must not be disposed of with unsorted municipal waste. The symbol indicates that this product should be disposed of separately from regular household waste streams. It is your responsibility to dispose of this and other electric and electronic equipment via designated collection facilities appointed by the government or local authorities. Correct disposal and recycling will help prevent potential negative consequences to the environment and human health. For more detailed information about the disposal of your old equipment, please contact your local authorities, waste disposal service, or the shop where you purchased the product.

### Deutsch

Die Europäische Richtlinie 2012/19/EU verlangt, dass technische Ausrüstung, die direkt am Gerät und/oder an der Verpackung mit diesem Symbol versehen ist, nicht zusammen mit unsortiertem Gemeindeabfall entsorgt werden darf. Das Symbol weist darauf hin, dass das Produkt von regulärem Haushaltmüll getrennt entsorgt werden sollte. Es liegt in Ihrer Verantwortung, dieses Gerät und andere elektrische und elektronische Geräte über die dafür zuständigen und von der Regierung oder örtlichen Behörden dazu bestimmten Sammelstellen zu entsorgen. Ordnungsgemäßes Entsorgen und Recyceln trägt dazu bei, potentielle negative Folgen für Umwelt und die menschliche Gesundheit zu vermeiden. Wenn Sie weitere Informationen zur Entsorgung Ihrer Altgeräte benötigen, wenden Sie sich bitte an die örtlichen Behörden oder städtischen Entsorgungsdienste oder an den Händler, bei dem Sie das Produkt erworben haben.

## Español

La Directiva 2012/19/UE exige que los equipos que lleven este símbolo en el propio aparato y/o en su embalaje no deben eliminarse junto con otros residuos urbanos no seleccionados. El símbolo indica que el producto en cuestión debe separarse de los residuos domésticos convencionales con vistas a su eliminación. Es responsabilidad suya desechar este y cualesquiera otros aparatos eléctricos y electrónicos a través de los puntos de recogida que ponen a su disposición el gobierno y las autoridades locales. Al desechar y reciclar correctamente estos aparatos estará contribuyendo a evitar posibles consecuencias negativas para el medio ambiente y la salud de las personas. Si desea obtener información más detallada sobre la eliminación segura de su aparato usado, consulte a las autoridades locales, al servicio de recogida y eliminación de residuos de su zona o pregunte en la tienda donde adquirió el producto.

## Français

La directive européenne 2012/19/UE exige que l'équipement sur lequel est apposé ce symbole sur le produit et/ou son emballage ne soit pas jeté avec les autres ordures ménagères. Ce symbole indique que le produit doit être éliminé dans un circuit distinct de celui pour les déchets des ménages. Il est de votre responsabilité de jeter ce matériel ainsi que tout autre matériel électrique ou électronique par les moyens de collecte indiqués par le gouvernement et les pouvoirs publics des collectivités territoriales. L'élimination et le recyclage en bonne et due forme ont pour but de lutter contre l'impact néfaste potentiel de ce type de produits sur l'environnement et la santé publique. Pour plus d'informations sur le mode d'élimination de votre ancien équipement, veuillez prendre contact avec les pouvoirs publics locaux, le service de traitement des déchets, ou l'endroit où vous avez acheté le produit.

## Italiano

La direttiva europea 2012/19/UE richiede che le apparecchiature contrassegnate con questo simbolo sul prodotto e/o sull'imballaggio non siano smaltite insieme ai rifiuti urbani non differenziati. Il simbolo indica che questo prodotto non deve essere smaltito insieme ai normali rifiuti domestici. È responsabilità del proprietario smaltire sia questi prodotti sia le altre apparecchiature elettriche ed elettroniche mediante le specifiche strutture di raccolta indicate dal governo o dagli enti pubblici locali. Il corretto smaltimento ed il riciclaggio aiuteranno a prevenire conseguenze potenzialmente negative per l'ambiente e per la salute dell'essere umano. Per ricevere informazioni più dettagliate circa lo smaltimento delle vecchie apparecchiature in Vostro possesso, Vi invitiamo a contattare gli enti pubblici di competenza, il servizio di smaltimento rifiuti o il negozio nel quale avete acquistato il prodotto.

# Declaration of Conformity

| | |
|---|---|
| **Česky [Czech]** | UBIQUITI NETWORKS tímto prohlašuje, že toto UBIQUITI NETWORKS zařízení, je ve shod se základními požadavky a dalšími příslušnými ustanoveními směrnic 2014/30/EU, 2014/35/EU. |
| **Dansk [Danish]** | Hermed, UBIQUITI NETWORKS, erklærer at denne UBIQUITI NETWORKS enhed, er i overensstemmelse med de væsentlige krav og øvrige relevante krav i direktiver 2014/30/EU, 2014/35/EU. |
| **Nederlands [Dutch]** | Hierbij verklaart UBIQUITI NETWORKS, dat deze UBIQUITI NETWORKS apparaat, in overeenstemming is met de essentiële eisen en de andere relevante bepalingen van richtlijnen 2014/30/EU, 2014/35/EU. |
| **English** | Hereby, UBIQUITI NETWORKS, declares that this UBIQUITI NETWORKS device, is in compliance with the essential requirements and other relevant provisions of Directives 2014/30/EU, 2014/35/EU. |
| **Eesti [Estonian]** | Käesolevaga UBIQUITI NETWORKS kinnitab, et antud UBIQUITI NETWORKS seade, on vastavus olulistele nõuetele ja teistele asjakohastele sätetele direktiivide 2014/30/EL, 2014/35/EL. |
| **Suomi [Finnish]** | Täten UBIQUITI NETWORKS vakuuttaa, että tämä UBIQUITI NETWORKS laite, on yhdenmukainen olennaisten vaatimusten ja muiden sitä koskevien direktiivien 2014/30/EU, 2014/35/EU. |
| **Français [French]** | Par la présente UBIQUITI NETWORKS déclare que l'appareil UBIQUITI NETWORKS, est conforme aux exigences essentielles et aux autres dispositions pertinentes des directives 2014/30/UE, 2014/35/UE. |
| **Deutsch [German]** | Hiermit erklärt UBIQUITI NETWORKS, dass sich dieses UBIQUITI NETWORKS Gerät, in Übereinstimmung mit den grundlegenden Anforderungen und den anderen relevanten Vorschriften der Richtlinien 2014/30/EU, 2014/35/EU befindet. |
| **Ελληνική [Greek]** | Δια του παρόντος, UBIQUITI NETWORKS, δηλώνει ότι αυτή η συσκευή UBIQUITI NETWORKS, είναι σε συμμόρφωση με τις βασικές απαιτήσεις και τις λοιπές σχετικές διατάξεις των οδηγιών 2014/30/ΕΕ, 2014/35/ΕΕ. |
| **Magyar [Hungarian]** | Ezennel UBIQUITI NETWORKS kijelenti, hogy ez a UBIQUITI NETWORKS készülék megfelel az alapvető követelményeknek és más vonatkozó 2014/30/EU, 2014/35/EU irányelvek rendelkezéseit. |
| **Íslenska [Icelandic]** | Hér, UBIQUITI NETWORKS, því yfir að þetta UBIQUITI NETWORKS tæki er í samræmi við grunnkröfur og önnur viðeigandi ákvæði tilskipana 2014/30/ESB, 2014/35/ESB. |
| **Italiano [Italian]** | Con la presente, UBIQUITI NETWORKS, dichiara che questo dispositivo UBIQUITI NETWORKS, è conforme ai requisiti essenziali ed alle altre disposizioni pertinenti delle direttive 2014/30/UE, 2014/35/UE. |
| **Latviski [Latvian]** | Ar šo, UBIQUITI NETWORKS, deklarē, ka UBIQUITI NETWORKS ierīce, ir saskaņā ar būtiskajām prasībām un citiem attiecīgiem noteikumiem Direktīvās 2014/30/ES, 2014/35/ES. |

| | |
|---|---|
| **Lietuviškai [Lithuanian]** | UBIQUITI NETWORKS deklaruoja, kad šis UBIQUITI NETWORKS įrenginys atitinka esminius reikalavimus ir kitas 2014/30/ES, 2014/35/ES Direktyvų nuostatas. |
| **Malti [Maltese]** | Hawnhekk, UBIQUITI NETWORKS, tiddikjara li dan il-mezz UBIQUITI NETWORKS huwa konformi mar-rekwiżiti essenzjali u dispożizzjonijiet rilevanti oħrajn ta 'Direttivi 2014/30/UE, 2014/35/UE. |
| **Norsk [Norwegian]** | Herved UBIQUITI NETWORKS, erklærer at denne UBIQUITI NETWORKS enheten, er i samsvar med de grunnleggende kravene og andre relevante bestemmelser i direktivene 2014/30/EU, 2014/35/EU. |
| **Polski [Polish]** | Niniejszym, Ubiquiti Networks, oświadcza, że urządzenie UBIQUITI NETWORKS, jest zgodny z zasadniczymi wymaganiami oraz pozostałymi stosownymi postanowieniami Dyrektyw 2014/30/UE, 2014/35/UE. |
| **Português [Portuguese]** | UBIQUITI NETWORKS declara que este dispositivo UBIQUITI NETWORKS, está conforme com os requisitos essenciais e outras disposições das Directivas 2014/30/UE, 2014/35/UE. |
| **Română [Romanian]** | Prin prezenta, UBIQUITI NETWORKS declară că acest dispozitiv UBIQUITI NETWORKS este în conformitate cu cerințele esențiale și alte prevederi relevante ale Directivelor 2014/30/UE, 2014/35/UE. |
| **Slovensky [Slovak]** | Týmto UBIQUITI NETWORKS, prehlasuje, že toto UBIQUITI NETWORKS zariadenie, je v súlade so základnými požiadavkami a ďalšími relevantnými ustanoveniami smernice 2014/30/EÚ, 2014/35/EÚ. |
| **Español [Spanish]** | Por medio de la presente UBIQUITI NETWORKS declara que este dispositivo UBIQUITI NETWORKS, cumple con los requisitos esenciales y cualesquiera otras disposiciones aplicables o exigibles de las Directivas 2014/30/UE, 2014/35/UE. |
| **Svenska [Swedish]** | Härmed UBIQUITI NETWORKS, intygar att denna UBIQUITI NETWORKS enhet är i överensstämmelse med de väsentliga egenskapskrav och övriga relevanta bestämmelser som framgår av direktiven 2014/30/EU, 2014/35/EU. |

## Online Resources

Support **support.ubnt.com**

Community **community.ubnt.com**

Downloads **downloads.ubnt.com**

www.4Gon.co.uk info@4gon.co.uk Tel: (0)0330 088 0295 Fax: +44 (0)1245 808299

www.ubnt.com

©2015-2016 Ubiquiti Networks, Inc. All rights reserved. Ubiquiti, Ubiquiti Networks, the Ubiquiti U logo, the Ubiquiti beam logo, EdgeMAX, EdgeOS, EdgeSwitch, and TOUGHCable are trademarks or registered trademarks of Ubiquiti Networks, Inc. in the United States and in other countries. All other trademarks are the property of their respective owners.

PH041116

www.4Gon.co.uk info@4gon.co.uk Tel: (0)0330 088 0295 Fax: +44 (0)1245 808299