HUD Mining Supplies (Pty) LTD

Physical: 25 – 31 Brewery Street, Isando Ext 1, South Africa
Postal: Postnet Suite 99, Private Bag X10010, Edenvale 1610, RSA
Telephone: +27 11 974 1500 Fax: +27 11 974 1506
Email: info@hud.co.za

AQ MetreEater Pneumatic Diamond Drill:

O & M Manual and Parts List



Title	Date	By	Sign	Approved	Sign
AQ MetreEater Pneumatic Diamond Drill O & M Manual and Parts List	**3.8.09**	**I Omand**		**D Huddy**	
Revision	Date	By	Sign	Approved	Sign
1. General Update	**21.8.13**	**I Omand**			

(NB: Picture above includes rod puller)

1. AQ MetreEater Pneumatic Diamond Drill Specifications

Rating	200m horizontal - AQ 150m vertical up or down - AQ
Spindle speed	0 – 2,000rpm
Weight: Drill	125kg (incl. silencer)
Bar Clamp	25kg
Rod Puller	77kg
Motor	Vane type air motor (5 vanes per motor)

Power	**Output, kW**	**Inlet Air Pressure**
	30	600
	24	500
	18	400
	12	300

Air Consumption	From 8 to 20m^3/min (280 to 700cfm)
Operating pressure	300 - 600kPa
Feed screw	ID suitable for AQ rods
Feedscrew run	820 mm (Total length 1,515 mm)
Chuck	3 jaw with recessed chuck screws, for up to AQ rod size
Drill	Totally enclosed unit containing all moving parts. The air motor is an easily detachable sub-assembly.
Feed gears	The drill is equipped with 3 feed gears, with available selection as follows:

	Rev/cm advance	**Advance at 1,400rpm cm/min**
Fine	200	7.0
Medium	125	11.2
Coarse	100	14.0

Feed gear change	Interlock system. Neutral / reverse position located between each gear. Fine is handle fully clockwise, medium is in the centre and coarse is fully counter clockwise.
Mounting	Clamps fit 114mm (4 ½“) OD Pipe
Angle of drilling	Designed to drill through 360˚.
Rod puller	152.4 diameter with 760 mm stroke. 50mm diameter piston rod 800 kg capacity at 500 kPa

WARNING

IMPORTANT: Before start up of the drill follow the procedures listed below:

- **Check lubricator oil level. Use oil grade SAE30.**
- **Blow out air hose before connecting to lubricator and air motor.**
- **Ensure lubricating oil is discharging from lubricator before connecting supply hose to drill.**
- **Do not overspeed drill particularly on start up with light loads.**
- **Ensure lubricant is passing through the air motor before drilling.**
- **Keep clear of all moving parts and comply with the normal safety rules for operating a pneumatic machine and for drilling holes.**

NOTE: the recommended chuck spindle speed is ± 1400RPM

2. Standard Operating Procedures

Mount the drill on a standard 114mm OD bar, align it in the correct direction, tighten all bolts and ensure the bar is secure. The air hose must be blown out before connecting to the lubricator and the oil level (SAE 30) must be checked and the drill greased.

Install the drill rod, corebarrel, reaming shell, bit and water swivel, then connect the water hose. Ensure the chuck is tightened properly and centrally when collaring.

Select the fine feed gear by turning the gear lever fully clockwise, open the air valve slightly for slow rotation and use a lever against the bit to stabilise it.

For normal drilling, select the feed gear to suit the ground being drilled. i.e. the machine should not labour with too coarse a feed and the bit should not polish with too fine a feed. Fine is fully clockwise, medium is in the centre and coarse is fully counter-clockwise.

When the feedscrew has been run out to its full length, secure the rods against the bottom of the hole, shut off the water, loosen the chuck, engage neutral / reverse gear (ie. any position between the gears). Then secure the hand-wheel, and open the air slightly to turn the air motor slowly, which will reverse the feedscrew. Pay attention to not reverse the buffer rubber into the drill front cover. When fully reversed, shut off the air, re-tighten the chuck, select the previous gear and continue drilling as before.

To trip the rods for a bit change, break the rods in front of the drill, and remove the rods and water swivel from behind the drill and in the feedscrew. Then swing the drill out of the way on its hinge and pull or push the rods by moving the lever on the valve backwards and forwards. Ensure that the cam is the right way round to grip the rods in the desired direction.

Important Information:

- Be aware of safety when operating the drill.
- Be aware that any dirt will damage the air motor and vanes, so pay particular attention to blowing out the air hose before connecting up and, during transportation, plug the motor inlet and outlet ports.

- Protect the feed screw with a hose cover to prevent damage to the threads.
- Ensure the drill is correctly aligned as misalignment will cause vibration, breakage of the feedscrew and shorten the life of the drill.
- Do not overspeed the motor on light loads as this will cause the vanes to burn. The air motor will run cool when under load due to the refrigerating effect of the air but this does not happen under light loads.
- Do not force the gear lever but rather rotate the drill slowly while applying pressure on the lever to "feel" the engagement.
- Do not run the chuck against the drill casing when reversing the feedscrew.
- Keep the drill clean; the bolts tight and clean and service the chuck when necessary.

3. Machine Care

Lubrication:

- Main Housing - grease all grease points 3 to 4 shots every shift. Use EP 2 grease.
- Feedscrew - apply grease manually on feedscrew when stationary, as necessary (minimum once per shift). Use EP 2 grease.
- Air Motor Lubricant - SAE 30 Mineral Oil. Continuous atomised lubrication is provided via the airline lubricator. Check oil level before start of shift and every hour thereafter. The lubricator should be set from ½ - 1 turn to use 0.75 litres of oil per hour.

Changing of motor vanes on site:

- Remove four bolts and washers (104/105) and remove end cover (88). Carefully remove gasket (107) - to be reused.
- Release lock washer lock (99) and unscrew nut (98). Remove lock washer.
- Extract end plate (92) - utilising two M8 x 50 bolts screwed into end plate. The end plate can then easily be coaxed out by pulling on the bolts.
- Remove the five worn vanes.
- Fit new vanes (rotate rotor for easy fitting of vanes). To reassemble, reverse the procedure.

4. Major Repairs

General:
To perform these repairs, you will require a light manually operated hydraulic workshop press and a MetreEater maintenance kit (31881395).
Sub-assemblies are subject to inspection and do not need stripping if they are in good order.

The outer surfaces of the machine should be cleaned thoroughly, preferably using pressure cleaning methods.

It is advisable to mount the machine on a 114mm O.D. bar frame of suitable height for easier dismantling and assembling of the machine.

Note: The hydraulic press may be improvised with a solid steel top work bench incorporating the toolkit adaptor plate 32099810 which serves as a basic stripping / assy tool.

NB: It is important that all wearing parts such as bearings, gears, feednut and the feed selector key (23) are properly inspected and replaced if significant wear is evident.

All oil seals and "O" rings are to be renewed with every service.

The hand wheel nut (40) is to be finally tightened to 450 - 500 Nm using tube spanner 31830005, locking tool 31881839 and torque wrench 41881843.

All sub-assemblies / parts are to be properly and adequately lubricated on assembly with the correct lubricant (see lubrication under machine care). Check free rotation as each part is added by hand turning.

The machine must be test run for approximately 10 minutes after service and the correct operation of the gear lever must be checked.

Disassembly and assembly procedure:

To remove the chuck:

- Loosen six bolts (123) and unscrew from feed screw (67). Remove buffer rubber(125).

To strip and reassemble the chuck:

- Remove six bolts (123) holding chuck together which will release thrust plate (119), body (118) and thrust washer (122) from back plate (117).
- Remove 3 dog screws (121).
- Remove sleeves (120) from chuck body.
- Thoroughly clean parts, inspect and replace worn parts. To reassemble, reverse the procedure.

To remove the rod puller:

- Loosen nut (152) and swivel drill to its limit. Remove two bolts (172) washer (168) and lift the rod puller out of clamp seat.

To strip and reassemble the rod puller jaw assembly:

- Loosen shaft nut (207) and remove washer. Slip off jaw assembly from piston shaft.
- Remove pin (209) and nut (212) - both bottom jaw (211) and top jaw (210) can then be removed from the jaw body.
- Thoroughly clean parts, inspect and replace worn parts.
- Reverse above order for assembly.

To strip and reassemble the valve assembly:

- Remove control valve securing bolts (200) and washers (196), slip valve and tube assembly from cylinder rear cover.
- Remove Sellock pin (198) from valve and disassemble valve plug (197) from control lever (193).
- Thoroughly clean parts, inspect and replace worn parts.
- Reverse above order for assembly.

To strip and assemble the front cylinder cover:

- Remove four end cover retaining bolts and washers (200) and (216) - slip end cover

(204) from piston shaft (190).
- Remove seal (203), wiper (205) and "O" ring (199).
- Thoroughly clean parts, inspect and replace worn parts.
- Reverse above order for assembly.

To strip and assemble the piston shaft:
- Slide piston shaft assembly (190/187) from cylinder sleeve (191).
- Remove buffer (189) from piston shaft and "O" rings (185) from piston.
- Thoroughly clean parts, inspect and replace worn parts.
- Reverse above order for assembly.

To assemble the rod puller:
- Clean and inspect cylinder tube section for wear and replace if necessary.
- Lubricate "U" rings on piston with light grease and slide piston shaft assembly into cylinder sleeve.
- Lubricate shaft seal, end cover and shaft with SAE30 oil and slide end cover assembly with new "O" ring (199) in position on to piston shaft.
- Locate end cover spigot in cylinder sleeve bore.
- Insert the four retaining bolts / washers (200/216) and tighten.
- Ensure that new "O" ring (184) is in position and lubricated.
- Slide valve assembly transfer tube in position.
- Ensure that new "O" ring (201) is in position and insert securing bolts (200) and washer in position and tighten.
- Slide rod puller jaw assembly on to piston shaft, fit shaft nut with washer (206/207) and tighten.

To remove the air motor:
- Remove three bolts and washer (103/106) releasing the complete air motor assembly.

To strip and reassemble the air motor:
- Remove rear cover (88), four bolts and washer (104/105). Remove gasket (107).
- Slide complete rotor assembly from motor housing (87). (Press out if assembly is seized in housing using adaptor plate Tool No. 32099810).
- Secure rotor assembly vertically in a vice held by nut (101). Release lock of lock washer (99) and remove nut (98).
- Remove rear end plate (92) complete with bearing.
- Remove sleeve (89)
- Remove worn vanes (91) from rotor.
- Clamp rotor body in vice and remove split pin (102), nut (101) and washer (100).
- Place rotor in press adaptor plate (Tool No. 31830009) vertically, resting on front end plate (93) and press on rotor shaft removing front end plate assembly and gear (85).
- Remove key (86).
- Remove bearings (97) from both front and rear end plate (92) and (93).
- Check spacers (94) for wear.
- Thoroughly clean all parts, inspect and replace worn parts.
- Reverse above order for assembly taking note of the keyway that positions the sleeve in the housing.
- Ensure all parts are well oiled as they are being assembled to ensure lubrication for the first start situation.
- Turn motor shaft by hand to check free rotation and ensure that vanes move freely.

To disassemble the main drive assembly:

- This is done in the following order:
  1st : Intermediate gear assembly.
  2nd : Front housing, primary gear and quill.
  3rd : Rear housing.
  4th : Feednut.

  Note: Prior to disassembly - loosen the hand wheel nut item 40 with tube spanner No. 81830005 in conjunction with locking Tool No. 31881839.

To remove the intermediate gear assembly:

- Unscrew cover retaining setscrews (66) and remove complete intermediate gear assembly (use 16 dia.drift and tap out with hammer if necessary).

To strip and assemble the intermediate gear assembly:

- Clean assembly thoroughly.
- Release lock washer lock, unscrew lock nut (57) and remove lock-washer (63).
- Extract intermediate gear (20) (including bearings) from shaft cover assembly (39).
- Remove bearing (47) and (68) from shaft cover assembly (39).
- Clean parts, inspect and replace worn parts.
- Reverse order for assembly.

To remove the front housing:

- Unscrew bolts (64/65) and washers. Extract front housing with special puller Tool No. 31830003 mounted on two M10 tapped holes provided in front housing.

To remove the primary gears and quill assembly:

- Remove circlip (76). Using puller Tool No. 41881842 with shaft plug Tool No. 31830002 extract gears (17, 18) and bearing (44). The quill assembly is removed in unison with the primary gears.
- Clean parts, inspect and replace if necessary. Use Drift No. 31881838 for assembly of gears (17, 18) and bearing (44).

To strip and assemble the quill assembly:

- Clean assembly and remove front and rear circlips (58).
- Place quill in press adaptor, Tool No. 3183004 vertically front end up and using press dolly Tool No. 31830012, remove quill gear (19), spacer (32) and front bearing (43). Remove key (36).
- Reverse quill position in press adaptor and remove remaining rear bearing (43).
- Clean all parts, inspect and replace worn parts.
- Reverse above order for assembly (use press Dolly Tool No. 31830012 in conjunction with press adaptor Tool No.3180004).

To remove the feed screw:

- Unscrew - LH thread.
- Clean and inspect for excessive wear, replace if worn.

To remove rear housing assembly:

- Release lock of lock washer (41), unscrew retaining nut (40) using tube spanner Tool No. 31830005.
- Extract handwheel (6) and remove key (34).
- Remove cover, bolts and washer (64/75) and extract rear cover (5).
- Loosen feed selector locating screw (61) and slide feed selector assembly from housing.

- Unscrew selector retaining bolt (29), remove plunger (28) and spring (33).
- Extract rear housing assembly with special puller Tool No. 31830006 mounted on two M10 tapped holes provided in the housing.
- (Spacer (30) will automatically be removed).

To strip and assemble rear housing assembly:

- Using press dolly Tool No. 31830008 tap bearings (42) from housing
- Clean all parts, inspect and replace worn parts.
- Reverse above order for assembly using same tooling.

To remove feed nut and feed selector assemblies:

- The feed selector / counter shaft assembly is now free and can be removed in unison with the feed nut assembly. The feed nut (7) is easily unseated from bearing location in main housing by tapping with rubber mallet from front end of housing.

To strip and assemble the feed nut assembly:

- Clean assembly and loosen three lock screws (74). Remove seal housing (10).
- Extract bearing (43) using puller (41881842) and adaptor dolly Tool No. 31830012.
- Place feed nut assembly vertically on press adaptor, (31830009) rear upwards, and press gears from feed nut using the same adaptor dolly Tool No. 31830012. Remove key (35).
- Clean parts, inspect and replace worn parts.
- Reverse above order for assembly.

To strip and assemble the feed selector assembly:

- Clean assembly and remove rear circlip (76).
- Lever bearing (44) from counter shaft.
- Remove spacer (55), feed gears (14, 15, 16) and remove key (23). Slide feed selector rack assembly from counter shaft (9).
- Unlock lock washer (52) and unscrew nut (51).
- Remove special washer (38) and thrust washer (54).
- Slide feed selector shaft (22) from feed selector rack (27).
- Remove thrust washer (54).
- The "Glacier" bushes and vesconite thrust washers (53) and (54) must be replaced if worn. Indentations in bushes must be filled with grease before assembly.
  NB: Bush (53) - rear to be pressed in position with press Dolly No. 2 - 31881841. Press Dolly No. 1 - 31881840 to be used for front bush.
- Reverse above order for assembly.

Main housing:

- Clean thoroughly and check bushes (21) for wear.

To assemble the drill:

- Reverse the disassembly order given above.

General Assembly

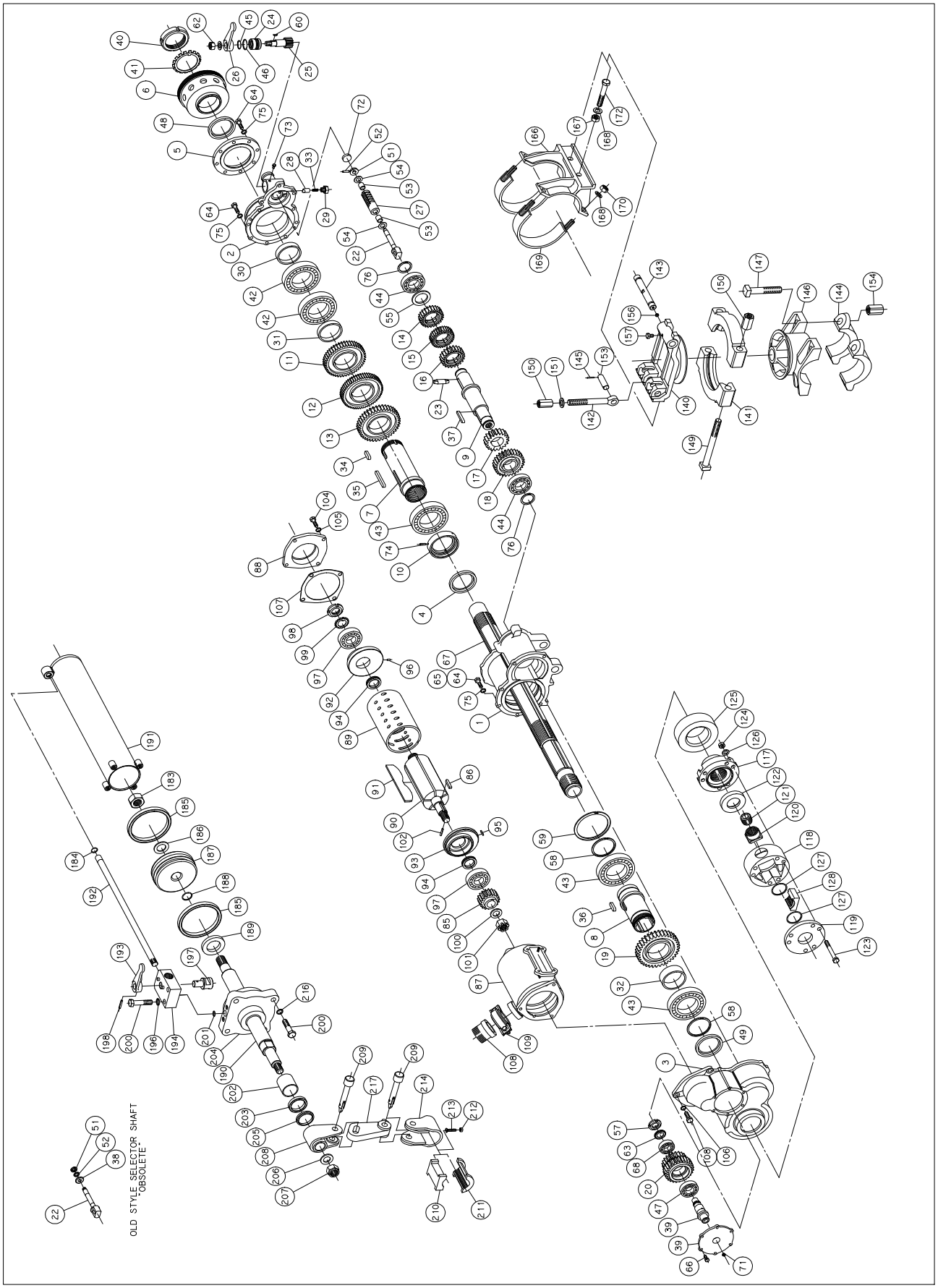

General Assembly Parts List and Numbers:

NB: Complete drill including rod puller and bar clamp is Part No. 31800005

Item	Part No.	Description	Quantity
	31800010	**Main Drive Housing Assembly**	
1	31801005	Main housing	1
2	31801010	Rear housing	1
3	31081015	Front housing	1
4	47016412	Oil seal	1
5	31801020	Cover rear housing	1
6	31801025	Hand wheel	1
7	31801030	Feed nut	1
8	31801035	Quill	1
9	31801041	Countershaft	1
10	31801045	Seal holder	1
11	31801050	Gear feed nut (fine = 200RPC)	1
12	31801055	Gear feed nut (med = 125RPC)	1
13	31801060	Gear feed nut (coarse = 100RPC)	1
14	31801065	Gear countershaft (fine = 200RPC)	1
15	31801070	Gear countershaft (med = 125RPC)	1
16	31801075	Gear countershaft (coarse = 100RPC)	1
17	31801080	Gear primary countershaft	1
18	31801086	Gear countershaft intermediate	1
19	31801090	Gear quill	1
20	31801095	Gear intermediate	1
21	31801100	Bush	2
22	31801105	Shaft feed selector	1
23	31801110	Key feed selector	1
24	31801115	Bush feed selector pinion	1
25	31801120	Pinion feed selector	1
26	31801125	Handle feed selector	1
27	31801130	Rack feed selector	1
28	31801135	Plunger feed selector	1
29	31801140	Screw feed selector plunger	1
30	31801145	Spacer feed nut hand wheel	1
31	31801150	Spacer feed nut gear	1
32	31801155	Spacer quill gear	1
33	41801160	Spring plunger	1
34	31801165	Key hand-wheel	1
35	31801170	Key feed nut gear	1
36	31801175	Key quill gear	1
37	31801181	Key intermediate gear	1
38	31801185	Washer special	1
39	31801189	Cover intermediate shaft assembly	1
40	31801195	Shaft nut – hand-wheel	1
41	47050031	Locking washer	1
42	46107215	Bearing	2
43	46106216	Bearing	3
44	46106208	Bearing	2
45	47014351	“O” ring	1
46	47014352	“O” ring	1
47	46106206	Bearing	1
48	47016409	Oil seal	1
49	47016410	Oil seal	1

General Assembly Parts List and Numbers (Continued):

Item	Part No.	Description	Quantity
51	47050025	Lock nut	1
52	47050026	Locking washer	1
53	47050027	Bush “glacier”	2
54	31881617	Thrust washer	2
55	31801205	Spacer - counter shaft	1
57	47050029	Locknut	1
58	47000075	Circlip external	2
59	47000130	Circlip internal	1
60	47006620	Key “woodruff”	1
61	31881124	Screw locking	1
62	47006420	Nut hex Gr 8.8	1
63	47050030	Lock washer	1
64	47021040	Bolt hex Gr 8.8	25
65	47021042	Bolt hex Gr 8.8	1
66	47021070	Screw hex set Gr 8.8	6
67	31801220	Feed screw	1
68	46105206	Bearing	1
71	47006598	Grease nipple M10x1	9
72	46726544	Plug - welsh cup type	1
73	41897435	Screw special	1
74	47021060	Screw socket set Gr 8.8	3
75	47006488	Washer spring	25
76	47000040	Circlip external	2

Air Motor Assembly

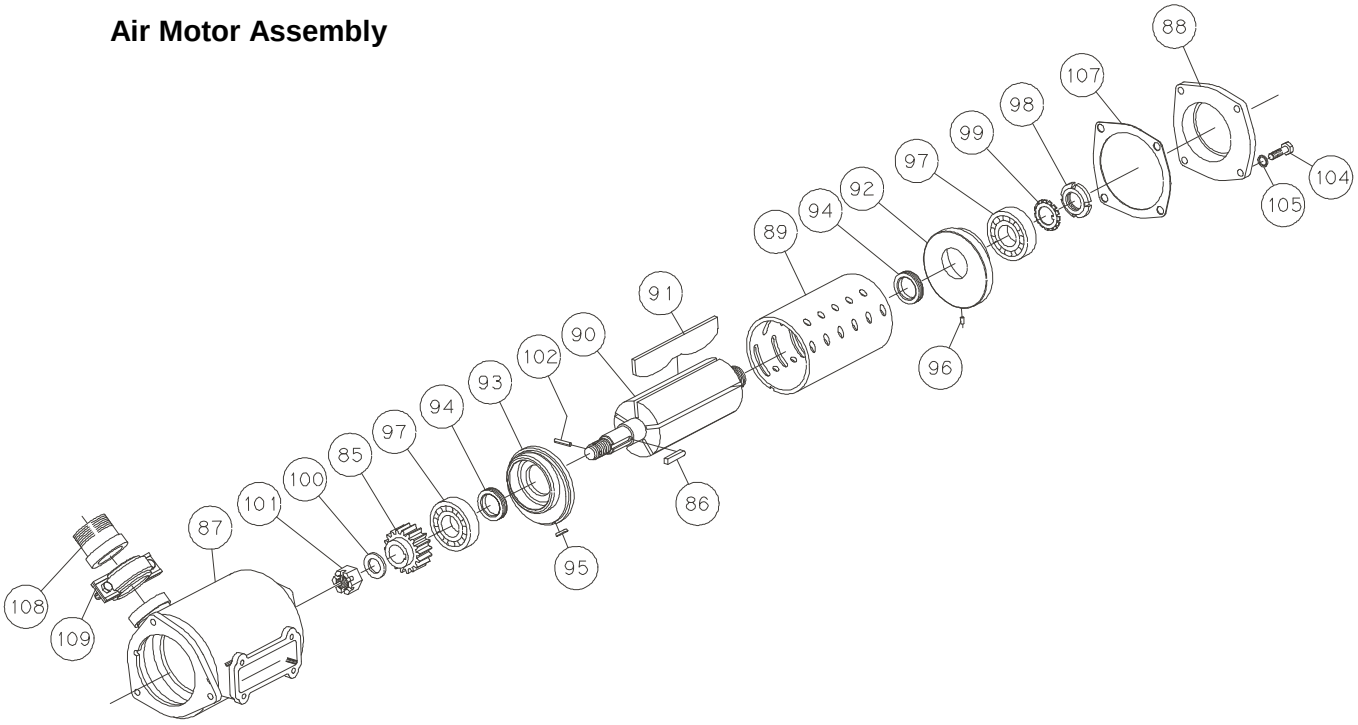

Item	Part No.	Description	Quantity
	31800015	**Air Motor Assembly**	
85	31801235	Gear motor	1
86	31801240	Key motor	1
87	31801245	Housing - air motor	1
88	31801250	Cover - air motor	1
89	31801255	Sleeve - air motor	1
90	31801260	Rotor	1
91	31897456	Vane	5
92	31801271	End plate - rear	1
93	31801276	End plate - front	1
94	31801280	Spacer - air motor rotor	2
95	31801285	Key - air motor housing	1
96	46106531	Cylindrical roller	1
97	46106313	Bearing	2
98	47006449	Lock nut	1
99	47006566	Locking washer	1
100	31801290	Washer flat	1
101	47006435	Castle nut	1
102	47006065	Split pin	1
103	47006145	Screw hex Gr 8.8	3
104	47021040	Bolt hex Gr 8.8	4
105	47006488	Washer spring	4
106	47006489	Washer spring	3
107	47015791	Gasket air motor cover	1
108	41881836	Adaptor 2ins BSP	1
109	41801330	Clamp Klambon	1

3 Jaw Chuck Assembly

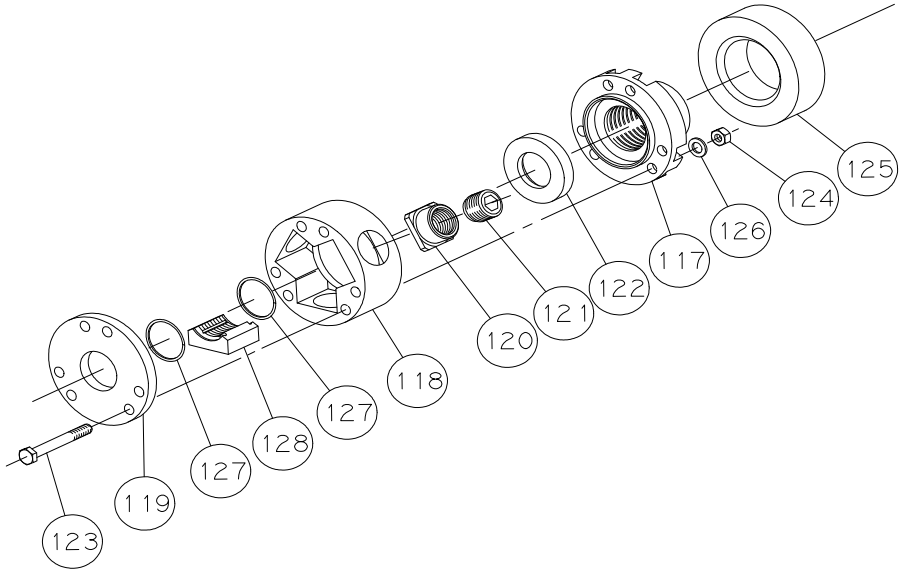

Item	Part No.	Description	Quantity
	32057100	**3 Jaw Chuck assembly**	
117	32040080	Back plate chuck	1
118	32090020	Chuck body	1
119	32090010	Front plate chuck	1
120	42040180	Sleeve	3
121	42040160	Dog screw	3
122	32090030	Front washer	1
123	47021050	Bolt hex Gr 8.8	6
124	47006414	Nut hex Gr 8.8	6
125	42040040	Rubber buffer	1
126	47006489	Washer spring	6
127	47019003	Chuck return spring	2
128	42090300	Chuck jaws “AQ”	1 set
129	31899434	Feed screw bushing “AQ”	1
130	46741000	Wrench hexagon 19 A/F	1

Options For Chuck and Rod Puller Jaws

Part No.	Description	Quantity
42040460	Chuck Jaws “EQ”	1 set
1801270	Feed screw bushing “EQ”	1
41801291	Chuck jaws “A”	1 set
42041500	Feed screw bushing “A”	1
41801290	Chuck jaws “E”	1 set
41899431	Feed screw bushing “E”	1
41881342	Chuck jaws “LTK46”	1 set
31881343	Feed screw bushing “LTK46”	1

Rod Puller Assembly
NB: For quarry applications please request to exclude the rod puller assembly

Item	Part No.	Description	Quantity
	31800030	**Rod puller assembly**	**1**
183	47006438	Nut hex nylock	1
184	47014029	"O" Ring	1
185	47016045	Seal	2
186	47006482	Washer flat	1
187	31805010	Piston	1
188	47014085	"O" Ring	1
189	41801325	Buffer	1
190	31805015	Piston shaft	1
191	41899098	Cylinder tube section	1
192	31805020	Tube	1
193	32045260	Handle	1
194	31805025	Valve body	1
196	47006492	Washer spring	2
197	32045340	Valve plug	1
198	47006561	Sellock pin	1
199	47014035	"O" Ring	1
200	47021080	Bolt hex Gr 8.8	6
201	47014075	"O" Ring	1
202	31801330	Bush	1
203	47016185	Seal	1
204	31805030	Front cover	1
205	47016055	Wiper ring	1
206	47021008	Washer flat	1
207	47006434	Nut hex nylock	1
208	32045180	Clevis	1
209	32045420	Pin	2
210	42045040	Jaw - "AQ"	1
211	41801282	Jaw bottom half "AQ"	1
212	47006407	Nut hex nylock	1
213	47021075	Screw CSK slotted	1
214	31805040	Jaw body	1
216	47006492	Washer spring	4
217	32045160	Cam	1

Rod Puller Jaw Options

Part No.	Description	Qty
42045080	**Rod puller Jaw top "EQ"**	**1**
41801280	Rod puller jaw bottom "EQ"	1
42045020	Rod puller jaw top "A"	1
41880428	Rod puller jaw bottom "A"	1
42045060	Rod puller jaw top "E"	1
41880430	Rod puller jaw bottom "E"	1
41881345	Rod puller jaw top "LTK46"	1
41881344	Rod puller jaw bottom "LTK46"	1

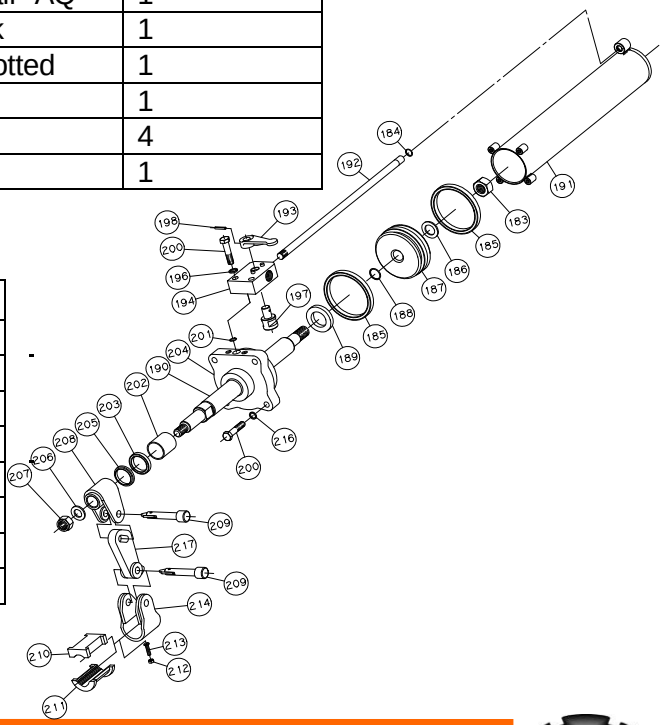

Rod puller clamp assembly

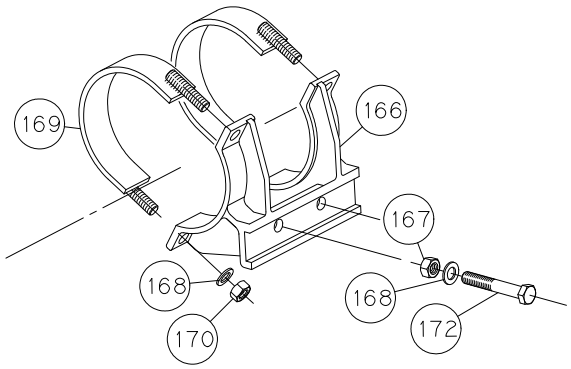

Item	Part No.	Description	Qty
	31800025	**Rod puller clamp assembly**	
166	31801320	Clamp rod puller	1
167	47006420	Nut hex Gr 8.8	2
168	47021002	Washer flat	2
169	32045680	Cap	2
170	47006421	Nut hex nylock	4
172	47006205	Screw hex	2

MetreEater maintenance tool kit (31881395)

Description	Tool No.
Press adaptor tool	32099810
Adaptor	31830009
Puller	31830003
Puller plug	31830002
Press adaptor	31830004
Press dolly	31830012
Tube spanner	31830005
Special puller	31830006
Dolly	31830008
Drift	32099878
Drift (c/shift)	31881838
Locking tool	31881839
Press dolly No. 1	31881840
Press dolly No. 2	31881841
Torque wrench	41881843

Bar clamp assembly

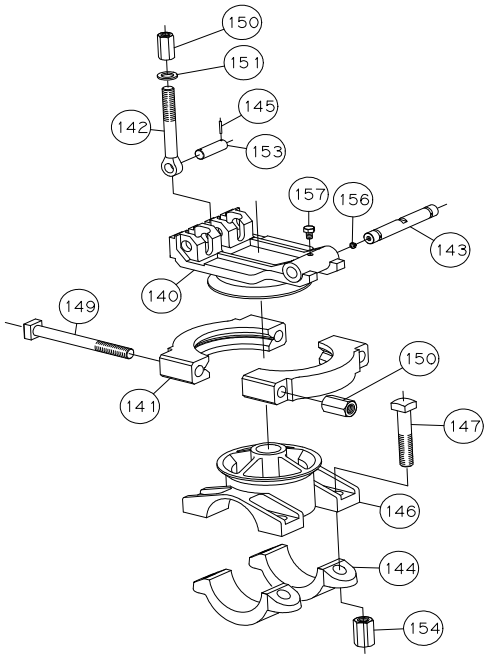

Item	Part No.	Description	Quantity
	31800020	**Bar clamp assembly**	
140	31801300	Swivel plate	1
141	31801305	Clamp swivel plate	2
142	31899079	Eye bolt	1
143	31801310	Hinge pin	1
144	32025440	Bar clamp cap 114mm	2
145	47006057	Split pin	2
146	31801315	Bar clamp 114mm	1
147	31899086	Bolt square head	4
149	31899087	Bolt	2
150	31899088	Long nut	2
151	42025450	Washer	1
152	31899082	Long nut	1
153	31899080	Eye bolt pin	1
154	31899089	Nut	4
156	47006598	Grease nipple M10 x 1	2
157	47006130	Set screw Gr 8.8	2

MetreEater Accessory Equipment

Airline Lubricator Hose Kit

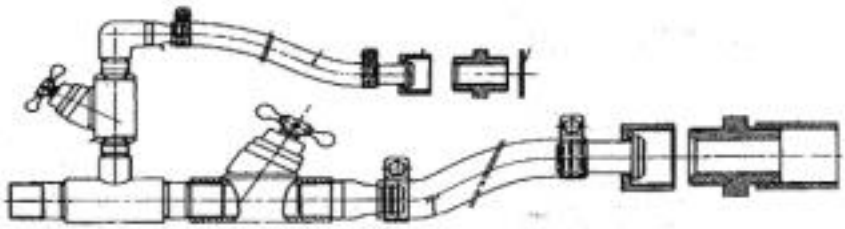

Part No.	Description	Quantity
41880542	Hose kit	1

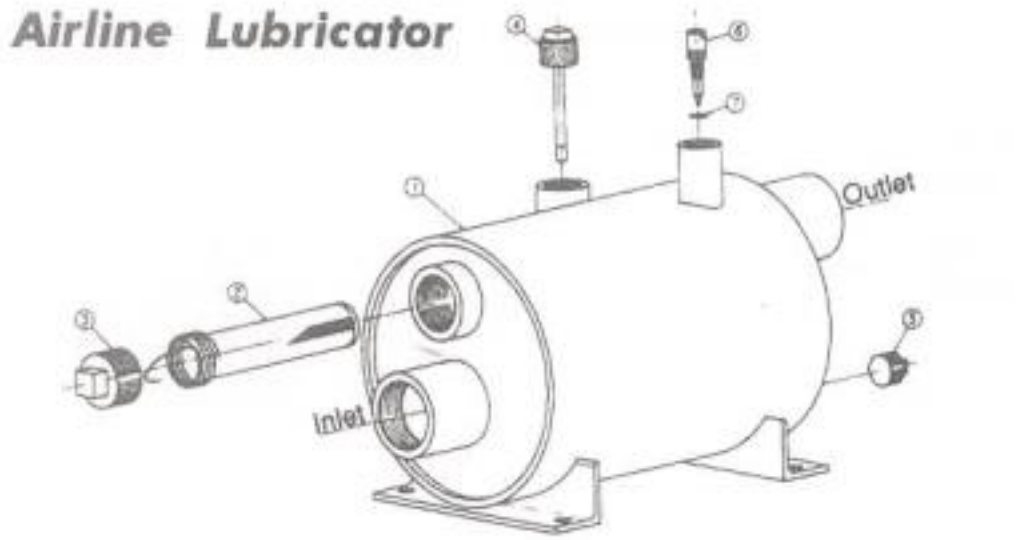

Item	Part No.	Description	Quantity
	32080291	**Lubricator assembly**	**1**
1	32080291	Lubricator housing	1
2	32080479	Strainer assembly	1
3	47400044	Solid plug	1
4	32080486	Dipstick	1
5	47400041	Solid plug	2
6	32080484	Needle	1
7	47014006	“O” ring	1

The airline lubricator offers the following features:

- A large 5 litre oil capacity to last the entire shift.
- An oil filter plug, complete with dip stick to check the oil level.
- Designed for an air flow of up to 750 CFM.
- Improved filtration of the air by means of an internal dirt trap for

larger particles, and a screen for smaller contamination.

- An adjustable oil venturi offering positive control of oil flow, preset at the factory.
- An oil drain plug and a plug offering access to the contamination chamber for cleaning. The air screen can be removed for cleaning without disconnecting hoses.
  Threaded connections for air hoses are 2" BSP.

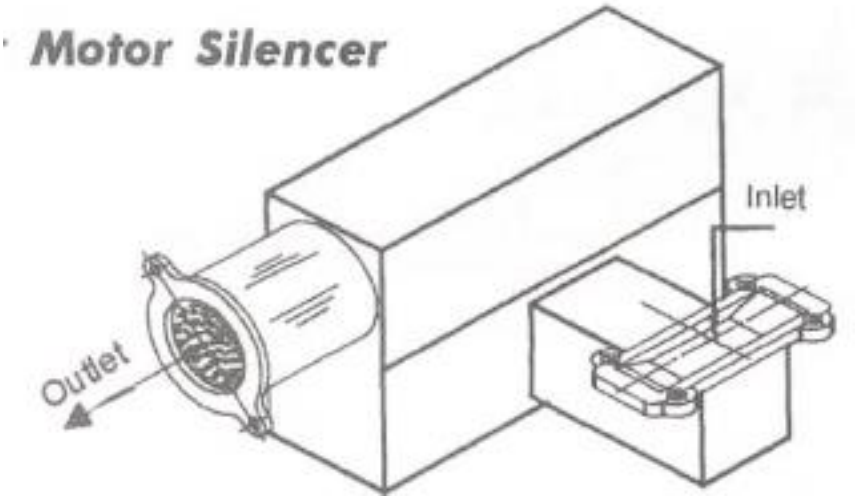

Part No.	Description	Quantity
31881754	Air motor silencer	1

Related drilling equipment for use with the MetreEater drill

Description	Part No.
A full range of diamond drill bits, reaming shells and core springs available to required size, and available to suit all rock types.	
4 ½" Telscopic Pole, 2.8m	U3-6-127
Double Jack Assembly	U3-6-130
AQ drill rod 1,5m	RODAQ15M
AQ Pin waterswivel (AQ Box can also be specified)	KWS597/AQ0

For any other drill consumables – please contact HUD.