

Touchmonitor User Guide

1519LM 15.6” LCD Desktop Touchmonitor

1919LM 18.5” LCD Desktop Touchmonitor

elo TOUCHSYSTEMS

TE connectivity TOUCH SOLUTIONS

Elo TouchSystems

15.6” and 18.5” LCD Touchmonitor

User Guide

Revision B

SW601463

Elo TouchSystems

1-800-ELOTOUCH

www.elotouch.com

Copyright © 2011 Tyco Electronics Corporation,
a TE Connectivity Ltd. Company. All Rights Reserved.

No part of this publication may be reproduced, transmitted, transcribed, stored in a retrieval system, or translated into any language or computer language, in any form or by any means, including, but not limited to, electronic, magnetic, optical, chemical, manual, or otherwise without prior written permission of Tyco Electronics.

Disclaimer

The information in this document is subject to change without notice. Tyco Electronics Corporation and its Afffiliates in the TE Touch Solutions business unit in the TE Connectivity Ltd. family of companies (collectively “TE”) makes no representations or warranties with respect to the contents herein, and specifically disclaims any implied warranties of merchantability or fitness for a particular purpose. TE reserves the right to revise this publication and to make changes from time to time in the content hereof without obligation of TE to notify any person of such revisions or changes.

Trademark Acknowledgments

AccuTouch, Elo (logo), Elo TouchSystems, IntelliTouch, TE Connectivity, TE connectivity (logo) and TE (logo) are trademarks of the TE Connectivity Ltd. family of companies. Windows is a trademark of the Microsoft group of companies. Other product names mentioned herein may be trademarks or registered trademarks of their respective companies. Tyco Electronics claims no interest in trademarks other than its own.



Warning

- Danger - Explosion hazard. Do not use in the presence of flammable anesthetics, and other flammable materials.
- To prevent fire or shock hazards, do not immerse the unit in water or expose it to rain or moisture.
- Do not use the unit with an extension cord receptacle or other outlets unless the prongs of the power cord can be fully inserted.
- RISK OF ELECTRICAL SHOCK - DO NOT OPEN. To reduce the risk of electrical shock, DO NOT remove the back of the equipment or open the enclosure. No user-serviceable parts are inside. Refer servicing to qualified field service engineers only.
- Uninsulated voltage within the unit may have sufficient magnitude to cause electrical shock. Avoid contact with any part inside the unit.
- This device complies with all applicable electromagnetic emission and immunity standards for medical device equipment. This device is designed to not cause harmful interference, and to accept any interference received, including interference that may cause undesired operation. The performance of this device is limited to the emission and immunity standards that have been applied. Other device which are not designed to withstand emission levels as specified in the medical device standards may be susceptible to interference from this device. Subjecting the device to conditions beyond the rated performance capabilities may result in emissions in excess of the standard. If it is determined that this device produces electromagnetic or other interference it must be disconnected from power until the cause of the problem has been determined and resolved. If it is determined that this device is functioning improperly due to electromagnetic and other interference it must be disconnected from power until the cause of the problem has been determined and resolved.
- Elo TouchSystems recommends that after its useful life (or after sustaining unrepairable damage), customers dispose of the touchmonitor and its power supply in an environmentally sound manner. Acceptable methods include the reuse of parts or whole products and the recycling of products, components, and materials. Please consult and obey national state, and local laws and ordinances governing the safe disposal of electronic equipment.
  Note that the fluorescent lamps inside this product contain mercury and must be recycled or disposed of according to local, state, or national laws. For more information, contact the Electronic Industries Alliance at www.eiae.org.

This product consists of devices that may contain mercury, which must be recycled or disposed of in accordance with local, state, or federal laws. (Within this system, the backlight lamps in the monitor display contain mercury.)

Caution

- Power cord is used as a disconnection device. To de-energize equipment, disconnect the power cord.
- This unit must follow the national requirement and local state laws to dispose unit.
- Before connecting the cables to your Elo touchmonitor, make sure all components are powered OFF.
  Only approved components complying with IEC60601-1 series can be connected to ET1519/ 1919LM in Patient Environment. The use of ACCESSORY equipment not complying with the equivalent safety requirements of this equipment may lead to a reduced safety of the resulting system. Consideration relating to the choices of accessory equipment should include:· Use of accessory in the patient environment.· Evidence that the safety certification of the accessory has been performed in accordance to the appropriate IEC 60601-1 and/or IEC 60601-1-1 harmonized national standard.
- For continued safety -
  - This unit only complies to the above standards if used with a medical grade power cord.
  -A medical grade power supply, such as the one specified, is required for use in a medical application.

Note:



- This symbol alerts the user to important information concerning the operation and maintenance of this unit, which should be read carefully to avoid problems.

- This symbol means DC Current.



- This symbol means ON/OFF stand-by switch.

CAUTION-Life Support

Care must be taken when this touchmonitor is a critical component of a life support system or device. In case of failure of this touchmonitor, appropriate redundant systems should be incorporated into the system or device to prevent injury to the user or patient.

The following should be an integral part of the safety design of a life support system or device using this touchmonitor for a critical function.

- An alternate interface or fail-safe must be available should the touchscreen fail to operate.
- The touchscreen interface must not be the only means of control of a critical function.
- An alternate video display should be incorporated into the safety design if used to monitor a critical function.
- The internal speakers of this touchscreen monitor must not be the sole method of warning of a critical function.

Critical functions are:

1. Life support devices or systems are devices or systems which, (a) are intended for surgical implant into the body, or (b) support or sustain life, or (c) whose failure to perform when properly used in accordance with instructions for use provided in the labeling, can be reasonably expected to result in significant injury to the user.
2. A critical component is any component of a life support device or system whose failure to perform can be reasonably expected to cause the failure of the life support device or system, or to affect its safety or effectiveness.

Definitions:

" PATIENT ENVIRONMENT"

any environment in which intentional or unintentional contact can occur between a PATIENT and parts of the ME EQUIPMENT or ME SYSTEM or between a PATIENT and other persons touching parts of the ME EQUIPMENT or ME SYSTEM.

Classification



UL 60601-1
CAN/CSA C22.2 No.601.1

E309041
07EG

With respect to electrical shock, fire in accordance with UL60601-1 and CAN/CSA C22.2 No. 60601-1

This monitor is a Class I (GROUNDED) DEVICE.

These displays are classified NO APPLIED PARTS EQUIPMENT.

Protection against harmful ingress of water:

INGRESS PROTECTION (IPX0)

This monitor shall be classified as ORDINARY EQUIPMENT, not intended or evaluated for use in the presence of flammable anesthetic mixture with air, oxygen, or nitrous oxide.

Mode of Operation: CONTINUOUS OPERATION.

Environmental conditions for transport and storage

Temp.	Operating	0 °C to 40 °C
	Storage / Transportation	-20 °C to +60 °C
Humidity (non-condensing)		
	Operating	30% to 70%
	Storage / Transportation	10% to 90%
Altitude	Operating	0 to 3,000m
	Storage / Transportation	0 to 40,000ft(12,192m) Equivalent to 1013-303 hP.A (14.7 to 4.4 psia)

For full Product Specifications refer to Appendix C

European Standards and Classifications

Standards: EN 60601-1-2: 2007

The EMC limits and test methods are referred to the following standards:

Emission:	Immunity
CISPR 11: 2009+A1:2010	IEC 61000-4-2: 2008
	IEC 61000-4-3: 2006+A1:2007+A2:2010
(Group 1, Class B)	IEC 61000-4-4: 2004 + A1:2010
	IEC 61000-4-5: 2005
EN55011: 1998+A1: 1999+	IEC 61000-4-6: 2008
A2: 2002, (Group 1, Class B)	IEC 61000-4-8: 2009
	IEC 61000-4-11: 2004
IEC 61000-3-2: 2005	
IEC 61000-3-3; 2008	

Guidance and manufacturer's declaration-electromagnetic immunity-for all EQUIPMENT AND SYSTEMS

Guidance and manufacturer's declaration-electromagnetic emissions		
The ET1519/1919LM is intended for use in the electromagnetic environment specified below. The customer or the user of the ET1519/1919LM should assure that it is used in such an environment.		
Emissions test	Compliance	Electromagnetic environment-guidelines
RF emissions CISPR 11	Group 1	The ET1519/1919LM uses RF energy only for its in ternal function. Therefore, its RF emissions are very low and are not likely to cause any interference in nearby electronic equipment.
RF emissions	Class B CISPR 11	The ET1519/1919LM is suitabe for use in all establishments, including domestic establishments and those directly connected to the public low-voltage power supply network that supplies buildings used for domestic purposes.
Harmonics emissions IEC 61000-3-2	Not applicable	
Voltage fluctuations/ flicker emissions IEC 61000-3-3	Complies	

Guidance and manufacturer's declaration-electromagnetic immunity-for all EQUIPMENT AND SYSTEMS

Guidance and manufacturer's declaration-electromagnetic immunity

The ET1519/1919LM is intended for use in the electromagnetic environment specified below. The customer or the user of the ET1519/1919LM should assure that it is used in such an environment.

Immunity test test level	IEC 60601	Compliance level	Electromagnetic environment-guidelines
Electrostatic discharge(ESD) IEC 61000-4-2	± 6 kV contact ± 8 kV air	± 6 kV contact ± 8 kV air	Floors should be wood, concrete or ceramic tile. If floors are covered with synthetic material, the relative humidity should be at least 30%.
Electrical Fast transient/burst IEC 61000-4-4	± 2 kV for power supply lines ± 1 kV for input/output lines	± 2 kV for power supply lines ± 1 kV for input/output lines	Mains power quality should be that of a typical commerical or hospital environment.
Surge IEC 61000-4-5	± 1 kV line(s) to line(s) ± 2 kV line(s) to earth	± 1 kV line(s) to line(s) ± 2 kV line(s) to earth	Mains power quality should be that of a typical commerical or hospital environment.
Voltage dips, short interruption and voltage variations on power supply input lines IEC 61000-4-11	<5% U_T (>95% dip in U_T) for 0.5 cycle 40% U_T (60% dip in U_T) for 5 cycles 70% U_T (30% dip in U_T) for 25 cycles <5% U_T (>95% dip in U_T) for 25 cycles	<5% U_T (>95% dip in U_T) for 0.5 cycle 40% U_T (60 % dip in U_T) for 5 cycles 70% U_T (30% dip in U_T) for 25 cycles <5% U_T (>95% dip in U_T) for 25 cycles	Mains power quality be that of a typical commerical or hospital environment. If the user of the ET1519/1919LM requires continued operation during power mains interruptions, it is recommended that the ET1519/1919LM be powered from an uninterruptible power supply or a battery.
Power frequency (50/60 Hz) magnetic field IEC 61000-4-8	3 A/m	3A/m	Power frequency magnetic fields should be at levels characteristic of a typical location in a typical commerical or hospital environment.

NOTE U_T is the a.c. mains voltage prior to application of the test level.

Guidance and manufacturer's declaration-electromagnetic immunity-for all EQUIPMENT AND SYSTEMS that are not LIFE-SUPPORTING

Guidance and manufacturer's declaration-electromagnetic immunity

The ET1519/1919LM is intended for use in the electromagnetic environment specified below. The user of the ET1519/1919LM should assure that it is used in such an environment.

Immunity test	IEC 60601 test level	Compliance level	Electromagnetic environment-guidelines
			Portable and mobile RF communications equipment should be used no closer to any part of the ET1519/1919LM, including cables, than the recommended separation distance calculated from the equation applicable to the frequency of the transmitter. Recommended separation distance
Conducted RF	3 Vrms	3 Vrms	$d=1.2\sqrt{P}$
Radiated RF IEC 61000-4-3	3 V/m 80 MHz to 2.5 GHz	3 Vrms	$d=1.2\sqrt{P}$ 80MHz to 800 MHz $d=2.3\sqrt{P}$ 800 NHz to 2.5GHz where P is the maximum output power rating of the transmitter in watts (W) according to the transmitter manufacturer and d is the recommended separation distance in metres(m) Filed strengths from fixed RF transmitters, as determined by an electromagnetic site survey [3], should be less than the compliance level in each frequency range[4]. Interference may occur in the vicinity of equipment marked with the following symbol: 

NOTE 1 At 80 MHz and 800 MHz, the higher frequency range applies.
NOTE 2 These guidelines may not apply in all situation. Electromagnetic propagation is affected by absorption and reflection from structures, objects and people.

[3.] Filed strengths from fixed transmitters, such as base stations for radio (cellular/cordless) telephones and land mobile radios, amateur radio, AM and FM radio broadcast and TV broadcast cannot be predicted theoretically with accuracy. To assess the electromagnetic environment due to fixed RF transmitters, an electromagnetic site survey should be considered. If the measured filed strength in the location in which the ET1519/1919LM is used exceeds the applicable RF compliance level above, the ET1519/1919LM should be observed to verify normal operation. If abnormal performance is observed, additional measures may be necessary, such as reorienting or relocating the ET1519/1919LM.[4.] Over the frequency range 150 kHz to 80 MHz, field strengths should be less than 3 Vrms.

Recommended separation distance between portable and mobile RF communications equipment and the ET1519/1919LM for all EQUIPMENT AND SYSTEMS that are not LIFE-SUPPORTING

Recommended separation distances between portable and mobile RF communications equipment and the ET1519/1919LM

The ET1519/1919LM is intended for use in an electromagnetic environment in which radiated RF disturbances are controlled. The customer or the user of the ET1519/1919LM can help prevent electromagnetic interference by maintaining a minimum distance between portable and mobile RF communications (equipment) and the ET1519/1919LM as recommended below according to the maximum output power of the communications equipment.

Rated maximum output power of transmitter W	Separation distance according to frequency of transmitter		
	150 kHz to 80 MHz $d=1.2\sqrt{P}$	80MHz to 800 MHz $d=1.2\sqrt{P}$	800 MHz to 2.5 GHz $d=2.3\sqrt{P}$
0.01	0.12	0.12	0.23
0.1	0.37	0.37	0.74
1	1.2	1.2	2.3
10	3.7	3.7	7.4
100	12	12	23

For transmitters rated at a maximum output power not listed above, the recommended separation distanced in metres(m) can be estimated using the equation applicable to the frequency of the transmitter, where P is the maximum output power rating of the transmitter in watts(W) according to the transmitter manufacturer.

NOTE 1 At 80 MHz and 800 MHz, the separation distance for the higher frequency range applies.
NOTE 2 These guidelines may not apply in all situations. Electromagnetic propagation is affected by absorption and reflection from structures, objects and people.

Table of Contents

Chapter 1

Introduction 1

Product Description 1
Precautions....1

Chapter 2

Installation and Setup 2

Unpacking Your Touchmonitor 2
Assembling the stand plate 4
Interface Connection 5
Speakers and Audio 5
Product Overview 6
Main Unit 6
Rear View 6
Mounting the display....7
Rear Mounting using the VESA Interface 8
VESA Mounting Options....8
Installing the Driver Software....9
Installing the Serial Touch Driver (not applicable to Acoustic Pulse Recognition monitor) 10
Installing the Serial Touch Driver for Windows 7, Windows Vista, Windows XP, Windows 2000, ME, Windows 98/95 and NT 4.0....11
Installing the Serial Touch Driver for Windows 3.1 and MS-DOS 11
Installing the USB Touch Driver 12
Installing the USB Touch Driver for Windows 7, Windows Vista, Windows XP, Windows 2000, ME, and Windows 98....12
Installing APR USB Touch Driver for Windows 7, Windows Vista and Windows XP 12

Chapter 3

Operation 13

About Touchmonitor Adjustments....13
Bottom Panel Controls....14
Controls and Adjustment 15
OSD Menu Functions 15
OSD Lock/Unlock 15
OSD Control Options....16
Preset Modes 17
Power Management System....18
Display Angle....18
IntelliTouch Plus Touch Technology 19
Projected-Capacitive Touch Technology 20
Gesture Support 20

Chapter 4

Troubleshooting 21

Solutions to Common Problems 21

Appendix A

Native Resolution 22

Appendix B

Touchmonitor Safety....24
Care and Handling of Your Touchmonitor 25

Appendix C

Touchmonitor Specifications....26
15.6" LCD Touchmonitor (ET1519LM) Dimensions....28
18.5" LCD Touchmonitor (ET1919LM) Dimensions....29

Regulatory Information 31

Warranty 34

CHAPTER

1

INTRODUCTION

Product Description

Your new 1519/1919LM touchmonitor combines the reliable performance of touch technology with the latest advances in LCD display design. This combination of features creates a natural flow of information between a user and your touchmonitor.

This LCD monitor incorporates a 15.6" or 18.5" color active matrix thin-film-transistor (TFT) liquid crystal display to provide high quality display performance. A maximum resolution of WXGA 1366 x 768 is well-suited for displaying both graphics and images. Other features that enhance the performance of this LCD touchmonitor are Plug & Play compatibility, OSD (On Screen Display) controls, and Elo's unique zero-bezel Acoustic Pulse Recognition (APR), AT, IT touchscreen. In addition, the 1519/1919LM is easily configurable for either portrait or landscape orientation.

Precautions

Follow all warnings, precautions and maintenance procedure as recommended in this user's manual to maximize the life of the touch monitor. See Appendix B for more information on touchmonitor safety.

CHAPTER

2

INSTALLATION AND SETUP

This chapter discusses how to install the 1519/1919LM LCD touchmonitor and the driver software.

Unpacking Your Touchmonitor

Check that the following items are present and in good condition:

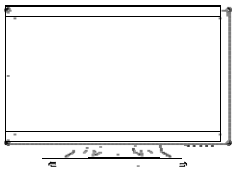

LCD monitor



VGA cable

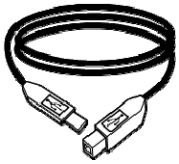

USB cable



Audio cable

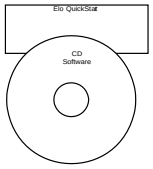

CD and Quick Install Guide

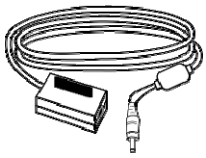

Power Brick

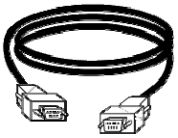

Serial Cable
(not included with APR model)

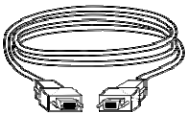

DVI cable

Power cable for North America models

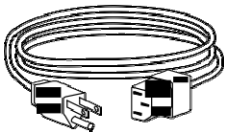

USA/UL Power cable

Power cable for European models

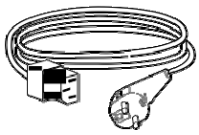

Europe/VDE power cable

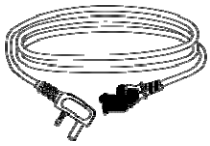

UK power cable

Power cable for Japan models

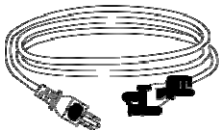

Japanese/PSE power cable

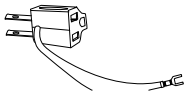

Adapter/Terminal

Power cable for Worldwide models

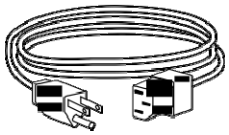

USA/UL Power cable

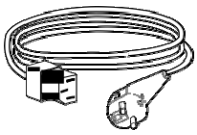

Europe/VDE power cable

Assembling the stand plate

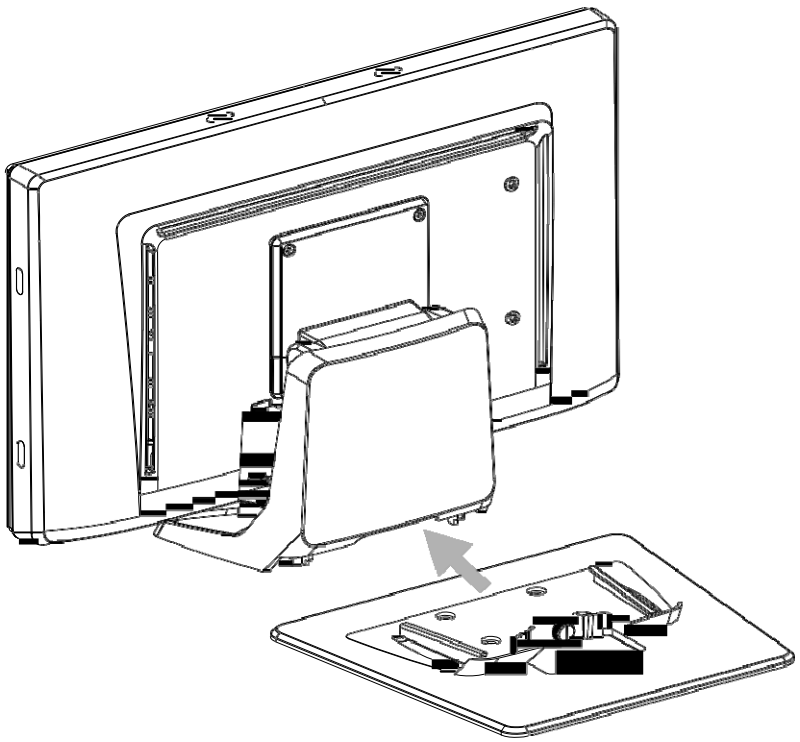

Pushing the stand plate toward the stand untill it is tight, then fasten the stand plate using captive screw.

Interface Connection

Note: Before connecting the cables to your touchmonitor and PC, be sure that the computer and touchmonitor are turned off.

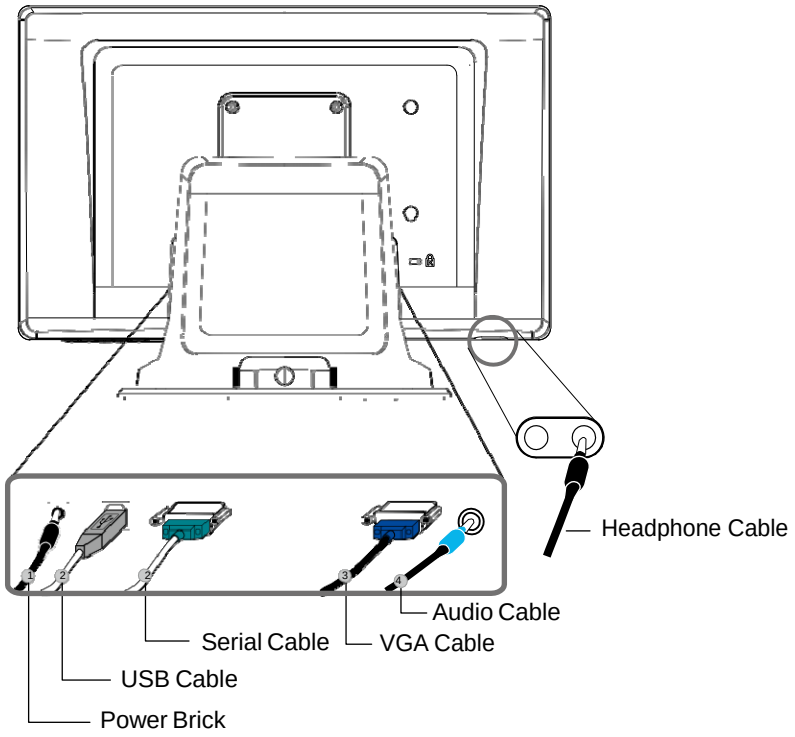

1. Connect DC cable of the power brick to the monitor and the other end through AC power cable to the AC outlet.
2. Connect one end of either the touchscreen serial (RS232) cable or the touch screen USB cable (but not both) to the rear side of the computer and the other end to the LCD monitor. Tighten by turning the two thumb screws clockwise to ensure proper grounding.
3. Connect one end of the VGA cable or DVI cable to the rear side of computer and the other to the LCD monitor. Tighten by turning the two thumb screws clockwise to ensure proper grounding.
4. Connect one end of the audio cable to the rear side of computer and the other to the LCD monitor.
5. Facing the monitor, press the power button located on the underside of the botom-right corner of the monitor.

Speakers and Audio

The touchmonitor includes two built-in speakers. To use the speakers, plug in the audio cable to the Audio Input port and connect the other end to your computer.
To use headphones, plug in the headphones to the Audio Output port shown above. When headphones are connected, the sound plays through the headphones only.
The volume and muting of the sound can be adjusted by using the “Audio” choice from the On-Screen Display (OSD) Control panel menu as described on page 3-14.

Product Overview

Main Unit

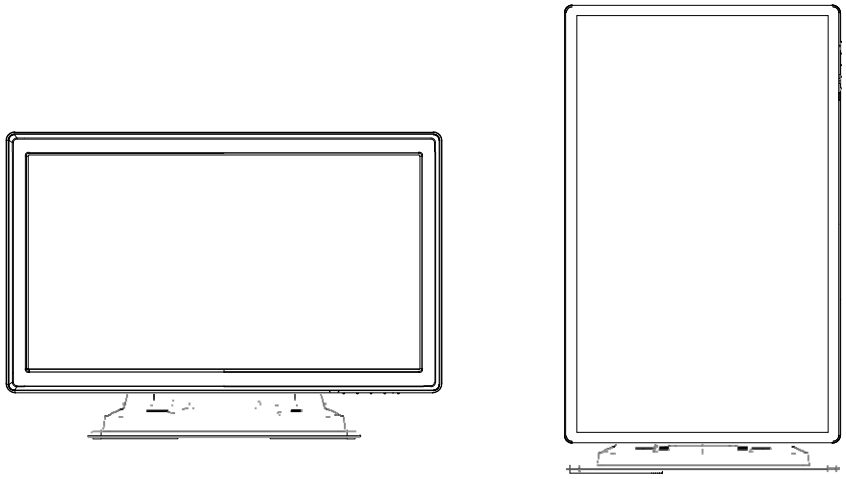

Rear View

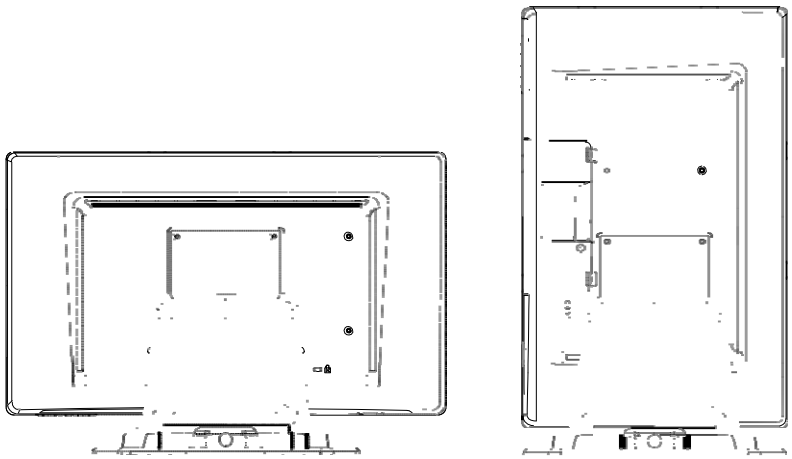

Kensington™ Lock

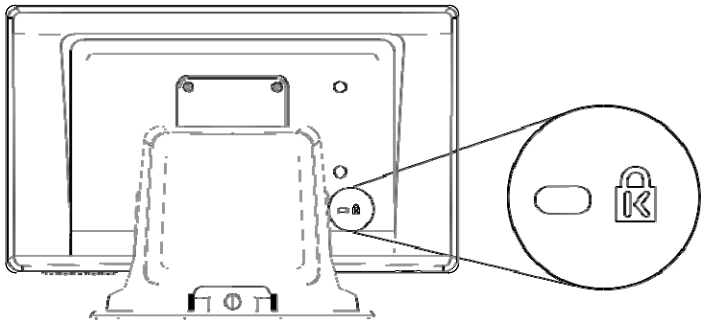

The Kensington™ lock is a security device that prevents theft. To find out more about this security device, go to http://www.kensington.com.

Mounting the Display

Your medically certified touchscreen display conforms to the VESA Flat Panel Monitor Physical Mounting Interface (FPMPMI) standard. The FPMPMI standard defines a physical mounting interface for flat panel displays. Your display conforms to the corresponding standards for flat panel display mounting devices, such as for walls and table arms. The VESA mounting interface is located on the back of your touchscreen display and is pre-connected to the pedestal.

ET1919LM

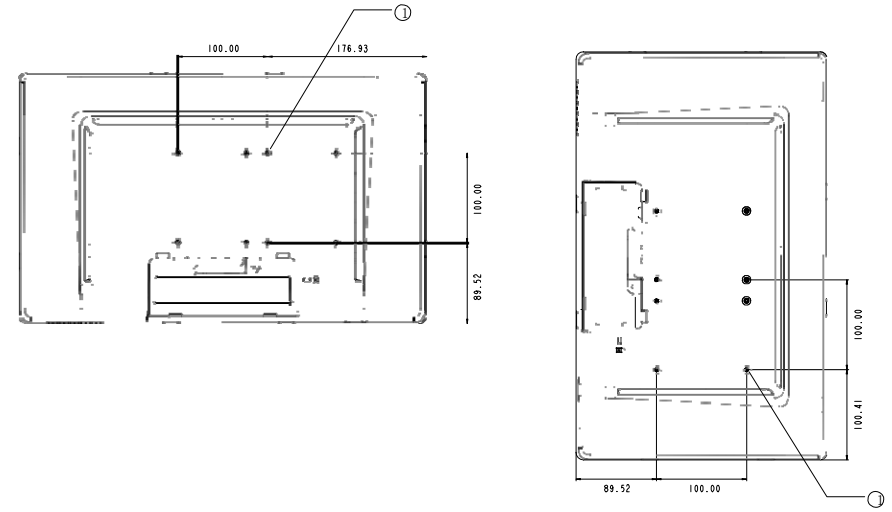

ET1519LM

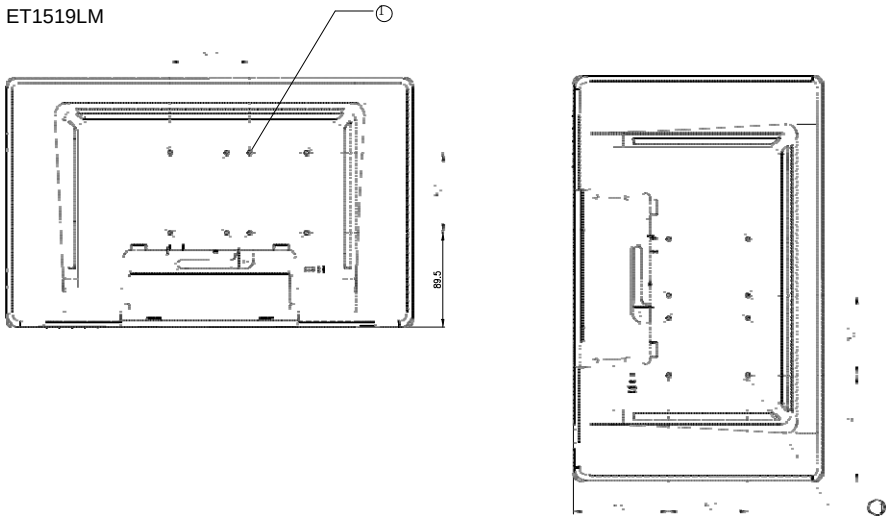

Figure 2-1 : VESA mounting interface location, pedestal removed

① Screw location, M4 Phillips, x4

Note: You will need a Phillips screwdriver to mount the display or remove the pedestal.

Rear Mounting Using the VESA Interface

1 If the display is already connected to a pedestal, remove the four screws that connect the pedestal to the display (refer to Figure2-1 , item ①). Separate the pedestal from the display.
2 Reinstall the four screws into the VESA interface mount. Ensure that the monitor is positioned with the correct side up.
3 Mount the monitor to the wall according to the template shown in Figure 2-2. Route the cables through the cable access opening.

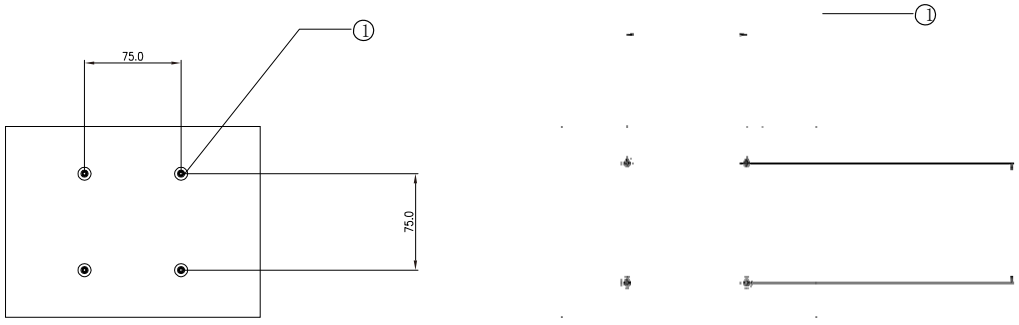

ET1519LM ET1919LM

Figure 2-2: Rear mount template (not to scale)

VESA Mounting Options

The following companies provide VESA mounting devices compatible with your touchscreen monitor:

GCX
800-228-2555
707-773-1100
www.gcx.com

Ergotron
800-888-8458
651-681-7600
www.ergotron.com

Innovative Office Products
800-524-2744
610-253-9554
www.innov-office-prod.com

MRI
800-688-2414
www.mediarecovery.com

Installing the Driver Software

Elo TouchSystems provides driver software that allows your touchmonitor to work with your computer. Drivers are located on the enclosed CD-ROM for the following operating systems:

- Windows 7
- Windows Vista
- Windows XP
- Windows 2000
- Windows Me
- Windows 98
- Windows 95
- Windows NT 4.0
- Windows 3.1
- MS-DOS

Additional drivers and driver information for other operating systems are available on the Elo TouchSystems web site at www.elotouch.com.

The Elo touchmonitor is plug-and-play compliant. Information on the video capabilities of your touchmonitor is sent to your video display adapter when Windows starts. If Windows detects your touchmonitor, follow the instructions on the screen to install a generic plug-and-play monitor.

Refer to the following appropriate section for driver installation instructions.

Depending upon whether you connected the serial communication cable or the USB communication cable, only the serial driver or the USB driver should be installed.

Installing the Serial Touch Driver (not applicable to Acoustic Pulse Recognition and Projected-Capacitive monitor)

Installing the Serial Touch Driver for Windows 7, Windows Vista, Windows XP, Windows 2000, ME, 98/95 and NT4.0.

NOTE: For Windows 2000 and NT4.0 you must have administrator access rights to install the driver. Make sure the serial connector (RS232) is plugged into the monitor and an open com port on the PC.

1. Insert the Elo CD-ROM in your computer's CD-ROM drive.
2. If the AutoStart feature for your CD-ROM drive is active, the system automatically detects the CD and starts the setup program.
3. Follow the directions on the screen to complete the driver setup for your version of Windows.
4. If the AutoStart feature is not active:
5. Click **Start > Run**.
6. Click the **Browse** button to locate the EloCd.exe program on the CD-ROM.
7. Click **Open**, then **OK** to run EloCd.exe.
8. Follow the directions on the screen to complete the driver setup for your version of Windows.

Installing the Serial Touch Driver for Windows 3.1 and MS-DOS

You must have a DOS mouse driver (MOUSE.COM) installed for your mouse if you wish to continue using your mouse along with your touchmonitor in DOS.

To install Windows 3.x and MS-DOS touch driver from Windows 98/95, follow the directions below:

1 Insert the CD-ROM in your computer's CD-ROM drive.
2 From DOS, type d: and press the **Enter** key to select the CD-ROM (your CD-ROM drive may be mapped to a different drive letter).
3 Type cd\elodos_w31 to change to the correct directory.
4 Type **Install** and press **Enter** to start the installation.
5 Calculate the touchscreen.

Installing the USB Touch Driver

Installing the USB Touch Driver for Windows 7, Windows Vista, Windows XP, Windows 2000, ME and Windows 98.

1 Insert the Elo CD-ROM in your computer's CD-ROM drive.
If Windows 2000 or Windows 98 starts the Add New Hardware Wizard, do the following:
2 Choose **Next**. Select "Search for the best driver for your device (Recommended)" and choose **Next**.
3 When a list of search locations is displayed, place a checkmark on "Specify a location" and use **Browse** to select the \EloUSB directory on the Elo CD-ROM.
4 Choose **Next**. Once the Elo USB touchscreen driver has been detected, choose **Next** again.
5 You will see several files being copied. Insert your Windows 98 cd if prompted. Choose **Finish**.

If Windows 2000 or Windows 98 does not start the Add New Hardware Wizard, do the following:

NOTE: For Windows 2000 you must have administrator access rights to install the driver.

1 Insert the Elo CD-ROM in your computer's CD-ROM drive. If the AutoStart feature for your CD-ROM drive is active, the system automatically detects the CD and starts the setup program.
2 Follow the directions on the screen to complete the driver setup for your version of Windows.

If the AutoStart feature is not active:
1 Click **Start** > **Run**.
2 Click the **Browse** button to locate the EloCd.exe program on the CD-ROM.
3 Click **Open**, then **OK** to run EloCd.exe.
4 Follow the directions on the screen to complete the driver setup for your version of Windows.

Installing APR USB Touch Driver for Windows 7, Windows Vista and Windows XP

Insert the Elo APR CD-ROM in your computer's CD-ROM driver.
Follow the directions on the screen to complete the APR 3.1 driver setup for your version of Windows. Do not plug USB cable until software is fully loaded. When finished, plug USB cable and alignment data is transferred.

Note: For the latest driver, go to elotouch.com and download it from the driver download section.

CHAPTER

3

OPERATION

About Touchmonitor Adjustments

Your touchmonitor will not likely require adjustment. However, variations in video output and application may require adjustments to the touchmonitor to optimize the quality of the display.

For best performance, the input video resolution should be the touchmonitors native resolution, 1366 x 768. Use the Display control panel in Windows to choose 1366 x 768 resolution.

Operating in other resolutions will degrade video performance. For further information, please refer to Appendix A.

All adjustments made to the controls are automatically memorized. This feature saves you from having to reset the choices every time the touchmonitor is unplugged or powered off and on. If there is a power failure, the touchmonitor settings will not default to the factory specifications.

Bottom Panel Controls

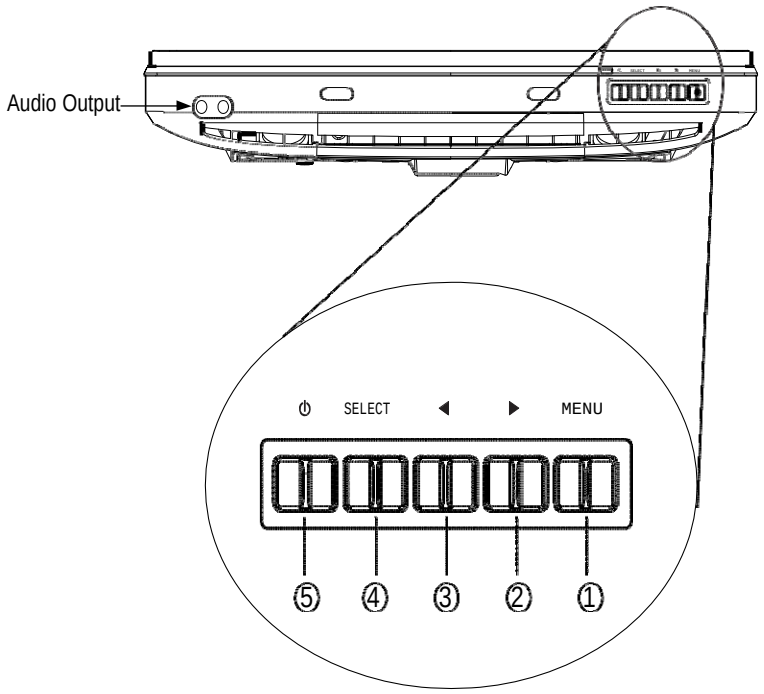

Control	Function
1 **Menu/Exit**	Display/Exits the OSD menus.
2 ►	1. Enter Luminance of the OSD. 2. Increase value of the adjustment item. 3. Move OSD selection upward.
3 ◄	1. Enter Audio of the OSD. 2. Decrease value of the adjustment item. 3. Move OSD selection downward .
4 **Select**	1. Video source select. Options are: VGA Priority, DVI Priority. Default: DVI Priority 2. Select the adjustment item from the OSD menu.
5 **Power Switch**	Switch the power of the monitor.

On Screen Display (OSD) Menu Functions

To Display and Select the OSD Functions:

1. Press the Menu key to activate the OSD menu.
2. Use ► or ◄ to move upward or downward through the menu. Press the "Select" key, execute the function or enter the sub-menu.
3. To quit the OSD screen at any time during the operation, press the Menu key. If no keys are pressed for a short time period, the OSD automatically disappears.

NOTE: The OSD screen will disappear if no input activities are detected for at a minimum of 15 seconds or depending on how long the timer is set via the OSD menu. The time ranges from 5 seconds to 60 seconds.

On Screen Display (OSD) Lock/Unlock

The OSD feature can be locked and unlocked. The monitor is shipped in the unlocked position.

To lock the OSD:

1. Press the Menu button and ► button simultaneously until a window appears displaying "OSD Unlocked". Continue to hold the buttons until the window toggles to "OSD Locked".
2. To unlock the the Power Locking Feature, repeat the procedure until the "OSD Unlocked" is displayed.

To lock the power:

1. Press the menu and ◄ button simultaneously until a window displaying "Power unlocked" appears. Continue to hold the buttons until the "Power Locked".
2. To unlock the power repeat the procedure until the "Power Unlocked" is displayed.

On Screen Display(OSD) Control Options

Control	Description
Auto-Adjust	Select "Auto-Adjust" to enable this function. The Auto-Adjust will automatically adjust V-Position, H-Position, Clock and Phase.
Luminance	
·Brightness	Increases or decreases brightness
·Contrast	Increases or decreases contrast
Image Setting	
·H-Position	Moves the screen left or right
·V-Position	Moves the screen up or down
·Clock	The dot clock is fine-adjusted after auto adjust.
·Phase	Increases or decreases the video noise of the image after an auto adjustment is made.
Color	Press ▶or◀ to select 9300, 6500, 5500, 7500 and USER. Only when selecting USER can you make adjustments to the R/G/B content values.
Audio	
·Mute	Enable/Disable audio mute.
·Volume	Increase or decrease audio volume.
OSD	
·OSD Rotation	Adjusts the direction of OSD for Landscape and Portrait mode.
·OSD Timeout	Adjusts the amount of time of the OSD menu is displayed.
·Language	Select from English, French, Italian, German, Spanish, Japanese, Traditional Chinese and Simplified Chinese.
Recall	Returns the monitor to its default settings.
Miscellaneous	
·Aspect ratio	
··Fill screen	No matter what LCD aspect ratio, scales video so it fills the LCD with no over or under scan. Change video aspect ratio.
··Fill to Aspect ratio	Sets the height of video equal to the height of LCD. Video Aspect ratio is preserved. Black bars on left and right side of LCD screen may appear.
·Sharpness	Adjusts sharpness of video signals on a scale from 1 to 5 using 4 discrete steps.
Exit	Exits the OSD display.

Preset Modes

To reduce the need for adjustment for different modes, the monitor has default setting modes that are most commonly used as given in the table below. If any of these display modes are detected, the monitor automatically adjusts the picture size and centering. When none of the modes are matched, the user can store their preferred modes in the user modes. The monitor is capable of storing up to 7 user modes. The only condition to store as a user mode is the new display information which must have 1 KHz difference for horizontal frequency or 1 Hz for vertical frequency or the sync signal polarities are different from the default modes.

Resolution	Vertical Frequency
720 x 350	70Hz (may not display at full screen)
720 x 400	70Hz
640 x 480	60 / 72 / 75Hz
800 x 600	56 / 60 / 72 / 75Hz
832 x 624	75Hz
1024 x 768	60 / 70 / 75Hz
1280 x 800	60Hz
1280 x 960	60Hz
1280 x 1024	60 / 75Hz
1360 x 768	60Hz
1366 x 768	60Hz
1440 x 900	60Hz
1600 x 1200	60Hz
1680 x 1050	60Hz

Power Management System

Mode	Power Consumption (12VDC input)
On	<42W
Sleep	<2W
Off	<1W

It is recommended to switch the monitor off when it is not in use for a long period of time.

NOTE: Complies to VESA Power Management (DPM) standards. To activate the monitor, press any key on the keyboard or move the mouse or touch the touchscreen. In order for the touchscreen to bring the monitor from the DPM system, the touchscreen function must be fully operational.

Display Angle

For viewing clarity, the LCD can tilt forward (up to -5 degrees) or backward (up to 90 degrees.)

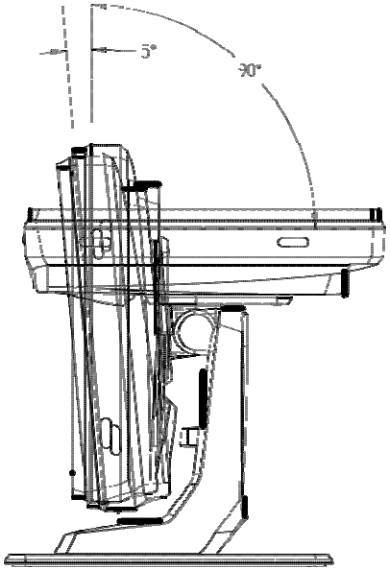

CAUTION In order to protect the LCD, be sure to hold the base when adjusting the LCD and do **not** touch the screen.

IntelliTouch Plus Touch Technology

When connected to Windows 7 computers, the touchmonitor can report 2 simultaneous touches.

The IntelliTouch Plus touchscreen can be re-calibrated to your displayed video image, if needed, through the Calibration function in the Elo driver control panel.

The IntelliTouch Plus driver will only support multiple monitor if they are all using the IntelliTouch Plus touch technology.
To use multiple IntelliTouch Plus monitors, double click on the EloConfig desktop shortcut to open up the Elo Touchscreen Configuration screen.



Select “Match Touch to Display…” to calibrate multiple monitors.

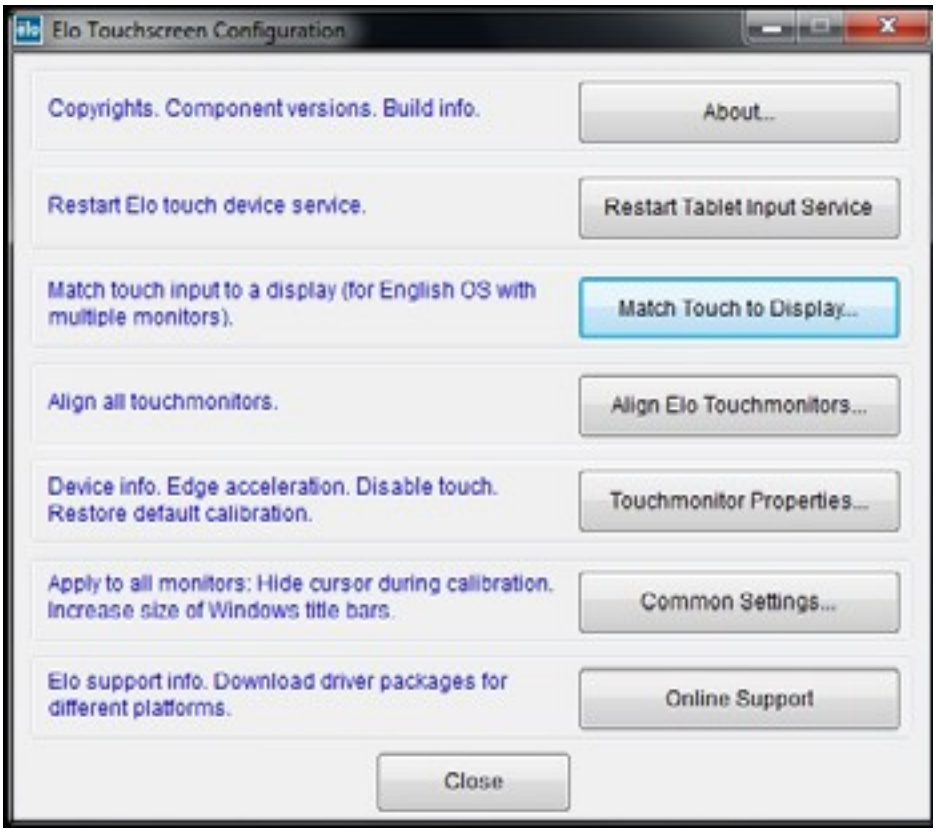

Projected-Capacitive Touch Technology

When connected to Windows 7 computers, the touchmonitor can report 2 simultaneous touches. When connected to Windows XP computers, the touchmonitor reports single touches.

No additional drivers are required for this technology to work, it uses Windows HID drivers. No calibration is required for this technology.

Gesture Support

The IntelliTouch Plus and Projected-Capacitive touch technologies enable several gestures that support single and multiple contacts. Refer to the Microsoft Website http://msdn.microsoft.com/en-us/library/dd940543 on the various gestures that are supported in Windows 7.

CHAPTER

4

TROUBLESHOOTING

If you are experiencing trouble with your touchmonitor, refer to the following table. If the problem persists, please contact your local dealer or the Elo service center.

Solutions to Common Problems

Problem	Suggestion(s)
The monitor does not respond when turning on the system.	1. Check that the monitor's Power Switch is on. 2. Turn off the power and check the monitor's DC power cord and signal cable for proper connection.
Characters on the screen are dim	Refer to the About Touchmonitor Adjustments section to adjust the brightness.
The video is blank	1. During operation, the monitor screen may automatically turn off as a result of the Power Saving feature. Press any key to see if the screen reappears. 2. Refer to the About Touchmonitor Adjustments section to adjust the brightness.
Screen flashes when initialized	Turn the monitor off then turn it on again.
"Out of Range" display	Reconfigure the resolution of your computer to make one of the monitor's supported video mode (see Appendix C).See Appendix A for more information on resolution.
Touch doesn't work	Make sure the touch cable is securely attached at both ends.

A

NATIVE RESOLUTION

The native resolution of a monitor is the resolution level at which the LCD panel is designed to perform best. For the LCD touchmonitor, the native resolution is 1366 x 768 for the 15.6 inch and 18.5 inch size. In almost all cases, screen images look best when viewed at their native resolution. The resolution setting of a monitor can be lowered but not increased.

Input Video	1519LM/1919LM monitor
640 x 480 (VGA)	Transforms input format to 1366 x 768
800 x 600 (SVGA)	Transforms input format to 1366 x 768
1024 x 768 (SVGA)	Transforms input format to 1366 x 768
1366 x 768 (WXGA)	Displays in Native Resolution
1360 x 768	Displays with scaling

The native resolution of an LCD is the actual number of pixels horizontally in the LCD by the number of pixels vertically in the LCD. LCD resolution is usually represented by the following symbols:

VGA	**640 x 480**
SVGA	**800 x 600**
XGA	**1024 x 768**
SXGA	**1280 x 1024**
UXGA	**1600 x 1200**
WXGA, avg	**1280 x 800**
SXGA-	**1280 x 960**
WXGA, max	**1366 x 768**
WXGA+	**1440 x 900**
WSXGA+	**1680 x 1050**

As an example, a SVGA resolution LCD panel has 800 pixels horizontally by 600 pixels vertically. Input video is also represented by the same terms. XGA input video has a format of 1024 pixels horizontally by 768 pixels vertically. When the input pixels contained in the video input format match the native resolution of the panel, there is a one to one correspondence of mapping of input video pixels to LCD pixels. As an example, the pixel in column 45 and row 26 of the input video is in column 45 and row 26 of the LCD. For the case when the input video is at a lower resolution than the native resolution of the LCD, the direct correspondence between the video pixels and the LCD pixels is lost. The LCD controller can compute the correspondence between video pixels and LCD pixels using algorithms contained on its controller. The accuracy of the algorithms determines the fidelity of conversion of video pixels to LCD pixels. Poor fidelity conversion can result in artifacts in the LCD displayed image such as varying width characters.

B

TOUCHMONITOR SAFETY

This manual contains information that is important for the proper setup and maintenance of your touchmonitor. Before setting up and powering on your new touchmonitor, read through this manual, especially Chapter 2 (Installation), and Chapter 3 (Operation).

1 To reduce the risk of electric shock, follow all safety notices and never open the touchmonitor case.
2 Turn off the product before cleaning.
3 The slots located on the sides and top of the touchmonitor case are for ventilation. Do not block or insert anything inside the ventilation slots.
4 It is important that your touchmonitor remains dry. Do not pour liquid into or onto your touchmonitor. If your touchmonitor becomes wet do not attempt to repair it yourself.

Care and Handling of Your Touchmonitor

The following tips will help keep your touchmonitor functioning at the optimal level.

- To avoid risk of electric shock, do not disassemble the brick power supply or display unit cabinet. The unit is not user serviceable. Remember to unplug the display unit from the power outlet before cleaning.
- Do not use alcohol (methyl, ethyl or isopropyl) or any strong dissolvent. Do not use thinner or benzene, abrasive cleaners or compressed air.
- To clean the display unit cabinet, use a cloth lightly dampened with a mild detergent.
- Avoid getting liquids inside your touchmonitor. If liquid does get inside, have a qualified service technician check it before you power it on again.
- Do not wipe the screen with a cloth or sponge that could scratch the surface.
- To clean the touchscreen, use window or glass cleaner. Put the cleaner on a clean cloth and wipe the touchscreen. Never apply the cleaner directly to the touchscreen.



Warning

This product consists of devices that may contain mercury, which must be recycled or disposed of in accordance with local, state, or federal laws. (Within this system, the backlight lamps in the monitor display contain mercury.)



Waste Electrical and Electronic Equipment (WEEE) Directive

In the European Union, this label indicates that this product should not be disposed of with household waste. It should be deposited at an appropriate facility to enable recovery and recycling.

APPENDIX

C

TECHNICAL SPECIFICATIONS

Touchmonitor Specifications

Model		**1919LM**
LCD Display		18.5" TFT Active Matrix Panel
Display Size		409.8 (H) x 230.4 (V) mm
Pixel Pitch		0.3 (H) x 0.3 (V) mm
Native Resolution		1366 x 768
Display Mode		720 x 350 (70Hz) - (may not display at full screen) 720 x 400 (70Hz) 640 x 480 (60 / 72 / 75Hz) 800 x 600 (56 / 60 / 72 / 75Hz) 832 x 624 (75Hz) 1024 x 768 (60 / 70 / 75Hz) 1280 x 800 (60Hz) 1280 x 960 (60Hz) 1280 x 1024 (60 / 75Hz) 1360 x 768 (60Hz) 1366 x 768 (60Hz) 1440 x 900 (60Hz) 1600 x 1200 (60Hz) 1680 x 1050 (60Hz)
Contrast Ratio		1000 : 1 (typical)
Brightness		LCD Monitor: typical 300 Cd/m^2 ; Min 240 Cd/m^2 AccuTouch: typical 240 Cd/m^2 ; Min 180 Cd/m^2 IntelliTouch: typical 270 Cd/m^2 ; Min 204 Cd/m^2 Acoustic Pulse Recognition: typical 270 Cd/m^2 ; Min 204 Cd/m^2 Projected-Capacitive: typical 270 Cd/m^2; Min 211 Cd/m^2 IntelliTouch Plus: typical 270 Cd/m^2; Min 204 Cd/m^2
Response Time		Tr+Tf =5ms (Typ.)
Display Color		16.7M
Viewing Angle		Vertical ±80 ^{o} Horizontal ±85°
Input Video	Signal Type	R.G.B. Analog 0.7Vp-p, 75 ohm
	Sync	TTL Positive or Negative, Sync on green or Composite Sync.
	Connector	Mini D-Sub 15 pin ; DVI-D
Bottom Controls		Menu, ► , ◄ , Select, Power
Speakers		4Ω/2W each for left and right channel
Audio Input Connector		3.5mm TRS jack
Headphone Output connector		Two 3.5m TRS jack
OSD		Contrast, Brightness, H-Position, V-Position, Color Temperature, Phase, Clock, OSD Time, Recall, Language: English, French, Italian, German, Spanish, Japanese, Traditional Chinese and Simplified Chinese
Plug & Play		DDC 2B
Touch Panel		AccuTouch /IntelliTouch/Acustic Pulse Recognition Projected-Capacitive/IntelliTouch Plus
Power Supply HITRON ELECTRONICS CORP HEMG49-S120400-7		Input: 100-240 Vac, 60/50 Hz, 1.2-0.63 A; Output: 12 Vdc,4 A Max., 48W
System Rating		12 Vdc, 3.5A
Operating Conditions	Temperature	0°C ~ 40°C
	Humidity	20% ~ 80% (No Condensation)
	Altitude	0 to 3,000m
Storage Conditions	Temperature	-20°C ~ 60°C
	Humidity	10% ~ 90% (No Condensation)
	Altitude	0 to 12,192m
Dimensions (HxWxD)		453.92 x 321.02 x 236.2mm
Weight (Net)		7.3Kg
Certifications		CUL, UL, CE, FCC, VCCI, ICES-003

Touchmonitor Specifications

Model		**1519LM**
LCD Display		15.6" TFT Active Matrix Panel
Display Size		344.232 (H) x 193.536 (V) mm
Pixel Pitch		0.252 (H) x 0.252 (V) mm
Native Resolution		1366 x 768
Display Mode		720 x 350 (70Hz) - (may not display at full screen) 720 x 400 (70Hz) 640 x 480 (60 / 72 / 75Hz) 800 x 600 (56 / 60 / 72 / 75Hz) 832 x 624 (75Hz) 1024 x 768 (60 / 70 / 75Hz) 1280 x 800 (60Hz) 1280 x 960 (60Hz) 1280 x 1024 (60 / 75Hz) 1360 x 768 (60Hz) 1366 x 768 (60Hz) 1440 x 900 (60Hz) 1600 x 1200 (60Hz) 1680 x 1050 (60Hz)
Contrast Ratio		500 : 1 (typical)
Brightness		LCD Monitor: typical 250 Cd/m^2 ; Min 210 Cd/m^2 AccuTouch: typical 200 Cd/m^2 ; Min 157.5 Cd/m^2 IntelliTouch: typical 225 Cd/m^2 ; Min 178.5 Cd/m^2 Projectec-Capacitive: typical 225 Cd/m^2; Min 185 Cd/m^2 IntelliTouch Plus: typical 225 Cd/m^2; Min 179 Cd/m^2
Response Time		Tr+Tf =8ms (Typ.)
Display Color		16.7M
Viewing Angle		Vertical -45°/+20° Horizontal ±45°
Input Video	Signal Type	R.G.B. Analog 0.7Vp-p, 75 ohm
	Sync	TTL Positive or Negative, Sync on green or Composite Sync.
	Connector	Mini D-Sub 15 pin; DVI-D
Bottom Controls		Menu, ► ,◄ , Select, Power
Speakers		4Ω/2W each for left and right channel
Audio Input Connector		3.5mm TRS jack
Headphone Output connector		Two 3.5m TRS jack
OSD		Contrast, Brightness, H-Position, V-Position, Color Temperature, Phase, Clock, OSD Time, Recall, Language: English, French, Italian, German, Spanish, Japanese, Traditional Chinese and Simplified Chinese
Plug & Play		DDC 2B
Touch Panel		AccuTouch /IntelliTouch/ Projected-Capacitive/IntelliTouch Plus
Power Supply HITRON ELECTRONICS CORP HEMG49-S120400-7		Input: 100-240 Vac, 60/50 Hz, 1.2-0.63 A; Output: 12 Vdc,4 A Max., 48W
System Rating		12 Vdc, 3.5A
Operating Conditions	Temperature	0°C ~ 40°C
	Humidity	20% ~ 80% (No Condensation)
	Altitude	0 to 3,000m
Storage Conditions	Temperature	-20°C ~ 60°C
	Humidity	10% ~ 90% (No Condensation)
	Altitude	0 to 12,192m
Dimensions (HxWxD)		383.05 x 276.5 x 213.2mm
Weight (Net)		5.1Kg
Certifications		CUL, UL, CE, FCC, VCCI, ICES-003

15" LCD Touchmonitor (1519LM) Dimensions

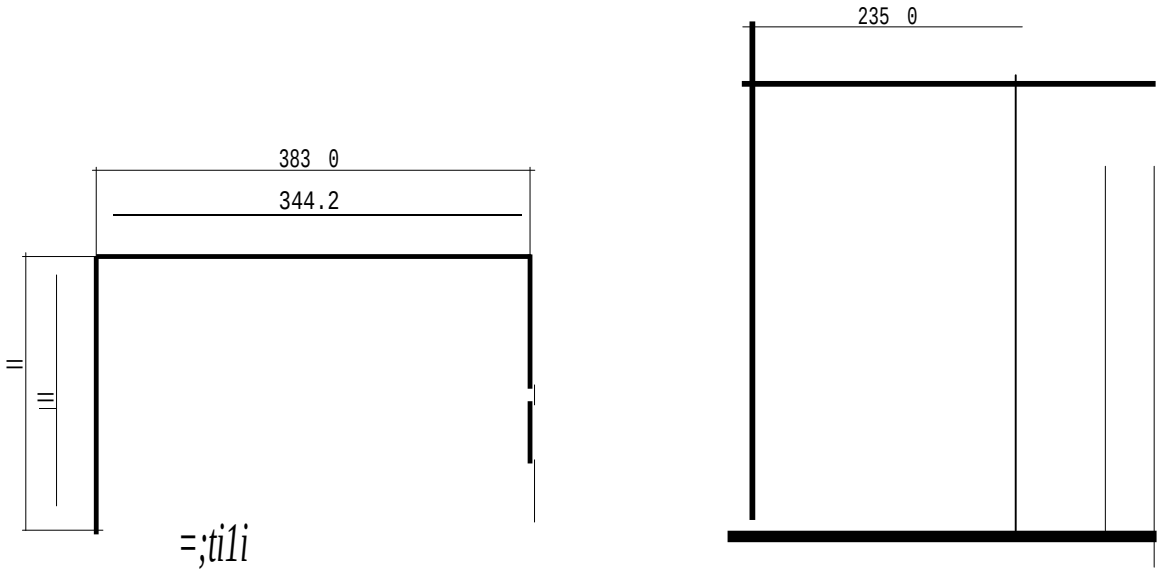

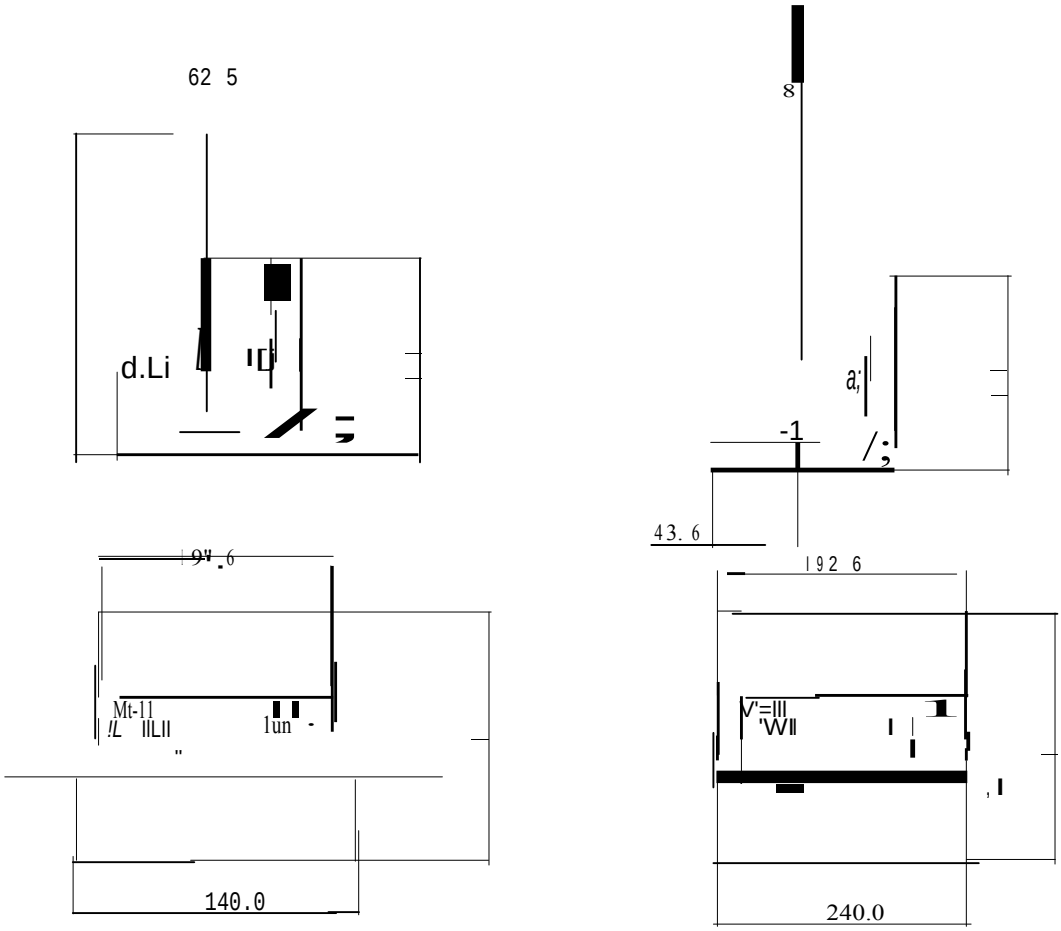

19" LCD Touchmonitor (1919LM) Dimensions

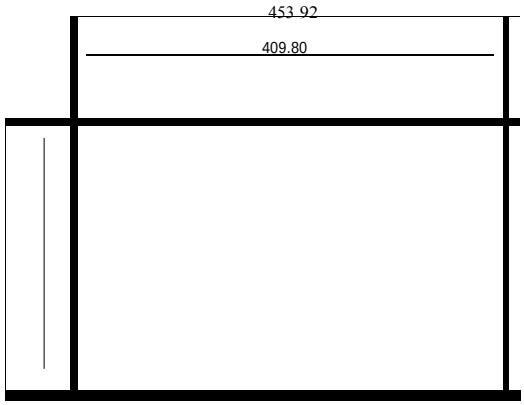

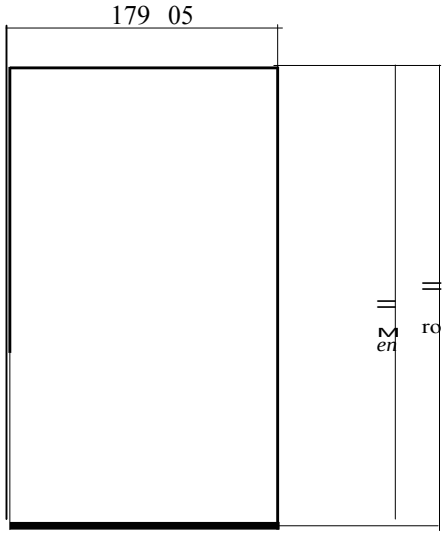

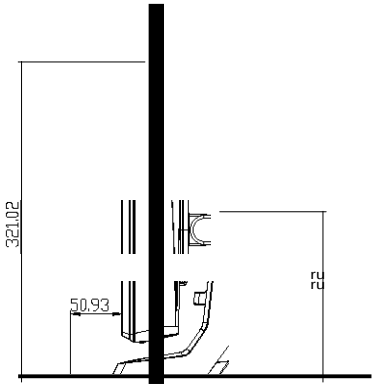

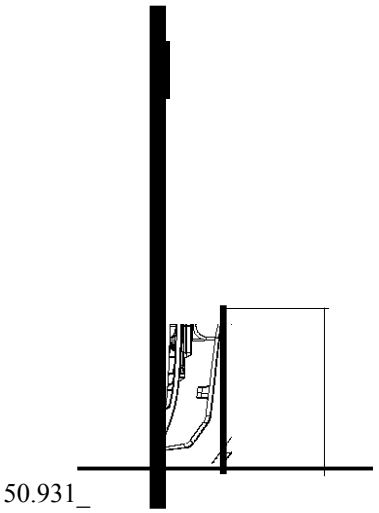

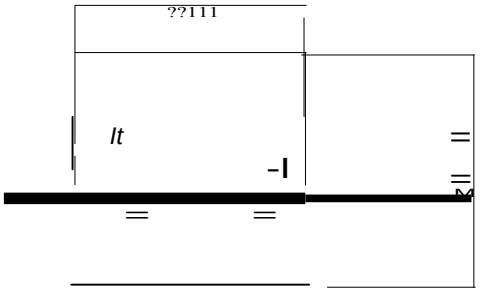

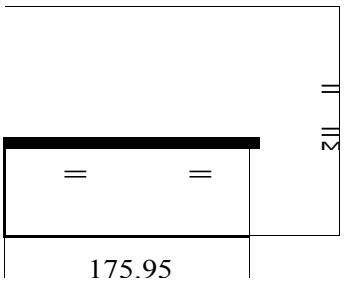

REGULATORY INFORMATION

I. Electrical Safety Information:

A) Compliance is required with respect to the voltage, frequency, and current requirements indicated on the manufacturer's label. Connection to a different power source than those specified herein will likely result in improper operation, damage to the equipment or pose a fire hazard if the limitations are not followed.

B) There are no operator serviceable parts inside this equipment. There are hazardous voltages generated by this equipment which constitute a safety hazard. Service should be provided only by a qualified service technician.

C) Contact a qualified electrician or the manufacturer if there are questions about the installation prior to connecting the equipment to mains power.

II. Emissions and Immunity Information

A) Notice to Users in the United States: This equipment has been tested and found to comply with the limits for a Class B digital device, pursuant to Part 15 of FCC Rules. These limits are designed to provide reasonable protection against harmful interference in a residential installation. This equipment generates, uses, and can radiate radio frequency energy, and if not installed and used in accordance with the instructions, may cause harmful interference to radio communications.

B) Notice to Users in Canada: This equipment complies with the Class B limits for radio noise emissions from digital apparatus as established by the Radio Interference Regulations of Industrie Canada.

C) Notice to Users in the European Union: Use only the provided power cords and interconnecting cabling provided with the equipment. Substitution of provided cords and cabling may compromise electrical safety or CE Mark Certification for emissions or immunity as required by the following standards:
This Electronic Equipment is required to have a CE Mark on the manufacturer's label which means that the equipment has been tested to the follwing Directives and Standards: This equipment has been tested to the requirements for the CE Mark as required by 2004/108/EC EMC and LVD 2006/95/EC indicated in European Standard EN 60601-1 and EN60601-1-2 (including EN55011 Class B)

D) General Information to all Users: This equipment generates, uses and can radiate radio frequency energy. If not installed and used according to this manual the equipment may cause interference with radio and television communications. There is, however, no guarantee that interference will not occur in any particular installation due to site-specific factors.

1) In order to meet emission and immunity requirements, the user must observe the following:
   a) Use only the provided I/O cables to connect this digital device with any computer.
   b) To ensure compliance, use only the provided manufacturer's approved line cord.
   c) The user is cautioned that changes or modifications to the equipment not expressly approved by the party responsible for compliance could void the user's authority to operate the equipment.
2) If this equipment appears to cause interference with radio or television reception, or any other device:
   a) Verify as an emission source by turning the equipment off and on.
   b) If you determine that this equipment is causing the interference, try to correct the interference by using one or more of the following measures:
      i) Move the digital device away from the affected receiver.
      ii) Reposition (turn) the digital device with respect to the affected receiver.
      iii) Plug the digital device into a different AC outlet so the digital device and the receiver are on different branch circuits.
      iv) Disconnect and remove any I/O cables that the digital device does not use. (Unterminated I/O cables are a potential source of high RF emission levels.)
      v) Plug the digital device into only a grounded outlet receptacle. Do not use AC adapter plugs. (Removing or cutting the line cord ground may increase RF emission levels and may also present a lethal shock hazard to the user.)

If you need additional help, consult your dealer, manufacturer, or an experienced radio or television technician.

III. Agency Certifications

The following certifications have been issued for this monitor:

- Canada CUL
- Canada IC
- Europe CE
- Japan VCCI
- FCC
- United States UL

WARRANTY

Except as otherwise stated herein or in an order acknowledgment delivered to Buyer, Seller warrants to Buyer that the Product shall be free of defects in materials and workmanship. The warranty for the touchmonitors and components of the product is 3 (three) years.
Seller makes no warranty regarding the model life of components. Seller's suppliers may at any time and from time to time make changes in the components delivered as Products or components.
Buyer shall notify Seller in writing promptly (and in no case later than thirty (30) days after discovery) of the failure of any Product to conform to the warranty set forth above; shall describe in commercially reasonable detail in such notice the symptoms associated with such failure; and shall provide to Seller the opportunity to inspect such Products as installed, if possible. The notice must be received by Seller during the Warranty Period for such product, unless otherwise directed in writing by the Seller. Within thirty (30) days after submitting such notice, Buyer shall package the allegedly defective Product in its original shipping carton(s) or a functional equivalent and shall ship to Seller at Buyer's expense and risk.
Within a reasonable time after receipt of the allegedly defective Product and verification by Seller that the Product fails to meet the warranty set forth above, Seller shall correct such failure by, at Seller's options, either (i) modifying or repairing the Product or (ii) replacing the Product. Such modification, repair, or replacement and the return shipment of the Product with minimum insurance to Buyer shall be at Seller's expense. Buyer shall bear the risk of loss or damage in transit, and may insure the Product. Buyer shall reimburse Seller for transportation cost incurred for Product returned but not found by Seller to be defective.
Modification or repair, of Products may, at Seller's option, take place either at Seller's facilities or at Buyer's premises. If Seller is unable to modify, repair, or replace a Product to conform to the warranty set forth above, then Seller shall, at Seller's option, either refund to Buyer or credit to Buyer's account the purchase price of the Product less depreciation calculated on a straight-line basis over Seller's stated Warranty Period.

THESE REMEDIES SHALL BE THE BUYER'S EXCLUSIVE REMEDIES FOR BREACH OF WARRANTY. EXCEPT FOR THE EXPRESS WARRANTY SET FORTH ABOVE, SELLER GRANTS NO OTHER WARRANTIES, EXPRESS OR IMPLIED BY STATUTE OR OTHERWISE, REGARDING THE PRODUCTS, THEIR FITNESS FOR ANY PURPOSE, THEIR QUALITY, THEIR MERCHANTABILITY, THEIR NONINFRINGEMENT, OR OTHERWISE. NO EMPLOYEE OF SELLER OR ANY OTHER PARTY IS AUTHORIZED TO MAKE ANY WARRANTY FOR THE GOODS OTHER THAN THE WARRANTY SET FORTH HEREIN. SELLER'S LIABILITY UNDER THE WARRANTY SHALL BE LIMITED TO A REFUND OF THE PURCHASE PRICE OF THE PRODUCT. IN NO EVENT SHALL SELLER BE LIABLE FOR THE COST OF PROCUREMENT OR INSTALLATION OF SUBSTITUTE GOODS BY BUYER OR FOR ANY SPECIAL, CONSEQUENTIAL, INDIRECT, OR INCIDENTAL DAMAGES.

Buyer assumes the risk and agrees to indemnify Seller against and hold Seller harmless from all liability relating to (i) assessing the suitability for Buyer's intended use of the Products and of any system design or drawing and (ii) determining the compliance of Buyer's use of the Products with applicable laws, regulations, codes, and standards. Buyer retains and accepts full responsibility for all warranty and other claims relating to or arising from Buyer's products, which include or incorporate Products or components manufactured or supplied by Seller.

Buyer is solely responsible for any and all representations and warranties regarding the Products made or authorized by Buyer. Buyer will indemnify Seller and hold Seller harmless from any liability, claims, loss, cost, or expenses (including reasonable attorney's fees) attributable to Buyer's products or representations or warranties concerning same.

Check out Our Website!

www.elotouch.com

Get the latest...

- *Product information*
- *Specifications*
- *News on upcoming events*
- *Press release*
- *Software drivers*
- *Touchmonitor Newsletter*

Getting in Touch with us

To find out more about TE's extensive range of Elo touch solutions, visit our website at www.elotouch.com or simply call the office nearest you:

North America
TE Touch Solutions
301 Constitution Drive,
Menlo Park, CA 94025
USA

(800) ELO-TOUCH
(800-557-1458)
Tel 650-361-4800
Fax 650-361-4722
customerservice@elotouch.com

Germany
Tyco Electronics Raychem GmbH
TE Touch Solutions
Finsinger Feld 1
D-85521 Ottobrunn
Germany

Tel +49(0)(89)60822-0
Fax +49(0)(89)60822-180
elosales@elotouch.com

Belgium
Tyco Electronics Raychem GmbH
TE Touch Solutions
Diestsesteenweg 692
B-3010 Kessel-Lo
Belgium

Tel +32(0)(16)35-2100
Fax +32(o)(16)35-2101
elosales@elotouch.com

Asian-Pacific
Sun Homada Bldg. 2F
1-19-20 Shin-Yokohama
Kanagawa 222-0033
Japan

Tel +81(45)478-2161
Fax +81(45)478-2180
www.tps.co.jp

© 2011 Tyco Electronics Corporation,
a TE Connectivity Ltd. Company. All Rights Reserved.