

CAREL UCHBP00000190 µChiller Controller Instruction Manual

Contents

1 CAREL UCHBP00000190 µChiller Controller
2 Description
3 USER TERMINAL
4 MOBILE DEVICE
5 ALARM TABLE
6 TECHNICAL SPECIFICATIONS
7 APPLICATIONS WITH FLAMMABLE REFRIGERANT GAS
8 MODELS AND OPTIONS
9 PANEL MOUNTING MODEL
10 Mounting
11 DIN RAIL MOUNTING
12 WIRING CONNECT
13 Documents / Resources
13.1 References

CAREL UCHBP00000190 µChiller Controller



Description

µChiller is the Carel solution for complete management of air/water and water/water chillers and heat pumps. The maximum confi guration manages 2 compressors per circuit (On/Off or BLDC), up to a maximum of 2 circuits (using an expansion card for the inputs and outputs on circuit 2). The distinctive element of µChiller is complete control of high-effi ciency units through integrated management of electronic expansion valves (ExV) and brushless DC compressor, thus ensuring greater compressor protection and reliability, together with high unit effi ciency. The user terminal allows
wireless connectivity with mobile devices and is integrated into the panel-mounted models, or purchased separately on DIN rail mounted models. The CAREL “APPLICA” app, facilitates configuration of the parameters and unit commissioning in the fi eld. The operation of µChiller is described in the user manual + 0300053EN downloadable, even prior to purchase, from the website **www.carel.com**.

CODES					
Cod.	Assembly	Connectiv.	Compressor managem.	Type (*)	Electronic expansion valve (Ex V) management
UCHBP00000190	panel	NFC	On-Off	S	bipolar: with EVDevo driver
UCHBP00000200	panel	NFC, BLE	On-Off	S	bipolar: with EVDevo driver
UCHBD00001230	DIN rail	–	On-Off	S	bipolar: with EVDevo driver
UCHBDE0001150	DIN rail	–	On-Off	E	unipolar: built-in bipolar: with EVDevo driver
UCHBDH0001150	DIN rail	–	On-Off, BLDC	HE	unipolar: built-in bipolar: with EVDevo driver
UCHBE00001230: 2nd circuit expansion	DIN rail	–	On-Off, BLDC	–	bipolar: with EVDevo driver
UCHBE00001150: 2nd circuit expansion	DIN rail	–	On-Off, BLDC	–	unipolar: built-in bipolar: with EVDevo driver

(*) Type: S=standard, E = enhanced, HE = high eff ciency

USER TERMINAL

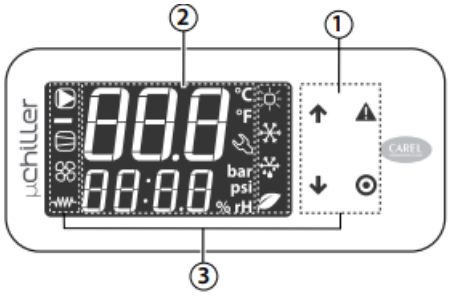

Fig. 1

Key

1. Keypad
2. Main fi eld
3. Icons: device status & operating mode

Icons

Icon	Function	On	Flashing
	System pump	Active	Manual operation
	Source device status (pump/fan)	Active	Manual operation
	Compressor status	Active	Manual operation (with ExV)
	Frost protection heater	Active	-
	Operating mode	Heating	-
		Cooling	High water temperature alarm
		Defrost	Dripping after defrost
		Free cooling	-
	Service	Service request on exceeding operating hours	Serious alarm, action required by qualified personnel

Keypad

Button		Function
	UP	Navigation: previous parameter Parameter setting: increase value
	DOWN	Navigation: next parameter Parameter setting: decrease value displayed. **MAIN MENU:** Pressed briefly: unit overview display Pressed and held (3 s): access user profile parameters (set point, unit on-off, ...)
	Alarm	Pressed briefly: display active alarms and mute buzzer. Pressed and held (3 s): reset alarms.
	PRG	During navigation: access the parameter setting menu During parameter setting: • pressed briefly: confirm the value • pressed and held (3 s): return to the main menu

MOBILE DEVICE

The “Applica” app can be used to confi gure the µChiller controller from a mobile device (smart-phone, tablet), via NFC (Near Field Communication) or BLE (Bluetooth Low Energy). Procedure (modify parameters):

1. download the CAREL “Applica” app for Android and o iOS devices;

2. (on the mobile device) activate NFC/Bluetooth communication and data connection;
3. open Applica;

Using NFC

- move the mobile device near to the user terminal, maximum distance 10 mm, so as to recog-nise the confi guration (Fig. 2 – ref. A);
- enter the password (*);
- set the parameters as needed;
- move the mobile device near to the user terminal again to upload the confi guration parameters (Fig. 2 – ref. B);

Using BLE

- move the mobile device near to the user terminal, maximum distance 10 m, to recognise the confi guration (Fig. 2 – ref. C);
- enter the password (*);
- set the parameters as needed.

(*) pre-assigned by the chiller manufacturer to allow maintenance only by authorised service technicians.

Important: during the fi rst connection, Applica aligns itself with the software version on the µChiller controller via a cloud connection; this means a mobile data connection is needed at least for this fi rst connection.

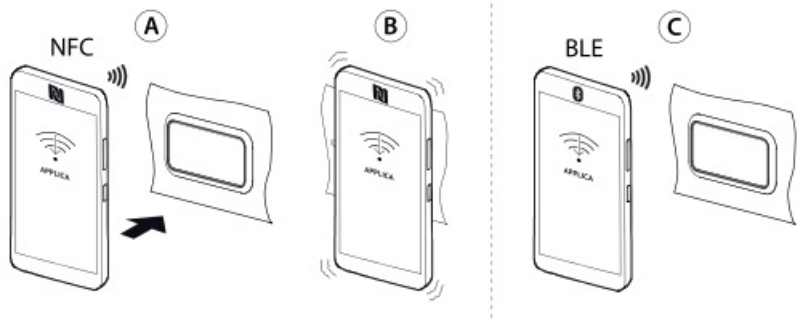

Fig. 2

COMMISSIONING

Note: for further information see user manual cod. +0300053EN. Once the Carel “Applica” app has been installed and opened (see the paragraph “Mobile device”, proceed as follows:

ALL MODELS:

1. With Bluetooth devices, access the Service menu by clicking the icon at the bottom right. With NFC devices, the Service menu is already displayed by default;
2. click “Set-up”–> “Confi gurations” –>”Defaults” (fi gure);

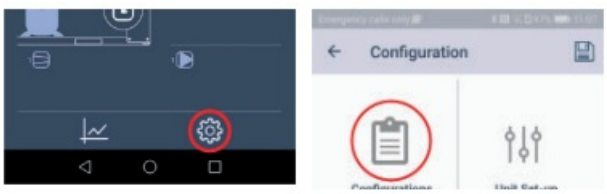

MODELS: STANDARD, ENHANCED (Note: see the code table)

3. select the refrigerant used in the unit;

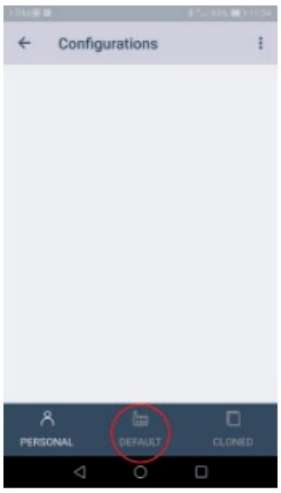



MODELS: HIGH EFFICIENCY (Note: see the code table)

select the compressor used in the unit;

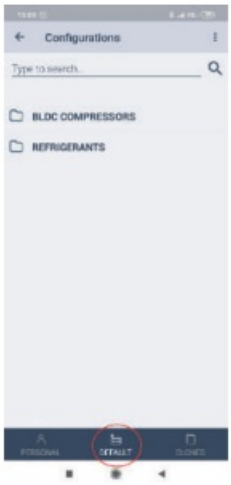

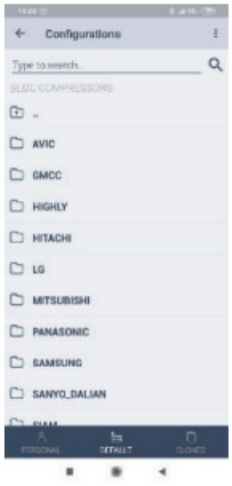

ALL MODELS:

4. apply the selected confi guration via NFC or Bluetooth. The refrigerant has now been correctly confi gured (models: Standard, Enhanced)/ the model of BLDC compressor and the refrigerant have been correctly confi gured (models: High Eff ciency);
5. continue confi guring the unit by selecting the “Unit set-up” menu, pressing the PREV / NEXT buttons to scroll through all of the confi guration parameter pages;
6. apply the parameters confi gured via NFC / Bluetooth to the controller.

ALARM TABLE

Code Description

Unit

A001	no. permanent memory writes	A002	permanent memory writes
A003	remote alarm from digital input	A004	remote set point probe
A005	user return water temperature probe	A006	user delivery water temperature probe
A008	user pump 1 overload	A009	user pump 2 overload
A10	flow switch (with user pump 1 active) A11		flow switch (with user pump 2 active)
A12	user pump group	A13	user pump 1 maintenance
A14	user pump 2 maintenance	A15	high chilled water temperature
A16	source return water/air temper. probe	A17	source pump 1 maintenance
A18	free cooling warning	A19	Circuit 1: condensation pressure probe

Circuit 1

A20	condensing temperature probe	A21	evaporation pressure probe
A22	evaporation temperature probe	A23	discharge temperature probe
A24	suction temperature probe	A25	high pressure switch
A26	high condensing pressure/temperature A27 transducer		low pressure transducer
A28	frost protection evaporation temperat. A30		compressor 1 overload
A31	compressor 2 overload	A32	compressor 1 maintenance
A33	compressor 2 maintenance	A34	source fan maintenance

EVD Circuit 1

A35	LowSH	A36	LOP
A37	MOP	A38	motor error
A39	emergency closing	A40	incomplete valve closing
A41	offline	A42	envelope alarm + zone alarm

BLDC Circuit 1

A43	high pressure differential at start-up A44	failed start-up
A45	Low pressure differential A46	high gas discharge temp.

Speed Drive Circuit 1

A47	offline A48	alarm + error code

Secondary unit

A49	offline A50	no. permanent memory writes
A51	permanent memory writes	

Circuit 2

A52	condensation pressure probe	A53	condensing temperature probe
A54	evaporation pressure probe	A55	evaporation temperature probe
A56	discharge temperature probe	A57	suction temperature probe
A58	high pressure switch	A59	high condensing pressure/temperature transducer
A60	low pressure transducer	A61	frost protection evaporation temperat.
A63	compressor 1 overload	A64	compressor 2 overload
A65	compressor 1 maintenance	A66	compressor 2 maintenance
A67	source fan maintenance		

EVD Circuit 2

A68	LowSH	A69	LOP
A70	MOP	A71	motor error
A72	emergency closing	A73	incomplete valve closing
A74	offline	A75	circuit 2: envelope alarm + zone alarm

BLDC Circuit 2

A76	high pressure differential at start-up A77	failed start-up
A78	low pressure differential A79	High gas discharge temperat.

Speed Drive Circuit 2

A80	offline	alarm + error code
A87	EVD Evolution not compatible	

TECHNICAL SPECIFICATIONS

(for both models)

Technical specifications, µChiller PANEL and DIN

Physical specifications

Case	Polycarbonate
Assembly	UCHBP*: panel models; UCHBD*: DIN rail models
Ball test temp.	125°C
Ingress protection	IP20 (rear,panel model)
	IP65 (front, panel model)
	IP00 (DIN version)
Front cleaning	Use soft, non-abrasive cloth and neutral detergent or water

Environmental conditions

- **Operating conditions –**20T60°C, <90% RH non-condensing.
- **Storage conditions –**40T80°C, <90% RH non-condensing.

Electrical characteristics

- Rated power supply voltage 24 Vac/dc (provided by SELV or PELV Class 2 power supply)
- Oper. power sup. voltage 24 Vac/dc, +10% -15%;
- Input frequency (AC) 50/60Hz
- Max current draw Panel and DIN without ExV valve driver:600mArms
- DIN with ExV valve driver: 1.25 Arms
- Absorbed power for transformer
- sizing Panel and DIN without ExV valve driver: 15 VA
- DIN with ExV valve driver: 30 VA
- Clock precision ± 50ppm; date/time retention after shutdown: 72h
- Software class and struc. A
- Environmental pollution 3
- Class of protection against
- electric shock
- To be incorporated into class I or II appliances
- Type action and discon. 1.C
- Rated impulse voltage relay output: 4kV; 24 V input: 0.5 kV
- Surge immunity category relay output: III; 24 V input: II
- Control device construc. Device to be incorporated
- Terminal block Plug-in male-female. Wire sizes: see the connector table
- Purpose of the control Electrical operating control

User interface

- **Buzzer Panel:** integrated
  - **DIN:** not included on the controller, integrated on the user terminal
- **Display** LED 2 rows, decimal point, and multi-function icons

Connectivity

NFC	Max distance 10mm, variable according to the mobile device used

Bluetooth Low Energy	Max distance 10m, variable according to the mobile device used
BMS serial interface	Modbus over RS485, not opto-isolated
FieldBUS serial interface	Modbus over RS485, not opto-isolated; Max. number of devices that can be connected: 20
HMI interface	Modbus over RS485, not opto-isolated

Analogue inputs (Lmax=10m)
Ref.

J2	S1, S2, S3: NTC	NTC: resolution 0.1° C; 10k @ 25°C; error: ±1°C in the range -50T50°C, ±3°C in the range 50 T90°C 0-10 V: error 2% fs, typical 1% 4-20mA: error 5% fs, typical 1% 0-10 V: error 2% fs, typical 1%
	S5: 0-5V rat /4-20 mA / NTC	
J3	S4: 0-5V rat /4-20 mA / NTC	
	S6: NTC / 0-5 Vrat / 0-10 V / 4-20mA	
J9	S7: NTC – avail. only on DIN version	

Digital inputs

J2	ID1(*)	Voltage-free contact, not opto-isolated, typical closing current 6 mA, open con tact voltage 13 V, contact resistance max 50 Ω. (*) Fast digital input: 0-2 kHz; error 2% fs
J2	ID2	
J3	ID3 (*), ID4, ID5,	
J9	ID6 – available only on DIN version	

Valve output

J14	available only on DIN version	CAREL E*V unipolar valve power supply: 13 Vdc, min. winding resistance 40 Ω

Analogue outputs
Ref.

J2	Y1, Y2	0-10V: 10 mA max

Digital outputs

J6	NO1 (5A), NO2 (5A), NO3 (5A), NO4 (5A)	5A: EN60730: 5 A resistive, 250 Vac, 50k cycles; 4(1), 230 Vac, 100k cycles; 3 (1), 230 Vac, 100k cycles UL60730: 5 A resistive, 250 Vac, 30k cycles; 1 FLA, 6 LRA, 250 Vac, 30 k cycles; Pilot Duty C300, 30k cycles
J7	NO5 (5A)	
J11	NO6 (5A)- available only on DIN version	

Note: the sum of the current drawn by NO1, NO2, NO3 and N04 must not exceed 8A.

Emergency power supply

J10	Ultracap module (optional, only available on the DIN versions)	13 Vdc +/-10%

Probe and terminal power supply

5V	5 Vdc ± 2% to power the 0 to 5 V ratiometric probes. Maximum current delivered: 35mA protected against short-circuits
+V	8-11 V to power the 4-20 mA current probes. Max current delivered: 80 mA protected against short-circuits
VL	not used
J8	13 Vdc ± 10% to power the user terminal

Cable lengths

Analogue inputs/outputs, digital inputs /outputs, probe power	<10m (*) (*) in the panel version, if using the VL power supply in household environments, the maximum cable length is 2 m.
Valve	<2 m, <9 m with shielded cable
BMS and Fieldbus serial cables	<500m with shielded cable

Conformity

EMC	CE	EN61000-6-1, EN61000-6-2, EN61000-6-3, EN61000-6-4
Radio	Red	EN301489-1/EN301489-17, EN300328
	FCC	Contains FCC ID: WAP2001
	IC	Contains IC: 7922A-2001
	ANATEL	*ID: 03780-21-05684 – Este equipamento não tem direito à proteção contra interferência prejudicial e não pode causar interferência em sistemas devida- mente aut orizados.*

APPLICATIONS WITH FLAMMABLE REFRIGERANT GAS

About the use of this product (except SSR versions) with A3, A2 or A2L fl ammable refrigerants, ithas been evaluated and judged compliant with the following requirements:

- Annex CC of IEC 60335-2-24:2010 referenced by clause 22.109 and Annex BB of IEC 60335-2- 89:2019 referenced by clause 22.113; components that produce arcs or sparks during normal operation have been tested and found to comply with the requirements in UL/IEC 60079-15;
- IEC 60335-2-24:2010 (clauses 22.110)
- IEC 60335-2-40:2018 (clauses 22.116, 22.117)
- IEC 60335-2-89:2019 (clauses 22.114)

Surface temperatures of all components and parts have been measured and verifi ed during the tests required by IEC 60335 cl. 11 and 19, and found not exceeding 268 °C.
Models with SSR comply with standard IEC 60335-2-40:2018 in case of using A2L refrigerants (e.g. R32); in detail, electrical components that could be a source of ignition under normal operation are in compliance with Annex JJ, and the maximum surface temperature of all components does not exceed 268°C, during normal operation.
Acceptability of these controllers in end use application where fl ammable refrigerant is used shall be reviewed and judged in the end use application.
(*) Applicable to the products with revision above 1.5xx.

MODELS AND OPTIONS

- Model type Description
- ACU4 PANEL 4 relays + NFC
- ACU4B PANEL 4 relays + NFC/BLE

- ACU5 PANEL 5 relays + NFC
- ACU5B PANEL 5 relays + NFC/BLE
- ACUD4L DIN 4 relays 24V
- ACUD4LN DIN 4 relays 24V + NFC
- ACUD4LB DIN 4 relays 24V + NFC/BLE
- ACUD5L DIN 5 relays 24V
- ACUD5LN DIN 5 relays 24V + NFC
- ACUD5LB DIN 5 relays 24V + NFC/BLE
- ACUD5YL DIN 5 relays + 2xAO 24V
- ACUD5YLN DIN 5 relays + 2xAO 24V + NFC
- ACUD5YLB DIN 5 relays + 2xAO 24V + NFC/BLE

PANEL MOUNTING MODEL

Dimensions – mm (in)

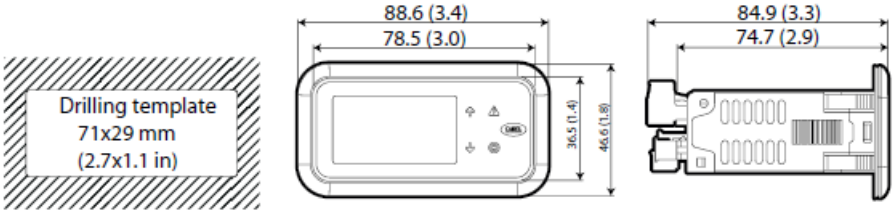

Mounting

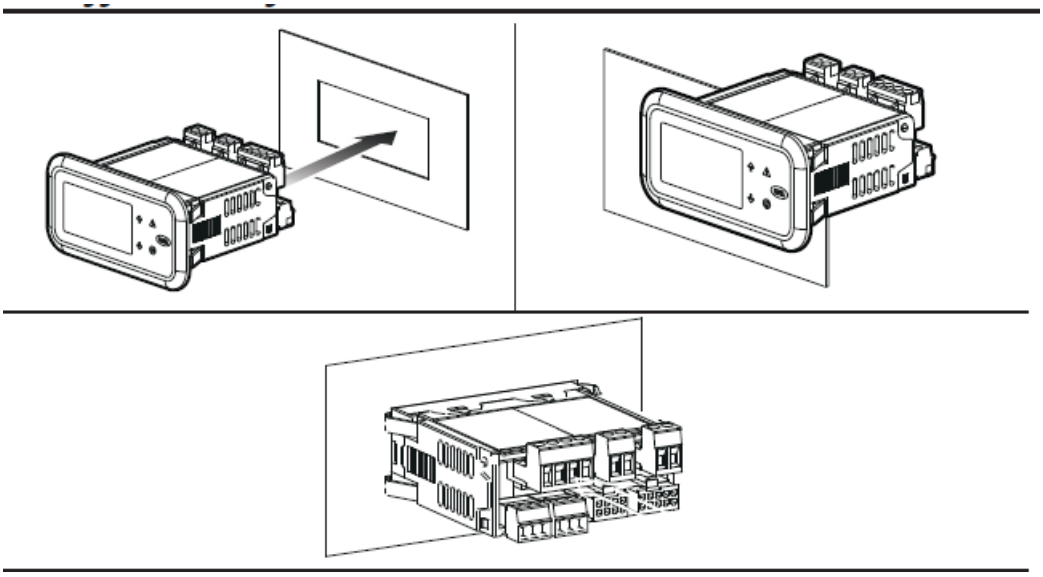

Place the controller in the opening, press lightly on the side tabs and then on the front until fully inserted (the side tabs will bend, and the catches will attach the controller to the panel).
Important: IP65 front protection is guaranteed only if the following conditions are met:

- maximum deviation of the rectangular opening from fl at surface: ≤ 0.5 mm;
- thickness of the electrical panel sheet metal: 0.8-2 mm;
- maximum roughness of the surface where the gasket is applied: ≤ 120 µm.

  Note: the thickness of the sheet metal (or material) used to make the electrical panel must be adequate to ensure safe and stable mounting of the product.

Disassembly

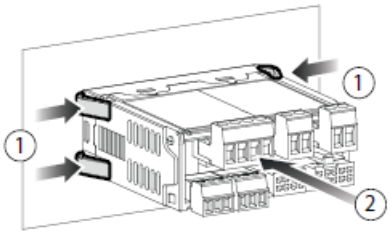

Open the electrical panel from the rear and press the anchoring tabs and then the controller to remove it.
Important: The operation does not require the use of a screwdriver or other tools.

DIN RAIL MOUNTING

Dimensions mm (in)

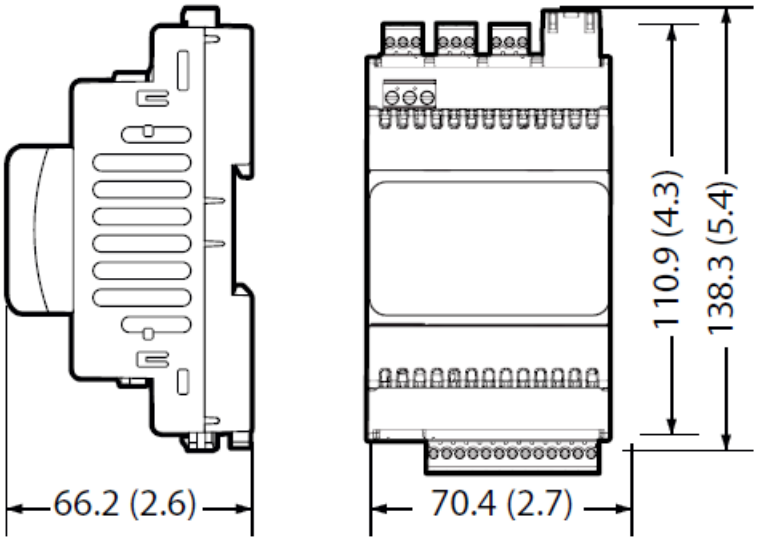

Mounting

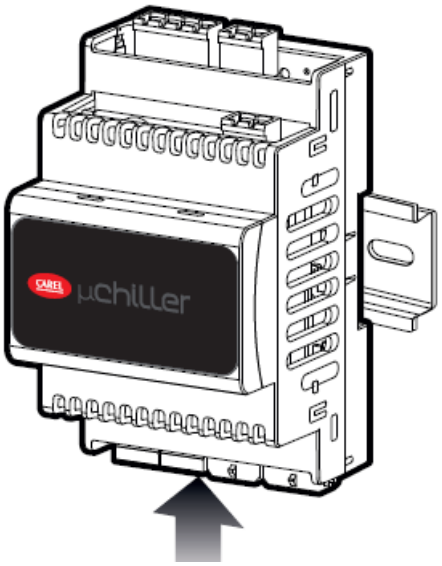

WIRING CONNECT

Connection: panel mounting

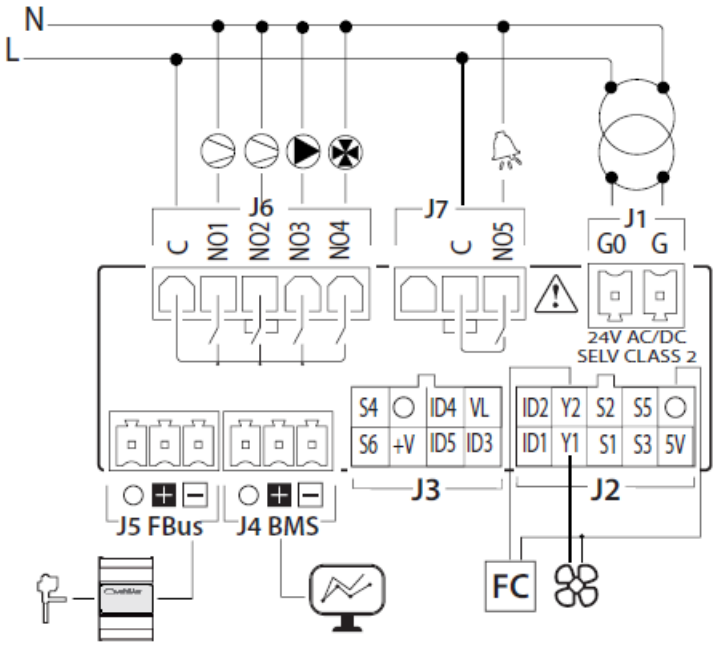

Connection: DIN rail mounting

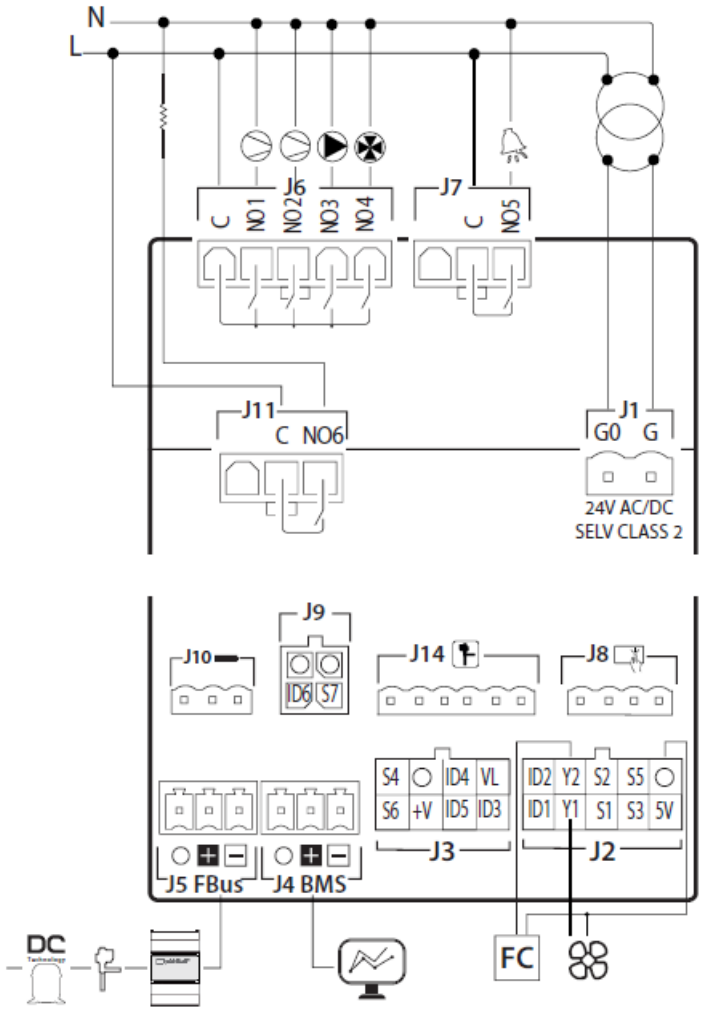

Probe connection (all mod.)

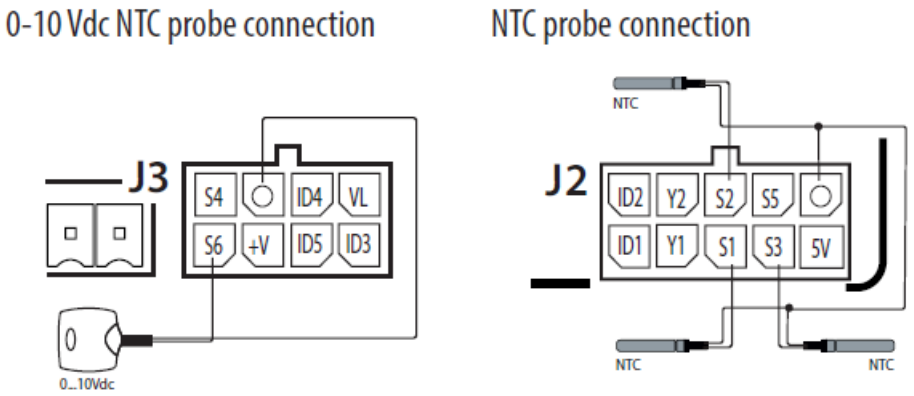

Ratiometric probe connection

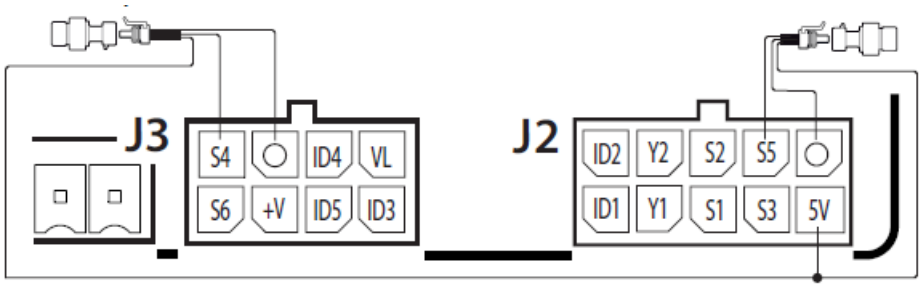

4-20mA probe connection

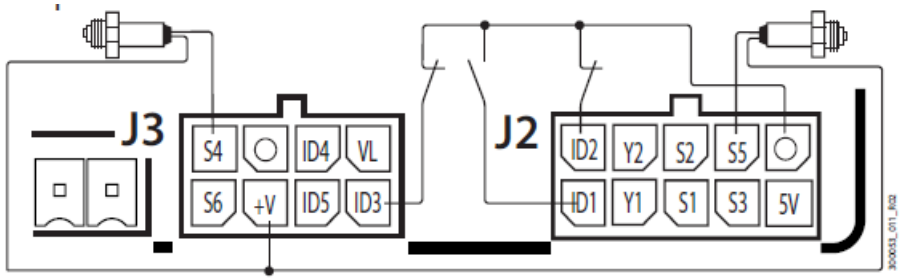

Note: = GND

Disposal of the product: The appliance (or the product) must be disposed of separately in accordance with the local waste disposal legislation in force.
Warning: separate as much as possible the probe and digital input signal cables from the cables carrying inductive loads and power cables to avoid possible electromagnetic disturbance. Never run power cables (including the electrical panel wiring) and signal cables in the same conduits.

CAREL INDUSTRIES HQs
Via dell'Industria, 11 – 35020 Brugine – Padova (Italy)

- **Tel.** (+39) 0499716611
- **Fax** (+39) 0499716600
- **e-mail:** carel@carel.com
- www.carel.com

Documents / Resources

	**CAREL UCHBP00000190 µChiller Controller** [pdf] Instruction Manual 0500144IE, UCHBP00000190, UCHBP00000190 Chiller Controller, Chiller Controller, Controller

References

- CAREL

Manuals+,