2CKA001473B9187 | 28.11.2018

Product manual

Busch-free@home®

Sensor/blind actuator, 1/1gang; 2/1gang, wireless

6213/1.1-WL

6213/1.1-WL



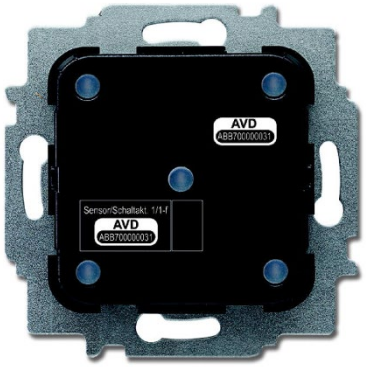

BUSCH-JAEGER

1 Information on the manual ... 3

2 Safety ... 4
2.1 Information and symbols used ... 4
2.2 Intended use ... 5
2.3 Improper use ... 5
2.4 Target group / Qualifications of personnel ... 5
2.5 Safety instructions ... 6
2.6 Environment ... 6

3 Setup and function ... 7
3.1 Scope of supply ... 8
3.2 Overview of types ... 8
3.3 Functions ... 8
3.4 Device overview ... 9

4 Technical data ... 10
4.1 Dimensional drawings ... 10

5 Connection and installation ... 11
5.1 Planning instructions ... 11
5.2 Safety instructions ... 12
5.3 Circuit diagrams ... 13
5.4 Installation ... 14

6 Commissioning ... 16
6.1 Coupling of wireless devices with the System Access Point ... 17
6.1.1 Resetting the wireless device to the factory settings ... 17
6.2 Allocation of devices and definition of channels ... 19
6.2.1 Add device ... 19
6.3 Setting options per channel ... 24
6.3.1 Parameter settings of 1/1gang sensor/blind actuator ... 25
6.3.2 Parameter settings of 2/1gang sensor/blind actuator ... 29
6.4 Links ... 30
6.4.1 Linking actuator and sensor ... 30
6.4.2 Linking an actuator with an additional sensor ... 31

7 Update ... 32

8 Operation ... 33

9 Maintenance ... 34
9.1 Cleaning ... 34
9.2 Diagnosis of faults ... 35

10 Notes ... 36

11 Index ... 37

1 Information on the manual

Please read this manual carefully and observe the information it contains. This will assist you in preventing injuries and damage to property, and ensure both reliable operation and a long service life for the device.

Please keep this manual in a safe place.

If you pass the device on, also pass on this manual along with it.

Busch-Jaeger accepts no liability for any failure to observe the instructions in this manual.

If you require additional information or have questions about the device, please contact Busch-Jaeger or visit our Internet site at:

www.busch-jaeger.de/freeathome

2 Safety

The device has been constructed according to the latest valid regulations governing technology and is operationally reliable. It has been tested and left the factory in a technically safe and reliable state.

However, residual hazards remain. Read and adhere to the safety instructions to prevent hazards of this kind.

Busch-Jaeger accepts no liability for any failure to observe the safety instructions.

2.1 Information and symbols used

The following Instructions point to particular hazards involved in the use of the device or provide practical instructions:



Danger

Risk of death / serious damage to health

– The respective warning symbol in connection with the signal word "Danger" indicates an imminently threatening danger which leads to death or serious (irreversible) injuries.



Warning

Serious damage to health

– The respective warning symbol in connection with the signal word "Warning" indicates a threatening danger which can lead to death or serious (irreversible) injuries.



Caution

Damage to health

– The respective warning symbol in connection with the signal word "Caution" indicates a danger which can lead to minor (reversible) injuries.



Attention

Damage to property

– This symbol in connection with the signal word "Attention" indicates a situation which could cause damage to the product itself or to objects in its surroundings.



NOTE

This symbol in connection with the word "Note" indicates useful tips and recommendations for the efficient handling of the product.



This symbol alerts to electric voltage.

2.2 Intended use

This device is a sensor/actuator unit for decentralized flush-mounted installation.

The device is intended for the following:

- Operation according to the listed technical data
- Installation in dry interior rooms and suitable flush-mounted boxes
- Use with the connecting options available on the device

The intended use also includes adherence to all specifications in this manual.

2.3 Improper use

Each use not listed in Chapter 2.2 “Intended use“ on page 5 is deemed improper use and can lead to personal injury and damage to property.

Busch-Jaeger is not liable for damages caused by use deemed contrary to the intended use of the device. The associated risk is borne exclusively by the user/operator.

The device is not intended for the following:

- Unauthorized structural changes
- Repairs
- Outdoor use
- The use in bathroom areas

2.4 Target group / Qualifications of personnel

Installation, commissioning and maintenance of the device must only be carried out by trained and properly qualified electrical installers.

The electrical installer must have read and understood the manual and follow the instructions provided.

The electrical installer must adhere to the valid national regulations in his/her country governing the installation, functional test, repair and maintenance of electrical products.

The electrical installer must be familiar with and correctly apply the "five safety rules" (DIN VDE 0105, EN 50110):

1. Disconnect
2. Secure against being re-connected
3. Ensure there is no voltage
4. Connect to earth and short-circuit
5. Cover or barricade adjacent live parts

2.5 Safety instructions



Danger - Electric voltage!

Electric voltage! Risk of death and fire due to electric voltage of 100 … 240 V.

Dangerous currents flow through the body when coming into direct or indirect contact with live components. This can result in electric shock, burns or even death.

- Work on the 100 … 240 V supply system may only be performed by authorised and qualified electricians.
- Disconnect the mains power supply before installation or dismantling.
- Never use the device with damaged connecting cables.
- Do not open covers firmly bolted to the housing of the device.
- Use the device only in a technically faultless state.
- Do not make changes to or perform repairs on the device, on its components or its accessories.



Caution! - Risk of damaging the device due to external factors!

Moisture and contamination can damage the device.

- Protect the device against humidity, dirt and damage during transport, storage and operation.

2.6 Environment



Consider the protection of the environment!

Used electric and electronic devices must not be disposed of with domestic waste.

– The device contains valuable raw materials which can be recycled. Therefore, dispose of the device at the appropriate collecting depot.

All packaging materials and devices bear the markings and test seals for proper disposal. Always dispose of the packaging material and electric devices and their components via the authorized collecting depots and disposal companies.

The products meet the legal requirements, in particular the laws governing electronic and electrical devices and the REACH ordinance.

(EU Directive 2012/19/EU WEEE and 2011/65/EU RoHS)

(EU REACH ordinance and law for the implementation of the ordinance (EC) No.1907/2006).

3 Setup and function

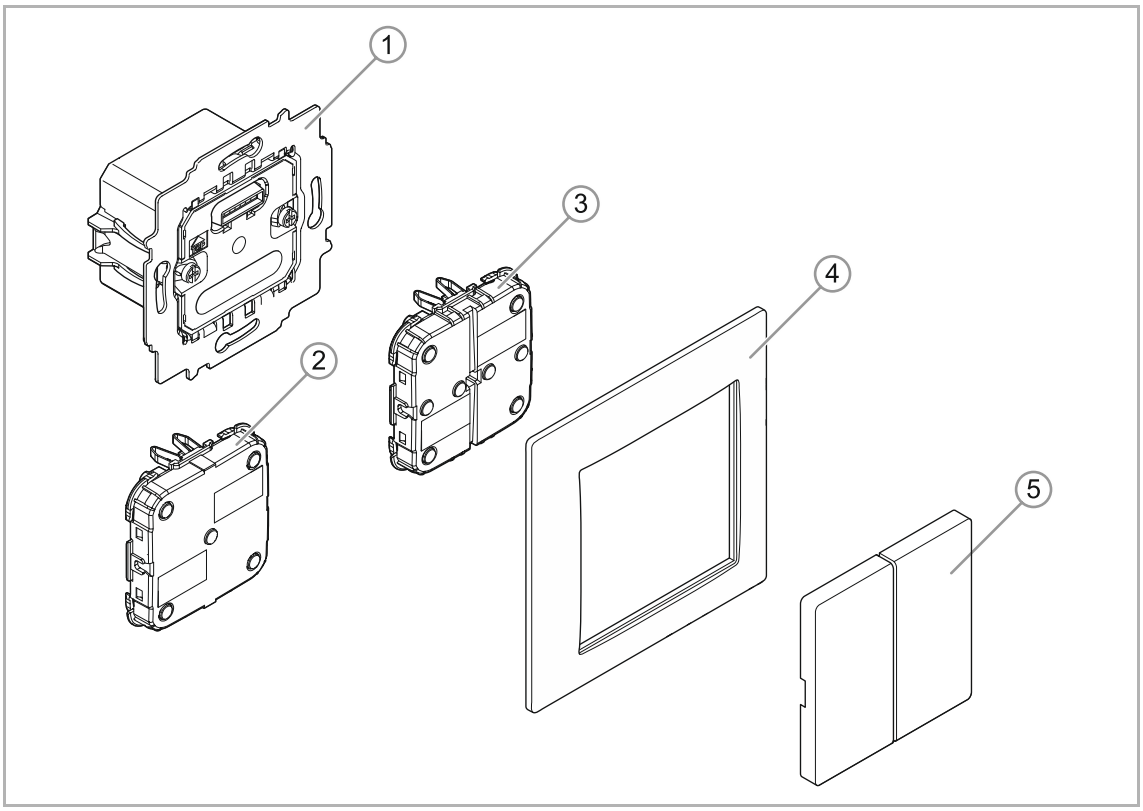

Fig. 1: Product overview

[1] Flush-mounted insert

[2] Sensor für Sensor/Jalousieaktor 1/1-fach

[3] Sensor for sensor/blind actuator, 2/1-gang

[4] Cover frame (not included in scope of delivery)

[5] Rocker (not included in scope of delivery)

This device is a sensor/blind actuator unit for decentralized flush-mounted installation. The devices serve for controlling blind motors (e.g. sun protection applications) and are pre-programmed accordingly (button top/bottom: up/down; left rocker). However, this pre-configuration can be adjusted as required. Also air vents, gates and windows can be controlled.

Sensor and actuator are combined in a flush-mounted insert [1].

After connecting the load, it can be switched directly on the control element.

Additional product features:

- Green LEDs as light for orientation and status indication
- Exchangeable rockers with the corresponding icons

3.1 Scope of supply

The scope of supply only contains the flush-mounted insert [1] and the sensor [2 or 3].

It must still be completed with a suitable rocker [5] and a cover frame [4].

Note

- Depending on their use, the rockers can be selected with different printing. Additional information about the switch ranges is available in the electronic catalogue (www.busch-jaeger-katalog.de).

3.2 Overview of types

Article no.	Product name	Sensor channels		Actuator channels		Switching load
6213/1.1-WL	Sensor/blind actuator, 1/1gang, wireless	1		1		4 A cosϕ = 0.5
6213/1.1-WL	Sensor/blind actuator, 2/1gang, wireless	2		1		4 A cosϕ = 0.5

Table 1: Overview of types

3.3 Functions

The following table provides an overview of the possible functions and applications of the device:

Icon of the user interface	Information	
	**Name:**	Sensor
	Type:	Sensor
	Made available by:	Sensor/blind actuator
	Function:	Control element for the control of free@home functions
	**Name:**	Blind actuator
	Type:	Actuator
	Made available by:	Sensor/blind actuator
	Function:	Switches connected loads

Table 2: Overview of functions

3.4 Device overview

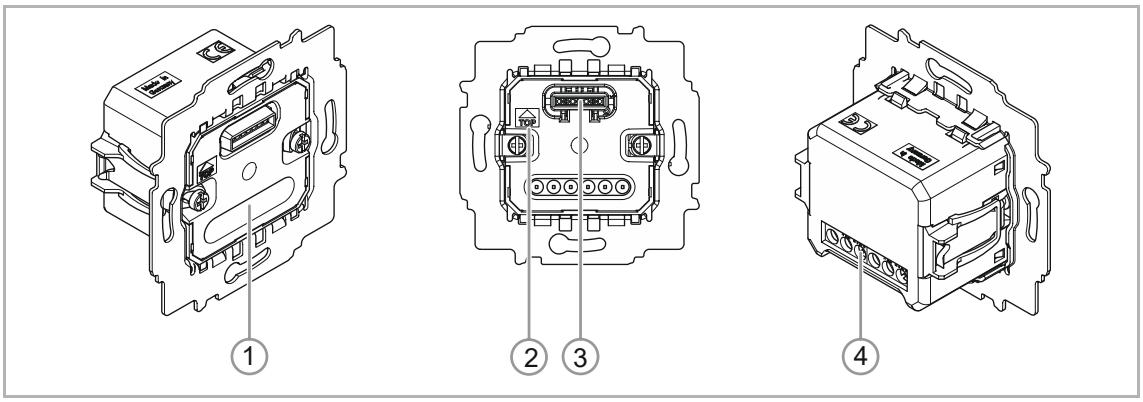

Fig. 2: Overview of devices Sensor/blind actuator, 1/1gang; 2/1gang, wireless (without sensors)

[1] Phase sensing L

[2] Mark TOP

[3] Terminal strip for sensor

[4] Bottom terminal block

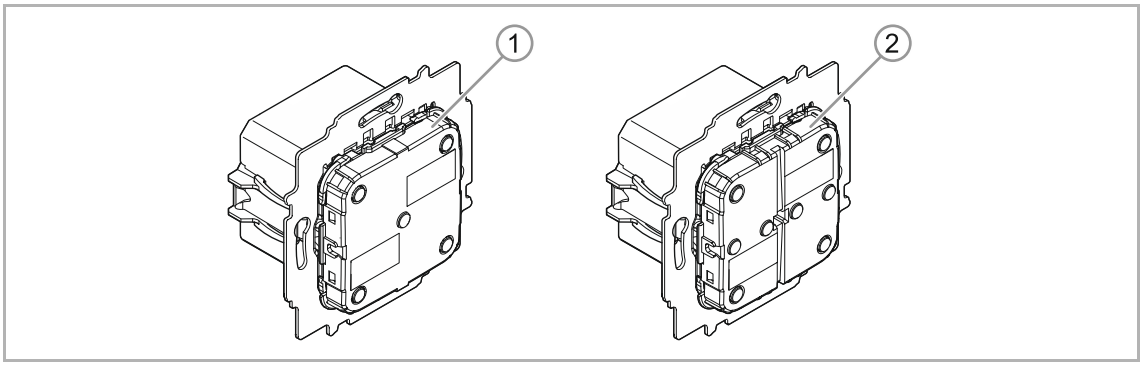

Fig. 3: Sensors

[1] Sensor for Sensor/blind actuator, 1/1gang, wireless

[2] Sensor for Sensor/blind actuator, 2/1gang, wireless

4 Technical data

Designation	Value
Operating voltage	230 V AC, 50/60 Hz
Connection	L, N (option), inputs and outputs non-floating Screw-type terminal: 2 x 2.5 mm² rigid; 2 x 1.5 mm² flexible
Claw	With protective cover and reset (removable)
Transmission protocol	free@home wireless
Transmission frequency	2.400 - 2.483 GHz
Maximum transmission power WL (wireless)	< 15 dBm
Power consumption	< 1 W
Maximum load	4 A Ⓜ
Protection type	IP20
Ambient temperature	-5°C - +45°C
Storage temperature	-20°C - +70°C

Table 3: Technical data

4.1 Dimensional drawings

NOTE
All dimensions are specified in mm. All device types listed in this manual have the same dimensions.

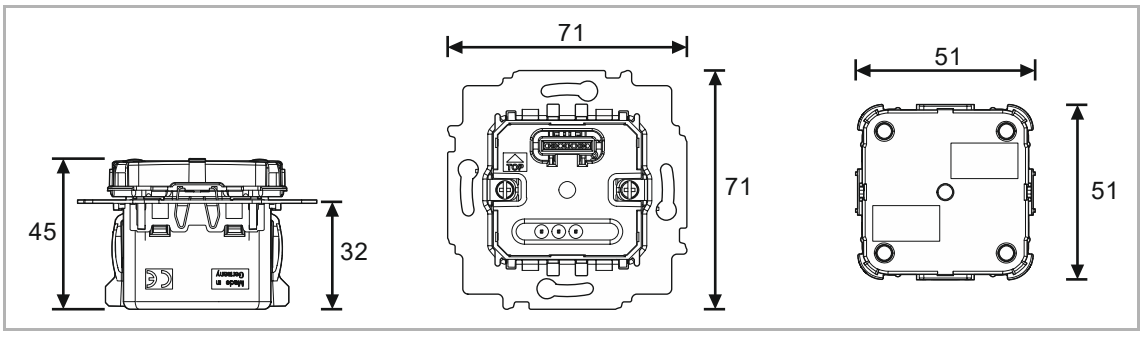

Fig. 4: Dimensions of all described device types (all dimensions in mm)

5 Connection and installation

5.1 Planning instructions



Note

Planning and application instructions for the system are available in system manual for Busch-free@home®. This can be downloaded via www.busch-jaeger.de/freeathome.



Note

Transmitter and receiver communicate via radio control. The transmission range depends on the structural conditions. Walls and ceilings, especially steel reinforcements or metal claddings, reduce the transmission range. The distance of components to each other and to other transmitters that also emit high-frequency signals (e.g. computers, audio and video systems) should be at least 1 m.

5.2 Safety instructions



Danger - Electric shock due to short-circuit!

Risk of death due to electrical voltage of 100 … 240 V during short-circuit in the low-voltage conduit.

– Low-voltage and 100 … 240 V conduits must not be installed together in a flush-mounted box!
– Observe the spatial division during installation (> 10 mm) of SELV electric circuits to other electric circuits.
– If the minimum distance is insufficient, use electronic boxes and insulating tubes.
– Observe the correct polarity.
– Observe the relevant standards.



Danger - Electric voltage!

Install the device only if you have the necessary electrical engineering knowledge and experience.

- Incorrect installation endangers your life and that of the users of the electrical system.
- Incorrect installation can cause serious damage to property, e.g. due to fire.

The minimum necessary expert knowledge and requirements for the installation are as follows:

- Apply the "five safety rules" (DIN VDE 0105, EN 50110):
  1. Disconnect
  2. Secure against being re-connected
  3. Ensure there is no voltage
  4. Connect to earth and short-circuit
  5. Cover or barricade adjacent live parts.
- Use suitable personal protective clothing.
- Use only suitable tools and measuring devices.
- Check the type of supply network (TN system, IT system, TT system) to secure the following power supply conditions (classic connection to ground, protective earthing, necessary additional measures, etc.).
- Observe the correct polarity.

5.3 Circuit diagrams

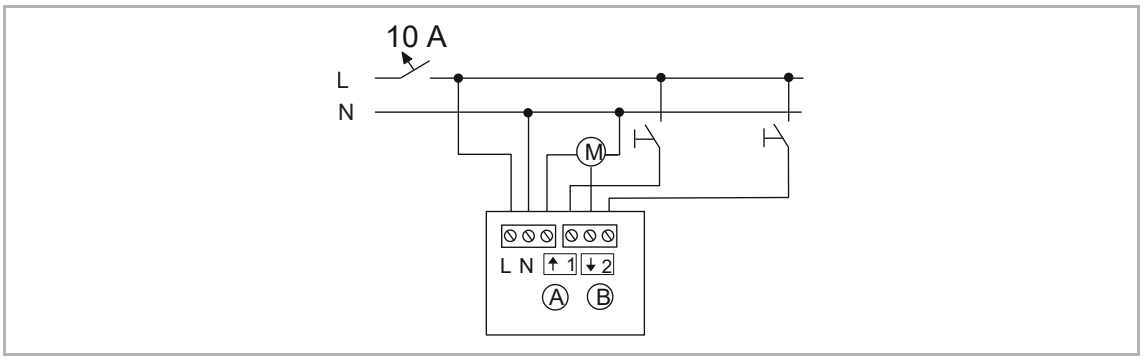

Fig. : Electrical connection

[A] Up

[B] Down

5.4 Installation

Note
The devices have been prepared for installing in flush-mounted boxes in connection with the corresponding mounting plate. The device insert has already been inserted in the mounting plate.

To install the device, perform the following steps:

Note
The sensor must be pulled off the flush-mounted insert before mounting!

Note
Observe correct wiring!

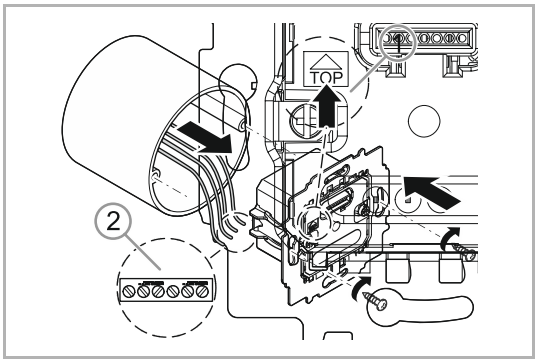

Abb. 5: Connection and installation

1. Turn the device into the correct installation position [1].
2. Connect the 230 V power cord to the bottom terminal block [2].

Observe **Chapter 5.3 “Circuit diagrams“ on page 13**.

3. Insert the device into the flush-mounted box and screw it on.

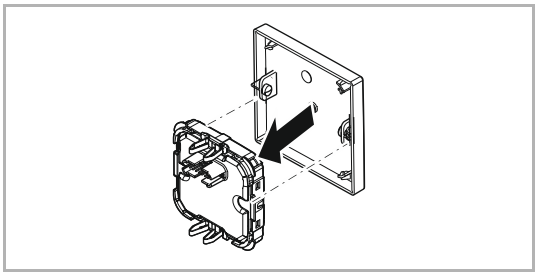

Fig. 6: Mounting the cover

4. Attach the cover (rocker; example shows only a 1gang rocker) to the sensor.

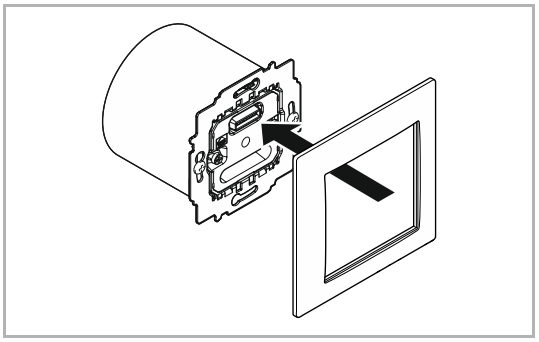

Fig. 7: Mounting the cover fame

5. Mount the cover frame.

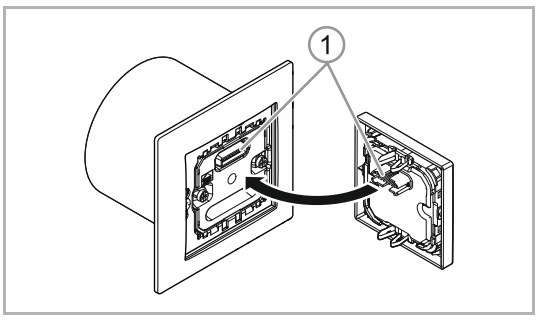

Fig. 8: Mounting the sensor

6. Attach the cover (with mounted sensor) to the flush-mounted insert.

Observe the correct position of the sensor connection [1].

6 Commissioning

Commissioning of the device is always carried out via the Web-based surface of the System Access Point. It is assumed that the basic commissioning steps of the overall system have already been carried out. Knowledge about the Web-based commissioning software of the System Access Point is assumed.

The System Access Point establishes the connection between the free@home participants and the smartphone, tablet or PC. The System Access Point is used to identify and program the participants during commissioning.

When energized, a device that has not been programmed is in programming mode for 30 minutes and can be logged into the system. Programmed devices share information about their type and supported functions with the System Access Point.

During initial commissioning all devices are given a universal name (e.g. sensor/switch actuator, sensor/dimming actuator, sensor/blind actuator, room temperature controller, movement detector, etc.). The installer must change this name within the commissioning process to a name practical and specific for the system (in case of an actuator, e.g. to "Living room ceiling light").

The devices must be parameterised for the use of additional functions.



Note
General information about commissioning and parameterization is available in the Busch-free@home® system manual.

6.1 Coupling of wireless devices with the System Access Point

free@home wireless devices must first be coupled with the System Access Point before they can be used in a project. The devices exchange a security key during the coupling process.

Communication between devices is carried out encrypted after coupling and they are firmly connected with the System Access Point. Coupled devices cannot be connected with a different System Access Point. They must first be reset to the factory settings.

Carry out the following steps to couple one or several devices with the system:

1. Install the free@home wireless device(s).
2. Use your smartphone, tablet or PC to call up the user interface of the System Access Point that is ready for use.
3. Switch on the mains power supply of the free@home wireless devices.

The devices are now in programming mode for 30 minutes.

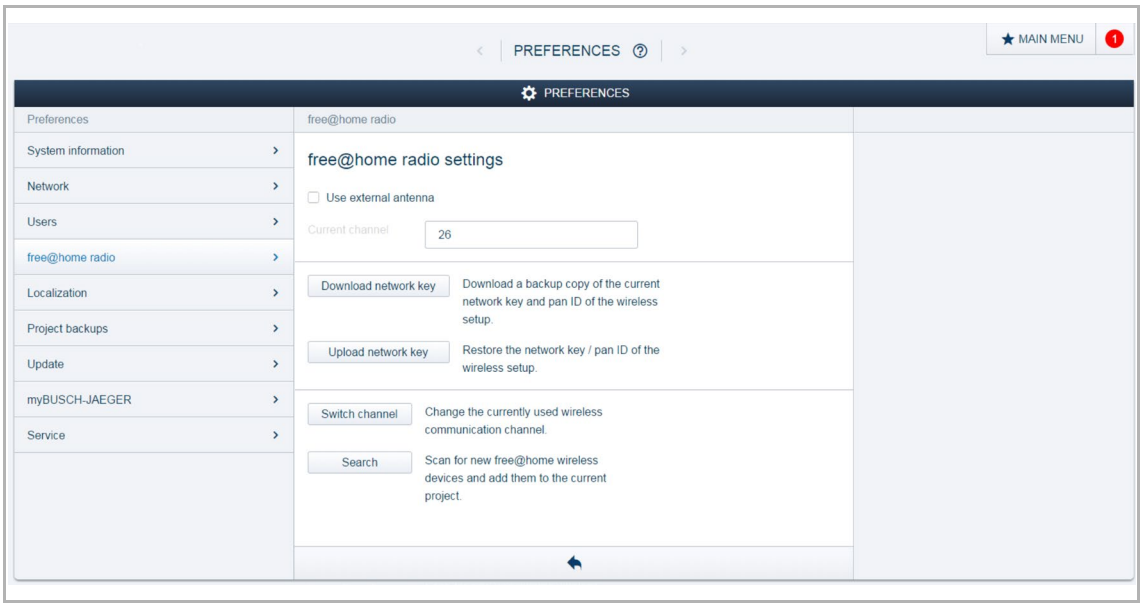

Fig 9: Coupling wireless devices with the System Access Point

4. In the user interface of the System Access Point select "System settings" "free@home-Wireless settings" "Search for wireless devices".

   The System Access Point consecutively scans all free@home wireless devices. Devices that are in programming mode are integrated automatically into the system. The scanning process ends 10 minutes after the last device has been integrated.

   Integrated devices are listed in the "Device list" of the user interface.
5. Use the serial numbers to check whether all installed devices have been found.
   If a device has not been found, reset it to the factory settings and start a new scanning process.

   Possible reasons for not finding devices:
   - The device is not in programming mode.
   - The 30-minute programming time has expired.
   - The device has already been coupled with a different system.

6.1.1 Resetting the wireless device to the factory settings

1. De-energize the free@home wireless device.

2. Keep the button at the bottom left pressed.
3. Re-energize the device.

   The LED flashes slowly for 10 seconds, then fast for 5 seconds and then goes out.

   The factory settings are restored and the device can now be programmed again.



Note
Devices which are already in factory settings are not reset again. The LED remains out in step 3.

6.2 Allocation of devices and definition of channels

The devices connected to the system must be identified, i.e. they are allocated to a room according to their function and are given a practical name.



The allocation is made via the allocation function of the Web-based user interface of the System Access Point.

6.2.1 Add device

1. In the "Add devices" bar select the desired application and pull it via drag-and-drop into the floor plan.

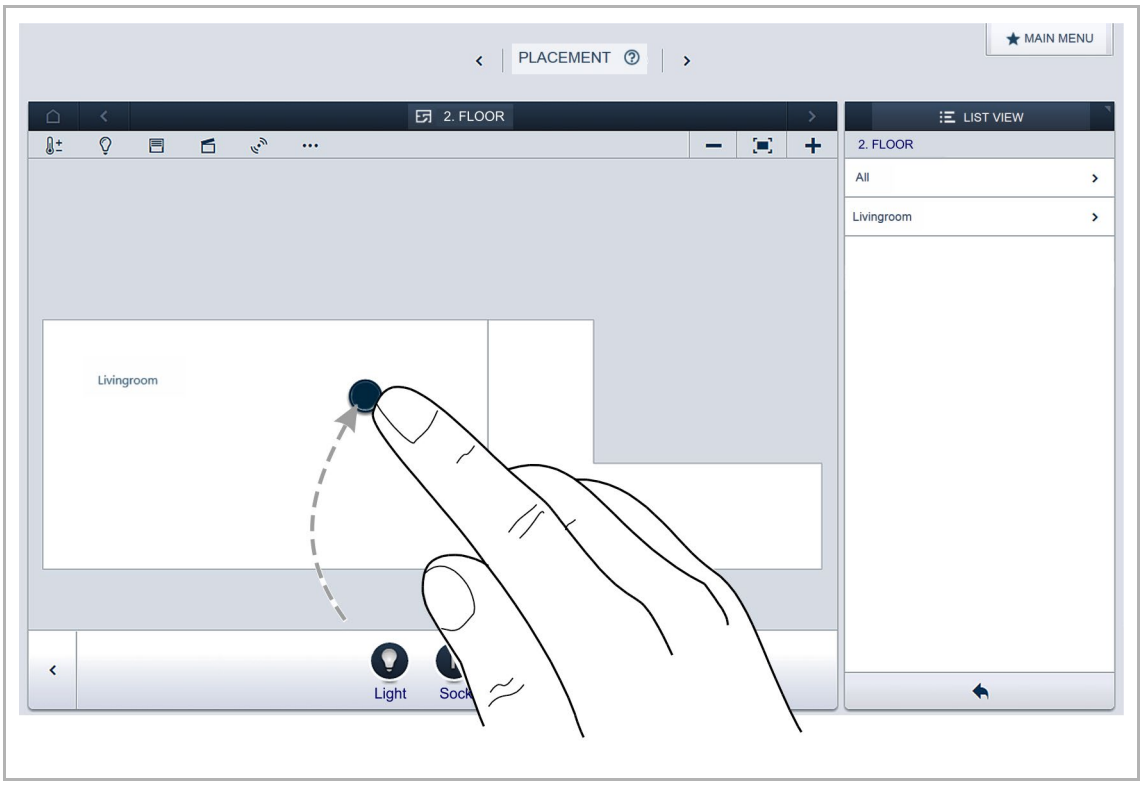

Fig. 10: Dragging the application from the add bar

A pop-up window opens which lists all the devices that are connected to the bus and suitable for the selected application (e.g. all blind actuators, if the blind application has been selected).

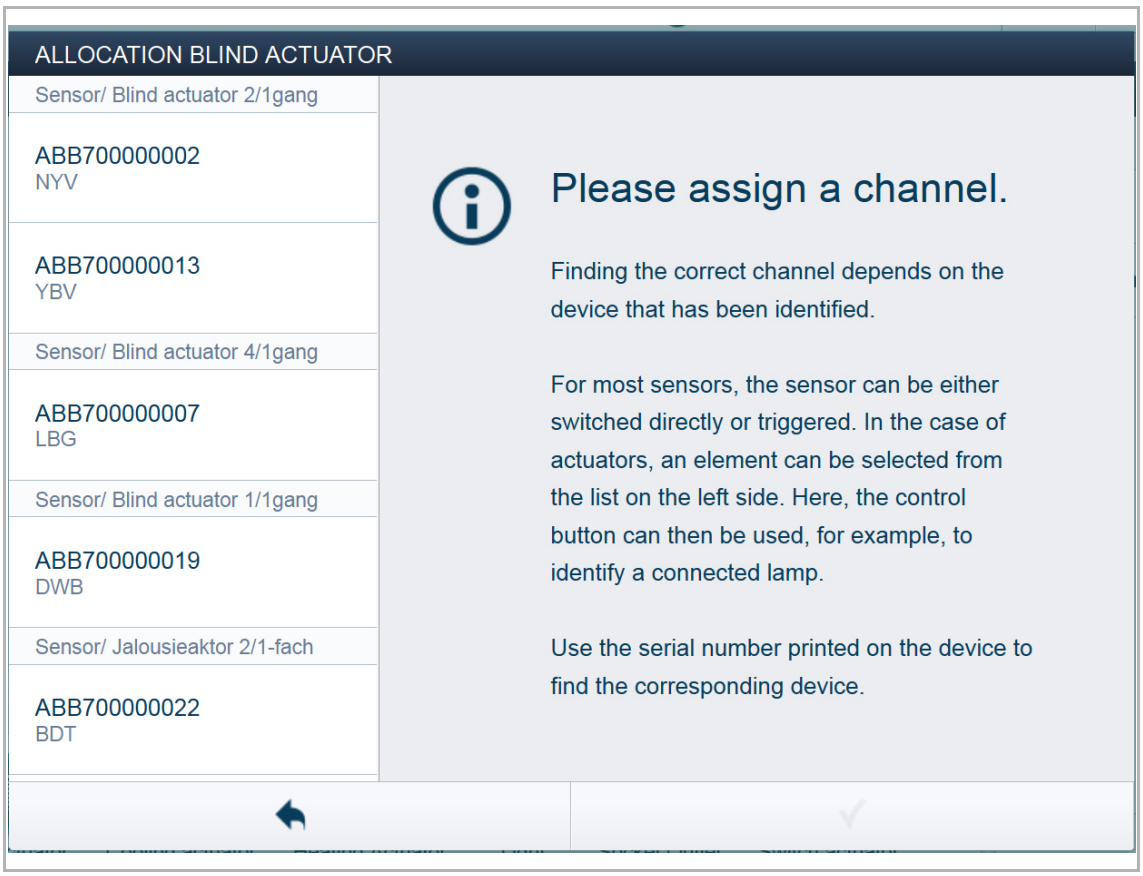

Fig. 11: Pop-up window with the suitable devices

Identification

The device can be identified via the serial number or via switching.

Identification via serial number

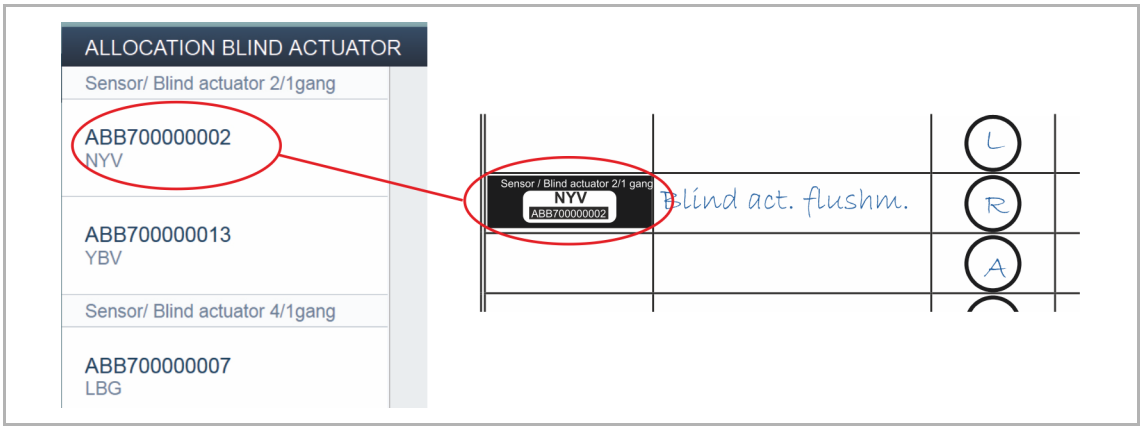

Fig. 12: Identification via serial number

- Compare the serial number and the short ID of the identification label, which glued on the device, with the numbers and IDs in the list. This is how the searched for device and possibly the searched for channel are identified.

Identification via switching (only suitable for actuators)

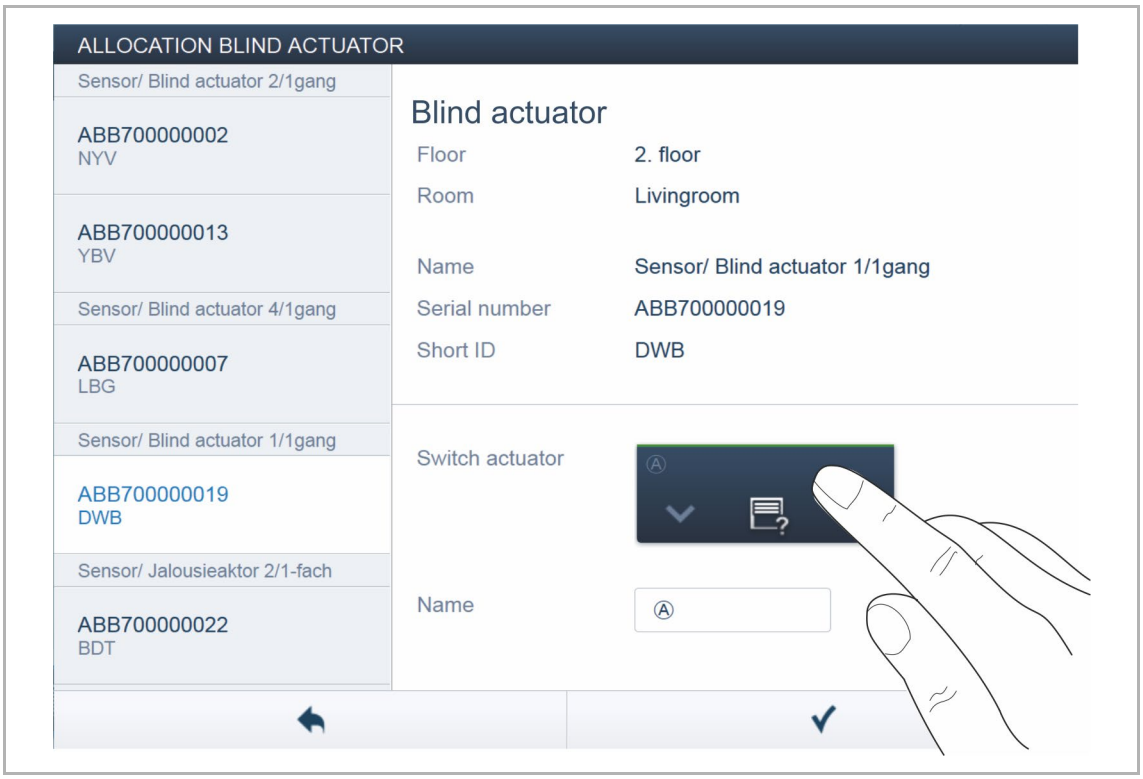

Fig. 13: Identification via switching

1. Select a device and a channel from the list.
2. Press the button in the detailed view of the device.

The connected load is switched.

3. Repeat the last two steps until you have located the searched for device.

Specifying a name

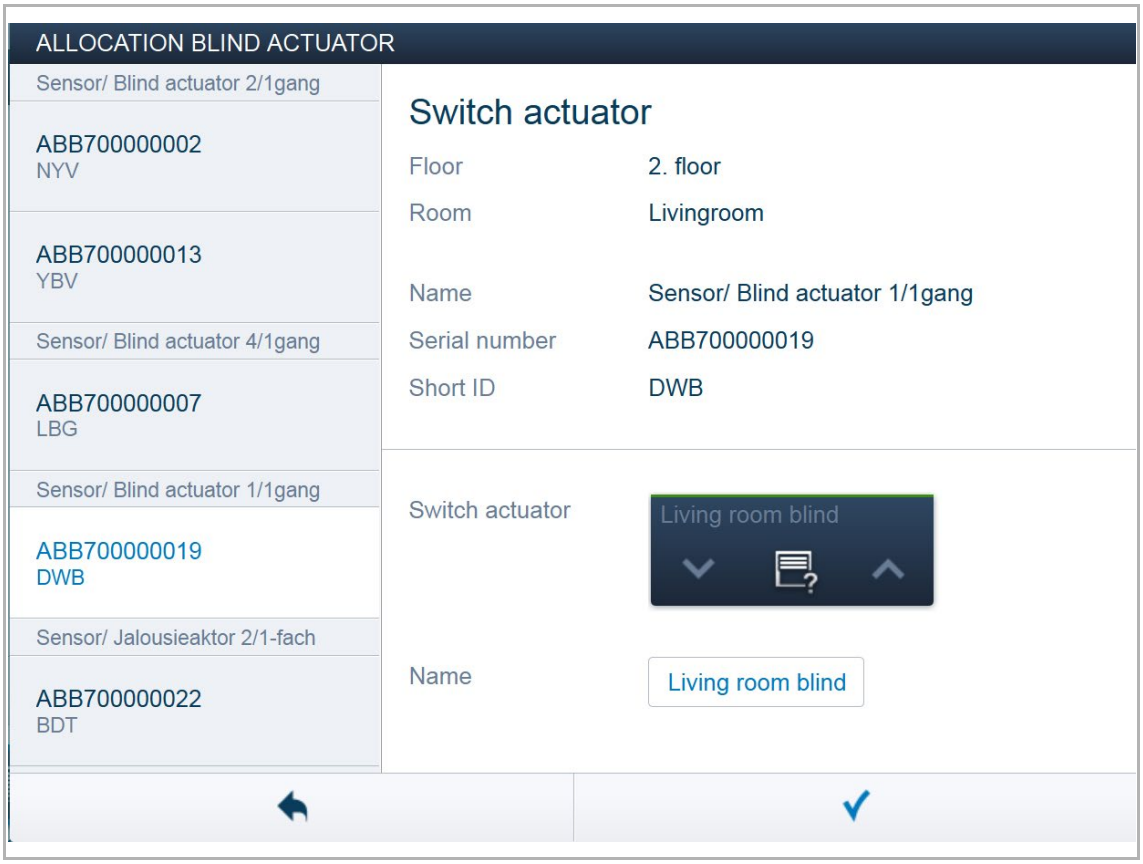

Fig. 14: Specifying a name

1. Enter a name that is easy to understand and under which the application is to be displayed later (e.g. "Living room blind").

. Press the tick at the bottom right.

This takes over the entry.

Note

The settings of the device can be adjusted via the Web-based user interface of the System Access Point.

For pre-programmed devices (sensor/blind actuator unit) the default settings can be adjusted. This allows the channel selection to be influenced.

These settings, however, can only be made in part with the fitter access (see online Help of the System Access Point). The parameter settings remain as described above.

6.3 Setting options per channel

General settings and special parameter settings must be made for each channel.



The settings are made via the allocation function of the Web-based user interface of the System Access Point.

Select device

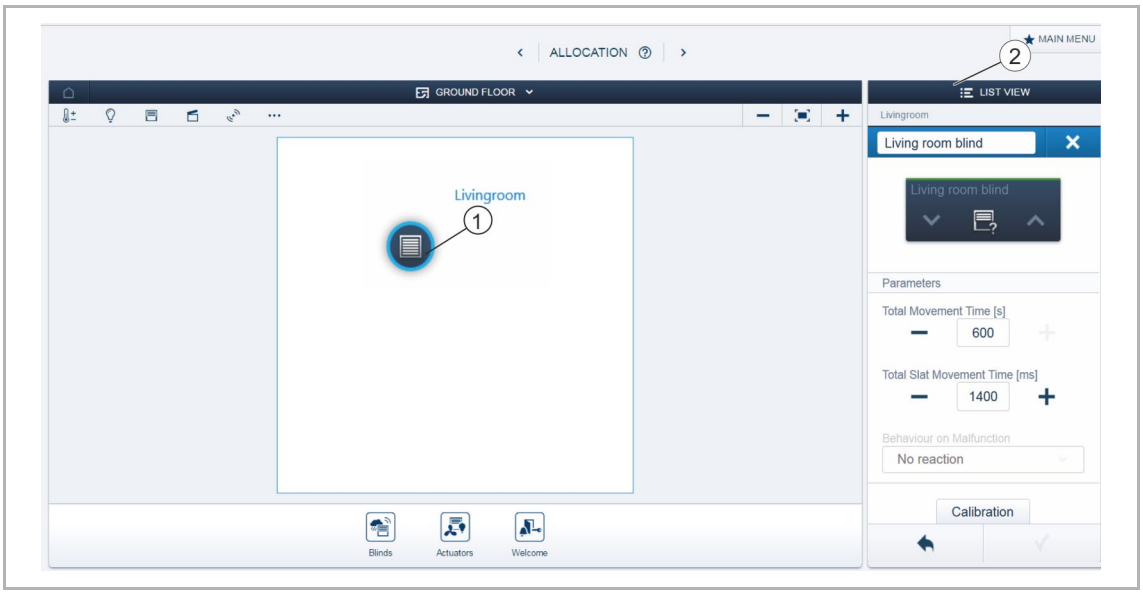

Fig. 15: Select device

1. Select the device icon [1] in the floor plan of the working area view.

All setting options for the respective channel are displayed in the list view [2]. For rockers (sensors) the corresponding rocker must be selected.

The following settings are available.

6.3.1 Parameter settings of 1/1gang sensor/blind actuator

Actuator settings

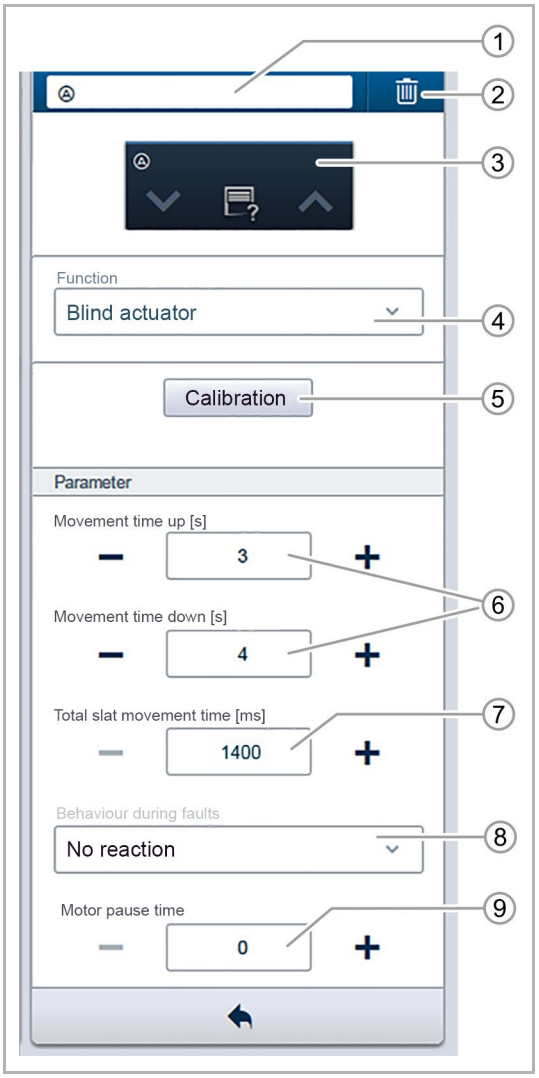

Fig. 16: Actuator settings

[1] Changing the name

[2] Deleting the channel

[3] Switching the actuator via the ∨ ∧ buttons

[4] Selection of the type of actuator for optimizing the behaviour during different events.
Selecting the function:

- Blind actuator
- Roller blind actuator
- Roof window actuator
- Awning actuator

[5] Button "Calibration"

– A wizard guides you through the calibration process.

[6] Setting the movement time up/down in seconds via the -/+ buttons

[7] Setting the time in milliseconds via the −/+ buttons, which the slats require for a complete change in direction of their angle.

– The time for an individual step is fixed at 200 ms and cannot be changed.

[8] Behaviour during faults

– Display of information only. No settings are possible.

[8] Setting the motor pause time in milliseconds via the -/+ buttons

– Please check the operating manual of the blind motor for specifying the correct pause time of the motor (period between switching the actuator and start-up of the motor). This value is required for the setting of the slats.

Sensor settings

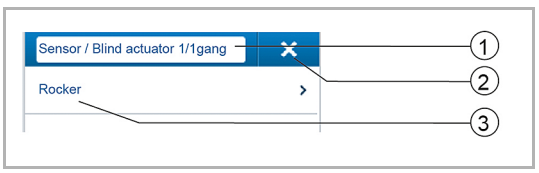

Fig. 17: Sensor settings

[1] Changing the name

[2] Deleting the channel

[3] Selecting the rocker in the list view

Blind actuator functions

Blind actuators are used for numerous applications. They can, for example, control a roller blind motor, a motorized roof window or an awning. Each channel of a free@home blind actuator can be optimized for one of these applications via the "Function" parameter [4].

Depending on the type of actuator selected, a distinction is made between the displayed icon and the function:

Event		Behavior			
		Roller blind actuator	**Blind actuator**	**Roof window actuator**	**Awning actuator**
Wind alarm	**Occurrence**	Move up and lock	Move up and lock	Close and lock (v)	Retract and lock (∧)
	Cancel	Selectable	Selectable	Selectable	Selectable
Rain alarm	**Occurrence**	Move down and lock	Move up and lock	Close and lock (v)	Retract and lock (∧)
	Cancel	Selectable	Selectable	Selectable	Selectable
Frost alarm	**Occurrence**	Move and block	Move and block	Close and lock (v)	Retract and lock (∧)
	Cancel	Selectable	Selectable	Selectable	Selectable
Force-position (in actions)	**Occurrence**	Selectable (up/down)	Selectable (up/down)	Selectable (up/down)	Selectable (up/down)
	Cancel	Back to position	Back to position	Back to position	Back to position
Window contact	**Window tilted**	–	–	–	–
	Window open	During movement in any direction, ove to the top and block. Without movement, block immediately.	During movement in any direction, ove to the top and block. Without movement, block immediately.	–	–
	Window closed	Retain position	Retain position	–	–

Table 4: Blind actuator functions

Alarm priorities:

Force-position > Wind alarm > Window contact > Frost alarm > Rain alarm.

The following methods can be selected for cancelling an alarm:

- Remain on the position.
- Go back to the previous position.

This method is not selected for every alarm type, but for all alarms of the blind actuator channel.

Rocker settings



Icon of the application

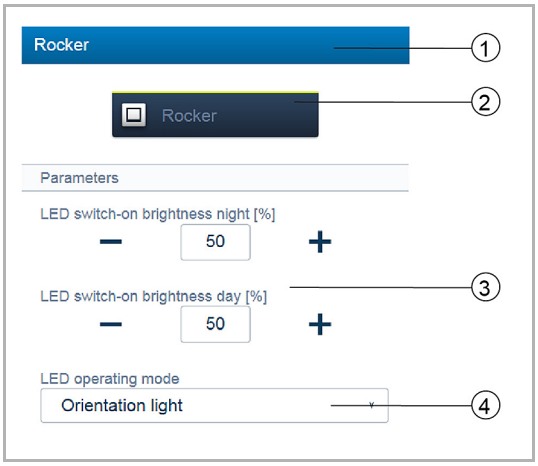

Fig. 18: Rocker settings

[1] Changing the name

[2] Switching of the sensor via the button

[3] Setting the LED night/day switch-on brightness in % via the -/+ buttons

– The parameter specifies how strong the LED lights up percentage wise during night/day.

[4] Selecting the LED operating mode:

- Light for orientation: LED lights up permanently
- Status display: LED lights up during actuation

The following parameter is available immediately for pre-programmed devices.

For all other devices it becomes available only after being linked with an actuator. The setting in the list view is then made via the linking function of the Web-based user interface of the System Access Point.



Fig. 19: Rocker setting after linking with actuator

[5] Selecting the function:

- Control element
- Dimming sensor
- Staircase light sensor
- Force-position sensor On/Off
- Blind sensor
- Blind force-position
- Scene sensor (is visible only when the "Scene sensor" has been selected.
  Long press of the button: "Overwrite scene"/"Retain scene")

NOTE

The parameter only functions when a time profile with the application "LED day / night switchover" is available. The device (channel) must be linked with this application.

Icon of the application

6.3.2 Parameter settings of 2/1gang sensor/blind actuator

Actuator settings

As for 1/1gang.

Sensor settings

As for 1/1gang. However, two rockers (left and right rocker) are displayed in the list view.

Rocker settings

As for 1/1gang. However, the settings are made for two rockers (left rocker and right rocker).

6.4 Links

The sensors and actuators created via the allocation function can now be linked with each other. This allows simple switch-off circuits or two-way circuits to be implemented.



The linking in the list view is made via the linking function of the Web-based user interface of the System Access Point.

Note

For pre-programmed devices (switch actuator units) a link is automatically established between actuator and sensor, since they are combined in the one device.

6.4.1 Linking actuator and sensor

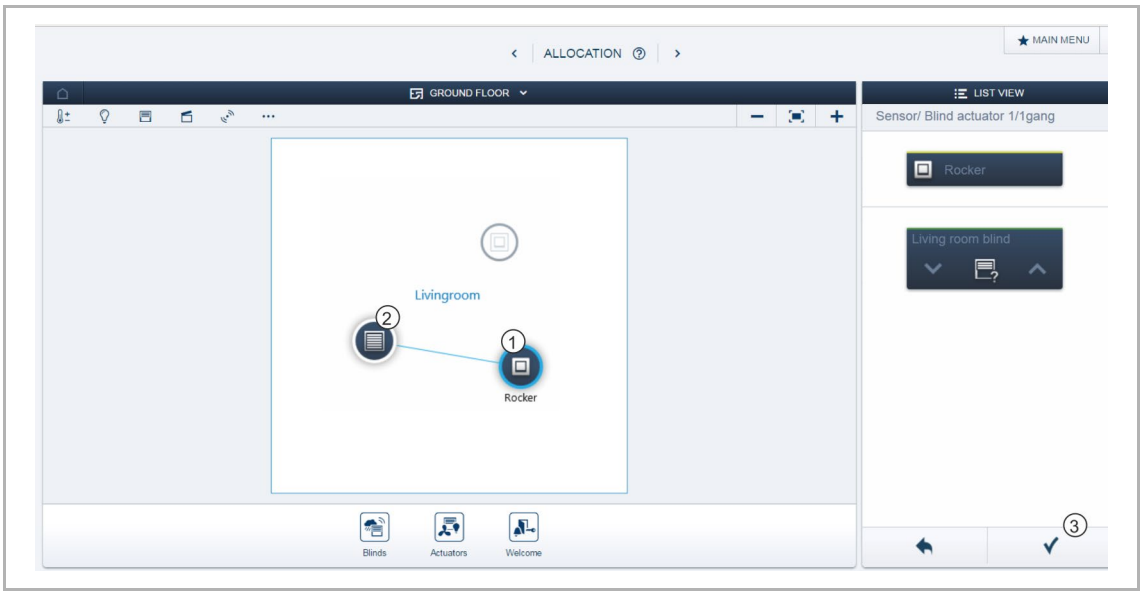

Fig. 20: Linking actuator and sensor

1. On the working area select the sensor [1] that is to be linked with the actuator.
2. Select the actuator [2] that is to be served by the sensor.
3. Press the tick at the bottom right to take over the entries.

A blue connecting line indicates the link between the two devices. The configuration is now transmitted automatically to the devices. The transmission can, depending on the number of affected devices, take a number of seconds. During the transmission a progress bar is displayed around the devices affected.

6.4.2 Linking an actuator with an additional sensor



Fig. 21: Linking an actuator with an additional sensor

1. On the working area select the second sensor [1] that is to be linked with the actuator.
2. Select the actuator [2] that is to be served by the sensor.
3. Press the arrow at the bottom right to take over the entries.

An additional blue connecting line indicates the link between the two devices. After the transmission of the configuration the sensor can be operated directly locally.

7 Update

A firmware update is carried out via the Web-based user interface of the System Access Point.

8 Operation

Operation is carried out by pressing the individual rockers. Their function is fixed via the assigned application or its pre-programming and its parameter settings.

Extensive applications are available for the rockers (control buttons).



Note
The scope of delivery contains only the electronic insert. It must still be completed with a suitable rocker and a cover fame.
Additional information about the switch ranges is available in the electronic catalogue (www.busch-jaeger-catalogue.com).

9 Maintenance

The device is maintenance-free. In case of damage, e.g. during transport or storage), do not perform repairs. Once the device is opened, the warranty is void.

Access to the device must be guaranteed for operation, testing, inspection, maintenance and repairs (according to DIN VDE 0100-520).

9.1 Cleaning



Caution! - Risk of damaging the device!

- When spraying on cleaning agents, these can enter the device through crevices.
  - Do not spray cleaning agents directly onto the device.
- Aggressive cleaning agents can damage the surface of the device.
  - Never use caustic agents, abrasive agents or solvents.

Clean dirty devices with a soft dry cloth.

– If this is insufficient, the cloth can be moistened slightly with a soap solution.

9.2 Diagnosis of faults

If the device does not function correctly, the L leading edge control can be measured via the phase sensor (L) and determined whether the device carries current after being connected. If it carries current, the cause of the fault is not the electronic insert.

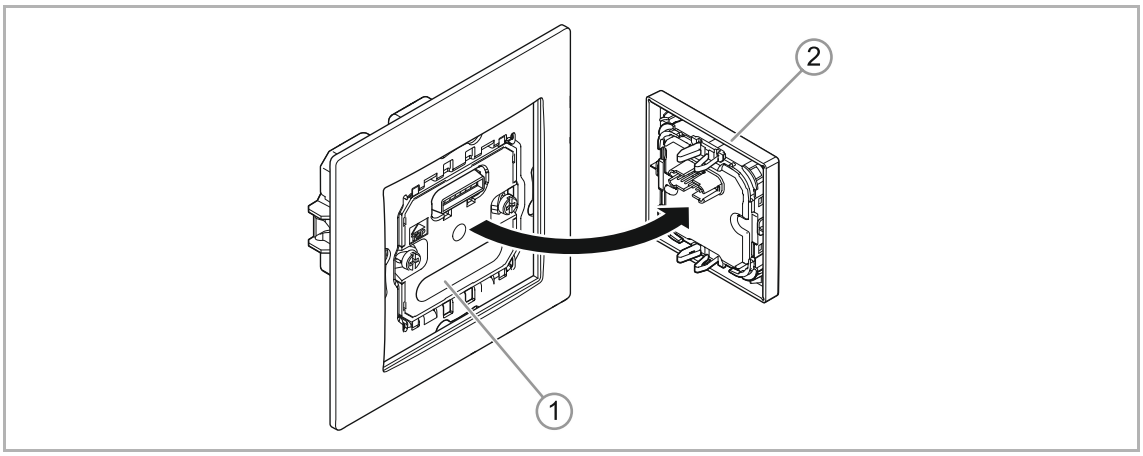

Fig. 22: Phase sensing L

1. Pull off the rocker and the sensor [2].
2. Feed the probe of the ammeter into the phase sensor L [1].

The measuring device indicates whether the device carries current.

10 Notes

11 Index

A

Actuator ... 8
Add device ... 19
Allocation of devices ... 19

C

Circuit diagrams ... 13, 14
Cleaning ... 34
Commissioning ... 16
Connection and installation ... 11

D

Device overview ... 9
Diagnosis of faults ... 35
Dimensional drawings ... 10

E

Environment ... 6

F

Firmware update ... 32
Functions ... 8

I

Identification ... 21
Identification label ... 21
Improper use ... 5
Information and symbols used ... 4
Information on the manual ... 3
Installation ... 14
Intended use ... 5

L

LED ... 7
Liability ... 3
Links ... 30
  actuator ... 30
  Additional sensors ... 31
  sensor ... 30

M

Maintenance ... 34

N

Notes ... 36

O

Operation ... 33
Overview of types ... 8

P

Parameter settings
  Sensor/blind actuator, 1/1gang ... 25
  Sensor/blind actuator, 2/1gang ... 29
Planning instructions ... 11
Protection type ... 10

Q

Qualification of personnel ... 5

S

Safety ... 4
Safety instructions ... 6, 12
Scope of supply ... 8
Select device ... 24
Sensor ... 8
Serialnumber ... 21
Setup and function ... 7
Specifying a name ... 23
System Access Point ... 16
  Coupling with wireless devices ... 17

T

Target group ... 5
Technical data ... 10
Temperature
  ambient ... 10
  storage ... 10

U

Update ... 32

W

Wireless device
  Factory settings ... 17

A member of the ABB Group

Busch-Jaeger Elektro GmbH
PO box
58505 Lüdenscheid

Freisenbergstraße 2
58513 Lüdenscheid

www.BUSCH-JAEGER.de
info.bje@de.abb.com

Central sales service:
Tel.: +49 2351 956-1600
Fax: +49 2351 956-1700

Notice
We reserve the right to make technical changes at all times as well as changes to the contents of this document without prior notice. The detailed specifications agreed upon apply for orders. ABB accepts no responsibility for possible errors or incompleteness in this document.

We reserve all rights to this document and the topics and illustrations contained therein. The document and its contents, or extracts thereof, must not be reproduced, transmitted or reused by third parties without prior written consent by ABB

Product manual 2CKA001473B9187

Copyright© 2018 Busch-Jaeger Elektro GmbH
All rights reserved

BUSCH-JAEGER