# SERVICE MANUAL

# ABS730X



# CONTENTS


1. SAFETY PRECAUTIONS ..... 1

2. PREVENTION OF ELECTRO STATIC DISCHARGE(ESD)TO ELECTROSTATICALLY SENSITIVE(ES)DEVICES ..... 1

3. CONTROL BUTTON LOCATIONS AND EXPLANATIONS ..... 2

4. PREVERTION OF STATIC ELECTRICITY DISCHARGE ..... 3

5. ASSEMBLING AND DISASSEMBLING THE MECHANISM UNIT ..... 4

5.1 OPTICAL PICKUP UNIT EXPLOSED VIEW AND PART LIST ..... 5

5.2 MISCELLANEOUS ..... 5

6. ELECTRICAL CONFIRMATION ..... 6

6.1 VIDEO OUTPUT (LUMINANCE SIGNAL) CONFIRMATION ..... 6

6.2 VIDEO OUTPUT(CHROMINANCE SIGNAL) CONFIRMATION ..... 7

7. AML3298 ..... 8

8. SCHEMATIC & PCB WIRING DIAGRAM ..... 11

9. SPARE PARTS LIST ..... 35

# 1. SAFETY PREAUTIONS

**1.1 GENERAL GUIDELINES**

**1. When servicing, observe the original lead dress. if a short circuit is found, replace all parts which have been overheated or damaged by the short circuit.**

**2. After servicing, see to it that all the protective devices such as insulation barrier, insulation papers shields are properly installed.**

**3. After servicing, make the following leakage current checks to prevent the customer from being exposed to shock hazards.**

# 2.PREVENTION OF ELECTRO STATIC DISCHARGE(ESD)TO ELECTROSTATICALLY SENSITIVE(ES)DEVICES

**Some semiconductor(solid state)devices can be damaged easily by static electricity. Such components commonly are called Electrostatically Sensitive(ES)Devices. Examples of typical ES devices are integrated circuits and some field-effect transistors and semiconductor chip components. The following techniques should be used to help reduce the incidence of component damage caused by electro static discharge(ESD).**

**1. Immediately before handling any semiconductor component or semiconductor-equipped assembly, drain off any ESD on your body by touching a known earth ground. Alternatively, obtain and wear a commercially availabel discharging ESD wrist strap, which should be removed for potential shock reasons prior to applying power to the unit under test.**

**2. After removing an electrical assembly equipped with ES devices,place the assembly on a conductive surface such as alminum foil, to prevent electrostatic charge buildup or exposure of the assembly.**

**3. Use only a grounded-tip soldering iron to solder or unsolder ES devices.**

**4. Use only an anti-static solder removal device. Some solder removal devices not classified as anti-static (ESD protected)can generate electrical charge sufficient to damage ES devices.**

**5. Do not use freon-propelled chemicals. These can generate electrical charges sufficient to damage ES devices.**

**6. Do not remove a replacement ES device from its protective package until immediately before you are ready to install it. (Most replacement ES devices are packaged with leads electrically shorted together by conductive foam, alminum foil or comparable conductive material).**

**7. Immediately before removing the protective material from the leads of a replacement ES device, touch the protective material to the chassis or circuit assembly into which the device will be installed.**

**Caution**

**Be sure no power is applied to the chassis or circuit, and observe all other safety precautions.**

**8. Minimize bodily motions when handling unpackaged replacement ES devices. (Otherwise harmless motion such as the brushing together of your clothes fabric or the lifting of your foot from a carpeted floor can generate static electricity(ESD).**

notice (1885x323x2 tiff)

**IMPORTANT SAFETY NOTICE**

There are special components used in this equipment which are imporant for safety.
These parts are marked by ⚠ in the schematic diagrams, Exploded Views and replacement parts list. It is essential that these critical parts should be replaced with manufacturer's specified parts to prevent shock, fire, or other hazards. Do not modify the original design without permission of manufacturer.

# Control Button Locations and Explanations

• Front Panel Illustration 1

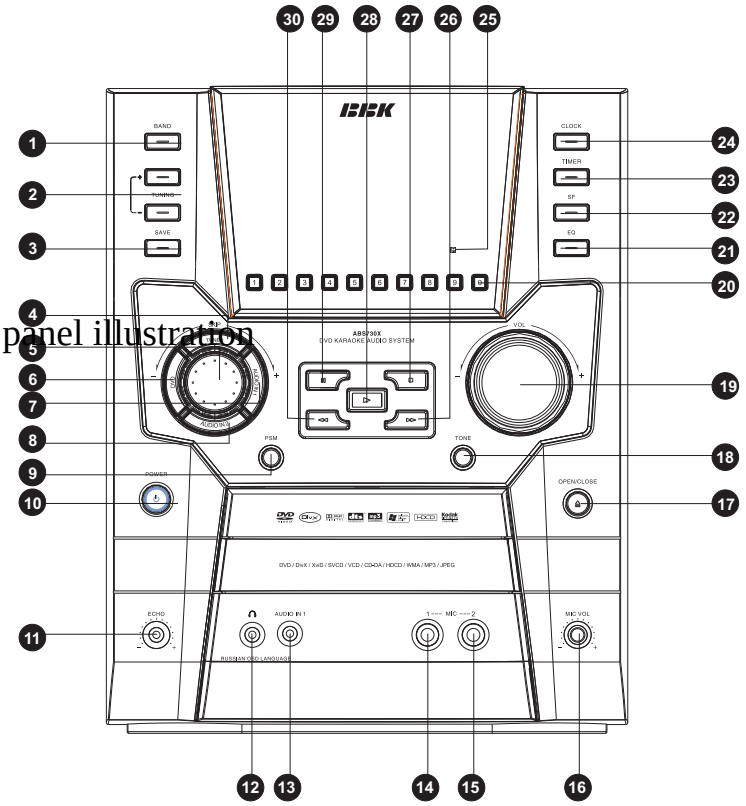


Rear panel illustration

1. BAND switch
2. TUNING+ -
3. SAVE button
4. TUNER button
5. SKIP knob
6. DVD button
7. AUDIO IN 1 button
8. AUDIO IN 2 button
9. PSM button
10. Power switch
11. Echo button
12. Headphone jack
13. Audio in 1
14. MIC 1 jack
15. MIC 2 jack
16. MIC VOL knob
17. OPEN/CLOSE button
18. TONE button
19. VOL +/- button
20. Number buttons
21. EQ button
22. SF button
23. TIMER button
24. CLOCK button
25. IR sensor
26. FWD button
27. STOP button
28. PLAY button
29. PAUSE button
30. REW button

# 4.PREVENTION OF STATIC ELECTRICITY DISCHARGE

The laser diode in the traverse unit (optical pickup)may brake down due to static electricity of clothes or human body. Use due caution to electrostatic breakdown when servicing and handling the laser diode.

**4.1.Grounding for electrostatic breakdown prevention**

Some devices such as the DVD player use the optical pickup(laser diode)and the optical pickup will be damaged by static electricity in the working environment.Proceed servicing works under the working environment where grounding works is completed.

**4.1.1. Worktable grounding**

1. Put a conductive material(sheet)or iron sheet on the area where the optical pickup is placed,and ground the sheet.

**4.1.2.Human body grounding**

1 Use the anti-static wrist strap to discharge the static electricity from your body.

safety_3 (1577x409x2 tiff)

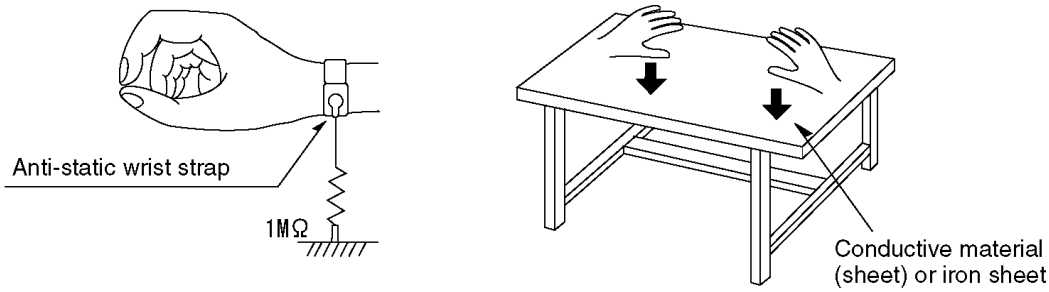


**4.1.3.Handling of optical pickup**

**1. To keep the good quality of the optical pickup maintenance parts during transportation and before installation, the both ends of the laser diode are short-circuited.After replacing the parts with new ones, remove the short circuit according to the correct procedure. (See this Technical Guide).**

**2. Do not use a tester to check the laser diode for the optical pickup .Failure to do so willdamage the laser diode due to the power supply in the tester.**

**4.2. Handling precautions for Traverse Unit (Optical Pickup)**

**1. Do not give a considerable shock to the traverse unit(optical pickup)as it has an extremely high-precise structure.**

**2. When replacing the optical pickup, install the flexible cable and cut is short land with a nipper. See the optical pickup replacement procedure in this Technical Guide. Before replacing the traverse unit, remove the short pin for preventingstatic electricity and install a new unit.Connect the connector as short times as possible.**

**3. The flexible cable may be cut off if an excessive force is applied to it.Use caution when handling the cable**

**4. The half-fixed resistor for laser power adjustment cannot be adjusted. Do not turn the resistor.**

# 5. Assembling and disassembling the mechanism unit

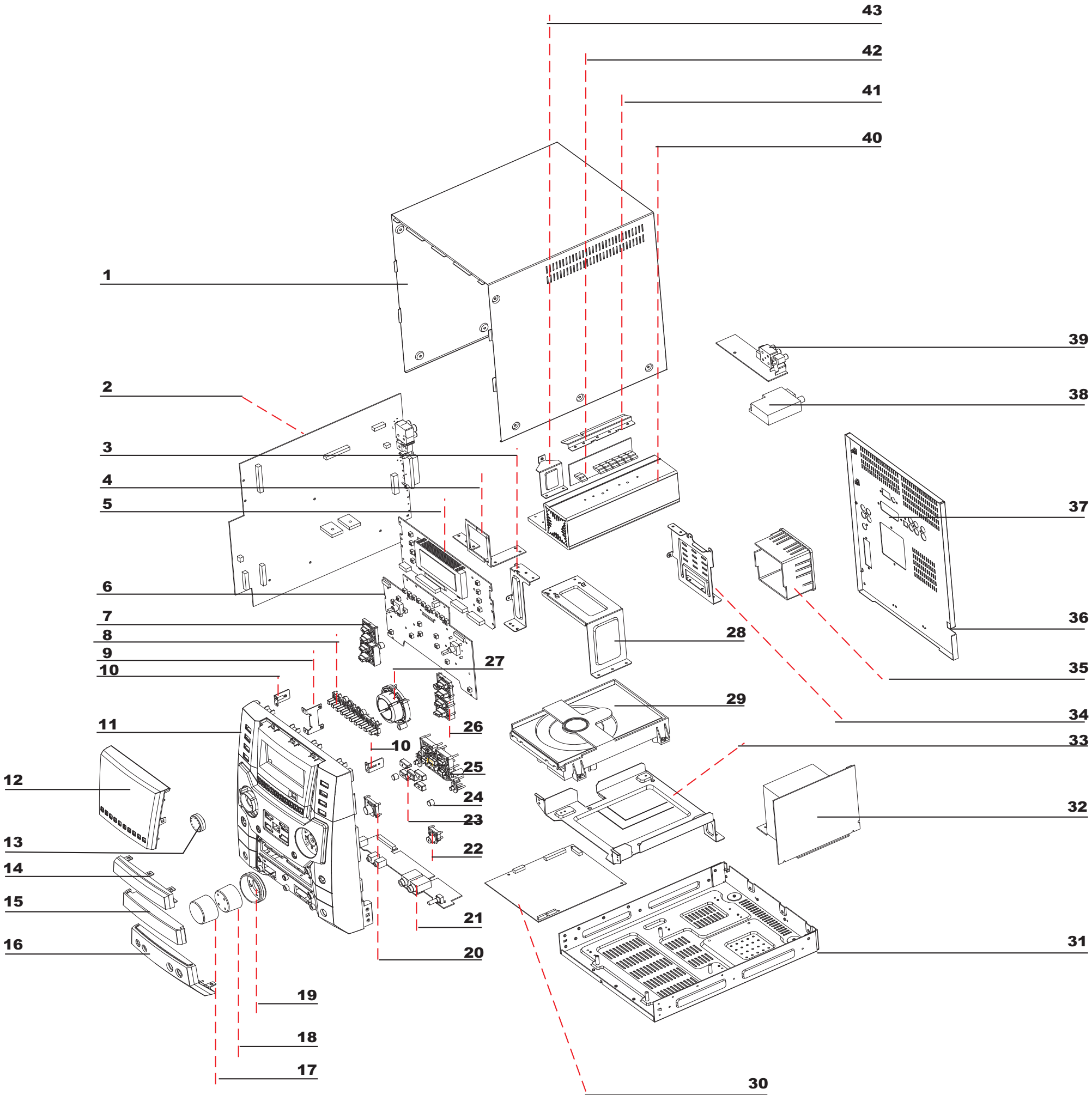


## 5.1 Optical pickup unit explosed view and partlist

1 Upper cover
2 Power amplifier PCB
3 Left bracket of heat radiator
4 Backing plate
5 Display PCB
6 Front panel PCB
7 Left function button
8 Number button
9 PCB  bracket
10 Bracket of upper casing
11 Surface casing
12 Display glass
13 Left function button
14 Upper decorative board
15 Door
16 Lower decorative board
17 Knob cover
18 Volume knob
19 Light conduct ring
20 Power button
21 MIC PCB
22 Open button
23 Cap of function button
24 Decorative button
25 5-direction function button
26 Right function knob
27 4-direction function button
28 Right bracket of heat radiator
29 Loader
30 Decode board
31 Bottom board
32 Power board
33 Loader bracket
34 Rear bracket of heat radiator
35 Cover for ventilation of heat radiator
36 Power cord
37 Rear board
38 Tuner
39 Output board
40 Heat radiator
41 IC press plate
42 Supplementary power board
43 Power amplifier PCB bracket

## 5.2 MISCELLANEOUS

### 5.2.1 Protection of the LD(Laser diode)

Short the parts of LD circuit pattern by soldering.

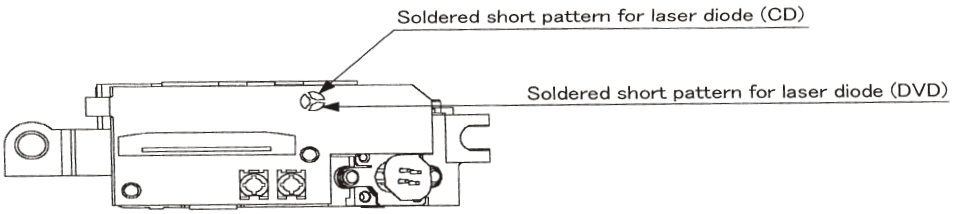


### 5.2.2 Cautions on assembly and adjustment

Make sure that the workbenches,jigs,tips,tips of soldering irons and measuring instruments are grounded,and that personnel wear wrist straps for ground.

Open the LD shortlands quickly with a soldering iron after a circuit is connected.

Keep the power source of the pick-up protected from internal and external sources of electrical noise.

Refrain from operation and storage in atmospheres containing corrosive gases (such as H2S,SO2, NO2 and Cl2)or toxic gases or in locations containing substances(especially from the organic silicon,cyan, formalin and phenol groups)which emit toxic gases.It is particularly important to ensure that none of the above substances are present inside the unit.Otherwise,the motor may no longer run.

# 6.Electrical Confirmation

### 6.1. Video Output (Luminance Signal) Confirmation

DO this confirmation after replacing a P.C.B.

| Measurement point | Mode | Disc |
|---|---|---|
| Video output terminal | Color bar 75%<br>PLAY(Title 46):DVDT-S15<br>PLAY(Title 12):DVDT-S01 | DVDT-S15<br>or<br>DVDT-S01 |
| Measuring equipment,tools | Confirmation value | |
| 200mV/dir,10 μ sec/dir | 1000mVp-p±30mV | |

Purpose:To maintain video signal output compatibility.

1.Connect the oscilloscope to the video output terminal and terminate at 75 ohms.

2.Confirm that luminance signal(Y+S)level is 1000mVp-p±30mV

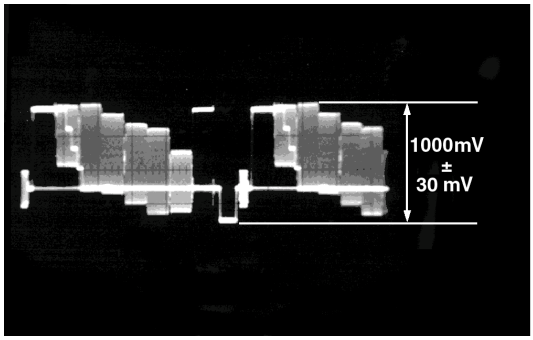

## 6.2 Video Output(Chrominance Signal) Confirmation

Do the confirmation after replacing P.C.B.

| Measurement point | Mode | Disc |
|---|---|---|
| Video output terminal | Color bar 75%<br>PLAY(Title 46):DVDT-S15<br>PLAY(Title 12):DVDT-S01 | DVDT-S15<br>or<br>DVDT-S01 |
| Measuring equipment,tools | Confirmation value | |
| Screwdriver,Oscilloscope<br>200mV/dir,10 μ sec/dir | 621mVp-p±30mV | |

Purpose:To maintain video signal output compatibility.

1.Connect the oscilloscope to the video output terminal and terminate at 75 ohme.

2.Confirm that the chrominance signal(C)level is 621 mVp-p±30mV

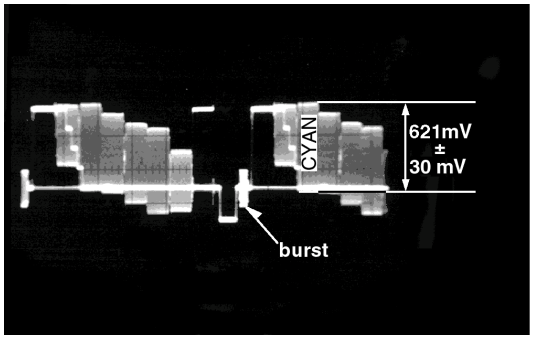

7. AML3298

# 1 Overview

The AML3298 A/V processor is a completely integrated system targeting all types of Audio/Video decoder applications that provide connectivity to hard disk, digital camera, MP3 players and other external digital consumer devices. The target market for AML3298 A/V processor is feature rich DVD players, audio receivers, DVD/receiver combo players, digital media players, portable DVD players, and portable media players.

The AML3298 combines full function of MPEG-1, MPEG-2 and MPEG-4 decoding, numerous dedicated and general-purpose peripherals, and a high speed 32-bit host CPU in a single device. The AML3298 has two built-in AMRISC™ RISC processors with special instructions to accommodate audio and video digital signal processing. The AML3298 also provides a high speed interface to external USB 1.1/2.0 chip for connectivity to popular USB devices like hard disk, Flash memory, digital camera and MP3 players.

The embedded 32-bits host CPU handles system initialization, DVD navigation, and other system applications. The AML3298 A/V processor provides a glueless interface to all external components: ATAPI loaders, USB interface chip, audio DACs and memory. Numerous general-purpose I/O pins can be used to control the front panel display and other miscellaneous tasks. The Flash interface allows the Flash memory to be shared with the front-end chip to reduce system cost in mono-board designs. Together, the embedded host CPU and special glueless interfaces reduce the total system cost for all A/V applications from any media.

The AML3298 A/V processor also integrates an NTSC/PAL TV encoder that supports S-Video, composite, YUV component and RGB. The video encoder also supports high-quality de-interlaced progressive scan (480p/576p) with full Macrovision support. Contrast enhancement, hue adjustment, video scaling, video interpolation, pan-scan, letter-box, and zoom are also supported. In addition, four built in video DACs complement the video encoder further reducing system cost. In addition, the AML3288 devices can also provide CCIR601 and VGA video output.

The integrated AMRISC™ RISC processor is designed to support advanced digital audio processing. The micro-coded engine provides support for all existing audio formats and it also has enough flexibility to accommodate new audio standards. Popular audio formats like Dolby AC-3 5.1, HDCD, MP-3 and WMA are supported. In addition, SPDIF (IEC958) input and outputs are supported.

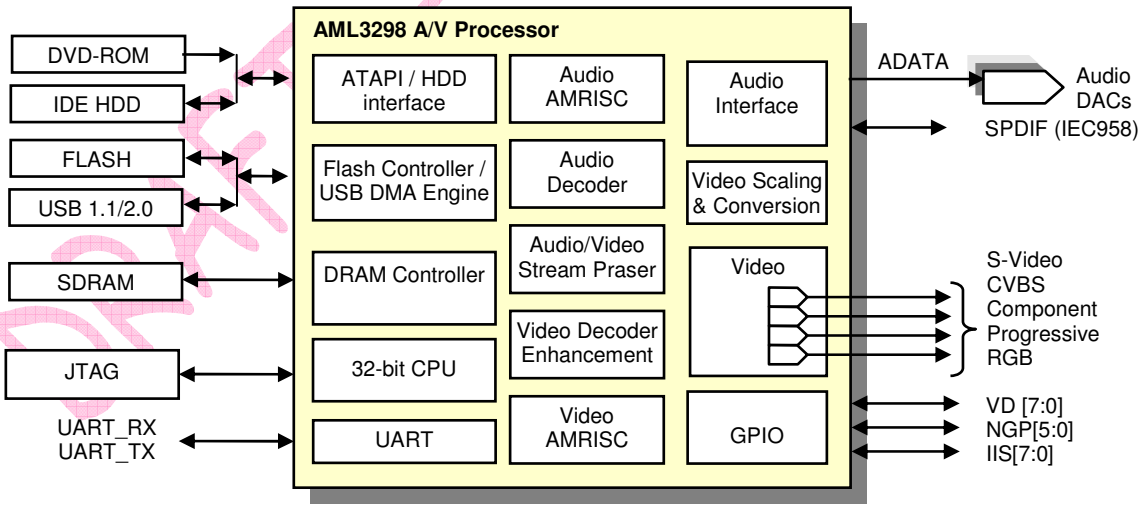


**Figure 1 AML3298 Block Diagram**

DRAFT DO NOT COPY

# 2 Features

## MPEG 1/2/4 Decoding

- MPEG-4 and Divx 3.x/4.x/5.x complaint
- MPEG-2 ML/MP conforming to ISO-13818
- MPEG-1 ML/MP conforming to ISO-11172
- On-chip CSS descrambler
- Flexible DRM engine for content management
- Compliant with DVD Specification 1.0 for read-only Disc decoding
- Advanced error detection, concealment, and recovery scheme
- Backward compatible VCD (1.0 - 2.0) decoding
- Super VCD decoding
- Built-in AMRISC™ 24-bit 133 MHz RISC CPU with special instruction extensions designed specifically for MPEG decoding

## Video

- Full MPEG-2 main profile @ main level 4:2:0 video decoding
- Advanced pixel based de-interlacing algorithm
- On-Screen-Display (OSD) capable of supporting up to 256 prefixed colors or 16 programmable colors
- OSD Alpha-blending over video display
- Automatic scaling of sub-standard size DivX clips
- Video Zoom in for visual effects
- Built-in full screen NTSC to PAL scaling or vice-versa
- Built-in contrast enhancement and hue adjustment
- Built-in hardware for video interpolation and decimation
- Supports maximum zoom ratio up to 8X

## Graphics

- Anti-flicker hardware for interlaced video
- Supports high speed block move for panning
- Built-in 2D graphics accelerator
- Dedicated graphics display controller separate from MPEG engine for optimal video overlay performance
- Supports NTSC and PAL graphics modes with maximum 64K color
- Video overlay with graphics and vice-versa
- Unified MPEG and graphics memory architecture for maximum flexibility and system cost savings

## Built-in TV encoder

- Quad 10-bit video DACs
- Real-time Interlaced NTSC output 720x480 at 30 fps and PAL 720x576 at 25 fps. Macrovision 7.1L1 anti-taping process
- NTSC Progressive output (480p) at 60fps, PAL Progressive (576p) at 50fps. Macrovision 1.03 anti-taping process
- Interlaced: S-Video, component, composite and SCART output
- Close caption
- Progressive RGB

## Audio

- Built-in AMRISC™ RISC CPU with extensions specifically designed for Audio Processing
- Compliant with Dolby AC-3 5.1 channel decoding
- AC-3 two channel down-mixing
- SPDIF (IEC958) input and output
- Full MPEG audio layers I, II and III (MP3)
- Supports 8 channel linear PCM output
- DTS, HDCD, MP3 and WMA

## Built-in Host CPU

- 133Mhz 32-bit CPU dedicated for user applications
- Embedded debug interface using ICE/JTAG
- Able to utilize MPEG SDRAM as run time data storage for minimal system cost
- Configurable for 16-bit wide SDRAM
- Support 8 or 16-bit FLASH
- FLASH memory can be shared with Front-End chips

## Peripherals and Interface

- High speed (DMA) direct connection to third party USB chip
- Supports glueless interface to DVD DSP, CD DSP, and DVD-ROM devices
- Direct connection to Audio DACs using $I^2S$
- General Purpose I/O pins
- IDE with DMA transfer supporting up to 2 IDE devices such as ATAPI DVD-ROM and IDE hard disk
- ISA interface

## Miscellaneous

- 208-pin PQFP
- 1.8V operating voltage, 5V tolerant inputs, 3.3V output

DRAFT - DO NOT COPY

# 3 AML3298 – 208 Pin Package Diagram

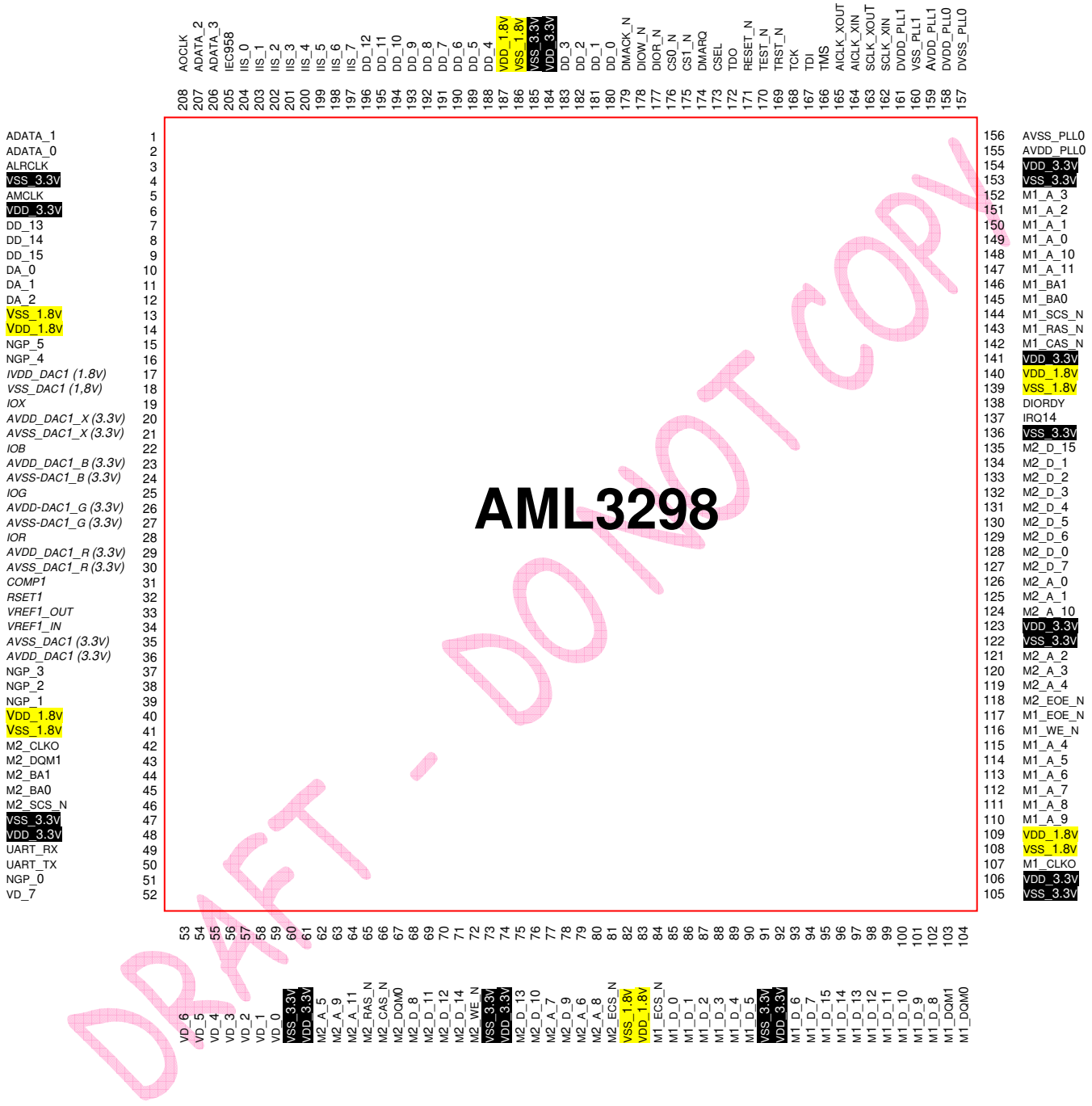


DRAFT - DO NOT COPY

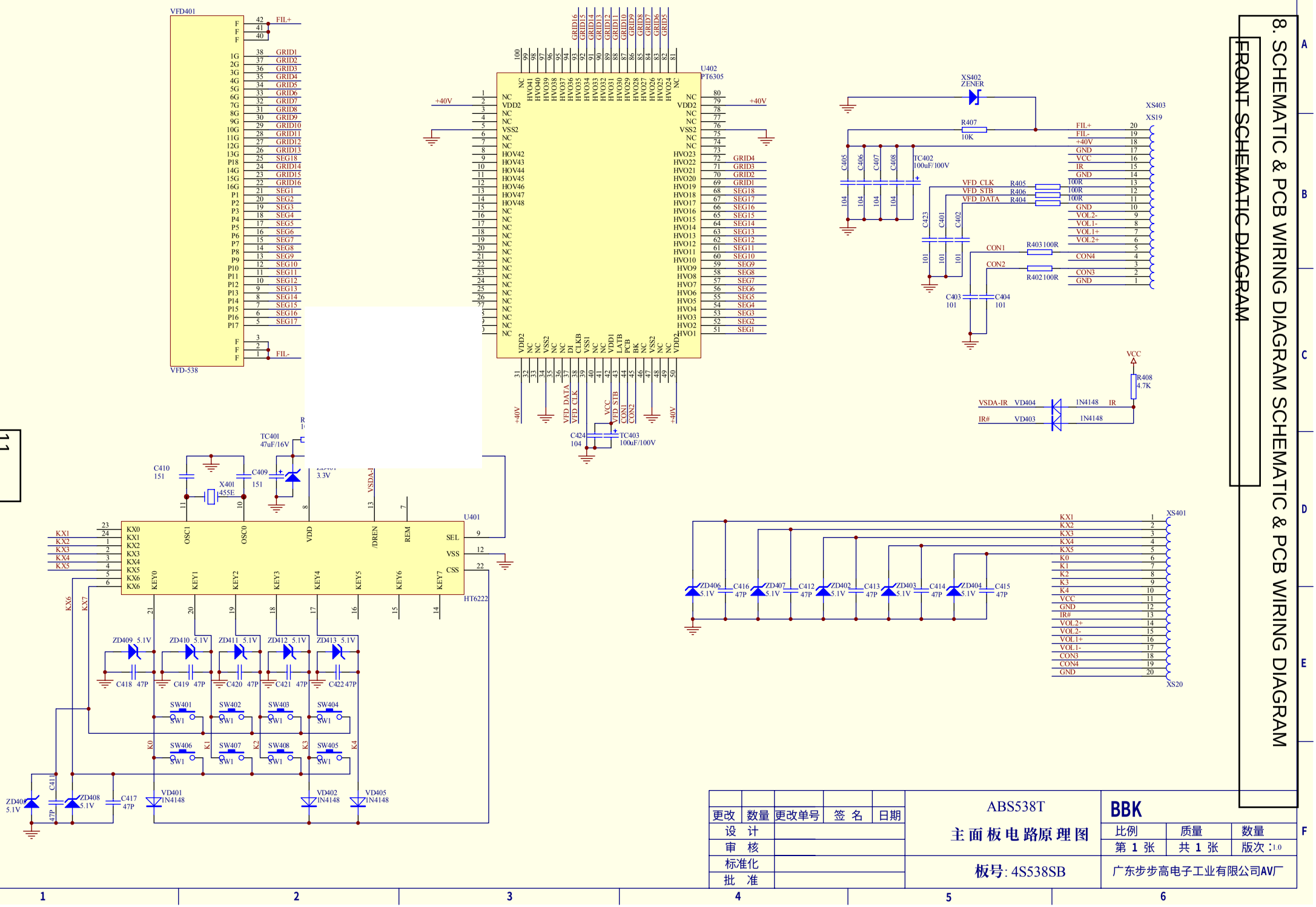
8. SCHEMATIC & PCB WIRING DIAGRAM SCHEMATIC & PCB WIRING DIAGRAM
FRONT SCHEMATIC DIAGRAM
11
VFD401
VFD-538
U402
PT6305
U401
HT6222
XS402
ZENER
XS403
XS19
XS401
XS20
TC401
47uF/16V
TC402
100uF/100V
TC403
100uF/100V
X401
455E
R407
10K
R408
4.7K
VFD_CLK
VFD_STB
VFD_DATA
CON1
CON2
VSDA-IR
IR#
VD404
VD403
1N4148
ABS538T
主面板电路原理图
板号: 4S538SB
BBK
广东步步高电子工业有限公司AV厂
比例
质量
数量
第 1 张
共 1 张
版次 :1.0
更改
数量
更改单号
签 名
日期
设 计
审 核
标准化
批 准

FRONT SCHEMATIC DIAGRAM

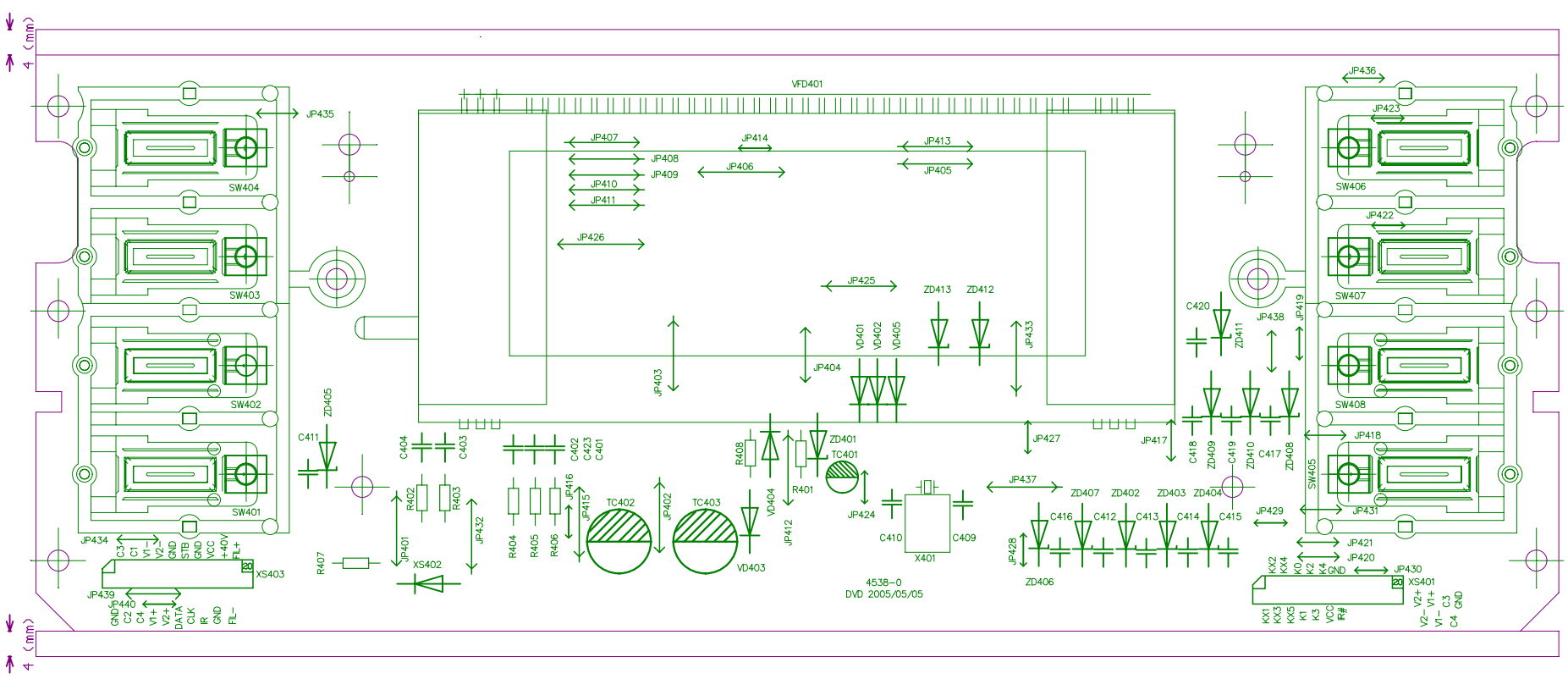

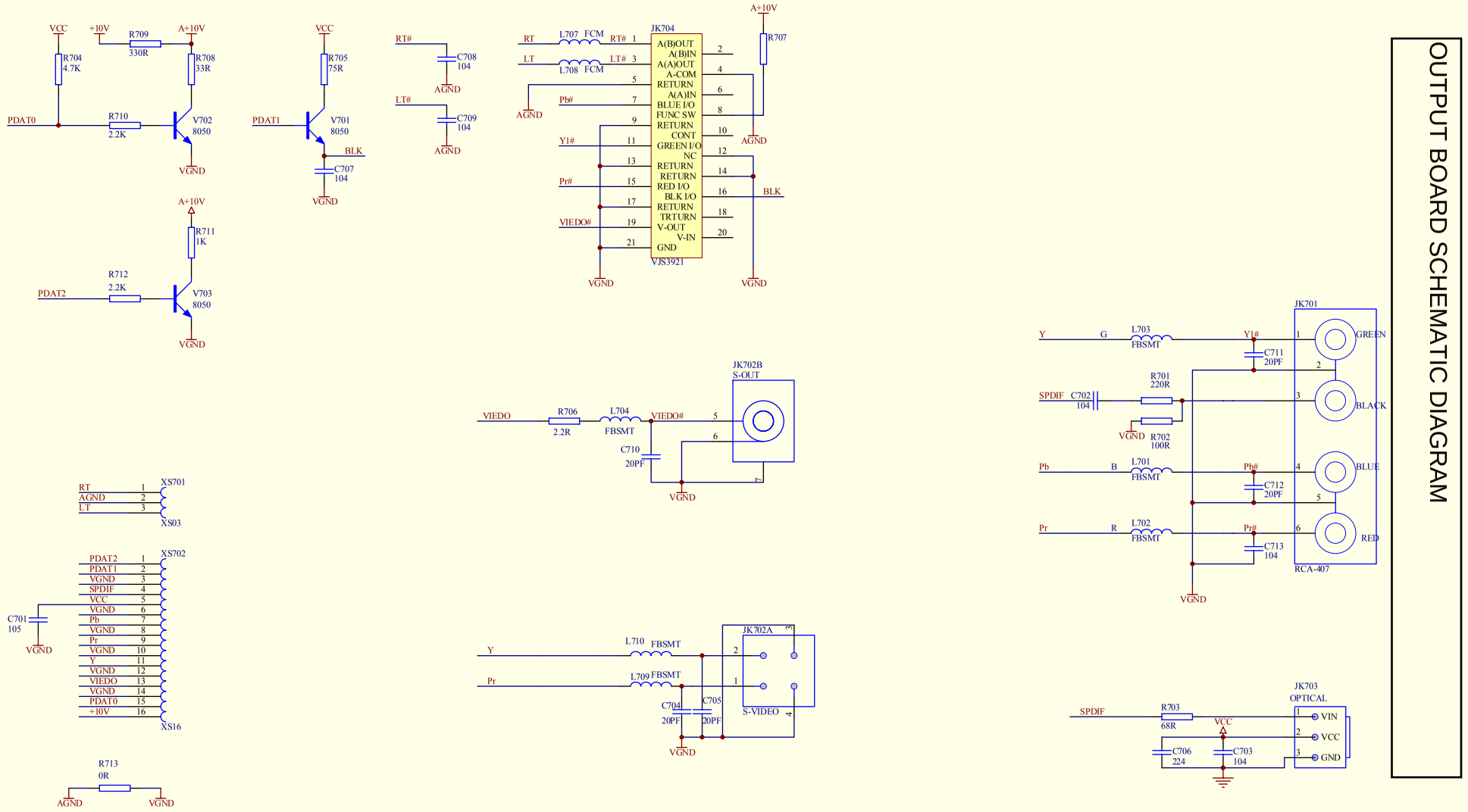
OUTPUT BOARD SCHEMATIC DIAGRAM
VCC
+10V
R709
330R
A+10V
R704
4.7K
R708
33R
PDAT0
R710
2.2K
V702
8050
VGND
R705
75R
PDAT1
V701
8050
BLK
C707
104
RT#
C708
104
AGND
LT#
C709
104
JK704
RT
L707 FCM
RT#
LT
L708 FCM
LT#
Pb#
Y1#
Pr#
VIEDO#
A(B)OUT
A(B)IN
A(A)OUT
A-COM
RETURN
A(A)IN
BLUE I/O
FUNC SW
RETURN
CONT
GREEN I/O
NC
RETURN
RETURN
RED I/O
BLK I/O
RETURN
TRTURN
V-OUT
V-IN
GND
VJS3921
R707
R711
1K
R712
2.2K
V703
8050
JK702B
S-OUT
VIEDO
R706
2.2R
L704
FBSMT
C710
20PF
JK701
Y
G
L703
FBSMT
C711
20PF
GREEN
SPDIF
C702
104
R701
220R
BLACK
R702
100R
Pb
B
L701
FBSMT
C712
20PF
BLUE
Pr
R
L702
FBSMT
C713
104
RED
RCA-407
XS701
RT
AGND
LT
XS03
XS702
PDAT2
PDAT1
VGND
SPDIF
VCC
Pb
Pr
Y
VIEDO
PDAT0
+10V
XS16
C701
105
R713
0R
JK702A
L710 FBSMT
L709 FBSMT
C704
20PF
C705
20PF
S-VIDEO
JK703
OPTICAL
R703
68R
C706
224
C703
104
VIN
GND
13
更改
数量
更改单号
签 名
日期
设 计
审 核
标准化
批 准
ABS538S
AV 输出板原理图
板号: 7538-0
BBK
比例 1:1
质量
数量
第 1 张
共 1 张
版次 :1.0
广东步步高电子工业有限公司AV厂

# OUTPUT BOARD SCHEMATIC DIAGRAM

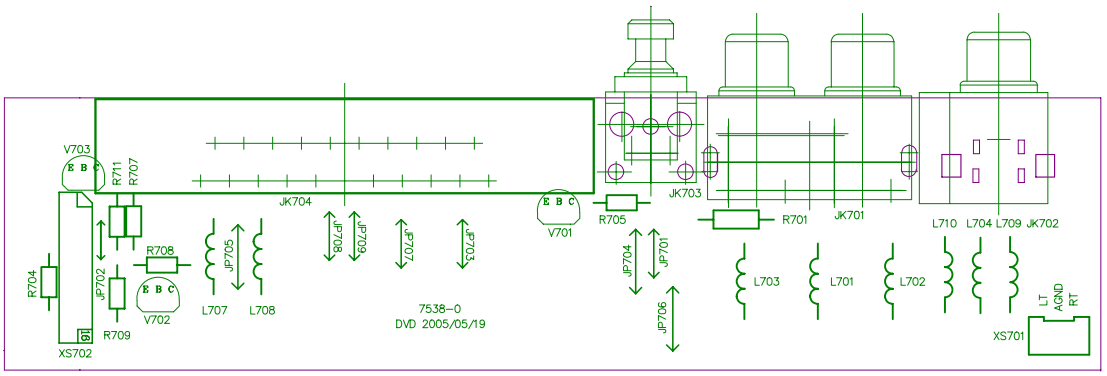

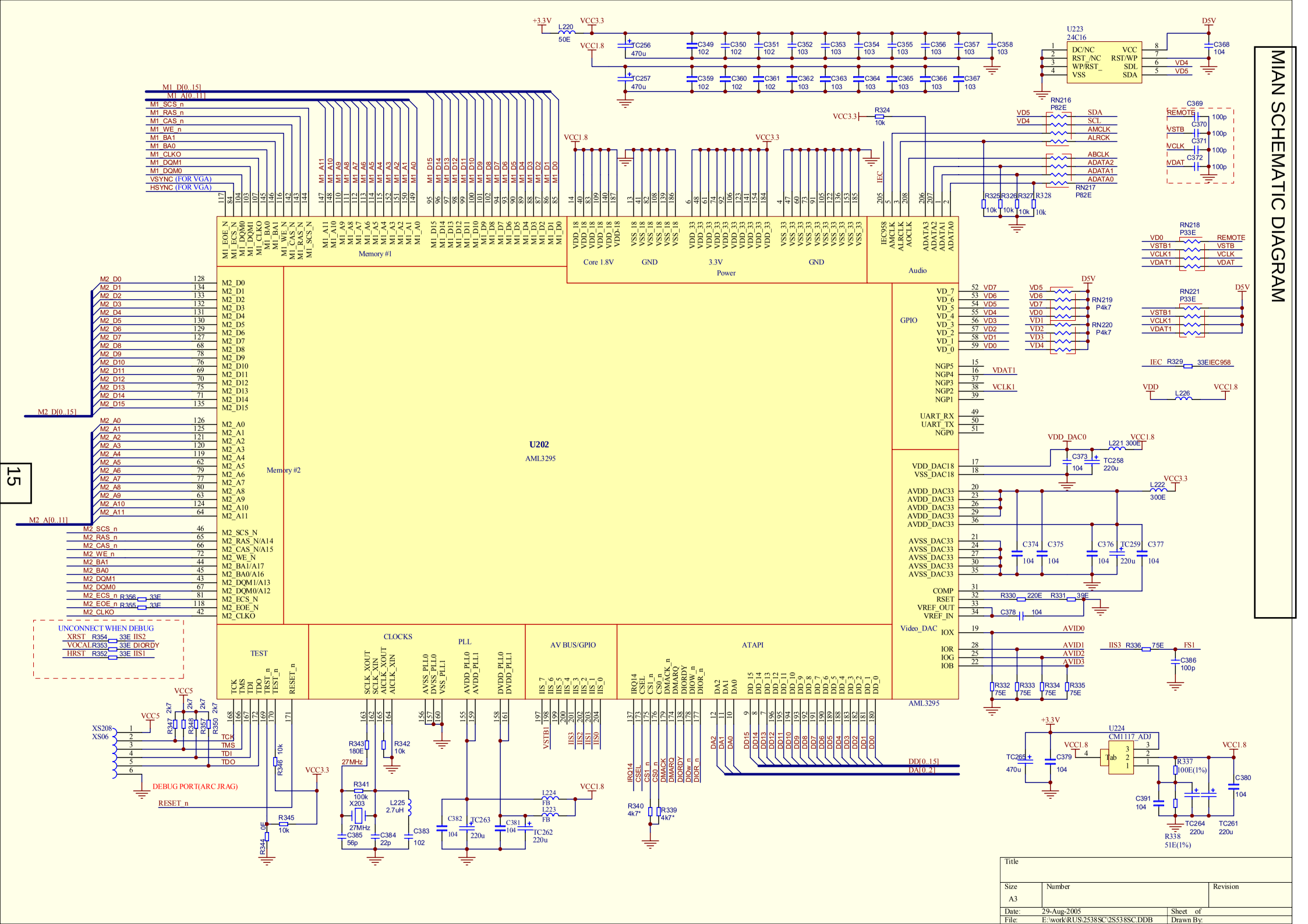
MIAN SCHEMATIC DIAGRAM
15
U202
AML3295
Memory #1
Memory #2
Core 1.8V
GND
3.3V
GND
Power
Audio
GPIO
TEST
CLOCKS
PLL
AV BUS/GPIO
ATAPI
Video_DAC
AML3295
M1_D[0..15]
M1_A[0..11]
M2_D[0..15]
M2_A[0..11]
UNCONNECT WHEN DEBUG
XRST R354 33E IIS2
VOCAL R353 33E DIORDY
HRST R352 33E IIS1
DEBUG PORT(ARC JRAG)
RESET_n
U223
24C16
U224
CM1117_ADJ
RN216 P82E
RN217 P82E
RN218 P33E
RN219 P4k7
RN220 P4k7
RN221 P33E
IEC R329 33EIEC958
L220 50E
L221 300E
L222 300E
L223 FB
L224 FB
L225 2.7uH
L226
X203 27MHz
27MHz
R324 10k
R325 10k
R326 10k
R327 10k
R328 10k
R330 220E
R331 39E
R336 75E
R337 100E(1%)
R338 51E(1%)
R339 4k7*
R340 4k7*
R341 100k
R342 10k
R343 180E
R345 10k
R346 10k
R347 2k7
R348 2k7
R349 2k7
R350 2k7
R356 33E
R355 33E
C256 470u
C257 470u
C258 220u
C259 220u
C261 220u
C262 220u
C263 220u
C264 220u
C379 470u
C384 22p
C385 56p
C386 100p
C391 104
TC265 470u
Title
Size A3
Number
Revision
Date: 29-Aug-2005
Sheet of
File: E:\work\RUS\2538SC\2S538SC.DDB
Drawn By:

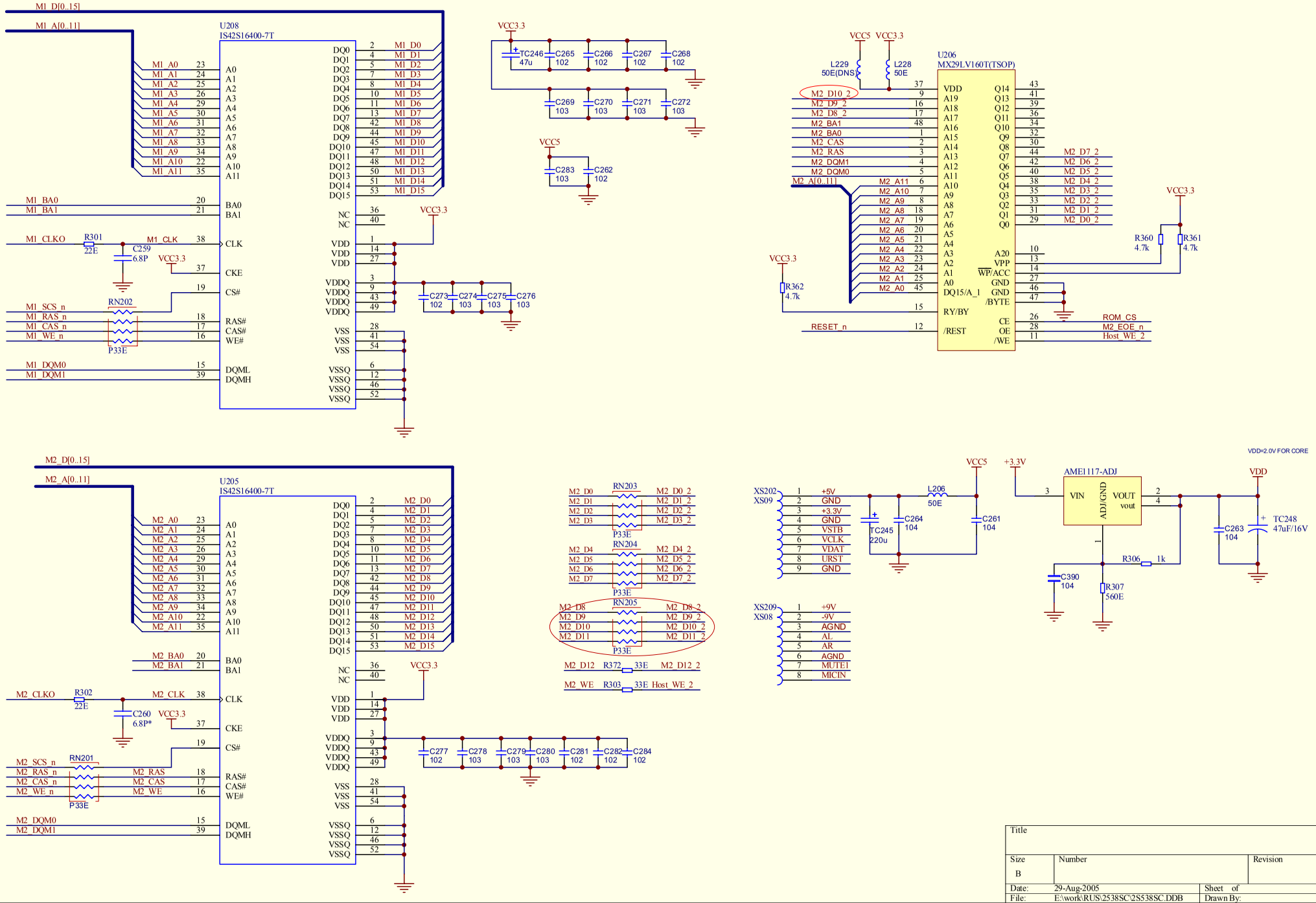


16

| | | |
|---|---|---|
| Title | | |
| Size: B | Number | Revision |
| Date: 29-Aug-2005 | | Sheet of |
| File: E:\work\RUS\2538SC\2S538SC.DDB | | Drawn By: |

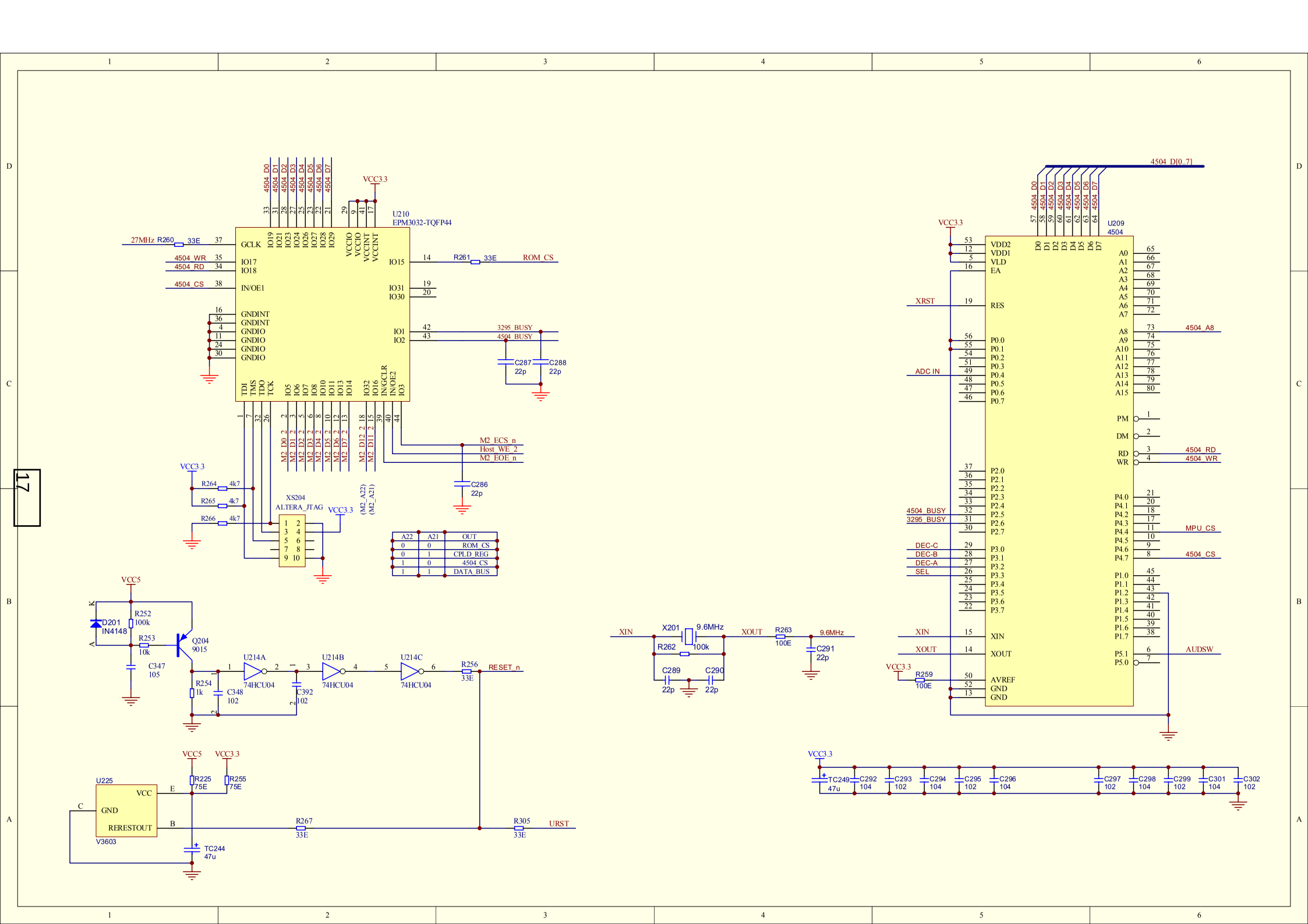
U210
EPM3032-TQFP44
27MHz R260
33E
4504_WR
4504_RD
4504_CS
R261
33E
ROM_CS
3295_BUSY
4504_BUSY
C287
22p
C288
22p
M2_ECS_n
Host_WE_2
M2_EOE_n
C286
22p
VCC3.3
R264
4k7
R265
4k7
R266
4k7
XS204
ALTERA_JTAG
A22 A21 OUT
0 0 ROM_CS
0 1 CPLD_REG
1 0 4504_CS
1 1 DATA_BUS
VCC5
D201
IN4148
R252
100k
R253
10k
Q204
9015
C347
105
U214A
U214B
U214C
74HCU04
R254
1k
C348
102
C392
102
R256
33E
RESET_n
U225
V3603
VCC
GND
RERESTOUT
R225
75E
R255
75E
R267
33E
R305
33E
URST
TC244
47u
XIN
X201
9.6MHz
R262
100k
C289
22p
C290
22p
XOUT
R263
100E
9.6MHz
C291
22p
4504_D[0..7]
U209
4504
VDD2
VDD1
VLD
EA
RES
XRST
ADC IN
PM
DM
RD
WR
4504_RD
4504_WR
4504_A8
4504_BUSY
3295_BUSY
MPU_CS
4504_CS
DEC-C
DEC-B
DEC-A
SEL
AUDSW
AVREF
GND
R259
100E
TC249
47u
C292
104
C293
102
C294
104
C295
102
C296
104
C297
102
C298
104
C299
102
C301
104
C302
102

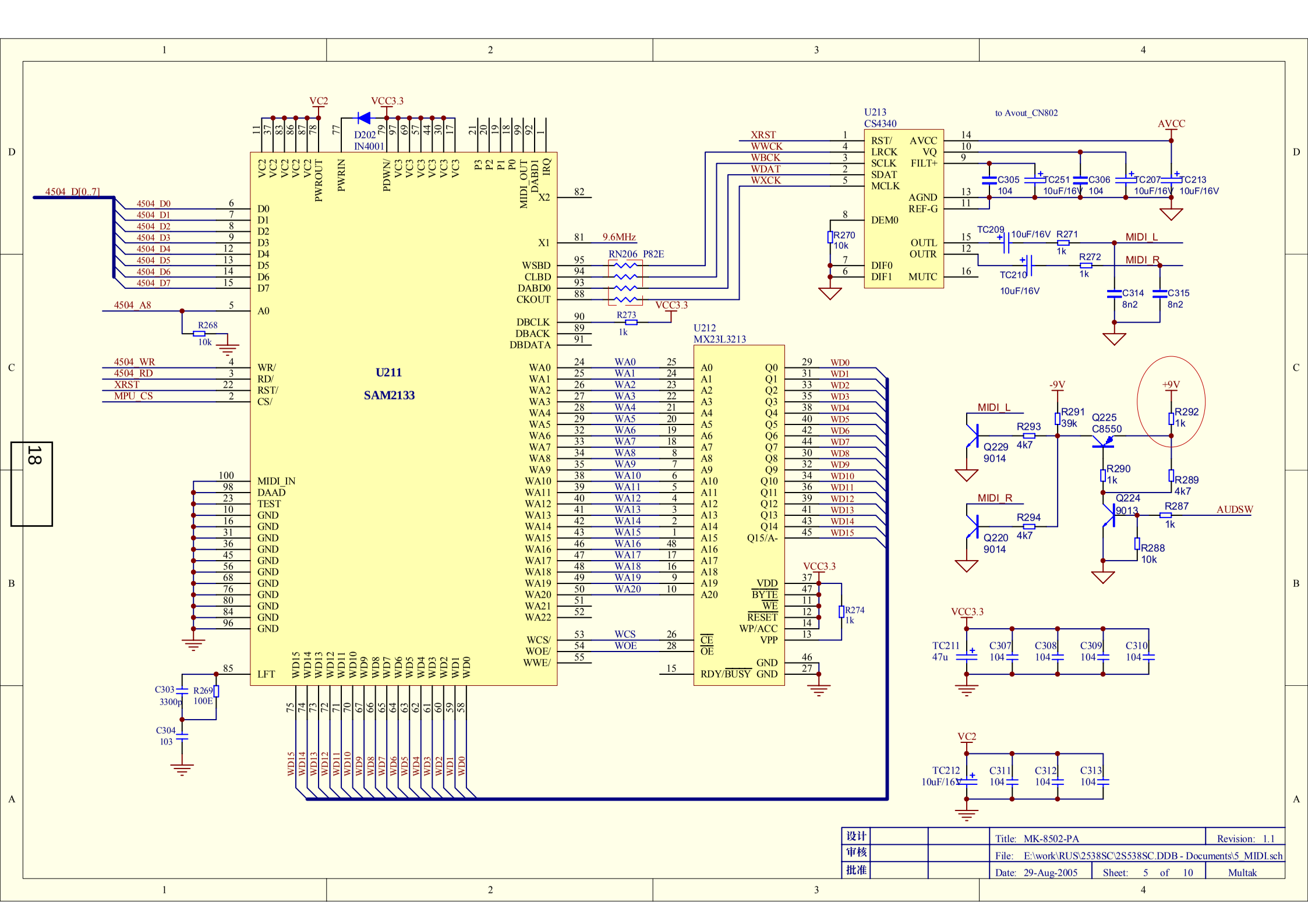
U211
SAM2133
U212
MX23L3213
U213
CS4340
to Avout_CN802
4504_D[0..7]
4504_A8
4504_WR
4504_RD
XRST
MPU_CS
VC2
VCC3.3
D202
IN4001
9.6MHz
RN206 P82E
WWCK
WBCK
WDAT
WXCK
MIDI_IN
LFT
AVCC
-9V
+9V
MIDI_L
MIDI_R
AUDSW
Q229
9014
Q220
9014
Q225
C8550
Q224
9013
18
设计
审核
批准
Title: MK-8502-PA
Revision: 1.1
File: E:\work\RUS\2538SC\2S538SC.DDB - Documents\5_MIDI.sch
Date: 29-Aug-2005
Sheet: 5 of 10
Multak

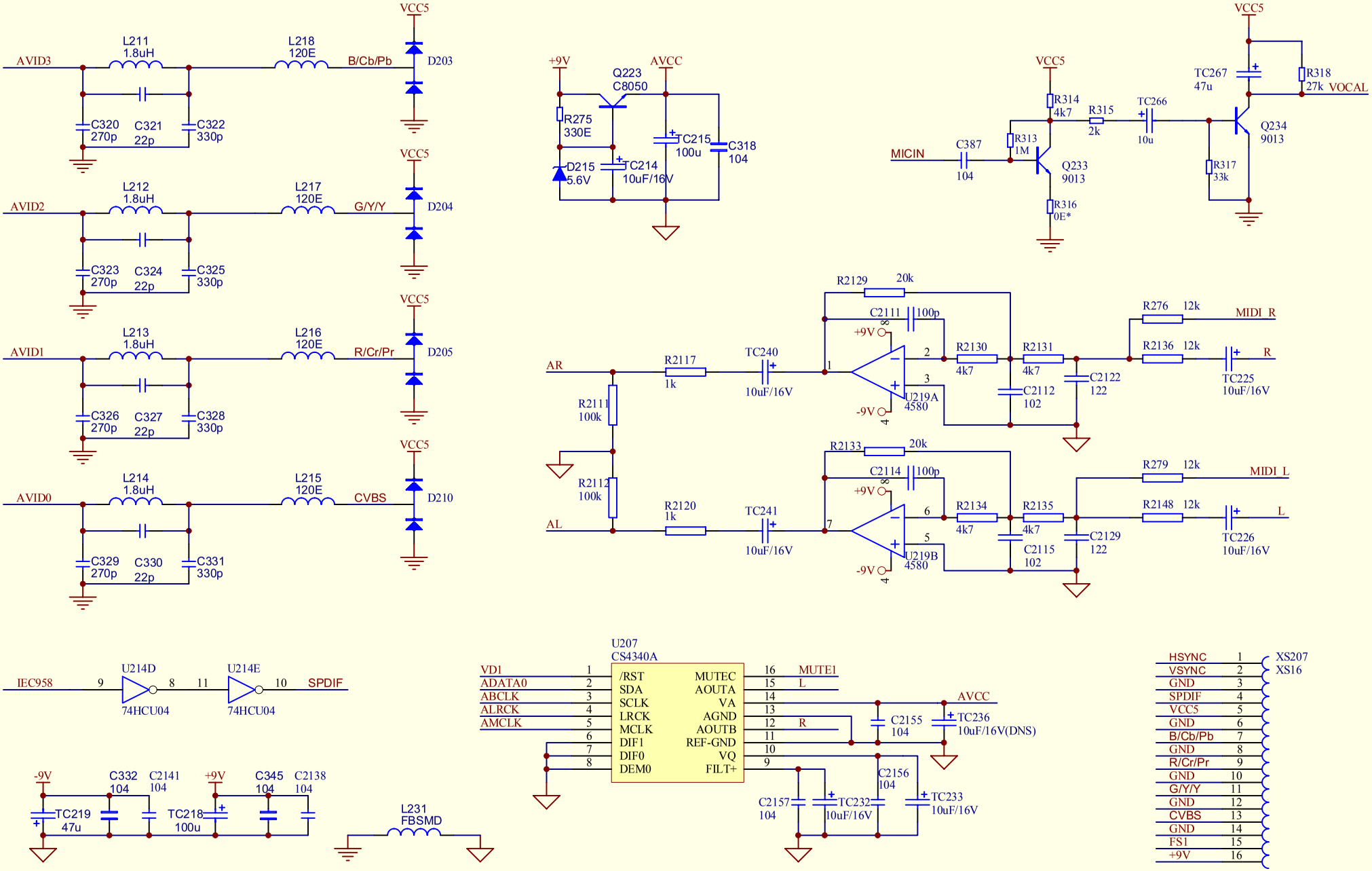
AVID3
L211 1.8uH
L218 120E
B/Cb/Pb
D203
C320 270p
C321 22p
C322 330p
AVID2
L212 1.8uH
L217 120E
G/Y/Y
D204
C323 270p
C324 22p
C325 330p
AVID1
L213 1.8uH
L216 120E
R/Cr/Pr
D205
C326 270p
C327 22p
C328 330p
AVID0
L214 1.8uH
L215 120E
CVBS
D210
C329 270p
C330 22p
C331 330p
VCC5
+9V
AVCC
Q223 C8050
R275 330E
D215 5.6V
C214 10uF/16V
TC215 100u
C318 104
MICIN
C387 104
R313 1M
R314 4k7
R315 2k
TC266 10u
Q233 9013
R316 0E*
TC267 47u
R318 27k
VOCAL
Q234 9013
R317 33k
AR
R2117 1k
TC240 10uF/16V
R2111 100k
R2112 100k
AL
R2120 1k
TC241 10uF/16V
R2129 20k
C2111 100p
R2130 4k7
R2131 4k7
C2112 102
C2122 122
U219A 4580
R2133 20k
C2114 100p
R2134 4k7
R2135 4k7
C2115 102
C2129 122
U219B 4580
R276 12k
MIDI_R
R2136 12k
R
TC225 10uF/16V
R279 12k
MIDI_L
R2148 12k
L
TC226 10uF/16V
IEC958
U214D
74HCU04
U214E
74HCU04
SPDIF
-9V
C332 104
C2141 104
TC219 47u
+9V
C345 104
C2138 104
TC218 100u
L231 FBSMD
U207
CS4340A
VD1
ADATA0
ABCLK
ALRCK
AMCLK
/RST
SDA
SCLK
LRCK
MCLK
DIF1
DIF0
DEM0
MUTEC
AOUTA
VA
AGND
AOUTB
REF-GND
VQ
FILT+
MUTE1
L
R
C2155 104
TC236 10uF/16V(DNS)
C2156 104
C2157 104
TC232 10uF/16V
TC233 10uF/16V
HSYNC
VSYNC
GND
SPDIF
VCC5
GND
B/Cb/Pb
GND
R/Cr/Pr
GND
G/Y/Y
GND
CVBS
GND
FS1
+9V
XS207
XS16

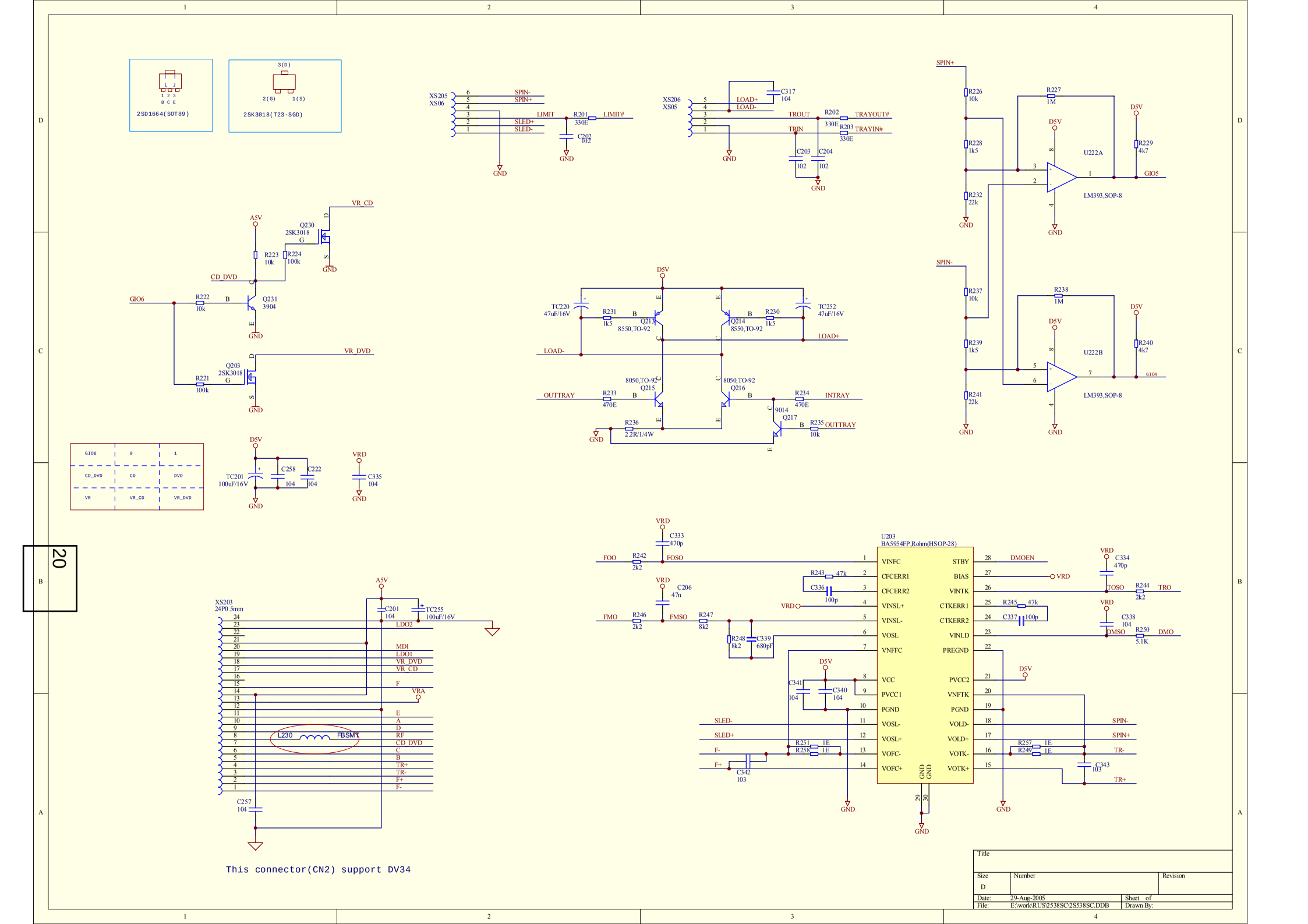
2SD1664(SOT89)
2SK3018(T23-SGD)
XS205
XS06
SPIN-
SPIN+
LIMIT
SLED+
SLED-
R201
330E
LIMIT#
C202
102
GND
XS206
XS05
LOAD+
LOAD-
C317
104
TROUT
TRIN
R202
330E
TRAYOUT#
R203
330E
TRAYIN#
C203
102
C204
102
SPIN+
R226
10k
R227
1M
D5V
U222A
R229
4k7
GIO5
R228
1k5
R232
22k
LM393,SOP-8
SPIN-
R237
10k
R238
1M
U222B
R240
4k7
GIO4
R239
1k5
R241
22k
A5V
Q230
2SK3018
G
D
S
VR_CD
R223
10k
R224
100k
CD_DVD
GIO6
R222
10k
Q231
3904
B
C
E
VR_DVD
Q203
2SK3018
R221
100k
TC220
47uF/16V
R231
1k5
Q213
8550,TO-92
Q214
8550,TO-92
R230
1k5
TC252
47uF/16V
LOAD-
LOAD+
OUTTRAY
R233
470E
Q215
8050,TO-92
Q216
8050,TO-92
R234
470E
INTRAY
R236
2.2R/1/4W
Q217
9014
R235
10k
OUTTRAY
GIO6
0
1
CD_DVD
CD
DVD
VR
VR_CD
VR_DVD
TC201
100uF/16V
C258
104
C222
104
VRD
C335
104
XS203
24P0.5mm
C201
104
TC255
100uF/16V
LDO2
MDI
LDO1
VR_DVD
VR_CD
F
VRA
E
A
D
RF
CD_DVD
C
B
TR+
TR-
F+
F-
L230
FBSMY
C257
104
U203
BA5954FP,Rohm(HSOP-28)
C333
470p
FOO
R242
2k2
FOSO
C206
47n
FMO
R246
2k2
FMSO
R247
8k2
R243
47k
C336
100p
R248
8k2
C339
680pF
VINFC
CFCERR1
CFCERR2
VINSL+
VINSL-
VOSL
VNFFC
VCC
PVCC1
PGND
VOSL-
VOSL+
VOFC-
VOFC+
STBY
BIAS
VINTK
CTKERR1
CTKERR2
VINLD
PREGND
PVCC2
VNFTK
PGND
VOLD-
VOLD+
VOTK-
VOTK+
GND
GND
DMOEN
C334
470p
TOSO
R244
2k2
TRO
R245
47k
C337
100p
C338
104
DMSO
R250
5.1K
DMO
C341
104
C340
104
SLED-
SLED+
F-
F+
R251
1E
R258
1E
C342
103
R257
1E
R249
1E
C343
103
SPIN-
SPIN+
TR-
TR+
This connector(CN2) support DV34
Title
Size
D
Number
Revision
Date:
29-Aug-2005
Sheet of
File:
E:\work\RUS\2538SC\2S538SC.DDB
Drawn By:
20

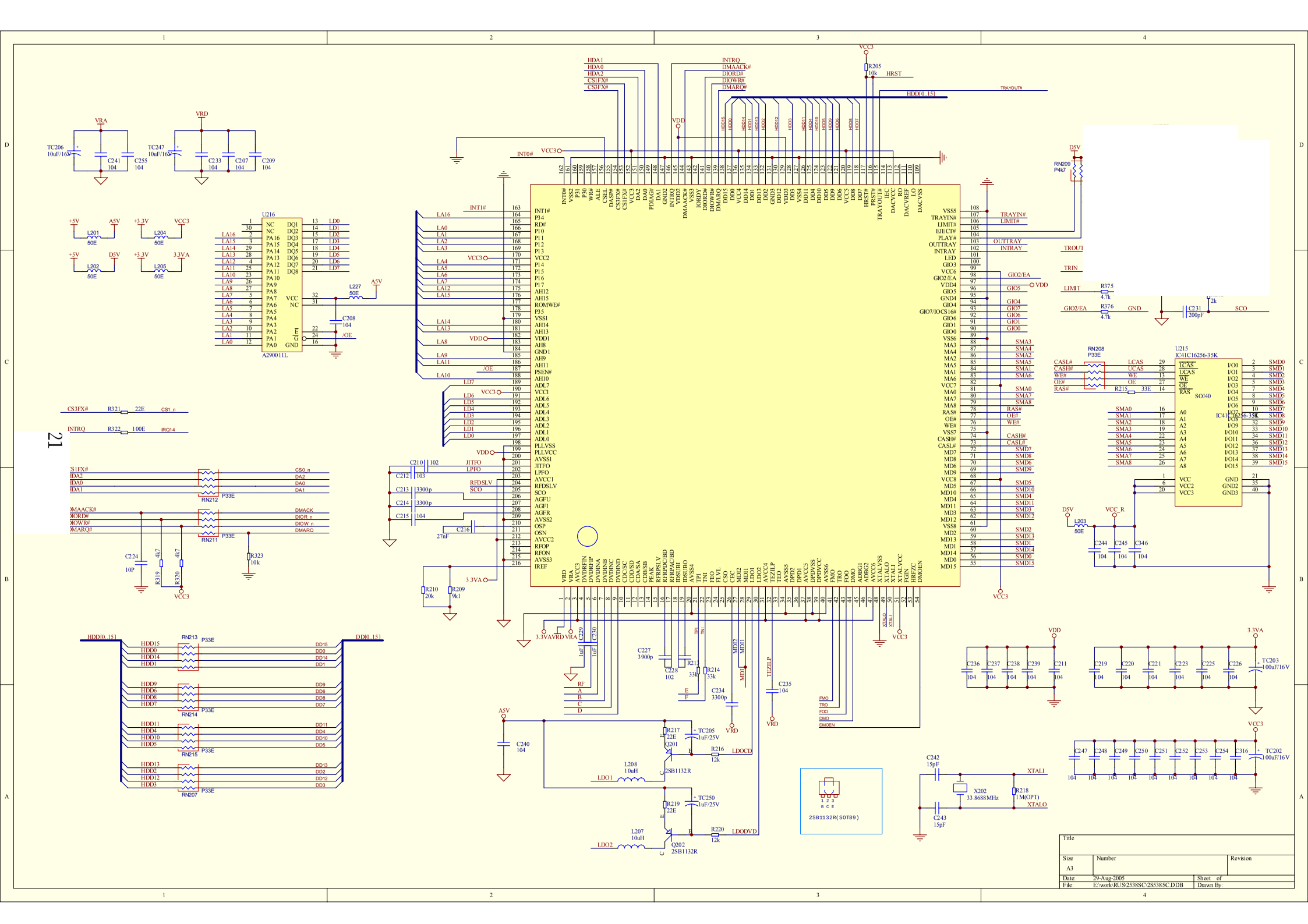
VRA
VRD
TC206 10uF/16V
TC247 10uF/16V
C241 104
C255 104
C233 104
C207 104
C209 104
+5V
A5V
+3.3V
VCC3
L201 50E
L204 50E
+5V
D5V
+3.3V
3.3VA
L202 50E
L205 50E
U216
A29001IL
L227 50E
C208 104
/OE
CS3FX#
R321 22E
CS1_n
INTRQ
R322 100E
IRQ14
RN212 P33E
RN211 P33E
C224 10P
R319 4k7
R320 4k7
R323 10k
VCC3
HDD[0..15]
RN213 P33E
RN214 P33E
RN215 P33E
RN207 P33E
DD[0..15]
HDA1
HDA0
HDA2
CS1FX#
CS3FX#
INTRQ
DMAACK#
DIORDF
DIOWR#
DMARQ#
VCC3
R205 10k
HRST
HDD[0..15]
TRAYOUT#
VDD
INT0#
INT1#
LA16
LA0
LA1
LA2
LA3
LA4
LA5
LA6
LA7
LA12
LA15
LA14
LA13
LA8
LA9
LA11
LA10
/OE
LD7
LD6
LD5
LD4
LD3
LD2
LD1
LD0
C210 102
C212 103
C213 3300p
C214 3300p
C215 104
C216 27nF
JITFO
LPFO
RFDSLV
SCO
R210 20k
R209 9k1
3.3VA
VRD
VRA
C229 1uF
C230 10uF
RF
A
B
C
D
C227 3900p
C228 102
R213 33k
R214 33k
E
F
C234 3300p
C235 104
TEZFLP
MDI2
MDI1
C240 104
A5V
R217 22E
Q201
2SB1132R
TC205 1uF/25V
R216 12k
LDOCD
L208 10uH
LDO1
R219 22E
TC250 1uF/25V
R220 12k
LDODVD
L207 10uH
LDO2
Q202
2SB1132R
2SB1132R(SOT89)
C242 15pF
X202 33.8688MHz
R218 1M(OPT)
XTALI
XTALO
C243 15pF
D5V
RN209 P4k7
TRAYIN#
LIMIT#
OUTTRAY
INTRAY
GIO2/EA
GIO5
GIO4
GIO7
GIO6
GIO1
GIO0
SMA3
SMA4
SMA2
SMA5
SMA1
SMA6
SMA0
SMA7
SMA8
RAS#
OE#
WE#
CASH#
CASL#
SMD7
SMD8
SMD6
SMD9
SMD5
SMD10
SMD4
SMD11
SMD3
SMD12
SMD2
SMD13
SMD1
SMD14
SMD0
SMD15
R375 4.7k
R376 4.7k
GND
C231 200pF
2k
SCO
TROUT
TRIN
LIMIT
RN208 P33E
CASL#
CASH#
WE#
OE#
RAS#
R215 33E
U215
IC41C16256-35K
SOJ40
L203 50E
VCC_R
C244
C245
C346
C236
C237
C238
C239
C211
C219
C220
C221
C223
C225
C226
TC203 100uF/16V
C247
C248
C249
C250
C251
C252
C253
C254
C316
TC202 100uF/16V
Title
Size
A3
Number
Revision
Date: 29-Aug-2005
Sheet of
File: E:\work\RUS\2538SC\2S538SC.DDB
Drawn By:

MIAN SCHEMATIC DIAGRAM

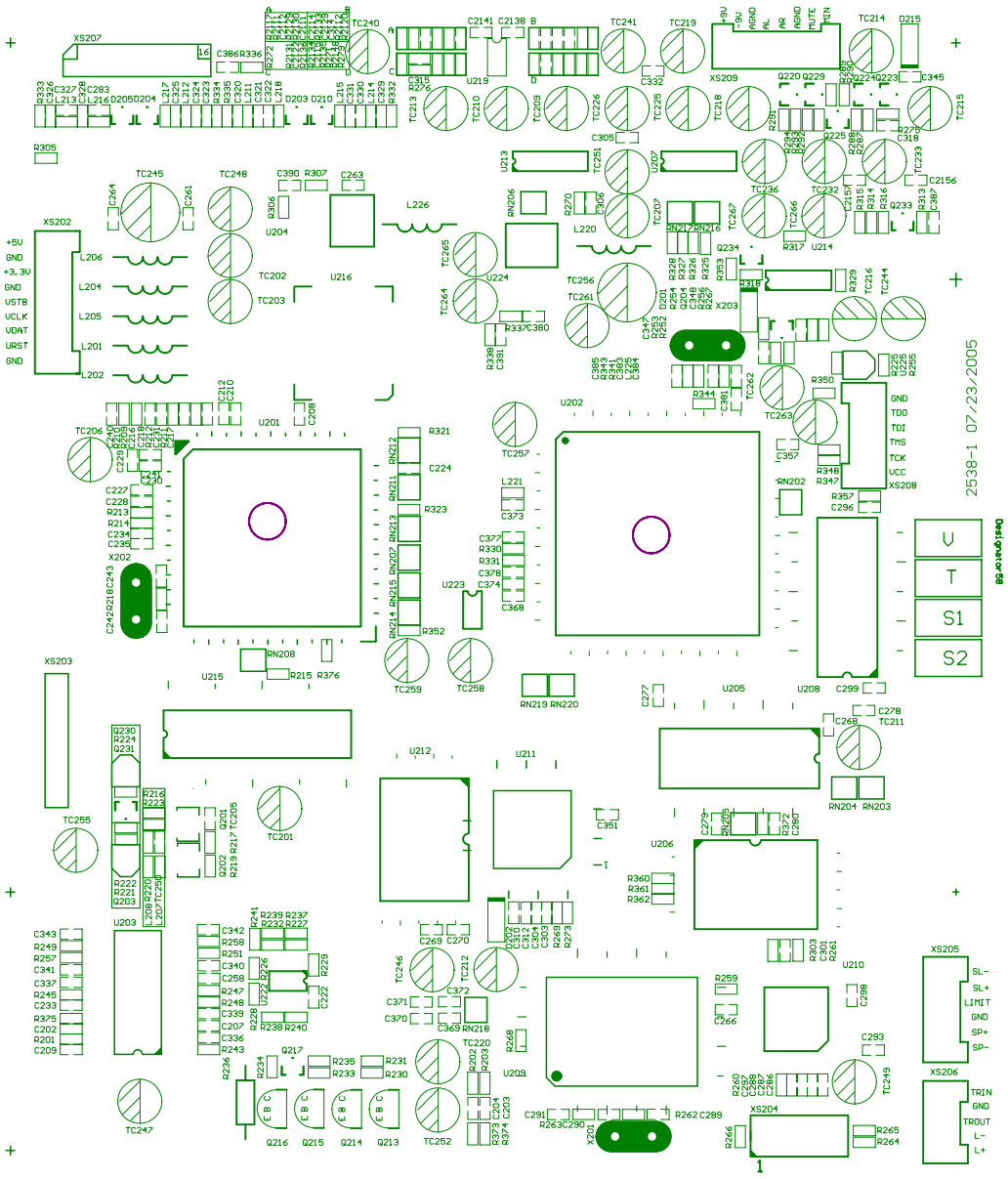

# POWER SCHEMATIC DIAGRAM

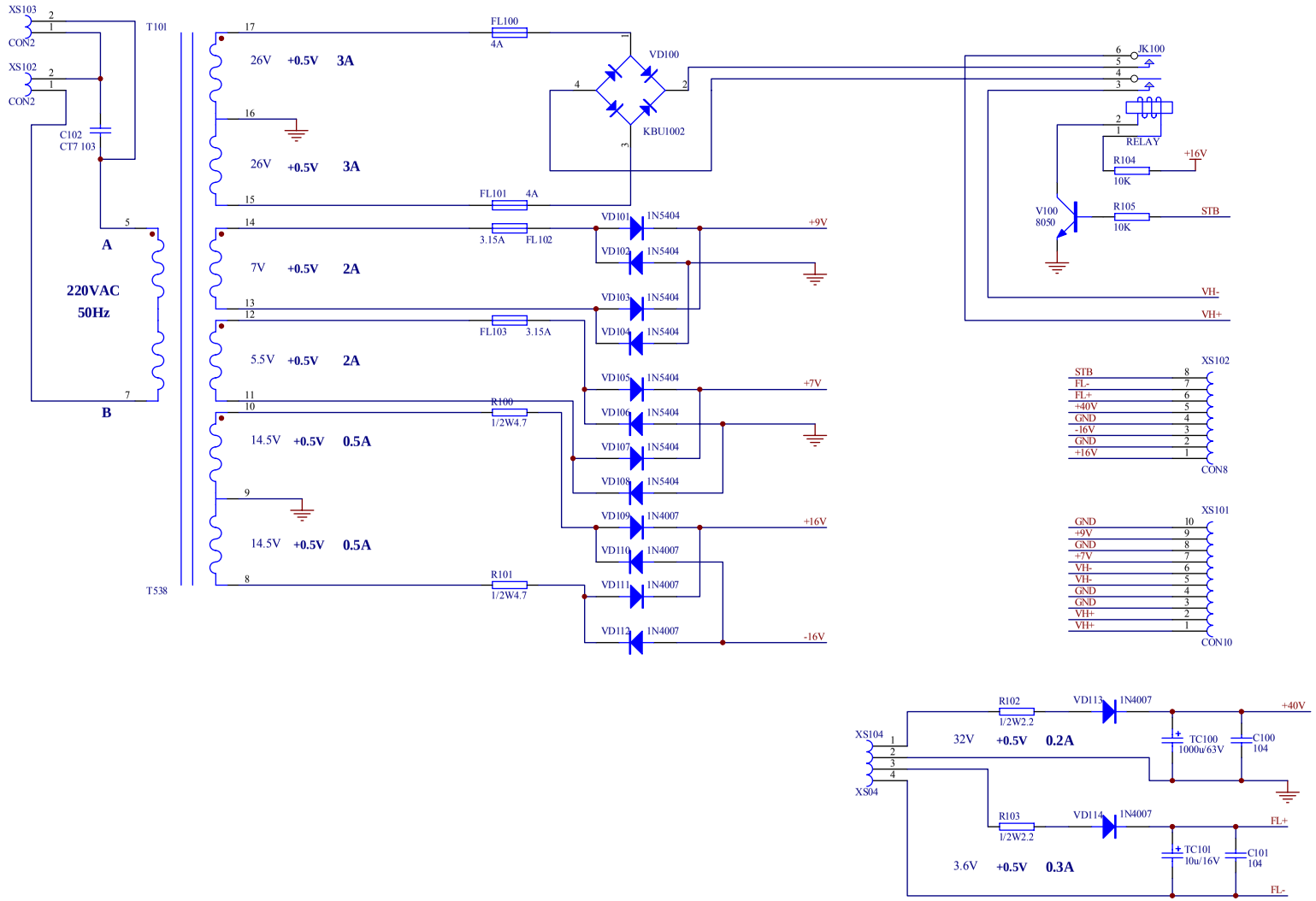


23

| 更改 数量 | 更改单号 | 签 名 | 日期 | ABS538 | BBK | | |
|---|---|---|---|---|---|---|---|
| 设 计 | | | | 电源板电路原理图 | 比例 | 质量 | 数量 |
| 审 核 | | | | | 第 3 张 | 共 5 张 | 版次：1.0 |
| 标准化 | | | | | | | |
| 批 准 | | | | 板号：A538SA3 | 广东步步高电子工业有限公司AV厂 | | |

# POWER SCHEMATIC DIAGRAM

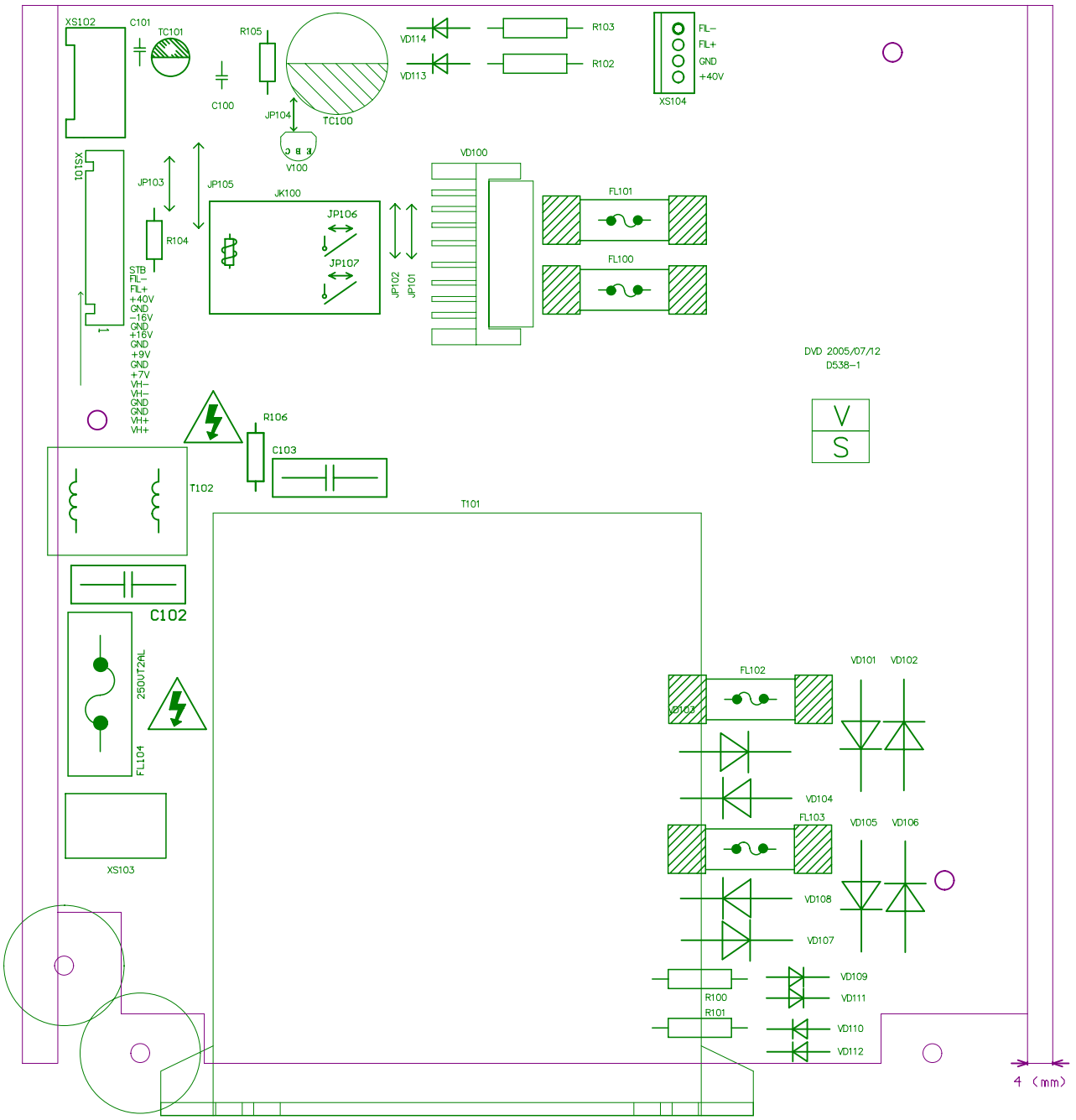

# UBSIDIARY POWER SCHEMATIC DIAGRAM

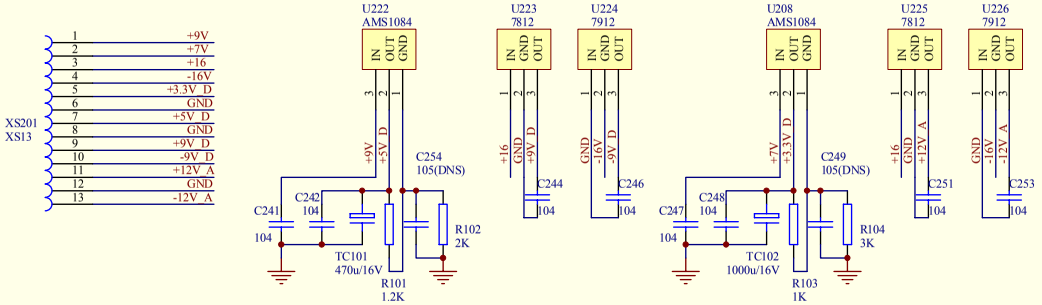


| 更改 | 数量 | 更改单号 | 签 名 | 日期 |
|---|---|---|---|---|
| 设 计 | | | | |
| 审 核 | | | | |
| 标准化 | | | | |
| 批 准 | | | | |

ABS538

**功放板电路原理图**

**板号：C538SA**

**BBK**

| 比例 | 质量 | 数量 |
|---|---|---|
| 第 3 张 | 共 5 张 | 版次：1.0 |

广东步步高电子工业有限公司AV厂

# UBSIDIARY POWER SCHEMATIC DIAGRAM

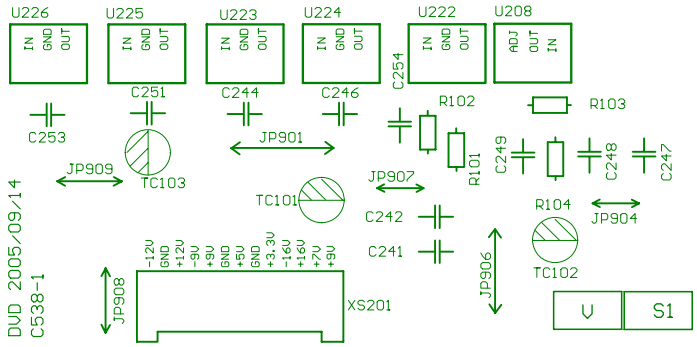

# SUBSIDIARY PANEL SCHEMATIC DIAGRAM

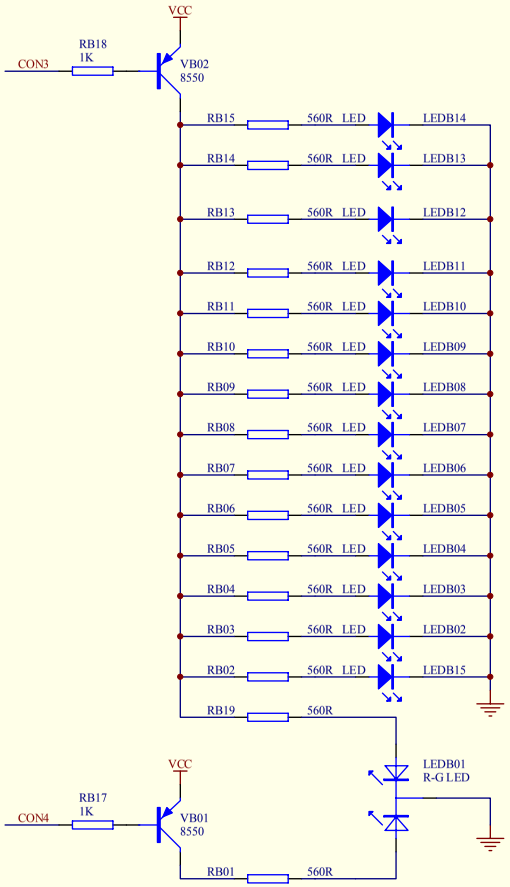


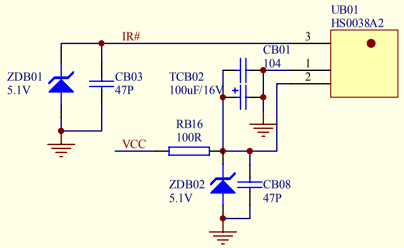


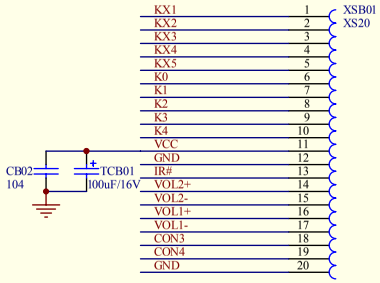


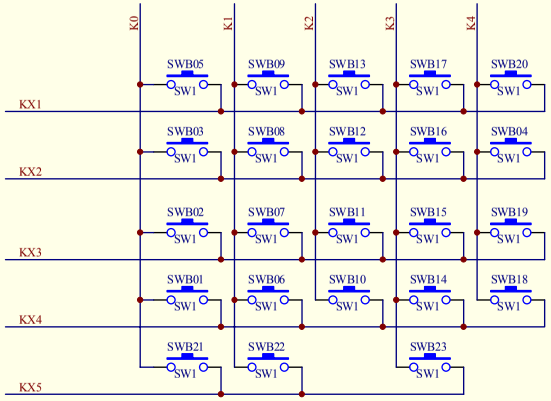


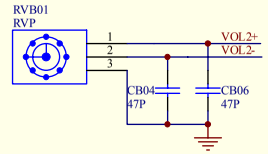


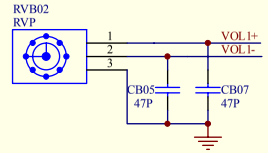


| 更改 | 数量 | 更改单号 | 签 名 | 日期 |
|---|---|---|---|---|
| 设 计 | | | | |
| 审 核 | | | | |
| 标准化 | | | | |
| 批 准 | | | | |

ABS538T

主面板电路原理图

板号: B538-0

BBK

| 比例 | 质量 | 数量 |
|---|---|---|
| 第 1 张 | 共 1 张 | 版次 :1.0 |

广东步步高电子工业有限公司AV厂

# SUBSIDIARY PANEL SCHEMATIC DIAGRAM

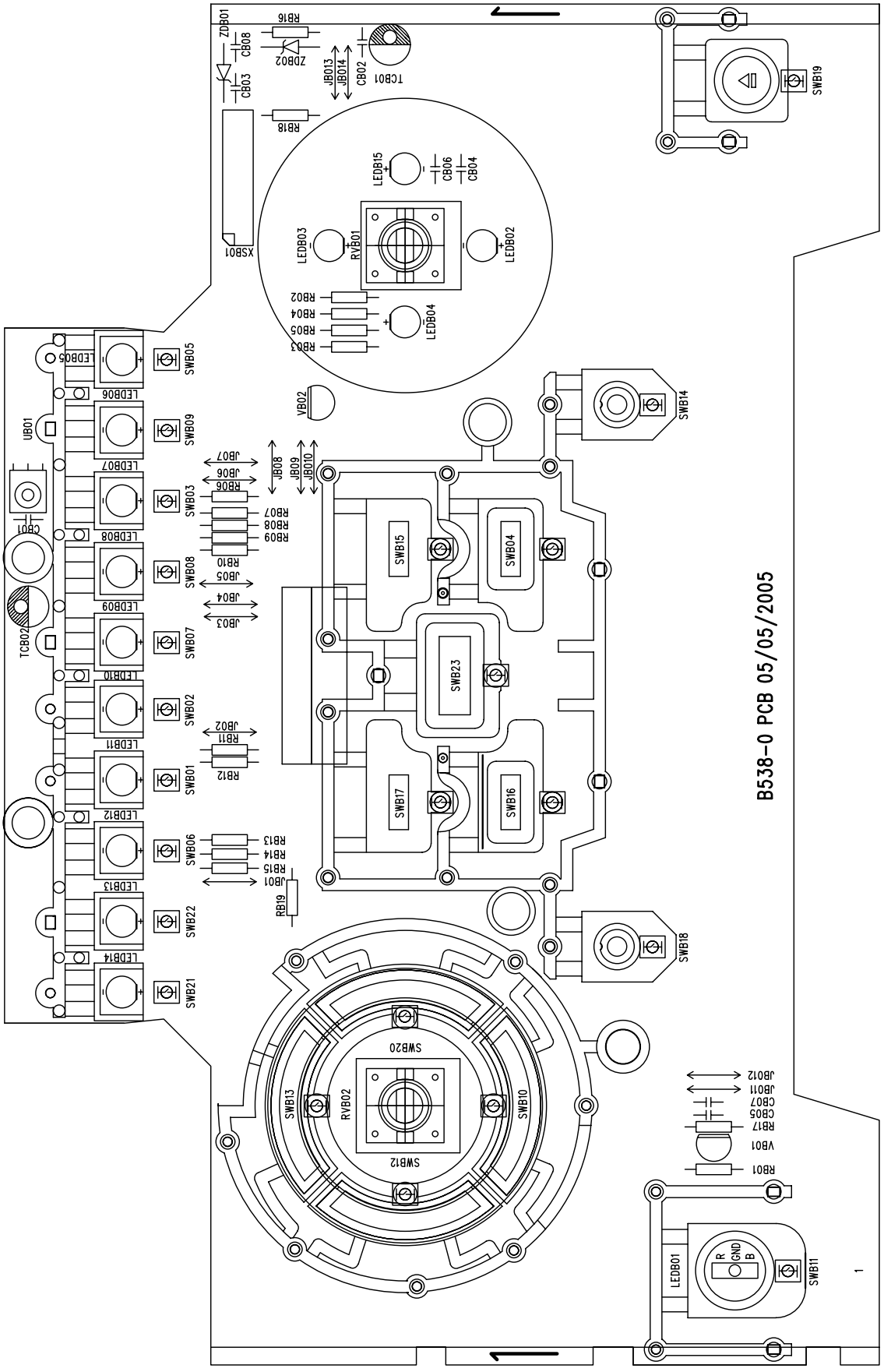

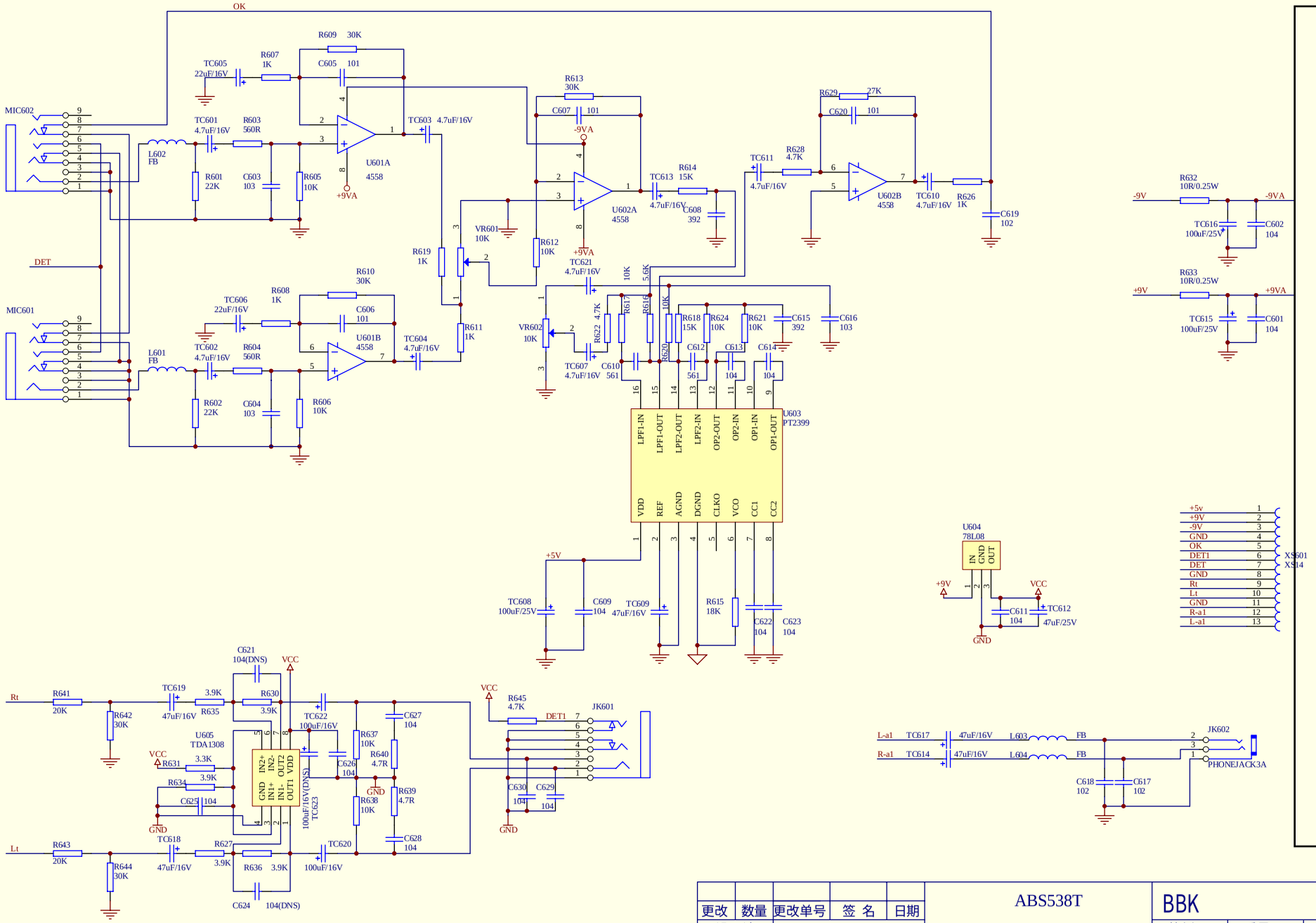


OK BOARD SCHEMATIC DIAGRAM

| 更改 | 数量 | 更改单号 | 签 名 | 日期 |
|---|---|---|---|---|
| 设 计 | | | | |
| 审 核 | | | | |
| 标准化 | | | | |
| 批 准 | | | | |

ABS538T

MIC板电原理图

板号:6538-1

BBK

| 比例 | 质量 | 数量 |
|---|---|---|
| 第 1 张 | 共 1 张 | 版次：1.0 |

广东步步高电子工业有限公司AV厂

OK BOARD SCHEMATIC DIAGRAM

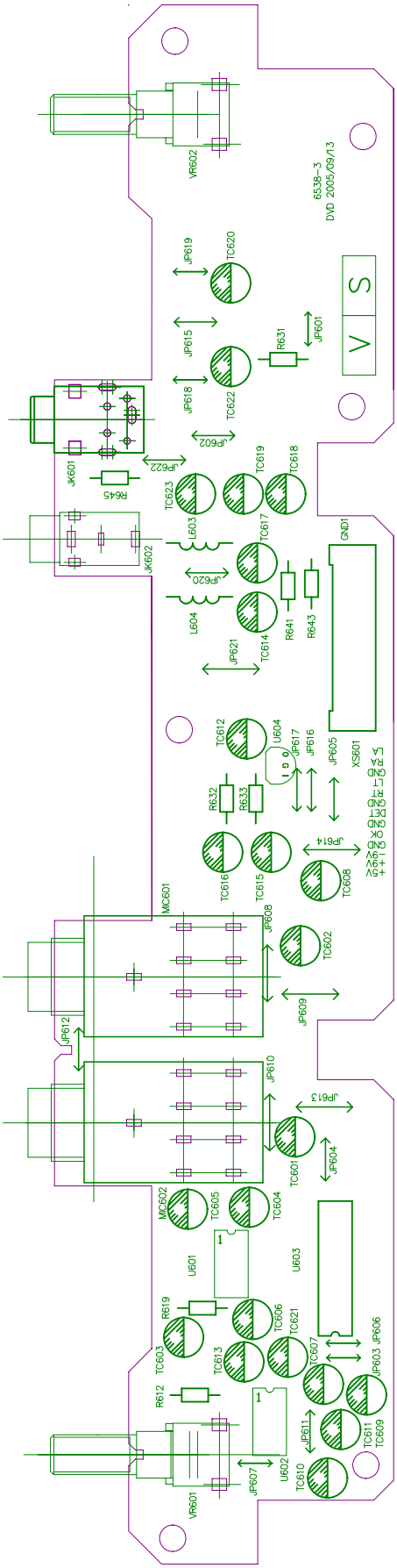

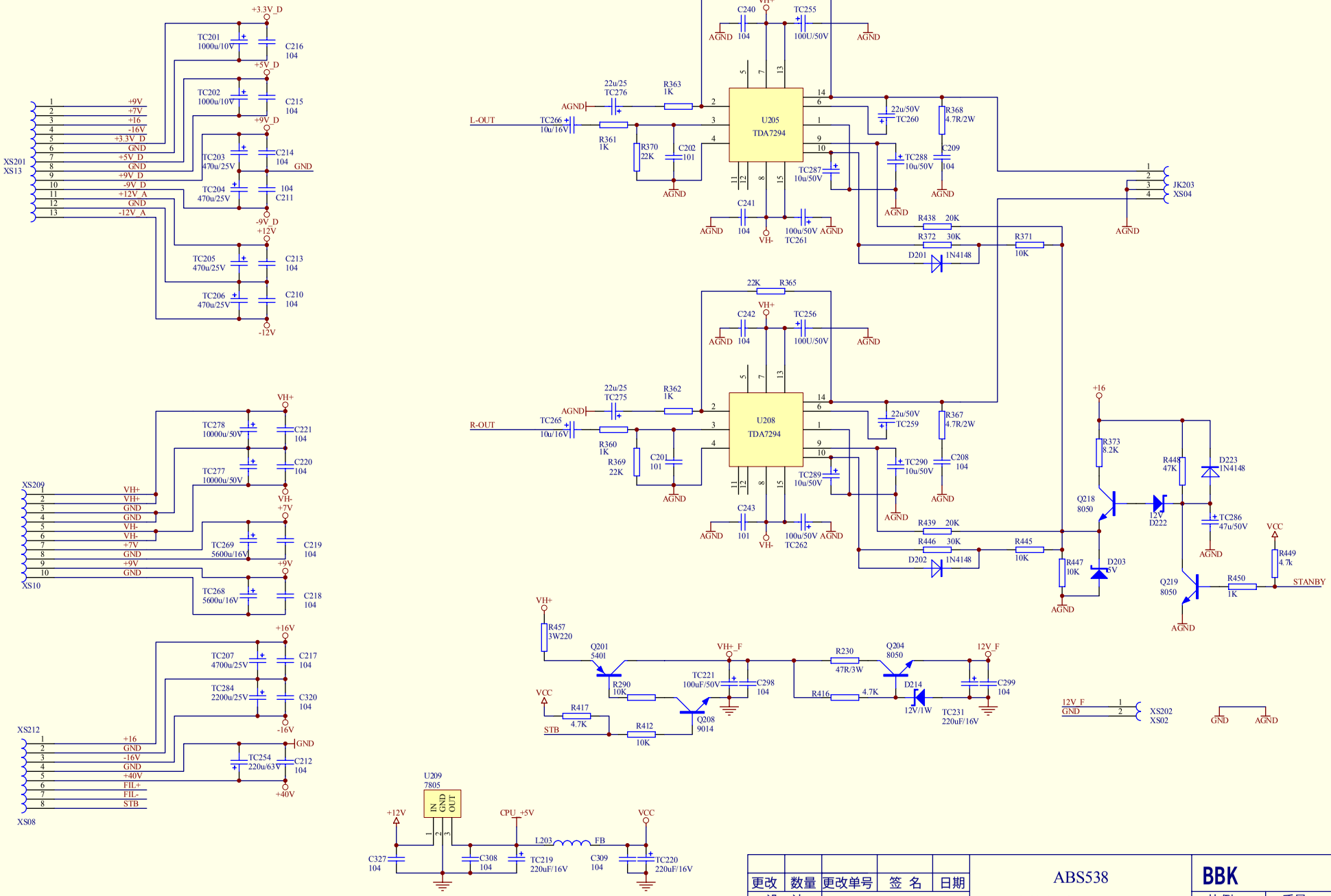
POWER AMPLIFIER BOARD OF SUBWOOFER
31
XS201
XS13
+9V
+7V
+16
-16V
+3.3V_D
GND
+5V_D
-9V_D
+12V_A
-12V_A
TC201 1000u/10V
TC202 1000u/10V
TC203 470u/25V
TC204 470u/25V
TC205 470u/25V
TC206 470u/25V
C216 104
C215 104
C214 104
C211 104
C213 104
C210 104
+3.3V_D
+5V_D
+9V_D
-9V_D
+12V
-12V
GND
XS209
XS10
VH+
VH-
+7V
+9V
TC278 10000u/50V
TC277 10000u/50V
TC269 5600u/16V
TC268 5600u/16V
C221 104
C220 104
C219 104
C218 104
XS212
XS08
-16V
+40V
FIL+
FIL-
STB
TC207 4700u/25V
TC284 2200u/25V
TC254 220u/63V
C217 104
C320 104
C212 104
22K R364
22K R365
C240 104
C242 104
TC255 100U/50V
TC256 100U/50V
AGND
U205 TDA7294
U208 TDA7294
22u/25 TC276
22u/25 TC275
R363 1K
R362 1K
L-OUT
R-OUT
TC266 10u/16V
TC265 10u/16V
R361 1K
R360 1K
R370 22K
R369 22K
C202 101
C201 101
22u/50V TC260
22u/50V TC259
R368 4.7R/2W
R367 4.7R/2W
C209 104
C208 104
TC288 10u/50V
TC290 10u/50V
TC287 10u/50V
TC289 10u/50V
C241 104
C243 101
100u/50V TC261
100u/50V TC262
VH-
R438 20K
R372 30K
R439 20K
R446 30K
D201 1N4148
D202 1N4148
R371 10K
R445 10K
JK203 XS04
+16
R373 8.2K
Q218 8050
R448 47K
D223 1N4148
12V D222
TC286 47u/50V
R447 10K
D203 6V
Q219 8050
R450 1K
R449 4.7k
VCC
STANBY
R457 3W220
Q201 5401
R290 10K
R417 4.7K
R412 10K
Q208 9014
STB
VH+_F
TC221 100uF/50V
C298 104
R230 47R/3W
R416 4.7K
Q204 8050
D214 12V/1W
12V_F
C299 104
TC231 220uF/16V
XS202
XS02
U209 7805
IN GND OUT
CPU_+5V
L203
FB
C327 104
C308 104
TC219 220uF/16V
C309 104
TC220 220uF/16V
更改 数量 更改单号 签 名 日期
设 计
审 核
标准化
批 准
ABS538
功放板电路原理图
板号：A538SA1
BBK
比例 质量 数量
第 3 张 共 5 张 版次：1.0
广东步步高电子工业有限公司AV厂

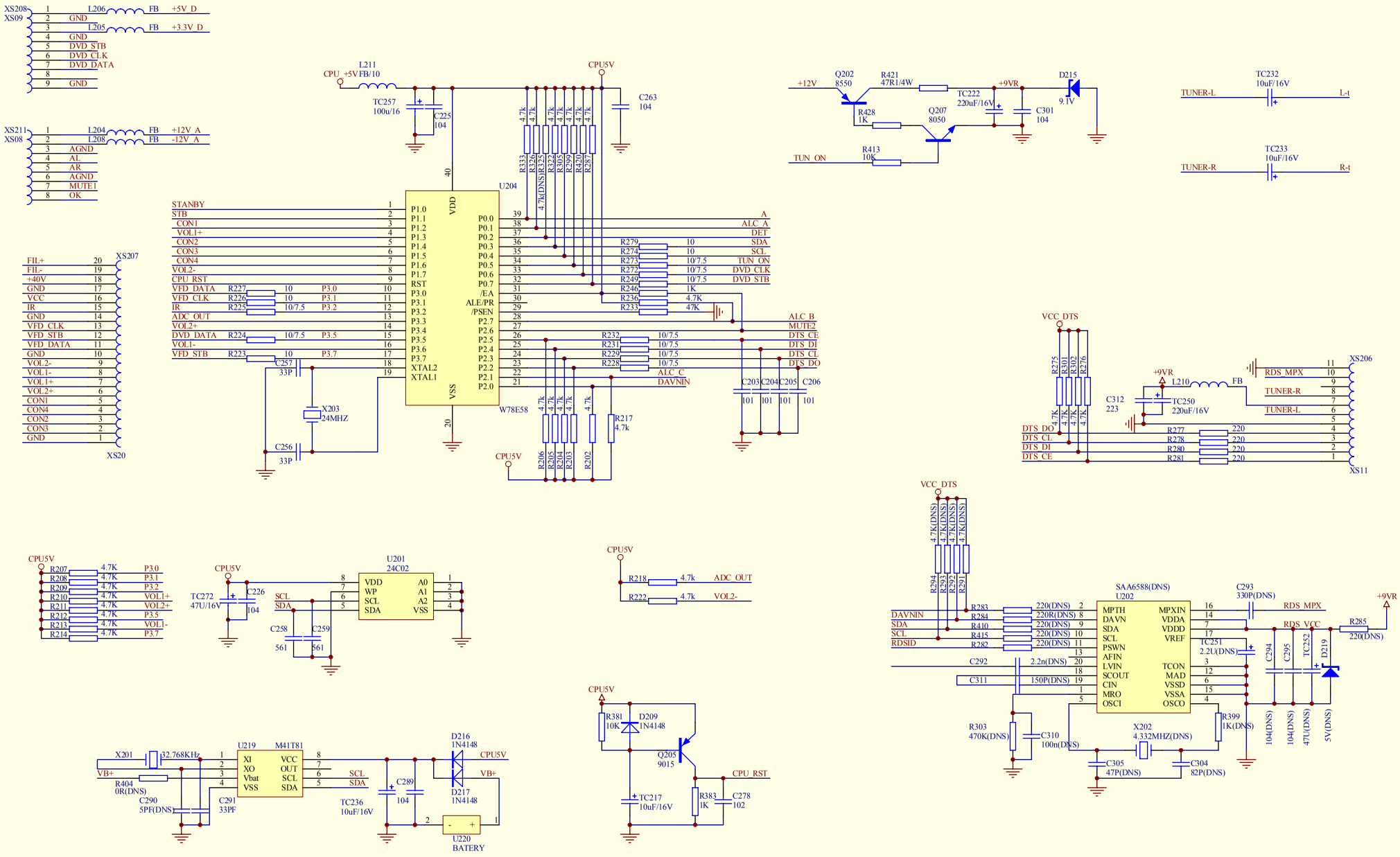


| 更改 | 数量 | 更改单号 | 签 名 | 日期 |
|---|---|---|---|---|
| 设 计 | | | | |
| 审 核 | | | | |
| 标准化 | | | | |
| 批 准 | | | | |

ABS538

**功放板电路原理图**

板号：A538SA2

BBK

| 比例 | 质量 | 数量 |
|---|---|---|
| 第 3 张 | 共 5 张 | 版次：1.0 |

广东步步高电子工业有限公司AV厂

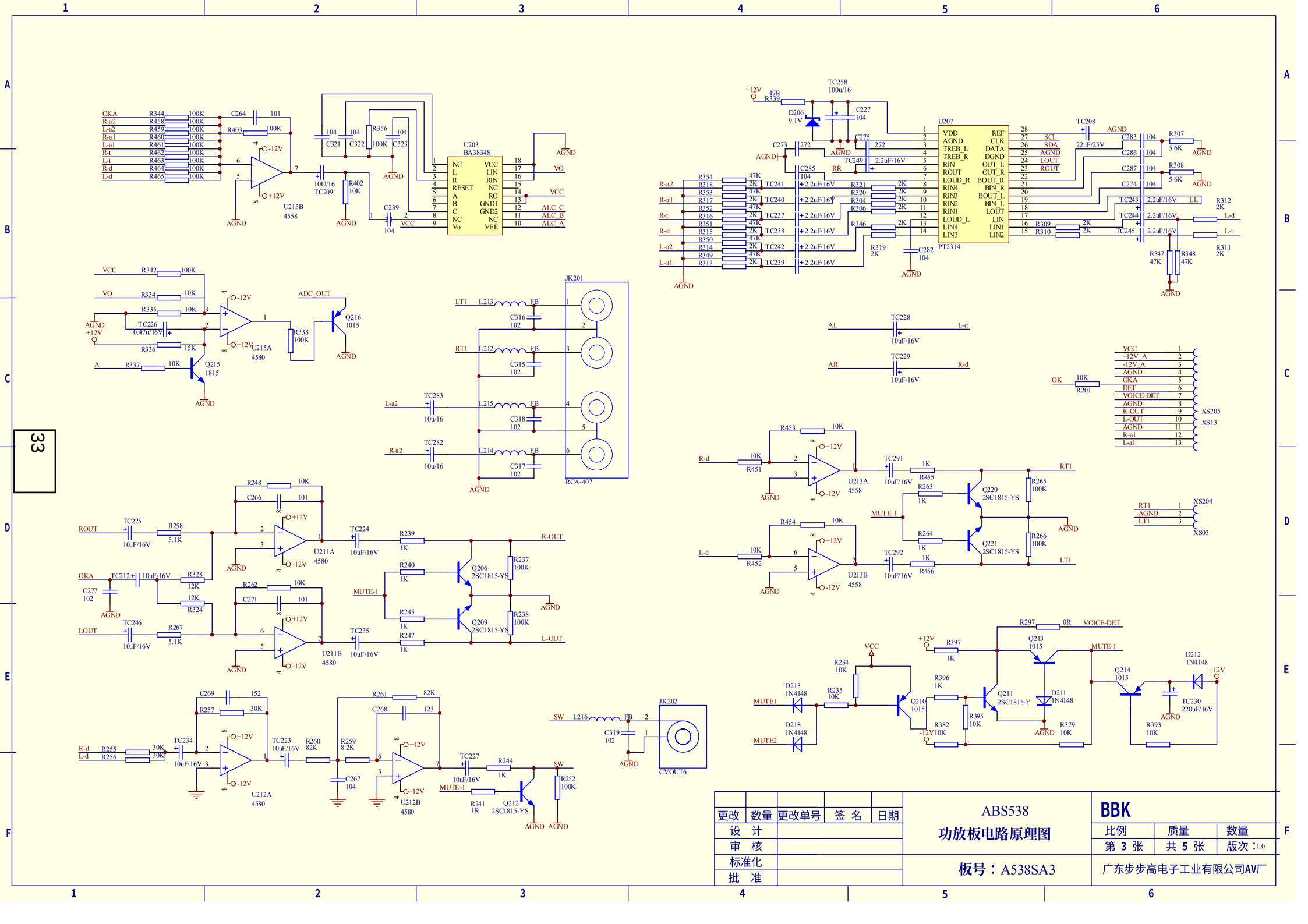


| 更改 | 数量 | 更改单号 | 签 名 | 日期 |
|---|---|---|---|---|
| 设 计 | | | | |
| 审 核 | | | | |
| 标准化 | | | | |
| 批 准 | | | | |

ABS538

**功放板电路原理图**

板号：A538SA3

**BBK**

| 比例 | 质量 | 数量 |
|---|---|---|
| 第 3 张 | 共 5 张 | 版次：1.0 |

广东步步高电子工业有限公司AV厂

POWER AMPLIFIER BOARD OF SUBWOOFER

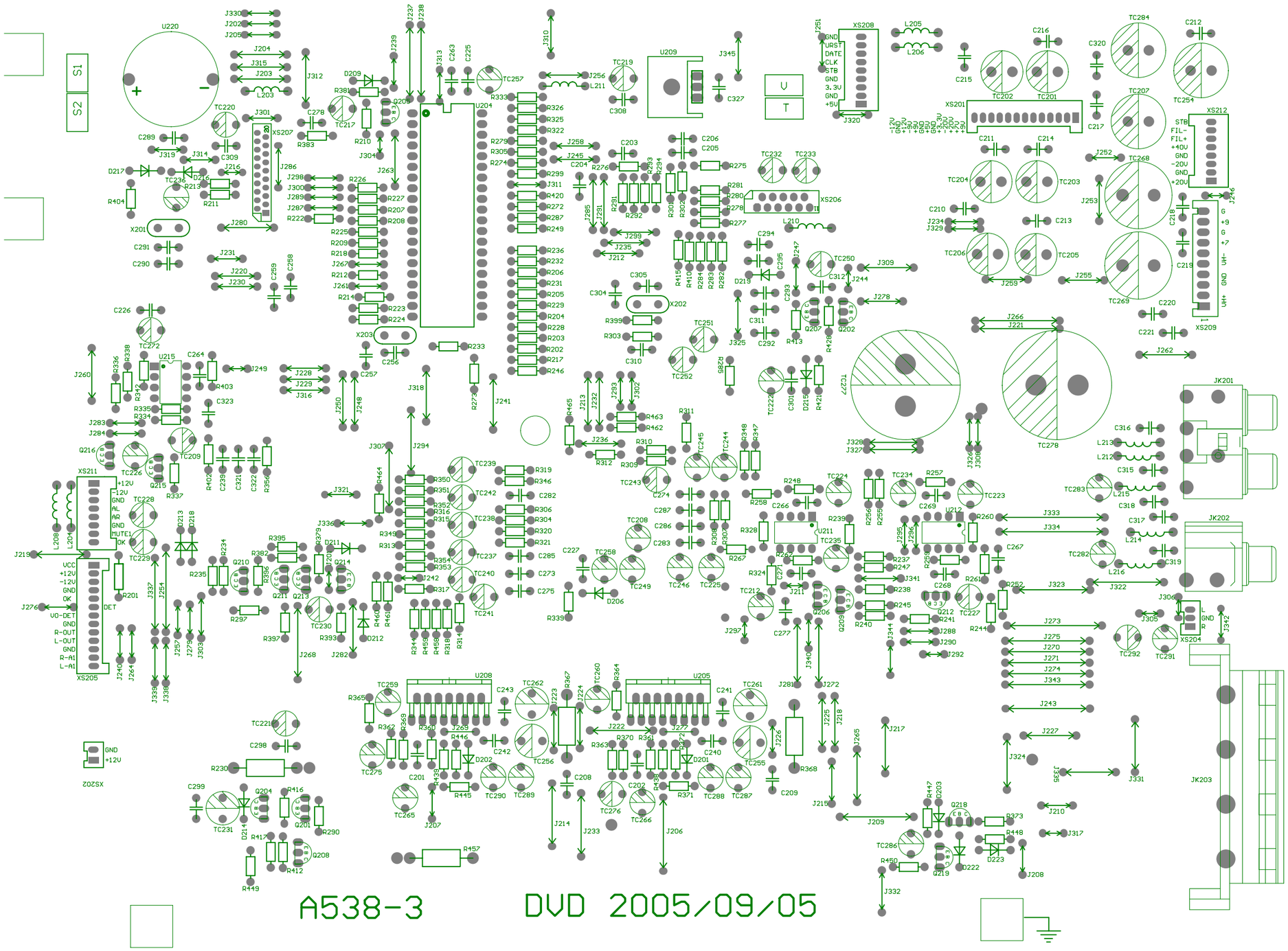

# 9. SPARE PARTS LIST

**ABS730X MATERIAL LIST**

**1. MAIN PANEL**

| MATERIAL CODE | MATERIAL NAME | SPECIFICATIONS | UNIT | QUANTITY | LOCATION |
|---|---|---|---|---|---|
| 5233877 | SOFT SPONGE SPACER | 46×20×4 DOUBLE-FACED HARD | PCS | 2 | 2PCS FOR VFD SCREEN |
| 0090001 | SMD RESISTOR | 1/16W 0Ω ±5% 0603 | PCS | 1 | R409 |
| 0000122 | CARBON FILM RESISTOR | 1/6W100Ω±5% SHAPED 7.5 | PCS | 5 | R402~R406 |
| 0000488 | CARBON FILM RESISTOR | 1/6W220Ω±5% SHAPED 7.5 | PCS | 1 | R401 |
| 0000133 | CARBON FILM RESISTOR | 1/6W4.7K±5% SHAPED 7.5 | PCS | 1 | R408 |
| 139 | CARBON FILM RESISTOR | 1/6W20K±5% SHAPED 7.5 | PCS | 1 | R407 |
| 0200035 | PORCELAIN CAPACITOR | 50V 47P ±5% NPO 5mm | PCS | 15 | C401~C404,C411~C420,C423 |
| 0310045 | SMD CAPACITOR | 50V 47P ±5% NPO 0603 | PCS | 2 | C421,C422 |
| 0200041 | PORCELAIN CAPACITOR | 50V 151 ±10% NPO 5mm | PCS | 2 | C409,C410 |
| 0310207 | SMD CAPACITOR | 50V 104 ±20% X7R 0603 | PCS | 5 | C405~C408,C424 |
| 0310543 | SMD CAPACITOR | 50V 104 ±10% X7R 0603 | PCS | 5 | C405~C408,C424 |
| 0260201 | CD | CD11C 16V100U±20%6×7 2.5 | PCS | 2 | TC401,TC403 |
| 0260240 | CD | CD110 63V100U±20%10×12 5 | PCS | 1 | TC402 |
| 0570006 | DIODE | 1N4148 | PCS | 5 | VD401~VD405 |
| 0580001 | VOLTAGE REGULATOR DIODE | 3.3V ±5% 1/2W | PCS | 1 | ZD401 |
| 970003 | CERAMIC RESONATOR | 455E | PCS | 1 | X401 |
| 1340003 | LIGHT TOUCH RESTORE SWITCH | HORIZONTAL 6×6×1 | PCS | 8 | SW401~SW408 |
| 1200728 | DISPLAY SCREEN | VFD48-1601FN | PCS | 1 | VFD401 |
| 0580073 | VOLTAGE REGULATOR DIODE | 5.1V ±5% 1/2W SHAPED 10mm | PCS | 13 | XS402,ZD402~ZD413 |
| 0881587 | IC | PT2222A SOP | PCS | 1 | U401 |
| 882647 | IC | PT6305 QFP | PCS | 1 | U402 |
| 1940286 | CABLE SOCKET | 10P 1.0mm STRAIGHT DUAL LINE PLUG CONTACT POINT | PCS | 2 | XS403,XS401 |
| 1563778 | PCB | 4538-0 | PCS | 1 | |
| 2100010 | CONNECTION CORDS | Φ0.6 SHAPED 5mm | PCS | 11 | JP414,JP416,JP419,JP422~JP424,JP427~JP430, JP440 |
| 2100003 | CONNECTION CORDS | Φ0.6 SHAPED 7.5mm | PCS | 9 | JP417,JP418,JP420,JP421,JP431,JP434~JP436, JP438 |
| 2100007 | CONNECTION CORDS | Φ0.6 SHAPED 15mm | PCS | 2 | JP406,JP426 |
| 2100004 | CONNECTION CORDS | Φ0.6 SHAPED 10mm | PCS | 2 | JP404,JP439 |
| 2100006 | CONNECTION CORDS | Φ0.6 SHAPED 12.5mm | PCS | 16 | JP401~JP403,JP405,JP407~JP413,JP415,JP425,JP432, JP433,JP437 |
| | | | | | |

**2. POWER BOARD**

| MATERIAL CODE | MATERIAL NAME | SPECIFICATIONS | UNIT | QUANTITY | LOCATION |
|---|---|---|---|---|---|
| 0000713 | CARBON FILM RESISTOR | 1/2W2.2Ω±5% | PCS | 2 | R102,R103 |
| 0010118 | METAL OXIDE FILM RESISTOR | 1/2W0.47Ω±5% SHAPED X 10 | PCS | 2 | R100,R101 |
| 0200227 | PORCELAIN CAPACITOR | 50V 104 ±10% 5mm | PCS | 1 | C100 |
| 0260717 | CD | CD11T 63V1000U±20%16×30 7.5 | PCS | 1 | TC100 |
| 3870057 | FUSE HOLDER | | PCS | 8 | FL100,FL101,FL102,FL103 |
| 570005 | DIODE | 1N4007 | PCS | 5 | VD109,VD110,VD111,VD112,VD113 |
| 2100010 | CONNECTION CORDS | Φ0.6 SHAPED 5mm | PCS | 2 | JP106,JP107 |
| 0570020 | DIODE | 1N5404 | PCS | 4 | VD101,VD102,VD103,VD104 |
| 2300041 | FUSE HOLDER | @T8AL 250V VDE | PCS | 2 | FL100,FL101 |
| 2300033 | FUSE HOLDER | @T3.15AL 250V VDE | PCS | 2 | FL102,FL103 |
| 2300038 | FUSE HOLDER | @T2.5AL 250V VDE | PCS | 1 | FL104 |
| 0670015 | SILICON BRIDGE | KBU10J | PCS | 1 | VD100 |
| 1000051 | POWER GRID FILTER | @JLB2085 2mH +∞-0% UL | PCS | 1 | T102 |
| 1940003 | SOCKET | 4P 2.5mm | PCS | 1 | XS104 |
| 1940074 | SOCKET | 2P 7.92mm | PCS | 1 | XS103 |
| 2100004 | CONNECTION CORDS | Φ0.6 SHAPED 10mm | PCS | 3 | JP101,JP102,VD114 |
| 3580180 | HEAT RADIATOR | 40×30×18 ABS730X(RU) | PCS | 1 | VD100 |
| 4000577 | SELF-TAPPING SCREW | BT 3×12 WHITE NICKEL | PCS | 1 | SILICON BRIDGE/HEAT RADIATOR |
| 4490001 | SPRING SHRAPNEL | Φ3 | PCS | 1 | SILICON BRIDGE/HEAT RADIATOR |
| 3020402 | FUSE HOLDER | BLX-2 | PCS | 1 | FL104 |
| 4450012 | SCREW SPACER | Φ3×7.2×0.5 | PCS | 1 | SILICON BRIDGE/HEAT RADIATOR |
| 460552 | SQUARE TRANSFORMER | @ABS730X CQC | PCS | 1 | T101 |

| | | | | | |
|---|---|---|---|---|---|
| 0070007 | HIGH VOLTAGE RESISTOR | @1/2W680K±5% UL | PCS | 1 | R106 |
| 2121862 | FLAT CABLE | 8P300 2.0 2PLUG WITH NEEDLE THE SAME DIRECTION | PCS | 1 | XS105 |
| 0210204 | ANTI-DISTURBANCE CAPACITOR | @MKP61 X2 275VAC 104M 15 UL | PCS | 2 | C102,C103 |
| 2121863 | FLAT CABLE | 10P320 2.5 2PLUG WITH NEEDLE THE SAME DIRECTION | PCS | 1 | XS101 |
| 0680045 | SCHOTTKY DIODE | SR360 DO-27 SHAPED R 17.5×8 | PCS | 4 | VD105,VD106,VD107,VD108 |
| 1563848 | PCB | @D538-1 UL | PCS | 1 | |
| | | | | | |

3. SUBSIDIARY POWER BOARD

| MATERIAL CODE | MATERIAL NAME | SPECIFICATIONS | UNIT | QUANTITY | LOCATION |
|---|---|---|---|---|---|
| 10209 | METAL FILM RESISTOR | 1/6W2K±1% | PCS | 1 | R104 |
| 0010006 | METAL FILM RESISTOR | 1/6W1.2K±1% | PCS | 1 | R103 |
| 0010038 | METAL FILM RESISTOR | 1/6W1K±1% | PCS | 1 | R101 |
| 0010248 | METAL FILM RESISTOR | 1/6W3K±1% | PCS | 1 | R102 |
| 2003199 | PORCELAIN CAPACITOR | 50V 104 ±10% SHAPED 5mm Φ8 | PCS | 6 | C241,C242,C247,C248,C251,C253 |
| 0260597 | CD | CD11 105℃ 16V1000U±20%10×20 5 | PCS | 2 | TC101,TC102 |
| 0882674 | IC | AZ1084T-ADJ TO-220 | PCS | 2 | U208,U222 |
| 0880131 | IC | L7812CV GOLD SEALED TO-220 | PCS | 1 | U225 |
| 0880505 | IC | L7912CV GOLD SEALED TO-220 | PCS | 1 | U226 |
| 2121864 | FLAT CABLE | 13P240 2.0 2PLUG WITH NEEDLE THE SAME DIRECTION | PCS | 1 | XS201 |
| 2100003 | CONNECTION CORDS | Φ0.6 SHAPED 7.5mm | PCS | 2 | JP904,JP907 |
| 0260715 | CD | CD11T 25V10U±10%5×11 C5 | PCS | 1 | TC103 |
| 2100004 | CONNECTION CORDS | Φ0.6 SHAPED 10mm | PCS | 2 | JP908,JP909 |
| 2100006 | CONNECTION CORDS | Φ0.6 SHAPED 12.5mm | PCS | 1 | JP906 |
| 1563972 | PCB | C538-1 | PCS | 1 | |
| | | | | | |

4. SUBSIDIARY PANEL

| MATERIAL CODE | MATERIAL NAME | SPECIFICATIONS | UNIT | QUANTITY | LOCATION |
|---|---|---|---|---|---|
| 5233878 | SOFT SPONGE SPACER | 7×7×7 DOUBLE-FACED HARD | PCS | 1 | 1PC FOR REMOTE IR SENSOR |
| 0000175 | CARBON FILM RESISTOR | 1/4W100Ω±5% | PCS | 1 | RB16 |
| 0000190 | CARBON FILM RESISTOR | 1/4W560Ω±5% | PCS | 18 | RB17,RB18 ,RB01~RB15,RB19 |
| 0580073 | VOLTAGE REGULATOR DIODE | 5.1V ±5% 1/2W SHAPED 10mm | PCS | 1 | ZDB01 |
| 0580009 | VOLTAGE REGULATOR DIODE | 9.1V ±5% 1/2W | PCS | 1 | ZDB02 |
| 0200035 | PORCELAIN CAPACITOR | 50V 47P ±5% NPO 5mm | PCS | 6 | CB03~CB08 |
| 0200318 | PORCELAIN CAPACITOR | 50V 104 ±20% SHAPED 5mm | PCS | 2 | CB01,CB02 |
| 0260201 | CD | CD11C 16V100U±20%6×7 2.5 | PCS | 2 | TCB01,TCB02 |
| 780030 | TRIODE | 8550C(120-200) TO-92 | PCS | 2 | VB01,VB02 |
| 1340003 | LIGHT TOUCH RESTORE SWITCH | HORIZONTAL 6×6×1 | PCS | 23 | SWB01~SWB23 |
| 0620076 | LIGHT RADIATION DIODE | 3B3HC COLORLESS WITH BLUE | PCS | 14 | LEDB02~LEDB15 |
| 0620054 | DUAL-COLOR LIGHT RADIATION DIODE | 3RB9HW-A COMMON CATHODE RED/BLUE | PCS | 1 | LEDB01 |
| 2360019 | RECEIVING HEAD | AT138B | PCS | 1 | UB01 |
| 0160208 | DIGITAL POTENTIOMETER | EC1120-2-20-F15 | PCS | 1 | RVB02 |
| 0160207 | DIGITAL POTENTIOMETER | EC1120-2-20-F20 | PCS | 1 | RVB01 |
| 1940286 | CABLE SOCKET | 10P 1.0mm STRAIGHT DUAL LINE PLUG CONTACT POINT | PCS | 1 | XS401 |
| 1563780 | PCB | B538-0 | PCS | 1 | |
| 2100004 | CONNECTION CORDS | Φ0.6 SHAPED 10mm | PCS | 14 | JB01~JB14 |
| | | | | | |

5. OK BOARD

| MATERIAL CODE | MATERIAL NAME | SPECIFICATIONS | UNIT | QUANTITY | LOCATION |
|---|---|---|---|---|---|
| 0090106 | SMD RESISTOR | 1/16W 4.7Ω ±5% 0603 | PCS | 2 | R639,R640 |
| 0000118 | CARBON FILM RESISTOR | 1/6W10Ω±5% SHAPED 7.5 | PCS | 2 | R632,R633 |
| 0090012 | SMD RESISTOR | 1/16W 560Ω ±5% 0603 | PCS | 2 | R603,R604 |
| 0090014 | SMD RESISTOR | 1/16W 1K ±5% 0603 | PCS | 4 | R607,R608,R611,R626 |
| 2110203 | LEAD | 20# 100mm BLACK WITH WELDING PIECE HOLE Φ4.2 | PCS | 1 | |
| 0000022 | CARBON FILM RESISTOR | 1/6W1K±5% | PCS | 1 | R619 |
| 0700004 | SMD VOLTAGE REGULATOR DIODE | 5.1V ±5% 1/2W | PCS | 2 | ZD602,ZD604 |
| 0000030 | CARBON FILM RESISTOR | 1/6W3.3K±5% | PCS | 1 | R631 |
| 0310045 | SMD CAPACITOR | 50V 47P ±5% NPO 0603 | PCS | 1 | C632 |

| | | | | | |
|---|---|---|---|---|---|
| 0090224 | SMD RESISTOR | 1/16W 3.9K ±5% 0603 | PCS | 5 | R627,R630,R634~R636 |
| 0090019 | SMD RESISTOR | 1/16W 4.7K ±5% 0603 | PCS | 2 | R628,R622 |
| 0090225 | SMD RESISTOR | 1/16W 5.6K ±5% 0603 | PCS | 1 | R616 |
| 0090023 | SMD RESISTOR | 1/16W 10K ±5% 0603 | PCS | 8 | R605,R606,R617,R620,R621,R624,R637,R638 |
| 0000040 | SMD RESISTOR | 1/6W10K±5% | PCS | 1 | R612 |
| 0090024 | SMD RESISTOR | 1/16W 15K ±5% 0603 | PCS | 2 | R614,R618 |
| 0090188 | SMD RESISTOR | 1/16W 18K ±5% 0603 | PCS | 1 | R615 |
| 0000045 | SMD RESISTOR | 1/6W20K±5% | PCS | 2 | R641,R643 |
| 0090026 | SMD RESISTOR | 1/16W 22K ±5% 0603 | PCS | 2 | R601,R602 |
| 0090027 | SMD RESISTOR | 1/16W 27K ±5% 0603 | PCS | 1 | R629 |
| 0090189 | SMD RESISTOR | 1/16W 30K ±5% 0603 | PCS | 5 | R609,R610,R613,R642,R644 |
| 310047 | SMD CAPACITOR | 50V 101 ±5% NPO 0603 | PCS | 4 | C605~C607,C620 |
| 0310066 | SMD CAPACITOR | 50V 102 ±10% X7R 0603 | PCS | 3 | C617~C619 |
| 0310072 | SMD CAPACITOR | 50V 103 ±10% X7R 0603 | PCS | 3 | C603,C604,C616 |
| 0310207 | SMD CAPACITOR | 50V 104 ±20% X7R 0603 | PCS | 14 | C601,C602,C609,C611,C613,C614,C622,C623,C625~C630 |
| 0310323 | SMD CAPACITOR | 50V 392 ±10% X7R 0603 | PCS | 2 | C608,C615 |
| 0310197 | SMD CAPACITOR | 50V 561 ±10% X7R 0603 | PCS | 2 | C610,C612 |
| 1563974 | PCB | 6538-3 | PCS | 1 | |
| 0260241 | CD | CD11C 16V4.7U±20%4×7 1.5 | PCS | 9 | TC601~TC604,TC607,TC610,TC611,TC613,TC621 |
| 0000133 | CARBON FILM RESISTOR | 1/6W4.7K±5% SHAPED 7.5 | PCS | 1 | R645 |
| 0260199 | CD | CD11C 16V22U±20%4×7 1.5 | PCS | 2 | TC605,TC606 |
| 260200 | CD | CD11C 16V47U±20%5×7 2 | PCS | 6 | TC609,TC614,TC617~TC619,TC612 |
| 0260103 | CD | CD11C 25V100U±20%8×9 3.5 | PCS | 5 | TC608,TC615,TC616,TC620,TC622 |
| 0390057 | MAGNETIC BEADS INDUCTOR | RH354708 | PCS | 2 | L603,L604 |
| 0390055 | SMD MAGNETIC BEADS | FCM2012K-601B | PCS | 2 | L601,L602 |
| 0881743 | IC | F4558 DIP | PCS | 2 | U601,U602 |
| 2150262 | FLAT CABLE | 13P200 2.0 T2 2×2P SCREEN-SHIELDED WITH NEEDLE THE SAME DIRECTION | PCS | 1 | XS601 |
| 1980006 | MIC SOCKET | CK3-6.35-106 | PCS | 2 | MIC601,MIC602 |
| 1980046 | HEADPHONE SOCKET | ST-301-030-100 | PCS | 1 | JK602 |
| 0160206 | ROTATED POTENTIOMETER | RK093NHA03-F25B12-B10K | PCS | 1 | VR601 |
| 1980048 | MIC SOCKET | ST-403-070-100 | PCS | 1 | JK601 |
| 0160209 | ROTATED POTENTIOMETER | RK093NHA03-F25B12-B50K | PCS | 1 | VR602 |
| 2100003 | CONNECTION CORDS | Φ0.6 SHAPED 7.5mm | PCS | 10 | JP602,JP604,JP605,JP611,JP612,JP615~JP617,JP620,JP622 |
| 2100004 | CONNECTION CORDS | Φ0.6 SHAPED 10mm | PCS | 6 | JP608~JP610,JP613,JP614,JP621 |
| 2100010 | CONNECTION CORDS | Φ0.6 SHAPED 5mm | PCS | 6 | JP601,JP603,JP606,JP607,JP618,JP619 |
| 0880230 | IC | PT2399 DIP | PCS | 1 | U603 |
| 882115 | IC | PJ78L05CT TO-92 | PCS | 1 | U604 |
| 0881537 | IC | TDA1308 SOP | PCS | 1 | U605 |
| | | | | | |

**6. POWER AMPLIFIER BOARD OF SUBWOOFER**

| MATERIAL CODE | MATERIAL NAME | SPECIFICATIONS | UNIT | QUANTITY | LOCATION |
|---|---|---|---|---|---|
| 10313 | METAL OXIDE FILM RESISTOR | 2W 4.7Ω±5% SHAPED 15 | PCS | 2 | R367,R368 |
| 0010210 | METAL OXIDE FILM RESISTOR | 3W47Ω±5% SHAPED R 20×8 | PCS | 1 | R230 |
| 0260621 | CD | CD11T 63V220U±20%10×20 5 | PCS | 1 | TC254 |
| 0260479 | CD | CD11 105℃ 25V4700U±20%16×30 7.5 | PCS | 1 | TC207 |
| 1910198 | TERMINAL SOCKET | AV4-8.4-13/PB-26 | PCS | 1 | JK201 |
| 260718 | CD | CD11T 25V2200U±20%13×26 5 | PCS | 1 | TC284 |
| 1910081 | TERMINAL SOCKET | AV1-8.4-5G-2 YELLOW | PCS | 1 | JK202 |
| 0260721 | CD | CD11T 16V5600U±20%16×30 7.5 | PCS | 2 | TC268,TC269 |
| 0260720 | CD | CD11T 50V10000U±20% 35×40 10 | PCS | 2 | TC277,TC278 |
| 0960139 | CRYSTAL OSCILLATOR | 24.00MHZ 49-S | PCS | 1 | X203 |
| 3630185 | BATTERY HOLDER | 1403G6-GBK4B | PCS | 1 | U220 |
| 0881743 | IC | F4558 DIP | PCS | 3 | U211,U212,U215 |
| 2110541 | LEAD | 18# 155mm BLACK DUAL LAYER INSULATION | PCS | 1 | |
| 0960017 | CRYSTAL OSCILLATOR | 32.768KHz 3×9 | PCS | 1 | X201 |
| 1940001 | SOCKET | 2P 2.5mm | PCS | 1 | XS202 |

| | | | | | |
|---|---|---|---|---|---|
| 2150248 | FLAT CABLE | 3P220 2.0 2PLUG 2P SCREEN-SHIELDED WITH NEEDLE THE SAME DIRECTION | PCS | 1 | XS204 |
| 2110336 | LEAD | 20# 150mm BLACK WITH WELDING PIECE | PCS | 1 | 接地引线 |
| 1940065 | SOCKET | 13P 2.0mm | PCS | 2 | XS201,XS205 |
| 1940072 | CABLE SOCKET | 6/5P 1.25mm STRAIGHT DUAL LINE PLUG | PCS | 1 | XS206 |
| 1940008 | SOCKET | 8P 2.0mm | PCS | 2 | XS211,XS212 |
| 1940044 | SOCKET | 9P 2.0mm | PCS | 1 | XS208 |
| 1940030 | SOCKET | 10P 2.5mm | PCS | 1 | XS209 |
| 1940286 | CABLE SOCKET | 10P 1.0mm STRAIGHT DUAL LINE PLUG CONTACT POINT | PCS | 1 | XS207 |
| 1990036 | EXTERNAL CONNECTION CORD SOCKET | WP4-5 | PCS | 1 | JK203 |
| 1850005 | DUAL LINE IC SOCKET | 40P DIP | PCS | 1 | U204 |
| 5446825 | PCB SEMI-FINISHED PRODUCT | A538-0 ABS730X(RU) AI | PCS | 1 | |
| | | | | | |

**7. AV BOARD**

| MATERIAL CODE | MATERIAL NAME | SPECIFICATIONS | UNIT | QUANTITY | LOCATION |
|---|---|---|---|---|---|
| 0090001 | SMD RESISTOR | 1/16W 0Ω ±5% 0603 | PCS | 1 | R713 |
| 0090002 | SMD RESISTOR | 1/16W 2.2 Ω ±5% 0603 | PCS | 1 | R706 |
| 310085 | SMD CAPACITOR | 50V 20P ±5% NPO 0603 | PCS | 6 | C704,C705,C710,C711,C712,C713 |
| 0310066 | SMD CAPACITOR | 50V 102 ±10% X7R 0603 | PCS | 2 | C708,C709 |
| 0310222 | SMD CAPACITOR | 25V 104 ±20% X7R 0603 | PCS | 3 | C702,C703,C707 |
| 0310643 | SMD CAPACITOR | 16V 105 ±20% Y5V 0603 | PCS | 2 | C701,C706 |
| 0000481 | CARBON FILM RESISTOR | 1/6W33 Ω ±5% SHAPED 7.5 | PCS | 1 | R708 |
| 0090238 | SMD RESISTOR | 1/16W 68Ω ±5% 0603 | PCS | 1 | R703 |
| 0000008 | CARBON FILM RESISTOR | 1/6W75Ω±5% | PCS | 1 | R705 |
| 0090181 | SMD RESISTOR | 1/16W 100Ω ±5% 0603 | PCS | 1 | R702 |
| 0000181 | CARBON FILM RESISTOR | 1/4W220Ω±5% | PCS | 1 | R701 |
| 0000013 | CARBON FILM RESISTOR | 1/6W330Ω±5% | PCS | 1 | R709 |
| 129 | CARBON FILM RESISTOR | 1/6W1K±5% SHAPED 7.5 | PCS | 1 | R711 |
| 0090017 | SMD RESISTOR | 1/16W 2.2K ±5% 0603 | PCS | 2 | R712,R710 |
| 0000034 | CARBON FILM RESISTOR | 1/6W4.7K±5% | PCS | 1 | R704 |
| 0390057 | MAGNETIC BEADS INDUCTOR | RH354708 | PCS | 8 | L701~L704,L707~L710 |
| 1090045 | ELECTRO-OPTIC TRANSFORMER | TX179ATW | PCS | 1 | JK703 |
| 1090024 | ELECTRO-OPTIC TRANSFORMER | TX179AT | PCS | 1 | JK703 |
| 1910094 | TERMINAL SOCKET | AV4-8.4-6G-5 | PCS | 1 | JK701 |
| 1910129 | TERMINAL SOCKET | SA-001-012 BLACK IRON PIECE SCREEN-SHIELDED | PCS | 1 | JK702 |
| 1860029 | SCART SOCKET | SCART-01 | PCS | 1 | JK704 |
| 1940026 | SOCKET | 3P 2.0mm | PCS | 1 | XS701 |
| 1940285 | CABLE SOCKET | 8P 1.0mm STRAIGHT DUAL LINE PLUG CONTACT POINT | PCS | 1 | XS702 |
| 0780050 | TRIODE | S8050D | PCS | 3 | V701~V703 |
| 2100010 | CONNECTION CORDS | Φ0.6 SHAPED 5mm | PCS | 1 | JP702 |
| 2100003 | CONNECTION CORDS | Φ0.6 SHAPED 7.5mm | PCS | 6 | JP701,JP703,JP707~JP709,R707 |
| 2100004 | CONNECTION CORDS | Φ0.6 SHAPED 10mm | PCS | 3 | JP704~JP706 |
| 1563777 | PCB | 7538-0 | PCS | 1 | |
| | | | | | |

**8. DECODE BOARD**

| MATERIAL CODE | MATERIAL NAME | SPECIFICATIONS | UNIT | QUANTITY | LOCATION |
|---|---|---|---|---|---|
| 0090001 | SMD RESISTOR | 1/16W 0Ω ±5% 0603 | PCS | 4 | R344,R349,R351,R305 |
| 0090272 | SMD RESISTOR | 1/16W1Ω±5% 0603 | PCS | 4 | R249,R251,R257,R258 |
| 0090004 | SMD RESISTOR | 1/16W 22Ω ±5% 0603 | PCS | 5 | R217,R219,R301,R302,R321 |
| 0090005 | SMD RESISTOR | 1/16W 33Ω ±5% 0603 | PCS | 12 | R215,R260,R261,R303,R329,R352~R356,R372,R256 |
| 0090237 | SMD RESISTOR | 1/16W 39Ω ±5% 0603 | PCS | 1 | R331 |
| 0090006 | SMD RESISTOR | 1/16W 75Ω ±5% 0603 | PCS | 5 | R332~R336 |
| 0090181 | SMD RESISTOR | 1/16W 100Ω ±5% 0603 | PCS | 4 | R259,R263,R269,R322 |
| 0700004 | SMD VOLTAGE REGULATOR DIODE | 5.1V ±5% 1/2W | PCS | 8 | ZD218~ZD221,ZD224~ZD227 |
| 0090007 | SMD RESISTOR | 1/16W 180Ω ±5% 0603 | PCS | 1 | R343 |
| 0090008 | SMD RESISTOR | 1/16W 220Ω ±5% 0603 | PCS | 1 | R330 |
| 0090009 | SMD RESISTOR | 1/16W 330Ω ±5% 0603 | PCS | 4 | R201~R203,R275 |

| | | | | | |
|---|---|---|---|---|---|
| 90011 | SMD RESISTOR | 1/16W 470Ω ±5% 0603 | PCS | 2 | R233,R234 |
| 0090014 | SMD RESISTOR | 1/16W 1K ±5% 0603 | PCS | 11 | R271,R272,R273,R274,R287,R290,R2117,R2120,R292,R254,R316 |
| 0090016 | SMD RESISTOR | 1/16W 1.5K ±5% 0603 | PCS | 4 | R228,R230,R231,R239 |
| 0090223 | SMD RESISTOR | 1/16W 2K ±5% 0603 | PCS | 3 | R211,R212,R315 |
| 0090017 | SMD RESISTOR | 1/16W 2.2K ±5% 0603 | PCS | 3 | R242,R244,R246 |
| 90019 | SMD RESISTOR | 1/16W 4.7K ±5% 0603 | PCS | 21 | R360~R362,R373~R376,R229,R240,R289,R293,R294,R314,R319,R320,R2130,R2131,R2134,R2135,R339,R340 |
| 0090020 | SMD RESISTOR | 1/16W 5.1K ±5% 0603 | PCS | 2 | R218,R250 |
| 0090021 | SMD RESISTOR | 1/16W 6.8K ±5% 0603 | PCS | 2 | R279,R276 |
| 0090022 | SMD RESISTOR | 1/16W 8.2K ±5% 0603 | PCS | 2 | R247,R248 |
| 0090254 | SMD RESISTOR | 1/16W 9.1K ±5% 0603 | PCS | 1 | R209 |
| 0090023 | SMD RESISTOR | 1/16W 10K ±5% 0603 | PCS | 22 | R205~R208,R222,R223,R226,R235,R237,R268,R270,R288,R323~R328,R342,R345,R346,R253 |
| 0090187 | SMD RESISTOR | 1/16W 12K ±5% 0603 | PCS | 2 | R216,R220 |
| 0090186 | SMD RESISTOR | 1/16W 7.5K ±5% 0603 | PCS | 2 | R2136,R2148 |
| 0090025 | SMD RESISTOR | 1/16W 20K ±5% 0603 | PCS | 2 | R210,R252 |
| 0090026 | SMD RESISTOR | 1/16W 22K ±5% 0603 | PCS | 2 | R232,R241 |
| 0090027 | SMD RESISTOR | 1/16W 27K ±5% 0603 | PCS | 1 | R318 |
| 0090028 | SMD RESISTOR | 1/16W 33K ±5% 0603 | PCS | 3 | R213,R214,R317 |
| 0090190 | SMD RESISTOR | 1/16W 36K ±5% 0603 | PCS | 2 | R2129,R2133 |
| 0090191 | SMD RESISTOR | 1/16W 39K ±5% 0603 | PCS | 1 | R291 |
| 0090029 | SMD RESISTOR | 1/16W 47K ±5% 0603 | PCS | 2 | R243,R245 |
| 0090034 | SMD RESISTOR | 1/16W 100K ±5% 0603 | PCS | 6 | R221,R224,R262,R341,R2111,R2112 |
| 0090109 | SMD RESISTOR | 1/16W 1MΩ ±5% 0603 | PCS | 3 | R227,R238,R313 |
| 0100019 | SMD RESISTOR NETWORKS | 1/16W33Ω ±5% 8P | PCS | 13 | RN201~RN205,RN207,RN208,RN211~RN215,RN218 |
| 90623 | SMD RESISTOR NETWORKS | 1/16W75Ω±5% 0603×4 8P | PCS | 3 | RN206,RN216,RN217 |
| 0100031 | SMD RESISTOR NETWORKS | 1/16W 4.7K±5% 0603 8P | PCS | 3 | RN209,RN219,RN220 |
| 0090609 | PRECISION SMD RESISTOR | 1/16W 100Ω ±1% 0603 | PCS | 1 | R338 |
| 0090626 | PRECISION SMD RESISTOR | 1/16W 200Ω±1% 0603 | PCS | 1 | R337 |
| 0003759 | CARBON FILM RESISTOR | 1/4W2.2 Ω ±5% | PCS | 1 | R236 |
| 2604379 | CD | CD11 16V10U±20%5×11C5 | PCS | 17 | TC206,TC207,TC209,TC210,TC212,TC213,TC214,TC225,TC226,TC232,TC233,TC236,TC240,TC241,TC247,TC251,TC266 |
| 2600029 | CD | CD11 16V47U±20%5×11 C5 | PCS | 7 | TC211,TC219,TC220,TC246,TC249,TC252,TC267 |
| 2601889 | CD | CD11 16V100U±20%6×12 C5 | PCS | 7 | TC215,TC218,TC255,TC201~TC203,TC216 |
| 2601819 | CD | CD11 16V220U±20%6×12 C5 | PCS | 9 | TC245,TC258,TC259,TC261~TC263,TC256,TC257,TC265 |
| 0310186 | SMD CAPACITOR | 50V 7P ±0.5P NPO 0603 | PCS | 3 | C224,C259,C260 |
| 0310042 | SMD CAPACITOR | 50V 15P ±5% NPO 0603 | PCS | 2 | C242,C243 |
| 0310043 | SMD CAPACITOR | 50V 22P ±5% NPO 0603 | PCS | 11 | C286~C291,C321,C324,C327,C330,C384 |
| 0310045 | SMD CAPACITOR | 50V 47P ±5% NPO 0603 | PCS | 9 | C218,C388,C389,C393,C394,C397~C400 |
| 0310192 | SMD CAPACITOR | 50V 56P ±5% NPO 0603 | PCS | 3 | C385,C2111,C2114 |
| 0310047 | SMD CAPACITOR | 50V 101 ±5% NPO 0603 | PCS | 6 | C336,C337,C370,C371,C372,C386 |
| 0310326 | SMD CAPACITOR | 50V 121 ±5% NPO 0603 | PCS | 1 | C217 |
| 0310656 | SMD CAPACITOR | 50V 201 ±5% NPO 0603 | PCS | 1 | C231 |
| 0310061 | SMD CAPACITOR | 50V 271 ±10% X7R 0603 | PCS | 4 | C320,C323,C326,C329 |
| 0310051 | SMD CAPACITOR | 50V 331 ±5% NPO 0603 | PCS | 4 | C322,C325,C328,C331 |
| 0310053 | SMD CAPACITOR | 50V 471 ±5% NPO 0603 | PCS | 2 | C333,C334 |
| 0310198 | SMD CAPACITOR | 50V 472 ±10% X7R 0603 | PCS | 1 | C392 |
| 0310054 | SMD CAPACITOR | 50V 681 ±5% NPO 0603 | PCS | 1 | C339 |

| | | | | | |
|---|---|---|---|---|---|
| 0310066 | SMD CAPACITOR | 50V 102 ±10% X7R 0603 | PCS | 26 | C202~C204,C210,C228,C262,C265~C268,C273,C277,C281,C282,C284,C293,C295,C297,C299,C302,C349~C351,C359~C361 |
| 0310231 | SMD CAPACITOR | 50V 122 ±10% X7R 0603 | PCS | 4 | C2122,C2129,C2112,C2115 |
| 310070 | SMD CAPACITOR | 50V 332 ±10% X7R 0603 | PCS | 4 | C213,C214,C234,C303 |
| 0310323 | SMD CAPACITOR | 50V 392 ±10% X7R 0603 | PCS | 1 | C227 |
| 0310200 | SMD CAPACITOR | 50V 822 ±10% X7R 0603 | PCS | 2 | C314,C315 |
| 0310072 | SMD CAPACITOR | 50V 103 ±10% X7R 0603 | PCS | 28 | C212,C269~C272,C274~C276,C278~C280,C283,C304,C342,C343,C352~C358,C362~C367 |
| 0310203 | SMD CAPACITOR | 50V 273 ±10% X7R 0603 | PCS | 1 | C216 |
| 310056 | SMD CAPACITOR | 16V 473 ±10% X7R 0603 | PCS | 1 | C206 |
| 0310207 | SMD CAPACITOR | 50V 104 ±20% X7R 0603 | PCS | 80 | C201,C205,C207~C209,C211,C215,C219~C223,C225,C226,C233,C235~C241,C244,C245,C247~C255,C257,C258,C261,C264,C292,C294,C296,C298,C301,C305~C313,C316~C318,C332,C335,C338,C340,C341,C345,C346,C368,C373~C382,C387,C391,C2138,C2141,C2155,C2156,C2157,C348 |
| 0310543 | SMD CAPACITOR | 50V 104 ±10% X7R 0603 | PCS | 80 | C201,C205,C207~C209,C211,C215,C219~C223,C225,C226,C233,C235~C241,C244,C245,C247~C255,C257,C258,C261,C264,C292,C294,C296,C298,C301,C305~C313,C316~C318,C332,C335,C338,C340,C341,C345,C346,C368,C373~C382,C387,C391,C2138,C2141,C2155,C2156,C2157,C348 |
| 0310222 | SMD CAPACITOR | 25V 104 ±20% X7R 0603 | PCS | 80 | C201,C205,C207~C209,C211,C215,C219~C223,C225,C226,C233,C235~C241,C244,C245,C247~C255,C257,C258,C261,C264,C292,C294,C296,C298,C301,C305~C313,C316~C318,C332,C335,C338,C340,C341,C345,C346,C368,C373~C382,C387,C391,C2138,C2141,C2155,C2156,C2157,C348 |
| 0310234 | SMD CAPACITOR | 16V 105 +80%-20% Y5V 0603 | PCS | 4 | C229,C230,TC205,TC250 |
| 0390096 | SMD INDUCTOR | 1.8UH ±10% 1608 | PCS | 4 | L211~L214 |
| 0390355 | SMD INDUCTOR | 4.7UH ±10% 1608 | PCS | 2 | L207, L208 |
| 0390095 | SMD MAGNETIC BEADS | FCM1608K-221T05 | PCS | 12 | L203,L227,L215~L218,L221~L224,L228,L230 |
| 3900579 | MAGNETIC BEADS INDUCTOR | RH354708 | PCS | 7 | L201,L202,L204~L206,L220,L226 |
| 0700007 | SMD DIODE | 1N4148 | PCS | 3 | D201,D202,D216 |
| 0700001 | SMD DIODE | LS4148 | PCS | 3 | D201,D202,D216 |
| 0700002 | SMD DIODE | LL4148 | PCS | 3 | D201,D202,D216 |
| 0700056 | SMD DUAL DIODE | MMBD4148SE SOT-23 | PCS | 4 | D203~D205,D210 |
| 0700008 | SMD VOLTAGE REGULATOR DIODE | 5.6V ±5% 1/2W | PCS | 1 | D215 |
| 7800509 | TRIODE | S8050D | PCS | 2 | Q215,Q216 |
| 7800499 | TRIODE | S8550D | PCS | 2 | Q213,Q214 |
| 780276 | SMD TRIODE | GS9013 SOT-23 | PCS | 3 | Q224,Q233,Q234 |
| 780062 | SMD TRIODE | 9014C | PCS | 3 | Q217,Q220,Q229 |
| 780063 | SMD TRIODE | 9015C | PCS | 1 | Q204 |
| 780129 | SMD TRIODE | 8550D(160-300) SOT-23 | PCS | 1 | Q225 |
| 780085 | SMD TRIODE | 8050D | PCS | 1 | Q223 |
| 780040 | SMD TRIODE | 3904(100-300) SOT-23 | PCS | 1 | Q231 |
| 780193 | SMD TRIODE | 2SK3018 | PCS | 2 | Q203,Q230 |
| 780115 | SMD TRIODE | 2SB1132 | PCS | 2 | Q201,Q202 |
| 881604 | IC | AT24C16 SOP | PCS | 1 | U223 |
| 882022 | IC | CS4340A SOP | PCS | 2 | U207,U213 |

| | | | | | |
|---|---|---|---|---|---|
| 882262 | IC | K4S641632H-TC60 TSOP | PCS | 2 | U205,U208 |
| 881674 | IC | LM393D SO8 | PCS | 1 | U222 |
| 882105 | IC | LM393 SO8 | PCS | 1 | U222 |
| 882359 | IC | AAI393 SO8 | PCS | 1 | U222 |
| 880300 | IC | M11B416256A-25 SOJ | PCS | 1 | U215 |
| 882502 | IC | MK-6000B(4504) PQFP | PCS | 1 | U209 |
| 881742 | IC | F4558 SOP | PCS | 1 | U219 |
| 880562 | IC | 4580 SOP | PCS | 1 | U219 |
| 880361 | IC | 4558 SOP | PCS | 1 | U219 |
| 880322 | IC | MM74HCU04M SOP | PCS | 1 | U214 |
| 880513 | IC | HCU04 SOP | PCS | 1 | U214 |
| 881182 | IC | LM1117MP-ADJ SOT-223 | PCS | 1 | U224 |
| 881969 | IC | IP1117-ADJ SOT-223 | PCS | 1 | U224 |
| 0882461 | IC | AZ1117H-ADJ SOT-223 | PCS | 1 | U224 |
| 0882500 | IC | AML3298 QFP | PCS | 1 | U202 |
| 0881378 | IC | BA5954FP HSOP | PCS | 1 | U203 |
| 0882504 | IC | R27V3202F TSOP | PCS | 1 | U212 |
| 0882503 | IC | SAM2133B TQFP | PCS | 1 | U211 |
| 0882501 | IC | VT7208 LQFP | PCS | 1 | U201 |
| 0960271 | CRYSTAL OSCILLATOR | 9.6MHz±20PPM 49-S 20P | PCS | 1 | X201 |
| 0960020 | CRYSTAL OSCILLATOR | 27.00MHz 49-S | PCS | 1 | X203 |
| 0960022 | CRYSTAL OSCILLATOR | 33.8688MHz 49-S | PCS | 1 | X202 |
| 1940285 | CABLE SOCKET | 8P 1.0mm STRAIGHT DUAL LINE PLUG | PCS | 1 | XS207 |
| 1940044 | SOCKET | 9P 2.0mm | PCS | 1 | XS202 |
| 1940008 | SOCKET | 8P 2.0mm | PCS | 1 | XS209 |
| 1940094 | CABLE SOCKET | 24P 0.5mm SMD WITH CLASP | PCS | 1 | XS203 |
| 1940024 | SOCKET | 5P 2.0mm | PCS | 1 | XS206 |
| 1940005 | SOCKET | 6P 2.0mm | PCS | 1 | XS205 |
| 1632406 | PCB | 2538-1 | PCS | 1 | |
| | | | | | |