TECHNICAL SHEET

Fixed Audience Seating
Vienna Series

Wenger®
Your Performance Partner

- All steel components are durable black powder-coat paint finish.
- Manufacturer's standard fabrics, veneers and stains are available in a variety of materials and finishes.
- Counterweight/counter-balance seat rise mechanism.
- Available in five chair widths: 19", 20", 21", 22" and 23" (483, 508, 533, 559 and 584 mm).
- Standard seat number and row letter plates in plastic with aluminum or brass finish.
- Standard seat back angles can be set at 18, 22 and 26°.
- ANSI/BIFMA X5.4 - 2012.
- ASTM F851-87 (2000).
- CAL TB117/CAL TB133 also available.
- Environmental attributes and LEED compliance for this product can be found at www.wengercorp.com/GREEN or by contacting your Wenger representative.
- Ten-year warranty.

Materials
- Injection molded polypropylene copolymer IF-727.
- High-impact polypropylene outer back.
- High-impact polypropylene seat pan.
- High-impact polypropylene arm rest.
- Full upholstered end panel.
- Cold molded foam cushions.
- Back cushion foam density 3.43± lb/ft^3 (55± 5kg/m^3).
- Seat cushion foam density 3.75± lb/ft^3 (60± 5kg/m^3).

Dimensions
- Overall seat back height is 39.4" (1001 mm).
- Seat height of 17.3" (439 mm).
- Chair depth (back of chair to front edge of seat in the "down" position) is 28.7" (729 mm) at 18°.
- With the seat in the "up" position, the chair depth is 21.7" (551 mm) at 18°.
- Seat cushion is 4" (102 mm) minimum thickness, high-resiliency cold molded polyurethane foam.
- Back cushion is 5" (127 mm) minimum thickness, high-resiliency contoured cold molded polyurethane foam.
- Back cushion shaped with lumbar support provides both comfort and support.

Additional Options
- Seats can be customized to meet customer requirements.
- Customer's Own Material (COM) fabric selection is also available.
- Rolling hardware available for moveable seats to provide wheelchair spacing.
- ADA Swing out handicap aisle access.
- Cup holder.
- Aisle lights.
- Riser mount seating standards.
- Wood arm rests and end standards available.
- California Technical Bulletin 133 compliant.
- Blank row/seat/donor plates for engraving.



Dimensions

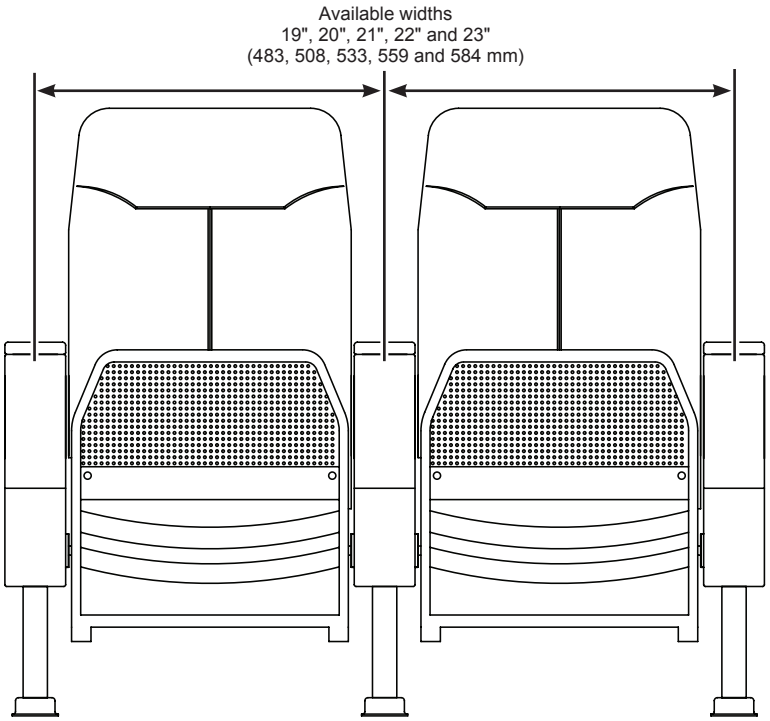

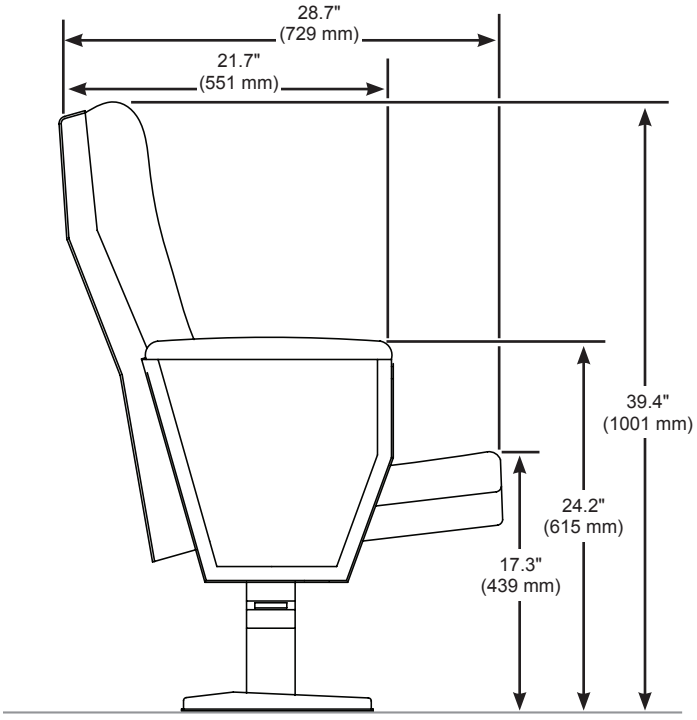

© 2017 Wenger Corporation
USA/2017-12/W

WENGER CORPORATION Phone 800.4WENGER (493-6437) Worldwide +1.507.455.4100 | Fax 507.455.4258 Worldwide +1.507.774.8576
Parts & Service 800.887.7145 | Canada Office 800.268.0148 | Web wengercorp.com | 555 Park Drive, PO Box 448 | Owatonna | MN 55060-0448

JR CLANCY Phone 800.836.1885 Worldwide +1.315.451.3440 | Fax 877.836.1885 Worldwide +1.315.451.1766 | Web jrclancy.com
7041 Interstate Island Road | Syracuse | NY 13209-9713

GEARBOSS Phone 800.493.6437 | email gearboss@wengercorp.com | Web gearboss.com | 555 Park Drive, PO Box 448 | Owatonna | MN 55060-0448