LASER

Analog Laser Displacement Transducer



LAM Series

Key-Features:

- *Available measurement ranges: 0.5 to 200 mm*
- *Resolution up to 0.2 µm , linearity up to ±1 µm*
- *Excellent for highly dynamic measurements*
- *Measuring frequency up to 100 kHz*
- *Sampling rate up to 400 kHz*
- *Working temperature 0 to 50 °C*
- *LAM external evaluation electronics*
- *Analog output 4...20 mA, -10...10 V*
- *with Ethernet Interface*

Content:

Measuring Principle	***....2***
Installation Instructions	***....3***
Technical Data LAM-S	***....4***
Technical Data LAM-F	***....5***
Technical Drawing	***....6***
Electrical Connection	***....7***
Order code	***....9***

05.10.16

OVERVIEW

The optical position measuring system LAM is used in touchless measurement applications. LAM distance sensors are available in various models so as to offer the suitable sensor type for any application.

Due to the high measuring frequency of up to 100 kHz this series is particularly suited for highly dynamic measurements. This high resolution of up to 0.05 µm guarantees reliable use in sophisticated measurements in quality control.

MEASURING PRINCIPLE

The LAM laser sensors are used for touchless position, or presence measuring of objects. They utilise the triangulation method for measuring**.** The laser beam hits the object as a small spot and the sensor's receiver defines the position of this spot. The relation of the angles is used to calculate the distance. The possible resolution and the accuracy change with the distance d: If d is near the sensor, it causes a large change to the angle a1. If d is farther away, the change to the angle is much smaller a2 (see drawing).
The middle of the measuring rang is the reference distance. A light spot is focused on the object measured. The technology uses light impulses for very low dependence on constant ambient light. The projected light spot is mapped onto a position sensor through use of a lens. Diffuse reflection of the light of the light spot is important for the measurement. Depending on the reflectance of the area measured a fine self-actuated regulating circuit automatically adjusts the light intensity of the light source.
If the intensity of the reflected light is too low (min. 10% surface reflection), this will trigger error message F1: "too little light". With highly reflective surfaces reflecting the transmitting light directly into the reception optics will trigger error message F2: "too much light/reflection". Both errors are indicated by logic signals and LED displays. Analogue voltage describing the light intensity is delivered as additional information on the lighting conditions.
The output voltage "Distance" on pin 1 is emitted linear to the distance of the object. In addition to signal output ±10 V the output signals 4...20 mA and an Ethernet interface are available (optional 0...10 V, 0...5 V, ±5 V). Two comparators can be used to adjust the limits for the object distance measured. Thus the ranges too close, OK or too far are defined. The respective range can be identified by the LED display..

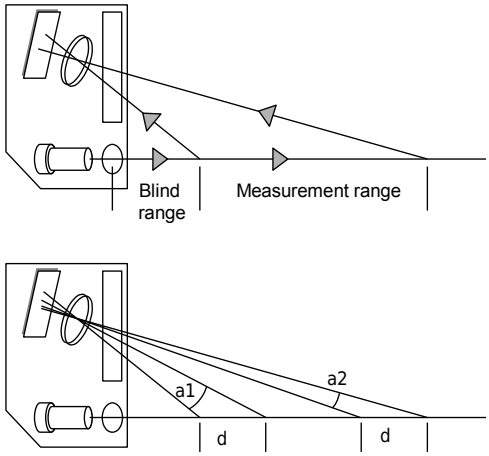

Self test

Permanent monitoring of the reflected light tests if an object is within the measuring ranges and the intensity of the reflected light is adequate.

Response time and frequency response

The rise time of the analog output is particularly fast in laser sensors. On the LAM-N it is ca. 100 µs , 50 µs for the LAM-S and 5 µs for the LAM-F for rising to > 90% of the end value.
The cutoff frequency of the low pass filter can be adjusted with dip -switches (under the cover in the lid of the electronics unit).
The internal sampling rate of the sensor is not impacted by the dip-switch-settings. The filter frequencies specified on pages 9 and 10 correspond to the -3 dB bandwidth of the low pass filter. Higher frequencies and noise are reduced more and more, thus increasing the measuring accuracy.
Example: Set to 2.5 kHz a recorded oscillation of a frequency of 2 kHz is transmitted without considerable reduction. A frequency of 10 kHz, however, would be severely reduced.

Sensor head installation

To achieve absolutely accurate distance measurements, the light measuring beam must be aligned square to the measuring surface. Any tipping will geometrically cause a greater measured displacement.

When installing the laser measuring head be sure the laser light beam can neither directly nor indirectly (e.g. through reflection) hit the human eye. The laser warning decal must be applied to the sensor where it is clearly visible.

To adjust, use the MIN, OK and MAX LEDs.

At delivery the MIN and MAX values are set to the limits of the measuring range. Whilst the OK LED is lit the object is within the measuring range and reflecting adequate light.

INFORMATION

Surface measurement error

Surface-related measurement errors impacted by material and colour

Any materials, e.g. metal, plastic, ceramics, rubber and paper, can be measuring objects. Use only needs to be reviewed on an individual basis with highly reflective surfaces or liquids.

Surface reflectance

The sensor requires a minimum of 10% surface reflection to function properly. Only diffuse reflection can be used for measurement.

Lateral flare

When projecting the light spot slight flare also occurs, which is reflected laterally by the measuring point, and then reaches the receiver. Highly reflective parts within the flare area close to the measuring point reflecting the flare directly to the receiver can result in measurement errors. Homogeneously scattering objects with the same level of reflectance do not cause this error. If the reflecting range is outside of the measuring point the errors can in worst case be 2%.

Beam entering the measured material

With slightly transparent plastics or cloudy liquids the measuring beam penetrates the medium to a certain level before the diffusely reflected light is reflected. Here the true measuring plane must be expanded by the penetration depth. In individual cases this can only be determined experimentally.

Striped objects

If the measuring objects have light/dark stripes, e.g. wood, the sensor must be mounted with the optical axis parallel to the direction of the stripe (see drawing right). The LAM lasers with its small measuring points are ideally suited for this.

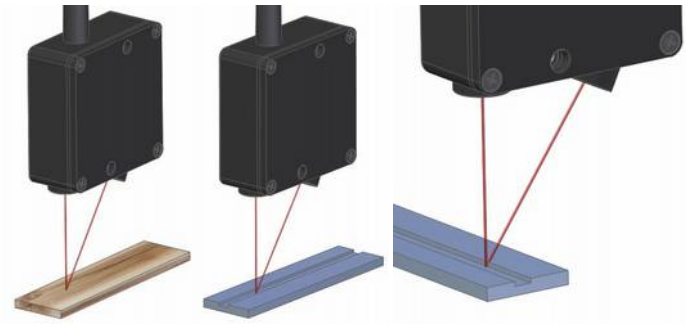

Light/ dark change within the measuring point

If a distance is measured at a point where the material transitions from a diffusely reflecting to a reflective material, hence has a strong change in the reflection factor, measurement errors can result. Based on the surface, here the maximum of the light intensity is not at the centre of the measuring point. However, if the line of the transition is in the direction of the optical axis, the error is minimal.

Change of the surface reflection factor during measurement

The LAM sensor features an automatic light intensity adjustment to adjust to well or low reflecting objects. If the surface reflection changes during the measurement it automatically readjusts accordingly.

Angle dependency of measurements

If the sensor is not square to the object surface the measurement has low angle dependency. On matt surfaces with high diffuse reflection the angle dependency is low, with reflective surfaces it is higher.

The object's angles of rotation around the x-axis can be reached up to ±30 ° without considerable measurement error, around the y-axis up to ±15 °. The measurement error shows to be a change between the output voltage / distance relation. If the angle is constant it can be eliminated through readjustment.

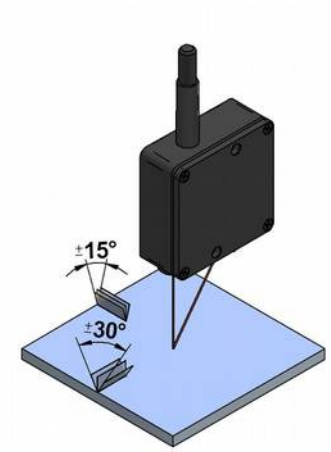

TECHNICAL DATA – SERIES LAM-S

- for dynamic measurements
- low noise
- measuring frequency up to 10 kHz
- sample rate 54 kHz
- Ethernet interface







		LAM-S-0,5	LAM-S-2	LAM-S-4	LAM-S-10	LAM-S-20	LAM-S-50	LAM-S-100	LAM-S-200
Measuring range	[mm]	23,75…24,25	23…25	22…26	40…50	55…75	115…165	170…270	240…440
Cutoff frequency CF		adjustable: 20 Hz …10 kHz, (-3 db) please see page 10 for DIP switch settings and corresponding cutoff frequencies							
Resolution at CF 10 kHz	[µm]	0.3	1.3	2.6	6.5	13.0	32.5	65.0	200.0
Resolution at CF 20 Hz	[µm]	0.02	0.10	0.20	0.50	1.00	2.50	6.00	20.00
Linearity error	[µm]	±1	±4	±8	±20	±40	±100	±200	±400
Sampling rate	[kHz]	54 (at the output of the electronics)							
Analog output		±10 V, 4…20 mA, (optional: ±5 V, 0…20 mA, 0…10 V, 0…5 V)							
Output impedance	[Ω]	approximately 0 (10 mA max.)							
Temperature drift	[%/°K]	0.02							
Light intensity	[VDC]	0…10: Signal quality: <3 = risk of underexposure, ~5 = excellent, >8 = risk of overexposure							
Digital output		Ethernet TCP / IP							
Max. extraneous light	[Lux]	20000,00							
Light source		Red pulsed laser diode, wavelength 650…670 nm							
Laser class		2,00							
Isolation voltage	[VDC]	Sensor head IP64, electronics IP40							
Permissible vibration		5 g bis 1 kHz (20 g optional)							
Housing material		Aluminium							
Protection class		Sensor head IP64. electronics IP40							
Operating temperature	[°C]	0…50							
Beam shape									
Spot laser, ø	[mm]	0.1	0.2	0.3	0.6	0.9	1.5	1.5	2.0
Output signal		±10 V, 4…20 mA, Ethernet, (optional: ±5 V, 0…20 mA, 0…10 V, 0…5V)							
Supply		24 VDC / 250 mA (10…30 VDC)							
External electronics		included							

Note: Specifications on linearity and resolution refer to measuring a matt, white reference surface.

RESOLUTION AS FUNCTION OF FILTERSETTINGS

Sensor-Type: LAM-S-10, measurement range 10 mm. The measurement was recorded with an analog oscilloscope

Measurement on a white target		
LAM-S-10	**Noise ***	**Resolution**
10.000 Hz	13 mV	6.5 µm
7000 Hz	12 mV	6.0 µm
4000 Hz	8 mV	4.0 µm
1000 Hz	6 mV	3.0 µm
250 Hz	3 mV	1.5 µm
100 Hz	2 mV	1.0 µm
25 Hz	1.5 mV	0.7 µm
20 Hz	1.0 mV	0.5 µm

Measurement on a black target		
LAM-S-10	**Noise ***	**Resolution**
10.000 Hz	200 mV	100 µm
7000 Hz	180 mV	90 µm
4000 Hz	150 mV	75 µm
1000 Hz	100 mV	50 µm
250 Hz	60 mV	30 µm
100 Hz	40 mV	20 µm
25 Hz	20 mV	10 µm
20 Hz	15 mV	7.5 µm

* measured at analog output 10 V = 10 mm

TECHNICAL DATA – SERIES LAM-F

- for highly dynamic measurements
- measuring frequency up to 100 kHz
- Sample rate 400 kHz
- Ethernet interface







		LAM-F-0,5	LAM-F-2	LAM-F-4	LAM-F-10	LAM-F-20	LAM-F-50	LAM-F-100	LAM-F-200
Measuring range	[mm]	23.75…24.25	23…25	22…26	40…50	55…75	115…165	170…270	240…440
Cutoff frequency CF		adjustable: 230 Hz ...100 kHz, (-3 db) please see page 9 for DIP switch settings and corresponding cutoff frequencies							
Resolution at CF 100 kHz	[µm]	0.8	3.5	7.0	17.5	35.0	50.0	100.0	330.0
Resolution at CF 230 Hz	[µm]	0.05	0.2	0.4	1.0	2.0	7.5	15.0	50.0
Linearity error	[µm]	±1.5	±6	±12	±30	±60	±150	±300	±600
Sampling rate	[kHz]	400 (at the output of the electronics)							
Analog output		±10 V, 4…20 mA, (optional: ±5 V, 0…20 mA, 0…10 V, 0…5V)							
Output impedance	[Ω]	approximately 0 (10 mA max.)							
Temperature drift	[%/°K]	0,02							
Light intensity output	[VDC]	0…10: Signal quality: <3 = risk of underexposure, ~5 = excellent, >8 = risk of overexposure							
Digital output		Ethernet TCP / IP							
Max. extraneous light	[Lux]	20000,00							
Light source		red pulsed laser diode, wavelength 650…670 nm							
Laser class		2,00							
Isolation voltage	[VDC]	200 (0 V against housing)							
Permissible Vibration		5 g bis 1 kHz (20 g optional)							
Housing material		Aluminium							
Protection class		Sensor head IP64, electronics IP40							
Operating temperature	[°C]	0…50							
Beam shape									
Spot laser, ø	[mm]	0.1	0.2	0.3	0.6	0.9	1.5	1.5	2.0
Output signal		±10 V, 4…20 mA, Ethernet, (optional: ±5 V, 0…20 mA, 0…10 V, 0…5V)							
Supply		24 VDC / 250 mA (10…30 VDC)							
External electronics		included							

Note: Specifications on linearity and resolution refer to measuring a matt, white reference surface.

RESOLUTION AS FUNCTION OF FILTERSETTINGS

The measurement was done on a white target and recorded with an analog oscilloscope

LAM-F-4	Noise	Resolution
100000 Hz	32 mV	6.4 µm
70000 Hz	30 mV	6.0 µm
40000 Hz	22 mV	4.4 µm
10000 Hz	12 mV	2.4 µm
2500 Hz	8 mV	1.6 µm
1000 Hz	5 mV	1.0 µm
250 Hz	3 mV	0.5 µm
230 Hz	2 mV	0.4 µm

LAM-F-0,5	Noise	Resolution
100000 Hz	30 mV	0.75 µm
70000 Hz	27 mV	0.68 µm
40000 Hz	22 mV	0.55 µm
10000 Hz	12 mV	0.30 µm
2500 Hz	8 mV	0.20 µm
1000 Hz	5 mV	0.13 µm
250 Hz	4 mV	0.10 µm
230 Hz	4 mV	0.10 µm

TECHNICAL DRAWING LAM-S, LAM-F

LAM-S-0,5
LAM-F-0,5

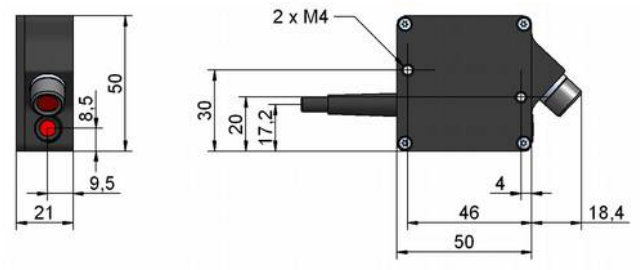

LAM-S-2 / LAM-S-4
LAM-F-2 / LAM-F-4

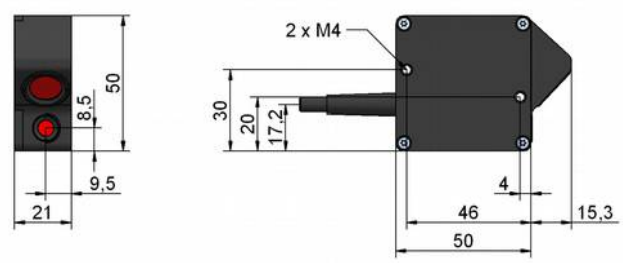

LAM-S-10
LAM-F-10

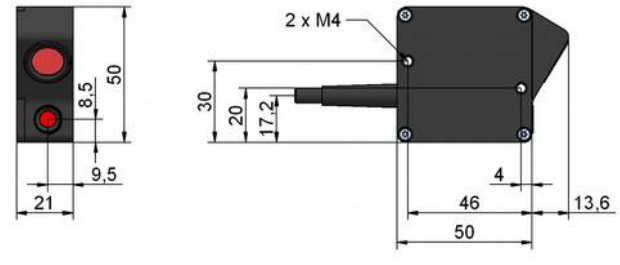

LAM-S-20
LAM-F-20

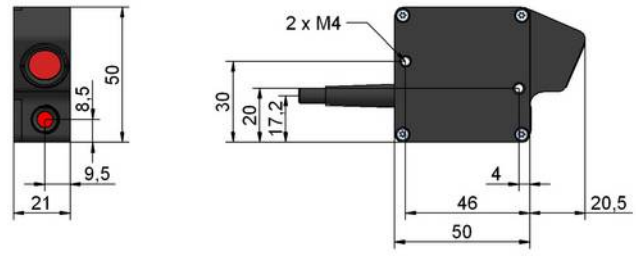

LAM-S-50 / LAM-S-100 / LAM-S-200
LAM-F-50 / LAM-F-100 / LAM-F-200

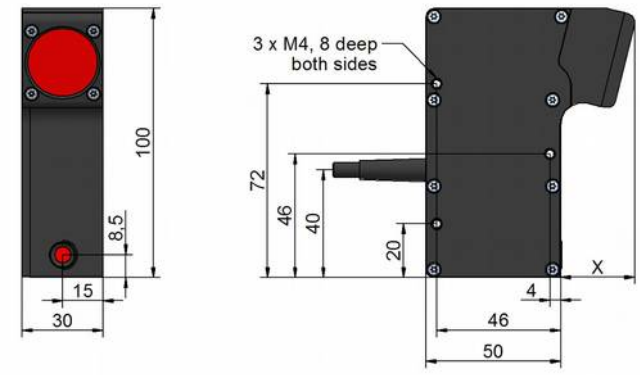

Type	x
50	26,6
100	25,8
200	27,5

Electronics housing LAM-S / LAM-F

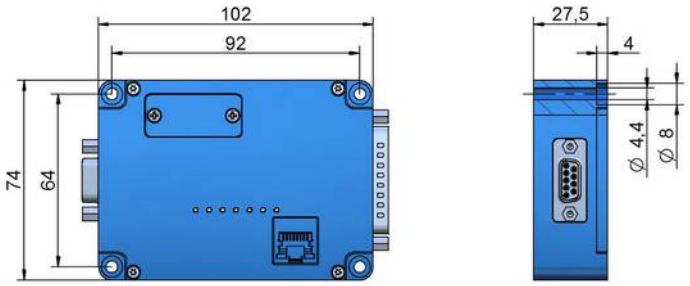

PIN ASSIGNMENT / DIP SWITCH SETTINGS LAM-S, LAM-F

Assignment SUB-D connector, 25-pin

PIN	Function	Colour
1	Distance output ±10 V (0…10 V, ±5 V, 0…5 V)*	white
2	Error+24 V/ 10 mA	red
3	Sync signal output	
5	Digital output OK 0/ 24 V	pink
6	Distance output 4…20 mA (0…20 mA)*	blue
8	Mass 0 V	yellow
14	Analogue Mass 0 V	brown
15	Sync signal input	
16	Digital output MAX, 0/ 24 V	purple
17	Distance input 0…5V	
18	Mass	
19	Digital output MIN, 0/ 24 V	black
20	Light intensity output 0…10 V	grey
21	+24 V supply	green
Housing	EMV	screen

*optional



Electronics LED Status

LED	Function	Color	operating
Power	Power ok	green	lights up
Link	Ethernet Link operating	yellow	lights up
10	Ethernet Link activity	yellow	flashing rapidly
MAX	maximum threshold	red	lights up
OK	object within range	green	lights up
MIN	minimum threshold	red	lights up
Error	FPGA self test ok	red	off
	object out of range	red	lights up

LAM-S Dip switch / filter settings

Frequency	S1	S2	S3	S4	S5	S6
10 kHz	-	-	-	-	-	-
7 kHz	X	-	-	-	-	-
4 kHz	-	X	-	-	-	-
1 kHz	-	X	X	-	-	-
250 Hz	-	-	-	X	-	-
100 Hz	-	-	-	-	X	-
25 Hz	-	-	X	X	-	X
20 Hz	X	X	X	X	X	X

X = switch closed

- = switch open

Factory setting: S1 + S2 closed

LAM-F Dip switch / filter settings

Frequency	S1	S2	S3	S4	S5	S6
100 kHz	-	-	-	-	-	-
70 kHz	X	-	-	-	-	-
40 kHz	X	X	-	-	-	-
10 kHz	-	X	X	-	-	-
2,5 kHz	-	-	-	X	-	-
1 kHz	-	-	-	-	X	-
250 Hz	-	-	-	-	X	X
230 Hz	X	X	X	X	X	X

X = switch closed

- = switch open

Factory setting: S1 + S2 closed

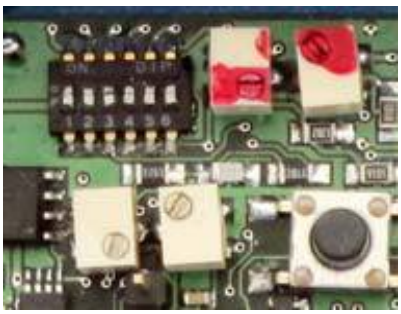

The Dip-switch (under the cover inside the lid for the electronics unit) is used to adjust the frequency of the low pass filter. Switch 1 is on the left, switch 6 on the right.
Never change the potentiometers.
The internal sampling rate of the sensor is not impacted by the Dip-Switch-settings. The filter frequencies specified correspond with the -3 db bandwidth of the low pass filter. Higher frequencies and noise are reduced more and more.
Example: Set to 2.5 kHz a recorded oscillation of a frequency of 2 kHz is transmitted without considerable reduction. A frequency of 10 kHz, however, would be severely reduced.

ETHERNET CABLE PIN ASSIGNMENTS, RJ45, CROSSED

PIN	Signal	Plug A
1	Transmitted data +	green + white
2	Transmitted data -	green + white
3	Date received +	red + white
4	not used -	blue
5	not used +	blue + white
6	Date received -	red + white
7	not used +	brown + white
8	not used -	brown

PIN	Signal	Plug B, crossed
1	Date received +	red + white
2	Date received -	red
3	Transmitted data +	green + white
4	not used -	blue
5	not used +	blue + white
6	Transmitted data -	green
7	not used +	brown + white
8	not used -	brown

Hint: direct connection between sensor and network card requires a cross Ethernet cable.
If an Ethernet-switch is interconnected, Ethernet cables assigned 1:1 can be used. If the Ethernet-switch automatically recognises the line polarity due to its "Autosense + AutoMDI"-function it doesn't matter if the cables used are assigned 1:1 or crossed.

INCLUDED IN DELIVERY – SERIES LAM

- Sensor with 2 m sensor cable
- External electronics
- 25 pin SUB-D plug, solderable
- Test log



ORDER CODE

LAM — □ — □ — □

10 kHz measuring frequency, Ethernet, 2 m cable	S
100 kHz measuring frequency, Ethernet, 2 m cable	F

Measurement Range	
0.5, 2, 4, 10, 20, 50, 100, 200 mm	e.g. 10

	Version
-	Standard
O	Sensor with additional options

	Options
LAM-10V	Output signal 0...10 V
LAM-5V5V	Output signal ±5 V
LAM-5V	Output signal 0...5 V
LAM-20A	Output signal 0...20 mA
LAM-HD	Vibration protection, 20 g
LAM-3R	Increased laser power
LAM-IF	Interference filter

Standard: all models with analog output ±10 V and 4...20 mA

OPTIONS AND ACCESSORIES

Accessories	
LAM-AG	Protective glass replacement (2 pieces)
LAM-KUEHL	Heat sink, attaches to sensor from outside (only on request)

Options	
LAM-10V	Signal output 0...10 V
LAM-5V5V	Signal output ±5 V
LAM-5V	Signal output 0...5 V
LAM-20A	Signal output 0...20 mA
LAM-HD	Sensor head vibration protection: 20 g / 1 kHz
LAM-3R	Increased laser power
LAM-IF	Interference filter



General safety instructions
Attention radiation laser.
Do not stare into beam.
Do not point the laser beam towards someone's eye.
It is recommended to stop the beam by a matte object or matte metal shield.
Laser regulations require the power to the sensor be switched off when turning off the whole system this sensor is part off.

Subject to change without prior notice.

WayCon Positionsmesstechnik GmbH
email: info@waycon.de
internet: www.waycon.de

Head Office
Mehlbeerenstr. 4
82024 Taufkirchen
Tel. +49 (0)89 67 97 13-0
Fax +49 (0)89 67 97 13-250

Office Cologne
Auf der Pehle 1
50321 Brühl
Tel. +49 (0)2232 56 79 44
Fax +49 (0)2232 56 79 45