

ET-577 – 24" (1920 x 1080 Full HD)

Highlights

- Remote access to a single PC / multiple PCs from any operator terminal
- Cost-efficient hardware, central data management
- LED backlighting technology and touch screen as standard
- Rugged design and IP66 (front side)
- Without additional enclosure protection suitable for use in hazardous areas
- Many enclosure and mounting options

Explosion Protection

Explosion Protection Examination Certificate
BVS 11 ATEX E 102 X
BVS 11.0075X

Explosion Protection Identification
ATEX directive 94/9/EG
II 2(1) G Ex e q [ia op is Ga] IIC T4 Gb
II 2(1) D Ex tb IIIC [ia op is Da] IP65 T110°C Db

IECEx
Ex e q [ia op is Ga] IIC T4 Gb
Ex tb IIIC [ia op is Da] IP65 T110°C Db

GOST-R
1Ex e q [ia op is Ga] IIC T4 Gb
Ex tb IIIC [ia op is Da] IP65 T110°C Db

Ingress protection

Front side IP66, back side IP65

Firmware/Software

- PC remote control over: KVM / VNC / RDP / Netc@p
- Authorized access only: Closed system restricted to authorized individuals
- Optional password activation system
- Optional block user input
- Configuration export/import
- Fallback connections provide high system availability

Description

The ET-577 with high bright 24" widescreen is the Thin Client of the future, suitable for use in for hazardous areas, Zones 1, 21.

The 1920 x 1080 resolution is provided by many process control system suppliers. The ET-577s are available either as front-mounted control panel module with front frame, or they can be rear-mounted into a third-party enclosure without front frame.
Thin Clients are the best solution when it comes to flexible data access – via the IP address it is possible to access any PC or any network from any Thin Client, thus providing the operator with the best possible flexibility on site. The ET-577 communicates over standard Ethernet (TCP/IP) or fiber optic, thus enabling RDP, VNC and Netc@p, as well as LAN, WLAN and Internet.

All HMIs of the ET-500 series come with our special Remote HMI firmware for enhanced Thin Client security. Designed as a "closed system" with the highest level of security and protection against external manipulations, this Remote HMI firmware controls network communications, password assignment, block operator input, and IP address assigment.
In the rare case of a system failure, the BACKUP / RECOVERY solution via USB stick allows to immediately restore the original state.

We reserve the right to make any changes at any time according to technological progress or further development.

R. STAHL HMI Systems GmbH | Im Gewerbegebiet Pesch 14 | D 50767 Köln | www.stahl-hmi.de
Tel. +49 (221) 59808-200 | Fax: +49 (221) 59808-260 | Email: office@stahl-hmi.de

ET-577 – 24" (1920 x 1080 Full HD)

NO. DS200640150104 | EN
2014 | V 01.02.00

Operating Principle

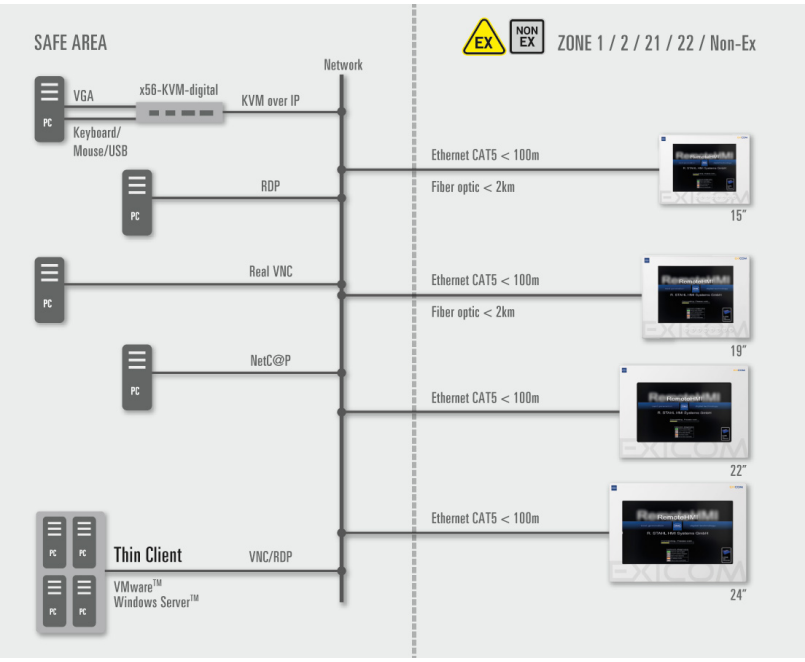

We reserve the right to make any changes at any time according to technological progress or further development.

R. STAHL HMI Systems GmbH | Im Gewerbegebiet Pesch 14 | D 50767 Köln | www.stahl-hmi.de
Tel. +49 (221) 59808-200 | Fax: +49 (221) 59808-260 | Email: office@stahl-hmi.de

ET-577 – 24" (1920 x 1080 Full HD)

NO. DS200640150104 | EN
2014 | V 01.02.00

Technical Data

Mounting design	Front panel mounting
Display	61 cm (24") TFT color display 16.7 million colors Full HD 1920 x 1080 Aspect ratio 16:9 Brightness 300 cd/m² Contrast 1000:1 5 wire resisitive touch screen optional
Backlighting	LED technology Service life 50,000 h at +20 °C
Display function keys	-
External keyboard	Yes (optional), 107 keys, incl. trackball / joystick / mouse / touch pad (Ex ia)
Operating system	Remote HMI firmware based on Windows Embedded Standard 2009 intrinsically safe Thin Client system
Interfaces	1 x Ethernet 10/100BaseTx (Ex e) or FO 100BaseFx, 100 Mbit (Ex op is) 2 x USB (Ex ia) 1 x USB (Ex e) 2 x USB (Ex ia) (keyboard, pointing device) 1 x RS-232 (Ex e) 1 x Audio line out (Ex e) **Optional interfaces** 1 x ReaderBox for card reader / barcode scanner WLAN via USB (Ex e)
Dimensions (W x H x D)	660 x 475 x 110 mm (23.62 x 18.7 x 4.33")
Cutout	615 x 435 (+/- 0.5) mm (24.21 x 17.13 (+/- 0.02)")
Mounting position	horizontal / vertical
Weight	32 kg (70,55 lbs)
Power supply	24 VDC (max. = 3 A) 100 - 240 VAC (max. = 1 A)
Permissible ambient temperature ranges	Operation -20 °C up to +60 °C Permanent operation -20 °C up to +50 °C Operation with heater version O30* -30 °C up to +50 °C Storage -30 °C up to +70 °C * The O30 version is only available for the AC version devices !
Heat disspation	approx. 40 % through front plate, approx. 60 % through back side
Relative humidity	10 up to 90 % at +40 °C, non condensing
Material front side	Aluminum front plate, glass, optional glass touch screen or polyester touch screen
Material back side	Galvanized sheet steel
Ingress protection	Front side IP66, back side IP65

We reserve the right to make any changes at any time according to technological progress or further development.

R. STAHL HMI Systems GmbH | Im Gewerbegebiet Pesch 14 | D 50767 Köln | www.stahl-hmi.de
Tel. +49 (221) 59808-200 | Fax: +49 (221) 59808-260 | Email: office@stahl-hmi.de