FIRST EDITION 2011.06.23
REVISED EDITION 2019.03.05

MANUAL DRESSER（New-ETD）

USER'S MANUAL

Please read this manual before using KYOKUTOH'S manual dresser (New-ETD)



KYOKUTOH CO., LTD

ATTENTION TO SAFETY

※ Please be sure to read ATTENTION TO SAFETY before using New-ETD

This manual dresser “New-ETD” is intended for reshaping deformed tip spot face due to resistance welding in manufacturing line. This product is not to be used in any manner other than that which is specified within. We will not be held responsible for damage or injury caused as a result of misuse of this product.

※After reading, pleasekeep the manual to the place where you can check anytime.

- Please ware light desses and do up a cuff and tie so that they won’t be sucked in rotating part.
- Please do not bring a dresser closer than other worker. Worker‘s legs may get stuck with hose or hit tools.
- For your safety, please use an eye shield, a hard hat, an earplug, an antidust mask, and safety shoes.
- Please do not apply electric current at dressing time.
- Please consider safe location for peripheral equipment when you work in manufacturing line.
- If you use alcohole, thinner and volatile lubricant for maintenance purpose, please remove it cleanly.
- Please do not use acidic or chlorine detergents for maintenance purposes.
- Do not operate a dresser near dangerous objects which catch fire, for instance gasoline, gas, paintand adhesive.



We will not be held responsible for damage or injury caused as a result of misuse of this product.

INDEX

1 Product description

1.1 Product Specification ・・・・・・・・・・・・・・・・・・・・・・・・ 1

1.2 Exterior dimension ・・・・・・・・・・・・・・・・・・・・・・・・・ 1

1.3 Features ・・・・・・・・・・・・・・・・・・・・・・・・・・・・・・ 1

2 Caution ・・・・・・・・・・・・・・・・・・・・・・・・・・・・・・・ 2

3 How to Use

3.1 Cutter and holder for simultaneous dressing upper and lower ・・・ 3

3.2 Pressureless （One side dressing）cutter and holder ・・・・・・・・ 4

4 How to Change the Cutter

4.1 Cutter and holder for simultaneous dressing upper and lower・・・・ 5

4.2 Pressureless （One side dressing）cutter and holder ・・・ ・・ 7

5 Procedure for the Selecting Cutter・・・・・・・・・・・・・・・・・・ 8

6 Abnormality and How to Repair ・・・・・・・・・・・・・・・・・・・・ 9

7 Consumption Parts List ・・・・・・・・・・・・・・・・・・・・ 11

8 Periodic Maintenance ・・・・・・・・・・・・・・・・・・・・・・ 12

9 Contacts ・・・・・・・・・・・・・・・・・・・・・・ 14

1. Product description

1. 1 Product Specification

Power	Air Pressure(0.5MPa~0.68MPa)
Minimum Hose Diameter	Φ8
Fitting Size	PT-1/4
Weight	2.3 KG

1. 2 Exterior Dimension

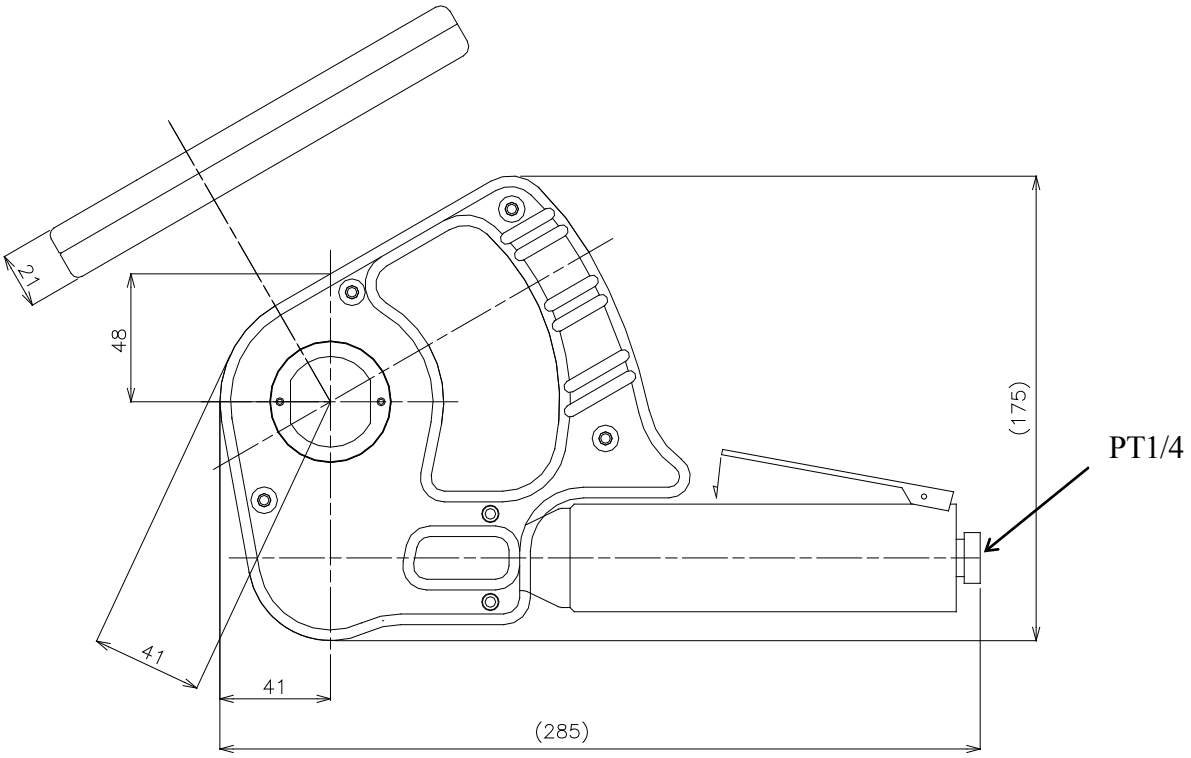

1. 3 Features

1. Selectable use of cutter and holder for simultaneous dressing upper and lower or pressureless(One side dressing).
2. Enable high dressing quality by newly designed cutter for New-ETD dresser.
   Dressing pressure for simultaneous upper and lower is 1470[N]~2450[N](150~220kgf).

2. Cautions

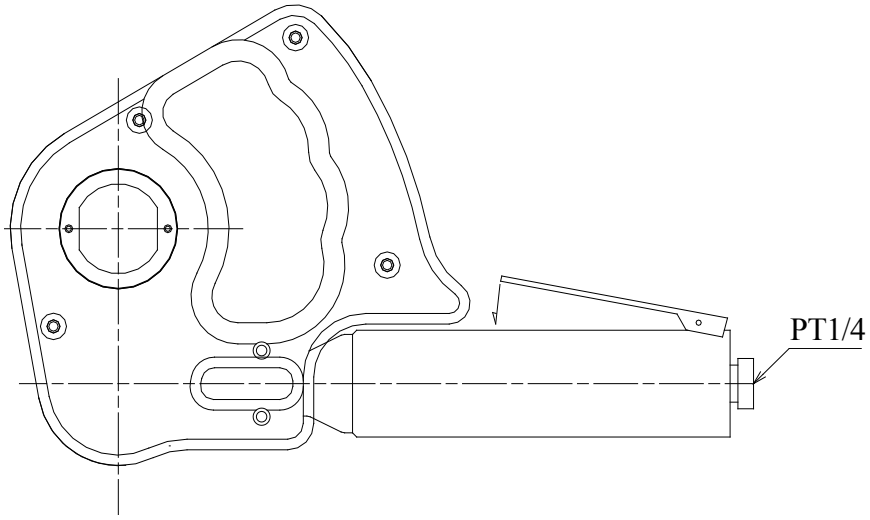

- Do not insert a finger or hand into the gear opening while in operarion.
- Absolutely never disassemble or reconfigure this machine or its parts.
- Please always stabilize a step and work with the right posture. Working with unstable postur is dengerous.
- Stop air supply for installation or de-installation of air pipe.
- Be sure to switch off the power supply, when changing parts or maintenance.
- Use air hose of enough thickness.（more φ8 inside diamater）
- Use this product with air pressure 0.5Mpa~0.68Mpa. It may cause a problem if higher air pressure will be used.

  If less, poor performance.
- Please supply clean and dry air for maintenance.

  Using air 3 items(Filter, Regulater and lubricator) is recommended.
- Refuel periodically, following "Periodical Maintenance"（P12）
- Before using, be sure that electrodes and cutter shapes are correct.
- Please make sure electric currency is disconnected during gun pressure.
- Be sure that the gun pressure is in the range of setting value.
- Please check cutter and holders are fixed in New-ETD properly.
- Do not through, drop,or give great shock to this machine. This could cause trouble and accident.
- Using the hand dresser without presssure for a prolonged time could cause the dressers abrasion or other damage.
- After completing the job, please disconnect air hose.

３． How to Use

３． １　Cutter and holder for simultaneous dressing upper and lower

Timing Chart

ＥＴＤ type cutter (Only clockwise rotation)

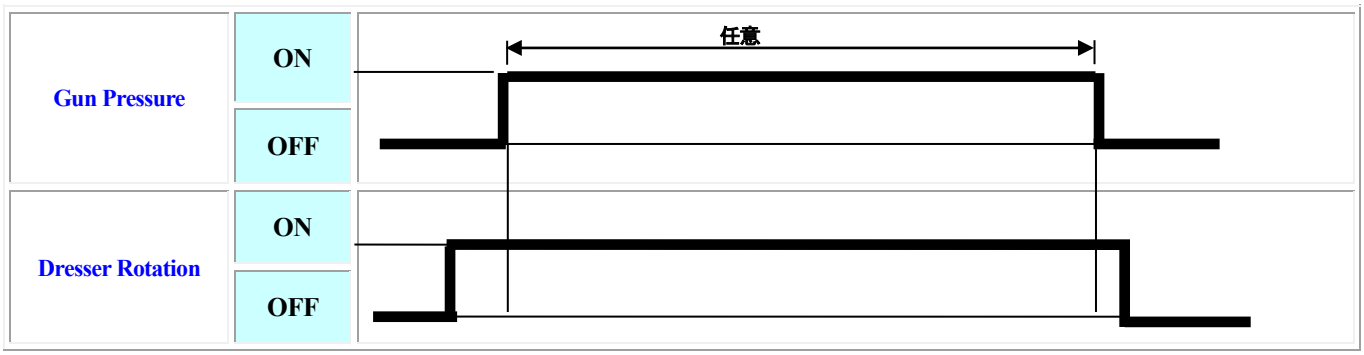

① Start motor to clockwise before Gun press.

② Please set pressure time(Dressing time) arbitrarily.

③ To finish dressing, release the gun pressure while dresser is removing.

◆ Before operating, make sure that the forms of the cutter and tips are fitting.
The hand dresser and tip face become vertical during pressure time.

◆ Set the press power 1470[N]~2450[N] (150kgf~220kgf)

◆ In order to remove chip from cap tip face after dressing, open a gun arm and press hand dresser upper and lower cap tips.

３．２　Pressureless　（One side dressing）cutter and holder

① Press hand dresser on cap tips.

② Rotate the hand dresser.

◆ Before starting above operation, make sure that the forms the cutter and tip are fitting.

◆ Please do not pressurize the hand dresser. The cutter and cutter case can be broken.

◆ Pressurize hand dresser vertically on cap tips.

4. How to Change Cutter

4. 1 Cutter and holder for simultaneous dressing upper and lower

1 Remove M3 screw from the cutter holder.

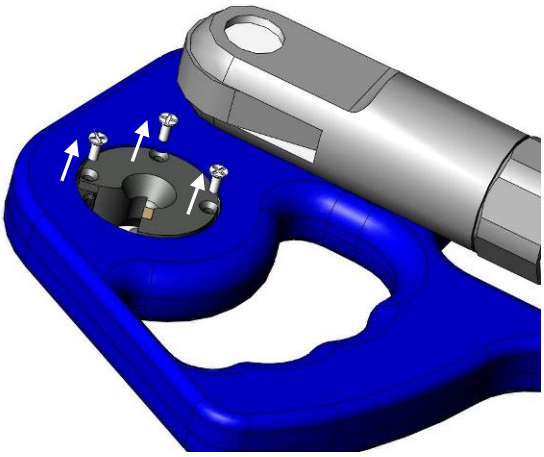

2 Remove the cutter holder from the dresser.

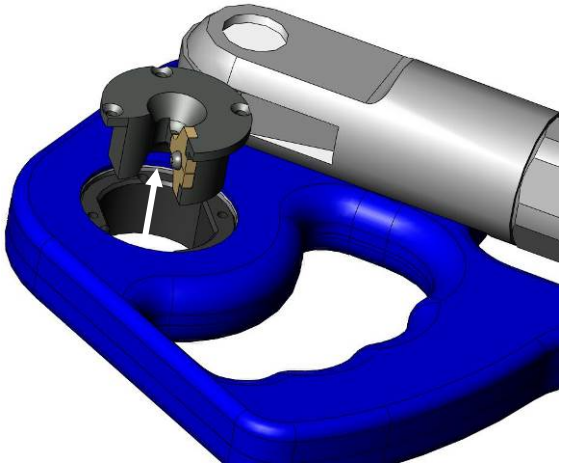

3 To remove the cutter from the cutter holder, loosen the M3 torque screw.
（With a torque wrench T-10）

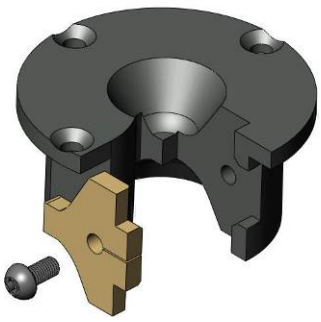

4 Replace a new cutter.

Confirm cutter is replaced in the proper direction.

Please install the angle narrows on the side where touches the holder.**（Inscription side）**

（Recommended torque for M3 screw is to 10~12Kgf・cm）

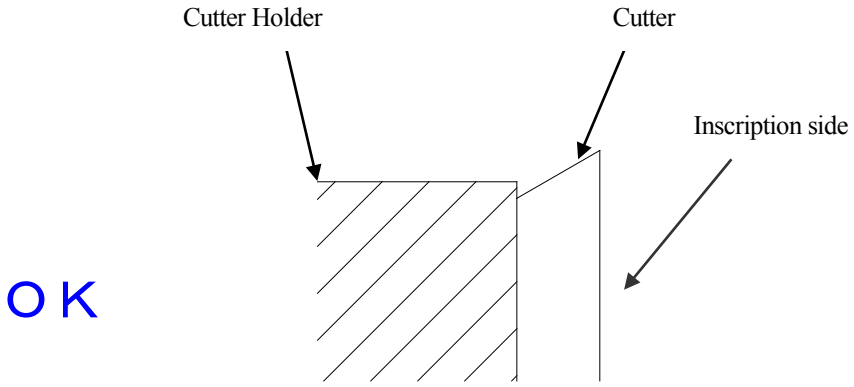

O K

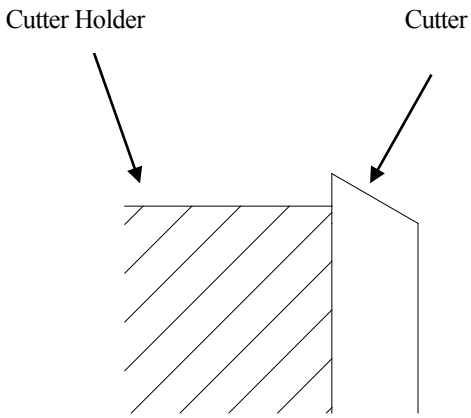

N G

5 To install the cutter holder to the dresser. Please do the reverse order from 1 to 2.

4．2　Pressureless　（One side dressing）cutter and holder

1　Remove M3 screw from the cutter holder.

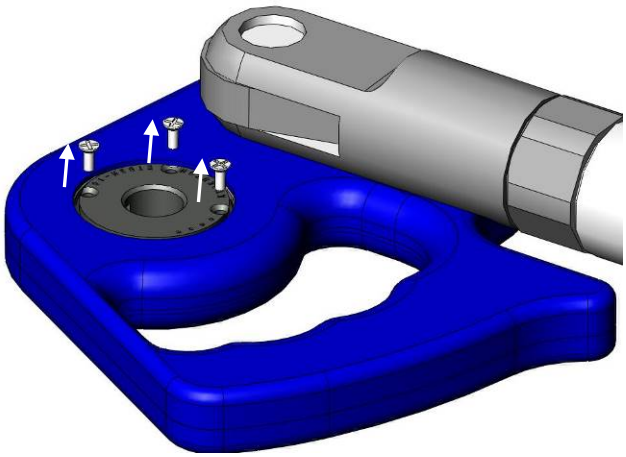

2　Remove the cutter case from the dresser.

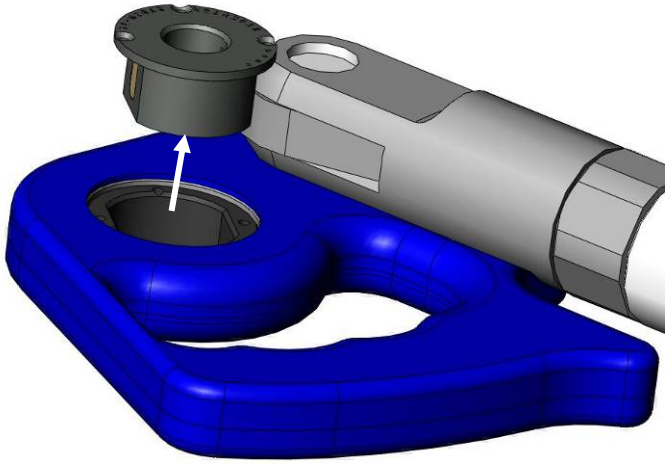

3　Remove the cutter case from the dresser.

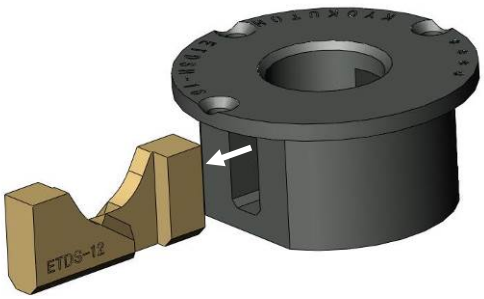

4　Do the reverse order from 1 to 3.

5. Procedure for the Selection Cutter

(Tip diameter is under φ16)

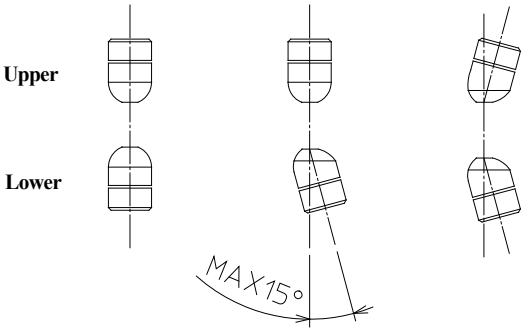

Cutter and holder for simultaneous dressing upper and lower			
Upper	Lower	Cutter	Holder
φ6×R8	φ6×R8	ETD−12	ETDH−12

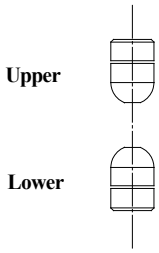

Pressureless (One side dressing) cutter and holder			
Upper	Lower	Cutter	Case
φ6×R8	φ6×R8	ETDS−12	ETDSH−16

Please inquire us for the other tip spot shape.

6. Abnormality and How to Repair

Abnormal Condiotion	Cause and Countermeasure
Dresser does not rotate.	* The regulation air pressure is not secured. → Check the air pressure. * The Gun pressure is higher than specified by our company. (Simultaneous dressing) → Set the pressure under2,450 N (220Kgf). * Motor is broken. → Need repair to replace the motor. * The shapes of the cutter and the cap tip are not fitting, and cling each other. → Check the cutter shape and replace it if necessary.
The motor is running, but the cutter does not rotate.	* Gear in the gear box is broken. → Need repair to replace the gear.
The diameter of the dress cap tip is different from the setting.	* Dressing time is too short. → Set the dressing time longer. * The cutting capability of the cutter has deteriorated or the cutter has been damaged. → Replace the cutter and check the gun pressure. * Dressing point is not proper. → Pressurize hand dresser vertically on cap tips for dressing. * The cutter is not suitable for the cap tip. → Check the cutter shape and replace it if necessary. * Gear in gear box is broken. → Need repair to replace the gear. * The screw which fastens the cutter to the holder os loosen. → Tight the screw.
Abnormal sound during dressing	* Dressing point is not proper. → Pressurize hand dresser vertically on cap tips for dressing. * The cutter has been damaged. → Replace the cutter and check the gun pressure.

Abnormal Condision	Case and Countermeasure
The cap tip face has barr after dressing.	* Wrong control approach → Open the gun arm while the dresser is operating and stop using the dresser.（For using simultaneous dressing） * The shaps of the cap tips and the cutter are not matched. → Check the cutter shape and replace it if necessary. * Cutter has been damaged. → Replace the cutter, or check the gun pressure. * The screw which fastens the cutter to the holder os loosen. → Tighten the screw.
The tip diatemer is not at the center or the desinated location.	* Dressing point is not proper. → Pressurize hand dresser vertically on cap tips for dressing。
Dressing does not complete in the set time.	* The cutting capability of the cutter has deteriorated or the cutter has been damaged. → Replace the cutter and check the gun pressure. * Holder has been consumed. → Replace the holder.

（Remarks）

◆ Please be sure the switch is off when you are checking or replacing parts or the cutter.

◆ When the dresser is out of order, please contact us immediately. Do not take the dresser apart.
It would not be able to repair if you disassemble it.

7. Consumption Parts List

<table>
<tr><td colspan="2">Cutter and holder for simultaneous dressing upper and lower</td></tr>
<tr><td>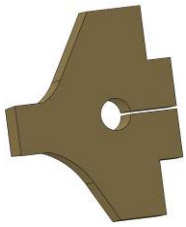</td><td>* Cutter
Part number: ETD-**
Replacement Qty: 1pc

* Replacing cycle(In case of a using the gun with 150kgf～200kgf pressurization)
10,000 times when 3 sec./1 dress</td></tr>
<tr><td>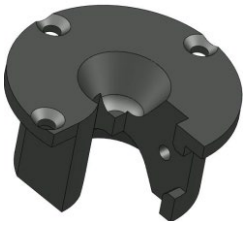</td><td>* Cutter Holder
Part number : ETDH-**
Replacement Qty: 1pc

* Replacing cycle(In case of a using the gun with 150kgf～200kgf pressurization)
30,000 times when 3 sec./1 dress</td></tr>
<tr><td colspan="2">Pressureless （One side dressing） cutter and holder</td></tr>
<tr><td>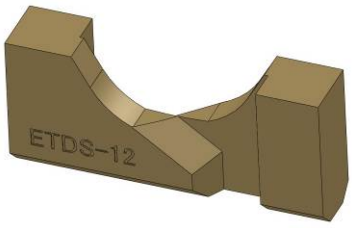
</td><td>* Cutter
Part number : ETDS-**
Replacement Qty: 1pc

* Replacing cycle(In case of a using the gun with 150kgf～200kgf pressurization)
10,000 times when 3 sec./1 dress</td></tr>
<tr><td></td><td>* Cutter Case
Part number : ETDSH-**
Replacement Qty : 1pc

* Replacing cycle(In case of a using the gun with 150kgf～200kgf pressurization)
30,000 times when 3 sec./1 dress</td></tr>
</table>

8. Periodic Maintenance

Maintenance place	How to maintenance
Supply oil to air motor	Every time before you use a manual hand dresser, please pour oil from air inlet (#60 spindle oil) 0.5cc and operate hand dresser without pressure for 3~5 sec to blends thoroughly.

MEMO

9. Contact



KYOKUTOH CO,. LTD
181-1, Nakayashiki, Orido-cho, Nisshin, Aichi 470-0115 Japan
TEL +81-561-72-8811 FAX +81-561-72-8821
E-Mail: sales@kyokutoh.com
http://www.kyokutoh.com
KANTO SALES OFFICE
TEL +81-49-277-4324 FAX +81-49-277-4325
HIROSHIMA SALES OFFICE
TEL +81-82-569-6227 FAX +81-82-569-6228



CHANGER & DRESSER CORPORATION
1527 ITC Way, Anniston, AL 36207 U.S.A
TEL +1-256-832-4392 FAX +1-256-832-4393
http://www.changer-dresser.com



KYOKUTOH CHINA
73 Huagang Street, Xiuquan Town, Huadu District,
GuangZhou City, GuangDong Province, China.
TEL +86-20-86980880 FAX +86-20-86980890
http://www.kyokutoh.com.cn



KYOKUTOH THAILAND
339/2 Soi Phattanakarn 69, Phattanakarn Road, Prawet,
Bangkok 10250 THAILAND
TEL +66-272-162-82 FAX +66-272-162-84
http://www.kyokutoh.co.th



KYOKUTOH KOREA
117, Tawon TAKRA II Industry Center, Dongsan-ro 76,
Danwon-gu, Ansan-si, Gyeonggi-do, Korea 15434
TEL +82-31-414-8730 FAX +82-31-414-8731



KYOKUTOH EUROPE
Radlkoferstr. 2 81373 Muenchen, Germany
TEL +49-89-7411-85313 FAX +49-89-7411-85315
http://www.kyokazutoh.de