HITACHI
Inspire the Next

SJ300 Series Inverter Instruction Manual

- Three-phase Input 200V Class
- Three-phase Input 400V Class

U.S. Version Models



European Version Models



Manual Number: NB613XJ
September 2006

After reading this manual, keep it handy for future reference.

Hitachi Industrial Equipment Systems Co., Ltd.

Safety Messages

For the best results with the SJ300 Series inverter, carefully read this manual and all of the warning labels attached to the inverter before installing and operating it, and follow the instructions exactly. Keep this manual handy for quick reference.

Definitions and Symbols

A safety instruction (message) includes a hazard alert symbol and a signal word, WARNING or CAUTION. Each signal word has the following meaning:



This symbol indicates HIGH VOLTAGE. It calls your attention to items or operations that could be dangerous to you and other persons operation this equipment. Read the message and follow the instructions carefully.



This symbol is the “Safety Alert Symbol.” It occurs with either of two signal words: CAUTION or WARNING, as described below.



WARNING: Indicates a potentially hazardous situation that, if not avoided, can result in serious injury or death.



CAUTION: Indicates a potentially hazardous situation that, if not avoided, can result in minor to moderate injury, or serious damage to the product. The situation described in the **CAUTION** may, if not avoided, lead to serious results. Important safety measures are described in CAUTION (as well as WARNING), so be sure to observe them.



STEP: A step is one of a series of action steps required to accomplish a goal. The number of the step will be contained in the step symbol.



NOTE: Notes indicate an area or subject of special merit, emphasizing either the product’s capabilities or common errors in operation or maintenance.



TIP: Tips give a special instruction that can save time or provide other benefits while installing or using the product. The tip calls attention to an idea that may not be obvious to first-time users of the product.

Hazardous High Voltage



HIGH VOLTAGE: Motor control equipment and electronic controllers are connected to hazardous line voltages. When servicing drives and electronic controllers, there may be exposed components with housings or protrusions at or above line potential. Extreme care should be taken to protect against shock.
Stand on an insulating pad and make it a habit to use only one hand when checking components. Always work with another person in case an emergency occurs. Disconnect power before checking controllers or performing maintenance. Be sure equipment is properly grounded. Wear safety glasses whenever working on electronic controllers or rotating machinery.

General Precautions - Read These First!



WARNING: This equipment should be installed, adjusted, and serviced by qualified electrical maintenance personnel familiar with the construction and operation of the equipment and the hazards involved. Failure to observe this precaution could result in bodily injury.



WARNING: The user is responsible for ensuring that all driven machinery, drive train mechanism not supplied by Hitachi Industrial Equipment Systems Co., Ltd., and process line material are capable of safe operation at an applied frequency of 150% of the maximum selected frequency range to the AC motor. Failure to do so can result in destruction of equipment and injury to personnel should a single-point failure occur.



WARNING: For equipment protection, install a ground leakage type breaker with a fast response circuit capable of handling large currents. The ground fault protection circuit is not designed to protect against personal injury.



HIGH VOLTAGE: HAZARD OF ELECTRICAL SHOCK. DISCONNECT INCOMING POWER BEFORE WORKING ON THIS CONTROL.



WARNING: Wait at least five (5) minutes after turning OFF the input power supply before performing maintenance or an inspection. Otherwise, there is the danger of electric shock.



CAUTION: These instructions should be read and clearly understood before working on SJ300 series equipment.



CAUTION: Proper grounds, disconnecting devices and other safety devices and their location are the responsibility of the user and are not provided by Hitachi Industrial Equipment Systems Co., Ltd.



CAUTION: Be sure to connect a motor thermal disconnect switch or overload device to the SJ300 series controller to assure that the inverter will shut down in the event of an overload or an overheated motor.



HIGH VOLTAGE: Dangerous voltage exists until power light is OFF. Wait at least 5 minutes after input power is disconnected before performing maintenance.



CAUTION: This equipment has high leakage current and must be permanently (fixed) hard-wired to earth ground via two independent cables.



WARNING: Rotating shafts and above-ground electrical potentials can be hazardous. Therefore, it is strongly recommended that all electrical work conform to the National Electrical Codes and local regulations. Installation, alignment and maintenance should be performed only by qualified personnel.
Factory-recommended test procedures included in the instruction manual should be followed. Always disconnect electrical power before working on the unit.

CAUTION:
a) Motor must be connected to protective ground via low resistive path (< 0.1Ω)
b) Any motor used must be of a suitable rating.
c) Motors may have hazardous moving parts. In this event suitable protection must be provided.

CAUTION: Alarm connection may contain hazardous live voltage even when inverter is disconnected. When removing the front cover for maintenance or inspection, confirm that incoming power for alarm connection is completely disconnected.

CAUTION: Hazardous (main) terminals for any interconnection (motor, contact breaker, filter, etc.) must be inaccessible in the final installation.

CAUTION: The end application must be in accordance with BS EN60204-1. Refer to the section "Step-by-Step Basic Installation" on page 2–6. The diagram dimensions are to be suitably amended for your application.

CAUTION: Connection to field wiring terminals must be reliably fixed having two independent means of mechanical support. Using a termination with cable support (figure below), or strain relief, cable clamp, etc.

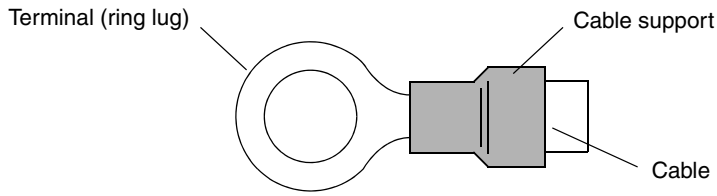

CAUTION: A three-pole disconnection device must be fitted to the incoming main power supply close to the inverter. Additionally, a protection device meeting IEC947-1/IEC947-3 must be fitted at this point (protection device data shown in "Determining Wire and Fuse Sizes" on page 2–14).

NOTE: The above instructions, together with any other requirements are highlighted in this manual, and must be followed for continued LVD (European Low Voltage Directive) compliance.

Index to Warnings and Cautions in This Manual

Installation—Cautions for Mounting Procedures


CAUTION: Be sure to install the unit on flame-resistant material such as a steel plate. Otherwise, there is the danger of fire. 2–6


CAUTION: Be sure not to place any flammable materials near the inverter. Otherwise, there is the danger of fire. 2–6


CAUTION: Be sure not to let the foreign matter enter vent openings in the inverter housing, such as wire clippings, spatter from welding, metal shavings, dust, etc. Otherwise, there is the danger of fire. 2–6


CAUTION: Be sure to install the inverter in a place that can bear the weight according to the specifications in the text (Chapter 1, Specifications Tables). Otherwise, it may fall and cause injury to personnel. 2–6


CAUTION: Be sure to install the unit on a perpendicular wall that is not subject to vibration. Otherwise, it may fall and cause injury to personnel. 2–6


CAUTION: Be sure not to install or operate an inverter that is damaged or has missing parts. Otherwise, it may cause injury to personnel. 2–6


CAUTION: Be sure to install the inverter in a well-ventilated room that does not have direct exposure to sunlight, a tendency for high temperature, high humidity or dew condensation, high levels of dust, corrosive gas, explosive gas, inflammable gas, grinding-fluid mist, salt air, etc. Otherwise, there is the danger of fire. 2–6


CAUTION: Be sure to maintain the specified clearance area around the inverter and to provide adequate ventilation. Otherwise, the inverter may overheat and cause equipment damage or fire. 2–7

Wiring—Warnings for Electrical Practices and Wire Specifications


WARNING: “Use 60/75°C Cu wire only” or equivalent. 2–13


WARNING: “Open Type Equipment.” For models SJ300–750H to SJ300–1500H. 2–13


WARNING: “A Class 2 circuit wired with Class 1 wire” or equivalent. 2–13


WARNING: “Suitable for use on a circuit capable of delivering not more than 100,000 rms symmetrical amperes, 240 V maximum.” For models with suffix L. 2–13


WARNING: “Suitable for use on a circuit capable of delivering not more than 100,000 rms symmetrical amperes, 480 V maximum.” For models with suffix H. 2–13

HIGH VOLTAGE: Be sure to ground the unit. Otherwise, there is a danger of electric shock and/or fire. 2–13

HIGH VOLTAGE: Wiring work shall be carried out only by qualified personnel. Otherwise, there is a danger of electric shock and/or fire. 2–13

HIGH VOLTAGE: Implement wiring after checking that the power supply is OFF. Otherwise, you may incur electric shock and/or fire. 2–13

HIGH VOLTAGE: Do not connect wiring to an inverter or operate an inverter that is not mounted according the instructions given in this manual. Otherwise, there is a danger of electric shock and/or injury to personnel. 2–13

Wiring—Cautions for Electrical Practices

CAUTION: Be sure that the input voltage matches the inverter specifications: • Three phase 200 to 240V 50/60Hz • Three phase 380 to 480V 50/60Hz 2–19

CAUTION: Be sure not to power a three-phase-only inverter with single phase power. Otherwise, there is the possibility of damage to the inverter and the danger of fire. 2–19

CAUTION: Be sure not to connect an AC power supply to the output terminals. Otherwise, there is the possibility of damage to the inverter and the danger of injury and/or fire. 2–19

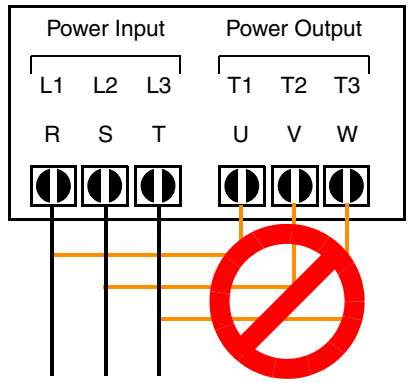

NOTE:

L1, L2, L3: Three-phase 200 to 240V 50/60 Hz
Three-phase 380 to 480V 50/60 Hz



CAUTION: Fasten the screws with the specified fastening torque in the table below. Check for any loosening of screws. Otherwise, there is the danger of fire. 2–16



CAUTION: Remarks for using ground fault interrupter breakers in the main power supply: Adjustable frequency inverters with CE-filters (RFI-filter) and shielded (screened) motor cables have a higher leakage current toward Earth GND. Especially at the moment of switching ON this can cause an inadvertent trip of ground fault interrupter breakers. Because of the rectifier on the input side of the inverter there is the possibility to stall the switch-off function through small amounts of DC current. Please observe the following: • Use only short time-invariant and pulse current-sensitive ground fault interrupter breakers with higher trigger current. • Other components should be secured with separate ground fault interrupter breakers. • Ground fault interrupter breakers in the power input wiring of an inverter are not an absolute protection against electric shock. 2–19



CAUTION: Be sure to install a fuse in each phase of the main power supply to the inverter. Otherwise, there is the danger of fire. 2–19



CAUTION: For motor leads, ground fault interrupter breakers and electromagnetic contactors, be sure to size these components properly (each must have the capacity for rated current and voltage). Otherwise, there is the danger of fire. 2–19



CAUTION: Failure to remove all vent opening covers before electrical operation may result in damage to the inverter. 2–20

Powerup Test Caution Messages



CAUTION: The heat sink fins will have a high temperature. Be careful not to touch them. Otherwise, there is the danger of getting burned. 2–21



CAUTION: The operation of the inverter can be easily changed from low speed to high speed. Be sure to check the capability and limitations of the motor and machine before operating the inverter. Otherwise, there is the danger of injury. 2–21



CAUTION: If you operate a motor at a frequency higher than the inverter standard default setting (50Hz/60Hz), be sure to check the motor and machine specifications with the respective manufacturer. Only operate the motor at elevated frequencies after getting their approval. Otherwise, there is the danger of equipment damage and/or injury to personnel. 2–22



CAUTION: Check the following before and during the powerup test. Otherwise, there is the danger of equipment damage. • Is the shorting bar between the [P] and [PD] terminals installed? DO NOT power or operate the inverter if the jumper is removed. • Is the direction of the motor rotation correct? • Did the inverter trip during acceleration or deceleration? • Were the rpm and frequency meter readings as expected? • Were there any abnormal motor vibrations or noise? 2–22

Warnings for Operations and Monitoring


WARNING: Be sure to turn ON the input power supply only after closing the front case. While the inverter is energized, be sure not to open the front case. Otherwise, there is the danger of electric shock. 4–3


WARNING: Be sure not to operate electrical equipment with wet hands. Otherwise, there is the danger of electric shock. 4–3


WARNING: While the inverter is energized, be sure not to touch the inverter terminals even when the motor is stopped. Otherwise, there is the danger of electric shock. 4–3


WARNING: If the Retry Mode is selected, the motor may suddenly restart after a trip stop. Be sure to stop the inverter before approaching the machine (be sure to design the machine so that safety for personnel is secure even if it restarts.) Otherwise, it may cause injury to personnel. 4–3


WARNING: If the power supply is cut OFF for a short period of time, the inverter may restart operation after the power supply recovers if the Run command is active. If a restart may pose danger to personnel, so be sure to use a lock-out circuit so that it will not restart after power recovery. Otherwise, it may cause injury to personnel. 4–3


WARNING: The Stop Key is effective only when the Stop function is enabled. Be sure to enable the Stop Key separately from the emergency stop. Otherwise, it may cause injury to personnel. 4–3


WARNING: During a trip event, if the alarm reset is applied and the Run command is present, the inverter will automatically restart. Be sure to apply the alarm reset only after verifying the Run command is OFF. Otherwise, it may cause injury to personnel. 4–3


WARNING: Be sure not to touch the inside of the energized inverter or to put any conductive object into it. Otherwise, there is a danger of electric shock and/or fire. 4–3


WARNING: If power is turned ON when the Run command is already active, the motor will automatically start and injury may result. Before turning ON the power, confirm that the RUN command is not present. 4–3


WARNING: When the Stop key function is disabled, pressing the Stop key does not stop the inverter, nor will it reset a trip alarm. 4–3


WARNING: Be sure to provide a separate, hard-wired emergency stop switch when the application warrants it. 4–3


WARNING: If the power is turned ON and the Run command is already active, the motor starts rotation and is dangerous! Before turning power ON, confirm that the external Run command is not active. 4–12


WARNING: After the Reset command is given and the alarm reset occurs, the motor will restart suddenly if the Run command is already active. Be sure to set the alarm reset after verifying that the Run command is OFF to prevent injury to personnel. 4–27


WARNING: You may need to disconnect the load from the motor before performing auto-tuning. The inverter runs the motor forward and backward for several seconds without regard to load movement limits. 4–67

Cautions for Operations and Monitoring


CAUTION: The heat sink fins will have a high temperature. Be careful not to touch them. Otherwise, there is the danger of getting burned. 4–2


CAUTION: The operation of the inverter can be easily changed from low speed to high speed. Be sure check the capability and limitations of the motor and machine before operating the inverter. Otherwise, it may cause injury to personnel. 4–2


CAUTION: If you operate a motor at a frequency higher than the inverter standard default setting (50Hz/60Hz), be sure to check the motor and machine specifications with the respective manufacturer. Only operate the motor at elevated frequencies after getting their approval. Otherwise, there is the danger of equipment damage. 4–2


CAUTION: It is possible to damage the inverter or other devices if your application exceeds the maximum current or voltage characteristics of a connection point. 4–7


CAUTION: Be careful not to turn PID Clear ON and reset the integrator sum when the inverter is in Run Mode (output to motor is ON). Otherwise, this could cause the motor to decelerate rapidly, resulting in a trip. 4–30


CAUTION: When the motor runs at lower speeds, the cooling effect of the motor's internal fan decreases. 4–55


CAUTION: If the inverter capacity is more than twice the capacity of the motor in use, the inverter may not achieve its full performance specifications. 4–70

Warnings and Cautions for Troubleshooting and Maintenance


WARNING: Wait at least five (5) minutes after turning OFF the input power supply before performing maintenance or an inspection. Otherwise, there is the danger of electric shock. 6–2


WARNING: Make sure that only qualified personnel will perform maintenance, inspection, and part replacement. Before starting to work, remove any metallic objects from your person (wristwatch, bracelet, etc.). Be sure to use tools with insulated handles. Otherwise, there is a danger of electric shock and/or injury to personnel. 6–2


WARNING: Never remove connectors by pulling on its wire leads (wires for cooling fan and logic P.C. board). Otherwise, there is danger of fire due to wire breakage and/or injury to personnel. 6–2


CAUTION: Do not connect the megger to any control circuit terminals such as intelligent I/O, analog terminals, etc. Doing so could cause damage to the inverter. 6–11


CAUTION: Never test the withstand voltage (HIPOT) on the inverter. The inverter has a surge protector between the main circuit terminals above and the chassis ground. 6–11

WARNING: The screws that retain the capacitor bank assembly are part of the electrical circuit of the high-voltage internal DC bus. Be sure that all power has been disconnected from the inverter, and that you have waited at least 5 minutes before accessing the terminals or screws. Be sure the charge lamp is extinguished. Otherwise, there is the danger of electrocution to personnel. 6–13

CAUTION: Do not operate the inverter unless you have replaced the two screws that connect the capacitor bank assembly to the internal DC bus. Otherwise, damage to the inverter may occur. 6–13

CAUTION: Remove the fan assembly carefully, since it is attached to the unit via connecting wires. 6–14

HIGH VOLTAGE: Be careful not to touch wiring or connector terminals when working with the inverters and taking measurements. Be sure to place the measurement circuitry above in an insulated housing before using them. 6–16

General Warnings and Cautions

WARNING: Never modify the unit. Otherwise, there is a danger of electric shock and/or injury.

CAUTION: Withstand voltage tests and insulation resistance tests (HIPOT) are executed before the units are shipped, so there is no need to conduct these tests before operation.

CAUTION: Do not attach or remove wiring or connectors when power is applied. Also, do not check signals during operation.

CAUTION: Do not stop operation by switching OFF electromagnetic contactors on the primary or secondary sides of the inverter.

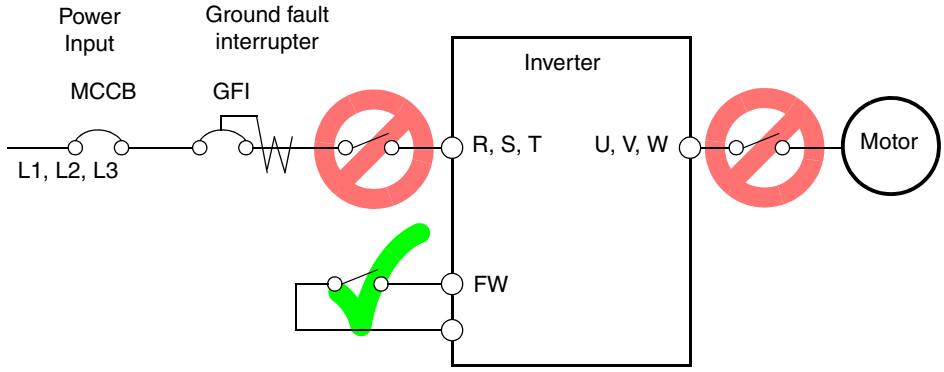

When there has been a sudden power failure while a Run command is active, then the unit may restart operation automatically after the power failure has ended. If there is a possibility that such an occurrence may harm humans, then install an electromagnetic contactor on the power supply side, so that the circuit does not allow automatic restarting after the power supply recovers. If an optional remote operator is used and the retry function has been selected, this will also allow automatic restarting when a Run command is active. So, please be careful.

CAUTION: Do not insert leading power factor capacitors or surge absorbers between the output terminals of the inverter and motor.

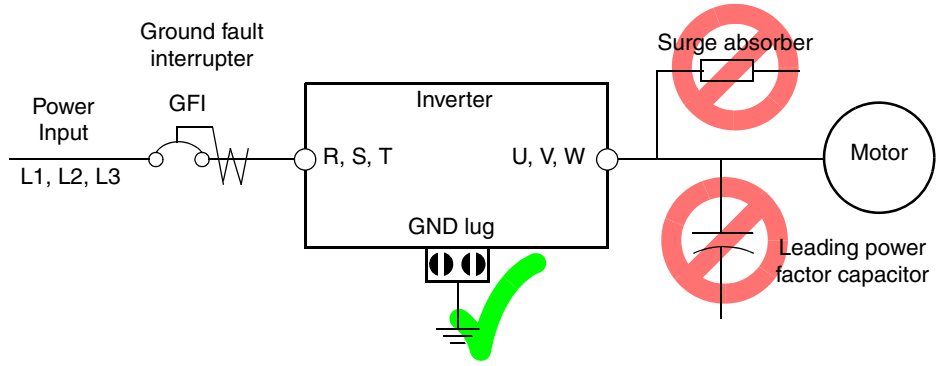

CAUTION: Be sure to connect the grounding terminal to earth ground.

CAUTION: When inspecting the unit, be sure to wait five minutes after tuning OFF the power supply before opening the cover.

CAUTION: SUPPRESSION FOR NOISE INTERFERENCE FROM INVERTER

The inverter uses many semiconductor switching elements such as transistors and IGBTs. Thus, a radio receiver or measuring instrument located near the inverter is susceptible to noise interference.

To protect the instruments from erroneous operation due to noise interference, they should be used well away from the inverter. It is also effective to shield the whole inverter structure.

The addition of an EMI filter on the input side of the inverter also reduces the effect of noise from the commercial power line on external devices.

Note that the external dispersion of noise from the power line can be minimized by connecting an EMI filter on the primary side of inverter.

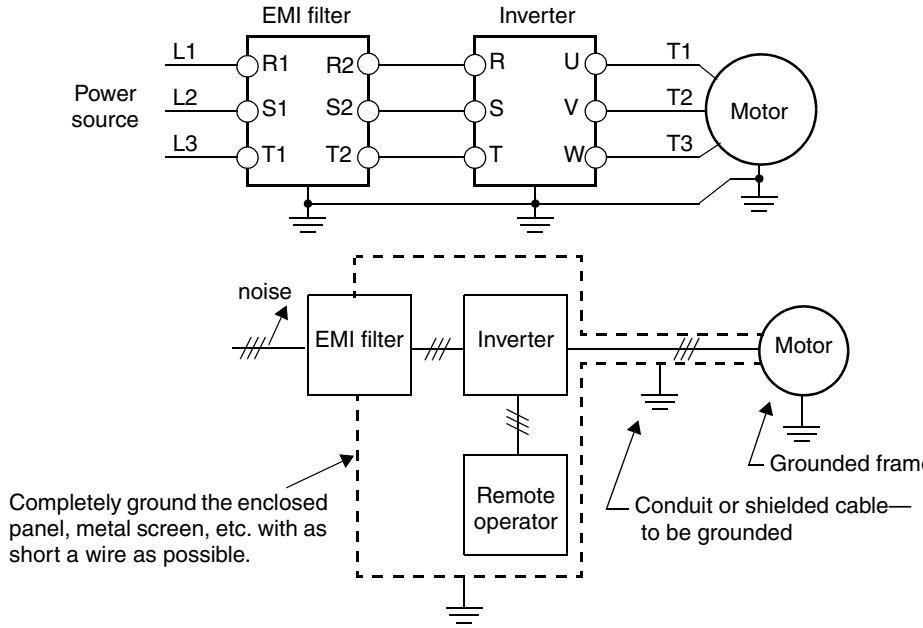

CAUTION: MOTOR TERMINAL VOLTAGE SURGE SUPPRESSION FILTER (For 400 V CLASS Inverters)
In a system using an inverter with the voltage control PWM system, a voltage surge caused by the cable constants such as the cable length (especially when the distance between the motor and inverter is 10 m or more) and cabling method may occur at the motor terminals. A dedicated filter of the 400 V class for suppressing this voltage surge is available. Be sure to install a filter in this situation. (See "LCR filter" on page 5–2, part type HRL–xxxC.)

CAUTION: EFFECTS OF POWER DISTRIBUTION SYSTEMS ON INVERTERS
In the cases below involving a general-purpose inverter, a large peak current can flow on the power supply side, sometimes destroying the converter module:
1. The unbalance factor of the power supply is 3% or higher.
2. The power supply capacity is at least 10 times greater than the inverter capacity (or the power supply capacity is 500 kVA or more).
3. Abrupt power supply changes are expected, due to conditions such as:
   a. Several inverters are interconnected with a short bus.
   b. A thyristor converter and an inverter are interconnected with a short bus.
   c. An installed phase advance capacitor opens and closes.

Where these conditions exist or when the connected equipment must be highly reliable, you MUST install an input-side AC reactor of 3% (at a voltage drop at rated current) with respect to the supply voltage on the power supply side. Also, where the effects of an indirect lightning strike are possible, install a lightning conductor.

CAUTION: Do not install inverters in a corner-grounded Delta distribution system. The resulting line imbalance will cause premature line fuse failure and failure of the inverter input bridge rectifier. Install in a balanced Delta or Wye distribution system only.

CAUTION: When the EEPROM error E8 occurs, be sure to confirm the setting values again.

CAUTION: When using *normally closed* active state settings (C011 to C019) for externally commanded Forward or Reverse terminals [FW] or [RV], the inverter may start automatically *when the external system is powered OFF or disconnected from the inverter!* So, do not use normally closed active state settings for Forward or Reverse terminals [FW] or [RV] unless your system design protects against unintended motor operation.

CAUTION: Do do not discard the inverter with household waste. Contact an industrial waste management company in your area who can treat industrial waste without polluting the environment.



General Caution

CAUTION: In all the illustrations in this manual, covers and safety devices are occasionally removed to describe the details. While operating the product, make sure that the covers and safety devices are placed as they were specified originally and operate it according to the instruction manual.

UL® Cautions, Warnings, and Instructions

Wiring Warnings for Electrical Practices and Wire Sizes

The Cautions, Warnings, and instructions in this section summarize the procedures necessary to ensure an inverter installation complies with Underwriters Laboratories® guidelines.

WARNING: "Use 60/75°C Cu wire only" or equivalent.

WARNING: "Open Type Equipment." For models SJ300–750H to SJ300–1500H.

WARNING: "Suitable for use on a circuit capable of delivering not more than 100,000 rms symmetrical amperes, 240 V maximum." For models with suffix L.

WARNING: "Suitable for use on a circuit capable of delivering not more than 100,000 rms symmetrical amperes, 480 V maximum." For models with suffix H.

Terminal Tightening Torque and Wire Size

The wire size range and tightening torque for field wiring terminals are presented in the table below.

Input Voltage	Motor Output		200V Inverter Model	Wire Size Range (AWG)	Torque	
	HP	kW			ft-lbs	(N-m)
200V	1/2	0.4	SJ300-004LFU	20	1.1	1.5
	1	0.75	SJ300-007LFU	18	1.1	1.5
	2	1.5	SJ300-015LFU	14	1.1	1.5
	3	2.2	SJ300-022LFU	14	1.1	1.5
	5	3.7	SJ300-037LFU	10	1.1	1.5
	7.5	5.5	SJ300-055LFU	8	1.8	2.5
	10	7.5	SJ300-075LFU	6	1.8	2.5
	15	11	SJ300-110LFU	4	3.6	4.9
	20	15	SJ300-150LFU	2	3.6	4.9
	25	18.5	SJ300-185LFU	1	3.6	4.9
	30	22	SJ300-220LFU	1/0 AWG	6.5	8.8
	40	30	SJ300-300LFU	1/0 ‖ 1/0 AWG	6.5	8.8
	50	37	SJ300-370LFU	1/0 ‖ 1/0 AWG	6.5	8.8
	60	45	SJ300-450LFU	1/0 ‖ 1/0 AWG	10.1	13.7
	75	55	SJ300-550LFU	2/0 ‖ 2/0 AWG	10.1	13.7

Input Voltage	Motor Output		400V Inverter Model	Wire Size Range (AWG)	Torque	
	HP	kW			ft-lbs	(N-m)
400V	1	0.75	SJ300-007HFU/E	20	1.1	1.5
	2	1.5	SJ300-015HFU/E	18	1.1	1.5
	3	2.2	SJ300-022HFU/E	16	1.1	1.5
	5	4.0	SJ300-040HFU/E	14	1.1	1.5
	7.5	5.5	SJ300-055HFU/E	12	1.8	2.5
	10	7.5	SJ300-075HFU/E	10	1.8	2.5
	15	11	SJ300-110HFU/E	8	3.6	4.9
	20	15	SJ300-150HFU/E	6	3.6	4.9
	25	18.5	SJ300-185HFU/E	6	3.6	4.9
	30	22	SJ300-220HFU/E	4	3.6	4.9
	40	30	SJ300-300HFU/E	3	3.6	4.9
	50	37	SJ300-370HFU/E	1	3.6	4.9
	60	45	SJ300-450HFU/E	1 AWG (75°C)	6.5	8.8
	75	55	SJ300-550HFU/E	1/0 ǁ 1/0 AWG	6.5	8.8
	100	75	SJ300-750HFU/E	3/0 (1/0 ǁ 1/0 AWG)	6.5	8.8
	125	90	SJ300-900HFU/E	3/0 (1/0 ǁ 1/0 AWG)	10.1	13.7
	150	110	SJ300-110HFU/E	1/0 ǁ 1/0 AWG	10.1	13.7
	175	132	SJ300-1320HFE	3/0 ǁ 3/0	10.1	13.7
	200	150	SJ300-1500HFU	3/0 ǁ 3/0	10.1	13.7

Fuse and Circuit Breaker Sizes

The inverter's input power wiring must include UL Listed, dual-element, 600V fuses, or UL Listed, inverse-time, 600V circuit breakers.

Input Voltage	Motor Output		200V Inverter Model	Ampere Rating for Fuse or Breaker	Input Voltage	Motor Output		400V Inverter Model	Ampere Rating for Fuse or Breaker
	HP	kW				HP	kW		
200V	1/2	0.4	SJ300-004LFU	10	400V	1	0.75	SJ300-007HFU/E	10
	1	0.75	SJ300-007LFU	10		2	1.5	SJ300-015HFU/E	10
	2	1.5	SJ300-015LFU	10		3	2.2	SJ300-022HFU/E	10
	3	2.2	SJ300-022LFU	15		5	4.0	SJ300-040HFU/E	15
	5	3.7	SJ300-037LFU	20		7.5	5.5	SJ300-055HFU/E	15
	7.5	5.5	SJ300-055LFU	30		10	7.5	SJ300-075HFU/E	20
	10	7.5	SJ300-075LFU	40		15	11	SJ300-110HFU/E	30
	15	11	SJ300-110LFU	60		20	15	SJ300-150HFU/E	40
	20	15	SJ300-150LFU	80		25	18.5	SJ300-185HFU/E	50
	25	18.5	SJ300-185LFU	100		30	22	SJ300-220HFU/E	60
	30	22	SJ300-220LFU	125		40	30	SJ300-300HFU/E	70
	40	30	SJ300-300LFU	150		50	37	SJ300-370HFU/E	90
	50	37	SJ300-370LFU	175		60	45	SJ300-450HFU/E	125
	60	45	SJ300-450LFU	225		75	55	SJ300-550HFU/E	125
	75	55	SJ300-550LFU	250		100	75	SJ300-750HFU/E	175
						125	90	SJ300-900HFU/E	200
						150	110	SJ300-110HFU/E	250
						175	132	SJ300-1320HFE	300
						200	150	SJ300-1500HFU	300

Wire Connectors

WARNING: Field wiring connections must be made by a UL Listed and CSA Certified ring lug terminal connector sized for the wire gauge being used. The connector must be fixed using the crimping tool specified by the connector manufacturer.

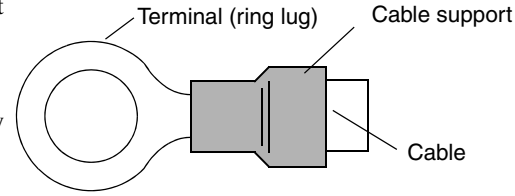

Motor Overload Protection

Hitachi SJ300 inverters provide solid state motor overload protection, which depends on the proper setting of the following parameters:

- B012 "electronic overload protection"
- B212 "electronic overload protection, 2nd motor"
- B312 "electronic overload protection, 3rd motor"

Set the rated current [Amperes] of the motor(s) with the above parameters. The setting range is 0.2 * rated current to 1.2 * rated current.

WARNING: When two or more motors are connected to the inverter, they cannot be protected by the electronic overload protection. Install an external thermal relay on each motor.

Table of Contents

Safety Messages

Hazardous High Voltage i
General Precautions - Read These First! ii
Index to Warnings and Cautions in This Manual iv
General Warnings and Cautions ix
UL® Cautions, Warnings, and Instructions xii

Table of Contents

Revisions xvii
Contact Information xviii

Chapter 1: Getting Started

Introduction 1–2
SJ300 Inverter Specifications 1–6
Introduction to Variable-Frequency Drives 1–13
Frequently Asked Questions 1–17

Chapter 2: Inverter Mounting and Installation

Orientation to Inverter Features 2–2
Basic System Description 2–5
Step-by-Step Basic Installation 2–6
Powerup Test 2–21
Using the Front Panel Keypad 2–23

Chapter 3: Configuring Drive Parameters

Choosing a Programming Device 3–2
Using Keypad Devices 3–3
“D” Group: Monitoring Functions 3–6
“F” Group: Main Profile Parameters 3–8
“A” Group: Standard Functions 3–9
“B” Group: Fine-Tuning Functions 3–29
“C” Group: Intelligent Terminal Functions 3–47
“H” Group: Motor Constants Functions 3–62
“P” Group: Expansion Card Functions 3–65
“U” Group: User-selectable Menu Functions 3–67
Programming Error Codes 3–68

Chapter 4: Operations and Monitoring

Introduction 4–2
Optional Controlled Decel and Alarm at Power Loss 4–4
Connecting to PLCs and Other Devices 4–7
Using Intelligent Input Terminals 4–11
Using Intelligent Output Terminals 4–42
Analog Input Operation 4–59
Analog Output Operation 4–62
Setting Motor Constants for Vector Control 4–65
PID Loop Operation 4–71
Configuring the Inverter for Multiple Motors 4–72

Chapter 5: Inverter System Accessories

Introduction 5–2
Component Descriptions 5–3
Dynamic Braking 5–6

Chapter 6: Troubleshooting and Maintenance

Troubleshooting 6–2
Monitoring Trip Events, History, & Conditions 6–5
Restoring Factory Default Settings 6–9
Maintenance and Inspection 6–10
Warranty 6–18

Appendix A: Glossary and Bibliography

Glossary A–2
Bibliography A–6

Appendix B: Serial Communications

Introduction B–2
Communications Protocol B–5
Communications Reference Information B–17

Appendix C: Drive Parameter Settings Tables

Introduction C–2
Parameter Settings for Keypad Entry C–2

Appendix D: CE–EMC Installation Guidelines

CE–EMC Installation Guidelines D–2
Hitachi EMC Recommendations D–4

Index

Revisions

Revision History Table

No.	Revision Comments	Date of Issue	Operation Manual No.
	Initial release of manual NB613X	March 2001	NB613X
1	Add three higher-horsepower models: Model # convention update, page 1–5 Specs table, pages 1–6 to 1–10 Derating curves, pages 1–11 to 1–12 Dimension drawings, page 2–12 Update wire and fuse size table, pages 2–14, 2–15 Update terminal dimensions table, pages 2–16, 2–17 Update braking tables, pages 5–8, 5–12 Add function P044 to P049, page 3–66, pages C–15, C–16 Add programming error codes, pages 3–67, 3–68 Update keypad navigation map, pages 2–25, 3–4 Add Appendix D: CE-EMC Installation Guidelines Moved Hitachi EMC Recommendations from page iv to D–4 Contents, Revisions, Index updates Front cover update	August 2001	NB613XA
2	Added default terminal symbols to tables on 3–47, 3–53 Updated intelligent I/O wiring examples throughout Chapter 4 to use default terminals or otherwise least-used terminals Corrected alarm relay symbols in multiple pages in Chapter 4 Contents, Revisions, Index updates Front cover update	December 2001	NB613XB
3	Updated company name on cover, contact page, nameplate photo Corrected graphs on pages 3–29 and 3–43 Made a few minor edits throughout	May 2002	NB613XC
4	Corrected [FM] common terminal to [L] in Chapter 4 Analog Input section Updated wire and fuse sizes for larger horsepower models in Safety section tables and Chapter 2 tables Enhanced Chapter 5 text and diagrams for dynamic braking Contents, Revisions, Index, Cover updates	August 2002	NB613XD
5	Minor miscellaneous edits Revisions, Cover updates	March 2003	NB613XE
6	Minor miscellaneous edits Revisions, Cover updates	March 2003	NB613XF
7	Minor miscellaneous edits Revisions, Cover updates	July 2003	NB613XG
8	Minor miscellaneous edits Revisions, Cover updates	December 2003	NB613XH
9	Minor miscellaneous edits Revisions, Cover updates	February 2006	NB613XI
10	Minor miscellaneous edits Revisions, Cover updates	September 2006	NB613XJ

Contact Information

Hitachi America, Ltd.
Power and Industrial Division
50 Prospect Avenue
Tarrytown, NY 10591
U.S.A.
Phone: +1-914-631-0600
Fax: +1-914-631-3672

Hitachi Europe GmbH
Am Seestern 18
D-40547 Düsseldorf
Germany
Phone: +49-211-5283-0
Fax: +49-211-5283-649

Hitachi Asia Ltd.
16 Collyer Quay
#20-00 Hitachi Tower, Singapore 049318
Singapore
Phone: +65-538-6511
Fax: +65-538-9011

Hitachi Asia (Hong Kong) Ltd.
7th Floor, North Tower
World Finance Centre, Harbour City
Canton Road, Tsimshatsui, Kowloon
Hong Kong
Phone: +852-2735-9218
Fax: +852-2735-6793

Hitachi Australia Ltd.
Level 3, 82 Waterloo Road
North Ryde, N.S.W. 2113
Australia
Phone: +61-2-9888-4100
Fax: +61-2-9888-4188

Hitachi Industrial Equipment Systems Co., Ltd.
AKS Building, 3, Kanda Neribei-cho
Chiyoda-ku, Tokyo, 101-0022
Japan
Phone: +81-3-4345-6910
Fax: +81-3-4345-6067

Hitachi Industrial Equipment Systems Co, Ltd.
Narashino Division
1-1, Higashi-Narashino 7-chome
Narashino-shi, Chiba 275-8611
Japan
Phone: +81-47-474-9921
Fax: +81-47-476-9517



NOTE: To receive technical support for the Hitachi inverter you purchased, contact the Hitachi inverter dealer from whom you purchased the unit, or the sales office or factory contact listed above. Please be prepared to provide the following inverter nameplate information:

1. Model
2. Date of purchase
3. Manufacturing number (MFG No.)
4. Symptoms of any inverter problem

If any inverter nameplate information is illegible, please provide your Hitachi contact with any other legible nameplate items. To reduce unpredictable downtime, we recommend that you stock a spare inverter.

Getting Started

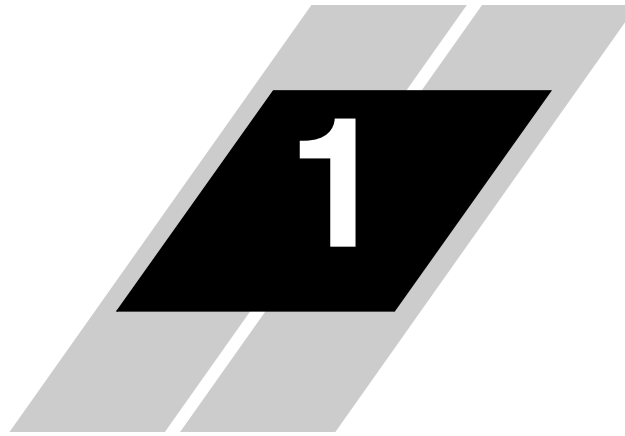

In This Chapter.... page

— Introduction 2
— SJ300 Inverter Specifications 6
— Introduction to Variable-Frequency Drives 13
— Frequently Asked Questions 17

Introduction

Main Features

Congratulations on your purchase of an SJ300 Series Hitachi inverter! This inverter drive features state-of-the-art circuitry and components to provide high performance. The housing footprint is exceptionally small, given the size of the corresponding motor. The Hitachi SJ300 product line includes more than twenty inverter models to cover motor sizes from 1/2 horsepower to 200 horsepower, in either 230 VAC or 480 VAC power input versions. The main features are:

- 200V Class and 400V Class inverters
- U.S. or European version available
- Sensorless vector control
- Regenerative braking circuit
- Different operator keypads available for RUN/STOP control and setting parameters
- Built-in RS-422 communications interface to allow configuration from a PC and for field bus external modules
- Sixteen programmable speed levels
- Motor constants are programmable, or may be set via auto-tuning
- PID control adjusts motor speed automatically to maintain a process variable value

The design of Hitachi inverters overcomes many of the traditional trade-offs between speed, torque and efficiency. The performance characteristics are:

- High starting torque of 150% rating or greater
- Continuous operation at 100% rated torque within a 1:10 speed range (6/60 Hz / 5/50 Hz) without motor derating
- Models from 0.4–11kW (1/2 to 15hp) have built-in dynamic braking units
- Cooling fan has ON/OFF selection to provide longer life



Model SJ300-037HFU (U.S. version)



Model SJ300-037HFE
(European version)

A full line of accessories from Hitachi is available to complete your motor control application. These include:

- Digital remote operator keypad
- Expansion card for sensor feedback
- Braking resistors
- Radio noise filters
- CE compliance filters
- Additional factory I/O network interface cards (to be announced)

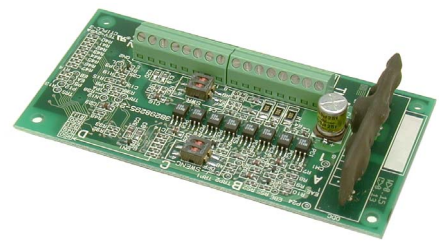

Expansion Card - Encoder Input

Digital Operator Interface Components

The SJ300 Series inverters have a detachable keypad (called a digital operator) on the front panel of the housing. The particular keypad that comes with the inverter depends on the country or continent corresponding to the particular model number. The standard digital operators occupy just part of the keypad recess in the panel. Therefore, the inverter comes with a snap-in panel filler plate that mounts below the keypad as shown.

These detachable keypads can be mounted in a NEMA cabinet panel door cut-out, for example. Threaded metal inserts on the rear of the keypads facilitate this external mounting configuration. A short cable then connects the keypad unit to the connector in the inverter keypad recess. See Chapter 3 for information on how to install and use these keypads and cables.



Digital Operator OPE-SRE
standard for -LFU and -HFU models



Digital Operator OPE-S
standard for -HFE models

The digital operator / copy unit is optional, and occupies the entire keypad recess when mounted. It has the additional capability of reading (uploading) the parameter settings in the inverter into its memory. Then you can install the copy unit on another inverter and write (download) the parameter settings into that inverter. OEMs will find this unit particularly useful, as one can use a single copy unit to transfer parameter settings from one inverter to many.

Other digital operator interfaces may be available from your Hitachi distributor for particular industries or international markets. Contact your Hitachi distributor for further details.



Optional Digital Operator / Copy Unit
SRW-0EX

Removable Components

The SJ300 Series inverters are designed for long life and ease of service. Several components are removable as shown below, aiding installation or parts replacement. Details on how and when to remove these parts are in the referenced chapters.

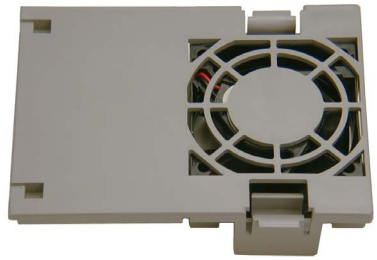

Fan Unit
(See Chapter 6 for servicing)





Digital Operator and Panel Filler Plate
(See Chapter 3 for instructions)





Auxiliary fan (on some models)

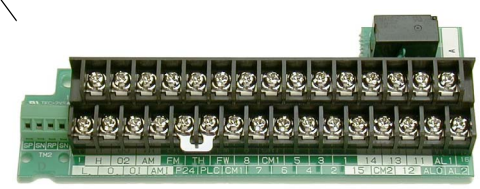

Control Signal Terminal Block
(See Chapter 4 for wiring)



Capacitor Bank for DC Link
(See Chapter 6 for servicing)



Cable entry/exit plate
(See Chapter 2 for instructions)

Specifications Label and Agency Approvals

The Hitachi SJ300 inverters have product specifications labels located on the front and the right side of the housing, as pictured to the right. Be sure to verify that the specifications on the labels match your power source, motor, and application safety requirements.



Product Labels

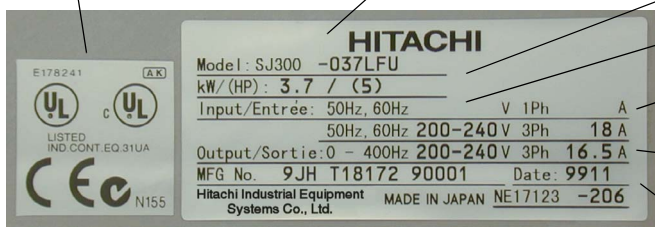

Regulatory agency approvals

Specifications

Inverter model number

Motor capacity for this model

Power Input Rating:
frequency, voltage, phase, current

Output Rating:
frequency, voltage, current

Manufacturing codes:
lot number, date, etc.

Model Number Convention

The model number for a specific inverter contains useful information about its operating characteristics. Refer to the model number legend below:

SJ300 — 004 H F U 2

Series name

Version number (_, 2, 3, ...)

Restricted distribution:
E=Europe, U=U.S., R=Japan

Configuration type
F = with digital operator (keypad)

Input voltage:
H = three-phase 400V class
L = three phase only, 200V class

Applicable motor capacity in kW

004 = 0.4 kW	075 = 7.5 kW	450 = 45 kW
007 = 0.75 kW	110 = 11 kW	550 = 55 kW
015 = 1.5 kW	150 = 15 kW	750 = 75 kW
022 = 2.2 kW	185 = 18.5 kW	900 = 90 kW
037 = 3.7 kW	220 = 22 kW	1100 = 110 kW
040 = 4.0 kW	300 = 30 kW	1320 = 132 kW
055 = 5.5 kW	370 = 37 kW	1500 = 150 kW

SJ300 Inverter Specifications

Tables for 200V class inverters

Note that "General Specifications" on page 1–9 covers all SJ300 inverters, followed by footnotes for all specifications tables. The 200V models in the upper table below (1/2 to 15 hp) include internal dynamic braking units (see "Dynamic Braking" on page 5–6).

Item		200V Class Specifications							
SJ300, 200V models, U.S. version		004LFU	007LFU	015LFU	022LFU	037LFU	055LFU	075LFU	110LFU
Applicable motor size, 4-pole *2	**HP**	**1/2**	**1**	**2**	**3**	**5**	**7.5**	**10**	**15**
	kW	0.4	0.75	1.5	2.2	3.7	5.5	7.5	11
Rated capacity (200/240V) kVA		1.0 / 1.2	1.7 / 2.0	2.5 / 3.1	3.6 / 4.3	5.7 / 6.8	8.3 / 9.9	11 / 13.3	15.9/ 19.1
Rated input voltage		3-phase: 200 to 240V ±10%, 50/60 Hz ±5%							
Rated input current (A)		3.8	5.5	8.3	12	18	26	35	51
Rated output voltage *3		3-phase (3-wire) 200 to 240V (corresponding to input voltage)							
Rated output current (A)		3.0	5.0	7.5	10.5	16.5	24	32	46
Efficiency at 100% rated output, %		85.1	89.5	92.3	93.2	94.0	94.4	94.6	94.8
Watt loss, approximate (W)	at 70% output	64	76	102	127	179	242	312	435
	at 100% output	70	88	125	160	235	325	425	600
Starting torque *6		200% at 0.5 Hz (SLV), 150% at around 0 Hz (SLV, 0 Hz domain, with motor one frame size down), 100% at 0 Hz (with feedback board)							
Dynamic braking approx. % torque, short time stop *7	internal res. only	50%			20%				10%
	with external res.	200%			160%	100%	80%		70%
DC braking		Variable operating frequency, time, and braking force							
Weight	kg / lb	3.5 / 7.7	3.5 / 7.7	3.5 / 7.7	3.5 / 7.7	3.5 / 7.7	3.5 / 7.7	5 / 11	5 / 11

Item		200V Class Specifications, continued						
SJ300, 200V models, U.S. version		150LFU	185LFU	220LFU	300LFU	370LFU	450LFU	550LFU
Applicable motor size *2	**HP**	**20**	**25**	**30**	**40**	**50**	**60**	**75**
	kW	15	18.5	22	30	37	45	55
Rated capacity (200/240V) kVA		22.1 / 26.6	26.3 / 31.5	32.9 / 39.4	41.9 / 50.2	50.2/60.2	63 / 75.6	76.2/91.4
Rated input voltage		3-phase: 200 to 240V ±10%, 50/60 Hz ±5%						
Rated input current (A)		70	84	105	133	160	200	242
Rated output voltage *3		3-phase (3-wire) 200 to 240V (corresponding to input voltage)						
Rated output current (A)		64	76	95	121	145	182	220
Efficiency at 100% rated output, %		94.9	95.0	95.0	95.1	95.1	95.1	95.1
Watt loss, approximate (W)	at 70% output	575	698	820	1100	1345	1625	1975
	at 100% output	800	975	1150	1550	1900	2300	2800
Starting torque *6		200% at 0.5 Hz (SLV), 150% at around 0 Hz (SLV, 0 Hz domain, with motor one frame size down), 100% at 0 Hz (with feedback board)						
Dynamic braking approx. % torque, short time stop *7	w/o braking unit	10%						
	with braking unit	30–200%	25–170%	25–150%	55–110%	45–90%	35–75%	30–60%
DC braking		Variable operating frequency, time, and braking force						
Weight	kg / lb	12 / 26.4	12 / 26.4	12 / 26.4	20 / 44	30 / 66	30 / 66	50 / 110

Tables for 400V class inverters

Note that "General Specifications" on page 1–9 covers all SJ300 inverters, followed by footnotes for all specifications tables. The 400V models in the upper table below (1 to 15 hp) include internal dynamic braking units (see "Dynamic Braking" on page 5–6).

Item			400V Class Specifications						
SJ300 inverters, 400V models	U.S. version		007HFU	015HFU	022HFU	040HFU	055HFU	075HFU	110HFU
	European ver.		007HFE	015HFE	022HFE	040HFE	055HFE	075HFE	110HFE
Applicable motor size *2		**HP**	**1**	**2**	**3**	**5**	**7.5**	**10**	**15**
		kW	0.75	1.5	2.2	4.0	5.5	7.5	11
Rated capacity (400 / 480V) kVA			1.7 / 2.0	2.6 / 3.1	3.6 / 4.4	5.9 / 7.1	8.3 / 9.9	11 / 13.3	15.9/19.1
Rated input voltage			3-phase (3-wire) 380 to 480V ±10%, 50/60 Hz ±5%						
Rated input current (A)			2.8	4.2	5.8	9.5	13	18	25
Rated output voltage *3			3-phase (3-wire): 380 to 480V (corresponding to input voltage)						
Rated output current (A)			2.5	3.8	5.3	8.6	12	16	23
Efficiency at 100% rated output, %			89.5	92.3	93.2	94.0	94.4	94.6	94.8
Watt loss, approximate (W)	at 70% output		76	102	127	179	242	312	435
	at 100% output		88	125	160	235	325	425	600
Starting torque *6			200% at 0.5 Hz (SLV), 150% at around 0 Hz (SLV, 0 Hz domain, with motor one frame size down), 100% at 0 Hz (with feedback board)						
Dynamic braking approx. % torque, short time stop *7	internal res. only		50%		20%				10%
	with external res.		200%			140%	100%		70%
DC braking			Variable operating frequency, time, and braking force						
Weight	kg / lb		3.5 / 7.7	3.5 / 7.7	3.5 / 7.7	3.5 / 7.7	3.5 / 7.7	5 / 11	5 / 11

Item			400V Class Specifications						
SJ300 inverters, 400V models	U.S. version		150HFU	185HFU	220HFU	300HFU	370HFU	450HFU	550HFU
	European ver.		150HFE	185HFE	220HFE	300HFE	370HFE	450HFE	550HFE
Applicable motor size *2		**HP**	**20**	**25**	**30**	**40**	**50**	**60**	**75**
		kW	15	18.5	22	30	37	45	55
Rated capacity (400 / 480V) kVA			22.1 / 26.6	26.3 / 31.5	33.2 / 39.9	40.1 / 48.2	51.9 / 62.3	62.3 / 74.8	76.2/91.4
Rated input voltage			3-phase (3-wire) 380 to 480V ±10%, 50/60 Hz ±5%						
Rated input current (A)			35	42	53	64	83	99	121
Rated output voltage *3			3-phase (3-wire): 380 to 480V (corresponding to input voltage)						
Rated output current (A)			32	38	48	58	75	90	110
Efficiency at 100% rated output, %			94.9	95.0	95.0	95.1	95.1	95.1	95.1
Watt loss, approximate (W)	at 70% output		575	698	820	1100	1345	1625	1975
	at 100% output		800	975	1150	1550	1900	2300	2800
Starting torque *6			200% at 0.5 Hz (SLV), 150% at around 0 Hz (SLV, 0 Hz domain, with motor one frame size down), 100% at 0 Hz (with feedback board)						
Dynamic braking approx. % torque, short time stop *7	w/o braking unit		10%						
	with braking unit		40–200%	40–200%	35–200%	110–170%	90–150%	70–120%	60–100%
DC braking			Variable operating frequency, time, and braking force						
Weight	kg / lb		12 / 26.4	12 / 26.4	12 / 26.4	20 / 44	30 / 66	30 / 66	50 / 110

Tables for 400V class inverters, continued...

Item			400V Class Specifications				
SJ300 inverters, 400V models	U.S. version		750HFU	900HFU	1100HFU	—	1500HFU
	European ver.		750HFE	900HFE	1100HFE	1320HFE	—
Applicable motor size *2		**HP**	**100**	**125**	**150**	**175**	**200**
		kW	75	90	110	132	150
Rated capacity (400 / 480V) kVA			103.2 / 123.8	121.9 / 146.3	150.3 / 180.4	180.1 / 216.1	180.1 / 216.1
Rated input voltage			3-phase (3-wire) 380 to 480V ±10%, 50/60 Hz ±5%				
Rated input current (A)			164	194	239	286	286
Rated output voltage *3			3-phase (3-wire): 380 to 480V (corresponding to input voltage)				
Rated output current (A)			149	176	217	260	260
Efficiency at 100% rated output, %			95.2	95.2	95.2	95.2	95.2
Watt loss, approximate (W)	at 70% output		2675	3375	3900	4670	4670
	at 100% output		3800	4800	5550	6650	6650
Starting torque *6			180% at 0.5 Hz (SLV), 130% at around 0 Hz (SLV, 0 Hz domain, with motor one frame size down), 100% at 0 Hz (with feedback board)				
Dynamic braking approx. % torque, short time stop *7	w/o braking unit		10%				
	with braking unit		45–70%	40–60%	30–50%	25–40%	20–35%
DC braking			Variable operating frequency, time, and braking force				
Weight	kg / lb		60 / 132	60 / 132	80 / 176	80 / 176	80 / 176

Footnotes for the preceding tables and the table that follows:

Note 1: The protection method conforms to JEM 1030.

Note 2: The applicable motor refers to Hitachi standard 3-phase motor (4-pole). When using other motors, care must be taken to prevent the rated motor current (50/60 Hz) from exceeding the rated output current of the inverter.

Note 3: The output voltage decreases as the main supply voltage decreases (except when using the AVR function). In any case, the output voltage cannot exceed the input power supply voltage.

Note 4: To operate the motor beyond 50/60 Hz, consult the motor manufacturer for the maximum allowable rotation speed.

Note 5: When SLV is selected, please set the carrier frequency higher than 2.1 kHz.

Note 6: At the rated voltage when using a Hitachi standard 3-phase, 4-pole motor (when selecting sensorless vector control—SLV).

Note 7: The braking torque via capacitive feedback is the average deceleration torque at the shortest deceleration (stopping from 50/60 Hz as indicated). It is not continuous regenerative braking torque. The average decel torque varies with motor loss. This value decreases when operating beyond 50 Hz. If a large regenerative torque is required, the optional regenerative braking resistor should be used.

Note 8: The frequency command will equal the maximum frequency at 9.8V for input voltage 0 to 10 VDC, or at 19.6 mA for input current 4 to 20 mA. If this characteristic is not satisfactory for your application, contact your Hitachi sales representative.

Note 9: The storage temperature refers to the short-term temperature during transport.

Note 10: Conforms to the test method specified in JIS C0911 (1984). For the model types excluded in the standard specifications, contact your Hitachi sales representative.

Note 11: NEMA 1 applies up to 22kW. An optional wire-entry conduit box is required for 30kW to 55kW models to meet NEMA 1 rating.

General Specifications

The following table (continued on next page) applies to all SJ300 inverter models.

Item			General Specifications
Protective enclosure *1, *11			IP20 (NEMA 1)
Control method			Line-to-line sine wave pulse-width modulation (PWM) control
Output frequency range *4			0.1 to 400 Hz
Frequency accuracy			Digital command: ± 0.01% of the maximum frequency Analog command: ± 0.2% (25°C ± 10°C)
Frequency setting resolution			Digital: ± 0.01 Hz; Analog: (max. frequency)/4000, [O] terminal: 12-bit 0 to 10V; [OI] terminal: 12-bit, 4-20mA; [O2] terminal: 12-bit -10 to +10V
Volt./Freq. characteristic *5			V/F optionally variable (30 to 400Hz base frequency), V/F control (constant torque, reduced torque), sensorless vector control
Speed fluctuation			± 0.5% (sensorless vector control)
Overload capacity (output current)			150% for 60 seconds, 200% (180% for 75kW / 100HP and larger) for 0.5 seconds
Acceleration/deceleration time			0.01 to 3600 sec., (linear curve profiles, accel./decel. selection), two-stage accel./decel.
Input signal	Freq. setting	Operator keypad	Up and Down keys / Value settings
		Potentiometer	Analog setting via potentiometer on operator keypad
		External signal *8	0 to 10 VDC (input impedance 10k Ohms), 4 to 20 mA (input impedance 250 Ohms), Potentiometer (1k to 2k Ohms, 2W)
		Serial port	RS485 interface
	FW/RV Run	Operator panel	Run key / Stop key (change FW/RV by function command)
		External signal	FW Run/Stop (NO contact), RV set by terminal assignment (NC/NO), 3-wire input available
	Intelligent Input terminals (assign eight functions to terminals)		RV (reverse run/stop), CF1~CF4 (multi-speed select), JG (jogging), DB (external DC braking), SET (set 2nd motor data), 2CH (2-stage accel./decel.), FRS (free-run stop), EXT (external trip), USP (unattended start protection), CS (commercial power source), SFT (software lock), AT (analog input voltage/current select), SET3 (set 3rd motor data), RS (reset inverter), STA (start, 3-wire interface), STP (stop, 3-wire interface), F/R (FW/RV 3-wire interface), PID (PID ON/OFF), PIDC (PID reset), CAS (control gain setting), UP (remote control Up function, motorized speed pot.), DWN (remote control Down function, motorized speed pot.), UDC (remote control data clearing), OPE (Operator control), SF1-SF7 (Multispeed bits 0-7), OLR (Overload limit change), TL (torque limit enable), TRQ1 (torque limit selection bit 1, LSB), TRQ2 (torque limit selection bit 2, MSB), PPI (Proportional / Proportional/Integral mode selection), BOK (Brake confirmation signal), ORT (Orientation – home search), LAC (LAC: LAD cancel), PCLR (Position deviation reset), STAT (pulse train position command input enable), NO (not selected)
	Thermistor input		One terminal (PTC characteristics)
Output signal	Intelligent Output terminals (assign six functions to five open collector outputs and one relay NO-NC contact)		RUN (run signal), FA1 (Frequency arrival type 1 – constant speed), FA2 (Frequency arrival type 2 – over-frequency), OL (overload advance notice signal 1), OD (Output deviation for PID control), AL (alarm signal), FA3 (Frequency arrival type 3 – at-frequency), OTQ (over-torque signal), IP (Instantaneous power failure signal), UV (Under-voltage signal), TRQ (In torque limit), RNT (Run time over), ONT (Power-ON time over), THM (thermal alarm), BRK (Brake release signal), BER (Brake error signal), ZS (Zero speed detect), DSE (speed deviation maximum), POK (Positioning completion), FA4 (Frequency arrival type 4 – over-frequency 2), FA5 (Frequency arrival type 5 – at-frequency 2), OL2 (Overload notice advance signal 2), Terminals 11-13 or 11-14 automatically configured as AC0-AC2 or AC0-AC3 per alarm code output selection)
	Intelligent monitor output terminals		Analog voltage monitor, analog current monitor (8-bit resolution), and PWM output, on terminals [AM], [AMI], [FM]
Display monitor			Output frequency, output current, motor torque, scaled value of output frequency, trip history, I/O terminal condition, input power, output voltage

Item		General Specifications
Other user-settable parameters		V/F free-setting (up to 7 points), freq. upper/lower limit, freq. jump, accel/decel curve selection, manual torque boost value and freq. adjustment, analog meter tuning, start frequency, carrier frequency, electronic thermal protection level, external frequency output zero/span reference, external frequency input bias start/end, analog input selection, retry after trip, restart after instantaneous power failure, various signal outputs, reduced voltage start, overload restriction, default value setting (US, Europe, Japan), deceleration and stop after power failure, AVR function, fuzzy accel/decel, auto-tuning (on-line/off-line), high-torque multi-operation, automatic energy-saving operation
Carrier frequency range		Models SJ300–015xxx to 750xxx: 0.5 to 12 kHz Models SJ300–900Hxx to 1320Hxx: 0.5 to 8 kHz
Protective functions		Over-current, overload, braking resistor overload, over voltage, EEPROM error, under-voltage error, CT (current transformer) error, CPU error, external trip, USP error, ground fault, input over voltage, instantaneous power failure, expansion card 1 error, expansion card 2 error, inverter thermal trip, phase failure detection, IGBT error, thermistor error
Environment	Temperature (*9)	Operating (ambient): -10 to 50°C / Storage: -20 to 65°C
	Humidity	20 to 90% humidity (non-condensing)
	Vibration *10	Models SJ300–004xxx to 220xxx: 5.9 m/s^2 (0.6G), 10 to 55 Hz Models SJ00–300xx to 1500xxx: 2.94 m/s^2 (0.3G), 10 to 55 Hz
	Location	Altitude 1,000 m or less, indoors (no corrosive gasses or dust)
Coating color		Gray
Accessories	Feedback PCB	SJ-FB (vector control loop speed sensor)
	Digital input PCB	SJ-DG (4-digit BCD / 16-bit binary)
	Others	EMI filters, input/output reactors, DC reactors, radio noise filters, braking resistors, braking units, LCR filter, communication cables, factory I/O network interface cards
Operator input devices		OPE–SRE (4-digit LED with potentiometer) / OPE–S (4-digit LED w/o potentiometer), Optional: OPE-SR (4-digit LED with potentiometer, Japanese/English overlay), SRW–0EX Multilingual operator with copy function (English, French, German, Italian, Spanish, and Portuguese)

Signal Ratings

Detailed ratings are in "Specifications of Control and Logic Connections" on page 4–9.

Signal / Contact	Ratings
Built-in power for inputs	24VDC supply, 100 mA maximum
Intelligent (programmable) logic inputs	27VDC maximum, 4.7kΩ input impedance
Intelligent (programmable) logic outputs	Open collector type, 50mA max. ON state current, 27 VDC maximum OFF state voltage
Thermistor input	Minimum thermistor power 100mW
PWM output	0 to 10VDC, 1.2 mA max., 50% duty cycle
Voltage analog output	0 to 10VDC, 2 mA max.
Current analog output	4-20 mA, nominal load impedance 250Ω
Analog input, current	4 to 19.6 mA range, 20 mA nominal
Analog input, voltage	0 to 9.6 VDC range, 10VDC nominal, 12VDC max., input impedance 10 kΩ
+10V analog reference	10VDC nominal, 10 mA maximum
Alarm relay, normally closed contacts	Maximum loads: 250VAC, 2A; 30VDC, 8A resistive load 250VAC, 0.2A; 30VDC, 0.6A inductive load Minimum loads: 100 VAC, 10mA; 5VDC, 100mA
Alarm relay, normally open contacts	250VAC, 1A; 30VDC 1A max. resistive load / 250VAC, 0.2A; 30VDC, 0.2A max. inductive load Min. loads: 100 VAC, 10mA; 5VDC, 100mA

Derating Curves

The maximum available inverter current output is limited by the carrier frequency and ambient temperature. The carrier frequency is the inverter's internal power switching frequency, settable from 0.5 kHz to 12 kHz. Choosing a higher carrier frequency tends to decrease audible noise, but it also increases the internal heating of the inverter, thus decreasing (derating) the maximum current output capability. Ambient temperature is the temperature just outside the inverter housing—such as inside the control cabinet where the inverter is mounted. A higher ambient temperature decreases (derates) the inverter's maximum current output capacity.

Use the following derating curves to help determine the optimal carrier frequency setting for your inverter, and to find the output current derating. Be sure to use the proper curve for your particular SJ300 inverter model number.

SJ300 1.5 to 22 kW at 50 deg. C ambient

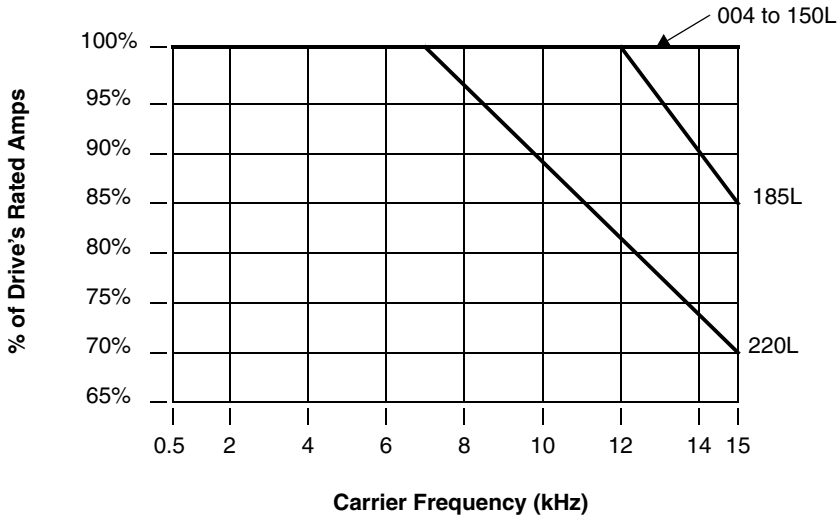

SJ300 30 to 55 kW at 50 deg. C ambient

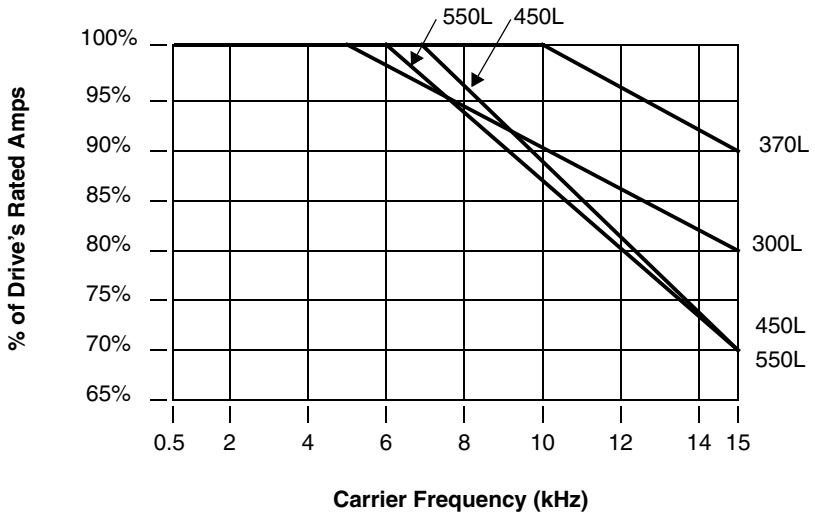

Derating curves, continued...

SJ300 30 to 55 kW at 50 deg. C ambient, continued

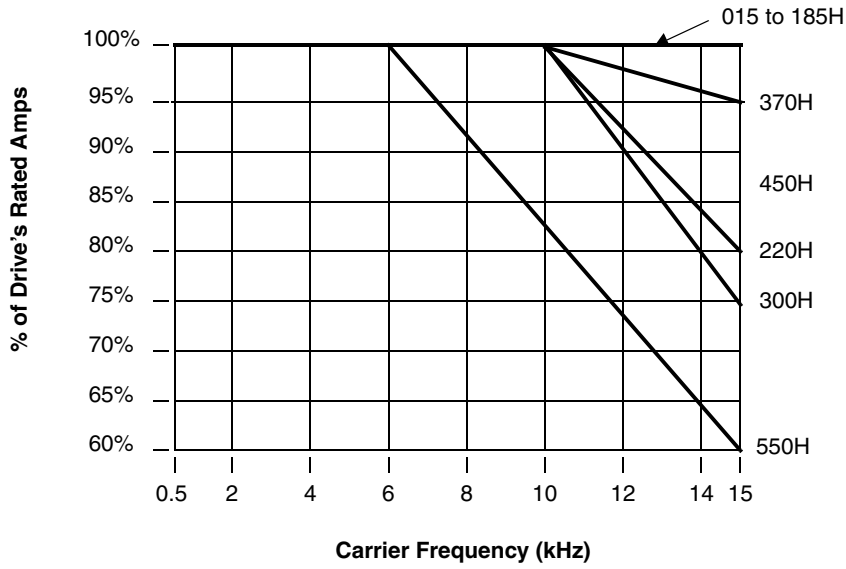

SJ300 75 to 150 kW at 50 deg. C ambient

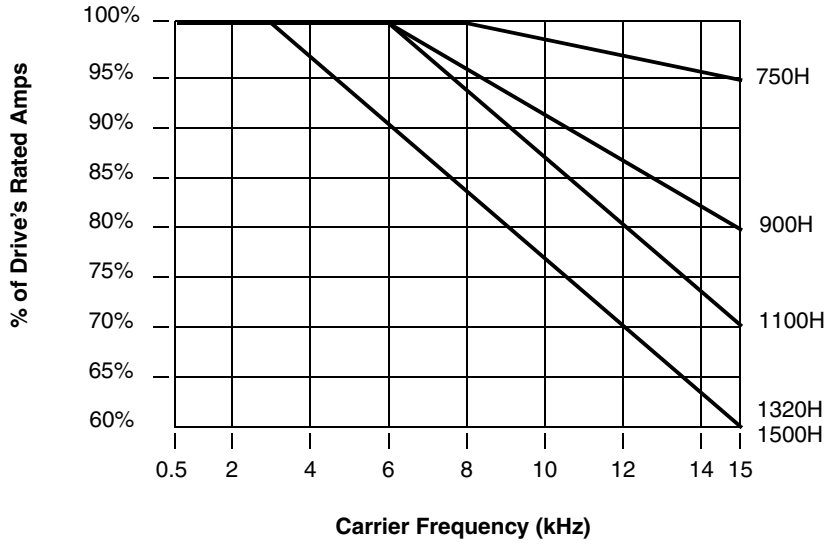

Introduction to Variable-Frequency Drives

The Purpose of Motor Speed Control for Industry

Hitachi inverters provide accurate speed control for 3-phase AC induction motors. You connect AC power to the inverter, and connect the inverter to the motor. Many applications can benefit from the use of variable-speed drives in several ways:

- Energy savings - HVAC
- Need to coordinate speed with an adjacent process - textiles and printing presses
- Need to control acceleration and deceleration (torque)
- Sensitive loads - elevators, food processing, pharmaceuticals

What is an Inverter?

The term *inverter* and *variable-frequency drive* are related and somewhat interchangeable. An electronic drive for an AC motor controls the motor's speed by *varying the frequency* of the power sent to the motor.

An inverter, in general, is a device that converts DC power to AC power. The figure below shows how the variable-frequency drive employs an internal inverter. The drive first converts incoming AC power to DC through a rectifier bridge, creating an internal DC bus voltage. Then the inverter circuit converts the DC back to AC again to power the motor. The special inverter can vary its output frequency and voltage according to the desired motor speed.

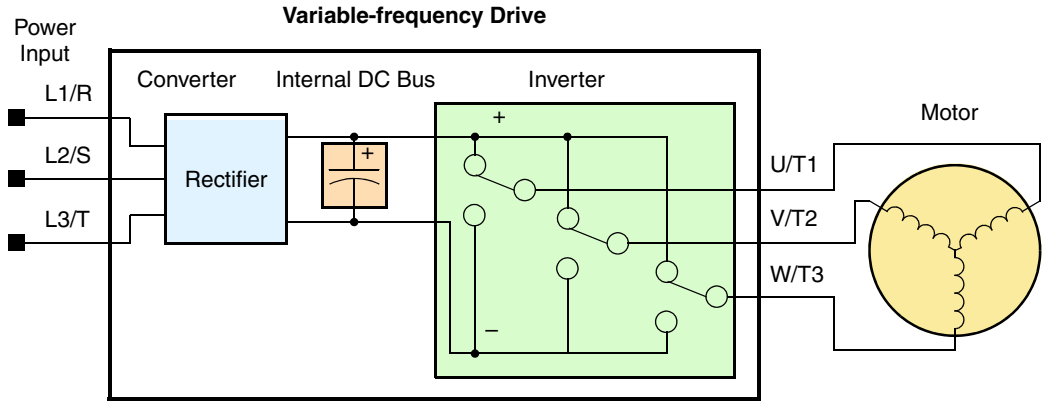

The simplified drawing of the inverter shows three double-throw switches. In Hitachi inverters, the switches are actually IGBTs (isolated gate bipolar transistors). Using a commutation algorithm, the microprocessor in the drive switches the IGBTs ON and OFF at a very high speed to create the desired output waveforms. The inductance of the motor windings helps smooth out the pulses.

Torque and Constant Volts/ Hertz Operation

In the past, AC variable speed drives used an open loop (scalar) technique to control speed. The constant-volts-per-hertz operation maintains a constant ratio between the applied voltage and the applied frequency. With these conditions, AC induction motors inherently delivered constant torque across the operating speed range. For some applications, this scalar technique was adequate.

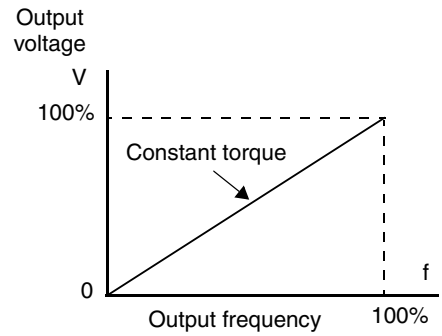

Today, with the advent of sophisticated microprocessors and digital signal processors (DSPs), it is possible to control the speed and torque of AC induction motors with unprecedented accuracy. The SJ300 utilizes these devices to perform complex mathematical calculations required to achieve superior performance. The technique is referred to as *sensorless vector control*. It allows the drive to continuously monitor its output voltage and current, and their relationship to each other. From this it mathematically calculates two vector currents. One

vector is related to motor flux current, and the other to motor torque current. The ability to separately control these two vectors is what allows the SJ300 to deliver extraordinary low-speed performance and speed control accuracy.

Inverter Input and Three-Phase Power

The Hitachi SJ300 Series of inverters includes two sub-groups: the 200V class and the 400V class inverters. The drives described in this manual may be used in either the United States or Europe, although the exact voltage level for commercial power may be slightly different from country to country. Accordingly, a 200V class inverter requires (nominal) 200 to 240VAC, and a 400V class inverter requires from 380 to 480VAC. All SJ300 inverters require three-phase input power, whether 200V or 400V class.



TIP: If your application only has single phase power available, refer to the Hitachi SJ100 Series inverters. SJ100 inverters of 3HP or less can accept single phase input power.

The common terminology for single phase power is Line (L) and Neutral (N). Three-phase power connections are usually labeled Line 1 (L1), Line 2 (L2) and Line 3 (L3). In any case, the power source should include a ground connection. That ground connection will need to connect to the inverter chassis and to the motor frame (see "Wire the Inverter Output to Motor" on page 2–20).

Inverter Output to the Motor

The AC motor must be connected only to the inverter's output terminals. The output terminals are uniquely labeled (to differentiate them from the input terminals) with the designations U/T1, V/T2, and W/T3. This corresponds to typical motor lead connection designations T1, T2, and T3. It is often not necessary to connect a particular inverter output to a particular motor lead for a new application. The consequence of swapping any two of the three connections is the reversal of the motor direction. In applications where reversed rotation could cause equipment damage or personnel injury, be sure to verify direction of rotation before attempting full-speed operation. For safety to personnel, you must connect the motor chassis ground to the ground connection at the bottom of the inverter housing.

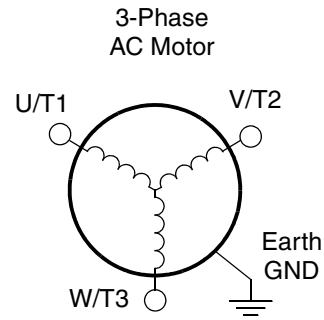

Notice the three connections to the motor do not include one marked "Neutral" or "Return." The motor represents a balanced "Y" impedance to the inverter, so there is no need for a separate return. In other words, each of the three "Hot" connections serves also as a return for the other connections, because of their phase relationship.

The Hitachi inverter is a rugged and reliable device. The intention is for the inverter to assume the role of controlling power to the motor during all normal operations. Therefore, this manual instructs you not to switch OFF power to the inverter *while the motor is running* (unless it is an emergency stop). Also, do not install or use disconnect switches in the wiring from the inverter to the motor (except thermal disconnect). Of course, safety-related devices such as fuses must be in the design to break power during a malfunction, as required by NEC and local codes.

Intelligent Functions and Parameters

Much of this manual is devoted to describing how to use inverter functions and how to configure inverter parameters. The inverter is microprocessor-controlled, and has many independent functions. The microprocessor has an on-board EEPROM for parameter storage. The inverter's front panel keypad provides access to all functions and parameters, which you can access through other devices as well. The general name for all these devices is the *digital operator*, or *digital operator panel*. Chapter 2 will show you how to get a motor running, using a minimal set of function commands or configuring parameters.

The optional read/write programmer will let you read and write inverter EEPROM contents from the programmer. This feature is particularly useful for OEMs who need to duplicate a particular inverter's settings in many other inverters in assembly-line fashion.



Braking

In general, braking is a force that attempts to slow or stop motor rotation. So it is associated with motor deceleration, but may also occur even when the load attempts to drive the motor faster than the desired speed (overhauling). If you need the motor and load to decelerate quicker than their natural deceleration during coasting, we recommend installing a braking resistor. The dynamic braking unit (built into certain SJ300 models) sends excess motor energy into a resistor to slow the motor and load (see "Introduction" on page 5–2 and "Dynamic Braking" on page 5–6 for more information). For loads that continuously overhaul the motor for extended periods of time, the SJ300 may not be suitable (contact your Hitachi distributor).

The inverter parameters include acceleration and deceleration, which you can set to match the needs of the application. For a particular inverter, motor, and load, there will be a range of practically achievable accelerations and decelerations.

Velocity Profiles

The SJ300 inverter is capable of sophisticated speed control. A graphical representation of that capability will help you understand and configure the associated parameters. This manual makes use of the velocity profile graph used in industry (shown at right). In the example, the acceleration is a ramp to a set speed, and the deceleration is a decline to a stop.

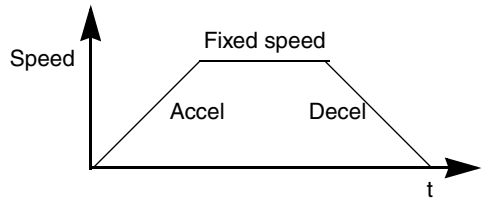

Velocity Profile

Acceleration and deceleration settings specify the time required to go from a stop to maximum frequency (or visa versa). The resulting slope (speed change divided by time) is the acceleration or deceleration. An increase in output frequency uses the acceleration slope, while a decrease uses the deceleration slope. The accel or decel time a particular speed change depends on the starting and ending frequencies. However, the slope is constant, corresponding to the full-scale accel or decel time setting.

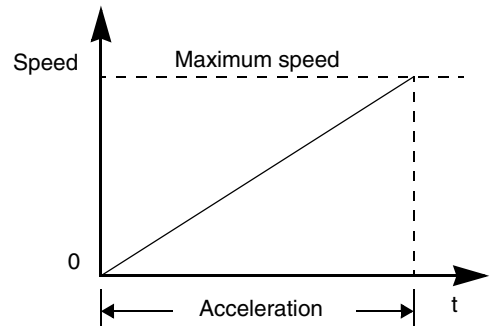

Acceleration (time) setting

For example, the full-scale acceleration setting (time) may be 10 seconds—the time required to go from 0 to 60 Hz.

The SJ300 inverter can store up to 16 preset speeds. And, it can apply separate acceleration and deceleration transitions from any preset to any other preset speed. A multi-speed profile (shown at right) uses two or more preset speeds, which you can select via intelligent input terminals. This external control can apply any preset speed at any time. Alternatively, the selected speed is infinitely variable across the speed range. You can use the potentiometer control on the keypad for manual control. The drive accepts analog 0-10V signals and 4-20 mA control signals as well.

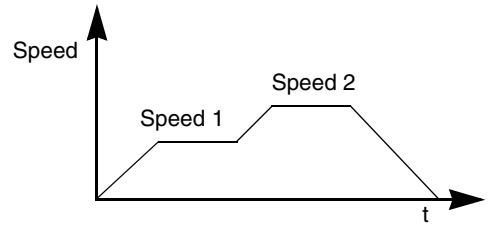

Multi-speed Profile

The inverter can drive the motor in either direction. Separate FW and RV commands select the direction of rotation. The motion profile example shows a forward motion followed by a reverse motion of shorter duration. The speed presets and analog signals control the magnitude of the speed, while the FW and RV commands determine the direction before the motion starts.

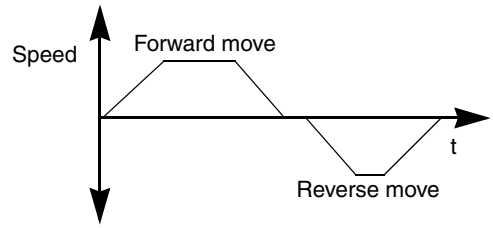

Bi-directional Profile



NOTE: The SJ300 can move loads in both directions. However, it is not designed for use in servo-type applications that use a bipolar velocity signal that determines direction.

Frequently Asked Questions

Q. What is the main advantage in using an inverter to drive a motor, compared to alternative solutions?

A. An inverter can vary the motor speed with very little energy loss, unlike mechanical or hydraulic speed control solutions. The resulting energy savings can often pay for the inverter in a relatively short time.

Q. The term "inverter" is a little confusing, since we also use "drive" and "amplifier" to describe the electronic unit that controls a motor. What does "inverter" mean?

A. The terms are used somewhat interchangeably in industry. Nowadays, the terms *drive*, *variable-frequency drive*, *variable-speed drive*, and *inverter* are generally used to describe electronic, microprocessor-based motor speed controllers. In the past, *variable speed drive* also referred to various mechanical means to vary speed. *Amplifier* is a term almost exclusively used to describe drives for servo or stepper motors.

Q. Although the SJ300 inverter is a variable speed drive, can I use it in a fixed-speed application?

A. Yes, sometimes an inverter can be used simply as a "soft-start" device, providing controlled acceleration and deceleration to a fixed speed. Other functions of the SJ300 may be useful in such applications, as well. However, using a variable speed drive can benefit many types of industrial and commercial motor applications, by providing controlled acceleration and deceleration, high torque at low speeds, and energy savings over alternative solutions.

Q. Can I use an inverter and AC induction motor in a positioning application?

A. That depends on the required precision, and the slowest speed the motor must turn and still deliver torque. The SJ300 inverter will deliver 200% rated torque while turning the motor at only 0.5 Hz. DO NOT use an inverter if you need the motor to stop and hold the load position without the aid of a mechanical brake (use a servo or stepper motion control system).

Q. Does the optional digital operator interface or the PC software (DOP Professional) provide features beyond what is available from the keypad on the unit?

A. Yes. However, note first that the same set of parameters and functions are equally accessible from either the unit's keypad or from remote devices. The DOP Professional PC software lets you save or load inverter configurations to or from a disk file. And, the hand-held digital operator provides hard-wired terminals, a safety requirement for some installations.

Q. Why does the manual or other documentation use terminology such as "200V class" instead of naming the actual voltage, such as "230 VAC?"

A. A specific inverter model is set at the factory to work across a voltage range particular to the destination country for that model. The model specifications are on the label on the side of the inverter. A European 200V class inverter ("EU" marking) has different parameter settings than a USA 200V class inverter ("US" marking). The initialization procedure (see "Restoring Factory Default Settings" on page 6–9) can set up the inverter for European or US commercial voltage ranges.

Q. Why doesn't the motor have a neutral connection as a return to the inverter?

A. The motor theoretically represents a "balanced Y" load if all three stator windings have the same impedance. The Y connection allows each of the three wires to alternately serve as input or return on alternate half-cycles.

Q. Does the motor need a chassis ground connection?

A. Yes, for several reasons. Most importantly, this provides protection in the event of a short in the motor that puts a hazardous voltage on its housing. Secondly, motors exhibit leakage currents that increase with aging. Lastly, a grounded chassis generally emits less electrical noise than an ungrounded one.

Q. What type of motor is compatible with the Hitachi inverters?

A. **Motor type** – It must be a three phase AC induction motor. Use an inverter-grade motor that has 800V insulation for 200V class inverters, or 1600V insulation for 400V class.
Motor size – In practice, it's better to find the right size motor for your application; then look for the inverter to match the motor.



NOTE: There may be other factors that will affect motor selection, including heat dissipation, motor operating speed profile, enclosure type, and cooling method.

Q. How many poles should the motor have?

A. Hitachi inverters can be configured to operate motors with 2, 4, 6, or 8 poles. The greater the number of poles, the slower the top motor speed will be, but it will have higher torque at the base speed.

Q. Will I be able to add dynamic (resistive) braking to my Hitachi SJ300 drive after the initial installation?

A. Yes. Models SJ300-004XXX through SJ300-110XXX have built-in dynamic braking units. You can add an external resistor to these models to improve braking performance. Models SJ300-150XXX through SJ300-1500XXX require you to add an external braking unit. The braking resistor connects to the external braking unit for those models. More information on dynamic braking is located in Chapter 5.

Q. How will I know if my application will require resistive braking?

A. For new applications, it may be difficult to tell before you actually test a motor/drive solution. In general, some applications can rely on system losses such as friction to serve as the decelerating force, or otherwise can tolerate a long decel time. These applications will not need dynamic braking. However, applications with a combination of a high-inertia load and a required short decel time will need dynamic braking. This is a physics question that may be answered either empirically or through extensive calculations.

Q. Several options related to electrical noise suppression are available for the Hitachi inverters. How can I know if my application will require any of these options?

A. The purpose of these noise filters is to reduce the inverter electrical noise so the operation of nearby electrical devices is not affected. Some applications are governed by particular regulatory agencies, and noise suppression is mandatory. In those cases, the inverter must have the corresponding noise filter installed. Other applications may not need noise suppression, unless you notice electrical interference with the operation of other devices.

Q. The SJ300 features a PID loop feature. PID loops are usually associated with chemical processes, heating, or process industries in general. How could the PID loop feature be useful in my application?

A. You will need to determine the particular main variable in your application the motor affects. That is the process variable (PV) for the motor. Over time, a faster motor speed will cause a faster change in the PV than a slow motor speed will. By using the PID loop feature, the inverter commands the motor to run at the optimal speed required to maintain the PV at the desired value for current conditions. Using the PID loop feature will require an additional sensor and other wiring, and is considered an advanced application.

Inverter Mounting and Installation

2

In This Chapter.... page

— Orientation to Inverter Features 2
— Basic System Description 5
— Step-by-Step Basic Installation 6
— Powerup Test 21
— Using the Front Panel Keypad 23

Call 1(800)985-6929 for Sales hitachiacdrive.com sales@hitachiacdrive.com

Orientation to Inverter Features

Unpacking and Inspection

Please take a few moments to unpack your new SJ300 inverter and perform these steps:

1. Look for any damage that may have occurred during shipping.
2. Verify the contents of the box include:
   a. One SJ300 inverter
   b. One Instruction Manual (supplied by printed book for –FU/–FR models, supplied on CR-ROM for –FE models)
   c. One SJ300 Quick Reference Guide
   d. One packet of desiccant—discard (not for human consumption)
3. Inspect the specifications label on the front or side of the inverter. Make sure it matches the product part number you ordered.

Main Physical Features

The SJ300 Series inverters vary in size according to the current output rating and motor size for each model number. All feature the same basic keypad and connector interface for consistent ease of use. The inverter construction has a heat sink at the back of the housing. The fans enhance heat sink performance. Mounting holes are pre-drilled in the heat sink for your convenience. Never touch the heat sink during or just after operation; it can be very hot.

The electronics housing and front panel are built onto the front of the heat sink. The front panel has three levels of physical access designed for convenience and safety:

- **First-level access** – for basic use of inverter and editing parameters during powered operation (power is ON)
- **Second-level access** – for wiring the inverter power supply or motor (power is OFF)
- **Third-level access** – for accessing the expansion bay for adding/removing expansion boards (power is OFF)

1. **First-level Access** - View the unit just as it came from the box as shown. The OPE-SRE or OPE-S digital operator keypad comes installed in the inverter. The four-digit display can show a variety of performance parameters. LEDs indicate whether the display units are Hertz, Volts, Amperes, or kW. Other LEDs indicate Power (external), and Run/Stop Mode and Program/Monitor Mode status. Membrane keys Run and Stop/Reset, and a Min/Max frequency control knob (OPE-SRE only) control motor operation. These controls and indicators are usually the only ones needed after the inverter installation is complete.

   The FUNC., ▲1, ▼2, and STR keys allow an operator to change the inverter's functions and parameter values, or to select the one monitored on the 4-digit display. Note that some parameters may not be edited if the inverter is in Run mode.



Call 1(800)985-6929 for Sales hitachiacdrive.com sales@hitachiacdrive.com

2. **Second-level access** - First, ensure no power source of any kind is connected to the inverter. If power has been connected, wait five minutes after powerdown and verify the Charge Lamp indicator is OFF to proceed. Then locate the recessed retention screw at the bottom of the main front panel. Use a small Phillips screwdriver to remove the screw. Press the two latch release areas near the "SJ300" label as shown, and simultaneously slide the lower front downward to release for removal.



Notice the large power terminals at the bottom of the wiring area. The rubber grommets below the power terminals are for wire entry/exit to the power source and motor. Never operate the inverter with the front panel removed.

The control terminals connect logic or analog signals for control and monitoring of the inverter. The nearby alarm relay provides both normally-open and normally-closed logic for interface to an external alarm. The alarm circuit may carry hazardous live voltages even when the main power to the inverter is OFF. So, never directly touch any terminal or circuit component.

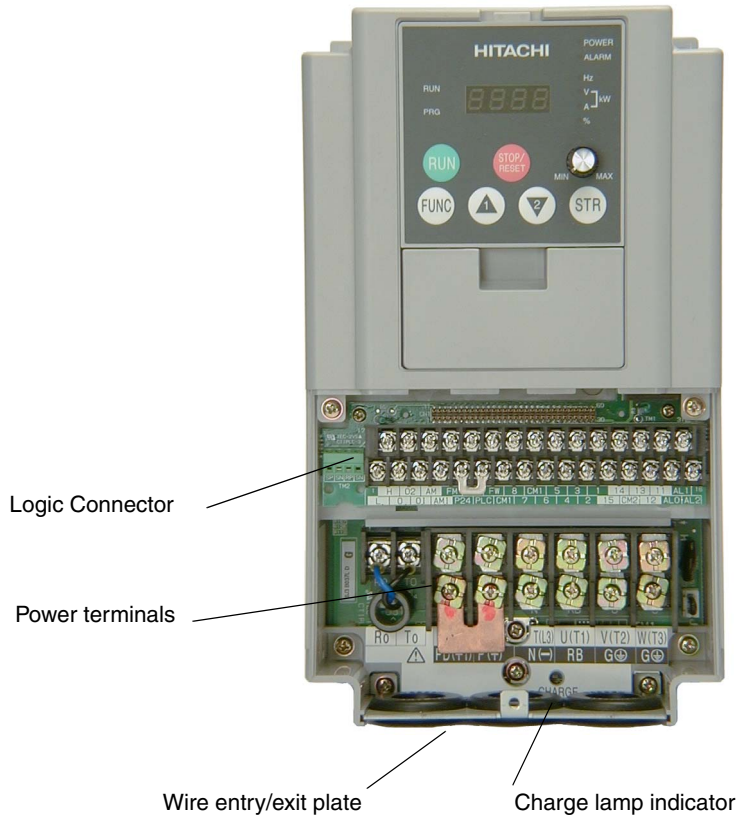

WARNING: Be sure to wait five minutes after powerdown and verify the charge lamp indicator is OFF to proceed. Otherwise there is the risk of electric shock.

3. Third-level access - The SJ300 provides for field installation of interface circuits. These circuits are on expansion cards, to be installed in the expansion bay. To access the expansion bay, you will need to remove the upper front panel. Use the latch to release the digital operator (the panel filler plate may remain). Remove the two retention screws the bottom corners of the upper front panel. Lift up at the bottom, then disengage the two hinge latches at the top.



The expansion bay has two sites for adding expansion cards. Each card connects via the interface connector, and mounts using three standoff screw locations. Further details on accessories are in Chapter 5. You may also refer to the instruction manual that comes with each type of expansion card.



The following sections will describe the system design and guide you through a step-by-step installation process. After the section on wiring, this chapter will show how to use the front panel keys to access functions and edit parameters.

Basic System Description

A motor control system will obviously include a motor and inverter, as well as a breaker or fuses for safety. If you are connecting a motor to the inverter on a test bench just to get started, that's all you may need for now. But a system can also have a variety of additional components. Some can be for noise suppression, while others may enhance the inverter's braking performance. The figure and table below show a system with all the optional components you may need in your finished application.

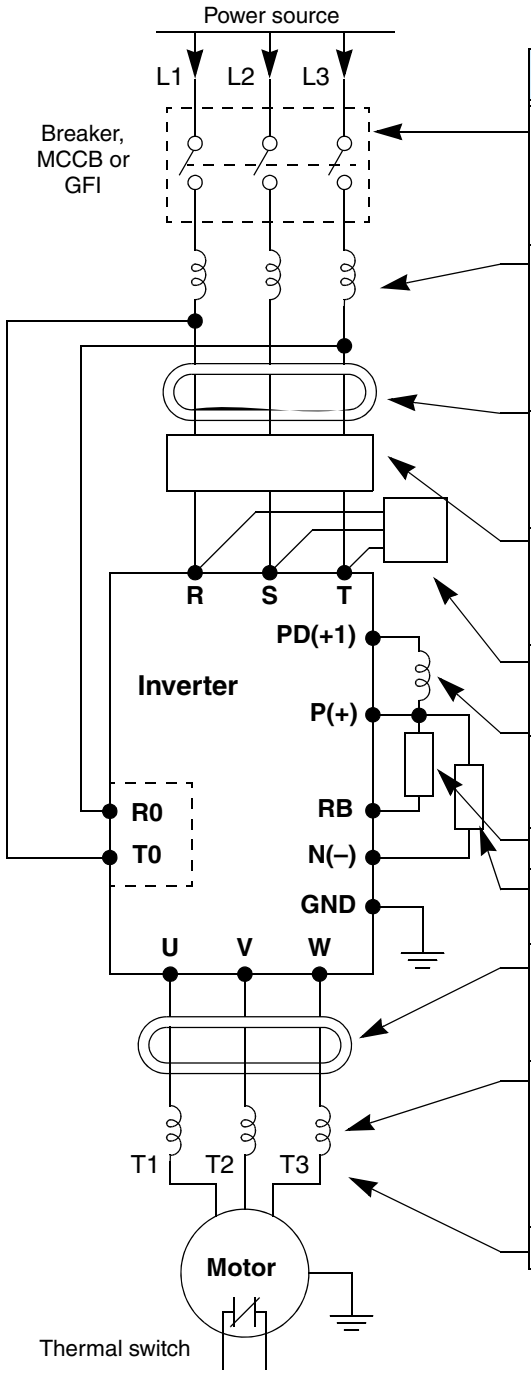

Name	Function
Breaker / disconnect	A molded-case circuit breaker (MCCB), ground fault interrupter breaker (GFI), or a fused disconnect device. NOTE: The installer must refer to the NEC and local codes to ensure safety and compliance.
Input side AC Reactor	This is useful in suppressing harmonics induced on the power supply lines, or when the main power voltage imbalance exceeds 3% (and power source capacity is more than 500 kVA), or to smooth out line fluctuations. It also improves the power factor.
Radio noise filter	Electrical noise interference may occur on nearby equipment such as a radio receiver. This magnetic choke filter helps reduce radiated noise (can also be used on output).
EMI filter (for CE applications, see Appendix D)	This filter reduces the conducted noise in the power supply wiring between the inverter and the power distribution system. Connect it to the inverter primary (input side).
Radio noise filter (use in non-CE applications)	This capacitive filter reduces radiated noise from the main power wires in the inverter input side.
DC link choke	The choke suppresses harmonics generated by the inverter. However, it will not protect the input diode bridge rectifier.
Braking resistor	Braking components are useful for increasing the inverter's control torque for high duty-cycle (ON-OFF) applications, and improving the decelerating capability.
Braking unit	
Radio noise filter	Electrical noise interference may occur on nearby equipment such as a radio receiver. This magnetic choke filter helps reduce radiated noise (can also be used at input).
Output side AC reactor	This reactor reduces the vibrations in the motor caused by the inverter's switching waveform, by smoothing the waveform to approximate commercial power quality. It is also useful to reduce harmonics when wiring from the inverter to the motor is more than 10m in length.
LCR filter	Sine wave shaping filter for output side.

NOTE: Some components are required for regulatory agency compliance (see Chapter 5 and Appendix D).

Step-by-Step Basic Installation

This section will guide you through the following basic steps of installation:

1. Study the warnings associated with mounting the inverter.
2. Select a suitable mounting location.



NOTE: If the installation is in an EU country, study the EMC installation guidelines in Appendix D.

3. Cover the inverter's top ventilation openings to prevent debris from falling inside.
4. Check the inverter mounting dimensions for footprint and mounting hole locations.
5. Study the caution and warning messages associated with wiring the inverter.
6. Connect wiring for the inverter power input.
7. Connect wiring to the motor.
8. Uncover the inverter's ventilation openings that were covered in Step 3.
9. Perform a powerup test.
10. Make observations and check your installation.



Choosing a Mounting Location

Step 1: Study the following caution messages associated with mounting the inverter. This is the time when mistakes are most likely to occur that will result in expensive rework, equipment damage, or personal injury.



CAUTION: Be sure to install the unit on flame-resistant material such as a steel plate. Otherwise, there is the danger of fire.



CAUTION: Be sure not to place any flammable materials near the inverter. Otherwise, there is the danger of fire.



CAUTION: Be sure not to let the foreign matter enter vent openings in the inverter housing, such as wire clippings, spatter from welding, metal shavings, dust, etc. Otherwise, there is the danger of fire.



CAUTION: Be sure to install the inverter in a place that can bear the weight according to the specifications in the text (Chapter 1, Specifications Tables). Otherwise, it may fall and cause injury to personnel.



CAUTION: Be sure to install the unit on a perpendicular wall that is not subject to vibration. Otherwise, it may fall and cause injury to personnel.



CAUTION: Be sure not to install or operate an inverter that is damaged or has missing parts. Otherwise, it may cause injury to personnel.



CAUTION: Be sure to install the inverter in a well-ventilated room that does not have direct exposure to sunlight, a tendency for high temperature, high humidity or dew condensation, high levels of dust, corrosive gas, explosive gas, inflammable gas, grinding-fluid mist, salt air, etc. Otherwise, there is the danger of fire.

2 Ensure Adequate Ventilation

Step 2: To summarize the caution messages—you will need to find a solid, non-flammable, vertical surface that is in a relatively clean and dry environment. In order to ensure enough room for air circulation around the inverter to aid in cooling, maintain the specified clearance around the inverter specified in the diagram.

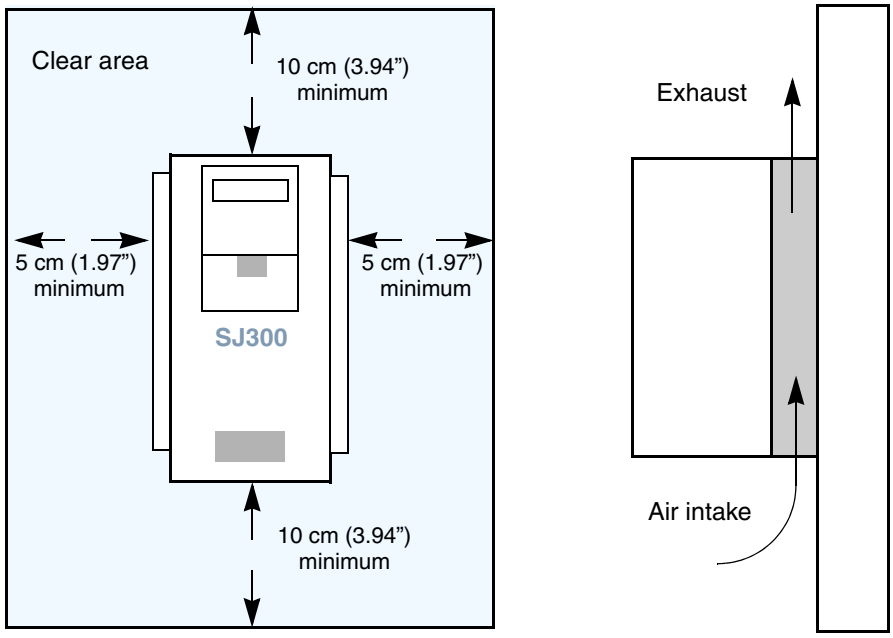

CAUTION: Be sure to maintain the specified clearance area around the inverter and to provide adequate ventilation. Otherwise, the inverter may overheat and cause equipment damage or fire.

3 Keep Debris Out of Inverter Vents

Step 3: Before proceeding to the wiring section, it's a good time to *temporarily* cover the inverter's ventilation openings. Paper and masking tape are all that is needed. This will prevent harmful debris such as wire clippings and metal shavings from entering the inverter during installation.

Please observe this checklist while mounting the inverter:

1. The ambient temperature must be in the range of -10 to 40°C. If the range will be up to 50°C (maximum rating), you will need to refer to "Derating Curves" on page 1–11.
2. Keep any other heat-producing equipment as far away from the inverter as possible.
3. When installing the inverter in an enclosure, maintain the clearance around the inverter and verify that its ambient temperature is within specification when the enclosure door is closed.
4. Do not open the main front panel door at any time during operation.

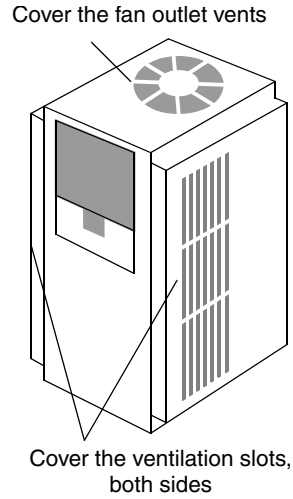

4

Check Inverter Dimensions

Step 4: Locate the applicable drawing on the following pages for your inverter. Dimensions are given in millimeters (inches) format. Smaller models come equipped with NEMA1 adapter (conduit box) for wire entry for U.S. models (LFU and HFU). The NEMA 1 adapter is optional for larger models as indicated in the drawings.

Model

SJ300 -004LFU
-007LFU/HFE, HFU
-015LFU/HFE, HFU
-022LFU/HFE, HFU
-037LFU/HFE, HFU
-055LFU/HFE, HFU

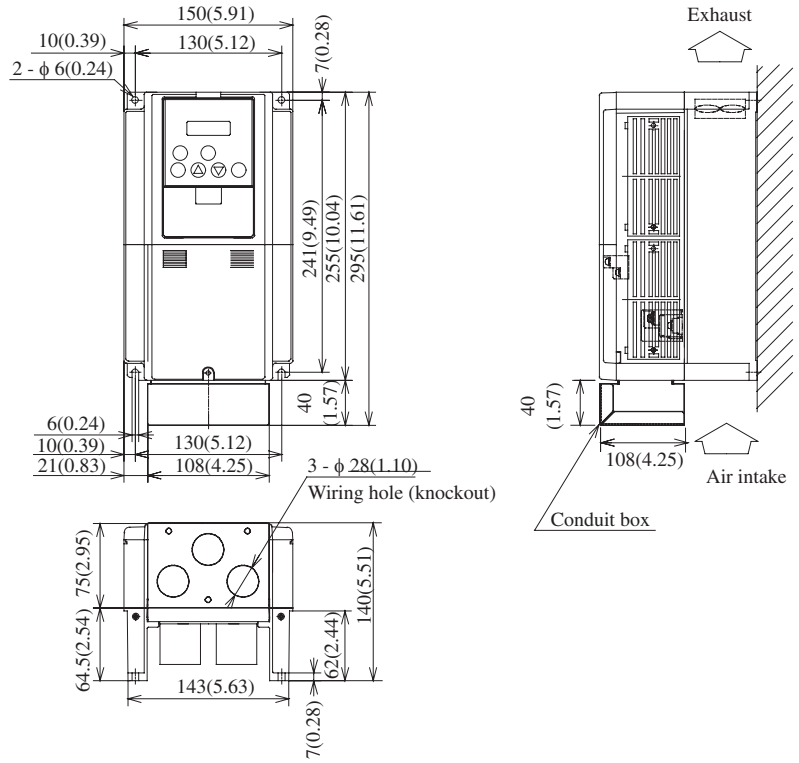

Model

SJ300 -075LFU/HFE, HFU
-110LFU/HFE, HFU

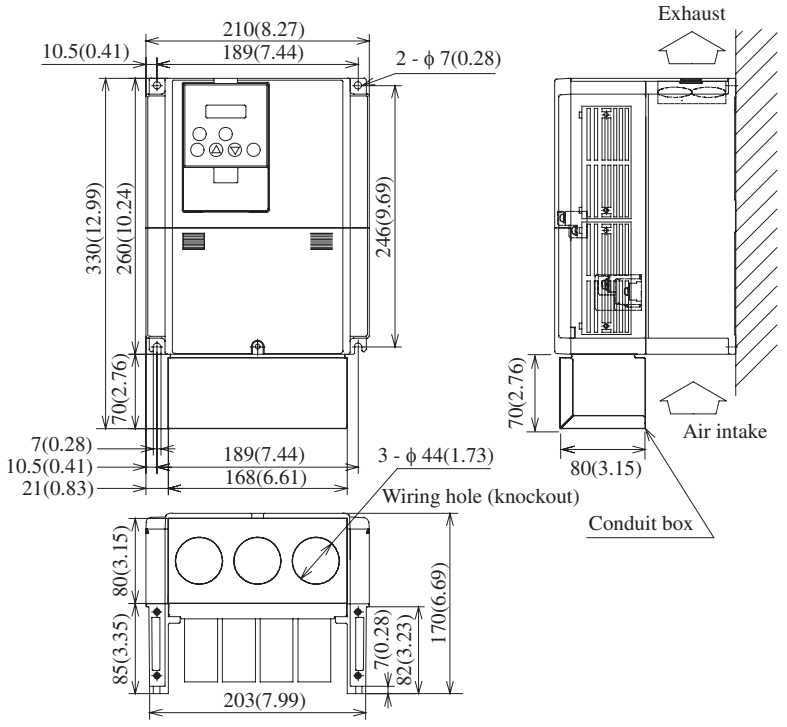

NOTE: Be sure to use lock washers or other means to ensure screws do not loosen due to vibration.

Dimensional drawings, continued...

Model

SJ300 -150LFU/HFE, HFU
-185LFU/HFE, HFU
-220LFU/HFE, HFU

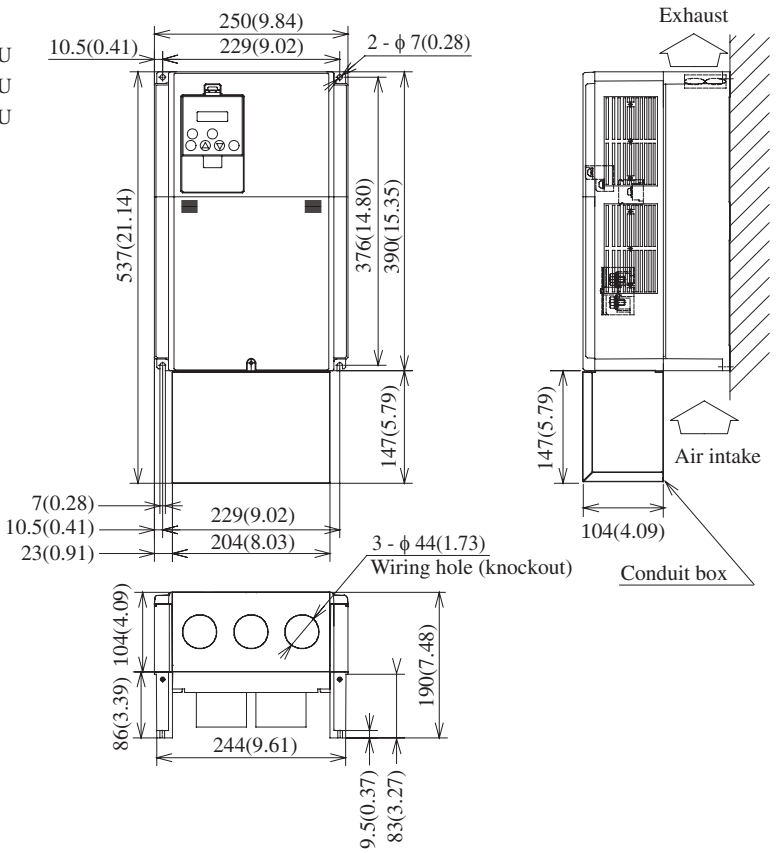

Model

SJ300 -300LFU/HFE, HFU

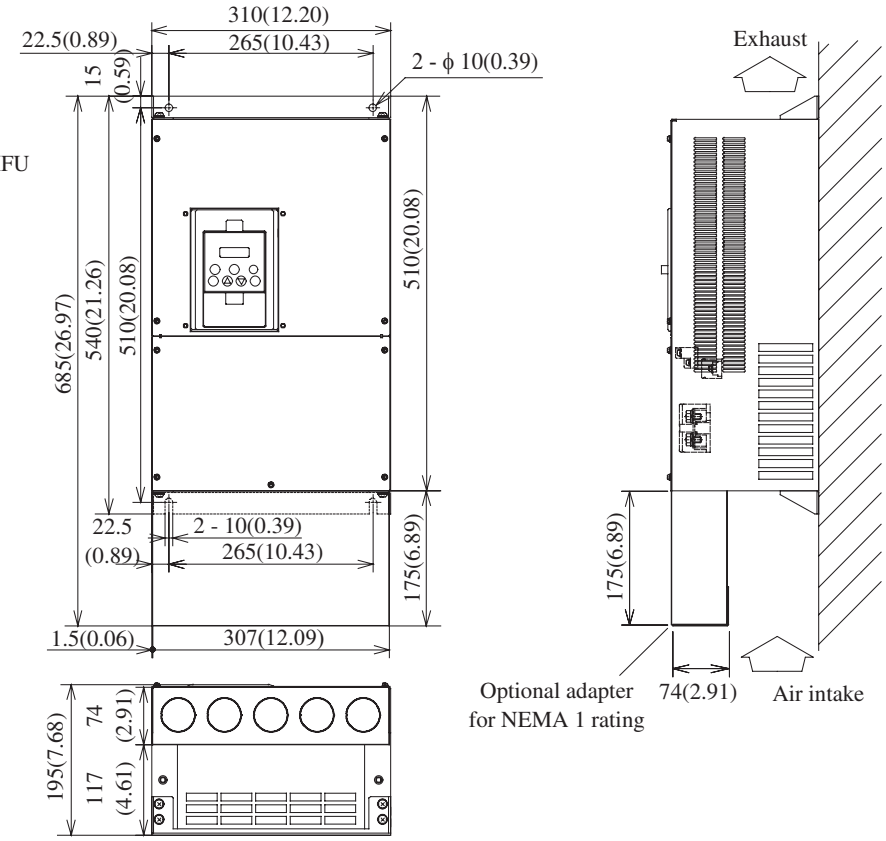

Dimensional drawings, continued...

Model

SJ300 -370LFU/HFE, HFU
-450LFU/HFE, HFU
-550HFE, HFU

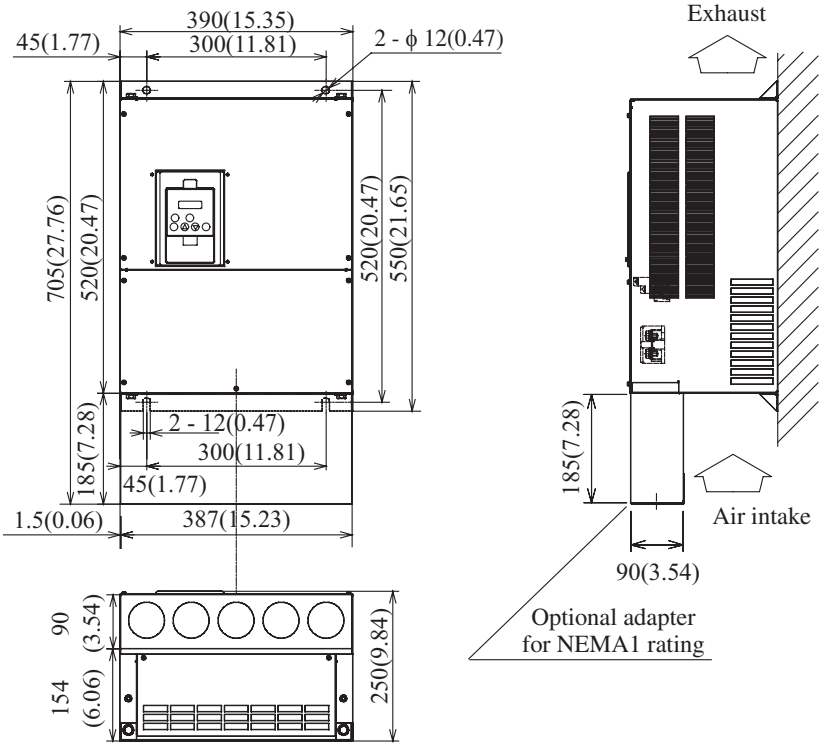

Model

SJ300 -550LFU

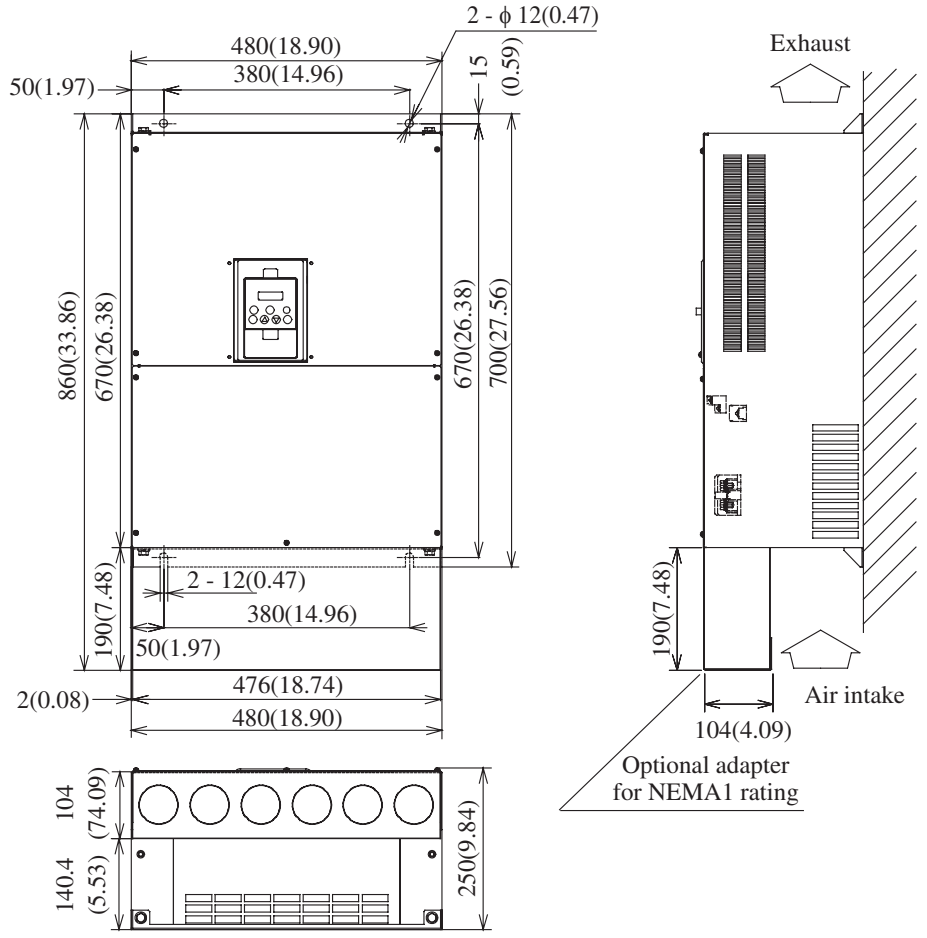

Dimensional drawings, continued...

Model

SJ300 -750HFE, HFU
-900HFE, HFU

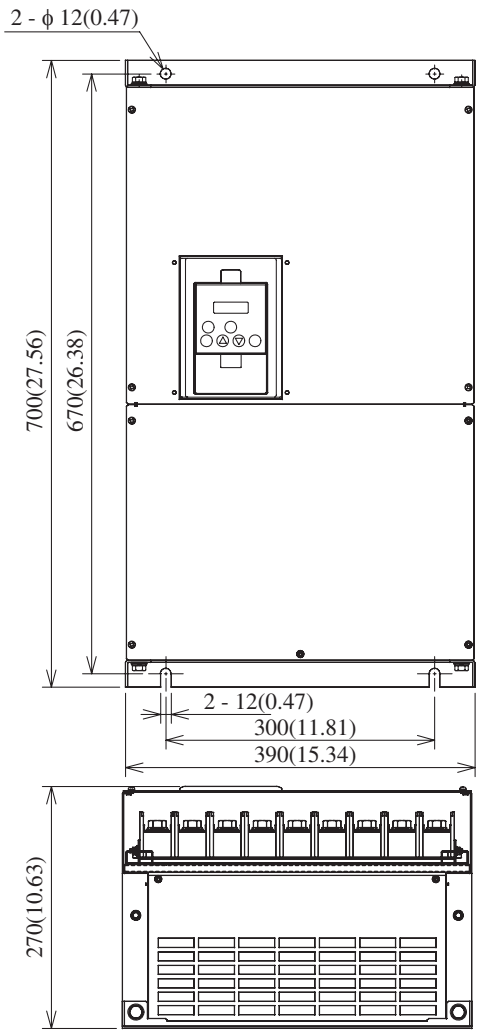

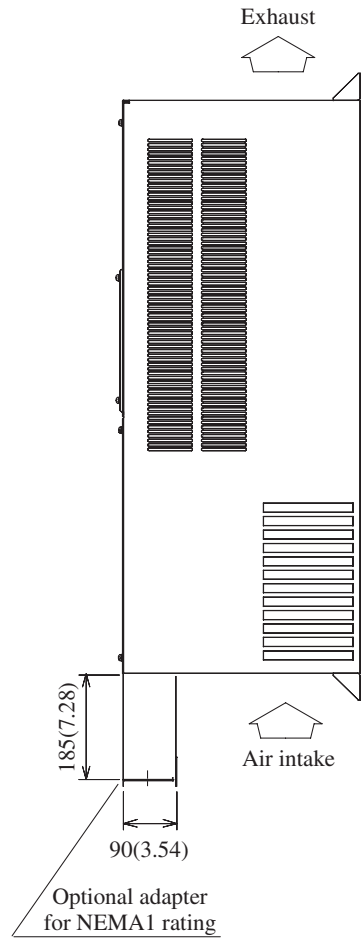

Dimensional drawings, continued...

Model	
SJ300	-1100HFE, HFU
	-1320HFE
	-1500HFU

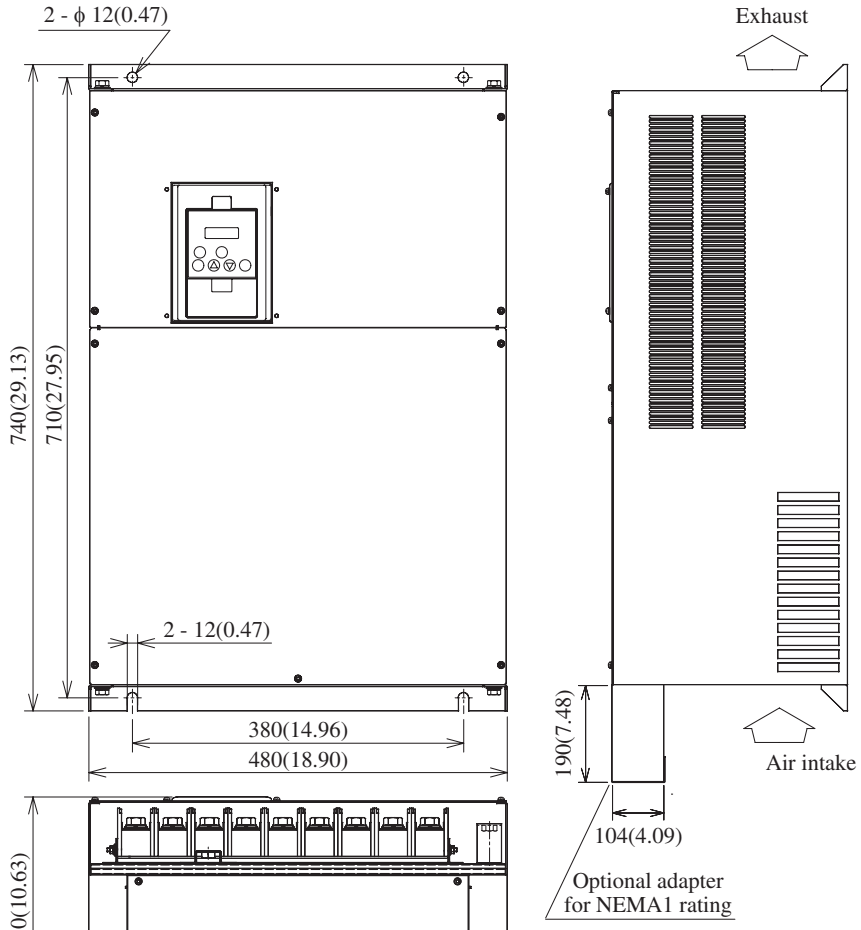

5 Prepare for Wiring

Step 5: The wiring enters the inverter through the entry/exit plate as shown to the right. The rubber grommets have a solid, thin membrane, so that unused ones continue to seal the opening. To create an opening, use a sharp knife and carefully cut an "X" in the center of the grommet as shown. Be especially careful to avoid cutting into the thick outer ring, so that the wiring will have a cushion from contacting the metal plate.

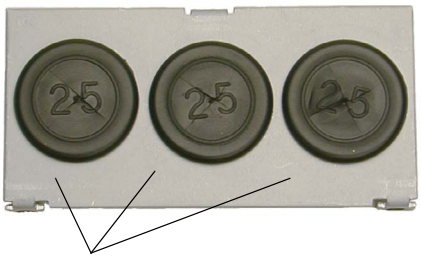

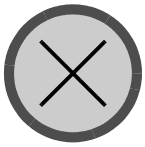

Cut grommet(s) for use as shown

NOTE: Some inverter models will have a wiring box for NEMA rating compliance. Make sure the wire entry to the NEMA box also has protective cushion from chaffing of insulation.

Before proceeding, please study the caution and warning messages below.

WARNING: "Use 60/75°C Cu wire only" or equivalent.

WARNING: "Open Type Equipment." For models SJ300–750H to SJ300–1500H.

WARNING: "A Class 2 circuit wired with Class 1 wire" or equivalent.

WARNING: "Suitable for use on a circuit capable of delivering not more than 100,000 rms symmetrical amperes, 240 V maximum." For models with suffix L.

WARNING: "Suitable for use on a circuit capable of delivering not more than 100,000 rms symmetrical amperes, 480 V maximum." For models with suffix H.

HIGH VOLTAGE: Be sure to ground the unit. Otherwise, there is a danger of electric shock and/or fire.

HIGH VOLTAGE: Wiring work shall be carried out only by qualified personnel. Otherwise, there is a danger of electric shock and/or fire.

HIGH VOLTAGE: Implement wiring after checking that the power supply is OFF. Otherwise, you may incur electric shock and/or fire.

HIGH VOLTAGE: Do not connect wiring to an inverter or operate an inverter that is not mounted according the instructions given in this manual. Otherwise, there is a danger of electric shock and/or injury to personnel.

Determining Wire and Fuse Sizes

This section includes tables for 200V class and 400V class inverters (on the next page). The following notes will help you read the tables in this section:

- Locate the row corresponding to the motor size and particular inverter in your application. The maximum motor current determines the recommended wire sizes.
- The length column specifies that some inverters can optionally use a smaller wire gauge if the wires are shorter than 10m and the inverter is located in an enclosure.
- Power Lines columns include wires connecting to terminals [R, S, T, U, V, W, P, PD, and N]. Only power input and motor leads will be fused: [R, S, T, U, V, and W]. The breaker ratings (GFI—ground fault interrupter) are slightly higher than fuse ratings to allow for nominal surges without tripping.
- The chassis ground columns list the Hitachi-recommended AWG and the minimal AWG for UL conformity.
- The optional external braking resistor wiring only applies to a few models that have a built-in braking unit. The other models use an optional external braking unit.
- Parallel wires increase effective wire gauge, and are denoted by "||" in the tables.
- Signal Lines, not listed in these tables, connect to the removable logic connector. The recommended wire gauge for all wiring to the logic connector is 28 AWG (0.75 mm^2). Be sure to use shielded wire for any analog signals.

Motor Output		200V Inverter Models	Wiring *1								
			Power Lines *3				Chassis Ground			Brake Res.	
HP	kW		AWG	mm^2	Fuse (UL-rated, class J, 600V)	Breaker (GFI type) *2	AWG, rec.	AWG, UL	mm^2	AWG	mm^2
1/2	0.4	SJ300–004LFU	20	1.25	10A	10A	16	14	1.25	20	1.25
1	0.75	SJ300–007LFU	18	1.25	10A	10A	16	14	1.25	18	1.25
2	1.5	SJ300–015LFU	14	2	10A	10A	16	14	1.25	14	2
3	2.2	SJ300–022LFU	14	2	15A	15A	16	14	1.25	14	2
5	3.7	SJ300–037LFU	10	3.5	20A	20A	10	12	3.5	10	3.5
7.5	5.5	SJ300–055LFU	8	5.5	30A	30A	8	10	5.5	8	5.5
10	7.5	SJ300–075LFU	6	8	40A	40A	8	10	8	8	5.5
15	11	SJ300–110LFU	4	14	60A	60A	4	10	14	8	5.5
20	15	SJ300–150LFU	2	22	80A	80A	3	8	22	—	—
25	18.5	SJ300–185LFU	1	14 ‖ 14	100A	100A	3	8	22	—	—
30	22	SJ300–220LFU	1/0	14 ‖ 14	125A	125A	2	8	30	—	—
40	30	SJ300–300LFU	1/0 ‖ 1/0	22 ‖ 22	150A	150A	2	6	30	—	—
50	37	SJ300–370LFU	1/0 ‖ 1/0	30 ‖ 30	175A	175A	1/0	6	38	—	—
60	45	SJ300–450LFU	1/0 ‖ 1/0	38 ‖ 38	225A	225A	3/0	6	38	—	—
75	55	SJ300–550LFU	2/0 ‖ 2/0	60 ‖ 60	250A	250A	3/0	4	60	—	—

* See notes for wiring tables on the following page.

Determining wire and fuse sizes, continued...

Motor Output		400V Inverter Models	Wiring *1								
			Power Lines *3				Chassis Ground			Brake Res.	
HP	kW		AWG	mm^2	Fuse (UL-rated, class J, 600V)	Breaker (GFI type) *2	AWG, rec.	AWG, UL	mm^2	AWG	mm^2
1	0.75	SJ300–007HFU/E	20	1.25	10A	10A	16	14	1.25	20	1.25
2	1.5	SJ300–015HFU/E	18	2	10A	10A	16	14	1.25	18	2
3	2.2	SJ300–022HFU/E	16	2	10A	10A	16	14	1.25	16	2
5	4.0	SJ300–040HFU/E	14	2	15A	15A	16	14	1.25	14	2
7.5	5.5	SJ300–055HFU/E	12	2	15A	15A	14	14	2	12	2
10	7.5	SJ300–075HFU/E	10	3.5	20A	20A	10	12	3.5	10	3.5
15	11	SJ300–110HFU/E	8	5.5	30A	30A	8	10	5.5	8	5.5
20	15	SJ300–150HFU/E	6	8	40A	40A	8	10	8	—	—
25	18.5	SJ300–185HFU/E	6	14	50A	50A	4	10	14	—	—
30	22	SJ300–220HFU/E	4	14	60A	60A	4	10	14	—	—
40	30	SJ300–300HFU/E	3	22	70A	70A	3	10	22	—	—
50	37	SJ300–370HFU/E	1	14 ‖ 14	90A	90A	3	8	22	—	—
60	45	SJ300–450HFU/E	1 AWG (75°C)	38	125A	125A	1	8	22	—	—
75	55	SJ300–550HFU/E	1/0 ‖ 1/0	22 ‖ 22	125A	125A	1	6	30	—	—
100	75	SJ300–750HFU/E	3/0 (1/0 ‖ 1/0 AWG)	30 ‖ 30	175A	175A	1/0	6	50	—	—
125	90	SJ300–900HFU/E	3/0 (1/0 ‖ 1/0 AWG)	38 ‖ 38	200A	200A	3/0	6	80	—	—
150	110	SJ300–1100HFU/E	1/0 ‖ 1/0	50 ‖ 50	250A	250A	3/0	4	80	—	—
175	132	SJ300–1320HFE	3/0 ‖ 3/0	80 ‖ 80	300A	300A	4/0	4	100	—	—
200	150	SJ300–1500HFU	3/0 ‖ 3/0	80 ‖ 80	300A	300A	4/0	4	100	—	—

Note 1: Field wiring must be made by a UL-listed and CSA certified ring lug terminal connector sized for the wire gauge involved. The connector must be fixed by using the crimping tool specified by the connector manufacturer.
Note 2: Be sure to consider the capacity of the circuit breaker to be used.
Note 3: Be sure to use a larger wire gauge if power line length exceeds 66 ft (20m).

Terminal Dimensions and Torque Specs

The following tables list the screw size of terminal and recommended torque for tightening for each of the SJ300 inverter models (400V models are on the next page).



CAUTION: Fasten the screws with the specified fastening torque in the table below. Check for any loosening of screws. Otherwise, there is the danger of fire.

Input Voltage	Motor Output		200V Inverter Models	Screw size of terminal	Ring lug connector *1		Torque	
	HP	kW			(AWG-bolt)	(mm^2–bolt)	ft-lbs	(N-m)
200V	1/2	0.4	SJ300-004LFU	M4	20–#10	1.25–4	1.1	1.5
	1	0.75	SJ300-007LFU	M4	20–#10	1.25–4	1.1	1.5
	2	1.5	SJ300-015LFU	M4	14–#10	2–4	1.1	1.5
	3	2.2	SJ300-022LFU	M4	14–#10	2–4	1.1	1.5
	5	3.7	SJ300-037LFU	M4	10–#10	3.5–4	1.1	1.5
	7.5	5.5	SJ300-055LFU	M5	8–#12	5.5–5	1.8	2.5
	10	7.5	SJ300-075LFU	M5	8–#12	8–5	1.8	2.5
	15	11	SJ300-110LFU	M6	4–1/4	14–6	3.6	4.9
	20	15	SJ300-150LFU	M6	2–1/4	22–6	3.6	4.9
	25	18.5	SJ300-185LFU	M6	1–1/4	30–6	3.6	4.9
	30	22	SJ300-220LFU	M8	1/0–5/16	38–8	6.5	8.8
	40	30	SJ300-300LFU	M8	2–5/16	60–8	6.5	8.8
	50	37	SJ300-370LFU	M8	1–5/16	100–8	6.5	8.8
	60	45	SJ300-450LFU	M10	1/0–1/2	100–10	10.1	13.7
	75	55	SJ300-550LFU	M10	2/0–1/2	150–10	10.1	13.7

Note 1: The recommended ring lug connector listing consists of wire size – screw size format. The wire sizes are in AWG or mm^2 format. For AWG wire sizes, bolt sizes for the ring lug centers are: #10, #12, 1/4", 5/16", and 1/2". For metric wire sizes, bolt sizes for the ring lug centers are: 6 = 6M, 8 = 8M, 10 = 10M.



TIP: AWG = American Wire Gauge. Smaller numbers represent increasing wire thickness.
kcmil = 1,000 circular mils, a measure of wire cross-sectional area
mm^2 = square millimeters, a measure of wire cross-sectional area

Terminal dimensions and torque specs, continued...

Input Voltage	Motor Output		400V Inverter Models	Screw size of terminal	Ring lug connector *1		Torque	
	HP	kW			(AWG-bolt)	(mm^2–bolt)	ft-lbs	(N-m)
400V	1	0.75	SJ300-007HFU/E	M4	20–#10	1.25–4	1.1	1.5
	2	1.5	SJ300-015HFU/E	M4	14–#10	2–4	1.1	1.5
	3	2.2	SJ300-022HFU/E	M4	14–#10	2–4	1.1	1.5
	5	4.0	SJ300-040HFU/E	M4	14–#10	2–4	1.1	1.5
	7.5	5.5	SJ300-055HFU/E	M5	14–#12	2–5	1.8	2.5
	10	7.5	SJ300-075HFU/E	M5	10–#12	3.5–5	1.8	2.5
	15	11	SJ300-110HFU/E	M6	8–1/4	5.5–6	3.6	4.9
	20	15	SJ300-150HFU/E	M6	6–1/4	8–6	3.6	4.9
	25	18.5	SJ300-185HFU/E	M6	4–1/4	14–6	3.6	4.9
	30	22	SJ300-220HFU/E	M6	4–1/4	14–6	3.6	4.9
	40	30	SJ300-300HFU/E	M6	2–1/4	22–6	3.6	4.9
	50	37	SJ300-370HFU/E	M6	1–1/4	38–6	3.6	4.9
	60	45	SJ300-450HFU/E	M8	1/0–5/16	38–8	6.5	8.8
	75	55	SJ300-550HFU/E	M8	2–5/16	60–8	6.5	8.8
	100	75	SJ300-750HFU/E	M8	1–1/2	100–10	6.5	8.8
	125	90	SJ300-900HFU/E	M10	1/0–1/2	100–10	10.1	13.7
	150	110	SJ300-110HFU/E	M10	1/0–1/2	150–10	10.1	13.7
	175	132	SJ300-1320HFE	M10	2/0–1/2	80x2–10	10.1	13.7
	200	150	SJ300-1500HFU	M10	2/0–1/2	80x2–10	10.1	13.7

Note 1: The recommended ring lug connector listing consists of wire size – screw size format. The wire sizes are in AWG or mm^2 format. For AWG wire sizes, bolt sizes for the ring lug centers are: #10, #12, 1/4", 5/16", and 1/2". For metric wire sizes, bolt sizes for the ring lug centers are: 6 = 6M, 8 = 8M, 10 = 10M.

6

Wire the Inverter Input to a Supply

Step 6: In this step, you will connect wiring to the input of the inverter. All models have the same power connector terminals [R(L1)], [S(L2)], and [T(L3)] for three-phase input. The three phases may be connected in any order, as they are isolated from chassis ground and do not determine motor direction of rotation. **Please refer to the specifications label (on the front or side of the inverter) for the acceptable input voltage ranges!**

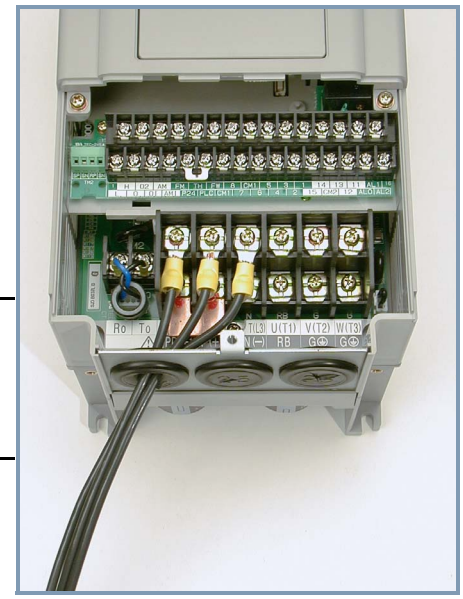

NOTE: The wiring example to the right shows an SJ300-037LFU inverter. The terminal locations will vary, depending on the inverter model (see below). Note the use of ring lug connectors for a secure connection.

Please use the terminal arrangement below corresponding to your inverter model.

–004LFU, –007 to –055LFU/ HFE, HFU

R (L1)	S (L2)	T (L3)	U (T1)	V (T2)	W (T3)
PD (+1)	P (+)	N (–)	RB (RB)	⏚ (G)	⏚ (G)

R0 (R0)	T0 (T0)

Jumper bar

–075LFU/HFE, HFU
–110LFU/HFE, HFU

R (L1)	S (L2)	T (L3)	U (T1)	V (T2)	W (T3)
PD (+1)	P (+)	N (–)	RB (RB)	⏚ (G)	⏚ (G)

R0 (R0)	T0 (T0)

Jumper bar

–150LFU, 185LFU, –300LFU, –370LFU,
–150 to –550HFE, HFU

R0 (R0)	T0 (T0)

⏚ (G)	R (L1)	S (L2)	T (L3)	PD (+1)	P (+)	N (–)	U (T1)	V (T2)	W (T3)	⏚ (G)

Jumper bar

–220LFU, –450LFU, –550LFU,
–750 to –1100HFE, HFU
–1320HFE, –1500HFU

R0 (R0)	T0 (T0)

R (L1)	S (L2)	T (L3)	PD (+1)	P (+)	N (–)	U (T1)	V (T2)	W (T3)

Jumper bar

⏚ (G) ⏚ (G)

NOTE: An inverter powered by a portable or emergency diesel power generator may result in a distorted power waveform, overheating the generator. In general, the generator capacity should be at least five times that of the inverter (kVA).

CAUTION: Be sure that the input voltage matches the inverter specifications:
- Three phase 200 to 240V 50/60Hz
- Three phase 380 to 480V 50/60Hz

CAUTION: Be sure not to power a three-phase-only inverter with single phase power. Otherwise, there is the possibility of damage to the inverter and the danger of fire.

CAUTION: Be sure not to connect an AC power supply to the output terminals. Otherwise, there is the possibility of damage to the inverter and the danger of injury and/or fire.

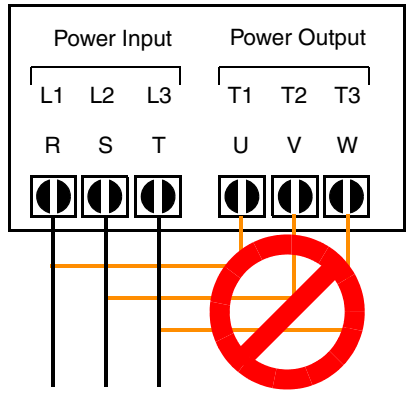

NOTE:

L1, L2, L3:

Three-phase 200 to 240V 50/60 Hz
Three-phase 380 to 480V 50/60 Hz

CAUTION: Remarks for using ground fault interrupter breakers in the main power supply: Adjustable frequency inverters with CE-filters (RFI-filter) and shielded (screened) motor cables have a higher leakage current toward Earth GND. Especially at the moment of switching ON this can cause an inadvertent trip of ground fault interrupter breakers. Because of the rectifier on the input side of the inverter there is the possibility to stall the switch-off function through small amounts of DC current. Please observe the following:
- Use only short time-invariant and pulse current-sensitive ground fault interrupter breakers with higher trigger current.
- Other components should be secured with separate ground fault interrupter breakers.
- Ground fault interrupter breakers in the power input wiring of an inverter are not an absolute protection against electric shock.

CAUTION: Be sure to install a fuse in each phase of the main power supply to the inverter. Otherwise, there is the danger of fire.

CAUTION: For motor leads, ground fault interrupter breakers and electromagnetic contactors, be sure to size these components properly (each must have the capacity for rated current and voltage). Otherwise, there is the danger of fire.

7

Wire the Inverter Output to Motor

Step 7: The process of motor selection is beyond the scope of this manual. However, it must be a three-phase AC induction motor. It should also come with a chassis ground lug. If the motor does not have three power input leads, stop the installation and verify the motor type. Other guidelines for wiring the motor include:

- Use an inverter-grade motor for maximum motor life (1600V insulation).
- For standard motors, use an output filter if the wiring between the inverter and motor exceeds 10 meters in length.

Simply connect the motor to the terminals [U/T1], [V/T2], and [W/T3] indicated on the inverter to the right. This is a good time to connect the chassis ground lug on the drive as well. The motor chassis ground must also connect to the same point. Use a star ground (single-point) arrangement, and never daisy-chain the grounds (point-to-point).

Use the same wire gauge on the motor and chassis ground wiring as you used on the power input wiring in the previous step. After completing the wiring:

- Check the mechanical integrity of each wire crimp and terminal connection.
- Replace the front panel and secure the retention screw firmly.

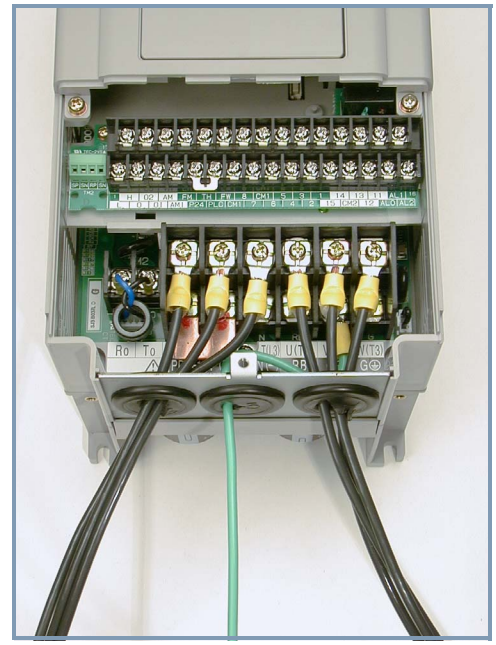

To Power Source | To Chassis Ground | To Motor

Logic Control Wiring

After completing the initial installation and powerup test in this chapter, you may need to wire the logic signal connector for your application. For new inverter users/applications, we highly recommend that you first complete the powerup test in this chapter without adding any logic control wiring. Then you will be ready to set the required parameters for logic control as covered in Chapter 4, Operations and Monitoring.

8

Uncover the Inverter Vents

Step 8: After mounting and wiring the inverter, remove any protective material covering the inverter ventilation openings from Step 3. This includes covers over the side ventilation ports as well as the fan outlet area.

CAUTION: Failure to remove all vent opening covers before electrical operation may result in damage to the inverter.

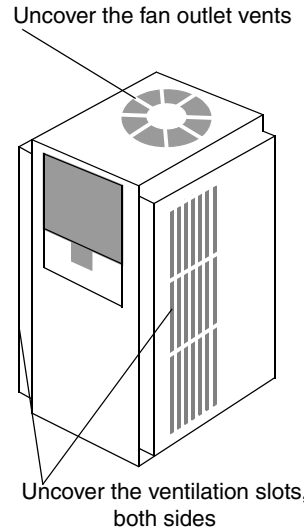

Powerup Test



Perform the Powerup Test

Step 9: After wiring the inverter and motor, you're ready to do a powerup test. The procedure that follows is designed for the first-time use of the drive. Please verify the following conditions before conducting the powerup test:

- You have followed all the steps in this chapter up to this step.
- The inverter is new, and is securely mounted to a non-flammable vertical surface
- The inverter is connected to a power source and motor.
- No additional wiring of inverter connectors or terminals has been done.
- The power supply is reliable, and the motor is a known working unit, and the motor nameplate ratings match the inverter ratings.
- The motor is securely mounted, and is not connected to any load.

Goals for the Powerup Test

If there are any exceptions to the above conditions at this step, please take a moment to take any measures necessary to reach this basic starting point. The specific goals of this powerup test are:

1. Verify that the wiring to the power supply and motor is correct.
2. Demonstrate that the inverter and motor are generally compatible.
3. Give a brief introduction to the use of the built-in operator keypad.

The powerup test gives you an important starting point to ensure a safe and successful application of the Hitachi inverter. We highly recommend performing this test before proceeding to the other chapters in this manual.

Pre-test and Operational Precautions

The following instructions apply to the powerup test, or to any time the inverter is powered and operating. Please study the following instructions and messages before proceeding with the powerup test.

1. The power supply must have fusing suitable for the load. Check the fuse size chart presented in Step 5, if necessary.
2. Be sure you have access to a disconnect switch for the drive input power if necessary. However, do not turn OFF power to the inverter during its operation unless it is an emergency.
3. Turn the inverter's front panel potentiometer (if it exists) to the *MIN* position (fully counter-clockwise).



CAUTION: The heat sink fins will have a high temperature. Be careful not to touch them. Otherwise, there is the danger of getting burned.



CAUTION: The operation of the inverter can be easily changed from low speed to high speed. Be sure to check the capability and limitations of the motor and machine before operating the inverter. Otherwise, there is the danger of injury.



CAUTION: If you operate a motor at a frequency higher than the inverter standard default setting (50Hz/60Hz), be sure to check the motor and machine specifications with the respective manufacturer. Only operate the motor at elevated frequencies after getting their approval. Otherwise, there is the danger of equipment damage and/or injury to personnel.



CAUTION: Check the following before and during the powerup test. Otherwise, there is the danger of equipment damage.

- Is the shorting bar between the [P] and [PD] terminals installed? DO NOT power or operate the inverter if the jumper is removed.
- Is the direction of the motor rotation correct?
- Did the inverter trip during acceleration or deceleration?
- Were the rpm and frequency meter readings as expected?
- Were there any abnormal motor vibrations or noise?

Powering the Inverter

If you have followed all the steps, cautions and warnings up to this point, you're ready to apply power. After doing so, the following events should occur:

- The *POWER* LED will illuminate.
- The numeric (7-segment) LEDs will display a test pattern, then stop at 0.0.
- The *Hz* LED will be ON.

If the motor starts running unexpectedly or any other problem occurs, press the *STOP* key. Only if necessary should you remove power to the inverter as a remedy.



NOTE: If the inverter has been previously powered and programmed, the LEDs (other than the POWER LED) may illuminate differently than as indicated above. If necessary, you can initialize all parameters to the factory default settings. See "Restoring Factory Default Settings" on page 6–9.

Using the Front Panel Keypad

Front Panel Introduction

Please take a moment to familiarize yourself with the keypad layout shown in the figure below.

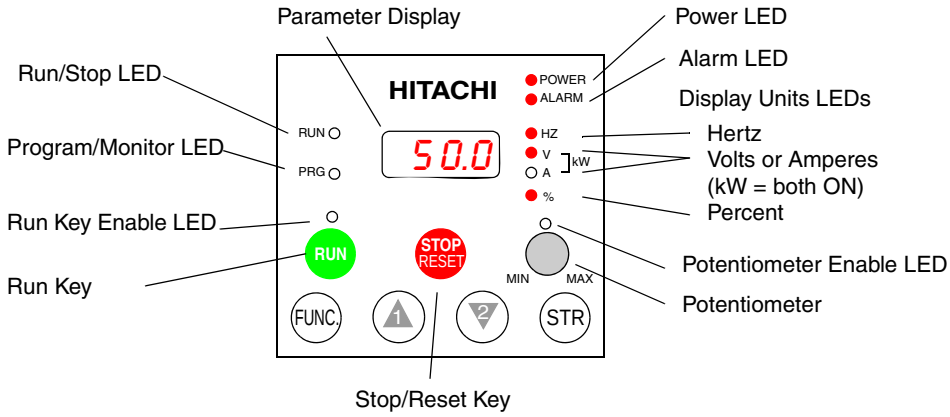

The display is used in programming the inverter's parameters, as well as monitoring specific parameter values during operation. Many functions are applicable only during the initial installation, while others are more useful for maintenance or monitoring.

Parameter Editing and Controls

The front panel controls and indicators are described as follows:

- **Run/Stop LED** – ON when the inverter output is ON and the motor is developing torque, and OFF when the inverter output is OFF (Stop Mode).
- **Program/Monitor LED** – This LED is ON when the inverter is ready for parameter editing (Program Mode). It is normally OFF when the parameter display is monitoring data (Monitor Mode). However, the PRG LED will be ON whenever you are monitoring the value of parameter D001. (When the keypad is enabled as the frequency source via A001=02, you can edit the inverter frequency directly from D001 monitor display by using the Up/Down keys.)
- **Run Key Enable LED** – is ON when the inverter is ready to respond to the Run key, OFF when the Run key is disabled.
- **Run Key** – Press this key to run the motor (the Run Enable LED must be ON first). Parameter F004, Keypad Run Key Routing, determines whether the Run key generates a Run FWD or Run REV command.
- **Stop/Reset Key** – Press this key to stop the motor when it is running (uses the programmed deceleration rate). This key will also reset an alarm that has tripped.
- **Potentiometer** (OPE–SRE only) – allows an operator to directly set the motor speed when the potentiometer is enabled for output frequency control.
- **Potentiometer Enable LED** – ON when the potentiometer is enabled for value entry. (OPE–SRE only).
- **Parameter Display** – a 4-digit, 7-segment display for parameters and function codes.
- **Display Units: Hertz/Volts/Amperes**/kW/% – These LEDs indicate the units associated with the parameter display. When the display is monitoring a parameter, the appropriate LED is ON. In the case of kW units, both Volts and Amperes LEDs will be ON. An easy way to remember this is that kW = (V x A)/1000.
- **Power LED** – This LED is ON when the power input to the inverter is ON.
- **Alarm LED** – This LED is ON when an alarm condition has tripped the inverter. Clearing the alarm will turn this LED OFF again. See Chapter 6 for details on clearing alarms.

- **Function Key** – This key is used to navigate through the lists of parameters and functions for setting and monitoring parameter values.
- **Up/Down (▲1, ▼2) Keys** – Use these keys alternately to move up or down the lists of parameter and functions shown in the display, and increment/decrement values.
- **Store (STR) Key** – When the unit is in Program Mode and the operator has edited a parameter value, press the Store key to write the new value to the EEPROM. This parameter is then displayed at powerup by default. If you want to change the powerup default, navigate to a new parameter value and press the Store key.

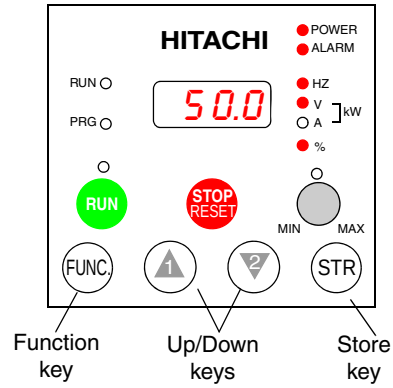

Keys, Modes, and Parameters

Purpose of the keypad is to provide a way to change modes and parameters. The term *function* applies to both monitoring modes and parameters. These are all accessible through *function codes* that are primarily 3 or 4-character codes. The various functions are separated into related groups identifiable by the left-most character, as the table shows.

Function Group	Type (Category) of Function	Mode to Access	PGM LED Indicator
"D"	Monitoring functions	Monitor	○ or ●
"F"	Main profile parameters	Program	●
"A"	Standard functions	Program	●
"B"	Fine tuning functions	Program	●
"C"	Intelligent terminal functions	Program	●
"H"	Motor constant functions	Program	●
"P"	Expansion card functions	Program	●
"U"	User-selectable menu functions	Monitor	○
"E"	Error codes	—	—

For example, function "A004" is the *base frequency setting* for the motor, typically 50 Hz or 60 Hz. To edit the parameter, the inverter must be in Program Mode (PGM LED will be ON). You use the front panel keys to first select the function code "A004." After displaying the value for "A004," use the Up/Down (▲1 or ▼2) keys to edit the value.

NOTE: The inverter 7-segment display shows lower case "b" and "d", meaning the same as the upper case letters "B" and "D" used in this manual (for uniformity "A to F").

The inverter automatically switches into Monitor Mode when you access "D" Group functions. It switches into Program Mode when you access any other group, because they all have editable parameters. Error codes use the "E" Group, and appear automatically when a fault event occurs. Refer to "Monitoring Trip Events, History, & Conditions" on page 6–5 for error code details.

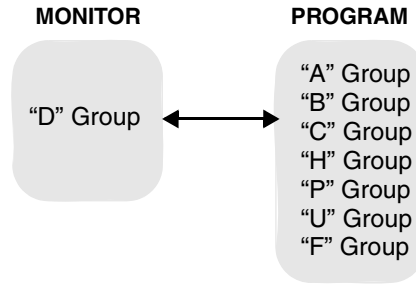

Keypad Navigational Map

The SJ300 Series inverter drives have many programmable functions and parameters. Chapter 3 will cover these in detail, but you need to access just a few items to perform the powerup test. The menu structure makes use of function codes and parameter codes to allow programming and monitoring with only a 4-digit display and a few keys and LEDs. So, it is important to become familiar with the basic navigational map of parameters and functions in the diagram below. You can later use this map as a reference.

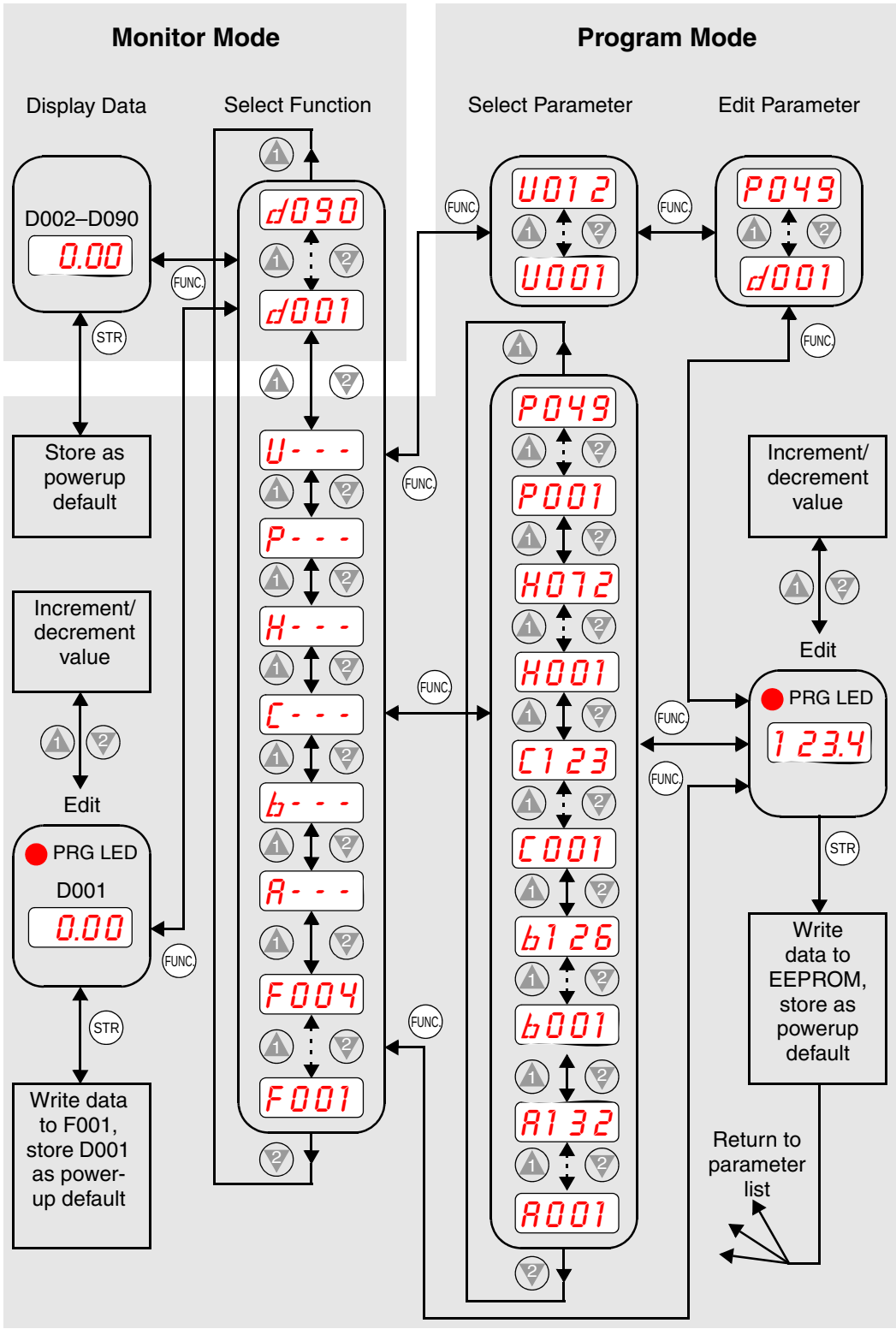

Selecting Functions and Editing Parameters

In order to run the motor for the powerup test, this section will show how to:

- select the inverter's maximum output frequency to the motor
- select the keypad potentiometer as the source of motor speed command
- select the keypad as the source of the RUN command
- set the number of poles for the motor
- enable the RUN command

The following series of programming tables are designed for successive use. Each table uses the previous table's final state as the starting point. Therefore, start with the first and continue programming until the last one. If you get lost or concerned that some of the other parameters settings may be incorrect, refer to "Restoring Factory Default Settings" on page 6–9.



CAUTION: If you operate a motor at a frequency higher than the inverter standard default setting (50Hz/60Hz), be sure to check the motor and machine specifications with the respective manufacturer. Only operate the motor at elevated frequencies after getting their approval. Otherwise, there is the danger of equipment damage.

Setting the Motor Base Frequency -The motor is designed to operate at a specific AC frequency. Most commercial motors are designed for 50/60 Hz operation. First, check the motor specifications. Then follow the steps in the table below to verify the setting or correct for your motor. DO NOT set it for greater than 50/60 Hz unless the motor manufacturer specifically approves operation at the higher frequency.

Action	Display	Func./Parameter
Press the FUNC. key.	d001	Monitor functions
Press the 1 or 2 keys until ->	A- - -	"A" Group selected
Press the FUNC. key.	A001	First "A" parameter
Press the 1 key twice.	A003	Base frequency setting
Press the FUNC. key.	60 or 50	Default value for base frequency US = 60 Hz, Europe = 50 Hz
Press the 1 or 2 key as needed.	60	Set to your motor specs (your display may be different)
Press the STR key.	A003	Stores parameter, returns to "A" Group list



TIP: If you need to scroll through a function or parameter list, press and hold the 1 or 2 key to auto-increment through the list.

Select the Potentiometer for Speed Command - The motor speed may be controlled from the following sources:

- Potentiometer on front panel keypad (if present)
- Control terminals
- Remote panel

Then follow the steps in the table below to select the potentiometer for the speed command (the table resumes action from the end of the previous table).

Action	Display	Func./Parameter
Press the ▼2 key twice.	A001	Speed command source setting
Press the FUNC. key.	01	0 = potentiometer 1 = control terminals (default) 2 = keypad
Press the ▼2 key.	00	0 = potentiometer (selected)
Press the STR key.	A001	Stores parameter, returns to “A” Group list

Select the Keypad for the RUN Command - The RUN command causes the inverter to accelerate the motor to the selected speed. You can program the inverter to respond to either the control terminal signal or the keypad RUN key. Follow the steps in the table below to select the front panel RUN key as the source for the RUN Command (the table resumes action from the end of the previous table).

Action	Display	Func./Parameter
Press the ▲1 key.	A002	Run command source
Press the FUNC. key.	01	1 = control terminals (default) 2 = keypad
Press the ▲1 key.	02	2 = keypad (selected)
Press the STR key.	A002	Stores parameter, returns to “A” Group list



NOTE: When you press the STR key in the last step above (and the display = 02), the Run Enable LED above the RUN switch on the keypad will turn ON. This is normal, and does not mean the motor is trying to run. It means that the RUN key is now enabled.
DO NOT press the RUN key at this time—finish out the programming exercise first.

Configure the Inverter for the Number of Motor Poles- The number of magnetic poles of a motor is determined by the motor's internal winding arrangement. The specifications label on the motor usually indicates its number of poles. For proper operation, verify the parameter setting matches the motor poles. Many industrial motors have four poles, corresponding to the default setting in the inverter.

Follow the steps in the table below to verify the motor poles setting and change it if necessary (the table resumes action from the end of the previous table.)

Action	Display	Func./Parameter
Press the FUNC. key.	A- - -	"A" Group selected
Press the ↑1 key three times.	H- - -	"H" Group selected
Press the FUNC. key.	H001	First "H" parameter
Press the ↑1 key five times.	H004	Motor poles parameter
Press the FUNC. key.	4	2 = 2 poles 4 = 4 poles (default) 6 = 6 poles 8 = 8 poles
Press the ↑1 or ↓2 key as needed.	4	Set to match your motor (your display may be different)
Press the STR key.	H004	Stores parameter, returns to "H" Group list

This step concludes the parameter setups for the inverter. You are almost ready to run the motor for the first time!



TIP: If you became lost during any of these steps, first observe the state of the PRG LED. Then study the "Keypad Navigational Map" on page 2–25 to determine the current state of the keypad controls and display. As long as you do not press the STR key, no parameters will be changed by keypad entry errors. Note that power cycling the inverter will not cause it to reset to a particular programming state.

The next section will show you how to monitor a particular parameter from the display. Then you will be ready to run the motor.

Monitoring Parameters with the Display

After using the keypad for parameter editing, it's a good idea to switch the inverter from Program Mode to Monitor Mode. This will turn out the PRG LED, and the Hertz, Volt, Ampere, or % LED indicates the display units.

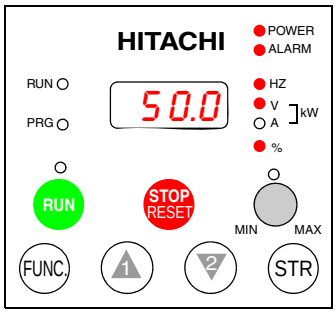

For the powerup test, monitor the motor speed indirectly by viewing the inverter's output frequency. The *output frequency* must not be confused with *base frequency* (50/60 Hz) of the motor, or the *carrier frequency* (switching frequency of the inverter, in the kHz range). The monitoring functions are in the "D" list, located near the top left of the diagram in the "Keypad Navigational Map" on page 2–25.

Output frequency (speed) monitor - Resuming the keypad programming from the previous table, follow the steps in the table below.

Action	Display	Func./Parameter
Press the FUNC. key.	H - - -	"H" Group selected
Press the 1 key.	d001	Output frequency selected
Press the FUNC. key.	0.00	Output frequency displayed

When the d001 function code appeared, the PRG LED went OFF. This confirms the inverter is no longer in programming mode, even while you are selecting the particular monitoring parameter. After pressing the FUNC. key, the display shows the current speed (is zero at this point).

Running the Motor

If you have programmed all the parameters up to this point, you're ready to run the motor! First, review this checklist:

1. Verify the Power LED is ON. If not, check the power connections.
2. Verify the Run Key Enable LED is ON. If not, review the programming steps to find the problem.
3. Verify the PRG LED is OFF. If it is ON, review the instructions above.
4. Make sure the motor is disconnected from any mechanical load.
5. Turn the potentiometer to the MIN position (completely counterclockwise).
6. Now, press the RUN key on the keypad. The RUN LED will turn ON.
7. Slowly increase the potentiometer setting in clockwise fashion. The motor should start turning when the indicator is in the 9:00 position and beyond.
8. Press the STOP key to stop the motor rotation.



Powerup Test Observations and Summary

Step 10: Reading this section will help you make some useful observations when first running the motor.

Error Codes - If the inverter displays an error code (LED format is "EXX"), see "Monitoring Trip Events, History, & Conditions" on page 6–5 to interpret and clear the error.

Acceleration and Deceleration - The SJ300 inverter has programmable acceleration and deceleration values. The test procedure left these at the default value, 10 seconds. You can observe this by setting the potentiometer at about half speed before running the motor. Then press RUN, and the motor will take 5 seconds to reach a steady speed. Press the STOP key to see a 5 second deceleration to a stop.

State of Inverter at Stop - If you adjust the motor's speed to zero, the motor will slow to a near stop, and the inverter turns the outputs OFF. The high-performance SJ300 can rotate at a very slow speed with high torque output, but not zero (must use servo systems with position feedback for that feature). This characteristic means you must use a mechanical brake for some applications.

Interpreting the Display - First, refer to the output frequency display readout. The maximum frequency setting (parameter A004) defaults to 50 Hz or 60 Hz (Europe and United States, respectively) for your application.

Example: Suppose a 4-pole motor is rated for 60 Hz operation, so the inverter is configured to output 60 Hz at full scale. Use the following formula to calculate the RPM.

$$\text{RPM} = \frac{Frequency \times 60}{\text{Pairs of poles}} = \frac{Frequency \times 120}{\text{\# of poles}} = \frac{60 \times 120}{4} = 1800\,\text{RPM}$$

The theoretical speed for the motor is 1800 RPM (synchronous speed). However, an induction motor cannot generate torque unless its shaft turns at a slightly different speed. This difference is called *slip*. So it's common to see a rated speed of approximately 1750 RPM on a 60 Hz, 4-pole motor. Using a tachometer to measure shaft speed, you can see the difference between the inverter output frequency and the actual motor speed. The slip increases slightly as the motor's load increases. This is why the inverter output value is called "frequency," since it is not exactly equal to motor speed. You can program the inverter to display output frequency in units more directly related to the load speed by entering a constant (discussed more in depth on page 3–41).

Run/Stop Versus Monitor/Program Modes – The Run LED on the inverter is ON in Run Mode, and OFF in Stop Mode. The Program LED is ON when the inverter is in Program Mode, and OFF for Monitor Mode. All four mode combinations are possible. The diagram to the right depicts the modes and the mode transitions via keypad.

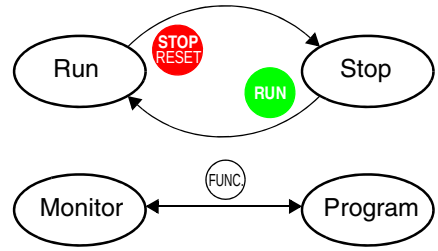



NOTE: Some factory automation devices such as PLCs have alternate Run/Program modes; the device is in either one mode or the other. In the Hitachi inverter, however, Run Mode alternates with Stop Mode, and Program Mode alternates with Monitor Mode. This arrangement lets you program some values while the inverter is operating—providing flexibility for maintenance personnel.

Configuring Drive Parameters

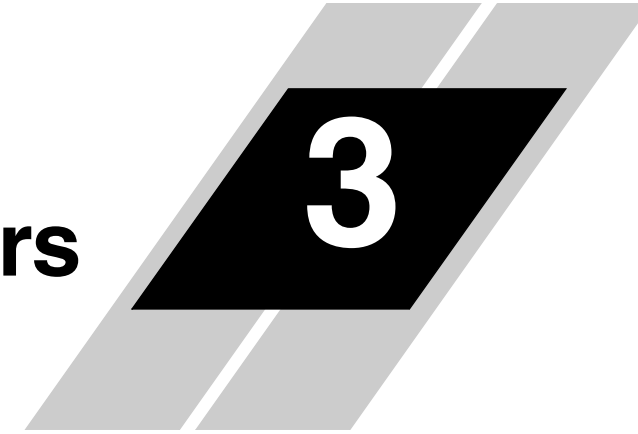

In This Chapter.... page

— Choosing a Programming Device 2
— Using Keypad Devices 3
— “D” Group: Monitoring Functions 6
— “F” Group: Main Profile Parameters 8
— “A” Group: Standard Functions 9
— “B” Group: Fine-Tuning Functions 29
— “C” Group: Intelligent Terminal Functions 47
— “H” Group: Motor Constants Functions 62
— “P” Group: Expansion Card Functions 65
— “U” Group: User-selectable Menu Functions 67
— Programming Error Codes 68

Choosing a Programming Device

Introduction

Hitachi variable frequency drives (inverters) use the latest electronics technology for getting the right AC waveform to the motor at the right time. The benefits are many, including energy savings and higher machine output or productivity. The flexibility required to handle a broad range of applications has required ever more configurable options and parameters—inverters are now a complex industrial automation component. And this can make a product seem difficult to use, but the goal of this chapter is to make this easier for you.

As the powerup test in Chapter 2 demonstrated, you do not have to program very many parameters to run the motor. In fact, most applications would benefit only from programming just a few, specific parameters. This chapter will explain the purpose of each set of parameters, and help you choose the ones that are important to your application.

If you are developing a new application for the inverter and a motor, finding the right parameters to change is mostly an exercise in optimization. Therefore, it is okay to begin running the motor with a loosely tuned system. By making specific, individual changes and observing their effects, you can achieve a finely tuned system. And, the SJ300 Series inverters have a built-in auto-tuning algorithm to set certain motor parameters.

Inverter Programming Keypads

The front panel keypad is the first and best way to get to know the inverter's capabilities. Every function or programmable parameter is accessible from the keypad. All keypads have the same basic layout, but with different features. The OPE–SRE has a potentiometer knob for frequency setting input. The SRW–0EX Read/write Copy Unit has the ability to upload (copy) or download (write) all inverter parameter data to/from memory in the copy unit itself. This unit is useful in transferring one inverter's settings to another.

The following table shows various programming options, the features unique to each device, and the cables required.

Device	Part Number	Parameter Access	Parameter setting storage	Cables (for optional external mounting)	
				Part number	Length
Inverter keypad, U.S. version	OPE–SRE	Monitor and program	EEPROM in inverter	ICS–1	1 meter
				ICS–3	3 meters
Inverter keypad, European version	OPE–S	Monitor and program	EEPROM in inverter	Use same two cables as above	
Read/write Copy Unit with Keypad	SRW–0EX	Monitor and program; read or write all data	EEPROM in inverter or in copy unit	Use same two cables as above	



TIP: Other special-purpose keypads are available, such as ones to serve the needs of the HVAC market (heating, ventilating & air conditioning). Please contact your Hitachi distributor for details.

Using Keypad Devices

Inverter Front Panel Keypad

The SJ300 Series inverter front keypad contains all the elements for both monitoring and programming parameters. The keypad layout (OPE–SRE) is shown below. All other programming devices for the inverter have a similar key arrangement and function.

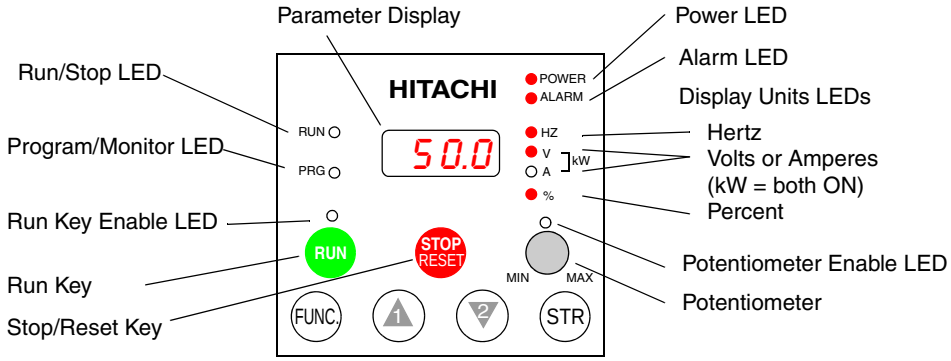

Key and Indicator Legend

- **Run/Stop LED** – ON when the inverter output is ON and the motor is developing torque, and OFF when the inverter output is OFF (Stop Mode).
- **Program/Monitor LED** – This LED is ON when the inverter is ready for parameter editing (Program Mode). It is normally OFF when the parameter display is monitoring data (Monitor Mode). However, the PRG LED will be ON whenever you are monitoring the value of parameter D001. (When the keypad is enabled as the frequency source via A001=02, you can edit the inverter frequency directly from D001 monitor display by using the Up/Down keys.)
- **Run Key** – Press this key to run the motor (the Run Enable LED must be ON first). Parameter F004, Keypad Run Key Routing, determines whether the Run key generates a Run FWD or Run REV command.
- **Run Key Enable LED** – is ON when the inverter is ready to respond to the Run key, OFF when the Run key is disabled.
- **Stop/Reset Key** – Press this key to stop the motor when it is running (uses the programmed deceleration rate). This key will also reset an alarm that has tripped.
- **Potentiometer** (OPE–SRE only) – allows an operator to directly set the motor speed when the potentiometer is enabled for output frequency control
- **Potentiometer Enable LED** – ON when the potentiometer is enabled for value entry (OPE–SRE only).
- **Parameter Display** – a 4-digit, 7-segment display for parameters and function codes.
- **Display Units: Hertz/Volts/Amperes**/kW/% - These LEDs indicate the units associated with the parameter display. When the display is monitoring a parameter, the appropriate LED is ON. In the case of kW units, both Volts and Amperes LEDs will be ON. An easy way to remember this is that kW = (V x A)/1000.
- **Power LED** – This LED is ON when the power input to the inverter is ON.
- **Alarm LED** – This LED is ON when an alarm condition has tripped the inverter. Clearing the alarm will turn this LED OFF again. See Chapter 6 for details on clearing alarms.
- **Function Key** – This key is used to navigate through the lists of parameters and functions for setting and monitoring parameter values.
- **Up/Down (1, 2) Keys** – Use these keys to alternately move up or down the lists of parameter and functions shown in the display, and increment/decrement values.
- **Store (STR) Key** – When the unit is in Program Mode and the operator has edited a parameter value, press the Store key to write the new value to the EEPROM. This parameter is then displayed at powerup by default. If you want to change the powerup default, navigate to a new parameter value and press the Store key.

Keypad Navigational Map

Whether you use the keypad on the inverter or the read-write copy unit, each navigates the same way. The diagram below shows the basic navigational map of parameters and functions.

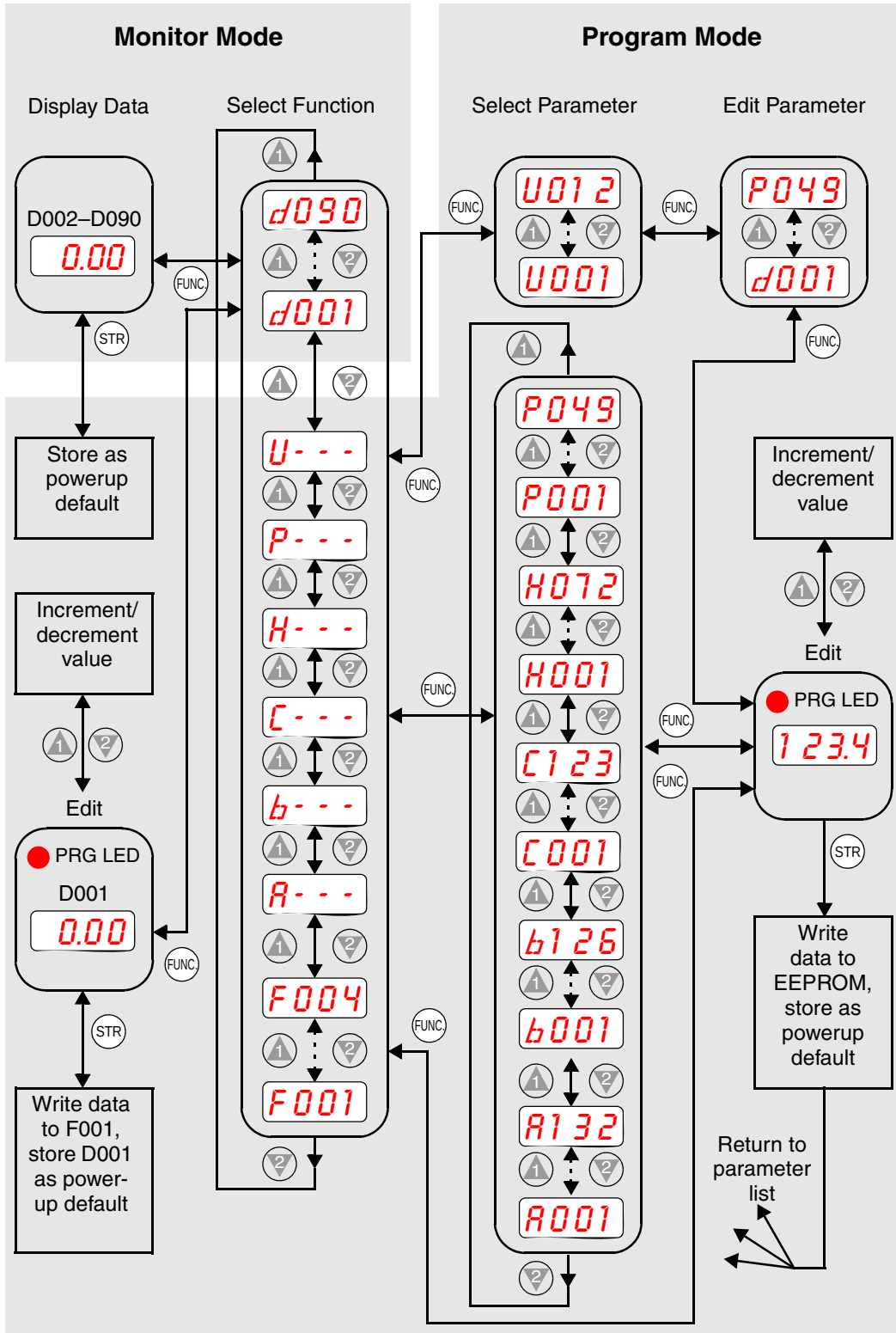

NOTE: The inverter 7-segment display shows lower case “b” and “d”, meaning the same as the upper case letters “B” and “D” used in this manual (for uniformity “A to F”).

Operational Modes

The RUN and PGM LEDs tell just part of the story; Run Mode and Program Modes are independent modes, not opposite modes. In the state diagram to the right, Run alternates with Stop, and Program Mode alternates with Monitor Mode. This is a very important ability, for it shows that a technician can approach a running machine and change some parameters without shutting down the machine.

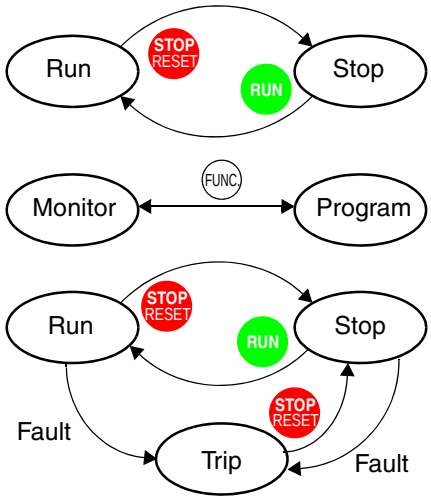

The occurrence of a fault during operation will cause the inverter to enter the Trip Mode as shown. An event such as an output overload will cause the inverter to exit the Run Mode and turn OFF its output to the motor. In the Trip Mode, any request to run the motor is ignored. You must clear the error by pressing the Stop/Reset switch. See "Monitoring Trip Events, History, & Conditions" on page 6–5.

Run Mode Edits

The inverter can be in Run Mode (inverter output is controlling motor) and still allow you to edit certain parameters. This is useful in applications that must run continuously, yet need some inverter parameter adjustment.

The parameter tables in this chapter have a column titled "Run Mode Edit." An Ex mark ✘ means the parameter cannot be edited; a Check mark ✔ means the parameter can be edited. You'll notice in the table example to the right the two adjacent marks: "✘ ✔". The two marks (that can also be "✘ ✘" or "✔ ✔") correspond to these levels of access to editing:

	Run Mode Edit Lo Hi	
	✘ ✔	

- Low-access level to Run Mode edits (indicated by *left-most* mark)
- High-access level to Run Mode edits (indicated by *right-most* mark)

The Software Lock Setting (parameter B031) determines the particular access level that is in effect during Run Mode and access in other conditions, as well. It is the responsibility of the user to choose a useful and safe software lock setting for the inverter operating conditions and personnel. Please refer to "Software Lock Mode" on page 3–36 for more information.

Control Algorithms

The motor control program in the SJ300 inverter has several sinusoidal PWM switching algorithms. The intent is that you select the best algorithm for the motor characteristics in your application. Each algorithm generates the frequency output in a unique way. Once configured, the algorithm is the basis for other parameter settings as well (see "Torque Control Algorithms" on page 3–14). Therefore, choose the best algorithm early in your application design process.

Inverter Control Algorithms

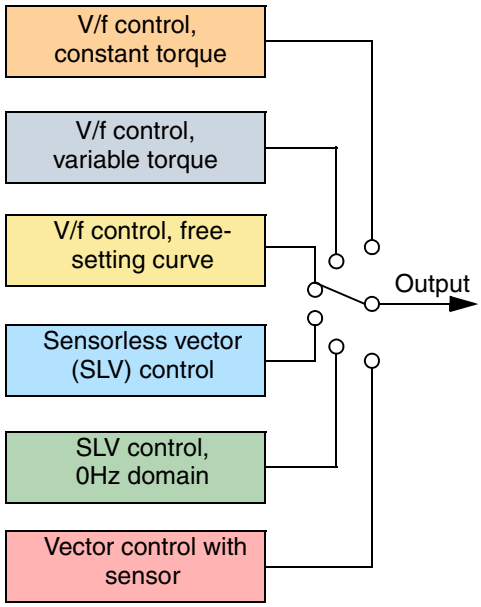

"D" Group: Monitoring Functions

Parameter Monitoring Functions

You can access important system parameter values with the "D" Group monitoring functions, whether the inverter is in Run Mode or Stop Mode. After selecting the function code number for the parameter you want to monitor, press the Function key once to show the value on the display. In Functions D005 and D006 the intelligent terminals use individual segments of the display to show ON/OFF status.

"D" Function			Run Mode Edit	Range and Units	SRW Display
Func. Code	Name	Description			
D001	Output frequency monitor	Real-time display of output frequency to motor, from 0.0 to 400.0 Hz	—	0.0 to 400.0 Hz	FM 0000.00Hz
D002	Output current monitor	Filtered display of output current to motor (100 mS internal filter time constant)	—	A	Iout 0000.0A
D003	Rotation direction monitor	Three different indications: "F". Forward "o". Stop "r" Reverse	—	—	Dir STOP
D004	Process variable (PV), PID feedback monitor	Displays the scaled PID process variable (feedback) value (A75 is scale factor)	—	—	PID-FB 0000.00%
D005	Intelligent input terminal status	Displays the state of the intelligent input terminals: 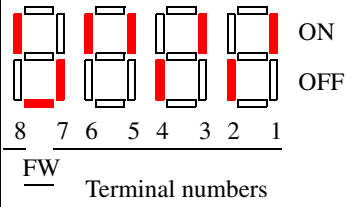 	—	—	IN-TM LLLLLLLLL
D006	Intelligent output terminal status	Displays the state of the intelligent output terminals: 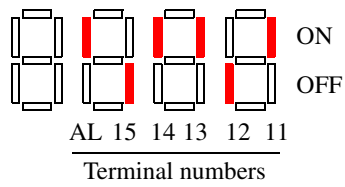 	—	—	OUT-TM LLLLLL
D007	Scaled output frequency monitor	Displays the output frequency scaled by the constant in B86. Decimal point indicates range: XX.XX 0.00 to 99.99 XXX.X 100.0 to 999.9 XXXX. 1000 to 9999 XXXX 10000 to 99990	—	User-defined	F-CNV 000000.00
D012	Torque monitor	Estimated output torque value, range is -300.0 to +300.0%	—	%	TRQ +000%
D013	Output voltage monitor	Voltage of output to motor, range is 0.0 to 600.0V	—	VAC	Vout 000.0V

"D" Function			Run Mode Edit	Range and Units	SRW Display
Func. Code	Name	Description			
D014	Power monitor	0.0 to 999.9	—	kW	Power 000.0kW
D016	Cumulative operation RUN time monitor	Displays total time the inverter has been in RUN mode in hours. Range is 0 to 9999 / 1000 to 9999/ 100 to 999 (10,000 to 99,900) hrs.	—	hours	RUN 0000000hr
D017	Cumulative power-on time monitor	Displays total time the inverter has had input power (ON) in hours. Range is: 0 to 9999 / 100.0 to 999.9 / 1000 to 9999 / 100 to 999 hrs.	—	hours	ON 0000000hr

Trip Event and Programming Error Monitoring

The trip event and history monitoring feature lets you cycle through related information using the keypad. See "Monitoring Trip Events, History, & Conditions" on page 6–5 for more details.

Programming errors generate an error code that begins with the special E character. See "Programming Error Codes" on page 3–68 for more information.

"D" Function			Run Mode Edit Lo Hi	Range and Units	SRW Display
Func. Code	Name	Description			
D080	Trip Counter	Number of trip events	—	—	ERR COUNT 00000
D081 to D086	Trip monitor 1 to 6	Displays trip event information	—	—	(Trip event type)
D090	Programming error monitor	Displays programming error code	—	—	XXXX

"F" Group: Main Profile Parameters

The basic frequency (speed) profile is defined by parameters contained in the "F" Group as shown to the right. The output frequency is set in Hz, but acceleration and deceleration are specified seconds (the time to ramp from zero to maximum frequency, or from maximum frequency to zero). The motor direction parameter determines whether the keypad Run key produces a FW or RV command. This parameter does not affect the [FW] terminal or [RV] intelligent terminal function, which you configure separately.

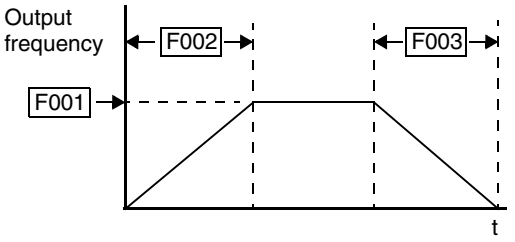

Acceleration 1 and Deceleration 1 are the standard default accel and decel values for the main profile. Accel and decel values for an alternative profile are specified by using parameters Ax92 through Ax93. The motor direction selection (F004) determines the direction of rotation as commanded only from the keypad. This setting applies to any motor profile (1st, 2nd, or 3rd) in use at a particular time.

"F" Function			Run Mode Edit Lo Hi	Defaults			Units	SRW Display
Func. Code	Name	Description		–FE (EU)	–FU (US)	–FR (JP)		
F001	Output frequency setting	Standard default target frequency that determines constant motor speed Range is 0 to 400 Hz	✔ ✔	0.00	0.00	0.00	Hz	>F001 SET-Freq. TM 0000.00Hz 2FS 0000.00Hz 3FS 0000.00Hz TM 0000.00Hz JG 0000.00Hz 1S 0000.00Hz 15S 0000.00Hz OP1 0000.00Hz OP2 0000.00Hz RS485 0000.00Hz
F002	Acceleration (1) time setting	Standard default acceleration Range is 0.01 to 3600 sec.	✔ ✔	30.0	30.0	30.0	sec.	>F002 ACCEL TIME1 0030.00s
F202	Acceleration (1) time setting, 2nd motor	Standard default acceleration, 2nd motor Range is 0.01 to 3600 sec.	✔ ✔	30.0	30.0	30.0	sec.	>F202 2ACCEL TIME1 0030.00s
F302	Acceleration (1) time setting, 3rd motor	Standard default acceleration, 3rd motor Range is 0.01 to 3600 sec.	✔ ✔	30.0	30.0	30.0	sec.	>F302 3ACCEL TIME1 0030.00s
F003	Deceleration (1) time setting	Standard default deceleration Range is 0.01 to 3600 sec.	✔ ✔	30.0	30.0	30.0	sec.	>F003 DECEL TIME1 0030.00s
F203	Deceleration (1) time setting, 2nd motor	Standard default deceleration, 2nd motor Range is 0.01 to 3600 sec.	✔ ✔	30.0	30.0	30.0	sec.	>F203 2DECEL TIME1 0030.00s
F303	Deceleration (1) time setting, 3rd motor	Standard default deceleration, 3rd motor Range is 0.01 to 3600 sec.	✔ ✔	30.0	30.0	30.0	sec.	>F303 3DECEL TIME1 0030.00s
F004	Keypad Run key routing	Two options; select codes: 00 Forward 01 Reverse	✘ ✘	00	00	00	—	>F004 DIG-RUN SELECT FW

"A" Group: Standard Functions

Basic Parameter Settings

These settings affect the most fundamental behavior of the inverter—the outputs to the motor. The frequency of the inverter's AC output determines the motor speed. You may select from three different sources for the reference speed. During application development you may prefer using the potentiometer, but you may switch to an external source (control terminal setting) in the finished application, for example.

The base frequency and maximum frequency settings interact according to the graph below (left). The inverter output operation follows the constant V/f curve until it reaches the full-scale output voltage. This initial straight line is the constant-torque part of the operating characteristic. The horizontal line over to the maximum frequency serves to let the motor run faster, but at a reduced torque. This is the constant-horsepower part of the characteristic. If you want the motor to output constant torque over its entire operating range (limited to the motor nameplate voltage and frequency rating), then set the base frequency and maximum frequency equal as shown (below right).

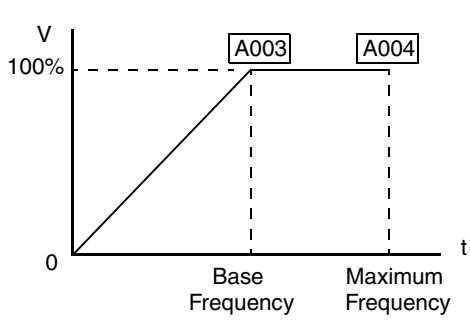

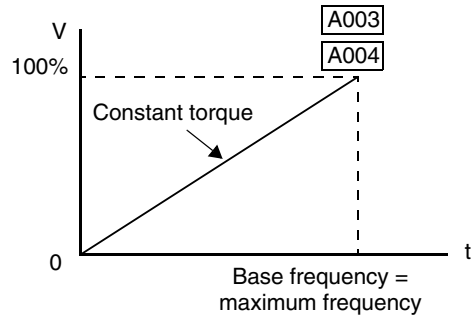



NOTE: The "2nd motor" and "3rd motor" settings in the tables in this chapter store an alternate set of parameters for additional motors. The inverter can use the 1st, 2nd, or 3rd set of parameters to generate the output frequency to the motor. See "Configuring the Inverter for Multiple Motors" on page 4–72.

"A" Function			Run Mode Edit Lo Hi	Defaults			Units	SRW Display
Func. Code	Name	Description		–FE (EU)	–FU (US)	–FR (JP)		
A001	Frequency source setting	Six options; select codes: 00 Keypad potentiometer 01 Control terminal 02 Function F001 setting 03 RS485 serial command 04 Expansion board 1 05 Expansion board 2	✘ ✘	01	01	02	—	>A001 F-SET SELECT TRM
A002	Run command source setting	Five options; select codes: 01 Input terminal [FW] or [RV] (assignable) 02 Run key on keypad, or digital operator 03 RS485 serial command 04 Start/Stop, expansion card #1 05 Start/Stop, expansion card #2	✘ ✘	01	01	02	—	>A002 F/R SELECT TRM
A003	Base frequency setting	Settable from 30 Hz to the maximum frequency	✘ ✘	50.	60.	60.	Hz	>A003 F-BASE F 0060Hz

"A" Function			Run Mode Edit Lo Hi	Defaults			Units	SRW Display
Func. Code	Name	Description		–FE (EU)	–FU (US)	–FR (JP)		
A203	Base frequency setting, 2nd motor	Settable from 30 Hz to the maximum frequency	✘ ✘	50.	60.	60.	Hz	>A203 2F-BASE F 0060Hz
A303	Base frequency setting, 3rd motor	Settable from 30 Hz to the maximum frequency	✘ ✘	50.	60.	60.	Hz	>A303 3F-BASE F 0060Hz
A004	Maximum frequency setting	Settable from 30 Hz to 400 Hz	✘ ✘	50.	60.	60.	Hz	>A004 F-max F 0060Hz
A204	Maximum frequency setting, 2nd motor	Settable from 30 Hz to 400 Hz	✘ ✘	50.	60.	60.	Hz	>A204 2F-max F 0060Hz
A304	Maximum frequency setting, 3rd motor	Settable from 30 Hz to 400 Hz	✘ ✘	50.	60.	60.	Hz	>A304 3F-max F 0060Hz



NOTE: The base frequency must be less than or equal to the maximum frequency (ensure that A003 ≤ A004).

Analog Input Settings

The inverter has the capability to accept external analog inputs that can command the output frequency to the motor. Signals including voltage input (0 to +10V) at terminal [O], bipolar input (-10 to +10V) at terminal [O2], and current input (4 to 20mA) at terminal [OI] are available. Terminal [L] serves as signal ground for the three analog inputs. The analog input settings adjust the curve characteristics between the analog input and the frequency output.

Adjusting [O–L] characteristics – In the graph to the right, A013 and A014 select the active portion of the input voltage range. Parameters A011 and A012 select the start and end frequency of the converted output frequency range, respectively. Together, these four parameters define the major line segment as shown. When the line does not begin at the origin (A011 and A013 > 0), then A015 defines whether the inverter outputs 0Hz or the A011-specified frequency when the analog input value is less than the A013 setting. When the input voltage is greater than the A014 ending value, the inverter outputs the ending frequency specified by A012.

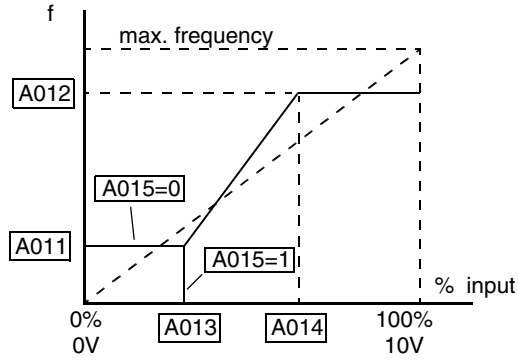

Adjusting [OI–L] characteristics – In the graph to the right, A103 and A104 select the active portion of the input current range. Parameters A101 and A102 select the start and end frequency of the converted output frequency range, respectively. Together, these four parameters define the major line segment as shown. When the line does not begin at the origin (A101 and A103 > 0), then A105 defines whether the inverter outputs 0Hz or the A101-specified frequency when the analog input value is less than the A103 setting. When the input voltage is greater than the A104 ending value, the inverter outputs the ending frequency specified by A102.

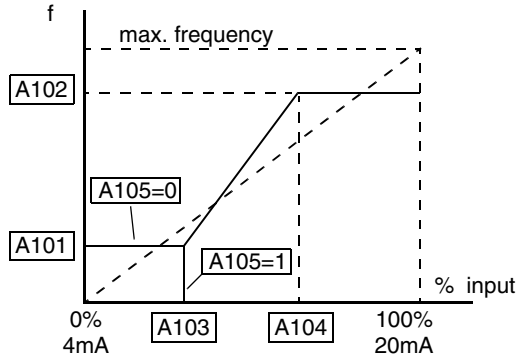

Adjusting [O2–L] characteristics – In the graph to the right, A113 and A114 select the active portion of the input voltage range. Parameters A111 and A112 select the start and end frequency of the converted output frequency range, respectively. Together, these four parameters define the major line segment as shown. When the input voltage is less than the A113 input starting value, the inverter outputs the starting frequency specified by A111. When the input voltage is greater than the A114 ending value, the inverter outputs the ending frequency specified by A112.

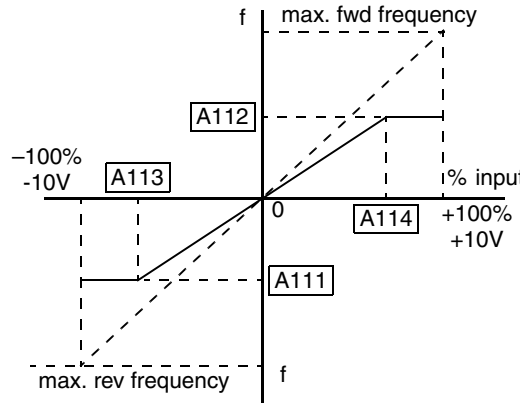

"A" Function			Run Mode Edit Lo Hi	Defaults			Units	SRW Display
Func. Code	Name	Description		–FE (EU)	–FU (US)	–FR (JP)		
A005	[AT] selection	Two options; select codes: 00 Select between [O] and [OI] at [AT] 01 Select between [O] and [O2] at [AT]	✘ ✘	00	00	00	—	>A005 AT SELECT O/OI
A006	[O2] selection	Four options; select codes: 00 No summing, [O2] and [OI] 01 Sum of [O2] and [OI], neg. sum (reverse speed reference) inhibited 02 Sum of [O2] and [OI], neg. sum (reverse speed reference) allowed 03 Disable [O2] input	✘ ✘	03	03	03	—	>A006 O2 SELECT O2
A011	[O]–[L] input active range start frequency	The output frequency corresponding to the voltage input range starting point Range is 0.00 to 400.00 Hz	✘ ✔	0.00	0.00	0.00	Hz	>A011 INPUT-O EXS 0000.00Hz
A012	[O]–[L] input active range end frequency	The output frequency corresponding to the voltage input range ending point Range is 0.00 to 400.00 Hz	✘ ✔	0.00	0.00	0.00	Hz	>A012 INPUT-O EXE 0000.00Hz
A013	[O]–[L] input active range start voltage	The starting point for the voltage input range Range is 0 to 100%	✘ ✔	0.	0.	0.	%	>A013 INPUT-O EX%S 000%
A014	[O]–[L] input active range end voltage	The ending point for the voltage input range Range is 0 to 100%	✘ ✔	100.	100.	100.	%	>A014 INPUT-O EX%E 100%
A015	[O]–[L] input start frequency enable	Two options; select codes: 00 Use A011 start value 01 Use 0 Hz	✘ ✔	01	01	01	—	>A015 INPUT-O LEVEL 0Hz
A016	External frequency filter time constant	Range n = 1 to 30, where n = number of samples for avg.	✘ ✔	8.	8.	8.	Samples	>A016 INPUT F-SAMP 08

Multi-speed and Jog Frequency Settings

The SJ300 inverter has the capability to store and output up to 16 preset frequencies to the motor (A020 to A035). As in traditional motion terminology, we call this *multi-speed profile* capability. These preset frequencies are selected by means of digital inputs to the inverter. The inverter applies the current acceleration or deceleration setting to change from the current output frequency to the new one. The first multi-speed setting is duplicated for the second motor settings (the remaining 15 multi-speeds apply only to the first motor).

The jog speed setting is used whenever the Jog command is active. The jog speed setting range is arbitrarily limited to 10 Hz to provide safety during manual operation. The acceleration to the jog frequency is instantaneous, but you can choose from six modes for the best method for stopping the jog operation.

"A" Function			Run Mode Edit Lo Hi	Defaults			Units	SRW Display
Func. Code	Name	Description		–FE (EU)	–FU (US)	–FR (JP)		
A019	Multi-speed operation selection	Two options; select codes: 00 Binary; up to 16-stage speed using 4 intelligent terminals 01 Single-bit; up to 8-stage speed using 7 intelligent terminals	✘ ✘	00	00	00	—	>A019 SPEED SELECT BINARY
A020	Multi-speed frequency setting	Defines the first speed of a multi-speed profile, range is 0 to 360 Hz A020 = Speed 0 (1st motor)	✔ ✔	0.00	0.00	0.00	Hz	>A020 SPEED FS 0000.00Hz
A220	Multi-speed frequency setting, 2nd motor	Defines the first speed of a multi-speed profile for 2nd motor, range is 0 to 360 Hz A220 = Speed 0 (2nd motor)	✔ ✔	0.00	0.00	0.00	Hz	>A220 SPEED 2FS 0000.00Hz
A320	Multi-speed frequency setting, 3rd motor	Defines the first speed of a multi-speed profile for 3rd motor, range is 0 to 360 Hz A320 = Speed 0 (3rd motor)	✔ ✔	0.00	0.00	0.00	Hz	>A320 SPEED 3FS 0000.00Hz
A021 to A035	Multi-speed frequency settings (for both motors)	Defines 15 more speeds, range is 0 to 360 Hz. A021 = Speed 1... A035 = Speed 15	✔ ✔	0.00	0.00	0.00	Hz	>A021 SPEED 01S 0000.00Hz
A038	Jog frequency setting	Defines limited speed for jog, range is 0.5 to 9.99 Hz	✔ ✔	1.00	1.00	1.00	Hz	>A038 Jogging F 01.00Hz
A039	Jog stop mode	Define how end of jog stops the motor; six options: 00 Free-run stop, jogging disabled during motor run 01 Controlled deceleration, jogging disabled during motor run 02 DC braking to stop, jogging disabled during motor run 03 Free-run stop, jogging always enabled 04 Controlled deceleration, jogging always enabled 05 DC braking to stop, jogging always enabled	✘ ✔	00	00	00	—	>A039 Jogging Mode FRS

Torque Control Algorithms

The inverter generates the motor output according to the V/f algorithm or the sensorless vector control algorithm. Parameter A044 selects the inverter torque control algorithm for generating the frequency output, as shown in the diagram to the right (A244 and A344 for 2nd and 3rd motors, respectively). The factory default is 00 (constant torque V/f control).

Inverter Torque Control Algorithms

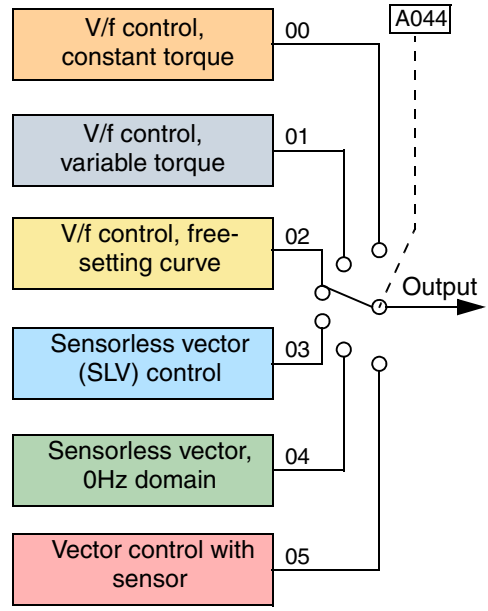

Review the following descriptions to help you choose the best torque control algorithm for your application.

- The built-in V/f curves are oriented toward developing constant torque or variable torque characteristics (see graphs below).
- The free-setting curve provides an even more flexible characteristic, but it requires more parameter settings.
- Sensorless vector control calculates an ideal torque vector based on current motor position, winding currents, and so on. It is a more robust control method than the V/f control methods. However, it is more dependent on actual motor parameters and will require you to set these values carefully or to perform the auto-tuning procedure (see "Auto-tuning of Motor Constants" on page 4–67) to obtain optimum performance.
- Sensorless vector control, 0Hz domain increases the low-speed torque performance (0–2.5Hz) via an advanced Hitachi torque control algorithm. However, you will need to size the inverter for one frame size larger than the motor for proper operation.
- Vector control with sensor requires expansion card SJ–FB encoder feedback board and a motor shaft encoder. Choose this method when precise position/velocity control is required.

Constant and Variable Torque – The graph below (left) shows the constant torque characteristic from 0Hz to the base frequency A003. The voltage remains constant for output frequencies higher than the base frequency.

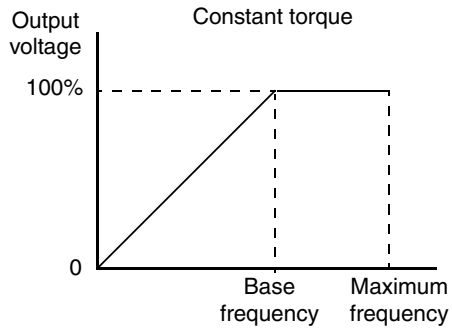

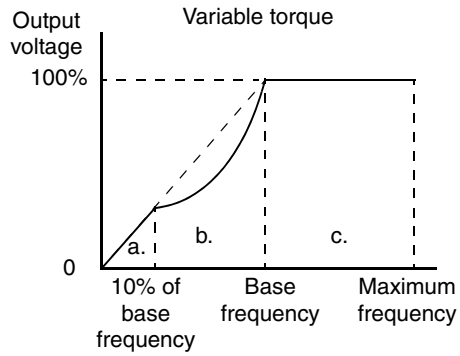

The graph above (right) shows the general characteristic for variable torque. The curve may be best described in three sections, as follows:

a. The range from 0Hz to 10% of the base frequency is the constant torque characteristic. For example, a base frequency of 60Hz ends the constant torque characteristic segment at 6Hz.

b. The range from 10% of the base frequency to the base frequency is the variable (reduced) torque characteristic. The voltage is output in the curve of frequency to the 1.7 power.

c. After reaching the base frequency, the characteristic maintains a constant output voltage for higher frequencies.

Using parameter A045 you can modify the voltage gain of the inverter. This is specified as a percentage of the full-scale setting AVR (Automatic Voltage Regulation) in parameter A082. The gain can be set from 20% to 100%. It must be adjusted in accordance with the motor specifications.

Torque Boost – The Constant and Variable Torque algorithms feature an adjustable *torque boost* curve. When the motor load has a lot of inertia or starting friction, you may need to increase the low frequency starting torque characteristics by boosting the voltage above the normal V/f ratio (shown at right). The boost is applied from zero to 1/2 the base frequency. You set the breakpoint of the boost (point A on the graph) by using parameters A042 and A043. The manual boost is calculated as an addition to the standard straight V/f line (constant torque curve).

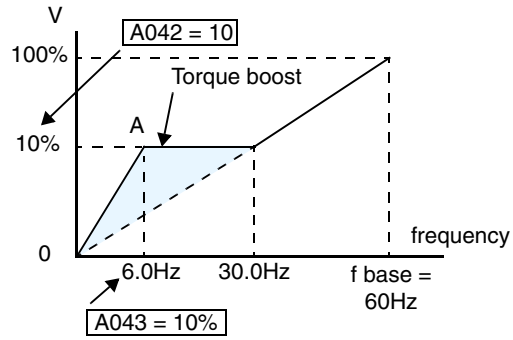

Be aware that running the motor at a low speed for a long time can cause motor overheating. This is particularly true when manual torque boost is ON or if the motor relies on a built-in fan for cooling.

NOTE: Manual torque boost applies only to constant torque (A044=00) and variable torque (A044=01) V/f control.

NOTE: The motor stabilization parameter H006 is effective for constant torque (A044=00) and variable torque (A044=01) V/f control.

V/f Free-setting – The free-setting V/f inverter mode of operation uses voltage and frequency parameter pairs to define seven points on a V/f graph. This provides a way to define a multi-segment V/f curve that best suits your application.

The frequency settings do require that F1 ≤ F2 ≤ F3 ≤ F4 ≤ F5 ≤ F6 ≤ F7; their values must have this ascending order relationship. However, the voltages V1 to V7 may either increase or decrease from one to the next. The example to the right shows the definition of a complex curve by following the setting requirements.

Free-setting f7 (B112) becomes the maximum frequency of the inverter. Therefore, we recommend setting f7 first, since the initial value of all default frequencies f1–f7 is 0Hz.

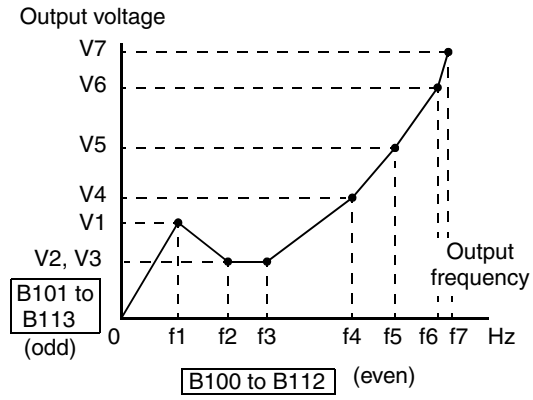

NOTE: The using of V/f free-setting operation specifies parameters that override (make invalid) certain other parameters. The parameters that become invalid are torque boost (A041/A241), base frequency (A003/A203/A303), and maximum frequency (A004/A204/A304). In this case, we recommend leaving their settings at the factory default values.

The V/f free-setting endpoint f7/V7 parameters must stay within the more basic inverter limits in order for the specified free-setting characteristic curve to be achieved. For example, the inverter cannot output a higher voltage than the input voltage or the AVR setting voltage (Automatic Voltage Regulation), set by parameter A082. The graph to the right shows how the inverter input voltage would clip (limit) the characteristic curve if exceeded.

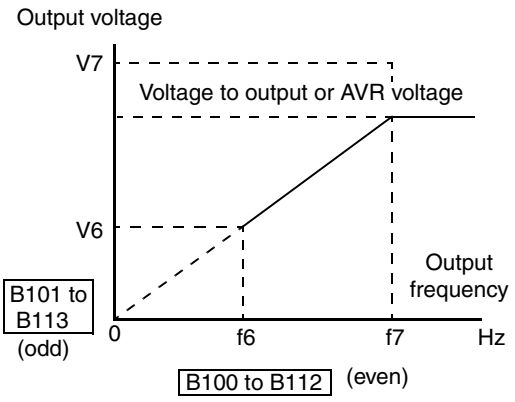

Sensorless Vector Control and**, Sensorless Vector Control, 0Hz Domain –** These advanced torque control algorithms improve the torque performance at very low speeds:

- Sensorless Vector Control – improved torque control at output frequencies down to 0.5 Hz
- Sensorless Vector Control, 0Hz Domain – improved torque control at output frequencies from 0 to 2.5 Hz.

These low-speed torque control algorithms must be tuned to match the characteristics of the particular motor connected to your inverter. Simply using the default motor parameters in the inverter will not work satisfactorily for these control methods. Chapter 4 discusses motor/inverter size selection and how to set the motor parameters either manually or by using the built-in auto-tuning. Before using the sensorless vector control methods, please refer to "Setting Motor Constants for Vector Control" on page 4–65.

NOTE: When the inverter is in SLV (sensorless vector) mode, use B083 to set the carrier frequency greater than 2.1 kHz for proper operation.

NOTE: You must disable sensorless vector operation when two or more motors are connected (parallel operation) to the inverter.

Vector Control with Encoder Feedback – This method of torque control uses an encoder as a motor shaft position sensor. Accurate position feedback allows the inverter to close the velocity loop and provide very accurate speed control, even with variations in motor loads. To use encoder feedback you will need to add an SJ–FB Encoder Feedback Card in the inverter's expansion bay. Please refer to "Expansion Cards" on page 5–5 in this manual or the SJ–FB manual for details.

The following table shows the methods of torque control selection.

"A" Function			Run Mode Edit Lo Hi	Defaults			Units	SRW Display
Func. Code	Name	Description		–FE (EU)	–FU (US)	–FR (JP)		
A041	Torque boost method selection	Two options: 00 Manual torque boost 01 Automatic torque boost	✘ ✘	00	00	00	—	>A041 V-Boost Mode MANUAL
A241	Torque boost method selection, 2nd motor	Two options (for 2nd motor): 00 Manual torque boost 01 Automatic torque boost	✘ ✘	00	00	00	—	>A241 2V-Boost Mode MANUAL

"A" Function			Run Mode Edit Lo Hi	Defaults			Units	SRW Display
Func. Code	Name	Description		–FE (EU)	–FU (US)	–FR (JP)		
A042	Manual torque boost value	Can boost starting torque between 0 and 20% above normal V/f curve, from 0 to 1/2 base frequency	✔ ✔	1.0	1.0	1.0	—	>A042 V-Boost Code 01.0%
A242	Manual torque boost value, 2nd motor	Can boost starting torque between 0 and 20% above normal V/f curve, from 0 to 1/2 base frequency	✔ ✔	1.0	1.0	1.0	—	>A242 2V-Boost Code 01.0%
A342	Manual torque boost value, 3rd motor	Can boost starting torque between 0 and 20% above normal V/f curve, from 0 to 1/2 base frequency	✔ ✔	1.0	1.0	1.0	—	>A342 3V-Boost Code 01.0%
A043	Manual torque boost frequency adjustment	Sets the frequency of the V/f breakpoint A in graph (top of previous page) for torque boost	✔ ✔	5.0	5.0	5.0	%	>A043 V-Boost F 05.0%
A243	Manual torque boost frequency adjustment, 2nd motor	Sets the frequency of the V/f breakpoint A in graph (top of previous page) for torque boost	✔ ✔	5.0	5.0	5.0	%	>A243 2V-Boost F 05.0%
A343	Manual torque boost frequency adjustment, 3rd motor	Sets the frequency of the V/f breakpoint A in graph (top of previous page) for torque boost	✔ ✔	5.0	5.0	5.0	%	>A343 3V-Boost F 05.0%
A044	V/f characteristic curve selection, 1st motor	Six torque control modes: 00 V/f constant torque 01 V/f variable torque 02 V/f free-setting curve 03 Sensorless vector SLV 04 0Hz domain SLV 05 Vector control with encoder feedback	✘ ✘	00	00	00	—	>A044 Control 1st VC
A244	V/f characteristic curve selection, 2nd motor	Six torque control modes: 00 V/f constant torque 01 V/f variable torque 02 V/f free-setting curve 03 Sensorless vector SLV 04 0Hz domain SLV 05 Vector control with encoder feedback	✘ ✘	00	00	00	—	>A244 2Control 2nd VC
A344	V/f characteristic curve selection, 3rd motor	Six torque control modes: 00 V/f constant torque 01 V/f variable torque 02 V/f free-setting curve 03 Sensorless vector SLV 04 0Hz domain SLV 05 Vector control with encoder feedback	✘ ✘	00	00	00	—	>A344 3Control 3rd VC
A045	V/f gain setting	Sets voltage gain of the inverter from 20 to 100%	✔ ✔	100.	100.	100.	%	>A045 V-Gain Gain 100%

DC Braking Settings

The DC braking feature can provide additional stopping torque when compared to a normal deceleration to a stop. It can also ensure the motor and load are stopped before acceleration.

When decelerating – DC braking is particularly useful at low speeds when normal deceleration torque is minimal. During deceleration, the inverter injects a DC voltage into the motor windings during deceleration below a frequency you can specify (A052). The braking power (A054) and duration (A055) can both be set. You can optionally specify a wait time before DC braking (A053), during which the motor will free run (coast).

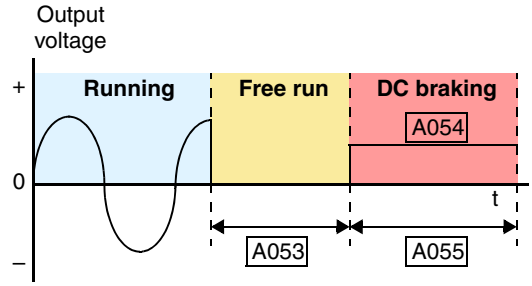

When starting – You can also apply DC braking upon the application of a Run command, specifying both the DC braking force level (A057) and the duration (A058). This will serve to stop the rotation of the motor and the load, when the load is capable of driving the motor. This effect, sometimes called "windmilling," is common in fan applications. Often, air moving in duct work will drive the fan in a backward direction. If an inverter is started into such a backward-rotating load, over-current trips can occur. Use DC braking as an "anti-windmilling" technique to stop the motor and load, and allow a normal acceleration from a stop. See also the "Acceleration Pause Function" on page 3–21.

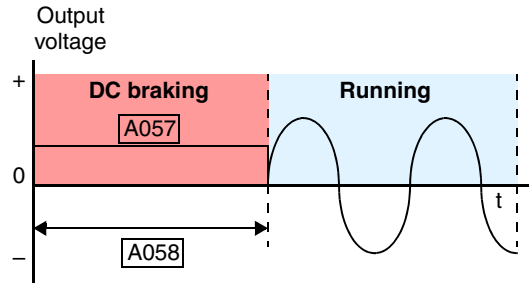

You can configure the inverter to apply DC braking at stopping only, at starting only, or both. DC braking power (0–100%) can be set separately for stopping and starting cases.

You can configure DC braking to initiate in one of two ways:

1. **Internal DC braking** – Set A051=01 to enable internal braking. The inverter automatically applies DC braking as configured (during stopping, starting, or both).
2. **External DC braking** – Configure an input terminal with option code 7 [DB] (see "External Signal for DC Injection Braking" on page 4–17 for more details). Leave A051=00, although this setting is ignored when a [DB] input is configured. The DC braking force settings (A054 and A057) still apply. However, the braking time settings (A055 and A058) do not apply (see level and edge triggered descriptions below). Use A056 to select level or edge detection for the external input.

   a. Level triggered – When the [DB] input signal is ON, the inverter immediately applies DC injection braking, whether the inverter is in Run Mode or Stop Mode. You control DC braking time by the duration of the [DB] pulse.

   b. Edge triggered – When the [DB] input transitions OFF-to-ON and the inverter is in Run Mode, it will apply DC braking only until the motor stops... then DC braking is OFF. During Stop Mode, the inverter ignores OFF-to-ON transitions. Therefore, do not use edge triggered operation when you need DC braking before acceleration.



CAUTION: Be careful to avoid specifying a braking time that is long enough to cause motor overheating. If you use DC braking, we recommend using a motor with a built-in thermistor and wiring it to the inverter's thermistor input (see "Thermistor Thermal Protection" on page 4–28). Also refer to the motor manufacturer's specifications for duty-cycle recommendations during DC braking.

"A" Function			Run Mode Edit Lo Hi	Defaults			Units	SRW Display
Func. Code	Name	Description		–FE (EU)	–FU (US)	–FR (JP)		
A051	DC braking enable	Two options; select codes: 00 Disable 01 Enable	✘ ✔	00	00	00	—	>A051 DCB Mode OFF
A052	DC braking frequency setting	The frequency at which DC braking activates during decel. Range is 0.00 to 60.00 Hz	✘ ✔	0.50	0.50	0.50	Hz	>A052 DCB F 00.50Hz
A053	DC braking wait time	The delay after reaching the DC braking frequency, or [DB] signal, before DC braking begins. Range is 0.0 to 5.0 seconds	✘ ✔	0.0	0.0	0.0	sec.	>A053 DCB WAIT 0.0s
A054	DC braking force during deceleration	Variable DC braking force. Range is from 0% to 100%	✘ ✔	0.	0.	0.	%	>A054 DCB STP-V 000%
A055	DC braking time for deceleration	Sets the duration for DC braking during decel. Range is 0.0 to 60.0 seconds	✘ ✔	0.0	0.0	0.0	sec.	>A055 DCB STP-T 00.0s
A056	DC braking / edge or level detection for [DB] input	Two options; select codes: 00 Edge detection 01 Level detection	✘ ✔	01	01	01	—	>A056 DCB KIND LEVEL
A057	DC braking force for starting	Variable DC braking force. Range is 0 to 100%	✘ ✔	0.	0.	0.	%	>A057 DCB STA-V 000%
A058	DC braking time for starting	Sets the duration for DC braking before accel. Range is 0.0 to 60.0 seconds	✘ ✔	0.0	0.0	0.0	sec.	>A058 DCB STA-T 00.0s
A059	DC braking carrier frequency setting	Range is 0.5 to 15 kHZ for models up to –550xxx, range is 0.5 to 10kHz for 750xxx to 1500xxx models	✘ ✘	3.0	3.0	3.0	kHz	>A059 DCB CARRIER 05.0kHz

Derating of DC Braking – The inverter uses an internal carrier frequency (set by A059) to generate a DC braking voltage (do not confuse with main inverter output carrier frequency set by B083). The maximum DC braking force available to the inverter is more limited with higher DC braking carrier frequency settings for A059 according to the graphs below.

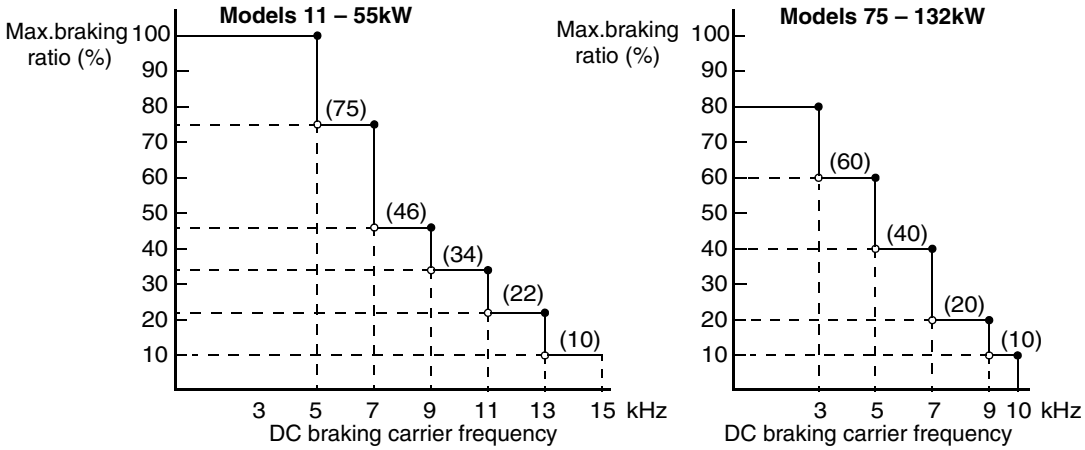

Frequency-related Functions

Frequency Limits – Upper and lower limits can be imposed on the inverter output frequency. These limits will apply regardless of the source of the speed reference. You can configure the lower frequency limit to be greater than zero as shown in the graph to the right. The upper limit must not exceed the rating of the motor or capability of the machinery.

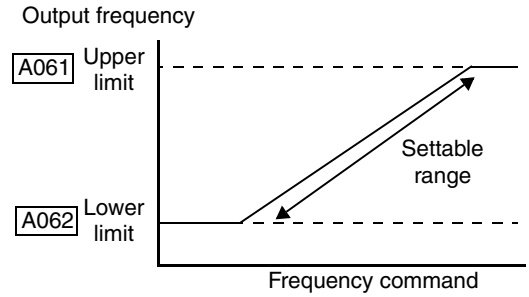

"A" Function			Run Mode Edit Lo Hi	Defaults			Units	SRW Display
Func. Code	Name	Description		–FE (EU)	–FU (US)	–FR (JP)		
A061	Frequency upper limit setting	Sets a limit on output frequency less than the maximum frequency (A004) Range is 0.50 to 400.0 Hz 0.00 setting is disabled >0.10 setting is enabled	✘ ✔	0.00	0.00	0.00	Hz	>A061 LIMIT HIGH 0000.00Hz
A261	Frequency upper limit setting, 2nd motor	Sets a limit on output frequency less than the maximum frequency (A004) Range is 0.50 to 400.0 Hz 0.00 setting is disabled >0.10 setting is enabled	✘ ✔	0.00	0.00	0.00	Hz	>A261 2LIMIT HIGH 0000.00Hz
A062	Frequency lower limit setting	Sets a limit on output frequency greater than zero Range is 0.50 to 400.0 Hz 0.00 setting is disabled >0.1 setting is enabled	✘ ✔	0.00	0.00	0.00	Hz	>A062 LIMIT LOW 0000.00Hz
A262	Frequency lower limit setting, 2nd motor	Sets a limit on output frequency greater than zero Range is 0.50 to 400.0 Hz 0.00 setting is disabled >0.10 setting is enabled	✘ ✔	0.00	0.00	0.00	Hz	>A262 2LIMIT LOW 0000.00Hz

Jump Frequencies – Some motors or machines exhibit resonances at particular speed(s), which can be destructive for prolonged running at those speeds. The inverter has up to three *jump frequencies* as shown in the graph. The hysteresis around the jump frequencies causes the inverter output to skip around the sensitive frequency values.

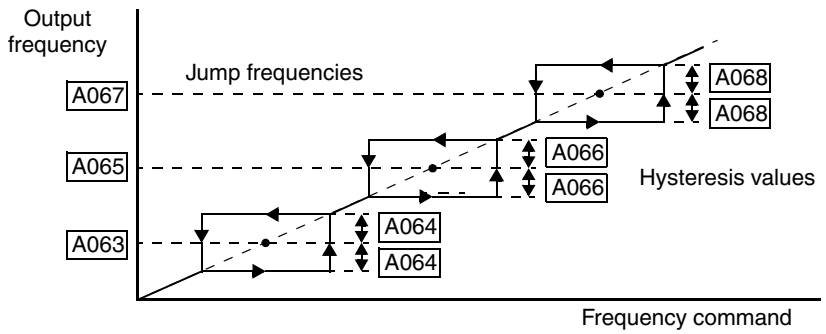

"A" Function			Run Mode Edit Lo Hi	Defaults			Units	SRW Display
Func. Code	Name	Description		–FE (EU)	–FU (US)	–FR (JP)		
A063 A065 A067	Jump (center) frequency setting	Up to 3 output frequencies can be defined for the output to jump past to avoid motor resonances (center frequency) Range is 0.00 to 400.0 Hz	✘ ✔	0.00	0.00	0.00	Hz	>A063 JUMP F1 0000.00Hz >A065 JUMP F2 0000.00Hz >A067 JUMP F3 0000.00Hz
A064 A066 A068	Jump (hysteresis) frequency width setting	Defines the distance from the center frequency at which the jump occurs Range is 0.0 to 10.0 Hz	✘ ✔	0.50	0.50	0.50	Hz	>A064 JUMP W1 00.50Hz >A066 JUMP W2 00.50Hz >A068 JUMP W3 00.50Hz

Acceleration Pause Function

The acceleration pause function can be used to minimize the occurrence of over-current trips when accelerating high inertia loads. It introduces a dwell or pause in the acceleration ramp. You can control the frequency at which this dwell occurs (A069), and the duration of the pause time (A070). This function can also be used as an anti-windmilling tool, when the load might have a tendency to drive the motor in a reverse direction while the inverter is in a Stop mode. Initiating a normal acceleration in such a situation may result in over-current trips. This function can be used to keep the inverter output frequency and voltage at low levels long enough to bring the load to a stop, and commence turning in the desired direction before the acceleration ramp resumes. See also "DC Braking Settings" on page 3–18.

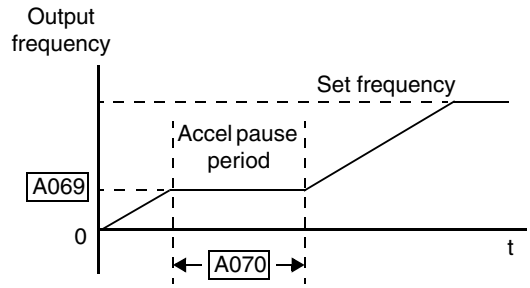

"A" Function			Run Mode Edit Lo Hi	Defaults			Units	SRW Display
Func. Code	Name	Description		–FE (EU)	–FU (US)	–FR (JP)		
A069	Acceleration pause frequency setting	Range is 0.00 to 400.0Hz	✘ ✔	0.00	0.00	0.00	Hz	>A069 F-STOP F 0000.00H
A070	Acceleration pause time setting	Range is 0.0 to 60.0 sec.	✘ ✔	0.0	0.0	0.0	sec.	>A070 F-STOP T 00.0s

PID Control

When enabled, the built-in PID loop calculates an ideal inverter output value to cause a loop feedback process variable (PV) to move closer in value to the setpoint (SP). The current frequency command serves as the SP. The PID loop algorithm will read the analog input for the process variable (you specify either current or voltage input) and calculate the output.

- A scale factor in A075 lets you multiply the PV by a factor, converting it into engineering units for the process.
- Proportional, integral, and derivative gains are all adjustable.
- Optional – You can assign an intelligent input terminal the option code 23, PID Disable. When active, this input disables PID operation. See "Intelligent Input Terminal Overview" on page 3–49.
- See "PID Loop Operation" on page 4–71 for more information.

"A" Function			Run Mode Edit Lo Hi	Defaults			Units	SRW Display
Func. Code	Name	Description		–FE (EU)	–FU (US)	–FR (JP)		
A071	PID Enable	Enables PID function, two option codes: 00 PID operation OFF 01 PID operation ON	✘ ✔	00	00	00	—	>A071 PID SW OFF
A072	PID proportional gain	Proportional gain has a range of 0.2 to 5.0	✔ ✔	1.0	1.0	1.0	—	>A072 PID P 1.0
A073	PID integral time constant	Integral time constant has a range of 0.0 to 3600 seconds	✔ ✔	1.0	1.0	1.0	sec.	>A073 PID I 0001.0s
A074	PID derivative time constant	Derivative time constant has a range of 0.0 to 100 seconds	✔ ✔	0.0	0.0	0.0	sec.	>A074 PID D 000.00
A075	PV scale conversion	Process Variable (PV) scale factor (multiplier), range of 0.01 to 99.99	✘ ✔	1.00	1.00	1.00	—	>A075 PID CONV 001.00
A076	PV source setting	Selects source of Process Variable (PV), option codes: 00 [OI] terminal (current input) 01 [O] terminal (voltage input)	✘ ✔	00	00	00	—	>A076 PID INPUT OI



NOTE: The setting A073 for the integrator is the integrator's time constant Ti, not the gain. The integrator gain Ki = 1/Ti. When you set A073 = 0, the integrator is disabled.

Automatic Voltage Regulation (AVR) Function

The automatic voltage regulation (AVR) feature keeps the inverter output voltage at a relatively constant amplitude during power input fluctuations. This can be useful if the installation is subject to input voltage disturbances. However, the inverter cannot boost its motor output to a voltage higher than the power input voltage. If you enable this feature, be sure to select the proper voltage class setting for your motor.

"A" Function			Run Mode Edit Lo Hi	Defaults			Units	SRW Display
Func. Code	Name	Description		–FE (EU)	–FU (US)	–FR (JP)		
A081	AVR function select	Automatic (output) voltage regulation, selects from three type of AVR functions, three option codes: 00 AVR enabled 01 AVR disabled 02 AVR enabled except during deceleration	✘ ✘	00	00	00	—	>A081 AVR MODE DOFF
A082	AVR voltage select	200V class inverter settings: 200/215/220/230/240 400V class inverter settings: 380/400/415/440/460/480	✘ ✘	230/400	230/460	200/400	V	>A082 AVR AC 230

Energy Savings Mode / Optimal Accel/Decel

Energy Savings Mode – This function allows the inverter to deliver the minimum power necessary to maintain speed at any given frequency. This works best when driving variable torque characteristic loads such as fans and pumps. Parameter A085=01 enables this function and A086 controls the degree of its effect. A setting of 0.0 yields slow response but high accuracy, while a setting of 100 will yield a fast response with lower accuracy.

"A" Function			Run Mode Edit Lo Hi	Defaults			Units	SRW Display
Func. Code	Name	Description		–FE (EU)	–FU (US)	–FR (JP)		
A085	Operation mode selection	Three options: 00 Normal operation 01 Energy-saver operation 02 Optimal accel/decel operation	✘ ✘	00	00	00	—	>A085 RUN MODE NOR
A086	Energy saving mode tuning	Range is 0.0 to 100 sec.	✔ ✔	50.0	50.0	50.0	sec.	>A086 RUN ECO 0050.0s

Optimal Accel/Decel Operation – This feature uses "fuzzy" logic to optimize acceleration and deceleration curves in real time. It is enabled by A085=02. Optimal accel/decel operation automatically adjusts the acceleration and deceleration times in response to changes in load or inertia to take advantage of the maximum output current capability of the inverter. In general, optimal accel/decel will allow for the shortest accel and decel times based on the actual load conditions. The function continuously monitors output current and DC bus voltage to avoid reaching their respective trip levels.



NOTE: In this mode, the settings of acceleration and deceleration times (F002 and F003) are disregarded.

Optimal Accel/Decel Operation, continued...

The acceleration time is controlled to maintain output current below the level set by the Overload Restriction Function if enabled (Parameters B021/B024, B022/B025, and B023/B026). If Overload Restriction is not enabled, then the current limit used is 150% of the inverter's rated output current.

The deceleration time is controlled so that the output current is maintained below 150% of the inverter's rated current, *and* the DC bus voltage is maintained below the OV Trip level (358V or 770V).

NOTE: DO NOT use Optimal Accel/Decel (A085 = 02) when an application...
- has a requirement for constant acceleration or deceleration
- has a load inertia more than (approx.) 20 times the motor inertia
- uses internal or external regenerative braking
- uses any of the vector control modes (A044 = 03, 04, or 05). This function is ONLY compatible with V/F control.

NOTE: If the load exceeds the rating of the inverter, the acceleration time may be increased.

NOTE: If using a motor with a capacity that is one size smaller than the inverter rating, enable the Overload Restriction function (B021/B024) and set the Overload Restriction Level (B022/B025) to 1.5 times the motor nameplate current.

NOTE: Be aware that the acceleration and deceleration times will vary, depending on the actual load conditions during each individual operation of the inverter.

Second Acceleration and Deceleration Functions

The SJ300 inverter features two-stage acceleration and deceleration ramps. This gives flexibility in the profile shape. You can specify the frequency transition point, the point at which the standard acceleration (F002) or deceleration (F003) changes to the second acceleration (A092) or deceleration (A093). These profile options are also available for the second motor settings and third motor settings. All acceleration and deceleration times are time to ramp from zero speed to full speed or full speed to zero speed. Select a transition method via A094 as depicted below. Be careful not to confuse the *second acceleration/deceleration settings* with settings for the *second motor*!

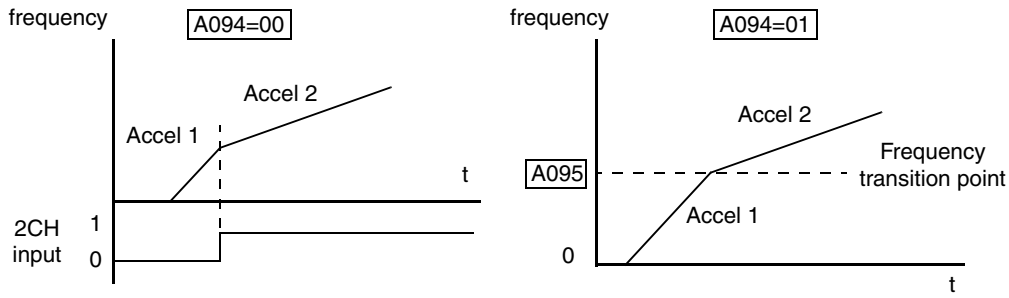

"A" Function			Run Mode Edit Lo Hi	Defaults			Units	SRW Display
Func. Code	Name	Description		–FE (EU)	–FU (US)	–FR (JP)		
A092	Acceleration (2) time setting	Duration of 2nd segment of acceleration, range is: 0.01 to 3600 sec.	✔ ✔	15.0	15.0	15.0	sec.	>A092 ACCEL TIME2 0015.00s
A292	Acceleration (2) time setting, 2nd motor	Duration of 2nd segment of acceleration, 2nd motor, range is: 0.01 to 3600 sec.	✔ ✔	15.0	15.0	15.0	sec.	>A292 2ACCEL TIME2 0015.00s
A392	Acceleration (2) time setting, 3rd motor	Duration of 2nd segment of acceleration, 2nd motor, range is: 0.01 to 3600 sec.	✔ ✔	15.0	15.0	15.0	sec.	>A392 3ACCEL TIME2 0015.00s
A093	Deceleration (2) time setting	Duration of 2nd segment of deceleration, range is: 0.01 to 3600 sec.	✔ ✔	15.0	15.0	15.0	sec.	>A093 DECEL TIME2 0015.00s
A293	Deceleration (2) time setting, 2nd motor	Duration of 2nd segment of deceleration, 2nd motor, range is: 0.01 to 3600 sec.	✔ ✔	15.0	15.0	15.0	sec.	>A293 2DECEL TIME2 0015.00s
A393	Deceleration (2) time setting, 3rd motor	Duration of 2nd segment of deceleration, 2nd motor, range is: 0.01 to 3600 sec.	✔ ✔	15.0	15.0	15.0	sec.	>A393 3DECEL TIME2 0015.00s
A094	Select method to switch to Acc2/Dec2 profile	Two options for switching from1st to 2nd accel/decel: 00 2CH input from terminal 01 transition frequency	✘ ✘	00	00	00	—	>A094 ACCEL CHANGE TM
A294	Select method to switch to Acc2/Dec2 profile, 2nd motor	Two options for switching from1st to 2nd accel/decel: 00 2CH input from terminal 01 transition frequency (2nd motor)	✘ ✘	00	00	00	—	>A294 ACCEL CHANGE TM
A095	Acc1 to Acc2 frequency transition point	Output frequency at which Accel1 switches to Accel2, range is 0.00 to 400.0 Hz	✘ ✘	0.0	0.0	0.0	Hz	>A095 ACCEL CHFr 0000.00Hz
A295	Acc1 to Acc2 frequency transition point, 2nd motor	Output frequency at which Accel1 switches to Accel2, range is 0.00 to 400.0 Hz (2nd motor)	✘ ✘	0.0	0.0	0.0	Hz	>A295 2ACCEL CHFr 0000.00Hz
A096	Dec1 to Dec2 frequency transition point	Output frequency at which Decel1 switches to Decel2, range is 0.00 to 400.0 Hz	✘ ✘	0.0	0.0	0.0	Hz	>A096 DECEL CHFr 0000.00Hz
A296	Dec1 to Dec2 frequency transition point, 2nd motor	Output frequency at which Decel1 switches to Decel2, range is 0.00 to 400.0 Hz (2nd motor)	✘ ✘	0.0	0.0	0.0	Hz	>A296 2DECEL CHFr 0000.00Hz



NOTE: For A095 and A096 (and for 2nd motor settings), if you set a very rapid Acc1 or Dec1 time (less than 1.0 second), the inverter may not be able to change rates to Acc2 or Dec2 before reaching the target frequency. In that case, the inverter decreases the rate of Acc1 or Dec1 in order to achieve the second ramp to the target frequency.

Accel/Decel Characteristics

Standard (default) acceleration and deceleration is linear with time. The inverter CPU can also calculate other curves shown in the graphs below. The sigmoid, U-shape, and reverse U-shape curves are useful for favoring the load characteristics in particular applications. Curve settings for acceleration and deceleration are independently selected via parameters A097 and A098, respectively. You can use the same or different curve types for acceleration and deceleration.

Set value	00	01	02	03
Curve	Linear	Sigmoid	U-shape	Reverse U-shape
Accel A97	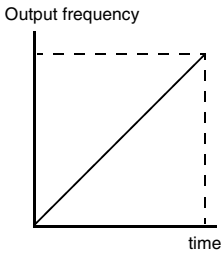	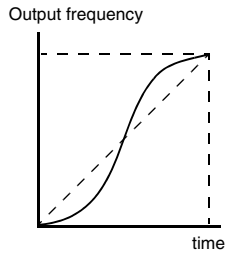	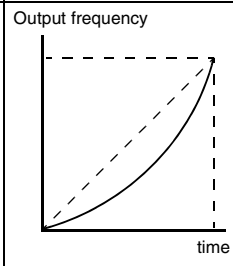	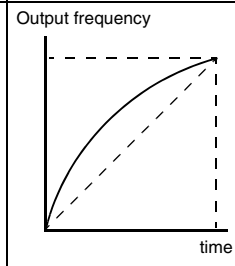
Decel A98	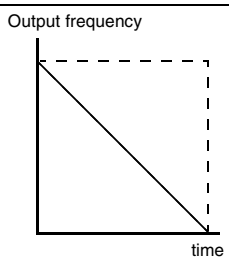	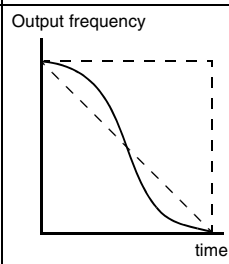	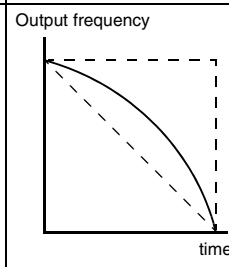	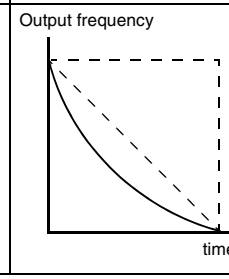
Typical applications	Linear acceleration and deceleration for general-purpose use	Avoid jerk on start/stop for elevators; use for delicate loads on conveyors	Tension control for winding applications, web presses, roller/accumulators	

"A" Function			Run Mode Edit Lo Hi	Defaults			Units	SRW Display
Func. Code	Name	Description		–FE (EU)	–FU (US)	–FR (JP)		
A097	Acceleration curve selection	Set the characteristic curve of Accel1 and Accel2, four options: 00 Linear 01 S-curve 02 U-shape 03 Reverse U-shape	✘ ✘	00	00	00	—	>A097 ACCEL LINE Linear
A098	Deceleration curve selection	Set the characteristic curve of Decel1 and Decel2, four options: 00 Linear 01 S-curve 02 U-shape 03 Reverse U-shape	✘ ✘	00	00	00	—	>A098 DECEL LINE Linear

The acceleration and deceleration curves can deviate from a straight line to a varying degree. Parameters A131 and A132 control the amount of deviation for the acceleration and deceleration curves respectively. The following graphs show intermediate output frequency points as a percentage of the target frequency, for 25%, 50%, and 75% acceleration time intervals.

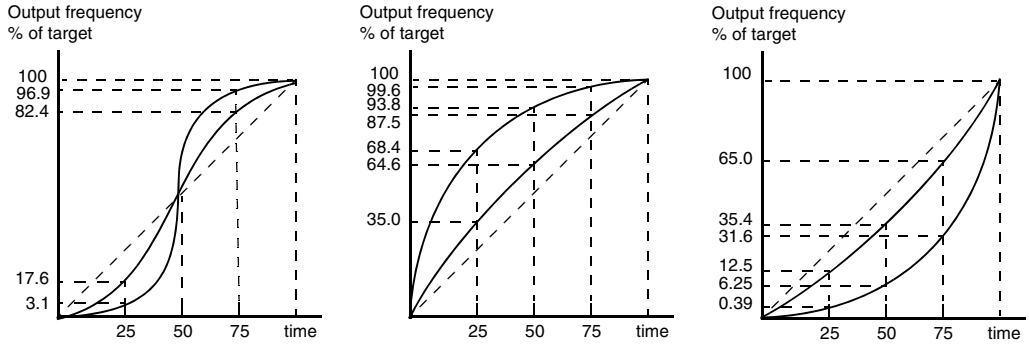

"A" Function			Run Mode Edit Lo Hi	Defaults			Units	SRW Display
Func. Code	Name	Description		–FE (EU)	–FU (US)	–FR (JP)		
A131	Acceleration curve constants setting	Sets the curve deviation from straight-line acceleration in ten levels: 01 smallest deviation 10 largest deviation	✘ ✔	02	02	02	—	>A131 ACCEL GAIN 02
A132	Deceleration curve constants setting	Sets the curve deviation from straight-line deceleration in ten levels: 01 smallest deviation 10 largest deviation	✘ ✔	02	02	02	—	>A132 DECEL GAIN 02

Additional Analog Input Settings

The parameters in the following table adjust the input characteristics of the analog inputs. When using the inputs to command the inverter output frequency, these parameters adjust the starting and ending ranges for the voltage or current, as well as the output frequency range. Related characteristic diagrams are located in "Analog Input Settings" on page 3–11.

"A" Function			Run Mode Edit Lo Hi	Defaults			Units	SRW Display
Func. Code	Name	Description		–FE (EU)	–FU (US)	–FR (JP)		
A101	[OI]–[L] input active range start frequency	The output frequency corresponding to the current input range starting point. Range is 0.00 to 400.0 Hz	✘ ✔	00.0	00.0	00.0	Hz	>A101 INPUT-OI EXS 0000.00Hz
A102	[OI]–[L] input active range end frequency	The output frequency corresponding to the current input range ending point. Range is 0.00 to 400.0 Hz	✘ ✔	00.0	00.0	00.0	Hz	>A102 INPUT-OI EXE 0000.00Hz
A103	[OI]–[L] input active range start current	The starting point for the current input range. Range is 0 to 100%	✘ ✔	20.	20.	20.	%	>A103 INPUT-OI EX%S 020%
A104	[OI]–[L] input active range end current	The ending point for the current input range. Range is 0 to 100%	✘ ✔	100.	100.	100.	%	>A104 INPUT-OI EX%E 100%
A105	[OI]–[L] input start frequency enable	Two options: 00 Use A101 start value 01 Use 0Hz	✘ ✔	01	01	01	Hz	>A105 INPUT-OI LEVEL 0Hz
A111	[O2]–[L] input active range start frequency	The output frequency corresponding to the bipolar voltage input range starting point. Range is –400. to 400. Hz	✘ ✔	0.00	0.00	0.00	Hz	>A111 INPUT-O2 EXS +000.00Hz
A112	[O2]–[L] input active range end frequency	The output frequency corresponding to the bipolar voltage input range ending point. Range is –400. to 400. Hz	✘ ✔	0.00	0.00	0.00	Hz	>A112 INPUT-O2 EXE +000.00Hz
A113	[O2]–[L] input active range start voltage	The starting point for the bipolar voltage input range. Range is –100 to 100%	✘ ✔	-100.	-100.	-100.	%	>A113 INPUT-O2 EX%S -100%
A114	[O2]–[L] input active range end voltage	The ending point for the bipolar voltage input range. Range is –100 to 100%	✘ ✔	100.	100.	100.	%	>A114 INPUT-O2 EX%E +100%

“B” Group: Fine-Tuning Functions

The “B” Group of functions and parameters adjust some of the more subtle but useful aspects of motor control and system configuration.

Automatic Restart Mode and Phase Loss

The restart mode determines how the inverter will resume operation after a fault causes a trip event. The four options provide advantages for various situations. Frequency matching allows the inverter to read the motor speed by virtue of its residual magnetic flux and restart the output at the corresponding frequency. The inverter can attempt a restart a certain number of times depending on the particular trip event:

- Over-current trip, restart up to 3 times
- Over-voltage trip, restart up to 3 times
- Under-voltage trip, restart up to 16 times

When the inverter reaches the maximum number of restarts (3 or 16), you must power-cycle the inverter to reset its operation.

Other parameters specify the allowable under-voltage level and the delay time before restarting. The proper settings depend on the typical fault conditions for your application, the necessity of restarting the process in unattended situations, and whether restarting is always safe.

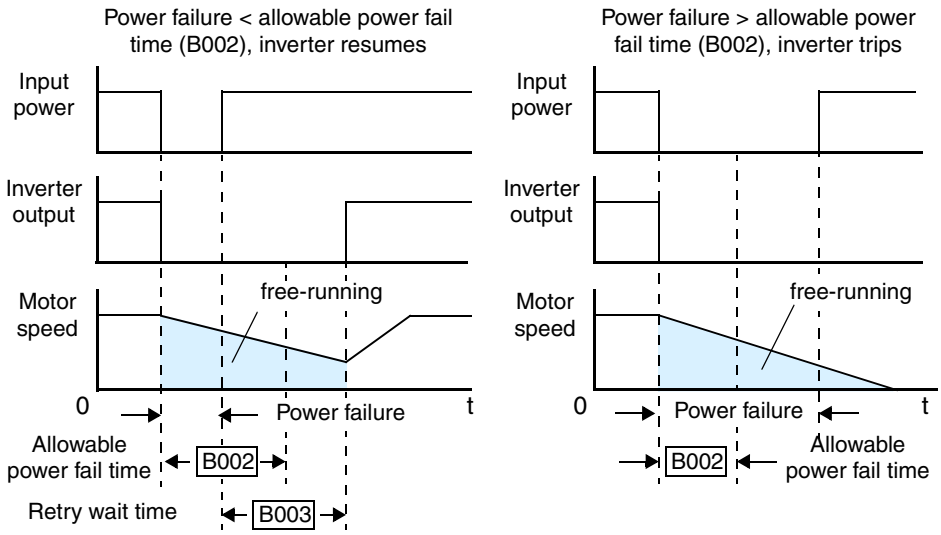

“B” Function			Run Mode Edit Lo Hi	Defaults			Units	SRW Display
Func. Code	Name	Description		–FE (EU)	–FU (US)	–FR (JP)		
B001	Selection of automatic restart mode	Select inverter restart method, four option codes: 00 Alarm output after trip, automatic restart disabled 01 Restart at 0Hz 02 Resume operation after frequency matching 03 Resume previous freq. after freq. matching, then decelerate to stop and display trip info	✘ ✔	00	00	00	—	>b001 IPS POWER ALM

"B" Function			Run Mode Edit Lo Hi	Defaults			Units	SRW Display
Func. Code	Name	Description		–FE (EU)	–FU (US)	–FR (JP)		
B002	Allowable under-voltage power failure time	The amount of time a power input under-voltage can occur without tripping the power failure alarm. If under-voltage exists longer than this time, the inverter trips, even if the restart mode is selected. If it exists less than this time retry will be attempted. Range is 0.3 to 25.0 sec.	✘ ✔	1.0	1.0	1.0	sec.	>b002 IPS TIME 1.0s
B003	Retry wait time before motor restart	Time delay after a trip condition goes away before the inverter restarts the motor. Range is 0.3 to 100 seconds.	✘ ✔	1.0	1.0	1.0	sec.	>b003 IPS WAIT 001.0s
B004	Instantaneous power failure / under-voltage trip alarm enable	Three option codes: 00 Disable 01 Enable 02 Disable during stop and ramp to stop	✘ ✔	00	00	00	—	>b004 IPS TRIP OFF
B005	Number of restarts on power failure / under-voltage trip events	Two option codes: 00 Restart 16 times 01 Always restart	✘ ✔	00	00	00	—	>b005 IPS RETRY 16
B006	Phase loss detection enable	Two option codes: 00 Disable – no trip on phase loss 01 Enable – trip on phase loss	✘ ✔	00	00	00	—	>b006 PH-FAIL SELECT OFF
B007	Restart frequency threshold	When the frequency of the motor is less than this value, the inverter will restart at 0 Hz. Range is 0.00 to 400.0 Hz	✘ ✔	0.00	0.00	0.00	Hz	>b007 IPS F 0000.00Hz

CAUTION: When a loss of phase occurs, increased ripple current will markedly reduce main capacitor life over time. Diode bridge failure can also result. If phase loss occurs under load, the inverter could be damaged. Please pay particular attention to the setting of function B006.

Electronic Thermal Overload Alarm Setting

The thermal overload detection protects the inverter and motor from overheating due to an excessive load. It uses a current/inverse time curve to determine the trip point. The thermal overload alarm [THM] is the resulting intelligent output.

First, use B013 to select the torque characteristic that matches your load. This allows the inverter to utilize the best thermal overload characteristic for your application.

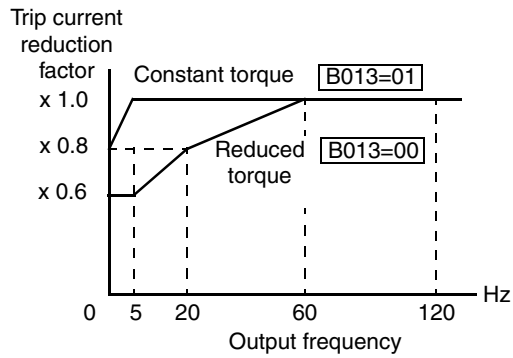

The torque developed in a motor is directly proportional to the current in the windings, which is also proportional to the heat generated (and temperature, over time). Therefore, you must set the thermal overload threshold in terms of current (amperes) with parameter B012. The range is 50% to 120% of the rated current for each inverter model. If the current exceeds the level you specify, the inverter will trip and log an event (error E5) in the history table. The inverter turns the motor output OFF when tripped. Separate settings are available for the second and third motors (if applicable), as shown in the table below.

Function Code	Function/Description	Data or Range
B012 / B212 / B312	Electronic thermal setting (calculated within the inverter from current output)	Range is 0.2 * rated current to 1.2 * rated current

For example, suppose you have inverter model SJ300-110LFE. The rated motor current is 46A. The setting range is (0.2 * 46) to (1.2 *46), or 9.2A to 55.2A. For a setting of B012 = 46A (current at 100%), the figure to the right shows the curve.

The electronic thermal characteristic adjusts the way the inverter calculates thermal heating, based on the type of load connected to the motor, as set by parameter B013.

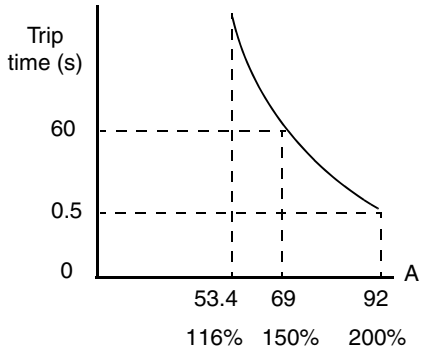

Trip current at 60 Hz

CAUTION: When the motor runs at lower speeds, the cooling effect of the motor's internal fan decreases.

The table below shows the torque profile settings. Use the one that matches your load.

Function Code	Data	Function/Description
B013 / B213 / B313	00	Reduced torque
	01	Constant torque
	02	Free-setting

Reduced Torque Characteristic – The example below shows the effect of the reduced torque characteristic curve (for example motor and current rating). At 20Hz, the output current is reduced by a factor of 0.8 for given trip times.

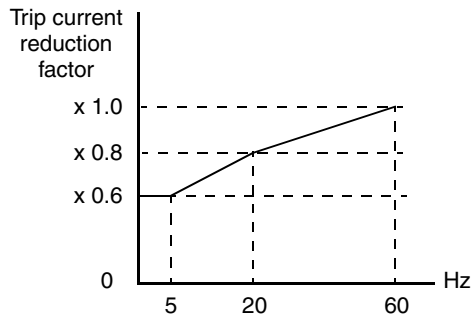

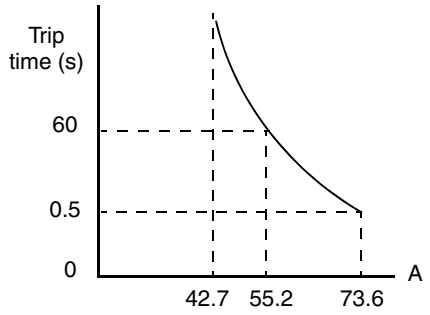

Reduced trip current at 20 Hz

Constant Torque Characteristic – Selecting the constant torque characteristic for the example motor gives the curves below. At 2.5 Hz, the output current is reduced by a factor of 0.9 for given trip times.

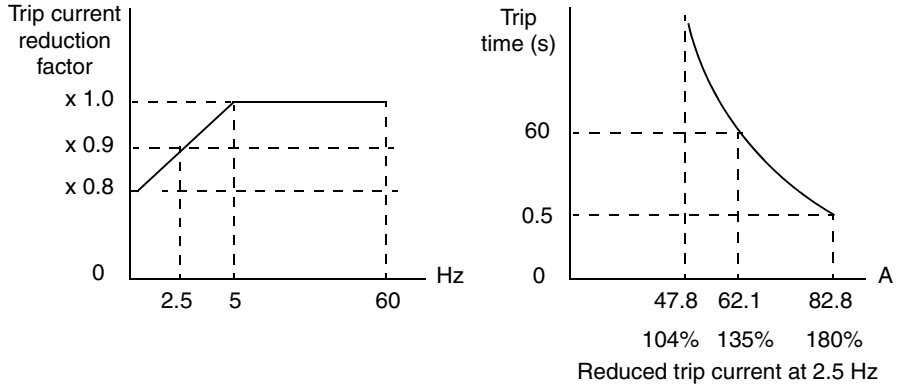

Free Thermal Characteristic - It is possible to set the electronic thermal characteristic using a free-form curve defined by three data points, according to the table below.

Function Code	Name	Description	Range
B015 / B017 / B019	Free-setting electronic thermal frequency 1, 2, 3	Data point coordinates for Hz axis (horizontal) in the free-form curve	0 to 400Hz
B016 / B018 / B020	Free setting electronic thermal current 1, 2, 3	Data point coordinates for Ampere axis (vertical) in the free-form curve	0.0 = (disable) 0.1 to 1000.

The left graph below shows the region for possible free-setting curves. The right graph below shows an example curve defined by three data points specified by B015 – B020.

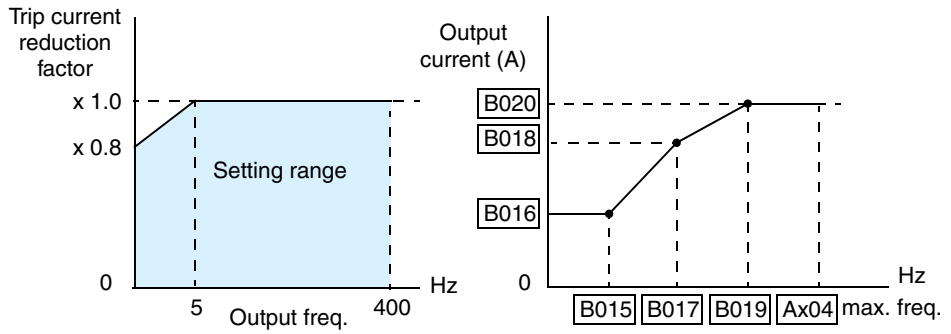

Suppose the electronic thermal setting (B012) is set to 44 Amperes. The left graph below shows the effect of the free setting torque characteristic curve. For example, at (B017) Hz, the output current level to cause overheating in a fixed time period is reduced by a factor of (B018). The right graph below shows the reduced trip current levels in those conditions for given trip times.

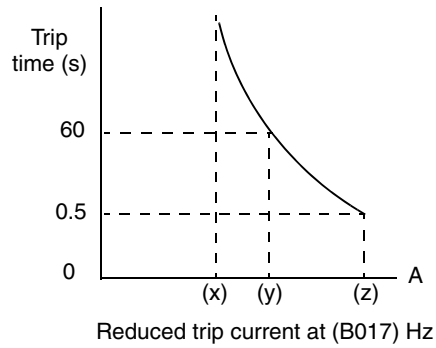

(x) = B018 value x 116%
(y) = B018 value x 120%
(z) = B018 value x 150%

Configuring Drive Parameters

Any intelligent output terminal may be programmed to indicate a thermal warning [THM]. Parameter C061 determines the warning threshold. Please see "Thermal Warning Signal" on page 4–55 for more details.

"B" Function			Run Mode Edit Lo Hi	Defaults			Units	SRW Display
Func. Code	Name	Description		–FE (EU)	–FU (US)	–FR (JP)		
B012	Level of electronic thermal setting	Set a level between 50% and 120% of the inverter rated current	✘ ✔	rated current for each inverter model			A	>b012 E-THM LEVEL 0016.5A
B212	Level of electronic thermal setting, 2nd motor	Set a level between 50% and 120% of the inverter rated current	✘ ✔	rated current for each inverter model			A	>b212 2E-THM LEVEL 0016.5A
B312	Level of electronic thermal setting, 3rd motor	Set a level between 50% and 120% of the inverter rated current	✘ ✔	rated current for each inverter model			A	>b312 3E-THM LEVEL 0016.5A
B013	Electronic thermal characteristic	Select from three curves, option codes: 00 Reduced torque 01 Constant torque 02 V/f free-setting	✘ ✔	01	01	00	—	>b013 E-THM CHAR CRT
B213	Electronic thermal characteristic, 2nd motor	Select from three curves, option codes: 00 Reduced torque 01 Constant torque 02 V/f free-setting	✘ ✔	01	01	00	—	>b213 2E-THM CHAR CRT
B313	Electronic thermal characteristic, 3rd motor	Select from three curves, option codes: 00 Reduced torque 01 Constant torque 02 V/f free-setting	✘ ✔	01	01	00	—	>b313 3E-THM CHAR CRT
B015	Free setting, electronic thermal frequency (1)	Range is 0.0 to 400.0 Hz	✘ ✔	0.	0.	0.	Hz	>b015 E-THM F1 0000Hz
B016	Free setting, electronic thermal current (1)	Range is 0.0 to 1000. A	✘ ✔	0.0	0.0	0.0	A	>b016 E-THM A1 0000.0A
B017	Free setting, electronic thermal frequency (2)	Range is 0.0 to 400.0 Hz	✘ ✔	0.	0.	0.	Hz	>b017 E-THM F2 0000Hz
B018	Free setting, electronic thermal current (2)	Range is 0.0 to 1000. A	✘ ✔	0.0	0.0	0.0	A	>b018 E-THM A2 0000.0A
B019	Free setting, electronic thermal frequency (3)	Range is 0.0 to 400.0 Hz	✘ ✔	0.	0.	0.	Hz	>b019 E-THM F3 0000Hz
B020	Free setting, electronic thermal current (3)	Range is 0.0 to 1000. A	✘ ✔	0.0	0.0	0.0	A	>b020 E-THM A3 0000.0A

Overload Restriction

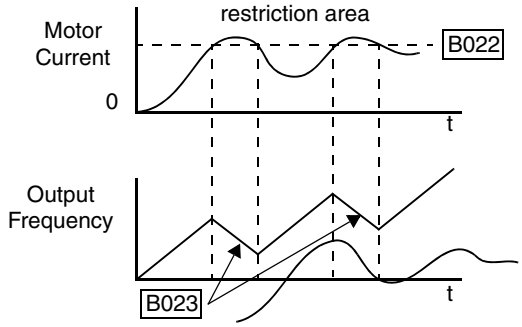

If the inverter's output current exceeds a preset current level you specify during acceleration or constant speed, the overload restriction feature automatically reduces the output frequency to restrict the overload. This feature does not generate an alarm or trip event. You can instruct the inverter to apply overload restriction only during constant speed, thus allowing higher currents for acceleration. Or, you may use the same threshold for both acceleration and constant speed. In the case of controlled deceleration, the inverter monitors both output current and DC bus voltage. The inverter will increase output frequency to try to avoid a trip due to over-current or over-voltage (due to regeneration).

When the inverter detects an overload, it must decelerate the motor to reduce the current until it is less than the threshold. You can choose the rate of deceleration that the inverter uses to lower the output current.

"B" Function			Run Mode Edit Lo Hi	Defaults			Units	SRW Display
Func. Code	Name	Description		–FE (EU)	–FU (US)	–FR (JP)		
B021	Overload restriction operation mode	Select the operating mode during overload conditions, four options, option codes: 00 Disabled 01 Enabled for acceleration and constant speed 02 Enabled for constant speed only 03 Enabled for accel, decel, and constant speed	✘ ✔	01	01	01	—	>b021 OLOAD 1MODE ON
B022	Overload restriction setting	Sets the level for overload restriction, between 50% and 200% of the rated current of the inverter, setting resolution is 1% of rated current	✘ ✔	rated current times 1.50			A	>b022 OLOAD 1LEVEL 0024.8A
B023	Deceleration rate at overload restriction	Sets the deceleration rate when inverter detects overload, range is 0.1 to 30.0, resolution is 0.1.	✘ ✔	1.00	1.00	1.00	sec.	>b023 OLOAD 1CONST 01.00
B024	Overload restriction operation mode (2)	Select the operating mode during motor overload conditions, four options, option codes: 00 Disabled 01 Enabled for acceleration and constant speed 02 Enabled for constant speed only 03 Enabled for accel, decel, and constant speed	✘ ✔	01	01	01	—	>b024 OLOAD 2MODE ON

"B" Function			Run Mode Edit Lo Hi	Defaults			Units	SRW Display
Func. Code	Name	Description		–FE (EU)	–FU (US)	–FR (JP)		
B025	Overload restriction setting (2)	Sets the level for overload restriction (2), between 50% and 200% of the rated current of the inverter, setting resolution is 1% of rated current	✘ ✔	rated current times 1.50			A	>b025 OLOAD 2LEVEL 0024.8A
B026	Deceleration rate at overload restriction (2)	Sets the deceleration rate (2) when inverter detects overload, range is 0.1 to 30.0, resolution is 0.1.	✘ ✔	1.00	1.00	1.00	sec.	>b026 OLOAD 2CONST 01.00

NOTE: Two sets of overload restriction parameters are available. The set that is in use may be selected by means of an intelligent input terminal (see "Overload Restriction" on page 4–35).

Software Lock Mode

The software lock function keeps personnel from accidentally changing parameters in the inverter memory. Use B031 to select from various protection levels.

The table below lists all combinations of B031 option codes and the ON/OFF state of the [SFT] input. Each Check ✔ or Ex ✘ indicates whether the corresponding parameter(s) can be edited. The Standard Parameters column below lists Low and High level access for some lock modes. These refer to the parameter tables throughout this chapter, each of which includes a column titled *Run Mode Edit* as shown to the right. The two marks (Check ✔ or Ex ✘) under the "Lo Hi" subtitle indicate whether Low-level and/or High-level access applies to each parameter as defined in the table below. In some lock modes, you can edit only F001 and the Multi-speed parameter group that includes A020, A220, A320, A021–A035, and A038 (Jog). However, it does not include A019, Multi-speed operation selection. The editing access to B031 itself is unique, and is specified in the right-most two columns below.

Run Mode Edit Lo Hi
✘ ✔

B031 Lock Mode	[SFT] Intelligent Input	Standard Parameters		F001 and Multi-speed	B031	
		Stop	Run	Stop or Run	Stop	Run
00	OFF	✔	Low-level	✔	✔	✘
	ON	✘	✘	✘	✔	✘
01	OFF	✔	Low-level	✔	✔	✘
	ON	✘	✘	✔	✔	✘
02	(ignored)	✘	✘	✘	✔	✘
03	(ignored)	✘	✘	✔	✔	✘
10	(ignored)	✔	High-level	✔	✔	✔

NOTE: Since the software lock function B031 is always accessible when the motor is stopped, this feature is not the same as password protection used in other industrial control devices.

"B" Function			Run Mode Edit Lo Hi	Defaults			Units	SRW Display
Func. Code	Name	Description		–FE (EU)	–FU (US)	–FR (JP)		
B031	Software lock mode selection	Prevents parameter changes in five options: 00 Low-level access, [SFT] input blocks all edits 01 Low-level access, [SFT] input blocks edits (except F001 and Multi-speed parameters) 02 No access to edits 03 No access to edits except F001 and Multi-speed parameters 10 High-level access, including B031	✘ ✔	01	01	01	—	>b031 S-LOCK Mode MD1

NOTE: To disable parameter editing when using B031 lock modes 00 and 01, assign the [SFT] function to one of the intelligent input terminals. See "Software Lock" on page 4–25.

Miscellaneous Settings

The miscellaneous settings include scaling factors, initialization modes, and others. This section covers some of the most important settings you may need to configure.

"B" Function			Run Mode Edit Lo Hi	Defaults			Units	SRW Display
Func. Code	Name	Description		–FE (EU)	–FU (US)	–FR (JP)		
B034	Run/power-on warning time	Range is 0 to 65,530 hours	✘ ✔	0.	0.	0.	hrs.	>b034 TIME WARN 00000
B035	Rotational direction restriction	Three option codes: 00 Enable for both dir. 01 Enable for forward only 02 Enable for reverse only	✘ ✘	00	00	00	—	>b035 LIMIT F/R FREE
B036	Reduced voltage start selection	Seven option codes: 00 Short 01, 02, 03, 04, 05 (middle) 06 Long	✘ ✔	06	06	06	—	>b036 RVS ADJUST 06

Function Code Display Restriction – The inverter has the (optional) capability to suppress the display and editing of certain parameters. Use B037 to select the display options. The purpose of this feature is to hide particular secondary parameters that become unused or not applicable based on more fundamental parameter settings. For example, setting A001 = 01 configures the inverter to get its frequency command from the front keypad potentiometer. In this case, the inverter will not use the analog inputs nor their adjustment parameters for an external frequency command.

"B" Function			Run Mode Edit Lo Hi	Defaults			Units	SRW Display
Func. Code	Name	Description		–FE (EU)	–FU (US)	–FR (JP)		
B037	Function code display restriction	Three option codes: 00 Display all 01 Display only utilized functions (see table below) 02 Display user-selected functions only (configure with U01 to U12)	✘ ✔	00	00	00	—	>b037 DISP Mode ALL

For example, you can set B037=01 to have the inverter suppress the displaying of all analog input parameters when A001=01, as shown in the first row of the following table.

Function Code	Data	Resulting Non-displayed Functions (when B37 = 01)	Notes
A001	01	A005, A006, A011 – A016, A101 – A114, C081 – C083, C121 – C123	[O], [OI], [O2] terminal functions
A002	01, 03, 04, 05	B087	Stop key function
A019	00	A028 – A035	Multi-speed function
C001 – C008	02, 03, 04, 05		

Function Code	Data	Resulting Non-displayed Functions (when B37 = 01)	Notes
A044, A244	02	B100 – B113	Control methods
A051	01	A052 – A059	DC braking
A071	01	A072 – A076, C044	PID function
A094	01	A095 – A096	2-stage adjustable frequency
A294	01	A0295 – A296	
B013, B213, B313	02	B015 – B020	Electric thermal characteristic
B021	01, 02	B022, B023	Overload restriction
B024	01, 02	B025, B026	Overload restriction 2
B095	01, 02	B090 – B096	Dynamic braking function
C001 – C008	06	A038, A039	Jogging
	08	F202, F203, A203, A204, A220, A241 – A244, A261, A262, A292 – A296, B212, B213, H202 – H206, H220 – H224, H230 – H234, H250 – H252, H260	2nd motor control
	11	B088	Free-run stop
	17	F302, F303, A303, A304, A320, A342 – A344, A392, A393, B312, B313, H306	3rd motor control
	18	C102	Reset
	27, 28, 29	C101	UP/DWN
A044	00, 01	A041 – A043	Torque boost function
	04	H060	0Hz domain SLV limiter
A244	00, 01	A241 – A243	Torque boost function
	04	H260	0Hz SLV limiter
A044	03, 04, 05	B040 – B046, H001, H070 – H072, H002, H005, H020 – H024, H030 – H034, H050 – H052, H060	Vector control
A244	03, 04	B040 – B046, H001, H070 – H072, H202, H205, H220 – H224, H230 – H234, H250 – H252, H260	Vector control
A097	01, 02, 03	A131	Acceleration pattern constant
A098	01, 02, 03	A132	Deceleration pattern constant
B098	01, 02	B099, C085	Thermistor function
B050	01	B051 – B054	Instantaneous power failure
B120	01	B121 – B126	External brake control

Function Code	Data	Resulting Non-displayed Functions (when B37 = 01)	Notes
C021 – C025, C026	02, 06	C042, C043	Frequency arrival signal
	03	C040, C041	Overload advance notice
	07	C055 – C058	Over-torque
	21	C063	Zero-speed detection signal
	24, 25	C045, C046	Frequency arrival signal
	26	C011	Overload advance notice 2
H002	00	H020 – H024	Motor constant
	01, 02	H030 – H034	Motor constant (auto-tuning)
H202	00	H220 – H224	Motor constant
	01, 02	H023 – H0234	Motor constant (auto-tuning)
P010	01	P011 – P023, P025 – P027	Expansion card function

"B" Function			Run Mode Edit Lo Hi	Defaults			Units	SRW Display
Func. Code	Name	Description		–FE (EU)	–FU (US)	–FR (JP)		
B040	Torque limit selection	Five option codes: 00 4-quadrant mode 01 Selected by 2 input terminals (see p. 4–37) 02 From analog [O2] input (0 to 10V = 0 to 200%) 03 From expansion card 1 04 From expansion card 2	✘ ✔	00	00	00	—	>b040 TRQ-LIMIT Mode 4-SET
B041	Torque limit (1) (forward-driving in 4-quadrant mode)	Range is 0 to 200% (torque limit disabled)	✘ ✔	150.	150.	150.	%	>b041 RQ-LIMIT LEVEL1 150%
B042	Torque limit (2) (reverse-regenerating in 4-quadrant mode)	Range is 0 to 200% (torque limit disabled)	✘ ✔	150.	150.	150.	%	>b042 TRQ-LIMIT LEVEL2 150%
B043	Torque limit (3) (reverse-driving in 4-quadrant mode)	Range is 0 to 200% (torque limit disabled)	✘ ✔	150.	150.	150.	%	>b043 TRQ-LIMIT LEVEL3 150%
B044	Torque limit (4) (forward-regenerating in 4-quadrant mode)	Range is 0 to 200% (torque limit disabled)	✘ ✔	150.	150.	150.	%	>b044 TRQ-LIMIT LEVEL4 150%
B045	Torque limit LADSTOP enable	Temporarily stops accel/decel ramps during torque limit. Available for SLV, 0 Hz domain, or vector control with feedback mode. Two option codes: 00 Disable 01 Enable	✘ ✔	00	00	00	—	>b045 TRQ-LIMIT SELECT OFF

"B" Function			Run Mode Edit Lo Hi	Defaults			Units	SRW Display
Func. Code	Name	Description		–FE (EU)	–FU (US)	–FR (JP)		
B046	Reverse Run protection enable	Prohibits reverse motor rotation. Two option codes: 00 Disable 01 Enable	✘ ✔	00	00	00	—	>b046 LIMIT PREV OFF

Controlled Deceleration at Power Loss – When enabled, this feature permits the inverter to control final motor deceleration upon loss of inverter input power. First, you must make a wiring change to the inverter. See "Optional Controlled Decel and Alarm at Power Loss" on page 4–4 for complete instructions including wiring and signal timing diagrams for using the *controlled deceleration at power loss* feature.

After making the wiring change, use function B050 to enable the feature. Use B051 to determine the point at which a decaying DC bus voltage will trigger the controlled deceleration. Use parameter B054 to specify an initial step-wise deceleration at power loss, and B053 to specify the duration of the linear deceleration.

During the controlled deceleration the inverter itself acts as a load to decelerate the motor. With either a high-inertia load or a short deceleration time (or both), it is possible that the inverter impedance will not be low enough to continue linear deceleration and avoid an over-voltage condition on the DC bus. Use parameter B052 to specify a threshold for the over-voltage. In this case, the inverter pauses deceleration (runs at constant speed). When the DC bus decays again below the threshold, linear deceleration resumes. The pause/resume process will repeat as necessary until the DC bus energy is depleted (under-voltage condition occurs).

"B" Function			Run Mode Edit Lo Hi	Defaults			Units	SRW Display
Func. Code	Name	Description		–FE (EU)	–FU (US)	–FR (JP)		
B050	Controlled deceleration and stop on power loss	Allows inverter control using regenerative energy to decelerate after loss of input power (requires jumper change) Two option codes: 00 Disable 01 Enable	✘ ✘	00	00	00	—	>b050 IPS-DECEL Mode OFF
B051	DC bus voltage trigger level during power loss	Sets trigger for controlled deceleration and stop on power loss function. Range is 0.0 to 1000.V	✘ ✘	0.0	0.0	0.0	VDC	>b051 IPS-DECEL V1 0000.0Vdc
B052	Over-voltage threshold during power loss	Sets over-voltage threshold for controlled deceleration function. Range is 0.0 to 1000.V	✘ ✘	0.0	0.0	0.0	VDC	>b052 IPS-DECEL V2 0000.0Vdc
B053	Deceleration time setting during power loss	Range is 0.01 to 99.99 sec. / 100.0 to 999.9 sec. / 1000 to 3600 sec.	✘ ✘	1.00	1.00	1.00	sec.	>b053 IPS-DECEL TIME 0001.00s
B054	Initial output frequency decrease during power loss	Sets the initial decrease in output frequency upon power loss. Range is 0.00 to 10.00 Hz	✘ ✘	0.00	0.00	0.00	Hz	>b054 IPS-DECEL DEC-F 00.00Hz

Miscellaneous functions, continued...

B083: Carrier frequency adjustment – The internal *switching frequency* of the inverter circuitry (also called the *chopper frequency*). It is called the carrier frequency because the lower AC output frequency of the inverter "rides" the carrier. The faint, high-pitched sound you hear when the inverter is in Run Mode is characteristic of switching power supplies in general. The carrier frequency is adjustable from 500 Hz to 15 kHz (the upper limit varies, depending on the inverter rating). The audible sound decreases at the higher frequencies, but RFI noise and leakage current may be increased. Refer to the specification derating curves in Chapter 1 to determine the maximum allowable carrier frequency setting for your particular inverter and environmental conditions.



NOTE: When the inverter is in sensorless vector mode, use B083 to set the carrier frequency greater than 2.1 kHz for proper operation.



NOTE: The carrier frequency setting must stay within specified limits for inverter-motor applications that must comply with particular regulatory agencies. For example, a European CE-approved application requires the inverter carrier to be less than 5 kHz.

B084, B085: Initialization codes – These functions allow you to restore the factory default settings. Please refer to "Restoring Factory Default Settings" on page 6–9.

B086: Frequency display scaling – You can convert the output frequency monitor on D001 to a scaled number (engineering units) monitored at function D007. For example, the motor may run a conveyor that is monitored in feet per minute. Use this formula:

Scaled output frequency (D007) = Output frequency (D001) × Factor (B086)

"B" Function			Run Mode Edit Lo Hi	Defaults			Units	SRW Display
Func. Code	Name	Description		–FE (EU)	–FU (US)	–FR (JP)		
B080	[AM] terminal analog meter adjustment	Adjust 8-bit gain to analog meter connected to terminal [AM], range is 0 to 255	✔ ✔	180	180	180	—	>b080 AM-MONITOR ADJUST 180
B081	[FM] terminal analog meter adjustment	Adjust 8-bit gain to analog meter connected to terminal [FM], range is 0 to 255	✔ ✔	60	60	60	—	>b081 FM-MONITOR ADJUST 060
B082	Start frequency adjustment	Sets the starting frequency for the inverter output, range is 0.10 to 9.99 Hz	✘ ✔	0.50	0.50	0.50	Hz	>b082 fmin F 00.50Hz
B083	Carrier frequency setting	Sets the PWM carrier (internal switching frequency) Range is 0.5 to 15.0 kHz, or 0.5 to 10 kHz when derated	✘ ✔	5.0	5.0	5.0	kHz	>b083 CARRIER F 05.0kHz
B084	Initialization mode (parameters or trip history)	Select the type of initialization to occur, three option codes: 00 Trip history clear 01 Parameter initialization 02 Trip history clear and parameter initialization	✘ ✘	00	00	00	—	>b084 INITIAL MODE TRP

"B" Function			Run Mode Edit Lo Hi	Defaults			Units	SRW Display
Func. Code	Name	Description		–FE (EU)	–FU (US)	–FR (JP)		
B085	Country code for initialization	Select default parameter values for country on initialization, four option codes: 00 Japan version 01 Europe version 02 US version 03 reserved (do not set)	✘ ✘	01	02	00	—	>b085 INITIAL SELECT USA
B086	Frequency scaling conversion factor	Specify a constant to scale D007 to display in engineering units. Range is 0.1 to 99.9	✔ ✔	1.0	1.0	1.0	—	>b086 F-CONV Gain 001.0
B087	STOP key enable	Select whether the STOP key on the keypad is enabled (req. A002=01, 03, 04, or 05). Two option codes: 00 Enable 01 Disable	✘ ✔	00	00	00	—	>b087 STOP-SW SELECT ON

B091/B088: Stop Mode / Restart Mode Configuration – You can configure how the inverter performs a standard stop (each time Run FWD and REV signals turn OFF). Setting B091 determines whether the inverter will control the deceleration, or whether it will perform a free-run stop (coast to a stop). When using the free-run stop selection, it is imperative to also configure how you want the inverter to resume control of motor speed. Setting B088 determines whether the inverter will ensure the motor always resumes at 0 Hz, or whether the motor resumes from its current coasting speed (also called *frequency matching*). The Run command may turn OFF briefly, allowing the motor to coast to a slower speed from which normal operation can resume.

In most applications a controlled deceleration is desirable, corresponding to B091=00. However, applications such as HVAC fan control will often use a free-run stop (B091=01). This practice decreases dynamic stress on system components, prolonging system life. In this case, you will typically set B088=01 in order to resume from the current speed after a free-run stop (see diagram below, right). Note that using the default setting, B088=00, can cause trip events when the inverter attempts to force the load quickly to zero speed.

NOTE: Other events can cause (or be configured to cause) a free-run stop, such as power loss (see "Automatic Restart Mode and Phase Loss" on page 3–29), and inverter trip events in general (see "Miscellaneous Functions" on page 3–61). If all free-run stop behavior is important to your application (such as HVAC), be sure to configure each event accordingly.

Some additional parameters further configure all instances of a free-run stop. Parameter B003, Retry Wait Time Before Motor Restart, sets the minimum time the inverter will free-run. For example, if B003 = 4 seconds (and B091=01) and the cause of the free-run stop lasts 10 seconds, the inverter will free-run (coast) for a total of 14 seconds before driving the motor again. Parameter B007, Restart Frequency Threshold, sets the motor frequency at which the inverter will no longer resume and accelerate, instead resuming from 0 Hz (complete stop).

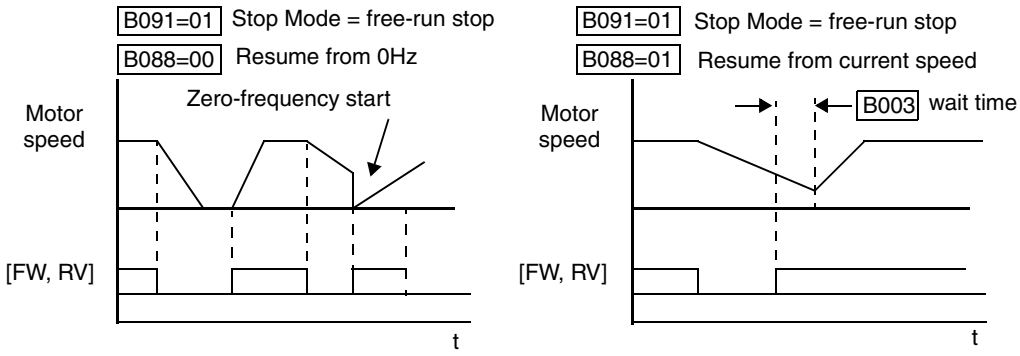

"B" Function			Run Mode Edit Lo Hi	Defaults			Units	SRW Display
Func. Code	Name	Description		–FE (EU)	–FU (US)	–FR (JP)		
B088	Restart mode after FRS	Selects how the inverter resumes operation when the free-run stop (FRS) is cancelled, two option codes: 00 Restart from 0Hz 01 Restart from frequency detected from actual speed of motor	✘ ✔	00	00	00	—	>b088 RUN FRS ZST

"B" Function			Run Mode Edit Lo Hi	Defaults			Units	SRW Display
Func. Code	Name	Description		–FE (EU)	–FU (US)	–FR (JP)		
B090	Dynamic braking usage ratio	Selects the braking duty cycle for the dynamic braking resistor (total brake % ON-time per 100 sec. interval). Range is 0.0 to 100.0% 0% Dynamic braking disabled >0% Enabled, per value	✘ ✔	00	00	00	—	>b090 BRD %ED 000.0%
B091	Stop mode selection	Selects how the inverter stops the motor, two option codes: 00 DEC (decelerate and stop) 01 FRS (free run to stop)	✘ ✘	00	00	00	—	>b091 RUN STOP DEC
B092	Cooling fan control (see note below)	Two option codes: 00 Fan always ON 01 Fan ON during RUN, OFF during STOP	✘ ✘	00	00	00	—	>b092 INITIAL FAN-CTL OFF
B095	Dynamic braking control	Three option codes: 00 Disable 01 Enable during RUN only 02 Enable always	✘ ✔	00	00	00	—	>b095 BRD Mode OFF
B096	Dynamic braking activation level	Range is: 330 to 380V (200V class), 660 to 760V (400V class)	✘ ✔	360/ 720	360/ 720	360/ 720	V	>b096 BRD LEVEL 360Vdc
B098	Thermistor for thermal protection control	Three option codes: 00 Disable 01 Enable-PTC thermistor 02 Enable-NTC thermistor	✘ ✔	00	00	00	—	>b098 THERM SELECT OFF
B099	Thermal protection level setting	Thermistor resistance threshold at which trip occurs. Range is 0.0 to 9999 Ohms	✘ ✔	3000	3000	3000	Ohms	>b099 THERM LEVEL 3000ohm

B090: Dynamic braking usage ratio – This parameter limits the amount of time the inverter can use the dynamic braking accessory device without entering the Trip Mode. Please refer to "Dynamic Braking" on page 5–6 for more information on dynamic braking accessories.



NOTE: When cooling fan control is enabled (B092=01) the inverter always turns the fan ON for 5 minutes immediately after powerup. This will cool the inverter in case the inverter / motor is still warm from prior running before a short power outage.

Free-setting V/f Pattern

The free-setting V/f inverter mode of operation uses voltage and frequency parameter pairs to define seven points on a V/f graph. This provides a way to define a multi-segment V/f curve that best suits your application.

The frequency settings do require that F1 ≤ F2 ≤ F3 ≤ F4 ≤ F5 ≤ F6 ≤ F7; their values must have this ascending order relationship. To satisfy this criterion during initial parameter editing, set F7 (B112) and work backwards when setting these values, since the defaults are all 0 Hz. However, the voltages V1 to V7 may either increase or decrease from one to the next. Therefore, you may set these parameters in any order.

"B" Function			Run Mode Edit Lo Hi	Defaults			Units	SRW Display
Func. Code	Name	Description		–FE (EU)	–FU (US)	–FR (JP)		
B100	Free-setting V/f frequency (1)	V/f point 1, frequency coordinate	✘ ✘	0.	0.	0.	Hz	>b101 FREE-V/F V1 000.0V
B101	Free-setting V/f voltage (1)	V.F point 1, voltage coordinate	✘ ✘	0.0	0.0	0.0	V	>b102 FREE-V/F F1 0000Hz
B102	Free-setting V/f frequency (2)	V/f point 2, frequency coordinate	✘ ✘	0.	0.	0.	Hz	>b103 FREE-V/F V2 000.0V
B103	Free-setting V/f voltage (2)	V.F point 2, voltage coordinate	✘ ✘	0.0	0.0	0.0	V	>b104 FREE-V/F F2 0000Hz
B104	Free-setting V/f frequency (3)	V/f point 3, frequency coordinate	✘ ✘	0.	0.	0.	Hz	>b105 FREE-V/F V3 000.0V
B105	Free-setting V/f voltage (3)	V.F point 3, voltage coordinate	✘ ✘	0.0	0.0	0.0	V	>b106 FREE-V/F F3 0000Hz
B106	Free-setting V/f frequency (4)	V/f point 4, frequency coordinate	✘ ✘	0.	0.	0.	Hz	>b107 FREE-V/F V4 000.0V
B107	Free-setting V/f voltage (4)	V.F point 4, voltage coordinate	✘ ✘	0.0	0.0	0.0	V	>b108 FREE-V/F F4 0000Hz
B108	Free-setting V/f frequency (5)	V/f point 5, frequency coordinate	✘ ✘	0.	0.	0.	Hz	>b109 FREE-V/F V5 000.0V
B109	Free-setting V/f voltage (5)	V.F point 5, voltage coordinate	✘ ✘	0.0	0.0	0.0	V	>b110 FREE-V/F F5 0000Hz
B110	Free-setting V/f frequency (6)	V/f point 6, frequency coordinate	✘ ✘	0.	0.	0.	Hz	>b111 FREE-V/F V6 000.0V
B111	Free-setting V/f voltage (6)	V.F point 6, voltage coordinate	✘ ✘	0.0	0.0	0.0	V	>b112 FREE-V/F F6 0000Hz
B112	Free-setting V/f frequency (7)	V/f point 7, frequency coordinate	✘ ✘	0.	0.	0.	Hz	>b113 FREE-V/F V7 000.0V
B113	Free-setting V/f voltage (7)	V.F point 7, voltage coordinate	✘ ✘	0.0	0.0	0.0	V	>b114 FREE-V/F F7 0000Hz

External Brake Control

The brake control function in the inverter controls external braking used in systems such as elevators. The purpose of this function is to ensure the inverter is powering the motor before releasing external brakes that would permit the load to move or coast. This function requires the configuration and wiring of intelligent input and output terminals. See "External Brake Control Function" on page 4–39 for more information.

"B" Function			Run Mode Edit Lo Hi	Defaults			Units	SRW Display
Func. Code	Name	Description		–FE (EU)	–FU (US)	–FR (JP)		
B120	Brake Control Enable	Two option codes: 00 Disable 01 Enable	✘ ✔	00	00	00	—	>b120 BRAKE Mode OFF
B121	Brake Wait Time for Release	Sets time delay between arrival at release frequency and the brake release signal. Range is 0.00 to 5.00 sec.	✘ ✔	0.00	0.00	0.00	sec.	>b121 BRAKE STA-WAIT 0.00s
B122	Brake Wait Time for Acceleration	Sets time delay after brake confirmation signal is received until the inverter begins acceleration Range is 0.00 to 5.00 sec.	✘ ✔	0.00	0.00	0.00	sec.	>b122 BRAKE ACC-WAIT 0.00s
B123	Brake Wait Time for Stopping	Sets time delay after brake confirmation signal turns OFF until decelerating the inverter to 0 Hz. Range is 0.00 to 5.00 sec.	✘ ✔	0.00	0.00	0.00	sec.	>b123 BRAKE STP-WAIT 0.00s
B124	Brake Wait Time for Confirmation	Sets the wait time for confirmation after turn ON/OFF of brake release. If confirmation is not received during the specified wait time, the inverter will trip with an external brake error. Range is 0.00 to 5.00 sec.	✘ ✔	0.00	0.00	0.00	sec.	>b124 BRAKE BRK-WAIT 0.00s
B125	Brake Release Frequency Setting	Sets the frequency at which the inverter will output the brake release signal after delay set by B121. Range is 0.00 to 99.99 / 100.0 to 400.0Hz	✘ ✔	0.00	0.00	0.00	Hz	>b125 BRAKE OPEN-F 000.00Hz
B126	Brake Release Current Setting	Sets the minimum inverter current level above which the brake release signal will be permitted. Range is 0% to 200% of rated current	✘ ✔	Rated current for each inverter model			A	>b126 BRAKE OPEN-A 00.16.5A

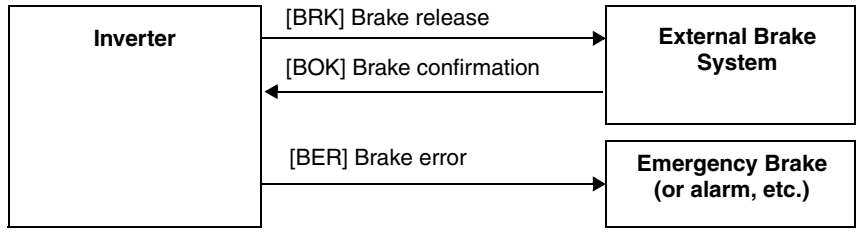

“C” Group: Intelligent Terminal Functions

The eight input terminals [**1**], [**2**], [**3**], [**4**], [**5**], [**6**], [**7**], and [**8**] can be configured for any of 44 different functions. The next two tables show how to configure the eight terminals. The inputs are logical, in that they are either OFF or ON. We define these states as OFF=0, and ON=1.

The inverter comes with default options for the eight terminals. These default settings are initially unique, each one having its own setting. Note that European and US versions have different default settings. You can use any option on any terminal, and even use the same option twice to create a logical OR (though usually not required).

Input Terminal Configuration

Functions and Options –The *function codes* in the following table let you assign one of 44 options to any of the eight logic inputs for the SJ300 inverters. The functions C001 through C008 configure the terminals [1] through [8] respectively. The “value” of these particular parameters is not a scalar value, but it is a discrete number that selects one option from many available *options*.

For example, if you set function C001=01, you have assigned option 01 (Reverse Run) to terminal [1]. The option codes and the specifics of how each one works are in Chapter 4.

“C” Function			Run Mode Edit Lo Hi	Defaults			Units	SRW Display
Func. Code	Name	Description		–FE (EU)	–FU (US)	–FR (JP)		
C001	Terminal [1] function	44 programmable functions available for terminals (see next section)	✘ ✔	18 [RS]	18 [RS]	18 [RS]	—	>C001 IN-TM 1 RS
C002	Terminal [2] function		✘ ✔	16 [AT]	16 [AT]	16 [AT]	—	>C002 IN-TM 2 AT
C003	Terminal [3] function		✘ ✔	06 [JG]	06 [JG]	06 [JG]	—	>C003 IN-TM 3 JG
C004	Terminal [4] function		✘ ✔	11 [FRS]	11 [FRS]	11 [FRS]	—	>C004 IN-TM 4 FRS
C005	Terminal [5] function		✘ ✔	09 [2CH]	09 [2CH]	09 [2CH]	—	>C005 IN-TM 5 2CH
C006	Terminal [6] function		✘ ✔	03 [CF2]	13 [USP]	03 [CF2]	—	>C006 IN-TM 6 USP
C007	Terminal [7] function		✘ ✔	02 [CF1]	02 [CF1]	02 [CF1]	—	>C007 IN-TM 7 CF1
C008	Terminal [8] function		✘ ✔	01 [RV]	01 [RV]	01 [RV]	—	>C008 IN-TM 8 RV

The input logic convention is programmable for each of the six inputs. Most inputs default to normally open (active high), but you can select normally closed (active low) in order to invert the sense of the logic.

"C" Function			Run Mode Edit Lo Hi	Defaults			Units	SRW Display
Func. Code	Name	Description		–FE (EU)	–FU (US)	–FR (JP)		
C011	Terminal [1] active state	Select logic convention, two option codes: 00 normally open N.O. 01 normally closed N.C.	✘ ✔	00	00	00	—	>C011 IN-TM O/C-1 NO
C012	Terminal [2] active state		✘ ✔	00	00	00	—	>C012 IN-TM O/C-2 NO
C013	Terminal [3] active state		✘ ✔	00	00	00	—	>C013 IN-TM O/C-3 NO
C014	Terminal [4] active state		✘ ✔	00	00	00	—	>C014 IN-TM O/C-4 NO
C015	Terminal [5] active state		✘ ✔	00	00	00	—	>C015 IN-TM O/C-5 NO
C016	Terminal [6] active state		✘ ✔	00	01	00	—	>C016 IN-TM O/C-6 NO
C017	Terminal [7] active state		✘ ✔	00	00	00	—	>C017 IN-TM O/C-7 NO
C018	Terminal [8] active state		✘ ✔	00	00	00	—	>C018 IN-TM O/C-8 NO
C019	Terminal [FW] active state		✘ ✔	00	00	00	—	>C019 IN-TM O/C-FW NO



NOTE: An input terminal configured for option code 18 ([RS] Reset command) cannot be configured for normally closed operation.

Intelligent Input Terminal Overview

Each of the eight intelligent terminals may be assigned any of the options in the following table. When you program one of the option codes for terminal assignments C001 to C008, the respective terminal assumes the function role of that option code. The terminal functions have a symbol or abbreviation, which we use to label a terminal using that function. For example the "Reverse Run" command is [RV]. The physical label on the terminal block connector is simply **1**, **2**, **3**, **4**, **5**, **6, 7, or 8**. However, schematic examples in this manual also use the terminal function symbol (such as [RV]) to show the assigned option. The option codes for C011 to C019 determine the active state of the logical input (active high or active low).

Summary Table - This table shows all forty-four intelligent input functions at a glance. Detailed descriptions of these functions, related parameters and settings, and example wiring diagrams are in "Using Intelligent Input Terminals" on page 4–11.

Input Function Summary Table

Option Code	Terminal Symbol	Function Name	Description	
01	RV	Reverse Run/Stop	ON	Inverter is in Run Mode, motor runs reverse
			OFF	Inverter is in Stop Mode, motor stops
02	CF1	Multi-speed select, Bit 0 (LSB)	ON	Binary encoded speed select, Bit 0, logical 1
			OFF	Binary encoded speed select, Bit 0, logical 0
03	CF2	Multi-speed select, Bit 1	ON	Binary encoded speed select, Bit 1, logical 1
			OFF	Binary encoded speed select, Bit 1, logical 0
04	CF3	Multi-speed select, Bit 2	ON	Binary encoded speed select, Bit 2, logical 1
			OFF	Binary encoded speed select, Bit 2, logical 0
05	CF4	Multi-speed select, Bit 3 (MSB)	ON	Binary encoded speed select, Bit 3, logical 1
			OFF	Binary encoded speed select, Bit 3, logical 0
06	JG	Jogging	ON	Inverter is in Run Mode, output to motor runs at jog parameter frequency A038
			OFF	Inverter is in Stop Mode
07	DB	External Signal for DC Injection Braking	ON	DC braking will be applied during deceleration
			OFF	DC braking will not be applied
08	SET	Set (select) 2nd Motor Data	ON	The inverter uses 2nd motor parameters for generating frequency output to motor
			OFF	The inverter uses 1st (main) motor parameters for generating frequency output to motor
09	2CH	2-stage Acceleration and Deceleration	ON	Frequency output uses 2nd-stage acceleration and deceleration values
			OFF	Frequency output uses standard acceleration and deceleration values
11	FRS	Free-run Stop	ON	Causes output to turn OFF, allowing motor to free run (coast) to stop
			OFF	Output operates normally, so controlled deceleration stops motor
12	EXT	External Trip	ON	When assigned input transitions OFF to ON, inverter latches trip event and displays E12
			OFF	No trip event for ON to OFF transition; any recorded trip events remain in history until Reset

Input Function Summary Table				
Option Code	**Terminal Symbol**	**Function Name**	**Description**	
13	USP	Unattended Start Protection	ON	On powerup, the inverter will not resume a Run command (mostly used in the US)
			OFF	On powerup, the inverter will resume a RUN command that was active before power loss
14	CS	Commercial Power Source	ON	OFF-to-ON transition signals the inverter that the motor is already running at powerup (via bypass), thus suppressing the inverter's motor output in Run Mode
			OFF	ON-to-OFF transition signals the inverter to apply a time delay (B003), frequency match its output to existing motor speed, and resume normal Run Mode operation
15	SFT	Software Lock	ON	The keypad and remote programming devices are prevented from changing parameters
			OFF	The parameters may be edited and stored
16	AT	Analog Input Voltage/ current Select	ON	If A005=00, terminal [OI] is enabled for input. If A005=01, terminal [O2] is enabled for input. (Use terminal [L] for signal return.)
			OFF	Terminal [O] is enabled for voltage input (Use terminal [L] for signal return)
17	SET3	Set (select) 3rd motor data	ON	The inverter uses 3rd motor parameters for generating frequency output to motor
			OFF	The inverter uses 1st (main) motor parameters for generating frequency output to motor
18	RS	Reset Inverter	ON	The trip condition is reset, the motor output is turned OFF, and powerup reset is asserted
			OFF	Normal power-on operation
20	STA	START (3-wire interface)	ON	Starts the motor rotation
			OFF	No change to present motor status
21	STP	STOP (3-wire interface)	ON	Stops the motor rotation
			OFF	No change to present motor status
22	F/R	FWD, REV (3-wire interface)	ON	Selects the direction of motor rotation: ON = FWD. While the motor is rotating, a change of F/R will start a deceleration, followed by a change in direction.
			OFF	Selects the direction of motor rotation: OFF =REV. While the motor is rotating, a change of F/R will start a deceleration, followed by a change in direction.
23	PID	PID Disable	ON	Temporarily disables PID loop control. Inverter output turns OFF as long as PID Enable is active (A071=1).
			OFF	Has no effect on PID loop operation, which operates normally if PID Enable is active (A071 = 1).

Input Function Summary Table				
Option Code	**Terminal Symbol**	**Function Name**	**Description**	
24	PIDC	PID Reset	ON	Resets the PID loop controller. The main consequence is that the integrator sum is forced to zero.
			OFF	No effect on PID loop controller
26	CAS	Control gain setting	ON	Selects alternate parameters H070 to H072 for the source of the internal speed loop gain
			OFF	Selects parameters H050 to H052 (or H250 to H252 for 2nd motor) for the source of internal speed loop gain
27	UP	Remote Control UP Function (motorized speed pot.)	ON	Accelerates (increases output frequency) motor from current frequency
			OFF	No change to output frequency
28	DWN	Remote Control DOWN Function (motorized speed pot.)	ON	Decelerates (decreases output frequency) motor from current frequency
			OFF	No change to output frequency
29	UDC	Remote Control Data Clearing	ON	Clears the UP/DWN frequency memory by forcing it to equal the set frequency parameter F001. Setting C101 must be set=00 to enable this function to work.
			OFF	UP/DWN frequency memory is not changed
31	OPE	Operator Control	ON	Forces the source of the output frequency setting (A001) and the source of the RUN command (A002) to be from the digital operator
			OFF	Source of output frequency set by (A001) and source of run command set by (A002) is used
32	SF1	Multispeed bit 1	ON	Logical 1
			OFF	Logical 0
33	SF2	Multispeed bit 2	ON	Logical 1
			OFF	Logical 0
34	SF3	Multispeed bit 3	ON	Logical 1
			OFF	Logical 0
35	SF4	Multispeed bit 4	ON	Logical 1
			OFF	Logical 0
36	SF5	Multispeed bit 5	ON	Logical 1
			OFF	Logical 0
37	SF6	Multispeed bit 6	ON	Logical 1
			OFF	Logical 0
38	SF7	Multispeed bit 7	ON	Logical 1
			OFF	Logical 0

Input Function Summary Table				
Option Code	**Terminal Symbol**	**Function Name**	**Description**	
39	OLR	Overload restriction	ON	Selects current overload parameter set 2 (B024, B025, B026)
			OFF	Selects current overload parameter set 1 (B021, B022, B023)
40	TL	Torque limit enable	ON	Enables torque limit feature
			OFF	Disables all torque limit sources. Defaults to 200% of inverter rated torque output.
41	TRQ1	Torque limit selection, bit 1 (LSB)	ON	Logical 1
			OFF	Logical 0
42	TRQ2	Torque limit selection, bit 2 (MSB)	ON	Logical 1
			OFF	Logical 0
43	PPI	Proportional / Proportional/Integral mode selection	ON	Selects Proportional-only control
			OFF	Selects Proportional-Integral control
44	BOK	Brake confirmation signal	ON	Indicates external brake has released (used only for external brake control function)
			OFF	Indicates the external brake has not yet released
45	ORT	Orientation (home search)	ON	The encoder is in the home (oriented) position
			OFF	The encoder position is not in the home position
46	LAC	LAC: LAD cancel	ON	Disables the Linear Accel / Decel (LAD) mode
			OFF	Normal Linear Accel / Decel mode
47	PCLR	Position deviation reset	ON	Clears the position deviation by setting the actual position equal to the desired position
			OFF	Position count operates normally
48	STAT	Pulse train position command input enable	ON	Enables the pulse train control of motor
			OFF	Disables pulse train control of motor
no	—	Not selected	ON	(input ignored)
			OFF	(input ignored)

Output Terminal Configuration

The inverter provides configuration for logic (discrete) and analog outputs, shown in the table below.

"C" Function			Run Mode Edit Lo Hi	Defaults			Units	SRW Display
Func. Code	Name	Description		–FE (EU)	–FU (US)	–FR (JP)		
C021	Terminal [11] function *	22 programmable functions available for logic (discrete) outputs (see next section)	✘ ✔	01 [FA1]	01 [FA1]	01 [FA1]	—	>C021 OUT-TM 11 FA1
C022	Terminal [12] function *		✘ ✔	00 [RUN]	00 [RUN]	00 [RUN]	—	>C022 OUT-TM 12 RUN
C023	Terminal [13] function *		✘ ✔	03 [OL]	03 [OL]	03 [OL]	—	>C023 OUT-TM 13 OL
C024	Terminal [14] function *		✘ ✔	07 [OTQ]	07 [OTQ]	07 [OTQ]	—	>C024 OUT-TM 14 OTQ
C025	Terminal [15] function		✘ ✔	08 [IP]	08 [IP]	08 [IP]	—	>C025 OUT-TM 15 IP
C026	Alarm relay terminal function		✘ ✔	05 [AL]	05 [AL]	05 [AL]	—	>C026 OUT-TM AL AL
C027	[FM] signal selection	8 programmable functions available for analog outputs (see after next section)	✘ ✔	00 output freq.	00 output freq.	00 output freq.	—	>C027 FM-MONITOR KIND A-F
C028	[AM] signal selection		✘ ✔	00 output freq.	00 output freq.	00 output freq.	—	>C028 AM-MONITOR KIND A-F
C029	[AMI] signal selection		✘ ✔	00 output freq.	00 output freq.	00 output freq.	—	>C029 AMI-MON KIND A-F



NOTE: *Terminals [11] – [13] or [11] – [14] are automatically configured as AC0 – AC2 or AC0 – AC3 when C62 is configured to enable alarm code output.

The output logic convention is programmable for terminals [11] – [15], and the alarm relay terminals. The open-collector output terminals [11] – [15] default to normally open (active low), but you can select normally closed (active high) for the terminals in order to invert the sense of the logic. You can invert the logical sense of the alarm relay output as well.

"C" Function			Run Mode Edit Lo Hi	Defaults			Units	SRW Display
Func. Code	Name	Description		–FE (EU)	–FU (US)	–FR (JP)		
C031	Terminal [11] active state	Select logic convention, two option codes: 00 normally open N.O. 01 normally closed N.C.	✘ ✔	00	00	00	—	>C031 OUT-TM O/C-11 NO
C032	Terminal [12] active state		✘ ✔	00	00	00	—	>C032 OUT-TM O/C-12 NO
C033	Terminal [13] active state		✘ ✔	00	00	00	—	>C033 OUT-TM O/C-13 NO
C034	Terminal [14] active state		✘ ✔	00	00	00	—	>C034 OUT-TM O/C-14 NO
C035	Terminal [15] active state		✘ ✔	00	00	00	—	>C035 OUT-TM O/C-15 NO
C036	Alarm relay terminal active state		✘ ✔	01	01	01	—	>C036 OUT-TM O/C-AL NC

Output Summary Table - This table shows all twenty-two functions for the logic output terminals [11] – [15] at a glance. Detailed function descriptions, related parameters, settings, and example wiring diagrams are in "Using Intelligent Output Terminals" on page 4–42.

Output Function Summary Table				
Option Code	Terminal Symbol	Function Name	Description	
00	RUN	Run signal	ON	Inverter is in Run Mode, motor running
			OFF	Inverter is in Stop Mode, motor stopped
01	FA1	Frequency arrival type 1 – constant speed	ON	when output to motor is at the standard set frequency F001
			OFF	when output to motor is not at the set frequency F001
02	FA2	Frequency arrival type 2 – over-frequency	ON	when output to motor is at or above the FA Threshold 1 (C042) during accel
			OFF	when the output to motor is below the FA Threshold 1 (C043) during decel
03	OL	Overload advance notice signal (1)	ON	when output current is more than the set Threshold 1 for the overload signal (set with C041)
			OFF	when output current is less than the set Threshold 1for the overload signal
04	OD	Output deviation for PID control	ON	when PID error is more than the set threshold for the deviation signal
			OFF	when PID error is less than the set threshold for the deviation signal
05	AL	Alarm signal	ON	when the alarm condition has been met and not reset
			OFF	when the alarm had not tripped since the previous power cycle or since the previous keypad reset

Output Function Summary Table				
Option Code	**Terminal Symbol**	**Function Name**	**Description**	
06	FA3	Frequency arrival type 3 – at frequency	ON	when output to motor is at the FA Threshold 1 (C042) during accel, or at C043 during decel
			OFF	when the output to motor is not at either the FA Threshold 1 (C042) during accel or at C043 during decel
07	OTQ	Over-torque signal	ON	when the over-torque feature is enabled and the motor is generating excess torque
			OFF	when the over-torque feature is disabled or the motor is not generating excess torque
08	IP	Instantaneous power failure signal	ON	when the inverter input power has decreased below the acceptable input voltage level
			OFF	when the inverter input power is within rated range
09	UV	Under-voltage signal	ON	when the inverter input power has decreased below the acceptable input voltage level
			OFF	when the inverter input power is within rated range
10	TRQ	In torque limit	ON	when the output torque exceeds level set for the particular torque/frequency quadrant in effect during operation
			OFF	when the output torque is less than the level set for the operating quadrant
11	RNT	Operation time over	ON	when the inverter Run time exceeds the limit set by Run/power-on warning time (B034)
			OFF	when the inverter Run time is less than the limit set by Run/power-on warning time (B034)
12	ONT	Plug-in time over	ON	when the inverter plug-in time exceeds the set limit
			OFF	when the inverter plug-in time is less than the limit
13	THM	Thermal alarm signal	ON	when the thermal limit for the motor is exceeded
			OFF	when the thermal limit is not exceeded
19	BRK	Brake release signal	ON	when the inverter signals the external braking system to release (open) its brake
			OFF	when the inverter is not driving the motor, and needs the external brake engaged
20	BER	Brake error signal	ON	when the output current is less than the set releasing current
			OFF	when the braking function is not in use, or when the output current to the motor is correct and it is safe to release the brake
21	ZS	Zero speed detect	ON	when the encoder pulses of the motor has stopped
			OFF	when motor rotation causes encoder pulses
22	DSE	Speed deviation maximum	ON	when the velocity error exceeds the error threshold defined for the encoder input
			OFF	when the velocity error is less than the error threshold defined for the encoder input

Output Function Summary Table				
Option Code	**Terminal Symbol**	**Function Name**	**Description**	
23	POK	Positioning completion	ON	when the load position is at the target
			OFF	when the load position is not yet at the target
24	FA4	Frequency arrival type 4 – over-frequency (2)	ON	when output to motor is at or above the FA threshold 2 (C045) during accel
			OFF	when the output to motor is below the FA threshold 2 (C046) during decel
25	FA5	Frequency arrival type 5 – at frequency (2)	ON	when output to motor is at the FA threshold 2 (C045) during accel, or at C046 during decel
			OFF	when the output to motor is not at either the FA threshold 2 (C045) during accel or at C046 during decel
26	OL2	Overload notice advance signal (2)	ON	when output current is more than the set Threshold 2 for the overload signal (set with C111)
			OFF	when output current is less than the set Threshold 2 for the overload signal

Analog Summary Table - The following table shows all eight functions available for assignment to the three analog output terminals [FM], [AM], [AMI] at a glance. Detailed descriptions, related parameters and settings, and example wiring diagrams are in "Analog Output Operation" on page 4–62.

Analog Output Function Summary Table			
Option Code	**Function Name**	**Description**	**Corresponding Signal Range**
00	Output frequency	Actual motor speed, represented by PWM signal	0 to max. frequency in Hz
01	Output current	Motor current (% of maximum rated output current), represented by PWM signal	0 to 200%
02	Output torque	Rated output torque	0 to 200%
03	Digital output frequency	Output frequency (available only at FM output)	0 to max. frequency in Hz
04	Output voltage	Rated output voltage to motor	0 to 100%
05	Input power	Rated input power	0 to 200%
06	Electronic thermal overload	Percentage of electronic overload attained	0 to 100%
07	LAD frequency	Internal ramp generator frequency	0 to max. frequency in Hz

Output Function Adjustment Parameters

The following parameters work in conjunction with the intelligent output function, when configured. The overload level parameter (C041) sets the motor current level at which the overload signal [OL] turns ON. The range of settings is from 0% to 200% of the rated current for the inverter. This function is for generating an early warning logic output, without causing either a trip event or a restriction of the motor current (those effects are available on other functions).

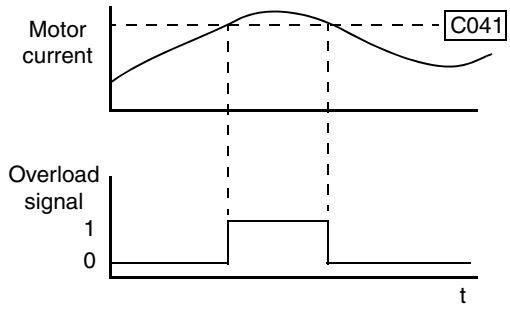

The frequency arrival signal, [FA1] to [FA5], is intended to indicate when the inverter output has reached (arrived at) the target frequency. You can adjust the timing of the leading and trailing edges of the signal via two parameters specific to acceleration and deceleration ramps, C042 and C043.

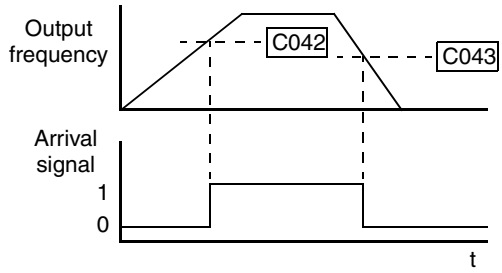

The Error for the PID loop is the magnitude (absolute value) of the difference between the Setpoint (desired value) and Process Variable (actual value). The PID output deviation signal [OD] (output terminal function option code 04) indicates when the error magnitude has exceeded a magnitude you define.

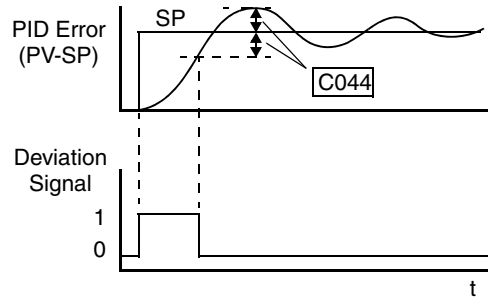

"C" Function			Run Mode Edit Lo Hi	Defaults			Units	SRW Display
Func. Code	Name	Description		–FE (EU)	–FU (US)	–FR (JP)		
C040	Overload signal output mode	Choose when the overload signal is enabled; two option codes: 00 During accel / decel / const. speed 01 During constant speed only	✘ ✔	01	01	01	—	>C040 OL Mode CRT
C041	Overload level setting 1	Range is 0.00 * rated current to 2.00 * rated current	✘ ✔	Rated current for each inverter			A	>C041 OL LEVEL 0016.5A
C042	Frequency arrival setting for acceleration	Sets the frequency arrival setting threshold for the output frequency during acceleration	✘ ✔	0.00	0.00	0.00	Hz	>C042 ARV ACC 0000.00Hz
C043	Arrival frequency setting for deceleration	Sets the frequency arrival setting threshold for the output frequency during deceleration	✘ ✔	0.00	0.00	0.00	Hz	>C043 ARV DEC 0000.00Hz

Call 1(800)985-6929 for Sales hitachiacdrive.com sales@hitachiacdrive.com

"C" Function			Run Mode Edit Lo Hi	Defaults			Units	SRW Display
Func. Code	Name	Description		–FE (EU)	–FU (US)	–FR (JP)		
C044	PID deviation level setting	Sets the PID loop error threshold |SP - PV| (absolute value) to trigger intelligent output [OD]. Range is 0.0 to 100%, resolution is 0.1%	✘ ✔	3.0	3.0	3.0	%	>C044 PID LEVEL 003.0%
C045	Frequency arrival setting for acceleration (2)	Range is 0.0 to 99.99 / 100.0 to 400.0 Hz	✘ ✔	0.00	0.00	0.00	Hz	>C045 ARV ACC2 0000.00Hz
C046	Frequency arrival setting for deceleration (2)	Range is 0.0 to 99.99 / 100.0 to 400.0 Hz	✘ ✔	0.00	0.00	0.00	Hz	>C046 ARV DEC2 0000.00Hz
C055	Over-torque (forward-driving) level setting	Threshold for intelligent output terminal [OTQ], quadrant I. Range is: 0 to 200%, up to –550xxx; 0 to 180%, –750 to 1500xxx	✘ ✔	100.	100.	100.	%	>C055 OV-TRQ FW-V 100%
C056	Over-torque (reverse regenerating) level setting	Threshold for intelligent output terminal [OTQ], quadrant II. Range is: 0 to 200%, up to –550xxx; 0 to 180%, –750 to 1500xxx	✘ ✔	100.	100.	100.	%	>C056 OV-TRQ RV-R 100%
C057	Over-torque (reverse driving) level setting	Threshold for intelligent output terminal [OTQ], quadrant III. Range is: 0 to 200%, up to –550xxx; 0 to 180%, –750 to 1500xxx	✘ ✔	100.	100.	100.	%	>C057 OV-TRQ RV-V 100%
C058	Over-torque (forward regenerating) level setting	Threshold for intelligent output terminal [OTQ], quadrant IV. Range is: 0 to 200%, up to –550xxx; 0 to 180%, –750 to 1500xxx	✘ ✔	100.	100.	100.	%	>C058 OV-TRQ FW-R 100%
C061	Electronic thermal warning level setting	Sets the threshold for intelligent output [THM]. Range is 0 to 100%	✘ ✔	80.	80.	80.	%	>C061 E-THM WARN 080%
C062	Alarm code output	Allows binary alarm codes to be output to intelligent terminals. Three option codes: 00 Disable 01 Enable – 3-bit code 02 Enable – 4-bit code	✘ ✔	00	00	00	—	>C062 AL-CODE SELECT OFF
C063	Zero speed detection level	Range is 0.00 to 99.99 / 100.0 Hz	✘ ✔	0.00	0.00	0.00	Hz	>C063 ZS LEVEL 000.00Hz

Call 1(800)985-6929 for Sales hitachiacdrive.com sales@hitachiacdrive.com

Serial Communications

The following table configures the communications port of the SJ300 inverter. You can have up to thirty-two devices on the serial communications network. The inverters are slaves and the computer or digital operator is the master. Thus, all inverters on the serial connection must use the same baud rate, data length, parity, and stop bits. However, each device on the serial network must have a unique node address. See "Serial Communications" on page B–1 for more information.

"C" Function			Run Mode Edit Lo Hi	Defaults			Units	SRW Display
Func. Code	Name	Description		–FE (EU)	–FU (US)	–FR (JP)		
C070	Data command method	Four option codes: 02 Digital operator 03 RS485 04 Expansion card #1 05 Expansion card #2	✘ ✘	02	02	02	—	>C070 PARAM SELECT REM
C071	Communication speed selection	Five option codes: 02 (Test) 03 2400bps 04 4800bps 05 9600bps 06 19200bps	✘ ✔	04	04	04	bps	>C071 RS485 BAU 4800bps
C072	Node allocation	Set the address of the inverter on the network. Range is 1 to 32.	✘ ✔	1.	1.	1.	—	>C072 RS485 ADDRESS 01
C073	Communication data length selection	Two option codes: 07 7-bit data 08 8-bit data	✘ ✔	7	7	7	—	>C073 RS485 BIT 7BIT
C074	Communication parity selection	Three option codes: 00 No parity 01 Even parity 02 Odd parity	✘ ✔	00	00	00	—	>C074 RS485 PARITY NO
C075	Communication stop bit selection	Two option codes: 01 1 stop bit 02 2 stop bits	✘ ✔	1	1	1	—	>C075 RS485 STOPBIT 1BIT
C078	Communication wait time	Time the inverter waits after receiving a message before it transmits. Range is 0.0 to 1000 ms	✘ ✔	0.	0.	0.	—	>C078 RS485 WAIT 0000ms

Analog Signal Calibration Settings

The functions in the following table configure the signals for the analog output terminals. Note that these settings do not change the current/voltage or sink/source characteristics – only the zero and span (scaling) of the signals.



NOTE: See additional settings for analog calibration: Parameter B080 [AM] Terminal Analog Meter Adjustment (gain), parameter B081 [FM] Terminal Analog Meter Adjustment (gain).

"C" Function			Run Mode Edit Lo Hi	Defaults			Units	SRW Display
Func. Code	Name	Description		–FE (EU)	–FU (US)	–FR (JP)		
C081	[O] input span calibration	Range is 0 to 65530	✔ ✔	Factory-calibrated			—	>C081 O-ADJUST TOP 02119
C082	[OI] input span calibration	Range is 0 to 65530	✔ ✔	Factory-calibrated			—	>C082 OI-ADJUST TOP 02512
C083	[O2] input span calibration	Range is 0 to 65530	✔ ✔	Factory-calibrated			—	>C083 O2-ADJUST TOP 02818
C085	Thermistor input tuning (gain)	Range is 0.0 to 1000	✔ ✔	105.0	105.0	105.0	—	>C085 THERM ADJUST 0105.0
C086	[AM] terminal offset tuning	Range is 0.0 to 10.0V	✔ ✔	0.0	0.0	0.0	V	>C086 AM-MONITOR OFFSET 00.0V
C087	[AMI] terminal meter tuning	Range is 0.0 to 250%	✔ ✔	80.	80.	80.	%	>C087 AMI-MON ADJUST 080
C088	[AMI] terminal offset tuning	Range is 0 to 20mA	✔ ✔	4.0	4.0	4.0	mA	>C088 AMI-MON OFFSET 04.0mA
C121	[O] input zero calibration	Range is 0 to 6553 (65530)	✔ ✔	Factory-calibrated			—	>C121 O-ADJUST ZERO 00000
C122	[OI] input zero calibration	Range is 0 to 6553 (65530)	✔ ✔	Factory-calibrated			—	>C122 OI-ADJUST ZERO 00000
C123	[O2] input zero calibration	Range is 0 to 6553 (65530)	✔ ✔	Factory-calibrated			—	>C123 O2-ADJUST ZERO 03622



NOTE: Settings C081, C082, C083, C121, C122, C123 are factory-calibrated for each inverter. Do not change these settings unless absolutely necessary. Note that if you restore factory defaults for all parameters, these settings will not change.

Miscellaneous Functions

The following table contains miscellaneous functions not in other function groups.

"C" Function			Run Mode Edit Lo Hi	Defaults			Units	SRW Display
Func. Code	Name	Description		–FE (EU)	–FU (US)	–FR (JP)		
C091	Debug mode enable	Two option codes: 00 No display 01 Display	✘ ✔	00	00	00	—	>C091 INITIAL DEBG OFF
C101	Up/Down memory mode selection	Controls speed setpoint for the inverter after power cycle. Two option codes: 00 Clear last frequency (return to default frequency F001) 01 Keep last frequency adjusted by UP/DWN	✘ ✔	00	00	00	—	>C101 UP/DWN DATA NO-STR

C102/C103: Reset Mode / Restart Mode – The reset mode selection, set via parameter C102, determines how the inverter responds to the [RS] intelligent input signal or keypad Stop/Reset key in a trip condition. The options allow you to cancel the trip on either the OFF-to-ON or ON-to-OFF transition of [RS], and if desired, stop the inverter if it is in Run Mode. A trip event causes the inverter output to the motor to turn OFF immediately. If in Run Mode when the trip occurred, the inverter and motor will enter free-run stop (coasting) operation. In some applications, the motor and load will still be coasting when the inverter returns to normal Run Mode operation. For that situation, you can configure the inverter output (C103=00) to resume operation from 0 Hz and accelerate normally. Or, you can configure the inverter (C103=01) to resume operation from the current speed of the motor (*frequency matching*)—often used in applications such as HVAC.

"C" Function			Run Mode Edit Lo Hi	Defaults			Units	SRW Display
Func. Code	Name	Description		–FE (EU)	–FU (US)	–FR (JP)		
C102	Reset mode selection	Determines response to Reset input [RST]. Three option codes: 00 Cancel trip state at input signal ON transition, Stops inverter if in Run Mode 01 Cancel trip state at signal OFF transition, Stops inverter if in Run Mode 02 Cancel trip state at input signal ON transition, no effect if in Run Mode.	✔ ✔	00	00	00	—	>C102 RESET SELECT ON
C103	Restart mode after reset	Two option codes: 00 Restart at 0 Hz 01 Resume operation after frequency matching	✘ ✔	00	00	00	—	>C103 RESET f-Mode ZST
C111	Overload setting (2)	Range is 0.00 times rated current to 2.00 times rated current	✘ ✔	Rated current for each inverter model			A	>C111 OL LEVEL2 0016.5A

"H" Group: Motor Constants Functions

Introduction

The "H" Group parameters configure the inverter for the motor characteristics. You must manually set H003 and H004 values to match the motor. Most of the remaining parameters are related to vector control, and are in use only when function A044 is set for one of the vector control modes as shown in the diagram. The procedure in "Auto-tuning of Motor Constants" on page 4–67 automatically sets all the parameters related to vector control. If you configure the inverter to use vector control, we highly recommend letting the auto-tuning procedure derive the values for you. If you want to reset the parameters to the factory default settings, use the procedure in "Restoring Factory Default Settings" on page 6–9.

Inverter Torque Control Algorithms

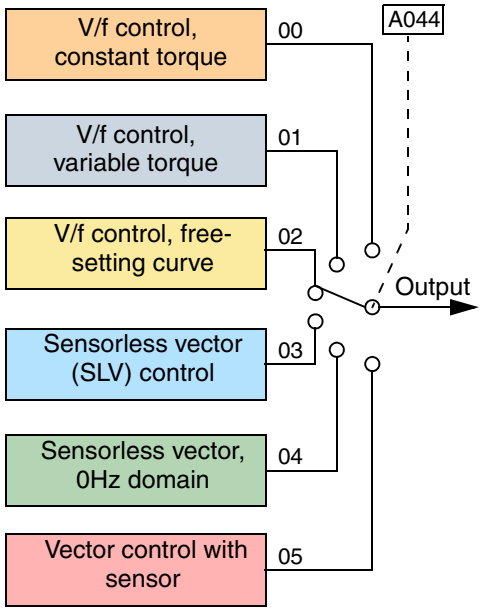

NOTE: The auto-tuning procedure and related warning messages are in "Auto-tuning of Motor Constants" on page 4–67. Please read these before trying to auto-tune the motor parameters.

"H" Function			Run Mode Edit Lo Hi	Defaults			Units	SRW Display
Func. Code	Name	Description		–FE (EU)	–FU (US)	–FR (JP)		
H001	Auto-tuning Setting	Three states for auto-tuning function, option codes: 00 Auto-tuning OFF 01 Auto-tune (measure motor resistance and inductance, without rotating) 02 Auto-tune (rotate motor)	✘ ✘	00	00	00	—	>H001 AUX AUTO NOR
H002	Motor data selection, 1st motor	Select one of three motor parameter sets, 3 options: 00 Standard motor data 01 Auto-tuning data 02 Adaptive tuning data	✘ ✘	00	00	00	—	>H002 AUX DATA NOR
H202	Motor data selection, 2nd motor	Select one of three motor parameter sets, 3 options: 00 Standard motor data 01 Auto-tuning data 02 Adaptive tuning data	✘ ✘	00	00	00	—	>H202 2AUX DATA NOR
H003	Motor capacity, 1st motor	Select 0.2 to 75.0kW for models up to –550xxx, 0.2 to 160.0kW for models –750xxx to –1500xxx	✘ ✘	Factory set			kW	>H003 AUX K 003.70kW

"H" Function			Run Mode Edit Lo Hi	Defaults			Units	SRW Display
Func. Code	Name	Description		–FE (EU)	–FU (US)	–FR (JP)		
H203	Motor capacity, 2nd setting	Select 0.2 to 75.0kW for models up to –550xxx, 0.2 to 160.0kW for models –750xxx to –1500xxx	✘ ✘	Factory set			kW	>H203 2AUX K 003.70kW
H004	Motor poles setting, 1st motor	Four selections: 2 / 4 / 6 / 8	✘ ✘	4	4	4	Poles	>H004 AUX P 4P
H204	Motor poles setting, 2nd motor	Four selections: 2 / 4 / 6 / 8	✘ ✘	4	4	4	Poles	>H204 2AUX P 4P
H005	Motor speed constant, 1st motor	Motor proportional gain constant (factory set), range is 0.01 to 99	✔ ✔	1.590	1.590	1.590	—	>H005 AUX KP 1.590
H205	Motor speed constant, 2nd motor	Motor proportional gain constant (factory set) range is 0 to 99	✔ ✔	1.590	1.590	1.590	—	>H205 2AUX KP 1.590
H006	Motor stabilization constant, 1st motor	Motor constant (factory set), range is 0 to 255	✔ ✔	100.	100.	100.	—	>H006 AUX KCD 00100
H206	Motor stabilization constant, 2nd motor	Motor constant (factory set), range is 0 to 255	✔ ✔	100.	100.	100.	—	>H206 2AUX KCD 00100
H306	Motor stabilization constant, 3rd motor	Motor constant (factory set), range is 0 to 255	✔ ✔	100.	100.	100.	—	>H306 3AUX KCD 00100
H020	Motor constant R1, 1st motor	Range is 0.000 to 65.53, 0.000 to 9.999 10.00 to 65.53	✘ ✘	According to inverter rating			Ohm	>H020 AUX R1 00.489ohm
H220	Motor constant R1, 2nd motor	Range is 0.000 to 65.53, 0.000 to 9.999 10.00 to 65.53	✘ ✘	According to inverter rating			Ohm	>H220 2AUX R1 00.000ohm
H021	Motor constant R2, 1st motor	Range is 0.000 to 65.53, 0.000 to 9.999 10.00 to 65.53	✘ ✘	According to inverter rating			Ohm	>H021 AUX R2 00.355ohm
H221	Motor constant R2, 2nd motor	Range is 0.000 to 65.53, 0.000 to 9.999 10.00 to 65.53	✘ ✘	According to inverter rating			Ohm	>H221 2AUX R2 00.355ohm
H022	Motor constant L, 1st motor	Range is 0.00 - 655.3 mH, 0.00 to 99.99 100.0 - 655.3	✘ ✘	According to inverter rating			mH	>H022 AUX L 005.12mH
H222	Motor constant L, 2nd motor	Range is 0.00 - 655.3 mH, 0.00 to 99.99 100.0 - 655.3	✘ ✘	According to inverter rating			mH	>H222 2AUX L 005.12mH
H023	Motor constant I_0, 1st motor	Range is 0.00 to 655.3 A 0.00 to 99.99 100.0 - 655.3	✘ ✘	According to inverter rating			A	>H023 AUX I0 008.02A
H223	Motor constant I_0, 2nd motor	Range is 0.00 to 655.3 A, 0.00 to 99.99 100.0 - 655.3	✘ ✘	According to inverter rating			A	>H223 2AUX I0 008.02A
H024	Motor Constant J, 1st motor	Ratio (unit-less), range is 1.0 to 1000	✘ ✘	According to inverter rating			—	>H024 AUX J 000.055

"H" Function			Run Mode Edit Lo Hi	Defaults			Units	SRW Display
Func. Code	Name	Description		–FE (EU)	–FU (US)	–FR (JP)		
H224	Motor constant J, 2nd motor	Ratio (unit-less), range is 1.0 to 1000	✘ ✘	According to inverter rating			—	>H224 2AUX J 000.055
H030	Auto-tuned motor constant R1, 1st motor	Auto-tuning data	✘ ✘	According to inverter rating			Ohm	>H030 AUX A-R1 00.489ohm
H230	Auto-tuned motor constant R1, 2nd motor	Auto-tuning data	✘ ✘	According to inverter rating			Ohm	>H230 2AUX A-R1 00.489ohm
H031	Auto-tuned motor constant R2, 1st motor	Auto-tuning data	✘ ✘	According to inverter rating			Ohm	>H031 AUX A-R2 00.355ohm
H231	Auto-tuned motor constant R2, 2nd motor	Auto-tuning data	✘ ✘	According to inverter rating			Ohm	>H231 2AUX A-R2 00.355ohm
H032	Auto-tuned motor constant L, 1st motor	Auto-tuning data	✘ ✘	According to inverter rating			mH	>H032 AUX A-L 005.12mH
H232	Auto-tuned motor constant L, 2nd motor	Auto-tuning data	✘ ✘	According to inverter rating			mH	>H232 2AUX A-L 005.12mH
H033	Auto-tuned motor constant I_0, 1st motor	Auto-tuning data	✘ ✘	According to inverter rating			A	>H033 AUX A-I0 008.02A
H233	Auto-tuned motor constant I_0, 2nd motor	Auto-tuning data	✘ ✘	According to inverter rating			A	>H233 2AUX A-I0 008.02A
H034	Auto-tuned motor constant J, 1st motor	Auto-tuning data	✘ ✘	According to inverter rating			—	>H034 AUX A-J 0000.055
H234	Auto constant J, 2nd motor	Auto-tuning data	✘ ✘	According to inverter rating			—	>H234 2AUX A-J 0000.055
H050	PI proportional gain for 1st motor	Range is 0.0 to 99.9 / 100.0 to 999.9 / 1000%	✔ ✔	100	100	100	%	>H050 AUX KSP 0100.0%
H250	PI proportional gain for 2nd motor	Range is 0.0 to 99.9 / 100.0 to 999.9 / 1000%	✔ ✔	100	100	100	%	>H250 2AUX KSP 0100.0%
H051	PI integral gain for 1st motor	Range is 0.0 to 99.9 / 100.0 to 999.9 / 1000%	✔ ✔	100	100	100	%	>H051 AUX KSI 0100.0%
H251	PI integral gain for 2nd motor	Range is 0.0 to 99.9 / 100.0 to 999.9 / 1000%	✔ ✔	100	100	100	%	>H251 2AUX KSI 0100.0%
H052	P proportional gain setting for 1st motor	Range is 0.00 to 10.00	✔ ✔	1.00	1.00	1.00	—	>H052 AUX KSPP 001.00
H252	P proportional gain setting for 2nd motor	Range is 0.00 to 10.00	✔ ✔	1.00	1.00	1.00	—	>H252 2AUX KSPP 001.00
H060	0Hz SLV limit for 1st motor	Range is 0.0 to 100.0%	✔ ✔	100.	100.	100.	%	>H060 AUX 0SLV-LMT 100.0%
H260	0Hz SLV limit for 2nd motor	Range is 0 to 100.0%	✔ ✔	100.	100.	100.	%	>H260 2AUX 0SLV-LMT 100.0%
H070	Terminal selection PI proportional gain setting	Range is 0 to 99.9 / 100.0 to 999.9 / 1000%	✔ ✔	100.0	100.0	100.0	%	>H070 AUX CH-KSP 0100.0%
H071	Terminal selection PI integral gain setting	Range is 0 to 99.9 / 100.0 to 999.9 / 1000%	✔ ✔	100.0	100.0	100.0	%	>H071 AUX CH-KSI 0100.0%
H072	Terminal selection P proportional gain setting	Range is 0.00 to 10.00	✔ ✔	1.00	1.00	1.00	—	>H072 AUX CH-KSPP 001.00

"P" Group: Expansion Card Functions

The two (optional) expansion cards for the SJ300 have associated configuration data. The following table defines the functions and their value ranges. Please refer to the expansion card manual for more details.

"P" Function			Run Mode Edit Lo Hi	Defaults			Units	SRW Display
Func. Code	Name	Description		–FE (EU)	–FU (US)	–FR (JP)		
P001	Operation mode on expansion card 1 error	Two option codes: 00 Trip (stop motor) 01 Continuous operation	✘ ✔	00	00	00	—	>P001 OPTION1 SELECT TRP
P002	Operation mode on expansion card 2 error	Two option codes: 00 Trip (stop motor) 01 Continuous operation	✘ ✔	00	00	00	—	>P002 OPTION2 SELECT TRP
P010	Feedback option enable	Two option codes: 00 Disable 01 Enable	✘ ✘	00	00	00	—	>P010 FEEDBACK SELECT OFF
P011	Encoder pulse-per-revolution (PPR) setting	Range is 128 to 65000 pulses per revolution	✘ ✘	1024	1024	1024	pulse	>P011 FEEDBACK ENC-P 01024Pls
P012	Control pulse setting	Selects between automatic speed regulation (ASR) and automatic position regulation (APR) modes. Two option codes: 00 ASR mode 01 APR mode	✘ ✘	00	00	00	—	>P012 FEEDBACK CONTROL ASR
P013	Pulse input mode setting	Pulse input mode setting. Three option codes: 00 quadrature 01 count and direction 02 separate forward and reverse pulse trains	✘ ✘	00	00	00	—	>P013 FEEDBACK PULSE MD0
P014	Home search stop position setting	Range is 0 to 4095 pulses	✘ ✔	0.	0.	0.	—	>P014 FEEDBACK POS 0000Pls
P015	Home search speed setting	Range is 0.00 to 99.99 / 100.0 to 120.0Hz	✘ ✔	5.00	5.00	5.00	Hz	>P015 FEEDBACK FC 005.00Hz
P016	Home search direction setting	Two option codes: 00 Forward 01 Reverse	✘ ✘	00	00	00	—	>P016 FEEDBACK TURN FW
P017	Home search completion range setting	Range is 0 to 10,000 pulses	✘ ✔	5	5	5	pulse	>P017 FEEDBACK L 00005Pls
P018	Home search completion delay time setting	Range is 0.00 to 9.99 seconds	✘ ✔	0.00	0.00	0.00	sec.	>P018 FEEDBACK TW 000.00s
P019	Electronic gear set position selection	Two option codes: 00 Position feedback side 01 Position command side	✘ ✔	00	00	00	—	>P019 FEEDBACK EGRP FB
P020	Electronic gear ratio numerator setting	Range is 1 to 9999	✘ ✔	1.	1.	1.	—	>P020 FEEDBACK EGR-N 00001
P021	Electronic gear ratio denominator setting	Range is 1 to 9999	✘ ✔	1.	1.	1.	—	>P021 FEEDBACK EGR-D 00001

"P" Function			Run Mode Edit Lo Hi	Defaults			Units	SRW Display
Func. Code	Name	Description		–FE (EU)	–FU (US)	–FR (JP)		
P022	Feed-forward gain setting	Range is 0.00 top 99.99 / 100.0	✘ ✔	0.00	0.00	0.00	—	>P022 FEEDBACK FFWG 000.00
P023	Position loop gain setting	Range is 0.00 to 99.99 / 100.0	✘ ✔	0.50	0.50	0.50	—	>P023 FEEDBACK G 000.50
P025	Temperature compensation thermistor enable	Allows for motor-mounted thermistor to calibrate output to motor temperature Two option codes: 00 Disable 01 Enable	✘ ✔	00	00	00	—	>P025 FEEDBACK R2-ADJ OFF
P026	Over-speed error detection level setting	Range is 0.0 to 150.0%	✘ ✔	135.0	135.0	135.0	%	>P026 FEEDBACK OSPD 135.0%
P027	Speed deviation error detection level setting	Range is 0.00 to 99.99 / 120Hz	✘ ✔	7.50	7.50	7.50	—	>P027 FEEDBACK NER 007.50Hz
P031	Accel/decel time input selection	Three options: 00 Inverter 01 Expansion card 1 02 Expansion card 2	✘ ✘	00	00	00	—	>P031 ACC/DEC SELECT REM
P032	Positioning command input selection	Three options: 00 Inverter 01 Expansion card 1 02 Expansion card 2	✘ ✔	00	00	00	—	>P032 P-SET SELECT REM
P044	DeviceNet comm watchdog timer	Range is 0.00 99.99 seconds	✘ ✘	1.00	1.00	1.00	—	>P044 DEVICENET TIMER 01.00s
P045	Inverter action on DeviceNet comm error	Five options: 00 Trip 01 Decelerate and trip 02 Hold last speed 03 Free run stop 04 Decelerate and stop	✘ ✘	01	01	01	—	>P045 DEVICENET T-OUT FTP
P046	DeviceNet polled I/O: Output instance number	Three settings: 20, 21, 100	✘ ✘	21	21	21	—	>P046 DEVICENET O-AS-INS 021
P047	DeviceNet polled I/O: Input instance number	Three settings: 70, 71, 101	✘ ✘	71	71	71	—	>P047 DEVICENET O-AS-INS 071
P048	Inverter action on DeviceNet idle mode	Five options: 00 Trip 01 Decelerate and trip 02 Hold last speed 03 Free run stop 04 Decelerate and stop	✘ ✘	01	01	01	—	>P048 DEVICENET IDLE FTP
P049	DeviceNet motor poles setting for RPM	Range is 00 to 38 (even numbers only)	✘ ✘	0	0	0	poles	>P049 DEVICENET P 00P



NOTE: Parameters P044 to P049 are available only in inverters with manufacturing code x8K xxxxxx xxxxx or later. The manufacturing code is printed on the product specifications labels, located on the front and side of the inverter housing.

“U” Group: User-selectable Menu Functions

The user-selectable menu functions allow you to configure (select) any twelve of the other functions in the inverter and place them together in a convenient list. This feature provides quick access for the most-used functions needed for your application. Each U Group function can serve as a pointer to any of the other parameters. You do *not* have to use the Store key to retain each association; just scroll to the desired standard parameter for each U Group function and leave it. The setting can point to a monitor-only parameter (such as D001), or point to editable parameters (such as A001). In the case of pointing to an editable functions, you use the Up/Down keys to change the value and the Store key to accept the change into memory—the same procedure as a normal parameter edit.

“U” Function			Run Mode Edit Lo Hi	Defaults			Units	SRW Display
Func. Code	Name	Description		–FE (EU)	–FU (US)	–FR (JP)		
U001	User-selected function	“no” (disabled), or any of the functions D001 to P049	✘ ✔	no	no	no	—	>U001 USER 1 no
U002			✘ ✔	no	no	no	—	>U002 USER 2 no
U003			✘ ✔	no	no	no	—	>U003 USER 3 no
U004			✘ ✔	no	no	no	—	>U004 USER 4 no
U005			✘ ✔	no	no	no	—	>U005 USER 5 no
U006			✘ ✔	no	no	no	—	>U006 USER 6 no
U007			✘ ✔	no	no	no	—	>U007 USER 7 no
U008			✘ ✔	no	no	no	—	>U008 USER 8 no
U009			✘ ✔	no	no	no	—	>U009 USER 9 no
U010			✘ ✔	no	no	no	—	>U010 USER 10 no
U011			✘ ✔	no	no	no	—	>U011 USER 11 no
U012			✘ ✔	no	no	no	—	>U012 USER 12 no



TIP: Function B037 selects which parameter groups are displayed. If you want to limit the displayed parameters to *only* the U Group functions, set B037=02.

Programming Error Codes

The SJ300 inverter operator keypad displays a special code (begins with the E character) to indicate a programming error. Programming errors exist when one parameter conflicts with the meaningful range permitted by related parameter(s). Note that particular real-time frequency (speed) input levels can cause a conflict in some situations. After a conflict exists, the error code will appear on the display, or you can view it later with D090 in Monitor Mode. Also, the PGM LED on the display will flash ON/OFF when programming. These indications are automatically cleared when the parameter is corrected to the allowed range.

Programming Error Code	Parameter out of bounds		Boundary defined by...		
	Code	Description	<, >	Code	Description
E001 E201	A061 / A261	Frequency upper limit setting; 1st, 2nd motor	>	A004 / A204 / A304	Maximum frequency; 1st, 2nd, 3rd motor
E002 E202	A062 / A262	Frequency lower limit setting; 1st, 2nd motor	>		
E004 E204 E304	A003 / A203 / A303	Base frequency setting; 1st, 2nd, 3rd motor	>		
E005 E205 E305	F001, A020 / A220 / A320	Output frequency setting, Multi-speed freq. setting; 1st, 2nd, 3rd motor	>		
E006 E206 E306	A021 to A035	Multi-speed freq. settings	>		
E012 E212	A062 / A262	Frequency lower limit setting; 1st, 2nd motor	>	A061 / A261	Frequency upper limit setting; 1st, 2nd motor
E015 E215	F001, A020 / A220	Output frequency setting, Multi-speed freq. setting; 1st, 2nd motor	>		
E016 E216	A021 to A035	Multi-speed freq. settings	>		
E021 E221	A061 / A261	Frequency upper limit setting; 1st, 2nd motor	<	A062 / A262	Frequency lower limit setting; 1st, 2nd motor
E025 E225	F001, A020 / A220	Output frequency setting, Multi-speed freq. setting; 1st, 2nd motor	<		
E031 E231	A061 / A261	Frequency upper limit setting; 1st, 2nd motor	<	B082	Start frequency adjustment
E032 E232	A062 / A262	Frequency lower limit setting; 1st, 2nd motor	<		
E035 E235 E335	F001, A020 / A220 / A320	Output frequency setting, Multi-speed freq. setting; 1st, 2nd, 3rd motor	<		
E036	A021 to A035	Multi-speed freq. settings	<		
E037	A038	Jog frequency setting	<		
E085 E285 E385	F001, A020 / A220 / A320	Output frequency setting, Multi-speed freq. setting; 1st, 2nd, 3rd motor	>f-x, <f+x	A063 ± A064 A065 ± A066 A067 ± A068	Jump (center) frequency ± jump (hysteresis) frequency width setting
E086	A021 to A035	Multi-speed freq. settings	>f-x, <f+x		(See note after table)

Programming Error Code	Parameter out of bounds		Boundary defined by...		
	Code	Description	<, >	Code	Description
E091 E291	A061 / A261	Frequency upper limit setting; 1st, 2nd motor	>	B112	Free-setting V/f frequency (7)
E092 E292	A062 / A262	Frequency lower limit setting; 1st, 2nd motor	>		
E095 E295	F001, A020 / A220	Output frequency setting, Multi-speed freq. setting; 1st, 2nd motor	>		
E096	A021 to A035	Multi-speed freq. settings	>		
E110	B100, B102, B104, B106, B108, B110	Free V/f frequency	>		
	B102, B104, B106, B108, B110	Free V/f frequency	>	B100	Free-setting V/f frequency (1)
	B100	Free V/f frequency	<	B102	Free-setting V/f frequency (2)
	B104, B106, B108, B110	Free V/f frequency	>		
	B100, B102	Free V/f frequency	<	B104	Free-setting V/f frequency (3)
	B106, B108, B110	Free V/f frequency	>		
	B100, B102, B104	Free V/f frequency	<	B106	Free-setting V/f frequency (4)
	B108, B110	Free V/f frequency	>		
	B100, B102, B104, B106	Free V/f frequency	<	B108	Free-setting V/f frequency (5)
	B110	Free V/f frequency	>		
	B100, B102, B104, B106, B108	Free V/f frequency	<	B110	Free-setting V/f frequency (6)
E120	B017, B019	Free-setting electronic thermal frequency	<	B015	Free-setting, electronic thermal frequency (1)
	B015	Free-setting electronic thermal frequency	>	B017	Free-setting, electronic thermal frequency (2)
	B019	Free-setting electronic thermal frequency	<		
	B015, B017	Free-setting electronic thermal frequency	>	B019	Free-setting, electronic thermal frequency (3)



NOTE: Set frequency (speed) values are not permitted to be inside the jump frequency ranges, if defined. When a frequency reference value from a real-time source (such as keypad potentiometer or analog input) are inside a jump frequency range, the actual speed is automatically forced to equal the lowest point of the jump range.

Operations and Monitoring

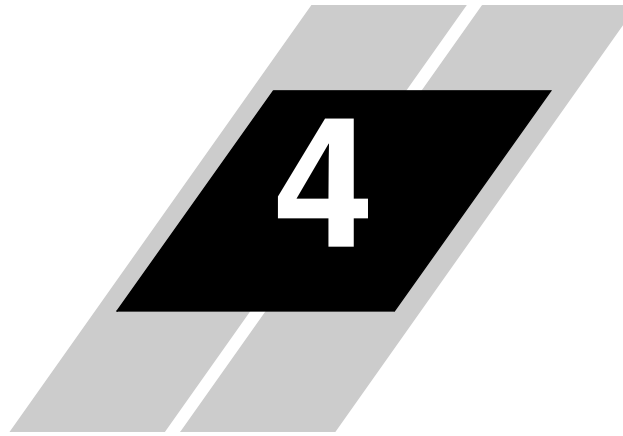

In This Chapter.... page

— Introduction 2
— Optional Controlled Decel and Alarm at Power Loss 4
— Connecting to PLCs and Other Devices 7
— Using Intelligent Input Terminals 11
— Using Intelligent Output Terminals 42
— Analog Input Operation 59
— Analog Output Operation 62
— Setting Motor Constants for Vector Control 65
— PID Loop Operation 71
— Configuring the Inverter for Multiple Motors 72

Call 1(800)985-6929 for Sales hitachiacdrive.com sales@hitachiacdrive.com

Introduction

The previous material in Chapter 3 gave a reference listing of all the programmable functions of the inverter. We suggest that you first scan through the listing of inverter functions to gain a general familiarity. This chapter will build on that knowledge in the following ways:

1. **Related functions** – Some parameters interact with or depend on the settings in other functions. This chapter lists "required settings" for a programmable function to serve as a cross-reference and an aid in showing how functions interact.
2. **Intelligent terminals** – Some functions rely on an input signal from control logic terminals or generate output signals in other cases.
3. **Electrical interfaces** – This chapter shows how to make connections between the inverter and other electrical devices.
4. **Auto-tuning** – The SJ300 inverter has the ability to run a calibration procedure in which it takes measurements of the motor's electrical characteristics. This chapter shows how to run the auto-tuning procedure to help the inverter run the motor more smoothly and efficiently.
5. **PID Loop Operation** – The SJ300 has a built-in PID loop that calculates the optimal inverter output frequency to control an external process. This chapter shows the parameters and input/output terminals associated with PID loop operation.
6. **Multiple motors** – A single SJ300 inverter may be used with two or more motors in some types of applications. This chapter shows the electrical connections and inverter parameters involved in multiple-motor applications.

The topics in this chapter can help you decide the features that are important to your application, and how to use them. The basic installation covered in Chapter 2 concluded with the powerup test and running the motor. Now, this chapter starts from that point and shows how to make the inverter part of a larger control or automation system.

Cautions for Operating Procedures

Before continuing, please read the following Caution messages.



CAUTION: The heat sink fins will have a high temperature. Be careful not to touch them. Otherwise, there is the danger of getting burned.



CAUTION: The operation of the inverter can be easily changed from low speed to high speed. Be sure check the capability and limitations of the motor and machine before operating the inverter. Otherwise, it may cause injury to personnel.



CAUTION: If you operate a motor at a frequency higher than the inverter standard default setting (50Hz/60Hz), be sure to check the motor and machine specifications with the respective manufacturer. Only operate the motor at elevated frequencies after getting their approval. Otherwise, there is the danger of equipment damage.

Call 1(800)985-6929 for Sales hitachiacdrive.com sales@hitachiacdrive.com

Warnings for Operating Procedures

Before continuing, please read the following Warning messages.



WARNING: Be sure to turn ON the input power supply only after closing the front case. While the inverter is energized, be sure not to open the front case. Otherwise, there is the danger of electric shock.



WARNING: Be sure not to operate electrical equipment with wet hands. Otherwise, there is the danger of electric shock.



WARNING: While the inverter is energized, be sure not to touch the inverter terminals even when the motor is stopped. Otherwise, there is the danger of electric shock.



WARNING: If the Retry Mode is selected, the motor may suddenly restart after a trip stop. Be sure to stop the inverter before approaching the machine (be sure to design the machine so that safety for personnel is secure even if it restarts.) Otherwise, it may cause injury to personnel.



WARNING: If the power supply is cut OFF for a short period of time, the inverter may restart operation after the power supply recovers if the Run command is active. If a restart may pose danger to personnel, so be sure to use a lock-out circuit so that it will not restart after power recovery. Otherwise, it may cause injury to personnel.



WARNING: The Stop Key is effective only when the Stop function is enabled. Be sure to enable the Stop Key separately from the emergency stop. Otherwise, it may cause injury to personnel.



WARNING: During a trip event, if the alarm reset is applied and the Run command is present, the inverter will automatically restart. Be sure to apply the alarm reset only after verifying the Run command is OFF. Otherwise, it may cause injury to personnel.



WARNING: Be sure not to touch the inside of the energized inverter or to put any conductive object into it. Otherwise, there is a danger of electric shock and/or fire.



WARNING: If power is turned ON when the Run command is already active, the motor will automatically start and injury may result. Before turning ON the power, confirm that the RUN command is not present.



WARNING: When the Stop key function is disabled, pressing the Stop key does not stop the inverter, nor will it reset a trip alarm.



WARNING: Be sure to provide a separate, hard-wired emergency stop switch when the application warrants it.

Optional Controlled Decel and Alarm at Power Loss

With the default SJ300 inverter configuration, a sudden power loss will cause the inverter to shut down immediately. If running at the time, the motor and load will coast to a stop. And without power, the inverter's alarm output will not activate. This default performance may be fine for applications with loads such as fans and pumps. However, some loads may require controlled decelerations upon power loss, or you may want an alarm signal upon power loss. This section describes how to harness regenerative energy so that the motor/load actually powers the inverter long enough to control a final deceleration and power the alarm output.

The diagram below shows the default configuration. Chapter 2 covered wiring the power source to the inverter input and the inverter output to the motor. By default, the inverter's internal control circuit gets its power from two phases (R and T) from the input. The user-accessible 2-wire jumper (R–R0 and T–T0) connects input power to the control circuit.

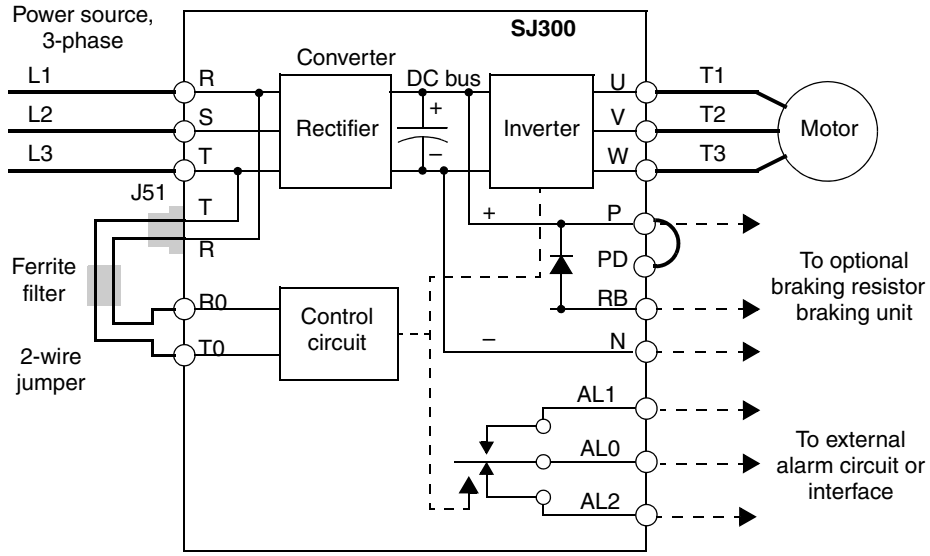

To provide power to the control circuit after input power loss, you must change the control circuit wiring as shown below (steps provided on following page).

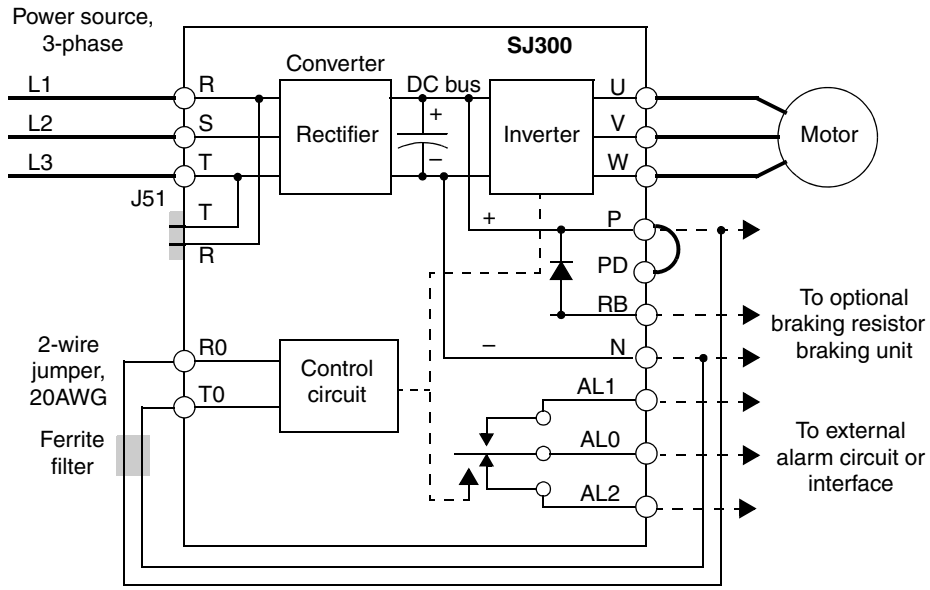

Follow the steps to implement the wiring change shown in the previous diagram.

1. Remove the 2-wire jumper J51 (terminals [R0] and [T0] to connector J51).
2. Procure several inches of multi-strand 20 AWG ($0.5mm^2$) or slightly heavier wire.
3. Connect a wire to terminal [R0] that is long enough to connect to terminal [P] (do not connect to [P] yet).
4. Connect a wire to terminal [T0] that is long enough to connect to terminal [N] (do not connect to [N] yet).
5. Remove the ferrite filter from the original jumper wire and then slide it onto the new wires connecting to terminals [R0] and [T0]. (Be sure to save the original jumper in a safe place.)
6. Connect the wire from [R0] to [P], and connect the wire from [T0] to [N] as shown.

More information on power loss related alarm functions, see "Instantaneous Power Failure / Under-voltage Signal" on page 4–51.

The following table lists the functions related to the controlled deceleration at power loss feature. After making the wiring change, use function B050 to enable the feature. Use B051 to determine the point at which a decaying DC bus voltage will trigger the controlled deceleration. Use parameter B054 to specify an initial step-wise deceleration at power loss, and B053 to specify the duration of the linear deceleration. Note that this feature also affects the output signals that indicate instantaneous power fail and under-voltage conditions (see "Instantaneous Power Failure / Under-voltage Signal" on page 4–51).

Func. Code	Name	Description	Range
B050	Controlled deceleration and stop on power loss	Allows inverter control using regenerative energy to decelerate after loss of input power (requires jumper change)	Two option codes: 00Disable 01Enable
B051	DC bus voltage trigger level during power loss	Sets trigger for controlled deceleration and stop on power loss function	0.0 to 1000.V
B052	Over-voltage threshold during power loss	Sets over-voltage threshold for controlled deceleration function	0.0 to 1000.V
B053	Deceleration time setting during power loss	Deceleration time inverter uses only at power loss	0.01 to 99.99 sec. / 100.0 to 999.9 sec. / 1000 to 3600 sec.
B054	Initial output frequency decrease during power loss	Sets the initial decrease in output frequency upon power loss	0.00 to 10.00 Hz

The timing diagram below shows a power loss scenario and the related parameter settings. During the controlled deceleration the inverter itself acts as a load to decelerate the motor. With either a high-inertia load or a short deceleration time (or both), it is possible that the inverter impedance will not be low enough to continue linear deceleration and avoid an over-voltage condition on the DC bus. Use parameter B052 to specify a threshold for the over-voltage. In this case, the inverter pauses deceleration (runs at constant speed). When the DC bus decays again below the threshold, linear deceleration resumes. The pause/resume process will repeat as necessary until the DC bus energy is depleted (under-voltage condition occurs).

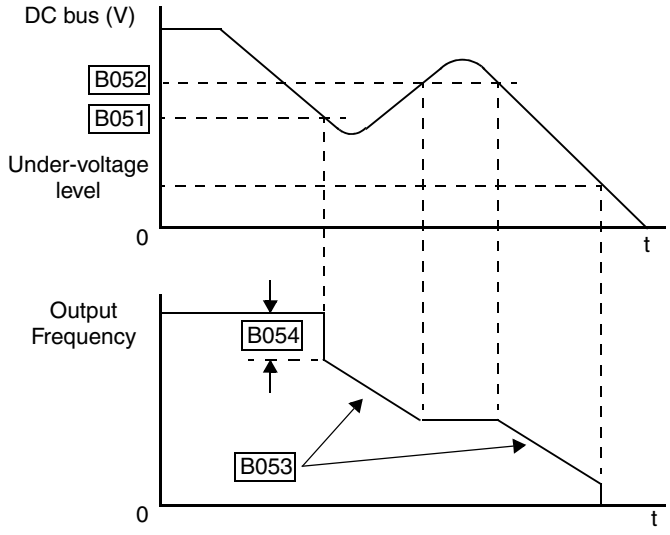

NOTE: (1) Be sure to set the *over-voltage threshold* greater than the *DC bus voltage trigger level* (B052 > B051) for proper operation.
(2) Once the power loss deceleration function starts, it will complete and stop the motor even if input power is restored. In that case, it automatically enables the Run mode again.

Connecting to PLCs and Other Devices

Hitachi inverters (drives) are useful in many types of applications. During installation, the inverter keypad (or other programming device) will facilitate the initial configuration. After installation, the inverter will generally receive its control commands through the control logic terminals or serial interface from another controlling device. In a simple application such as single-conveyor speed control, a Run/Stop switch and potentiometer will give the operator all the required control. In a sophisticated application, you may have a *programmable logic controller* (PLC) as the system controller with several connections to the inverter.

It is not possible to cover all the possible types of application in this manual. It will be necessary for you to know the electrical characteristics of the devices you want to connect to the inverter. Then, this section and the following sections on I/O terminal functions can help you quickly and safely connect those devices to the inverter.

CAUTION: It is possible to damage the inverter or other devices if your application exceeds the maximum current or voltage characteristics of a connection point.

The connections between the inverter and other devices rely on the electrical input/output characteristics at both ends of each connection, shown in the diagram to the right. The inverter can accept either sourcing or sinking type inputs from an external device (such as a PLC). A terminal jumper configures the input type, connecting the input circuit *common* to the supply (+) or (–). Detailed wiring examples are in "Using Intelligent Input Terminals" on page 4–11. This chapter shows the inverter's internal electrical component(s) at each I/O terminal and how to interface them with external circuits.

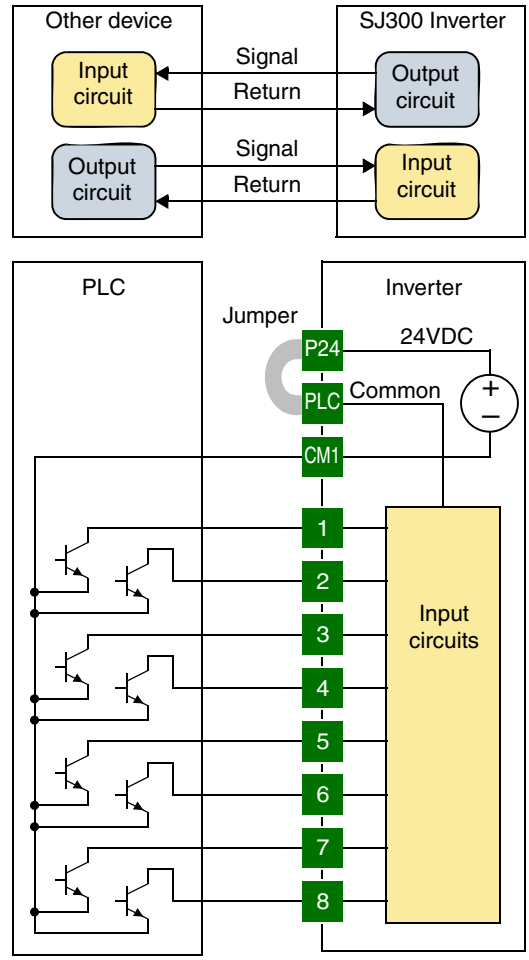

In order to avoid equipment damage and get your application running smoothly, we recommend drawing a schematic of each connection between the inverter and the other device. Include the internal components of each device in the schematic, so that it makes a complete circuit loop.

After making the schematic, then:

1. Verify that the current and voltage for each connection is within the operating limits of each device.
2. Make sure that the logic sense (active high or active low) of any ON/OFF connection is correct.
3. Verify inputs are configured correctly (sink/source) to interface to interface to any external devices (PLCs, etc.).
4. Check the zero and span (curve end points) for analog connections, and be sure the scale factor from input to output is correct.
5. Understand what will happen at the system level if any particular device suddenly loses power, or powers up after other devices.

Example Wiring Diagram

The schematic diagram below provides a general example of logic connector wiring, in addition to basic power and motor wiring covered in Chapter 2. The goal of this chapter is to help you determine the proper connections for the various terminals shown below for your specific application needs.

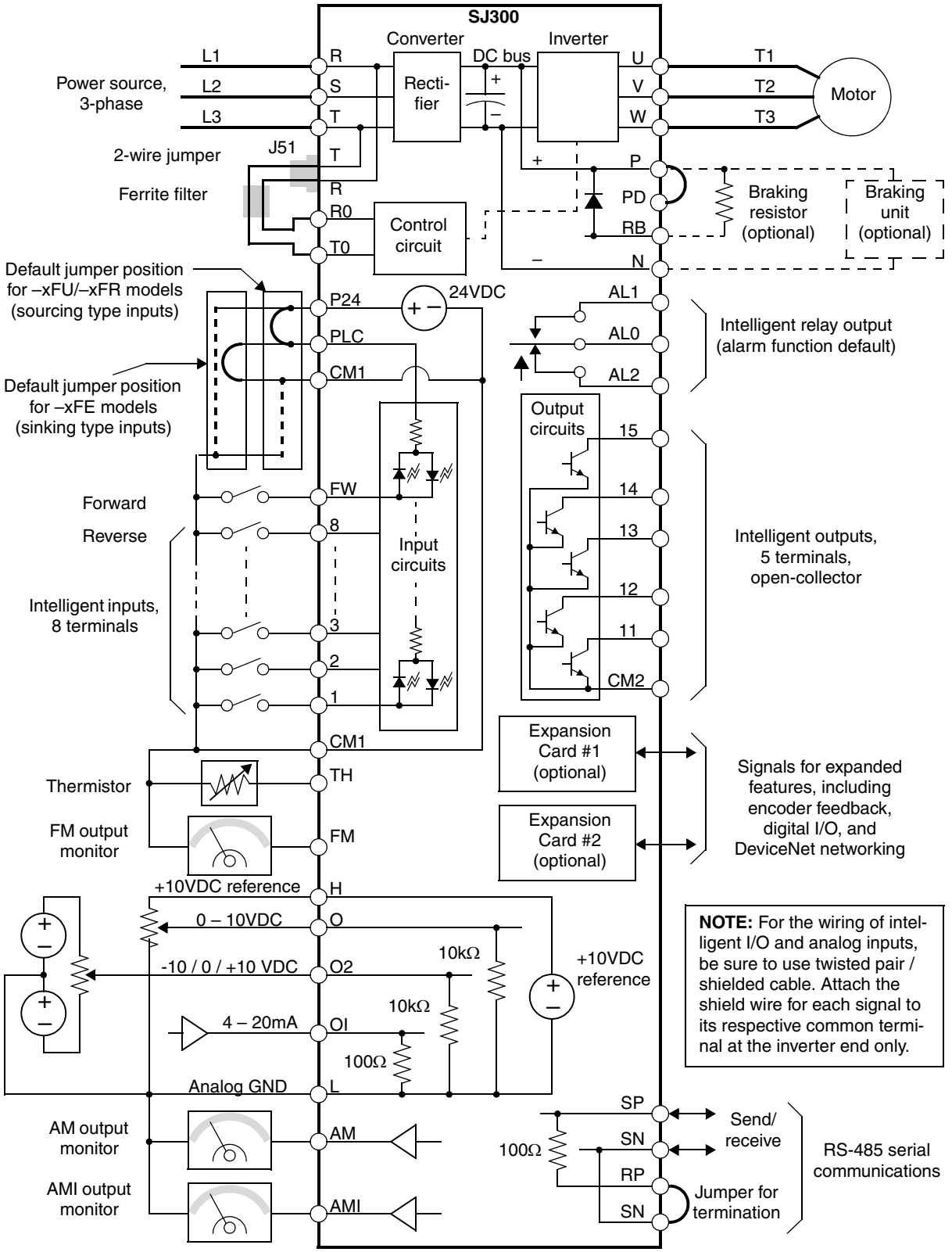

NOTE: For the wiring of intelligent I/O and analog inputs, be sure to use twisted pair / shielded cable. Attach the shield wire for each signal to its respective common terminal at the inverter end only.

Operations and Monitoring

Specifications of Control and Logic Connections

The control logic connector board is removable for wiring convenience as shown below (first, remove two retaining screws). The small connector to the left is for serial communications.

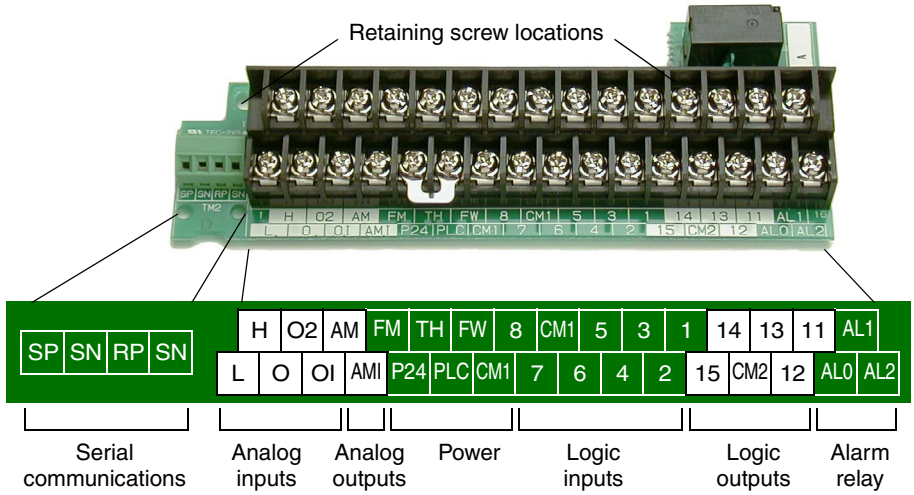

Specifications for the logic connection terminals are in the following table:

Terminal Name	Description	Ratings and Notes
[P24]	+24V power for inputs	24VDC supply, 100 mA max.
[CM1]	+24V common	Common for 24V supply, [FW], [TH], inputs [1] to [8], and [FM]. (Note: Do not ground)
[PLC]	Common for logic inputs	Common for input terminals [1] to [8], jumper to CM1 for sinking, jumper to P24 for sourcing
[CM2]	Common for logic outputs	Common for output terminals [11] to [15]
[1], [2], [3], [4], [5], [6], [7], [8]	Intelligent (programmable) discrete logic inputs	27VDC max. (use [P24] or an external supply referenced to terminal [CM1]), 4.7kΩ input impedance
[FW]	Forward/stop command	27VDC max. (use [P24] or an external supply referenced to terminal [CM1]), 4.7kΩ input impedance
[11], [12], [13], [14], [15]	Intelligent (programmable) discrete logic outputs	Open collector type, 50mA max. ON state current, 27 VDC maximum OFF state voltage
[TH]	Thermistor input	Reference to [CM1], min. thermistor power 100mW
[FM]	PWM output	0 to 10VDC, 1.2 mA max., 50% duty cycle
[AM]	Voltage analog output	0 to 10VDC, 2 mA max.
[AMI]	Current analog output	4-20 mA, nominal load impedance 250Ω
[L]	Common for analog inputs	Sum of [OI], [O], and [H] currents (return)
[OI]	Analog input, current	4 to 19.6 mA range, 20 mA nominal, 100Ω input impedance
[O]	Analog input, voltage	0 to 9.6 VDC range, 10VDC nominal, 12VDC max., input impedance 10 kΩ
[O2]	Analog input, voltage 2	–9.6 to 9.6 VDC range, ±10VDC nominal, ±12VDC max., input impedance 10 kΩ
[H]	+10V analog reference	10VDC nominal, 10 mA max.
[AL0]	Relay common contact	Contacts AL0–AL1, maximum loads: 250VAC, 2A; 30VDC, 8A resistive load 250VAC, 0.2A; 30VDC, 0.6A inductive load Contacts AL0–AL2, maximum loads: 250VAC, 1A; 30VDC 1A max. resistive load 250VAC, 0.2A; 30VDC, 0.2A max. inductive load Min. loads: 100 VAC, 10mA; 5VDC, 100mA
[AL1]	Relay contact, normally closed	
[AL2]	Relay contact, normally open	

Terminal Listing

Use the following table to locate pages for intelligent input and output material in this chapter.

Intelligent INPUTS				Intelligent OUTPUTS			
Symbol	**Code**	**Name**	**Page**	**Symbol**	**Code**	**Name**	**Page**
RV	01	Reverse Run/Stop	4–12	RUN	00	Run signal	4–43
CF1	02	Multi-speed select, Bit 0 (LSB)	4–13	FA1	01	Freq. arrival type 1 – constant speed	4–44
CF2	03	Multi-speed select, Bit 1	4–13				
CF3	04	Multi-speed select, Bit 2	4–13	FA2	02	Freq. arrival type 2 – over-frequency	4–44
CF4	05	Multi-speed select, Bit 3 (LSB)	4–13				
JG	06	Jogging	4–16	OL	03	Overload advance notice signal	4–46
DB	07	External signal for DC injection braking	4–17	OD	04	Output deviation for PID control	4–47
				AL	05	Alarm signal	4–48
SET	08	Set (select) second motor data	4–18	FA3	06	Freq. arrival type 3 – at freq.	4–44
2CH	09	2-stage accel and decel	4–19	OTQ	07	Over-torque signal	4–50
FRS	11	Free-run stop	4–20	IP	08	Instantaneous power failure signal	4–51
EXT	12	External trip	4–21	UV	09	Under-voltage signal	4–51
USP	13	Unattended start protection	4–22	TRQ	10	In torque limit signal	4–54
CS	14	Commercial power source	4–23	RNT	11	Run time over	4–54
SFT	15	Software lock	4–25	ONT	12	Power-ON time over	4–54
AT	16	Analog input voltage/current sel.	4–26	THM	13	Thermal alarm signal	4–55
SET3	17	Set (select) 3rd motor data	4–18	BRK	19	Brake release signal	4–58
RS	18	Reset inverter	4–27	BER	20	Brake error signal	4–58
STA	20	Start (3-wire interface)	4–29	ZS	21	Zero speed detect	4–58
STP	21	Stop (3-wire interface)	4–29	DSE	22	Speed deviation maximum	4–58
F/R	22	FW, RV (3-wire interface)	4–29	POK	23	Positioning completion	4–58
PID	23	PID ON/OFF	4–30	FA4	24	Freq. arrival type 4 – over-frequency (2)	4–44
PIDC	24	PID Reset	4–30				
CAS	26	Control gain setting	4–31	FA5	25	Freq. arrival type 5 – at frequency (2)	4–44
UP	27	Remote control Up func.	4–33				
DWN	28	Remote control Down func.	4–33	OL2	26	Overload advance notice signal (2)	4–46
UDC	29	Remote control data clearing	4–33				
OPE	31	Operator control	4–34				
SF1–7	32–38	Multi-speed bits 1 to 7	4–13				
OLR	39	Overload restriction	4–35				
TL	40	Torque limit enable	4–37				
TRQ1	41	Torque limit select, bit 1 (LSB)	4–37				
TRQ2	42	Torque limit select, bit 2 (MSB)	4–37				
PPI	43	P / PI mode selection	4–31				
BOK	44	Brake confirmation signal	4–39				
ORT	45	Orientation (home search)	4–41				
LAC	46	LAC: LAD cancel	4–41				
PCLR	47	Position deviation reset	4–41				
STAT	48	Pulse train position cmd enable	4–41				

Using Intelligent Input Terminals

Intelligent terminals [1], [2], [3], [4], [5], [6], [7], and [8] are identical, programmable inputs for general use. The input circuits can use the inverter's internal (isolated) +24V field supply (P24) to power the inputs. The input circuits connect internally to [PLC] as a common point. To use the internal supply to power the inputs, use the jumper as shown. Remove the jumper to use an external supply, or to interface to a PLC system (or other) that has solid state outputs. If you use an external supply or PLC system, its power return must connect to the [PLC] terminal on the inverter to complete the input circuit.

Input Wiring Examples

The following four input configurations are available to interface the inverter inputs to switches or the outputs of another system, such as a PLC.

Sinking inputs, internal supply

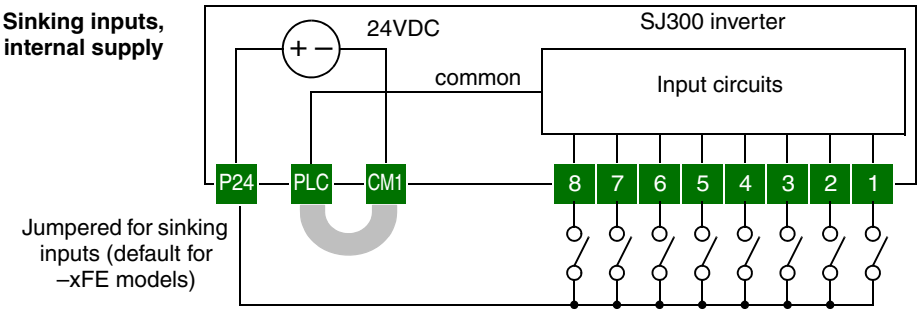

Sourcing inputs, internal supply

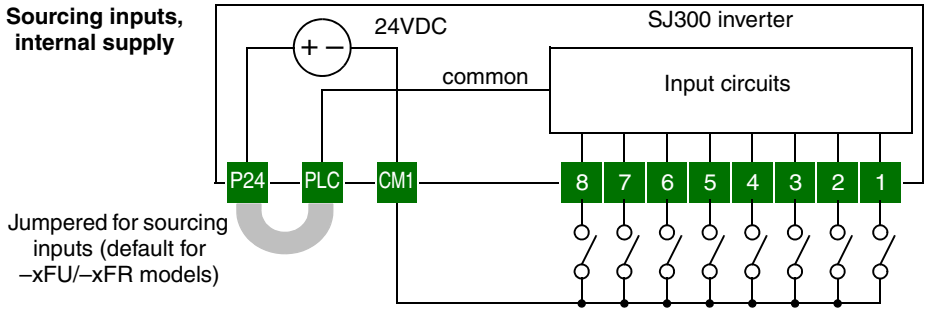

Sinking inputs, external supply

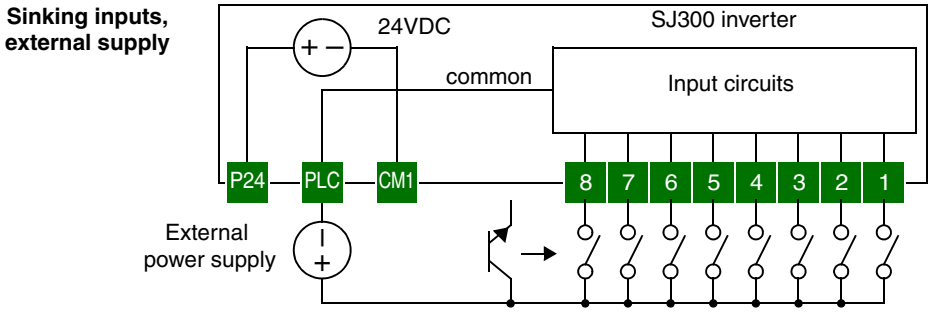

Sourcing inputs, external supply

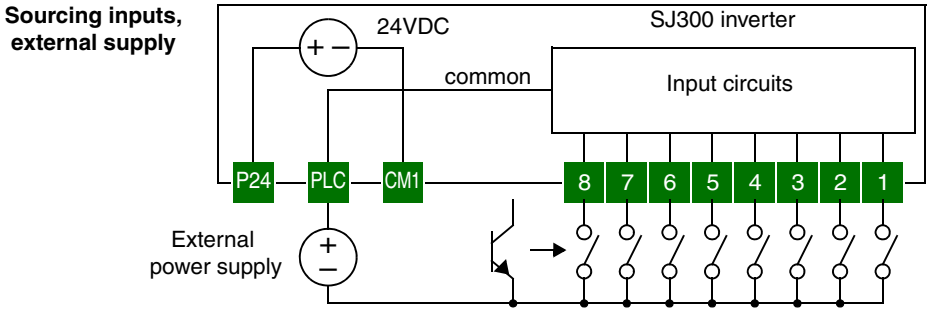

Wiring Diagram Conventions

The input wiring diagrams in this chapter are examples only. Default and non-default input terminal assignments are noted throughout; your particular assignments may be different. The wiring diagrams show the –xFU/–xFR model default [P24]–[PLC] jumper position (U.S./Jpn versions), as shown below on the left. The common (return) for inputs is [CM1] in this case. The diagram on the right shows the default jumper position and example input wiring for –xFE models (Europe version). For this case, the common (return) for inputs is [P24]. **Be sure the jumper position and return terminal used match your application wiring needs.**

–xFU/–xFR models (U.S./Jpn versions):

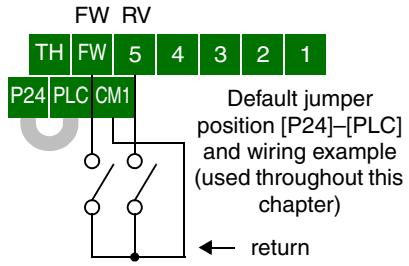

–xFE models (Europe version):

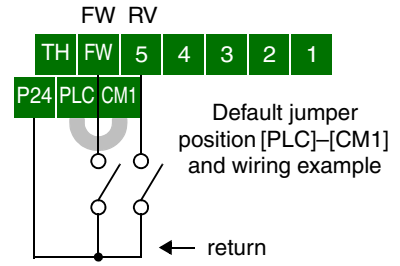

Forward Run/ Stop and Reverse Run/Stop Commands

When you input the Run command via the dedicated terminal [FW], the inverter executes the Forward Run command (high) or Stop command (low). When you input the Run command via the programmable terminal [RV], the inverter executes the Reverse Run command (high) or Stop command (low).

Opt. Code	Symbol	Function Name	State	Description
—	FW	Forward Run/Stop	ON	Inverter is in Run Mode, motor runs forward
			OFF	Inverter is in Stop Mode, motor stops
01	RV	Reverse Run/Stop	ON	Inverter is in Run Mode, motor runs reverse
			OFF	Inverter is in Stop Mode, motor stops

Valid for inputs:	C001, C002, C003, C004, C005, C006, C007, C008	Example: (Default input configuration shown—see page 3–47. Jumper position shown is for –xFU/-xFR models; for –xFE models, see examples above.)
Required settings:	A002 = 01	

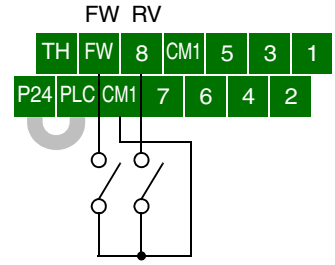

See I/O specs on page 4–9.

Notes:

- When the Forward Run and Reverse Run commands are active at the same time, the inverter enters the Stop Mode.
- When a terminal associated with either [FW] or [RV] function is configured for *normally closed*, the motor starts rotation when that terminal is disconnected or otherwise has no input voltage.

NOTE: The parameter F004, Keypad Run Key Routing, determines whether the single Run key issues a Run FWD command or Run REV command. However, it has no effect on the [FW] and [RV] input terminal operation.

WARNING: If the power is turned ON and the Run command is already active, the motor starts rotation and is dangerous! Before turning power ON, confirm that the external Run command is not active.

Multi-Speed Select

The inverter can store up to 16 different fixed target frequencies (speeds) in parameters A020 to A035. Binary inputs select the speed through four of the intelligent terminals configured as binary-encoded inputs CF1 to CF4 per the table. These can be any of the eight inputs, and in any order. You can use fewer inputs if you need eight or fewer speeds.

Multi-speed	Input Function				Multi-speed	Input Function			
	CF4	CF3	CF2	CF1		CF4	CF3	CF2	CF1
Speed 0	0	0	0	0	Speed 8	1	0	0	0
Speed 1	0	0	0	1	Speed 9	1	0	0	1
Speed 2	0	0	1	0	Speed 10	1	0	1	0
Speed 3	0	0	1	1	Speed 11	1	0	1	1
Speed 4	0	1	0	0	Speed 12	1	1	0	0
Speed 5	0	1	0	1	Speed 13	1	1	0	1
Speed 6	0	1	1	0	Speed 14	1	1	1	0
Speed 7	0	1	1	1	Speed 15	1	1	1	1

NOTE: When choosing a subset of speeds to use, always start at the top of the table, and with the least-significant bit: CF1, CF2, etc.

The example with eight speeds in the figure below shows how input switches configured for CF1 – CF3 functions can change the motor speed in real time.

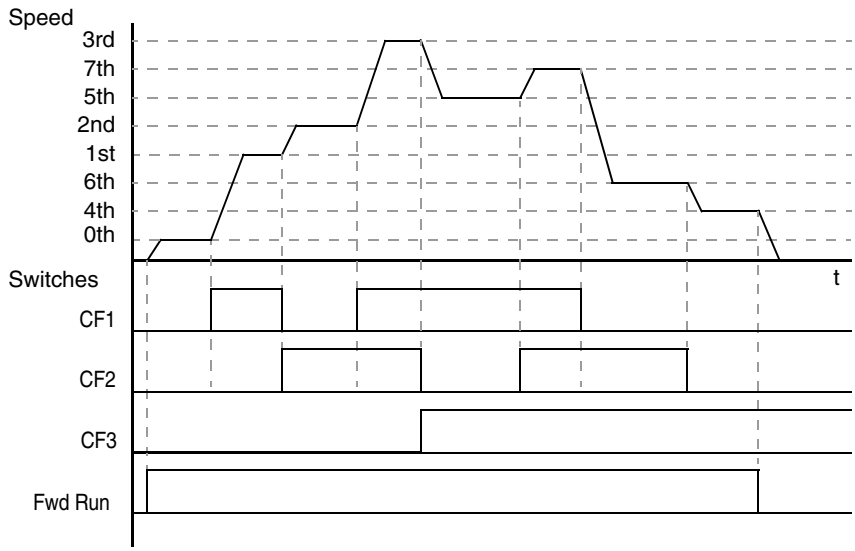

Multi-speed Override Feature - The multi-speed function can selectively override the external analog speed reference input. When the Frequency Source Setting parameter A001=01, the control terminal inputs determine the output frequency. At the same time, the inverter can use multi-speed select for output frequency if one or more intelligent inputs are configured as a CF type (CF1 to CF4). When all CF input(s) are OFF, the control terminal input determines the output frequency normally. When one or more CF input(s) are ON, then the corresponding multi-speed setting (see the table above) overrides and becomes the output frequency.

Opt. Code	Symbol	Function Name	Input State	Description
02	CF1	Binary speed select, Bit 0 (LSB)	ON	Bit 0, logical 1
			OFF	Bit 0, logical 0
03	CF2	Binary speed select, Bit 1	ON	Bit 1, logical 1
			OFF	Bit 1, logical 0
04	CF3	Binary speed binary select, Bit 2	ON	Bit 2, logical 1
			OFF	Bit 2, logical 0
05	CF4	Binary speed select, Bit 3 (MSB)	ON	Bit 3, logical 1
			OFF	Bit 3, logical 0

Valid for inputs:	C001, C002, C003, C004, C005, C006, C007, C008
Required settings:	F001, A020 to A035 A019=00

Notes:

- When programming the multi-speed settings, be sure to press the Store key each time and then set the next multi-speed setting. Note that when the Store key is not pressed, no data will be set.
- When a multi-speed setting more than 50Hz(60Hz) is to be set, it is necessary to program the maximum frequency A004 high enough to allow that speed.

Example: (Some CF inputs require input configuration; some are default inputs—see page 3–47. Jumper position shown is for –xFU/-xFR models; for –xFE models, see page 4–12.)

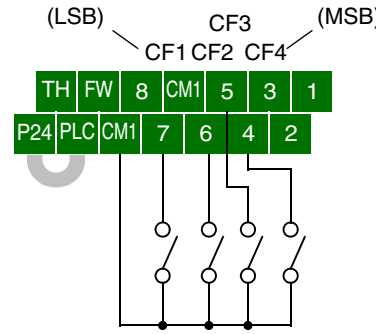

See I/O specs on page 4–9.

While using the multi-speed capability, you can monitor the output frequency with monitor function D001 during each segment of a multi-speed operation.
There are two ways to program the speeds into the registers A020 to A035:

1. Standard keypad programming:
   - **a.** Select each parameter A020 to A035.
   - **b.** Press the FUNC. key to view the parameter value.
   - **c.** Use the ∧ and ∨ keys to edit the value.
   - **d.** Use the STR key to save the data to memory.
2. Programming using the CF switches:
   - **a.** Turn the Run command OFF (Stop Mode).
   - **b.** Turn inputs ON to select desired Multi-speed. Display the value of F001 on the digital operator.
   - **c.** Set the desired output frequency by pressing the ∧ and ∨ keys.
   - **d.** Press the STR key once to store the set frequency. When this occurs, F001 indicates the output frequency of the selected Multi-speed.
   - **e.** Press the FUNC. key once to confirm that the indication is the same as the set frequency.
   - **f.** Repeat operations in 2. a) to 2. e) to set the frequency of other Multi-speeds. It can be set also by parameters A020 to A035 in the first procedure 1. a) to 1. d).

The Bit Operation method of speed control uses up to seven intelligent inputs to select from up to eight speeds. Since the all-switches-OFF combination selects the first speed, you only need N-1 switches to select N speeds. With Bit Operation speed control, only one input is normally active at a time. If multiple switches are ON, the lower numbered input takes precedence (determines the speed). The table and figure below show how the input combinations work.

Multi-speed	Input Function						
	SF7	SF6	SF5	SF4	SF3	SF2	SF1
Speed 0	0	0	0	0	0	0	0
Speed 1	—	—	—	—	—	—	1
Speed 2	—	—	—	—	—	1	0
Speed 3	—	—	—	—	1	0	0
Speed 4	—	—	—	1	0	0	0
Speed 5	—	—	1	0	0	0	0
Speed 6	—	1	0	0	0	0	0
Speed 7	1	0	0	0	0	0	0

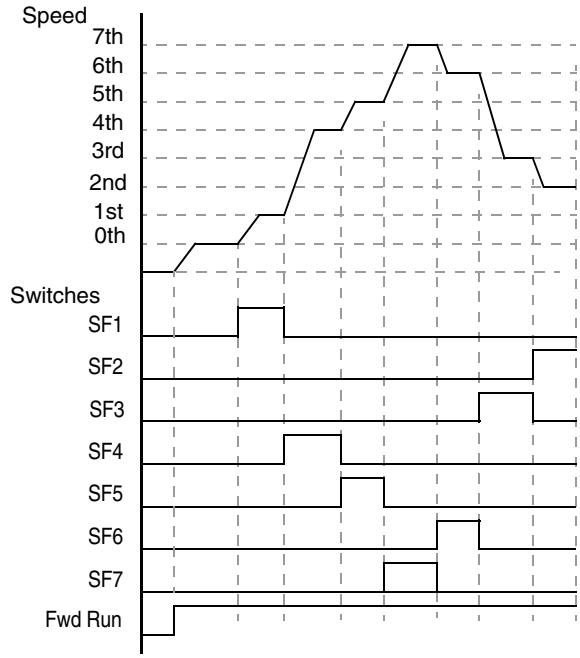

The following table lists the option codes for assigning [SF1 to [SF7] to the intelligent inputs.

Opt. Code	Symbol	Function Name	Description
32	SF1	Bit-level speed select 1	Bit-level speed select, Bit 0
33	SF2	Bit-level speed select 2	Bit-level speed select, Bit 1
34	SF3	Bit-level speed select 3	Bit-level speed select, Bit 2
35	SF4	Bit-level speed select 4	Bit-level speed select, Bit 3
36	SF5	Bit-level speed select 5	Bit-level speed select, Bit 4
37	SF6	Bit-level speed select 6	Bit-level speed select, Bit 5
38	SF7	Bit-level speed select 7	Bit-level speed select, Bit 6

Valid for inputs:	C001, C002, C003, C004, C005, C006, C007, C008
Required settings:	F001, A020 to A035 A019=01

Notes:

- When all [SFx] inputs are OFF, the speed is set by default to the value in F001.
- When a multi-speed setting more than 50Hz(60Hz) is to be set, it is necessary to program the maximum frequency A004 high enough to allow that speed.

Example: (Requires input configuration—see page 3–47. Jumper position shown is for –xFU/-xFR models; for –xFE models, see page 4–12.)

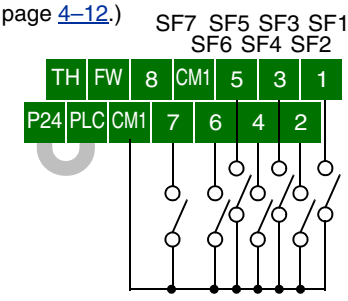

Jogging Command

The Jog input [JG] is used to command the motor to rotate slowly in small increments for manual operation. The speed is limited to 10 Hz. The frequency for the jogging operation is set by parameter A038. Jogging does not use an acceleration ramp. Therefore setting the jogging frequency A038 too high will cause inverter tripping.

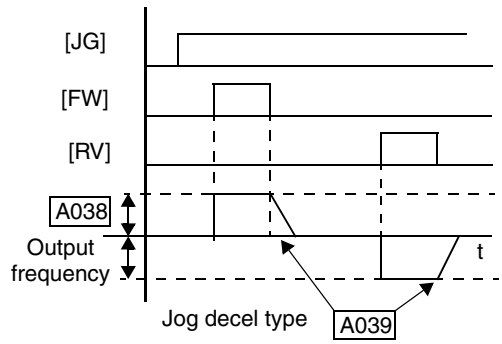

A jog command may arrive while the motor is running. You can program the inverter to either ignore or respond to a jog command in this case by using function A039. The type of deceleration used to end a motor jog is also selectable by programming function A039. Six jog mode options are defined below:

Jogging During Motor Operation		Jog Deceleration Method
Disabled, A039=	Enabled, A039=	
00	03	Free-run stop (coasting)
01	04	Deceleration (normal level) and stop
02	05	Use DC braking and stop

In the left example diagram below, the Jog command is ignored. In the right example diagram, a jog command interrupts a Run mode operation. However, if the Jog command turns ON before the [FW] or [RV] terminal turns ON, the inverter output turns OFF.

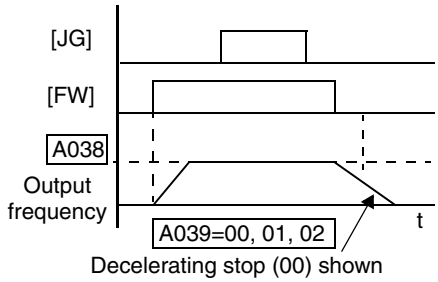

Decelerating stop (00) shown

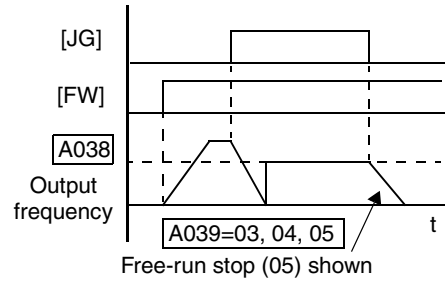

Free-run stop (05) shown

Opt. Code	Symbol	Function Name	Input State	Description
06	JG	Jogging	ON	Enters Jog Mode if enabled (see above)
			OFF	Jog is OFF

Valid for inputs:	C001, C002, C003, C004, C005, C006, C007, C008
Required settings:	A002= 01, A038 > B082, A038 > 0, A039=00 to 05

Notes:

- Jogging is not performed when the value of A038 jogging frequency is smaller than the start frequency B082 or the value is 0 Hz.
- Be sure to turn ON [FW] or [RV] *after* the [JG] input turns ON for a jog operation.
- When setting A039 to 02 or 05, you must also set the DC braking parameters.

Example: (Default input configuration shown—see page 3–47. Jumper position shown is for –xFU/-xFR models; for –xFE models, see page 4–12.)

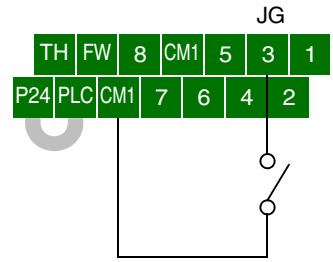

See I/O specs on page 4–9.

External Signal for DC Injection Braking

When the terminal [DB] is turned ON, the DC braking [DB] feature is enabled. Set the following parameters when the external DC braking terminal is to be used:

- A053 – DC braking delay time setting. The range 0.0 to 5.0 seconds.
- A054 – DC braking force setting. The range is 0 to 100%.

The scenarios to the right help show how DC braking works in various situations.

1. Scenario 1 – The [FW] Run or [RV] Run terminal is ON. When the [DB] terminal turns ON, DC braking is applied. When the [DB] terminal turns OFF again, the inverter output ramps to the previous frequency.
2. Scenario 2 – The Run command is applied from the operator keypad. When the [DB] terminal turns ON, DC braking is applied. When the [DB] terminal turns OFF again, the inverter output remains OFF.
3. Scenario 3 – The Run command is applied from the operator keypad. When the [DB] terminal turns ON, DC braking is applied after the delay time set by A053 expires. The motor is in a free-running (coasting) condition during this delay time. When the [DB] terminal turns OFF again, the inverter output remains OFF.

Scenario 1

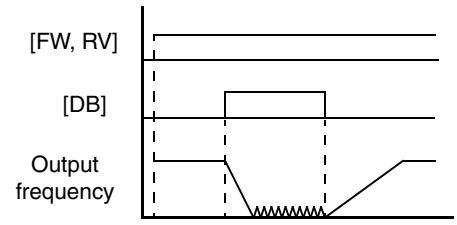

Scenario 2

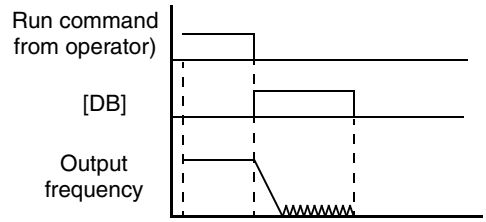

Scenario 3

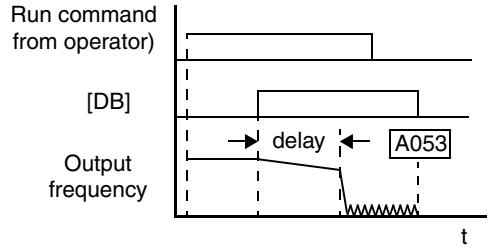

Opt. Code	Symbol	Function Name	Input State	Description
07	DB	External Signal for DC Injection Braking	ON	applies DC injection braking during deceleration
			OFF	does not apply DC injection braking during deceleration

Valid for inputs:	C001, C002, C003, C004, C005, C006, C007, C008
Required settings:	A053, A054

Notes:

- Do not use the [DB] input continuously or for a long time when the DC braking force setting A054 is high (depends on the motor application).
- Do not use the [DB] feature for continuous or high duty cycle as a holding brake. The [DB] input is designed to improve stopping performance. Use a mechanical brake for holding a stop position.

Example: (Requires input configuration—see page 3–47. Jumper position shown is for –xFU/-xFR models; for –xFE models, see page 4–12.)

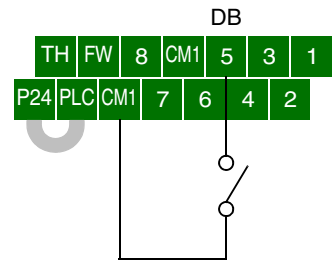

See I/O specs on page 4–9.

Set Second or Third Motors

If you assign the [SET] or [SET3] functions to an intelligent input terminal, you can select between two or three sets of motor parameters. You may assign one or both of these functions. These second and third parameters store alternate sets of motor characteristics. When terminal [SET] or [SET3] is turned ON, the inverter will use the second or third set of parameters accordingly, generating the frequency output to the motor. When changing the state of the [SET] or [SET3] input terminal, the change will not take effect until the inverter is stopped.

When you turn ON the [SET] or [SET3] input, the inverter operates per the second or third set of parameters, respectively. When the terminal is turned OFF, the output function returns to the original settings (first set of motor parameters). Refer to "Configuring the Inverter for Multiple Motors" on page 4–72 for details.

Opt. Code	Symbol	Function Name	Input State	Description
08	SET	Set 2nd Motor	ON	causes the inverter to use the 2nd set of motor parameters for generating the frequency output to motor
			OFF	causes the inverter to default to the 1st (main) set of motor parameters for generating the frequency output to motor
17	SET3	Set 3rd Motor	ON	causes the inverter to use the 3rd set of motor parameters for generating the frequency output to motor
			OFF	causes the inverter to default to the 1st (main) set of motor parameters for generating the frequency output to motor

Valid for inputs:	C001, C002, C003, C004, C005, C006, C007, C008
Required settings:	(none)

Notes:

- If the terminal state is changed while the inverter is running, the inverter continues using the current set of parameters until the inverter is stopped.
- If both SET and SET3 are ON at the same time, SET prevails and the 2nd motor parameters are in effect.

Example: (Requires input configuration—see page 3–47. Jumper position shown is for –xFU/-xFR models; for –xFE models, see page 4–12.)

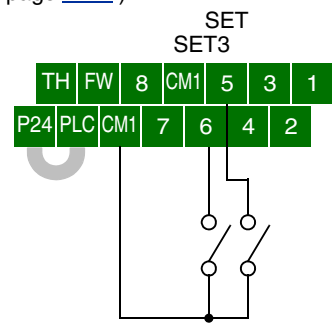

See I/O specs on page 4–9.

Operations and Monitoring

Two-stage Acceleration and Deceleration

When terminal [2CH] is turned ON, the inverter changes the rate of acceleration and deceleration from the initial settings (F002 and F003) to use the second set of acceleration/deceleration values. When the terminal is turned OFF, the inverter is returned to the original acceleration and deceleration time (F002 acceleration time 1, and F003 deceleration time 1). Use A092 (acceleration time 2) and A093 (deceleration time 2) to set the second stage acceleration and deceleration times.

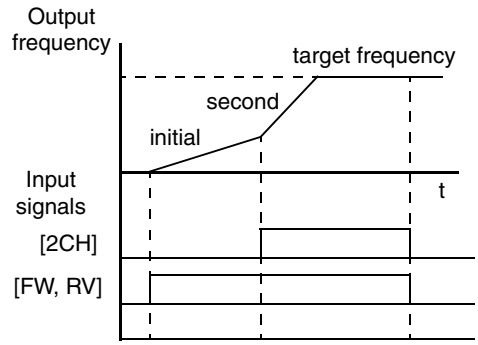

In the graph shown above, the [2CH] signal becomes active during acceleration. This causes the inverter to switch from using acceleration 1 (F002) to acceleration 2 (A092).

Opt. Code	Symbol	Function Name	Input State	Description
09	2CH	Two-stage Acceleration and Deceleration	ON	Frequency output uses 2nd-stage acceleration and deceleration values
			OFF	Frequency output uses the initial acceleration 1 and deceleration 1 values

Valid for inputs:	C001, C002, C003, C004, C005, C006, C007, C008
Required settings:	A092, A093, A094=0

Notes:

- Function A094 selects the method for second stage acceleration. It must be set = 00 to select the input terminal method in order for the [2CH] terminal assignment to operate.

Example: (Default input configuration shown—see page 3–47. Jumper position shown is for –xFU/-xFR models; for –xFE models, see page 4–12.)

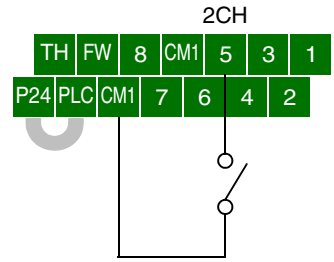

See I/O specs on page 4–9.

Free-run Stop

When the terminal [FRS] is turned ON, the inverter turns OFF the output and the motor enters the free-run state (coasting). If terminal [FRS] is turned OFF, the output resumes sending power to the motor if the Run command is still active. The free-run stop feature works with other parameters to provide flexibility in stopping and starting motor rotation.

In the figure below, parameter B088 selects whether the inverter resumes operation from 0 Hz (left graph) or the current motor rotation speed (right graph) when the [FRS] terminal turns OFF. The application determines the best setting.

Parameter B003 specifies a delay time before resuming operation from a free-run stop. To disable this feature, use a zero delay time.

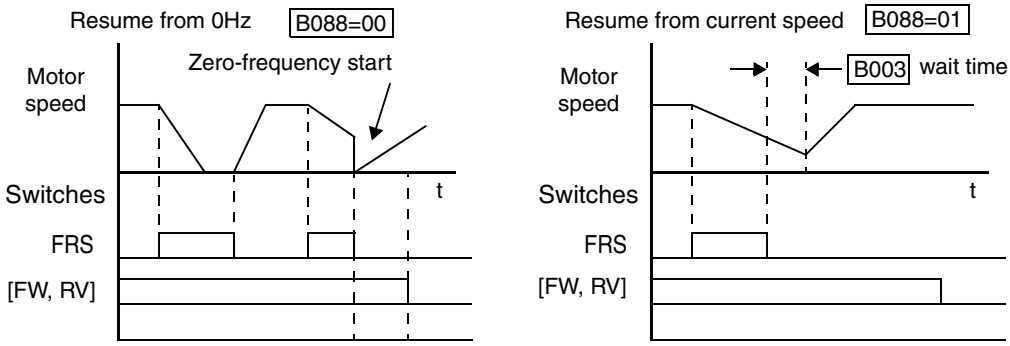

Opt. Code	Symbol	Function Name	Input State	Description
11	FRS	Free-run Stop	ON	Causes output to turn OFF, allowing motor to free run (coast) to stop
			OFF	Output operates normally, so controlled deceleration stops motor

Valid for inputs:	C001, C002, C003, C004, C005, C006, C007, C008
Required settings:	B003, B088, C011 to C018

Notes:

- When you want the [FRS] terminal to be active low (normally closed logic), change the setting (C011 to C018) that corresponds to the input (C001 to C008) that is assigned the [FRS] function.

Example: (Default input configuration shown—see page 3–47. Jumper position shown is for –xFU/-xFR models; for –xFE models, see page 4–12.)

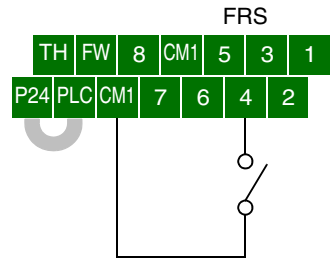

See I/O specs on page 4–9.

External Trip

When the terminal [EXT] is turned ON, the inverter enters the trip state, indicates error code E12, and stops the output. This is a general purpose interrupt type feature, and the meaning of the error depends on what you connect to the [EXT] terminal. Even if [EXT] is turned OFF, the inverter remains in the trip state. You must reset the inverter or cycle power to clear the error, returning the inverter to the Stop Mode.

In the graph below, the [EXT] input turns ON during normal Run Mode operation. The inverter lets the motor free-run to a stop, and the alarm output turns ON immediately. When the operator initiates a Reset command, the alarm and error are cleared. When the Reset is turned OFF, the motor begins rotation since the Run command is already active.

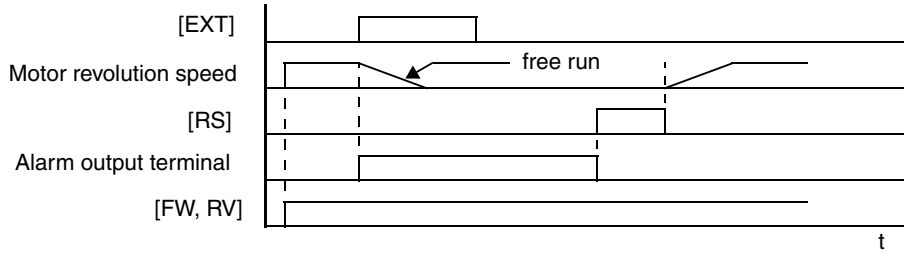

Opt. Code	Symbol	Function Name	Input State	Description
12	EXT	External Trip	ON	When assigned input transitions OFF to ON, inverter latches trip event and displays E12
			OFF	No trip event for ON to OFF, any recorded trip events remain in history until Reset

Valid for inputs:	C001, C002, C003, C004, C005, C006, C007, C008
Required settings:	(none)

Notes:

- If the USP (Unattended Start Protection) feature is in use, the inverter will not automatically restart after cancelling the EXT trip event. In that case, it must receive either another Run command (OFF-to-ON transition), a keypad Reset command, or an [RS] intelligent terminal input signal.

Example: (Requires input configuration—see page 3–47. Jumper position shown is for –xFU/-xFR models; for –xFE models, see page 4–12.)

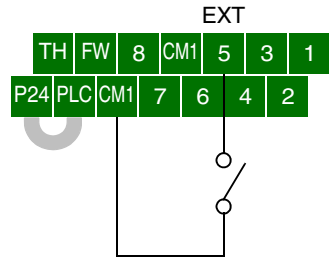

See I/O specs on page 4–9.

Unattended Start Protection

If the Run command is already present when power is turned ON, the inverter starts running immediately after powerup. The Unattended Start Protection (USP) function prevents that automatic startup, so that the inverter *will not* run without outside intervention. When USP is active, there are two ways to reset an alarm and resume running:

1. Turn the Run command OFF, or
2. Perform a reset operation by the terminal [RS] input or the keypad Stop/reset key

The three examples below show how the USP function works in the scenarios described at the bottom of the diagram. The error code E13 indicates the USP trip state and corresponds to the *Alarm* signal in the diagram.

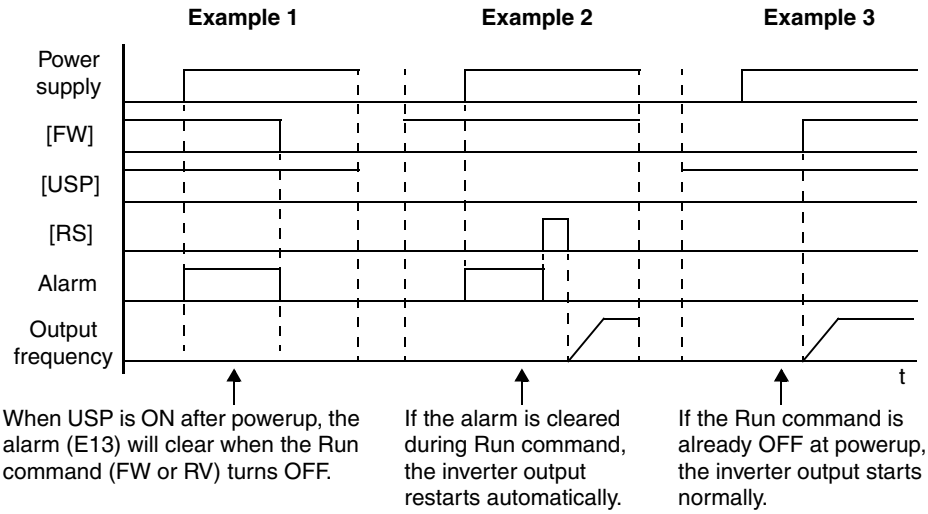

Opt. Code	Symbol	Function Name	Input State	Description
13	USP	Unattended Start Protection	ON	At powerup, the inverter will not resume a Run command
			OFF	At powerup, the inverter will resume a Run command that was active before power loss

Valid for inputs:	C001, C002, C003, C004, C005, C006, C007, C008
Required settings:	(none)

Notes:

- Note that when a USP error occurs and it is canceled by a reset from the [RS] terminal input or keypad, the inverter restarts immediately.
- Even when the trip state is canceled by turning the terminal [RS] ON and OFF after an undervoltage trip E09 occurs, the USP function will be performed.
- When the Run command is active immediately after the power is turned ON, a USP error will occur. When this function is used, wait for at least three (3) seconds after powerup before applying a Run command.

Example: (Dfault input configuration shown for -FU models; -FE and -F models require input configuration—see page 3–47. Jumper position shown is for –xFU/-xFR models; for –xFE models, see page 4–12.)

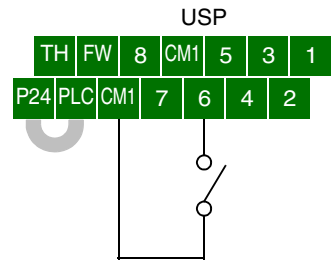

See I/O specs on page 4–9.

Commercial Power Source Switching

The commercial power source switching function is useful in systems with excessive starting torque requirements. This feature permits the motor to be started "across the line," sometimes called a *bypass* configuration. After the motor is running, the inverter takes over to control the speed. This feature can eliminate the need to oversize the inverter, reducing cost. However, additional hardware such as magnetic contactors will be required to realize this function. For example, a system may require 55KW to start, but only 15KW to run at constant speed. Therefore, a 15KW rated inverter would be sufficient when using the commercial power source switching.

The following block diagram shows an inverter system with *bypass* capability. When starting the motor directly across the line, relay contacts Mg2 are closed, and Mg1 and Mg3 are open. This is the bypass configuration, since the inverter is isolated from the power source and motor. Then Mg1 contacts close about 0.5 to 1 second after that, supplying power to the inverter.

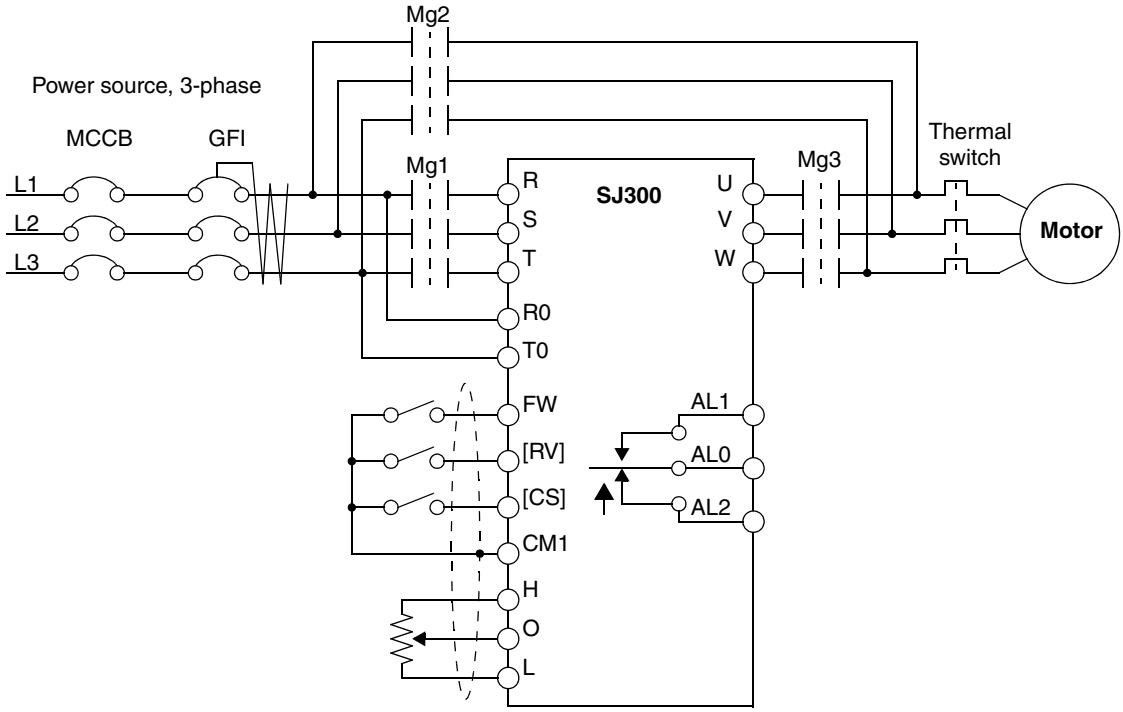

Switching to inverter control occurs after the motor is running at full speed. First, Mg2 relay contacts open. Then about 0.5 to 1 seconds later, relay Mg3 contacts close, connecting the inverter to the motor. The following timing diagram shows the event sequence:

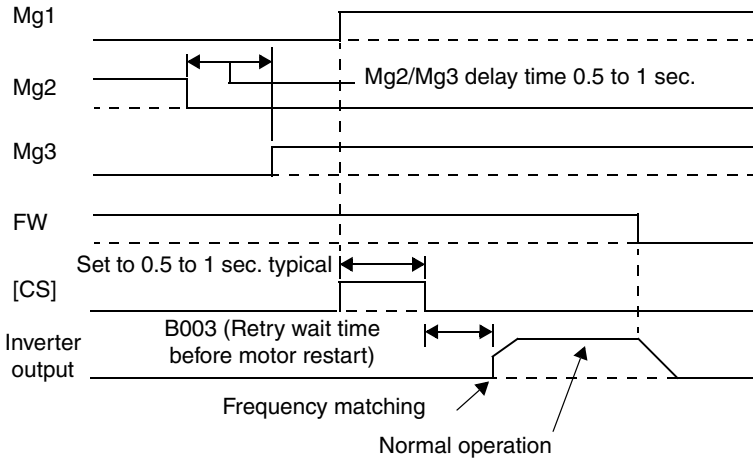

In the previous timing diagram, when the motor has been started across the line, Mg2 is switched OFF and Mg3 is switched ON. With the Forward command to the inverter already ON, the [CS] terminal is switched ON and relay Mg1 contacts close. The inverter will then read the motor RPM (frequency matching). When the [CS] terminal is switched OFF, the inverter applies the *Retry wait time before motor restar*t parameter (B003).

Once the delay time has elapsed the inverter will then start and match the frequency (if greater than the threshold set by B007). If the ground fault interrupter breaker (GFI) trips on a ground fault, the bypass circuit will not operate the motor. When an inverter backup is required, take the supply from the bypass circuit GFI. Use control relays for [FW], [RV], and [CS].

The commercial power source switching function requires you to assign [CS] to an intelligent input terminal, using option code 14.

Opt. Code	Symbol	Function Name	Input State	Description
14	CS	Commercial Power Change	ON	OFF-to-ON transition signals the inverter that the motor is already running at powerup (via bypass), thus suppressing the inverter's motor output in Run Mode
			OFF	ON-to-OFF transition signals the inverter to apply a time delay (B003), frequency match its output to existing motor speed, and resume normal Run Mode operation
Valid for inputs:		C001, C002, C003, C004, C005, C006, C007, C008		Example: (Requires input configuration—see page 3–47. Jumper position shown is for –xFU/-xFR models; for –xFE models, see page 4–12.) 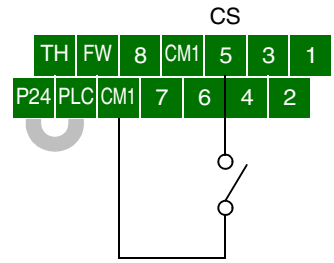 See I/O specs on page 4–9.
Required settings:		B003, B007		
Notes: • If an over-current trip occurs during frequency matching, extend the retry wait time B003.				

Software Lock

When the terminal [SFT] is turned ON, the data of all the parameters and functions (except the output frequency, depending on the setting of B031) is locked (prohibited from editing). When the data is locked, the keypad keys cannot edit inverter parameters. To edit parameters again, turn OFF the [SFT] terminal input.

Use parameter B031 to select whether the output frequency is excluded from the lock state or is locked as well.

Opt. Code	Symbol	Function Name	Input State	Description
15	SFT	Software Lock	ON	The keypad and remote programming devices are prevented from changing parameters
			OFF	The parameters may be edited and stored

Valid for inputs:	C001, C002, C003, C004, C005, C006, C007, C008
Required settings:	B031 (excluded from lock)

Notes:

- When the [SFT] terminal is turned ON, only the output frequency can be changed.
- Software lock can include the output frequency by setting B031.
- Software lock by the operator is also possible without the [SFT] terminal being used (B031).

Example: (Requires input configuration—see page 3–47. Jumper position shown is for –xFU/-xFR models; for –xFE models, see page 4–12.)

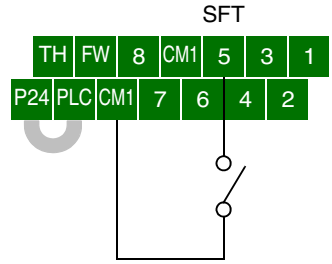

See I/O specs on page 4–9.

Analog Input Current/Voltage Select

The [AT] terminal operates in conjunction with parameter setting A005 to determine the analog input terminals that are enabled for current or voltage input. Setting A006 determines whether the signal will be bipolar, allowing for a reverse direction range. Note that current input signal cannot be bipolar and cannot reverse direction (must use [FW] and [RV] command with current input operation). The following table shows the basic operation of the [AT] intelligent input. Please refer to "Analog Input Operation" on page 4–59 for more information on bipolar input configuration, and the operating characteristics of analog inputs.

Opt. Code	Symbol	Function Name	Input State	Description
16	AT	Analog Input Voltage/current Select	ON	• With A005 = 00, [AT] will enable terminals [OI]–[L] for current input, 4 to 20mA • With A005=01, [AT] will enable terminals [O2]–[L] for voltage input
			OFF	Terminals [O]–[L] are enabled for voltage input (A005 may be equal to 00 or 01) in this case

Valid for inputs:	C001, C002, C003, C004, C005, C006, C007, C008
Required settings:	A001 = 01 A005 = 00 / 01 A006 = 00 / 01 / 02

Notes:

- Be sure to set the frequency source setting A001=01 to select the analog input terminals.

Example: (Default input configuration shown—see page 3–47. Jumper position shown is for –xFU/-xFR models; for –xFE models, see page 4–12.)

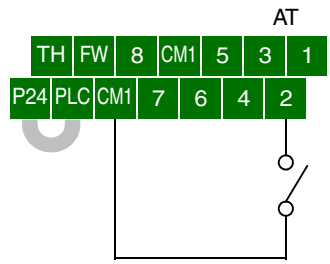

See I/O specs on page 4–9.

Operations and Monitoring

Reset Inverter

The [RS] terminal causes the inverter to execute the reset operation. If the inverter is in Trip Mode, the reset cancels the Trip state. When the signal [RS] is turned ON and OFF, the inverter executes the reset operation. The minimum pulse width for [RS] must be 12 ms or greater. The alarm output will be cleared within 30 ms after the onset of the Reset command.

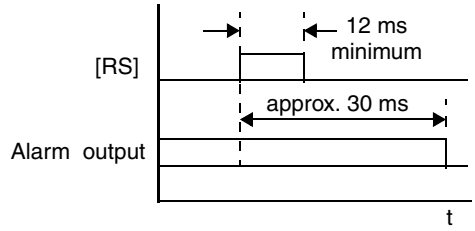

WARNING: After the Reset command is given and the alarm reset occurs, the motor will restart suddenly if the Run command is already active. Be sure to set the alarm reset after verifying that the Run command is OFF to prevent injury to personnel.

Opt. Code	Symbol	Function Name	Input State	Description
18	RS	Reset Inverter	ON	The motor output is turned OFF, the Trip Mode is cleared (if it exists), and powerup reset is applied
			OFF	Normal power-on operation

Valid for inputs:	C001, C002, C003, C004, C005, C006, C007, C008
Required settings:	B003, B007, C102, C103

Example: (Default input configuration shown—see page 3–47. Jumper position shown is for –xFU/-xFR models; for –xFE models, see page 4–12.)

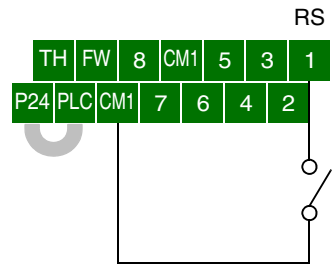

See I/O specs on page 4–9.

Notes:

- When the control terminal [RS] input is already ON at powerup for more than 4 seconds, the remote operator display is "R-ERROR COMM<2>" (the display of the digital operator is – – – –). However, the inverter has no error. To clear the digital operator error, turn OFF the terminal [RS] input and press one of the operator keys.
- The active edge (leading or trailing) of the [RS] signal is determined by the setting of C102.
- A terminal configured with the [RS] function can only be configured as a normally open contact. The terminal cannot be used in the normally closed contact state.
- When input power is turned ON, the inverter performs the same reset operation as it does when a pulse on the [RS] terminal occurs.

Thermistor Thermal Protection

Motors that are equipped with a thermistor can be protected from overheating. Input terminal [TH] is dedicated to sense a thermistor resistance. The input can be set up (via B098 and B099) to accept a wide variety of NTC or PTC type thermistors. Use this function to protect the motor from overheating.

Opt. Code	Symbol	Function Name	Input State	Description
—	TH	Thermistor Thermal Protection	Sensor	When a thermistor is connected between to terminals [TH] and [CM1], the inverter checks for over-temperature and will cause a trip (E35) and turn OFF the output to the motor
			Open	An open circuit in the thermistor causes a trip, and the inverter turns OFF the output

Valid for inputs:	[TH] only
Required settings:	B098, B099, and C085

Notes:

- Be sure the thermistor is connected to terminals [TH] and [CM1]. If the resistance is above or below (depending on whether NTC or PTC) the threshold the inverter will trip. When the motor cools down enough, the thermistor resistance will change enough to permit you to clear the error. Press the STOP/ Reset key to clear the error.

Example:

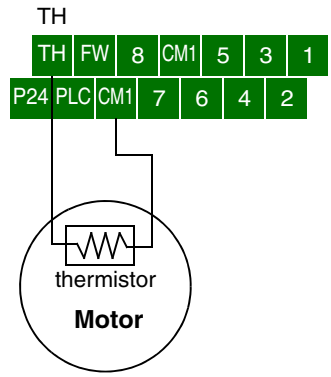

See I/O specs on page 4–9.

Three-wire Interface Operation

The 3-wire interface is an industry standard motor control interface. This function uses two inputs for momentary contact start/stop control, and a third for selecting forward or reverse direction. To implement the 3-wire interface, assign 20 [STA] (Start), 21 [STP] (Stop), and 22 [F/R] (Forward/Reverse) to three of the intelligent input terminals. Use momentary contact for Start and Stop. Use a selector switch, such as SPST for the Forward/Reverse input. Be sure to set the operation command selection A002=01 for input terminal control of motor.

If you have a motor control interface that needs logic-level control (rather than momentary pulse control), use the [FW] and [RV] inputs instead.

Opt. Code	Symbol	Function Name	Input State	Description
20	STA	Start Motor	ON	Start motor rotation on momentary contact (uses acceleration profile)
			OFF	No change to motor operation
21	STP	Stop Motor	ON	No change to motor operation
			OFF	Stop motor rotation on momentary contact (uses deceleration profile)
22	F/R	Forward/Reverse	ON	Select *reverse* direction of rotation
			OFF	Select *forward* direction of rotation

Valid for inputs:	C001, C002, C003, C004, C005, C006, C007, C008
Required settings:	A002=01

Notes:

- The STP logic is inverted. Normally the switch will be closed, so you open the switch to stop. In this way, a broken wire causes the motor to stop automatically (safe design).
- When you configure the inverter for 3-wire interface control, the dedicated [FW] terminal is automatically disabled. The [RV] intelligent terminal assignment is also disabled.

Example: (Requires input configuration—see page 3–47. Jumper position shown is for –xFU/-xFR models; for –xFE models, see page 4–12.)

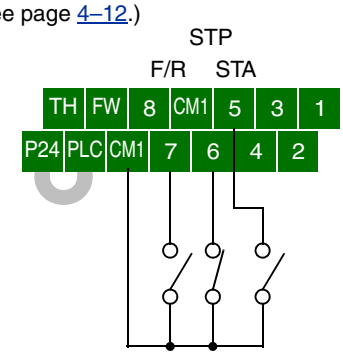

See I/O specs on page 4–9.

The diagram below shows the use of 3-wire control. STA (Start Motor) is an edge-sensitive input; an OFF-to-ON transition gives the Start command. The control of direction is level-sensitive, and the direction may be changed at any time. STP (Stop Motor) is also a level-sensitive input.

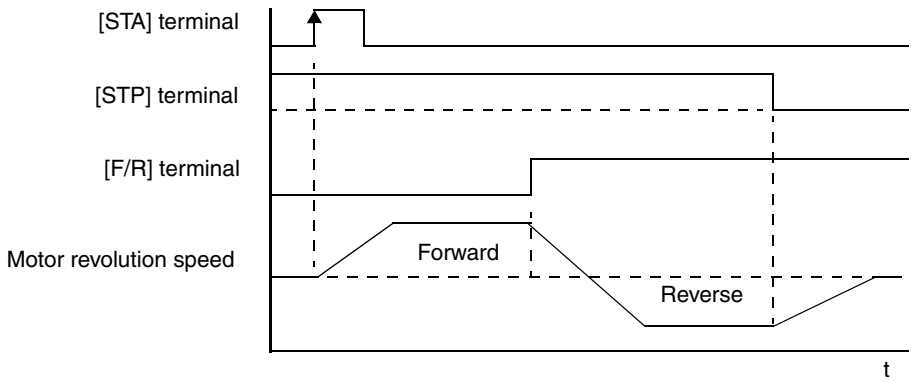

PID ON/OFF and PID Clear

The PID loop function is useful for controlling motor speed to achieve constant flow, pressure, temperature, etc. in many process applications. The PID Disable function temporarily suspends PID loop execution via an intelligent input terminal. It overrides the parameter A071 (PID Enable) to stop PID execution and return to normal motor frequency output characteristics. the use of PID Disable on an intelligent input terminal is optional. Of course, any use of the PID loop control requires setting PID Enable function A071=01.

The PID Clear function forces the PID loop integrator sum = 0. So, when you turn ON an intelligent input configured as [PIDC], the integrator sum is reset to zero. This is useful when switching from manual control to PID loop control and the motor is stopped.

CAUTION: Be careful not to turn PID Clear ON and reset the integrator sum when the inverter is in Run Mode (output to motor is ON). Otherwise, this could cause the motor to decelerate rapidly, resulting in a trip.

Opt. Code	Symbol	Function Name	Input State	Description
23	PID	PID Disable	ON	Disables PID loop execution
			OFF	Allows PID loop execution if A71=01
24	PIDC	PID Clear	ON	Force the value of the integrator to zero
			OFF	No change to PID loop execution

Valid for inputs:	C001, C002, C003, C004, C005, C006, C007, C008
Required settings:	A071

Notes:

- The use of [PID] and [PIDC] terminals are optional. Use A071=01 if you want PID loop control enabled all the time.
- Do not enable/disable PID control while the motor is running (inverter is in Run Mode).
- Do not turn ON the [PIDC] input while the motor is running (inverter is in Run Mode).

Example: (Requires input configuration—see page 3–47. Jumper position shown is for –xFU/-xFR models; for –xFE models, see page 4–12.)

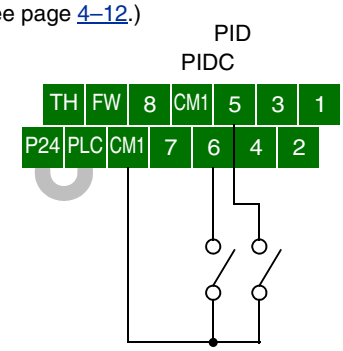

See I/O specs on page 4–9.

Internal Speed Loop Gain Settings

When sensorless vector control, 0Hz sensorless vector control, or vector control with sensor is selected for the control method, the Control Gain Switching function selects between two sets of gains in the internal speed loop. These gains are used in proportional and integral compensation. Use option code 26 to assign the [CAS] function to an intelligent input terminal. Use option code 43 to select between P and PI control.

Opt. Code	Symbol	Function Name	Input State	Description
26	CAS	Control Gain Switching	ON	Gains in parameters H070, H071, and H072 are selected
			OFF	Gains in parameters H050, H051, H052; or, H250, H251, H252 (2nd motor) are selected
43	PPI	P / PI Control Switching	ON	Selects Proportional control (P)
			OFF	Selects Proportional-Integral control (PI)

Valid for inputs:	C001, C002, C003, C004, C005, C006, C007, C008
Required settings:	A044 / A244 / A344 = 03 (SLV), or 04 (0 Hz domain), or 05 (V2)

Notes:
- When Control Gain Switching is not selected for an intelligent input terminal, the default gains in effect correspond to the OFF state of [CAS].

Example: (Requires input configuration—see page 3–47. Jumper position shown is for –xFU/-xFR models; for –xFE models, see page 4–12.)

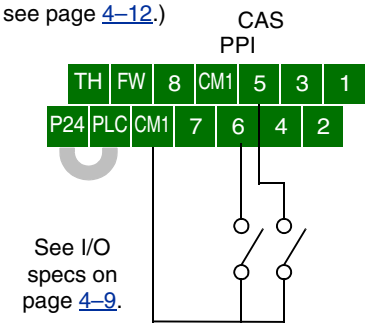

The table below lists the functions and parameter settings related to internal speed loop gains.

Function Code	Parameter	Setting Range	Description
A044 / A244 / A344	Control method selection	03	SLV (does not use A344)
		04	0-Hz Domain SLV (does not use A344)
		05	V2 (does not use A244 or A344)
C001 - C008	Intelligent input selection	43	PPI : P/I switching
H005 / H205	Speed response	0.001 to 65.53	No dimension
H050 / H250	PI proportional gain	0.0 to 999.9/1000	% gain
H051 / H251	PI integral gain	0.0 to 999.9/1000	% gain
H052 / H252	P proportional gain	0.01 to 10.00	No dimension
H070	PI proportional gain for switching	0.0 to 999.9/1000	% gain
H071	PI integral gain for switching	0.0 to 999.9/1000	% gain
H072	P proportional gain for switching	0.0 to 10.0	No dimension

The speed control mode is normally proportional-integral compensation (PI), which attempts to keep the deviation between the actual speed and speed command equal to zero. You can also select proportional (P) control function, which can be used for *droop* control (i.e. several inverters driving one load). *Droop* is the speed difference resulting from P control versus PI control at 100% output torque as shown in the graph. Set the P/PI switching function (option 43) to one of the intelligent input terminals [1] to [8]. When the P/PI input terminal is ON, the control mode becomes proportional control (P). When the P/PI input terminal is OFF, the control mode becomes proportional-integral control.

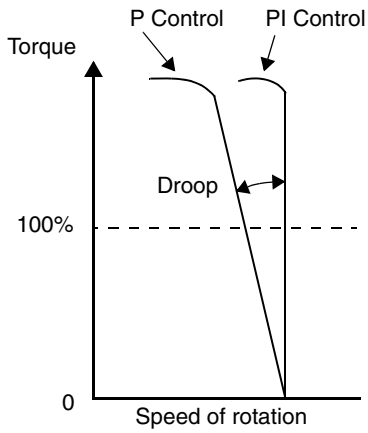

The proportional gain Kpp value determines the droop. Set the desired value using parameter H052. The relationship between the Kpp value and the droop is shown below:

$$\text{Droop} = \frac{10}{(\text{Kpp Set Value})}(\%)$$

The relationship between the droop and the rated rotation speed is shown below:

$$\text{Droop} = \frac{\text{Speed error at rated torque}}{\text{Synchronous speed base frequency}}$$

Remote Control Up and Down Functions

The [UP] [DWN] terminal functions can adjust the output frequency for remote control while the motor is running. The acceleration time and deceleration time used with this function is the same as for normal operation ACC1 and DEC1 (2ACC1,2DEC1). The input terminals operate as follows:

- Acceleration - When the [UP] contact is turned ON, the output frequency accelerates from the current value. When it is turned OFF, the output frequency maintains its current value.
- Deceleration - When the [DWN] contact is turned ON, the output frequency decelerates from the current value. When it is turned OFF, the output frequency maintains its current value.

In the graph below, the [UP] and [DWN] terminals activate while the Run command remains ON. The output frequency responds to the [UP] and [DWN] commands.

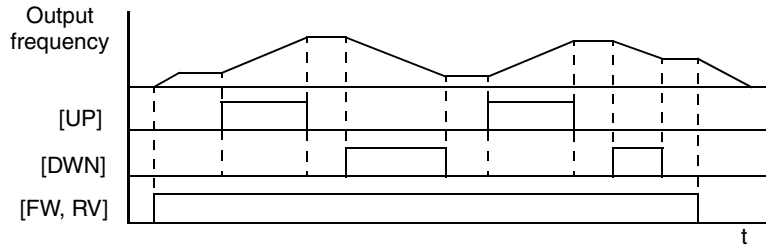

It is possible for the inverter to retain the frequency set from the [UP] and [DWN] terminals through a power loss. Parameter C101 enables/disables the memory. If disabled, the inverter retains the last frequency before an UP/DWN adjustment. Use the [UDC] terminal to clear the memory and return to the original set output frequency.

Opt. Code	Symbol	Function Name	Input State	Description
27	UP	Remote Control UP Function	ON	Accelerates (increases output frequency) motor from current frequency
			OFF	Output to motor operates normally
28	DWN	Remote Control DOWN Function	ON	Decelerates (decreases output frequency) motor from current frequency
			OFF	Output to motor operates normally
29	UDC	Remote Control Data Clear	ON	Clears the Up/down frequency memory
			OFF	No effect on Up/down memory

Valid for inputs:	C001, C002, C003, C004, C005, C006, C007, C008
Required settings:	A001 = 02 C101 = 01 (enables memory)

Notes:

- This feature is available only when the frequency command source is programmed for operator control. Confirm A001 is set to 02.
- This function is not available when [JG] is in use.
- The range of output frequency is 0 Hz to the value in A004 (maximum frequency setting).
- The Remote Control Up/Down function varies the inverter speed by directly writing to the F001 output frequency setting.

Example: (Requires input configuration—see page 3–47. Jumper position shown is for –xFU/-xFR models; for –xFE models, see page 4–12.)

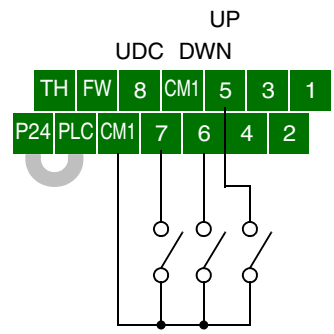

See I/O specs on page 4–9.

Force Operation from Digital Operator

This function permits a digital operator interface to override the Run command source setting (A002) when it is configured for a source other than the operator interface. When the [OPE] terminal is ON and the operator interface gives a Run command, the inverter uses the standard output frequency settings to operate the motor.

Opt. Code	Symbol	Function Name	Input State	Description
31	OPE	Force Operation from Digital Operator	ON	Forces the operator interface Run command to over-ride commands from input terminals (such as [FW], [RV]).
			OFF	Run command operates normally, as configured by A002

Valid for inputs:	C001, C002, C003, C004, C005, C006, C007, C008
Required settings:	A001 A002 (set not equal to 02)

Notes:

- When changing the [OPE] state during Run Mode (inverter is driving the motor), the inverter will stop the motor before the new [OPE] state takes effect.
- If the [OPE] input turns ON and the digital operator gives a Run command while the inverter is already running, the inverter stops the motor. Then the digital operator can control the motor.

Example: (Requires input configuration—see page 3–47. Jumper position shown is for –xFU/-xFR models; for –xFE models, see page 4–12.)

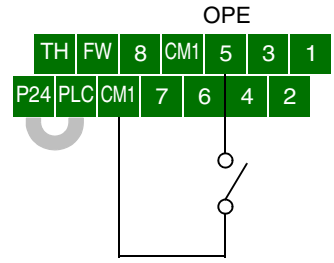

See I/O specs on page 4–9.

Overload Restriction

The inverter constantly monitors the motor current during acceleration, deceleration, and constant speed. If the inverter reaches the overload restriction level, it adjusts the output frequency automatically to limit the amount of overload. This function prevents an over-current trip by inertia during rapid acceleration or large changes in load at constant speed. It also attempts to prevent an over-voltage trip on deceleration due to regeneration. It accomplishes this by temporarily suspending deceleration and/or increasing the frequency in order to dissipate regenerative energy. Once the DC bus voltage falls sufficiently, deceleration will resume.

OLR Parameter Selection – Two sets of overload restriction parameter settings and values are available as outlined in the table below. Use the B021—B026 group of settings to configure the two set of parameters as needed. By assigning the Overload Restriction function [OLR] to an intelligent terminal, you can select the set of restriction parameters that is in effect.

Function	Function Code		Data or Range	Description
	Set 1	Set 2		
Overload Restriction Operation Mode	B021	B024	00	Disable
			01	Enabled during accel and constant speed
			02	Enabled during constant speed
			03	Enabled during accel, constant speed, and decel
Overload Restriction Setting	B022	B025	Rated current * 0.5 to rated current * 2	Current value at which the restriction begins
Deceleration Rate at Overload Restriction	B023	B026	0.1 to 30 seconds	Deceleration time when overload restriction operates

Opt. Code	Symbol	Function Name	Input State	Description
39	OLR	Overload Restriction Selection	ON	Selects Overload Restriction Set 2, B024, B025, B026 settings in effect
			OFF	Selects Overload Restriction Set 1, B021, B022, B023 settings in effect

Valid for inputs:	C001, C002, C003, C004, C005, C006, C007, C008
Required settings:	B021, B022, B023 (Mode 1), B024, B025, B026 (Mode 2)

Notes:

- If the overload restriction constant (B023 or B026) is set too short, an over-voltage trip during deceleration will occur due to regenerative energy from the motor.
- When an overload restriction occurs during acceleration, the motor will take longer to reach the target frequency, or may not reach it. The inverter will make the following adjustments:
  a) Increase the acceleration time
  b) Raise torque boost
  c) Raise overload restriction level

Example: (Requires input configuration—see page 3–47. Jumper position shown is for –xFU/-xFR models; for –xFE models, see page 4–12.)

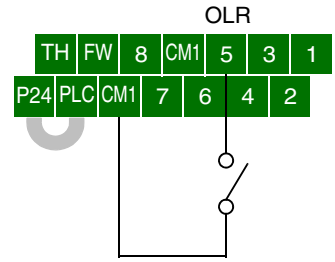

See I/O specs on page 4–9.

The figure below shows the operation during an overload restriction event. The overload restriction level is set by B022 and B025. The overload restriction constant is the time to decelerate to 0Hz from maximum frequency. When this function operates, the acceleration time will be longer than the normal acceleration time.

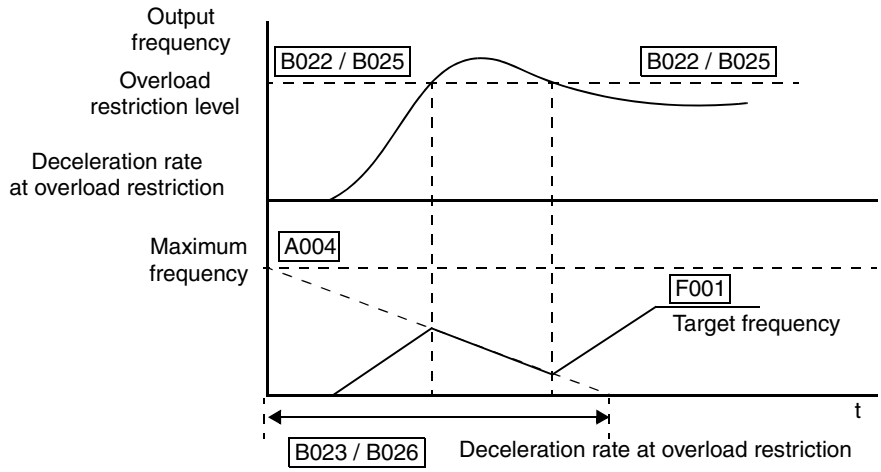

NOTE: The Overload Advance Notice function for intelligent outputs is related to Overload Restriction operation, discussed in "Overload Advance Notice Signal" on page 4–46.

Torque Limit

The Torque Limit function limits the motor output torque for sensorless vector control, sensorless vector control 0Hz domain, or vector control with feedback.

In the torque limit function, the following operational modes are available (selected by B040):

1. Four-quadrant individual setting mode – This mode sets torque limit in 4 zones, forward driving and regenerating, reverse driving and regenerating. Limits for each quadrant are set with B041 – B044 individually.
2. Terminal selection mode – By use of torque limit select intelligent input terminals 1 and 2, this mode changes and uses torque limits 1 – 4 set in B041 – B044. Selected torque limit range is valid in all four quadrants.
3. Analog input mode – This mode sets torque limit value by the voltage applied to terminal [O2] (referenced to [L] for ground. An input of 0 – 10V corresponds to the torque limit value of 0 to 200%. The selected torque limit value is valid in all four quadrants (whether forward or reverse move, driving or regenerating).
4. Expansion Cards 1 and 2 – This function is valid when using the expansion card (SJ-DG). Please refer to the SJ-DG instruction manual.

When the torque limit enable function [TL] is assigned to an intelligent input terminal, torque limiting occurs only when [TL] is ON. When the [TL] input is OFF, the inverter always uses the default torque control limit of 200% maximum. That torque limit value corresponds to 200% of the maximum inverter output current. Therefore, the output torque also depends on the particular motor in use. When the over-torque output [OTQ] is assigned in the intelligent output selection, it turns ON when the inverter is performing torque limiting.

Code	Function	Data or Range	Description
A044 / A244	Control method selection	00 01 02 03 04 05	V/f Constant torque V/f Variable torque V/f Free-setting torque *1 Sensorless vector *1 Sensorless vector, 0 Hz domain *1 Vector control with sensor *2
B040	Torque limit selection	00 01 02 03 04	4-quadrant individual setting Terminal selection Analog [O2] input Expansion card 1 Expansion card 2
B041	Torque limit 1	0 to 200%	Forward-driving in 4-quadrant mode
B042	Torque limit 2	0 to 200%	Reverse-regenerating in 4-quadrant mode
B043	Torque limit 3	0 to 200%	Reverse-driving in 4-quadrant mode
B044	Torque limit 4	0 to 200%	Forward-regenerating in 4-quadrant mode
C001 to C008	Intelligent input terminal [1] to [8] function	40 41 42	Torque limit enable Torque limit selection, bit 1 (LSB) Torque limit selection, bit 2 (MSB)
C021 to C025	Intelligent output terminal [11] to [15] function	10	In torque limit

Note 1: Unavailable for A344
Note 2: Unavailable for A244 and A344

The 4-quadrant operation mode for torque limiting (B040=00) is illustrated in the figure to the right. The instantaneous torque depends on inverter activity (acceleration, constant speed, or deceleration), as well as the load. These factors determine the operating quadrant at any particular time. The parameters in B041, B042, B043 and B044 determine the amount of torque limiting that the inverter applies.

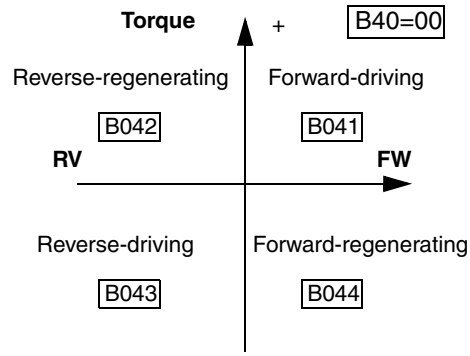

The terminal selection mode (B040=01) uses two intelligent inputs [TRQ1] and [TRQ2] for the binary-encoded selection of one of the four torque limit parameters B041, B042, B043 and B044.

Opt. Code	Symbol	Function Name	Input State	Description
40	TL	Torque limit enable	ON	Enables torque limiting
			OFF	Disables torque limiting
41	TRQ1	Torque limit select 1	0 / 1	Torque limit select, Bit 1 (LSB)
42	TRQ2	Torque limit select 2	0 / 1	Torque limit select, Bit 2 (MSB)

Valid for inputs:	C001, C002, C003, C004, C005, C006, C007, C008
Required settings:	B040, B041, B042, B043, B044

Notes:

- Both the 4-quadrant mode and terminal switching mode of torque limiting use input [TL] for enable/disable.
- Inputs TRQ1 and TRQ2 apply only to terminal switching mode.

Intelligent Inputs		Torque limit parameter
TRQ2	TRQ1	
OFF	OFF	B041
OFF	ON	B042
ON	OFF	B043
ON	ON	B044

- When using the torque limit function at low speed, also use the overload restriction feature.

Examples: (Require input configuration—see page 3–47. Jumper position shown is for –xFU/-xFR models; for –xFE models, see page 4–12.)

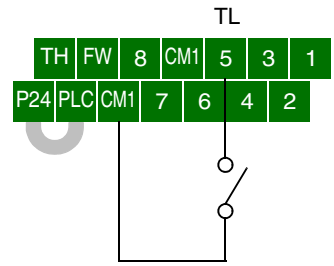

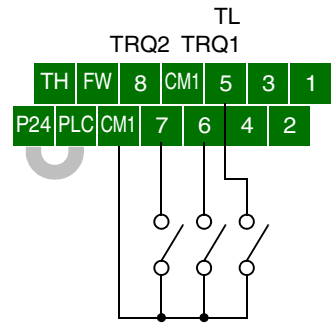

See I/O specs on page 4–9.

External Brake Control Function

The External Brake Control function enables the inverter to control external electromechanical brake systems with a particular safety characteristic. For example, elevator control systems maintain the brake on the load until the drive motor has reached a *releasing* frequency (point at which the external mechanical brake is released). This ensures that the load does not have an opportunity to begin coasting before the inverter begins driving the motor. The External Brake Control function can be enabled by setting parameter B120=01. The diagram below shows the signals that are important to this function.

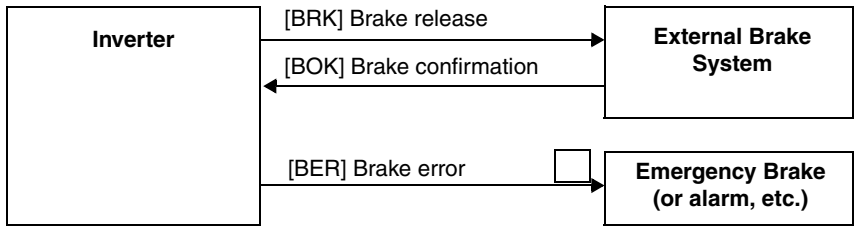

The steps below describe the timing diagram of events on the following page.

1. When the Run command turns ON, the inverter begins to operate and accelerate to releasing frequency (B125).
2. After the output frequency arrives at the set releasing frequency (B125), the inverter waits for the brake release confirmation, set by B121. The inverter outputs the braking release signal [BRK]. However, if the output current of the inverter is less than the releasing current set by B126, the inverter does not turn ON the brake release output [BRK]. The lack of the proper current level indicates a fault (such as open wire to motor). In this case, the inverter trips and outputs the braking error signal [BER]. This signal is useful to engage an emergency brake to ensure the load does not move, if the primary braking system has failed.
3. While the brake release output [BRK] is ON, the inverter drives the motor but does not accelerate immediately. The inverter waits for confirmation from the external brake. When the external brake system properly releases, it signals the inverter by using the Brake OK input terminal [BOK]. If [BOK] is not assigned to an intelligent input, B124 is ignored.
4. When the brake operates properly and signals with the [BOK] input, the inverter waits for the required time for acceleration (B122), and then begins to accelerate to the set target frequency. If [BOK] is not assigned to an intelligent input, acceleration begins after the delay time set by B122 after [BRK] signal occurs.
5. When the Run command turns OFF, the procedure outlined above happens in reverse. The idea is to engage the brake before the motor comes completely to a stop. The inverter decelerates to the releasing frequency (B125) and turns the brake release output [BRK] OFF to engage the brake.
6. The inverter does not decelerate further during just the waiting time for brake confirmation (B121). If the brake confirmation signal does not turn OFF within the waiting time for brake confirmation, the inverter causes a trip alarm and outputs the brake error signal [BER] (useful for engaging an emergency brake system).
7. Normally, the brake confirmation signal [BOK] turns OFF, and the inverter waits the required waiting time. Then the inverter begins to decelerate again and brings motor and load to a complete stop (see timing diagram on next page).

Code	Function	Data or Range	Description
B120	Brake control enable	00=Disable 01=Enable	Enables external brake control function within the inverter
B121	Brake waiting time for release	0.00 to 5.00 sec.	Sets the time delay after arrival at release frequency (B125) before the inverter outputs brake release signal [BRK]
B122	Brake wait time for acceleration	0.00 to 5.00 sec.	Sets time delay after brake confirmation signal [BOK] is received until the inverter begins to accelerate to the set frequency

Code	Function	Data or Range	Description
B123	Brake wait time for stopping	0.00 to 5.00 sec.	Sets the time delay after brake confirmation signal [BOK] turns OFF (after [BRK] turns OFF) until decelerating the inverter to 0 Hz
B124	Brake wait time for confirmation	0.00 to 5.00 sec.	Sets the wait time for [BOK] signal after turn ON/ OFF of [BRK] signal. If [BOK] is not received during the specified time, the inverter will trip with an external brake error [BER].
B125	Break release frequency setting	0.00 to 99.99 Hz / 100.0 to 400.0 Hz	Sets the frequency at which the inverter outputs the brake release signal [BRK] after delay set by B121
B126	Brake release current setting	0% to 200% of rated current	Sets the minimum inverter current level above which the brake release signal [BRK] will be permitted

The diagram below shows the event sequence described in the steps on the previous page.

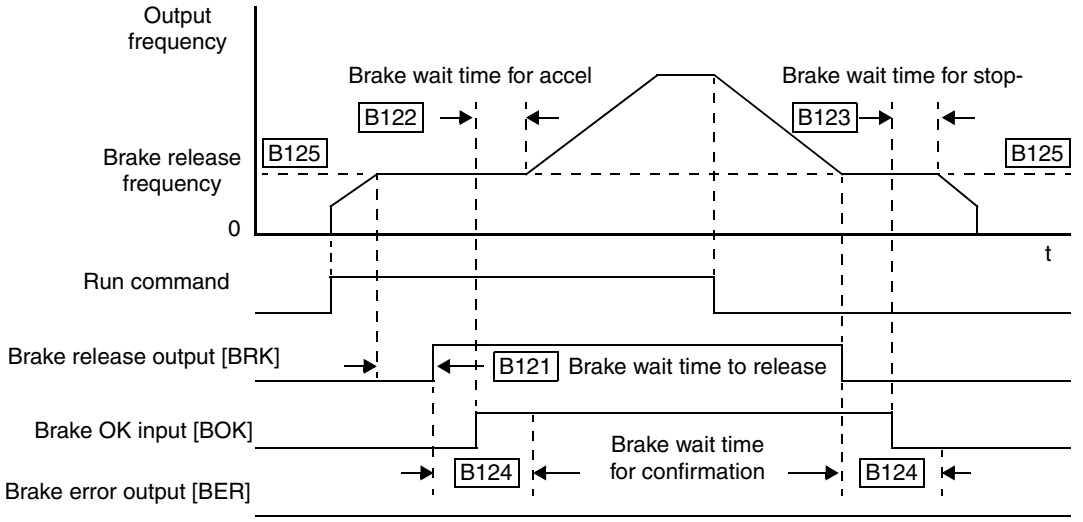

The following table pertains to the brake confirmation input.

Opt. Code	Symbol	Function Name	Input State	Description
44	BOK	Brake confirmation	ON	Indicates external brake is not engaged
			OFF	Indicates external brake is engaged

Valid for inputs:	C001, C002, C003, C004, C005, C006, C007, C008
Required settings:	B120=01 B121 to B126 set

Notes:

- The signal [BOK] turns ON to indicate that an external brake system has released. If external brake control is enabled (B120=01), then the [BOK] signal must work properly to avoid an inverter trip event.
- If [BOK] is not assigned to an intelligent input, then setting B124 is ignored.

Example: (Requires input configuration—see page 3–47. Jumper position shown is for –xFU/-xFR models; for –xFE models, see page 4–12.)

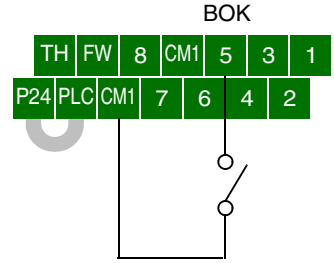

See I/O specs on page 4–9.

Expansion Card Input Signals

Other inputs listed below require the expansion card SJ-FB Encoder Feedback. Please see the SJ-FB manual for more information.

Opt. Code	Symbol	Function Name	Description
45	ORT	Orientation	Orientation (home search sequence)
46	LAC	LAD Cancel	Cancels the linear acceleration/deceleration position control in the feedback card
47	PCLR	Position deviation clear	Forces the position error to zero
48	STAT	Pulse train input enable	Starts the pulse train control of motor frequency

The diagram below shows how the Input/Output connections for the SJ–FB feedback board. The inverter's internal connections and parameter configuration make these signals available on intelligent input and output terminals.

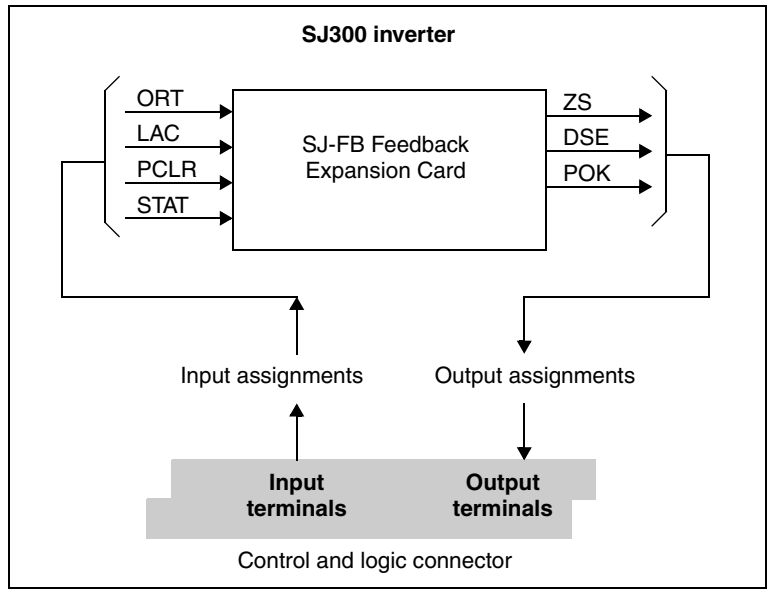

The information on outputs related to the SJ-FB expansion card is in "Expansion Card Output Signals" on page 4–58.

Using Intelligent Output Terminals

The intelligent output terminals are programmable in a similar way to the intelligent input terminals. The inverter has several output functions that you can assign individually to five physical logic outputs. Along with these solid-state outputs, the alarm relay output has type Form C (normally open and normally closed) contacts. The relay is assigned the alarm function by default, but you can assign it to any of the functions that the open-collector outputs can use.

Sinking outputs (open collector)

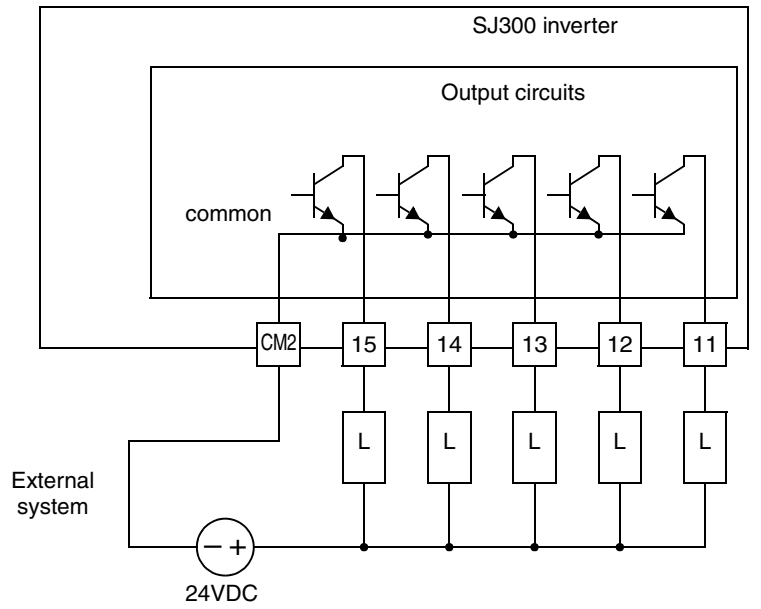



TIP: The open-collector transistor outputs can handle up to 50mA each. We highly recommend that you use an external power source as shown. It must be capable of providing at least 250mA to drive the outputs at full load.

If you need output current greater than 50mA, use the inverter output to drive a small relay. Be sure to use a diode across the coil of the relay as shown (reverse-biased) in order to suppress the turn-off spike, or use a solid-state relay.

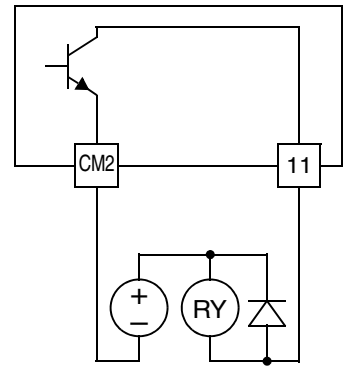

Run Signal

When the [RUN] signal is selected as an intelligent output terminal, the inverter outputs a signal on that terminal when it is in Run Mode. The output logic is active low, and is the open collector type (switch to common).

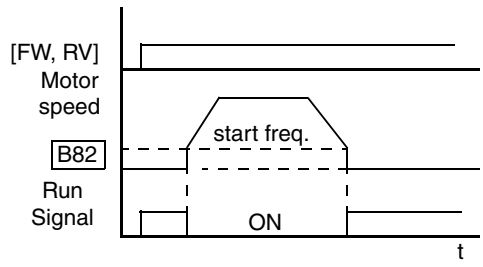

Opt. Code	Symbol	Function Name	Output State	Description
00	RUN	Run signal	ON	when inverter is in Run Mode
			OFF	when inverter is in Stop Mode

Valid for outputs:	11, 12, 13, 14, 15, AL0 – AL2
Required settings:	(none)

Notes:

- The inverter outputs the [RUN] signal whenever the inverter output exceeds the start frequency specified by parameter B082. The start frequency is the initial inverter output frequency when it turns ON.

Example: (Default output configuration shown—see page 3–53.)

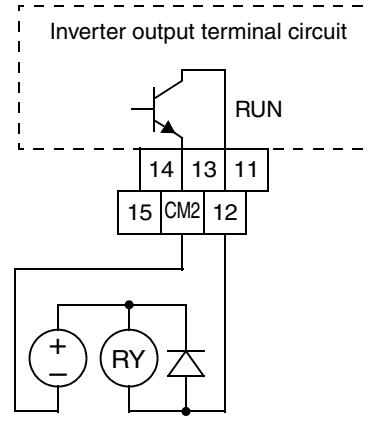

See I/O specs on page 4–9.

NOTE: The example circuit in the table above drives a relay coil. Note the use of a diode to prevent the negative-going turn-off spike generated by the coil from damaging the inverter's output transistor.

Frequency Arrival Signals

The *Frequency Arrival* group of outputs help coordinate external systems with the current velocity profile of the inverter. As the name implies, output [FA1] turns ON when the output *frequency arrives* at the standard set frequency (parameter F001). Outputs [FA2] through [FA5] provide variations on this function for increased flexibility, relying on two programmable accel/decel thresholds. For example, you can have an output turn ON at one frequency during acceleration, and have it turn OFF at a different frequency during deceleration. All transitions have hysteresis to avoid output chatter if the output frequency is near one of the thresholds.

Opt. Code	Symbol	Function Name	Output State	Description
01	FA1	Frequency arrival type 1 – constant speed	ON	when output to motor is at the standard set frequency F001
			OFF	when output to motor is not at the set frequency F001
02	FA2	Frequency arrival type 2 – over-frequency	ON	when output to motor is at or above the FA threshold 1(C042) during accel
			OFF	when the output to motor is below the FA threshold 1 (C043) during decel
06	FA3	Frequency arrival type 3 – at frequency	ON	when output to motor is at the FA threshold 1 (C042) during accel, or at C043 during decel
			OFF	when the output to motor is not at either the FA threshold 1 (C042) during accel or at C43 during decel
24	FA4	Frequency arrival type 4 – over-frequency (2)	ON	when output to motor is at or above the FA threshold 2 (C045) during accel
			OFF	when the output to motor is below the FA threshold 2 (C046) during decel
25	FA5	Frequency arrival type 5 – at frequency (2)	ON	when output to motor is at the FA threshold 2 (C045) during accel, or at C046 during decel
			OFF	when the output to motor is not at either the FA threshold 2 (C045) during accel or at C046 during decel

Valid for outputs:	11, 12, 13, 14, 15, AL0 – AL2
Required settings:	F001, for FA1 C042 & C043, for FA2 & FA3 C045 & C046, for FA4 & FA5

Notes:

- For most applications you will need to use only one or two of the frequency arrival type outputs (see example). However, it is possible assign all five output terminals to output functions [FA1] through [FA5].
- For each frequency arrival threshold, the output anticipates the threshold (turns ON early) by an amount equal to 1% of the maximum frequency set for the inverter.
- The output turns OFF as the output frequency moves away from the threshold, delayed by an amount equal to 2% of the max. frequency.

Example: (Default output configuration shown—see page 3–53.)

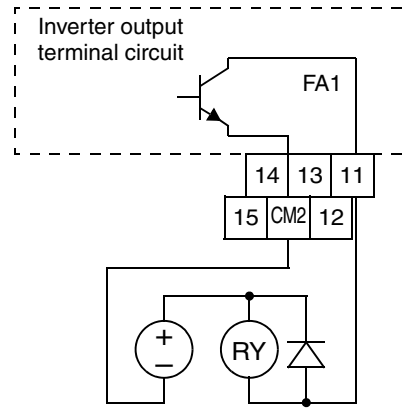

See I/O specs on page 4–9.

Frequency arrival output [FA1] uses the standard output frequency (parameter F001) as the threshold for switching. In the figure to the right, the inverter accelerates to the set output frequency, which serves as the threshold for [FA1]. Parameters F_{on} and F_{off} illustrate the hysteresis that prevents output chatter near the threshold value.

- F_{on} is 1% of the max. output frequency
- F_{off} is 2% of the max. output frequency

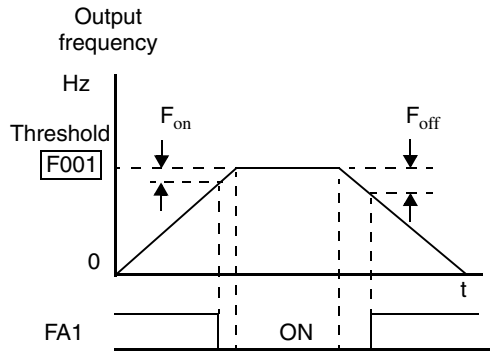

The hysteresis effect causes the output to turn ON slightly *early* as the speed approaches the threshold. Then the turn-OFF point is slightly *delayed*. The 1% and 2% values also apply to the remaining Frequency arrival outputs, discussed below.

Frequency Arrival outputs [FA2] and [FA4] work the same way; they just use two separate threshold pairs as shown in the figure. These provide for separate acceleration and deceleration thresholds to provide more flexibility than for [FA1]. [FA2] uses C042 and C045 for ON and OFF thresholds, respectively. [FA4] uses C043 and C046 for ON and OFF thresholds, respectively. Having different accel and decel thresholds provides an asymmetrical output function. However, you can use equal ON and OFF thresholds, if desired.

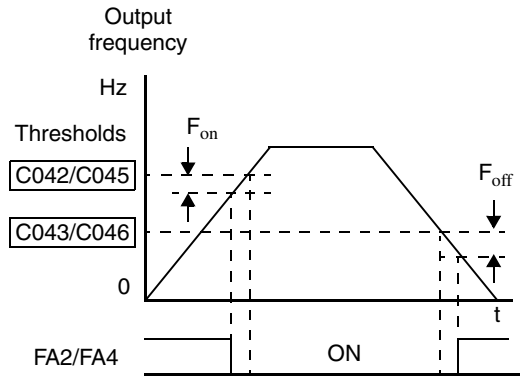

Frequency Arrival outputs [FA3] and [FA5] use the same threshold parameters as [FA2] and [FA4] above, but operate in a slightly different way. Refer to the diagram below. After the frequency arrives at the first threshold during acceleration and turns ON [FA3] or [FA5], they turn OFF again as the output frequency accelerates further. The second thresholds work similarly during deceleration. In this way, we have separate ON/OFF pulses for acceleration and deceleration.

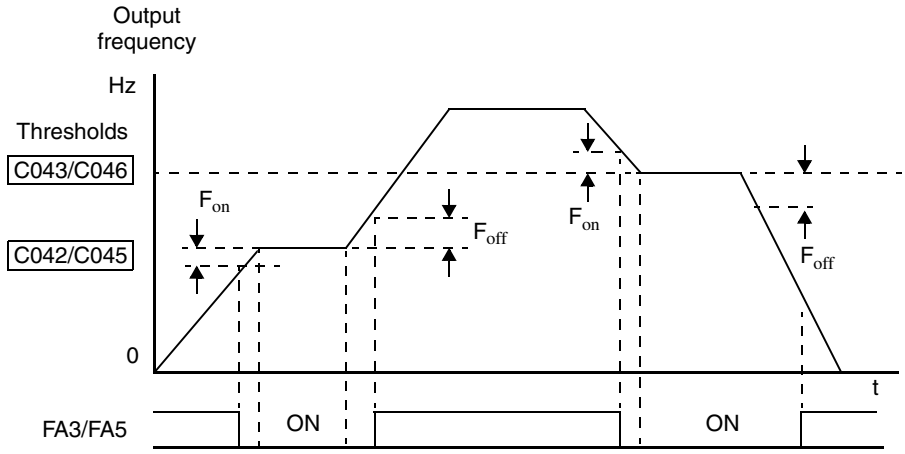

Overload Advance Notice Signal

When the output current exceeds a preset value, the [OL] or [OL2] terminal signal turns ON. The parameter C041 (or C111, respectively) sets the overload threshold. The overload detection circuit operates during powered motor operation and during regenerative braking. The output circuits use open-collector transistors, and are active low.

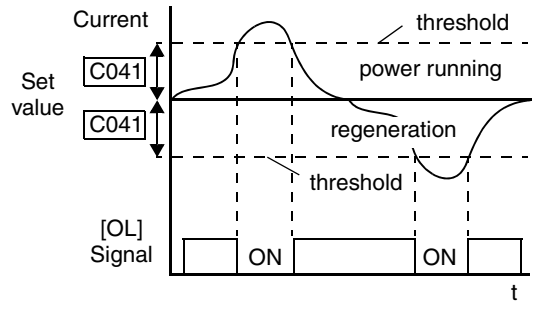

Opt. Code	Symbol	Function Name	Output State	Description
03	OL	Overload advance notice signal (1)	ON	when output current is more than the set threshold for the overload signal (C041)
			OFF	when output current is less than the set threshold for the overload signal (C041)
26	OL2	Overload advance notice signal (2)	ON	when output current is more than the set threshold for the overload signal (C111)
			OFF	when output current is less than the set threshold for the overload signal (C111)

Valid for outputs:	11, 12, 13, 14, 15, AL0 – AL2
Required settings:	C041, C111

Notes:

- The default value is 100%. To change the level from the default, set C041 or C111(overload level).
- The accuracy of this function is the same as the function of the output current monitor on the [FM] terminal (see "Analog Output Operation" on page 4–62).

Example: (Default output configuration shown—see page 3–53.)

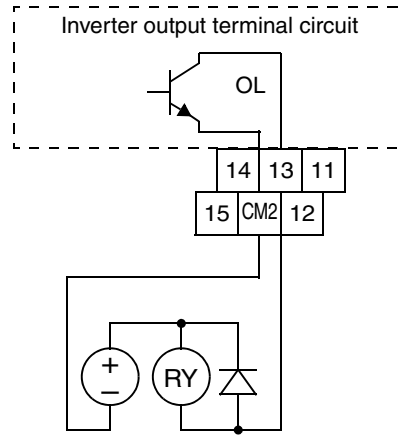

See I/O specs on page 4–9.

NOTE: The example circuit in the table above drives a relay coil. Note the use of a diode to prevent the negative-going turn-off spike generated by the coil from damaging the inverter's output transistor.

Output Deviation for PID Control

The PID loop error is defined as the magnitude (absolute value) of the difference between the Setpoint (target value) and the Process Variable (actual value). When the error magnitude exceeds the preset value for C044, the [OD] terminal signal turns ON. Refer to "PID Loop Operation" on page 4–71.

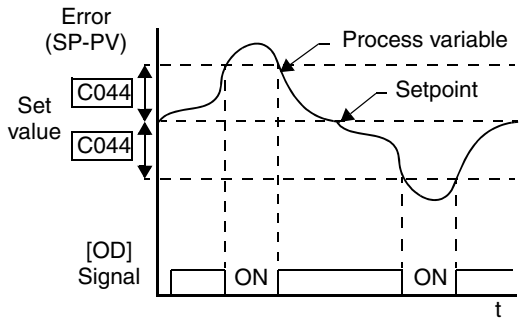

Opt. Code	Symbol	Function Name	Output State	Description
04	OD	Output deviation for PID control	ON	when PID error is more than the set threshold for the deviation signal
			OFF	when PID error is less than the set threshold for the deviation signal
Valid for outputs:		11, 12, 13, 14, 15, AL0 – AL2		Example: (Requires output configuration—see page 3–53): 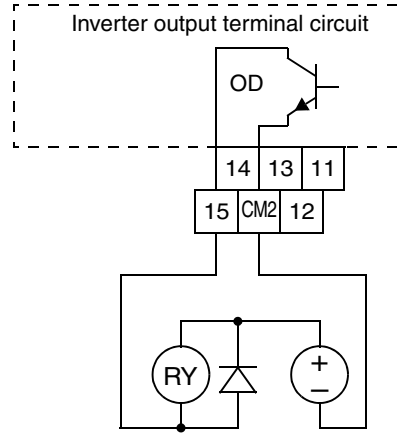 See I/O specs on page 4–9.
Required settings:		C044		
Notes: • The default deviation value is set to 3%. To change this value, change parameter C044 (deviation level).				

NOTE: The example circuit in the table above drives a relay coil. Note the use of a diode to prevent the negative-going turn-off spike generated by the coil from damaging the inverter's output transistor.

Alarm Signal

The inverter alarm signal is active when a fault has occurred and it is in the Trip Mode (refer to the diagram at right). When the fault is cleared the alarm signal becomes inactive.

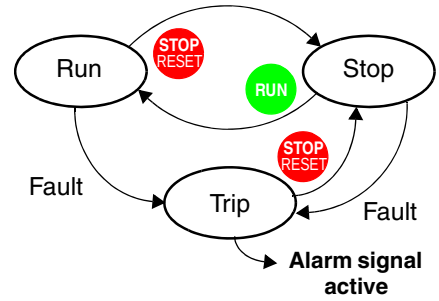

We must make a distinction between the alarm *signal* AL and the alarm relay *contacts* [AL0], [AL1] and [AL2]. The signal AL is a logic function, which you can assign to the open collector output terminals [11] to [15], or the relay outputs. The most common (and default) use of the relay is for AL, thus the labeling of its terminals. Use an open collector output (terminals [11] to [15]) for a low-current logic signal interface or to energize a small relay (50 mA maximum). Use the relay output to interface to higher voltage and current devices (10 mA minimum).

Opt. Code	Symbol	Function Name	Output State	Description
05	AL	Alarm signal	ON	when an alarm has occurred and has not been cleared
			OFF	when no alarm has occurred since the last clearing of alarm(s)

Valid for outputs:	11, 12, 13, 14, 15, AL0 – AL2
Required settings:	C026, C036

Notes:

- When the alarm output is set to normally closed, a time delay of less than 2 seconds occurs until the contact is closed when the power is turned ON.
- Terminals [11] – [15] are open collector outputs, so the electrical specifications of [AL] are different from the contact output terminals [AL0], [AL1], [AL2].
- When the inverter power supply is turned OFF, the alarm signal output is valid as long as the external control circuit has power.
- This signal output has the delay time (300ms nominal) from the fault alarm output.
- The relay contact specifications are in "Specifications of Control and Logic Connections" on page 4–9. The contact diagrams for different conditions are on the next page.

Example for terminals [11] to [15]: (Requires output configuration—see page 3–53.)

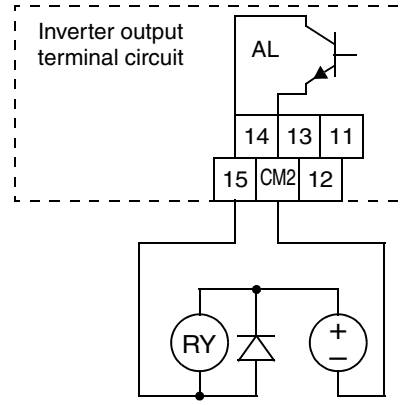

Example for terminals [AL0], [AL1], [AL2]: (Default output configuration shown—see page 3–53.)

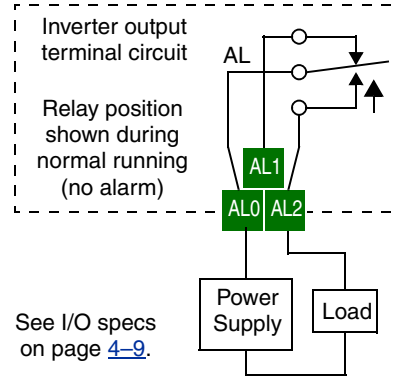

See I/O specs on page 4–9.

Operations and Monitoring

The alarm output terminals operate as shown below (left) by default. The contact logic can be inverted as shown (below right) by using the parameter setting C036. The relay contacts normally open (N.O.) and normally closed (N.O.) convention uses “normal” to mean the inverter has power and is in Run or Stop Mode. The relay contacts switch to the opposite position when it is in Trip Mode or when input power is OFF.

Contact position after initialization		**Contact position inverted by C036 setting**	
During normal running	When an alarm occurs or power is turned OFF	During normal running or power is turned OFF	When an alarm occurs
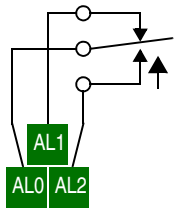	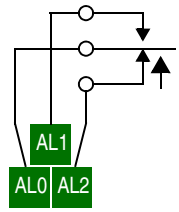	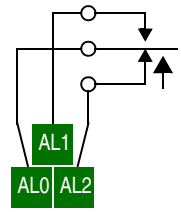	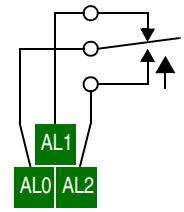

Contact	**Power**	**Run State**	**AL0-AL1**	**AL0-AL2**
N.C. (after initialize, C036=01)	ON	Normal	Closed	Open
	ON	Trip	Open	Closed
	OFF	–	Open	Closed

Contact	**Power**	**Run State**	**AL0-AL1**	**AL0-AL2**
N.O. (set C036=00)	ON	Normal	Open	Closed
	ON	Trip	Closed	Open
	OFF	–	Open	Closed

Over-torque Signal

The Over-torque function [OTQ] turns ON when the estimated value of output torque of motor increases more than the arbitrary level set for the output. Recall that the torque limit function, covered in "Torque Limit" on page 4–37, actually limits the torque during certain operating conditions. Instead, the over-torque output feature only monitors the torque, turning ON output [OTQ] if the torque is above programmable thresholds you set. The [OTQ] function is valid only for sensorless vector control, 0-Hz domain sensorless vector control, or vector control with sensor. Do not use the [OTQ] output, except for these inverter operational modes.

Code	Function/Description	Data or Range
C055	Over-torque, forward-driving level setting	0 to 200%
C056	Over-torque, reverse-regenerating, level setting	0 to 200%
C057	Over-torque, reverse-driving, level setting	0 to 200%
C058	Over-torque, forward-regenerating, level setting	0 to 200%
C021 to C025	Intelligent output terminal [11] to [15] function	07

The assignment of the Over-torque function to an output terminal [OTQ] is detailed in the following table.

Opt. Code	Symbol	Function Name	Output State	Description
07	OTQ	Over-torque	ON	when estimated torque exceeds the level set in C055 to C058
			OFF	when estimated torque is below the levels set in C055 to C058
Valid for outputs:		11, 12, 13, 14, 15, AL0 – AL2		Example: (Default output configuration shown—see page 3–53.)
Required settings:		C055, C056, C057, C058 A044 = 03 or 04 or 05		
Notes: • This output is valid only for sensorless vector control, 0-Hz domain sensorless vector control, or vector control with sensor				See I/O specs on page 4–9.

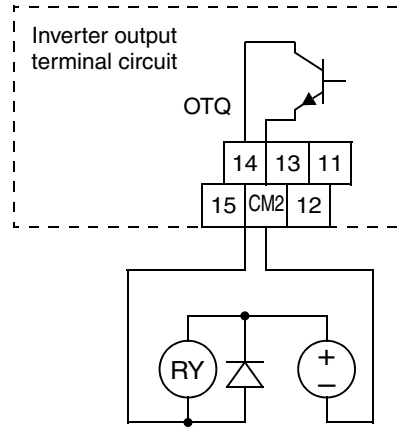

Instantaneous Power Failure / Under-voltage Signal

An instantaneous power failure (complete loss) or under-voltage condition (partial loss) of inverter input voltage can occur without warning. SJ300 Series inverters can be configured to respond to these conditions in different ways. You can select whether the inverter trips or retries (restart attempt) when an instantaneous power failure or under-voltage condition occurs. You can select the retry function with parameter B001.

When enabled, the Retry Function operates in the following ways:

- **Under-voltage conditions** – When an instantaneous power failure or under-voltage condition occurs, the inverter will attempt to restart up to 16 times. A trip condition will occur on the 17th attempt, which must be cleared with the Stop/Reset key.
- **Over-current/voltage conditions** – When retry function is selected and an over-current or an over-voltage condition occurs, a restart is attempted 3 times. A trip will occur on the 4th failed restart attempt. Use parameter B004 to select the trip and alarm response to instantaneous power failure and under-voltage conditions. The following table shows the related parameters to these power fault conditions, and timing diagrams are on the next page.

Code	Function	Data or Range	Description
B001	Selection of automatic restart mode	00	Alarm output after trip, automatic restart disabled
		01	Restart at 0 Hz
		02	Retry with frequency matching to present motor speed
		03	Retry with frequency matching followed by deceleration to stop—then trip alarm
B002	Allowable under-voltage power failure time	0.3 to 1.0 sec.	The amount of time a power input under-voltage can occur without tripping the power failure alarm. If under-voltage exists longer than this time, the inverter trips, even if the restart mode is selected. If it exists less than this time retry will be attempted.
B003	Retry wait time before motor restart	0.3 to 100 sec.	Time delay after a trip condition goes away before the inverter restarts the motor
B004	Instantaneous power failure / voltage trip alarm enable	00	Disable
		01	Enable
		02	Disable during stop and ramp to stop
B005	Number of restarts on power failure / under-voltage trip events	00	Restart up to 16 times on instantaneous power failure or under-voltage
		01	Always restart on instantaneous power failure or an under-voltage condition
B007	Restart frequency threshold	0.00 to 400.0 Hz	When frequency of the motor is less than this value, the inverter will restart at 0 Hz

Opt. Code	Symbol	Function Name	Output State	Description
08	IP	Instantaneous Power Failure	ON	when the inverter detects a loss of input power
			OFF	when the inverter has input power
09	UV	Under-voltage condition	ON	when the inverter input power is less than the specified input range
			OFF	when the inverter input power is within the voltage specification

Valid for outputs:	11, 12, 13, 14, 15, AL0 – AL2
Required settings:	B001, B002, B003, B004, B005, B007

Notes:

- If an over-voltage or over-current trip occurs during the deceleration and an instantaneous power failure error (E16) is displayed the inverter goes into free-run stop. In this case make the deceleration time longer.
- When connecting control power supply terminals [Ro]-[To] to the DC bus [P]-[N], an under-voltage may be detected at power-off and cause a trip. If this is undesirable, set B004 to 00 or 02.
- Frequency matching: The inverter reads the motor RPM and direction. If this speed is higher than the matching setting (B007), the inverter waits until they are equal and then engages the output to drive the motor (example 3). If the actual motor speed is less than the restart frequency setting, the inverter waits for t_2 (value in B003) and restarts from 0 Hz (example 4). The display shows "0000" during an actual frequency matching event.

Example: (Default output configuration shown—see page 3–53.)

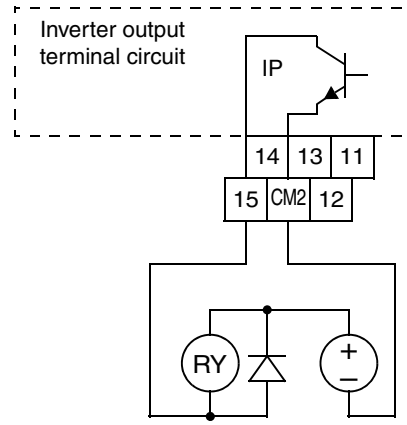

See I/O specs on page 4–9.

In the following examples, t_0= instantaneous power failure time, t_1 = allowable under-voltage / power failure time (B002), and t_2= retry wait time (B003).

Example 1: Power failure within allowed limits; resume

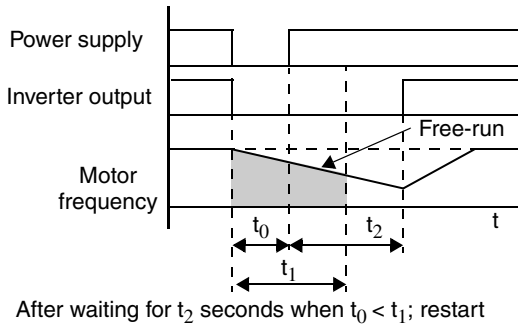

After waiting for t_2 seconds when $t_0 < t_1$; restart

Example 2: Power failure longer than limits; trip

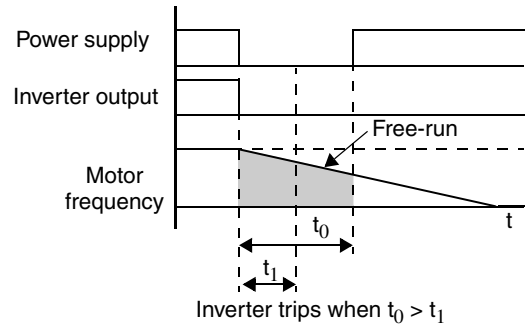

Inverter trips when $t_0 > t_1$

Examples 3 and 4 relate to configuring the inverter to retry upon power failure. Frequency matching is possible if the inverter frequency is greater than the B007 value.

Example 3: Motor resumes via frequency-matching

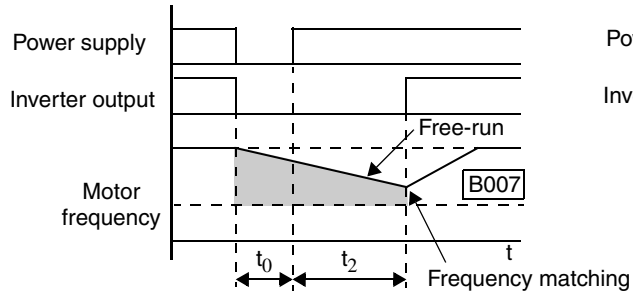

Motor frequency > B007 value at t_2

Example 4: Motor restarts from 0Hz

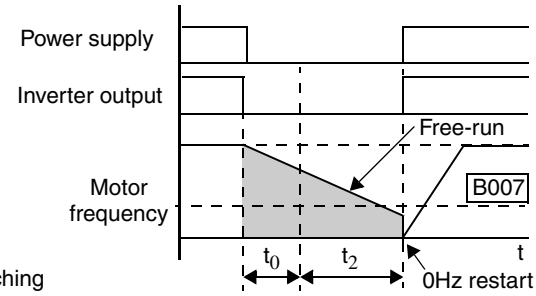

Motor frequency < B007 value at t_2

The Instantaneous Power Failure and Alarm output responses during various power loss conditions are shown in the diagram below. Use B004 to enable/disable the alarm output when instantaneous power failure or under-voltage occurs. The alarm output will continue while the control power of the inverter is present, even if the motor is stopped. Examples 5 to 7 correspond to normal wiring of the inverter's control circuit. Examples 8 to 10 correspond to the wiring of the inverter's control circuit for controlled deceleration after power loss (see "Optional Controlled Decel and Alarm at Power Loss" on page 4–4).

Instantaneous power failure operation with standard R0–T0 connections

Example 5

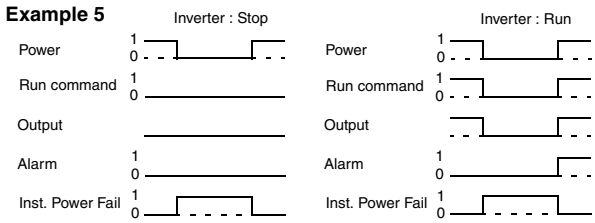

Example 6

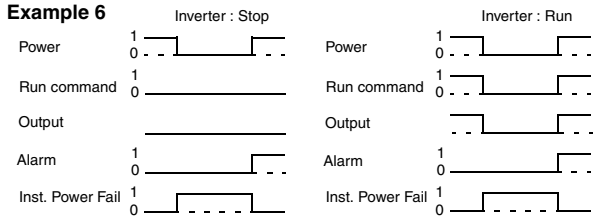

Example 7

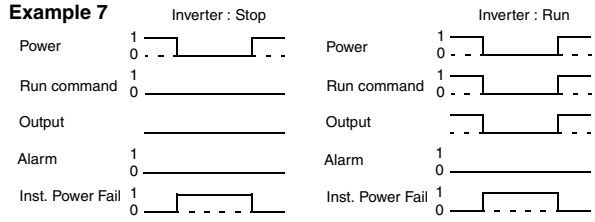

Instantaneous power failure operation with R0–T0 connected to P–N

Example 8

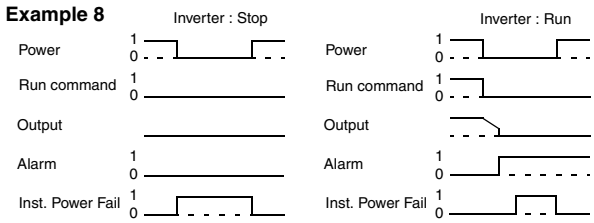

Example 9

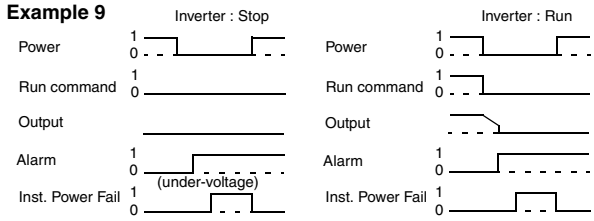

Example 10

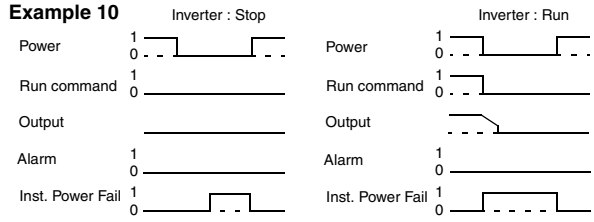

Torque Limit Signal

The Torque Limit output [TRQ] works in conjunction with the torque limit function covered in the intelligent input section. The torque limit function limits the motor torque according to the criteria selected by parameter B040. When torque limiting occurs, the [TRQ] output turns ON, then going OFF automatically when the output torque falls below the specified limits. See "Torque Limit" on page 4–37 in the intelligent input section.

Opt. Code	Symbol	Function Name	Output State	Description
10	TRQ	Torque Limit	ON	when the inverter is limiting torque
			OFF	when the inverter is not limiting torque

Valid for outputs:	11, 12, 13, 14, 15, AL0 – AL2
Required settings:	B040... if B040=00 then B041, B042, B043, B044 are required

Notes:

- The Torque Limit input [TL] must be ON in order to enable torque limiting and its related output, [TRQ].

Example: (Requires output configuration—see page 3–53.)

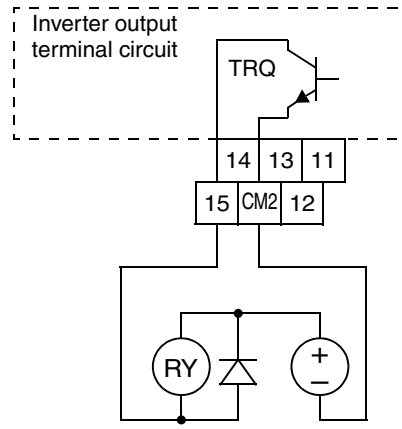

See I/O specs on page 4–9.

Run Time / Power-On Time Over Signals

SJ300 Series inverters accumulate the total hours in Run Mode (run time) and the total hours of power-ON time. You can set thresholds for these accumulating timers. Once the threshold is exceeded, an output terminal will turn ON. One use of this is for preventative maintenance. A signal light or audible alert could signal the need for servicing, calibration, etc.

Opt. Code	Symbol	Function Name	Output State	Description
11	RNT	Run Time Over	ON	when the accumulated time spent in Run Mode exceeds the limit (B034)
			OFF	when the accumulated time in Run Mode is still less than the limit (B034)
12	ONT	Power-ON Time Over	ON	when the accumulated power-ON time exceeds the limit (B034)
			OFF	when the accumulated power-ON time is less than the limit (B034)

Opt. Code	Symbol	Function Name	Output State	Description
Valid for outputs:		11, 12, 13, 14, 15, AL0 – AL2		Example: (Requires output configuration—see page 3–53.) 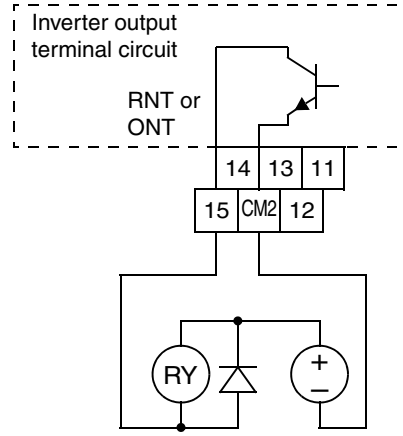 See I/O specs on page 4–9.
Required settings:		B034		
Notes: • The two outputs [RNT] and [ONT] share the same time threshold parameter, B040. Typically, you will use either the [RNT] or the [ONT] output only—not both at once. • These outputs are useful for the notification that a preventative maintenance interval has expired.				

Thermal Warning Signal

The purpose of the electronic thermal setting is to protect the motor from overloading, overheating and being damaged. The setting is based on the rated motor current. The inverter calculates the thermal rise (heating) of the motor using the current output to the motor squared, integrated over the time spent at those levels. This feature allows the motor to draw excessive current for relatively short periods of time, allowing time for cooling.

The Thermal Warning output [THM] turns ON to provide a warning before the inverter trips for electronic thermal protection. You can set a unique thermal protection level for each of the three motor profiles, as shown in the table below.

Function Code	Function/Description	Data or Range
B012 / B212 / B312	Electronic thermal setting (calculated within the inverter from current output)	Range is 0.2 * rated current to 1.2 * rated current

For example, suppose you have inverter model SJ300-110LFE. The rated motor current is 46A. The setting range is (0.2 * 46) to (1.2 *46), or 9.2A to 55.2A. For a setting of B012=46A (current at 100%), the figure to the right shows the curve.

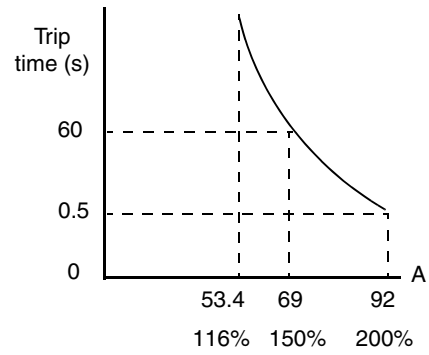

Trip current at 60 Hz

The electronic thermal characteristic adjusts the way the inverter calculates thermal heating, based on the type of torque control the inverter uses.

CAUTION: When the motor runs at lower speeds, the cooling effect of the motor's internal fan decreases.

The table below shows the settings and their meanings. Use the one that matches your load.

Function Code	Data	Function/Description
B013 / B213 /B313	00	Reduced torque
	01	Constant torque
	02	Free-setting

Reduced Torque Characteristic – The example below shows the effect of the reduced torque characteristic curve (for example motor and current rating). At 20Hz, the output current is reduced by a factor of 0.8 for given trip times.

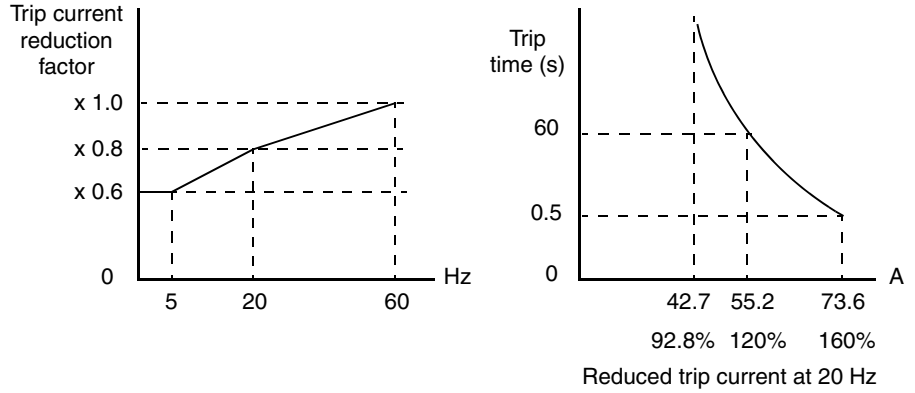

Constant Torque Characteristic – Selecting the constant torque characteristic for the example motor gives the curves below. At 2.5 Hz, the output current is reduced by a factor of 0.9 for given trip times.

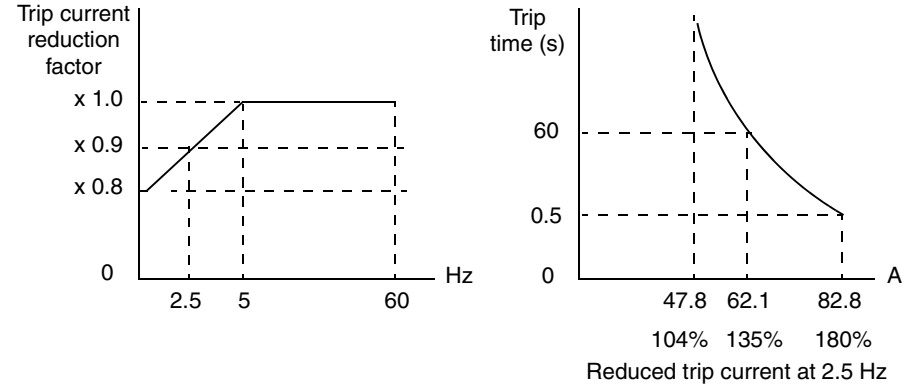

Free Thermal Characteristic - It is possible to set the electronic thermal characteristic using a free-form curve defined by three data points, according to the table below.

Function Code	Name	Description	Range
B015 / B017 / B019	Free-setting electronic thermal frequency 1, 2, 3	Data point coordinates for Hz axis (horizontal) in the free-form curve	0 to 400Hz
B016 / B018 / B020	Free setting electronic thermal current 1, 2, 3	Data point coordinates for Ampere axis (vertical) in the free-form curve	0.0 = (disable) 0.1 to 1000.

The left graph below shows the region for possible free-setting curves. The right graph below shows an example curve defined by three data points specified by B015 – B020.

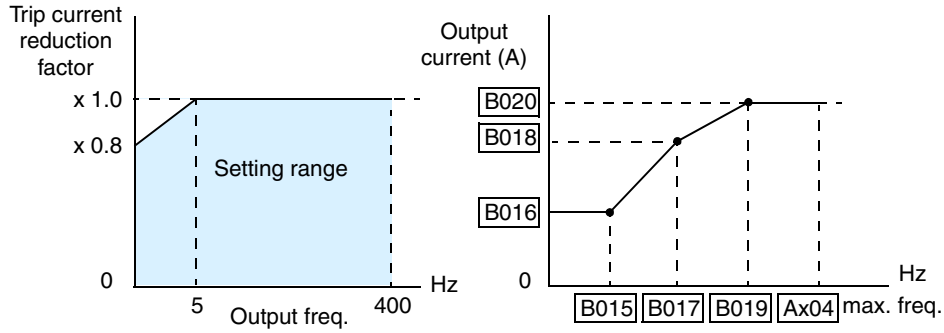

Suppose the electronic thermal setting (B012) is set to 44 Amperes. The graph below shows the effect of the free setting torque characteristic curve. For example, at (B017) Hz, the output current level to cause overheating in a fixed time period is reduced to (B018) A. Points (x), (y), and (z) show the adjusted trip current levels in those conditions for given trip times.

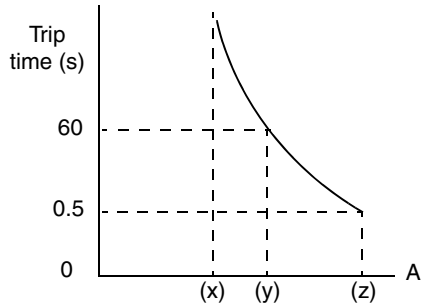

(x) = B018 value x 116%
(y) = B018 value x 120%
(z) = B018 value x 150%

Reduced trip current at (B017) Hz

Thermal Warning Output – Using parameter C061, you can set the threshold from 0 to 100% of trip level for turning ON the intelligent output [THM] at that level. In this way, the inverter provides an early warning before the electronic thermal overload trips and turns OFF the output to the motor.

Opt. Code	Symbol	Function Name	Output State	Description
13	THM	Thermal Warning	ON	when the electronic thermal calculation exceeds the set limit
			OFF	when the electronic thermal calculation is less than the set limit

Valid for outputs:	11, 12, 13, 14, 15, AL0 – AL2
Required settings:	C061

Notes:

- The electronic thermal overload function uses the output current and time to calculate thermal heating of the motor.
- The thermistor input of the inverter is a separate function from the electronic thermal function. You can set a threshold for it to cause a trip alarm at a particular thermistor resistance.

Example: (Requires output configuration—see page 3–53.)

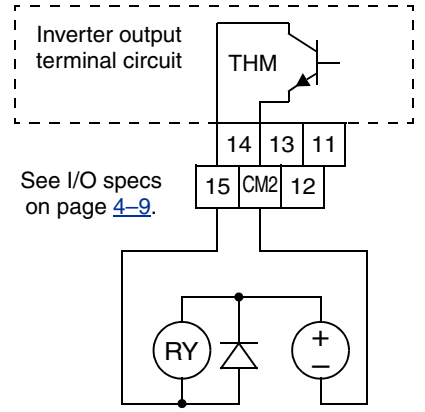

Brake Control Signals

The Brake Control function enables the inverter to control external braking systems with a particular safety characteristic. A complete discussion of the operation of brake control is in "External Brake Control Function" on page 4–39. The block diagram and table that follow describe the configuration of the outputs [BRK] Brake Release and [BER] Brake Error.

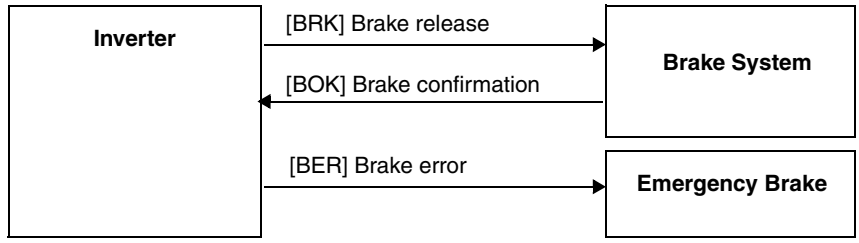

Opt. Code	Symbol	Function Name	Output State	Description
19	BRK	Brake Release	ON	when the inverter signals the external brake system to release (open) its brake
			OFF	when the inverter is not driving the motor, and needs the external brake engaged
20	BER	Brake Error	ON	when the output current is less than the set releasing current
			OFF	when the brake function is not in use, or when the output current to the motor is correct and it is safe to release the brake

Valid for outputs:	11, 12, 13, 14, 15, AL0 – AL2
Required settings:	B120, B121, B122, B123, B124, B125, B126

Notes:

- The brake release logic convention is such that an open circuit fault (such as loose wire) causes the external brake to engage.

Example: (Requires output configuration—see page 3–53.)

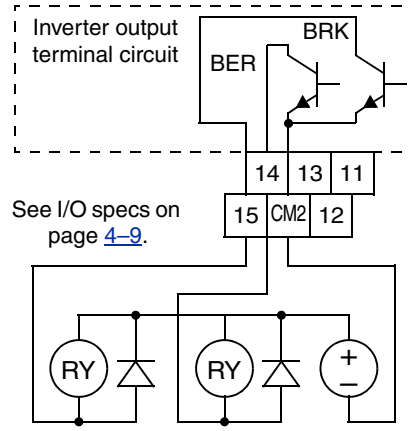

Expansion Card Output Signals

Other outputs listed below require expansion card SJ-FB Encoder Feedback board. Please see the SJ-FB manual for more information.

Opt. Code	Symbol	Function Name	Description
21	ZS	Zero Speed Detect signal	Signal indicates the encoder pulses of the motor have stopped
22	DSE	Speed Deviation Excessive	Velocity error exceeds the error threshold defined by parameter P026
23	POK	Positioning Completion	Indicates the load position is at the target

Analog Input Operation

Input Terminal Signals

The SJ300 inverters provide for an external analog input to command the inverter frequency output value. The analog input terminal group includes the [L], [OI], [O], [O2], and [H] terminals on the control connector, which provide for Voltage [O] and [O2] or Current [OI] input. All analog input signals must use the analog ground [L].

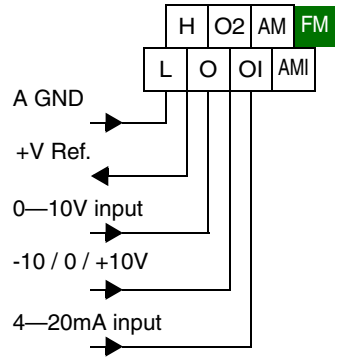

If you use either the voltage or current analog input, you must select one of them using the logic input terminal function [AT] analog type. If terminal [AT] is OFF, the voltage input [O] can command the inverter output frequency. If terminal [AT] is ON, the current input [OI] can command the inverter output frequency. The [AT] terminal function is covered in "Analog Input Current/ Voltage Select" on page 4–26. Remember that you must also set A001 = 01 to select analog input as the frequency source.

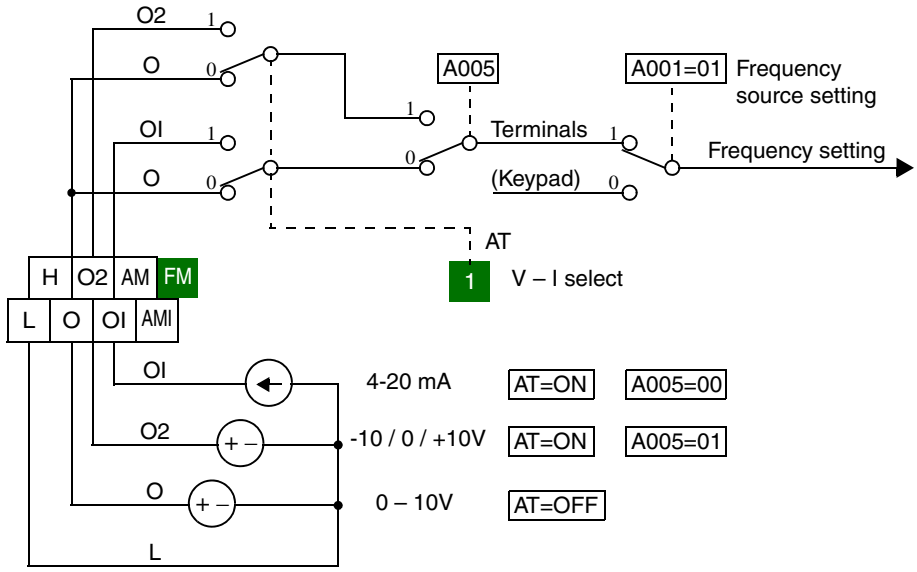

Input Filter

Parameter A016 adjusts an analog input sampling filter that evenly affects all analog inputs shown above. The parameter range is from 1 to 30. Before increasing the filter setting, we recommend trying to find the cause of input analog noise. Check for the following:

- Look for nearby high-current wiring—avoid any parallel runs to the analog signal wires
- Check the impedance between the chassis grounds of the inverter and the analog signal source equipment—a good connection will have a low impedance
- Check the analog signal ground impedance from the inverter to the analog signal source
- Avoid ground loops... measure the current (or voltage drop) on the chassis ground and signal ground connections; the ideal value is zero

After taking steps to minimize the analog signal noise sources, increase the filter time constant (A016) until the motor output frequency (when commanded by analog inputs) becomes stable.

The following tables show the available analog input settings. Parameters A006, A005, and input terminal [AT] determine the External Frequency Command input terminals that are available and how they function. The Trim Frequency input [O2]—[L] is available (when check marked) for some settings. Other settings make the reverse direction (in addition to forward) available for bipolar input settings (when check marked). A bipolar input responds to positive input voltages with a forward motor rotation, and to negative input voltages with reverse motor rotation.

A006	A005	[AT]	External Frequency Command Input	Trim Frequency Command Input	Reverse avail. (bipolar input)
00 OR 03	00	OFF	[O]	✘	✘
		ON	[OI]	✘	✘
	01	OFF	[O]	✘	✘
		ON	[O2]	✘	✔
01	00 Example 1	OFF	[O]	[O2]	✘
		ON	[OI]	[O2]	✘
	01	OFF	[O]	[O2]	✘
		ON	[O2]	✘	✔
02	00 Example 2	OFF	[O]	[O2]	✔
		ON	[OI]	[O2]	✔
	01	OFF	[O]	[O2]	✔
		ON	[O2	✘	✔

The table below applies when the [AT] input function is not assigned to *any* intelligent input terminal. The A005 setting, normally used in conjunction with an [AT] input, is ignored.

A006	A005	[AT]	External Frequency Command Input	Trim Frequency Command Input	Reverse avail. (bipolar input)
00	—	(not assigned to any input terminal)	[O2]	✘	✔
01	—		Summation of [O] and [OI]	[O2]	✘
02	—		Summation of [O] and [OI]	[O2]	✔
03	—		Summation of [O] and [OI]	✘	✘

CAUTION: Whenever the [AT] input function is *not* assigned to any input terminal and reverse rotation is not desired or is unsafe, be sure to set A006 = 01. This setting makes the [O2] input unipolar only.

The examples below show how the use of the [AT] input during operation enables/disables the Trim Frequency Command input [O2]—[L]. The [O2]—[L] input may be used alone, or as an offset control for the primary analog input.

Example 1: Without reverse

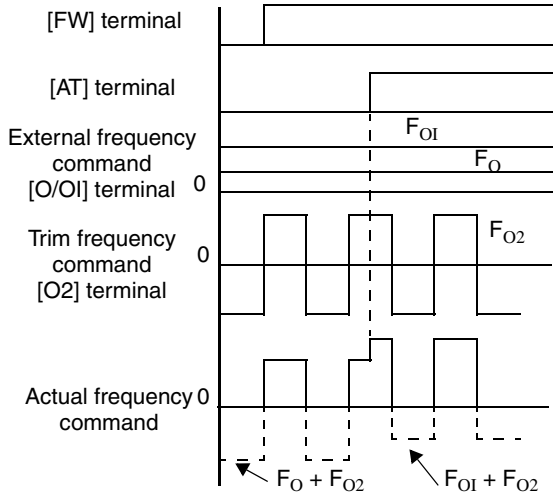

Example 2: With reverse

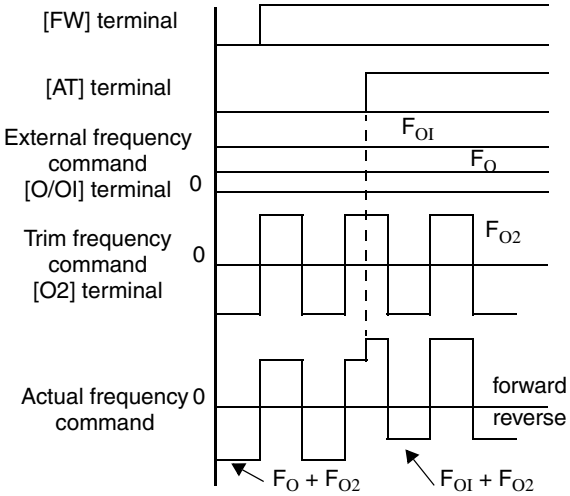

Wiring Examples

Using an external potentiometer is a common way to control the inverter output frequency (and a good way to learn how to use the analog inputs). The potentiometer uses the built-in 10V reference [H] and the analog ground [L] for excitation, and the voltage input [O] for the signal. By default, the [AT] terminal selects the voltage input when it is OFF. Take care to use the proper resistance for the potentiometer, which is 1 to 2kΩ, 2 Watts.

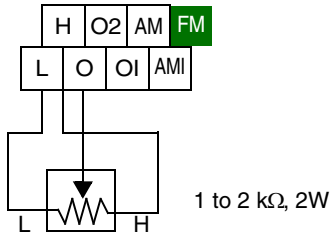

Voltage Input – The 0–10V voltage input circuit uses terminals [L] and [O]. Attach the signal cable's shield wire to terminal [L] on the inverter only. DO NOT ground the shield at its other end. Maintain the voltage within specifications (do not apply negative voltage). Normally a full-span input level (10V) will give the maximum motor frequency. You can use parameter A014 to select a lower voltage for full output frequency (such as using a 5V input signal).

Bipolar Voltage Input – The -10 / 0 / +10V voltage input circuit uses terminals [L] and [O2]. Attach the cable's shield wire to terminal [L] on the inverter only. Maintain the voltage within specifications. Only apply a negative voltage if this input is configured for bipolar use.

Current Input – The current input circuit uses terminals [OI] and [L]. The current comes from a *sourcing* type transmitter; a *sinking* type will not work! This means the current must flow into terminal [OI], and terminal [L] is the return back to the transmitter. The input impedance from [OI] to [L] is 250 Ohms. Attach the cable's shield wire to terminal [L] on the inverter only.

Standard Voltage Input

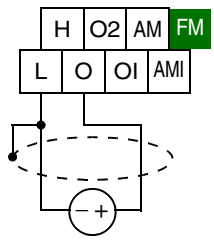

0 to 9.6 VDC,
0 to 10V nominal

Bipolar Voltage Input

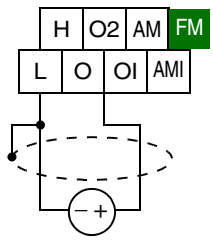

-10 to 9.6 VDC,
0 to 10V nominal

Current Input

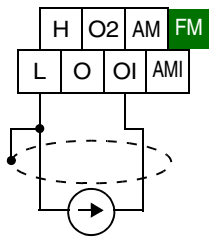

4 to 19.6 mA DC,
4 to 20 mA nominal

See I/O specs on page 4–9.

Analog Output Operation

In the system design for inverter applications it is sometimes useful to monitor inverter operation from a remote location. In some cases, this requires only a panel-mounted analog meter (moving-coil type). In other cases, a controller device such as a PLC may monitor and command the inverter frequency and other functions. The inverter can transmit the (real-time) output frequency, current, torque, or other parameters to the controller to confirm actual operation. The monitor output terminal [FM] serves these purposes.

[FM] Terminal

The inverter provides an analog/digital output on terminal [FM] (frequency monitor). It uses terminal [CM1] as digital GND reference. While many applications use this terminal to monitor the output frequency, you can configure terminal [FM] to transmit one of several parameters. Most use *pulse-width modulation* (PWM) to represent the value, while one parameter uses *frequency modulation* (FM) to represent the value. Do not confuse the notation for terminal [FM] (with brackets) with FM signal type.

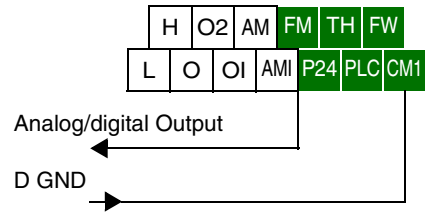

See I/O specs on page 4–9.

The following table lists the configurations for terminal [FM]. Use function C027 to configure.

Func.	Code	Description	Waveform	Full Scale Value
C027	00	Output frequency	PWM	0 – Max. frequency (Hz)
	01	Output current	PWM	0 – 200%
	02	Output torque *1	PWM	0 – 200%
	03	Output frequency	FM	0 – Max. frequency (Hz)
	04	Output voltage	PWM	0 – 100%
	05	Input electric power	PWM	0 – 200%
	06	Thermal load ratio	PWM	0 – 100%
	07	LAD frequency	PWM	0 – Max. frequency (Hz)

Note 1: Display substitutes only during sensorless vector control, 0Hz domain sensorless vector control, and vector control

PWM Signal Type

The *pulse-width modulated* signal at terminal [FM] is primarily designed for driving a moving-coil meter. The pulse-width modulated signal is automatically averaged by the inertia of the moving-coil mechanism—converting the PWM signal to an analog representation. Be sure to use a 10V full-scale DC voltmeter.

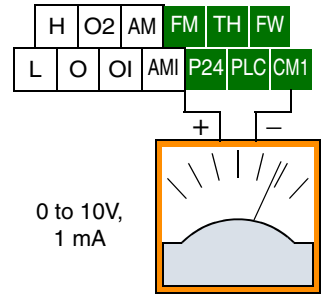

The signal characteristics of terminal [FM] in PWM signal configuration is shown below

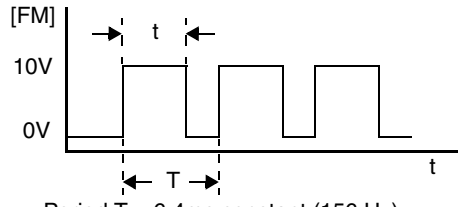

Period T = 6.4ms constant (156 Hz)

[FM] output value $= \frac{t}{T}$

B081 = [FM] terminal 8-bit gain setting

C27=00, 01, 02, 04, 05, 06, 07
Selects FM type output

To calibrate the meter reading, generate a full-scale output (always ON) at terminal [FM]. Then use parameter B081(gain setting from 0 to 255) to adjust the corresponding full-scale reading of the meter. For example, when the inverter output frequency is 60 Hz, change the value of B081 so that the meter reads 60 Hz.

TIP: When using the analog meter for monitoring, adjust the meter so it has a zero reading when the [FM] output is zero. Then use scale factor B081 to adjust the [FM] output so the maximum frequency in the inverter corresponds to a full-scale reading on the meter.

NOTE: The indicator accuracy after adjustment is about ±5%. Depending on the motor, the accuracy may exceed this value.

PWM Smoothing Circuit – Note that standard analog output signals are available on terminals [AM] and [AMI], covered in the next section. However, you may also wish to smooth the PWM signal at the [FM] terminal and convert it to an analog signal. The [FM] terminal will then generate a relatively stable DC analog voltage that represents the output value. To do this, use the circuit shown to the right. Note the output impedance of the circuit is at least 82kΩ, so the monitoring device needs an input impedance of 1MΩ or greater. Otherwise, the impedance of the smoothing circuit will cause a non-linearity in the reading.

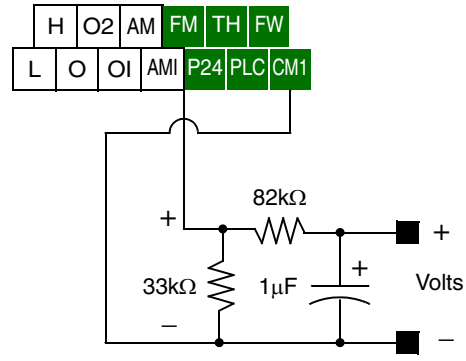

FM Signal Type

The *frequency-modulated* output at terminal [FM] varies its frequency with the inverter output frequency (when C027=03). The signal at [FM] uses the parameter A004 *Maximum frequency setting*. For example, if A004 = 60 Hz, then the maximum signal value at [FM] will be at 60 Hz. This frequency is digitally controlled for accuracy, and does not use the B081 gain setting when C027=03 (frequency modulation).

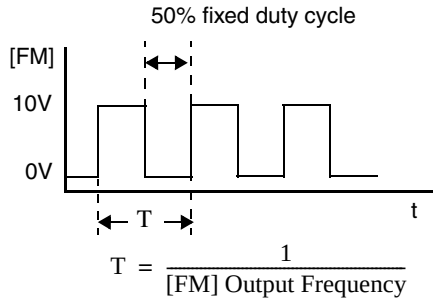

$$T = \frac{1}{\text{[FM] Output Frequency}}$$

$$\text{[FM] Output Frequency} = \frac{1}{T}$$

C027=03 Selects FM type output

[AM] and [AMI] Terminals

The [AM] and [AMI] terminals provide signals to monitor various inverter parameters such as output frequency, output current, and torque. The terminals provide these analog signal types:

- [AM] terminal: 0–10V analog output signal
- [AMI] terminal: 4–20mA analog output signal

These signals both use the [L] terminal for signal return. Eight different inverter parameters may be monitored independently at either the [AM] or [AMI] terminal, as listed in the table below. Use C028 to configure terminal [AM], and C029 to configure terminal [AMI].

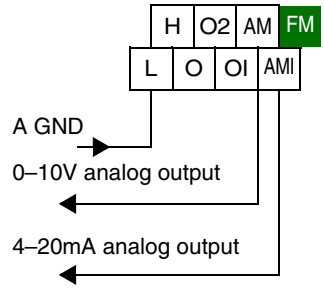

See I/O specs on page 4–9.

Func.	Terminal	Code	Description	Full Scale Value
C028 / C029	[AM] / [AMI]	00	Output frequency	0 – Max. frequency (Hz)
		01	Output current	0 – 200%
		02	Output torque *1	0 – 200%
		04	Output voltage	0 – 100%
		05	Input electric power	0 – 200%
		06	Thermal load ratio	0 – 100%
		07	LAD frequency	0 – Max. frequency (Hz)

Note 1: Display of torque is possible only during sensorless vector control, 0Hz domain sensorless vector control, and vector control with feedback

The analog signals may need some adjustment for gain or offset to compensate for variances in the system. For example, the signals may drive a panel meter and require a full-scale gain adjustment. The table below lists the function codes and their descriptions. The [AM] and [AMI] terminals have separate gain and offset adjustments. Note the default values.

Func.	Terminal	Description	Range	Default
B080	[AM]	Gain adjustment	0 – 255	180
C086	[AM]	Offset Adjustment	0.0 – 10.0V	0.0V
C087	[AMI]	Gain adjustment	0 – 255	80
C088	[AMI]	Offset Adjustment	0.0 – 20.0mA	0.0mA

Setting Motor Constants for Vector Control

Introduction

These advanced torque control algorithms improve performance, particularly at low speeds:

- **Sensorless Vector Control –** improved torque control at output frequencies down to 0.5 Hz. Use A044=03 (1st motor) or A244=03 (2nd motor) to select sensorless vector control.
- **Sensorless Vector Control, 0Hz Domain –** improved torque control at output frequencies from 0 to 2.5 Hz. Use A044=04 (1st motor) or A244=04 (2nd motor) to select sensorless vector control, 0Hz domain.
- **Vector Control with Feedback –** improved torque control at all speeds, while providing the most accurate speed regulation of all torque control algorithms. Use A044=05 to select vector control with feedback.

These three control algorithms require the inverter's motor constants to accurately match the characteristics of the particular motor connected to your inverter. Simply using the inverter's default parameters with the vector control modes may not produce satisfactory results. The auto-tuning procedure described later in this section is recommended for most applications needing vector control. It determines and records the characteristics of the attached motor. However, it is possible to enter the motor constants directly if the motor manufacturer has provided that data.

After performing an initial auto-tuning procedure for your motor, you have an additional option: adaptive tuning. The adaptive tuning parameters use the auto-tuning procedure's results as starting values. Then, each time the motor runs normally in your application, the inverter tunes the parameters again to match the motor. This compensates for temperature changes, etc., further optimizing the values.

The following table lists the parameters associated with motor constant settings. Function H002 selects the set of motor constants that you want the inverter to use in normal use. Standard constants (select with H002=00) include H020 to H024. Auto-tuned constants (select with H002=01) include H030 to H034. Remember that you have to do the auto-tuning procedure in this section before using either auto-tuned constants or the adaptive mode (H002=02).

Func.	Name	Data	Notes
A044 / A244 / A344	V/f characteristic curve selection, 1st / 2nd / 3rd motors	00	V/f constant torque
		01	V/f variable torque
		02	V/f free-setting curve
		03	Sensorless vector control (SLV)
		04	Sensorless vector control, 0Hz domain
		05	Vector control with encoder feedback
H002	Motor data selection, 1st motor	00	Standard motor parameters
		01	Auto-tuning parameters
		02	Adaptive tuning parameters
H003	Motor capacity, 1st motor	0.2 – 75, 0.2 – 160	kW, up to –550xxx models kW, –750xxx to –1500xxx models
H004	Motor poles setting, 1st motor	2 / 4 / 6 / 8	Units: poles
H020	Motor constant R1, 1st motor	0.000–65.53	Units: ohms
H021	Motor constant R2, 1st motor	0.000–65.53	Units: ohms
H022	Motor constant L, 1st motor	0.00–655.3	Units: mH
H023	Motor constant Io, 1st motor	0.00–655.3	Units: A
H024	Motor constant J, 1st motor	0.001–9999	Units: kgm^2
H030	Auto-tuned constant R1, 1st motor	0.000–65.53	Units: ohms

Func.	Name	Data	Notes
H031	Auto-tuned constant R2, 1st motor	0.000–65.53	Units: ohms
H032	Auto-tuned constant L, 1st motor	0.00–655.3	Units: mH
H033	Auto-tuned constant Io, 1st motor	0.00–655.3	Units: A
H034	Auto-tuned constant J, 1st motor	0.001–9999	Units: kgm^2

The inverter has three separate motor constant sets named *1st*, *2nd*, and *3rd*. The 1st motor constant set is the default, while the SET and SET2 intelligent inputs select the 2nd and 3rd constant sets, respectively. The torque control methods are valid to use only if a particular motor constant set includes parameters for the selected control method. The following table lists the vector control methods and shows the ones that are valid for each motor constant set.:

Vector Control Method	1st motor	2nd motor	3rd motor
V/f constant torque	✔	✔	✔
V/f variable torque	✔	✔	✔
V/f free-setting curve	✔	✔	✘
Sensorless vector control (SLV)	✔	✔	✘
Sensorless vector control, 0Hz domain	✔	✔	✘
Vector control with encoder feedback	✔	✘	✘

The motor data selection is available only to the 1st motor constant set, selected by function H004. By default, the 2nd and 3rd motor constants sets only store standard motor parameters. The table below shows this arrangement.

Motor data selection	1st motor	2nd motor	3rd motor
Standard motor parameters	✔	✔	✔
Auto-tuning parameters	✔	✘	✘
Adaptive tuning parameters	✔	✘	✘

When motor constant values are available from the motor manufacturer, you can enter them directly. The available motor constant parameters (storage locations) depend on the motor constant set (1st, 2nd, or 3rd) according to the following table.

Motor data selection	1st motor	2nd motor	3rd motor
Standard motor parameters	H020 to H024	H220 to H224	—
Auto-tuning parameters	H030 to H034	—	—
Adaptive tuning parameters	H030 to H034	—	—

Auto-tuning of Motor Constants

The SJ300 inverter features auto-tuning, which detects and records the motor characteristic parameters to use in all vector control modes. Auto-tuning determines the resistance and inductance of motor windings. Therefore, the motor must be connected to the inverter for this procedure. Note that the auto-tuning feature is not associated with PID loop operation, which is common on some control devices. The auto-tuning procedure must be conducted while the inverter is stopped (not in Run mode), so it can use special output pulses to detect motor characteristics.

When using the inverter in sensorless vector control, sensorless vector control - 0Hz domain, or vector control with encoder feedback, the motor circuit constants are important. If they are unknown, then you must first conduct the auto-tuning procedure. The inverter will determine the constants and write new values for the related "H" Group settings. The auto-tuning procedure requires that the inverter be configured to operate the 1st motor (do not set the inverter to use 2nd and 3rd motor data during an auto-tuning procedure).

Func.	Name	Range	Notes
H001	Auto-tuning setting	00	Disabled
		01	Enabled, without motor rotation
		02	Enabled, with motor rotation
H002	Motor data selection, 1st motor	00	Standard motor parameters
		01	Auto-tuning parameters
		02	Adaptive tuning parameters
H003	Motor capacity, 1st motor	0.2 – 75, 0.2 – 160	kW, up to –550xxx models kW, –750xxx to –1500xxx models
H004	Motor poles setting, 1st motor	2 / 4 / 6 / 8	Units: poles
H030	Auto-tuned motor constant R1, 1st motor	—	Units: ohms
H031	Auto-tuned motor constant R2, 1st motor	—	Units: ohms
H032	Auto-tuned motor constant L, 1st motor	—	Units: mH
H033	Auto-tuned motor constant Io, 1st motor	—	Units: A
H034	Auto-tuned motor constant J, 1st motor	—	Units: kgm^2
A003	Base frequency setting	30 to maximum freq.	Units: Hz
A051	DC braking enable	00	Disabled (Disable during auto-tuning)
		01	Enabled
A082	AVR voltage select	200/215/220/230/240	Valid for 200V class inverters
		380/400/415/440/460/480	Valid for 400V class inverters

Please read the following Warning before running the auto-tuning procedure on the next page.



WARNING: You may need to disconnect the load from the motor before performing auto-tuning. The inverter runs the motor forward and backward for several seconds without regard to load movement limits.

Preparation for Auto-tuning Procedure – Be sure to study the preparation items and verify the related inverter configuration before going further in this procedure.

1. Adjust the motor base frequency (A003) and the motor voltage selection (A082) to match the specifications of the motor used in the auto-tuning procedure.
2. Verify that the motor is not more than one frame size smaller than the rated size for he inverter. Otherwise, the motor characteristic measurements may be inaccurate.
3. Be sure that no outside force will drive the motor during auto-tuning.
4. If DC braking is enabled (A051=01), the motor constants will not be accurately set. Therefore, disable DC braking (A051=00) before starting the auto-tuning procedure.
5. When auto-tuning with motor rotation (H001=02), take care to verify the following points:
   a. The motor will rotate up to 80% of the base frequency; make sure that this will not cause any problem.
   b. Do not attempt to either run or stop the motor during the auto-tuning procedure unless it is an emergency. If this occurs, initialize the inverter's parameters to the factory default settings (see "Restoring Factory Default Settings" on page 6–9). Then reprogram the parameters unique to your application, and initiate the auto-tuning procedure again.
   c. Release any mechanical brake that would interfere with the motor rotating freely.
   d. Disconnect any mechanical load from the motor. The torque during auto-tuning is not enough to move some loads.
   e. If the motor is part of a mechanism with limited travel (such as lead screw or elevator), select H001=01 so that the auto-tuning will not cause motor rotation.
6. Note that even when you select H001=01 for no rotation, sometimes the motor will rotate.
7. When using a motor that is one frame size smaller than the inverter rating, enable the overload restriction function. Then set the overload restriction level to 1.5 times the rated output current of the motor.

Auto-tuning Procedure

After the preparations above are complete, perform the auto-tuning procedure by following the steps below.

1. Set H001=01 (auto-tuning *without* motor rotation) or H001=02 (auto-tuning *with* motor rotation).
2. Turn the Run command ON. The inverter will then automatically sequence through the following actions:
   a. First AC excitation (motor does not rotate)
   b. Second AC excitation (motor does not rotate)
   c. First DC excitation (motor does not rotate)
   d. V/F running—this step occurs only if H001=02 (motor accelerates up to 80% of the base frequency)
   e. SLV running—this step occurs only if H001=02 (motor accelerates up to x% of the base frequency), where "x" varies with time T during this step:
      x=40% when T < 50s
      x=20% when 50s < T < 100s
      x=10% when T => 100s
   f. Second DC excitation
   g. Displays the pass/fail result of the auto-tuning (see next page)



NOTE: During the AC and DC motor excitation steps above, you may notice that the motor makes a slight humming sound. This sound is normal.

If the auto-tuning procedure is successful, the inverter updates the motor characteristic parameters and indicates *normal termination* of the procedure as shown. Pressing any key on the keypad will clear the result from the display.

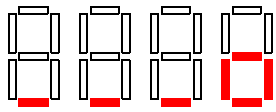
Normal termination

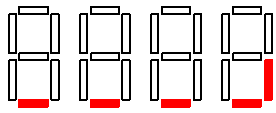
Abnormal termination

- **Trip during auto-tuning –** A trip event will cause the auto-tuning sequence to quit. The display will show the error code for the trip rather than the abnormal termination indication. After eliminating the cause of the trip, then conduct the auto-tuning procedure again.
- **Power loss or stop during auto-tuning –** If the auto-tuning procedure is interrupted by power loss, the Stop key, or by turning OFF the Run command, the auto-tuning constants may or may not be stored in the inverter. It will be necessary to restore the inverter's factory default settings (see "Restoring Factory Default Settings" on page 6–9). After initializing the inverter, then perform the auto-tuning procedure again.
- **Free V/F setting –** The auto-tuning procedure will have an abnormal termination if the control mode of the inverter is set for free V/F setting.

Adaptive Auto-tuning of Motor Constants

The adaptive auto-tuning feature refines the motor constants by checking the motor characteristic while it in the normal running temperature range.

Preparation for Adaptive Auto-tuning – Be sure to study the preparation items and verify the related inverter configuration before going further in this procedure.

1. It is necessary to first perform the auto-tuning procedure in the section above, since adaptive auto-tuning requires accurate initial constant values.
2. Adaptive auto-tuning is valid only for the 1st motor data (do not use 2nd or 3rd motor data settings).
3. The adaptive auto-tuning sequence actually begins as the motor decelerates to a stop from a Run command you initiate. However, the sequence still continues for five (5) more seconds. Giving another Run command during this 5-second time period will halt the adaptive auto-tuning. It will resume the next time the motor runs and decelerates to a stop.
4. If DC braking is enabled, then the adaptive auto-tuning sequence executes after DC braking brings the motor to a stop.

After reading and following the preparation steps above, then configure the inverter for adaptive auto-tuning by following these steps:

1. Set H002=02 for adaptive auto-tuning procedure
2. Set H001=00 to disable the (manual) auto-tuning procedure
3. Turn the Run command ON.
4. Run the motor for an appropriate time until it reaches its normal operating temperature range. Remember that the purpose of adaptive auto-tuning is optimize the inverter for typical running conditions.
5. Stop the motor (or turn the Run command OFF), which initiates an adaptive auto-tuning. Wait at least five (5) seconds before issuing any other command to the inverter.

With the above configuration, the inverter automatically runs the adaptive auto-tuning sequence each time the motor runs and decelerates to a stop. This continuously adapts the SLV control algorithm to slight changes in the motor constants during operation.



NOTE: It is not necessary to wait 5 seconds after each time the motor runs before running again. When the motor stops for less than 5 seconds before running again, the inverter stops the adaptive tuning sequence and keeps the current motor constant values in memory. The inverter will attempt the adaptive auto-tuning at the next run/stop event of the motor.

Manual Setting of Motor Constants

With vector control, the inverter uses the output current, output voltage, and motor constants to estimate the motor torque and speed. It is possible to achieve a high starting torque and accurate speed control at low frequency

- **Sensorless Vector Control –** improved torque control at output frequencies down to 0.5 Hz. Use A044=03 (1st motor) or A244=03 (2nd motor) to select sensorless vector control.
- **Sensorless Vector Control, 0Hz Domain –** improved torque control at output frequencies from 0 to 2.5 Hz. Use A044=04 (1st motor) or A244=04 (2nd motor). For this vector control method, we recommend using a motor that is one frame size smaller than the inverter size.
- **Sensorless Vector Control with Feedback –** improved torque control at all speeds, while providing the most accurate speed regulation

If you do use any vector control methods, it is important that the motor constants stored in the inverter match the motor. We recommend first using the auto-tuning procedure in the previous section. If satisfactory performance through auto-tuning cannot be fully obtained, please adjust the motor constants for the observed symptoms according to the table below.



CAUTION: If the inverter capacity is more than twice the capacity of the motor in use, the inverter may not achieve its full performance specifications.

Operation Status	Symptom	Adjustment	Parameter
Powered running	When the speed deviation is negative	Slowly increase the motor constant R2 in relation to auto-tuning data, within 1 to 1.2 times preset R2	H021 / H221
	When the speed deviation is positive	Slowly decrease the motor constant R2 in relation to auto-tuning data, within 0.8 to 1 times preset R2	H021 / H221
Regeneration (status with a decelerating torque)	When low frequency (a few Hz) torque is insufficient	Slowly increase the motor speed constant R1 in relation to auto-tuning data within 1 to 1.2 times R1	H020 / H220
		Slowly increase the motor constant IO in relation to auto-tuning data, within 1 to 1.2 times preset IO	H023 / H223
During acceleration	A sudden jerk at start of rotation	Increase motor constant J slowly within 1 to 1.2 times the preset constant	H024 / H224
During deceleration	Unstable motor rotation	Decrease the speed response	H05, H205
		Set motor constant J smaller than the preset constant	H024, H224
During torque limiting	Insufficient torque during torque limit at low speed	Set the overload restriction level lower than the torque limit level	B021, B041 to B044
At low-frequency operation	Irregular rotation	Set motor constant J larger than the preset constant	H024, H244

When using a motor one frame size smaller than the inverter rating, the torque limit value (B041 to B044) is from the following formula and the value of the actual motor torque limit is calculated by the formula. Do not set a value in B041 to B044 that results in an actual torque greater than 200% or you risk motor failure.

For example, suppose you have a 0.75kW inverter and a 0.4kW motor. The torque limit setting value that is for T=200% is set (entered) as 106%, shown by the following formula:

$$\text{Torque limit setting} = \frac{\text{Actual torque limit} \times \text{Motor capacity}}{\text{Inverter capacity}} = \frac{200\% \times 0.4\text{kW}}{0.75\text{kW}} = 106\%$$

PID Loop Operation

In standard operation, the inverter uses a reference source selected by parameter A001 for the output frequency, which may be a fixed value (F001), a variable set by the front panel potentiometer, or value from an analog input (voltage or current). To enable PID operation, set A071 = 01. This causes the inverter to *calculate* the target frequency, or setpoint. An optional intelligent input assignment (code 23), PID Disable, will temporarily disable PID operation when active.

A calculated target frequency can have a lot of advantages. It lets the inverter adjust the motor speed to optimize some other process variable of interest, potentially saving energy as well. Refer to the figure below. The motor acts upon the external process. To control that external process, the inverter must monitor the process variable. This requires wiring a sensor to either the analog input terminal [O] (voltage) or terminal [OI] (current).

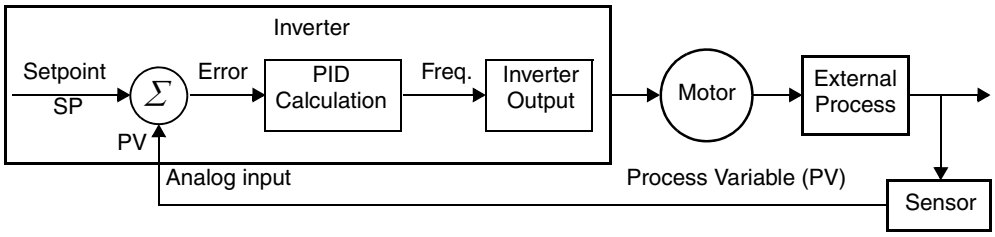

When enabled, the PID loop calculates the ideal output frequency to minimize the loop error. This means we no longer command the inverter to run at a particular frequency, but we specify the ideal value for the process variable. That ideal value is called the *setpoint*, and is specified in the units of the external process variable. For a pump application it may be gallons/minute, or it could be air velocity or temperature for an HVAC unit. Parameter A075 is a scale factor that relates the external process variable units to motor frequency. The figure below is a more detailed diagram of the PID function.

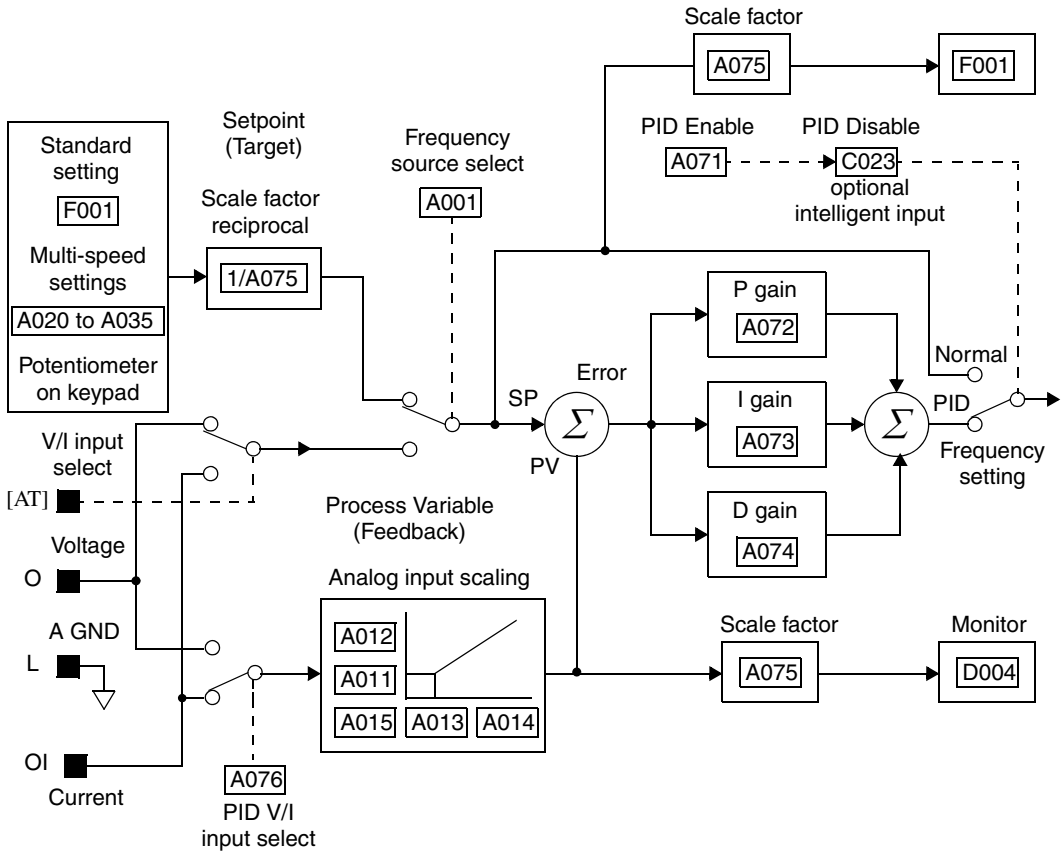

Configuring the Inverter for Multiple Motors

Simultaneous Connections

For some applications, you may need to connect two or more motors (wired in parallel) to a single inverter's output. For example, this is common in conveyor applications where two separate conveyors need to have approximately the same speed. The use of two motors may be less expensive than making the mechanical link for one motor to drive multiple conveyors.

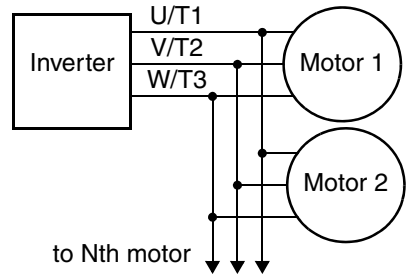

Some of the requirements when using multiple motors with one drive are:

- Use only V/F (variable-frequency) control; do not use SLV (sensorless vector control).
- The inverter output must be rated to handle the sum of the currents from the motors.
- You must use separate thermal protection switches or devices to protect each motor. Locate the device for each motor inside the motor housing or as close to it as possible.
- The wiring for the motors must be permanently connected in parallel (do not remove one motor from the circuit during operation).



NOTE: The motor speeds are identical only in theory. That is because slight differences in their loads will cause one motor to slip a little more than another, even if the motors are identical. Therefore, do not use this technique for multi-axis machinery that must maintain a fixed position reference between its axes.

Inverter Configuration for Multiple Motor Types

Some equipment manufacturers may have a single type of machine that has to support three different motor types—and only one motor will be connected at a time. For example, an OEM may sell basically the same machine to the US market and the European market. Some reasons why the OEM needs two motor profiles are:

- The inverter power input voltage is different for these markets.
- The required motor type is also different for each destination.

In other cases, the inverter needs two profiles because the machine characteristics vary according to these situations:

- Sometimes the motor load is very light and can move fast. Other times the motor load is heavy and must move slower. Using two profiles allows the motor speed, acceleration and deceleration to be optimal for the load and avoid inverter trip (fault) events.
- Sometimes the slower version of the machine does not have special braking options, but a higher performance version does have braking features.

Having multiple motor profiles lets you store several "personalities" for motors in one inverter's memory. The inverter allows the final selection between the three motor types to be made in the field through the use of intelligent input terminal functions [SET] and [SET3]. This provides an extra level of flexibility needed in particular situations. See the following page.

Parameters for the second motor and third motors have function codes of the form x2xx and x3xx respectively. They appear immediately after the first motor's parameter in the menu listing order. The following table lists the parameters that have the second/third parameter registers for programming.

Function Name	Parameter Codes		
	1st motor	2nd motor	3rd motor
Multi-speed frequency setting	A020	A220	A320
Acceleration time setting (Acceleration 1)	F002	F202	F302
Deceleration time setting (Deceleration 1)	F003	F203	F303
Second acceleration time setting (Acceleration 2)	A092	A292	A392
Second deceleration time setting (Deceleration 2)	A093	A293	A393
Select method to use 2nd acceleration/deceleration	A094	A294	—
Acc1 to Acc2 frequency transition point	A095	A295	—
Dec1 to Dec2 frequency transition point	A096	A296	—
Level of electronic thermal setting	B012	B212	B312
Select electronic thermal characteristic	B013	B213	B313
Torque boost method selection	A041	A241	—
Manual torque boost value	A042	A242	—
Manual torque boost frequency adjustment	A043	A243	A343
V/F characteristic curve selection	A044	A244	A344
Base frequency setting	A003	A203	A303
Maximum frequency setting	A004	A204	A304
Select motor constant	H002	H202	—
Motor capacity setting	H003	H203	—
Motor poles setting	H004	H204	—
Motor constant R1 setting (Standard, Auto tuning)	H020/H030	H220/H230	—
Motor constant R2 setting (Standard, Auto tuning)	H021/H031	H221/H231	—
Motor constant L setting (Standard, Auto tuning)	H022/H032	H222/H232	—
Motor constant Io setting (Standard, Auto tuning)	H023/H033	H223/H233	—
Motor constant J setting (Standard, Auto tuning)	H024/H034	H224/H234	—
Motor constant Kp setting (Standard, Auto tuning)	H005	H205	—
Motor stabilization constant	H006	H206	—

Inverter System Accessories

5

In This Chapter.... page

— Introduction 2
— Component Descriptions 3
— Dynamic Braking 6

Introduction

A motor speed control system will obviously include a motor and inverter, as well as fuses for safety. If you are connecting a motor to the inverter on a test bench just to get started, that's all you may need for now. But a fully developed system can also have a variety of additional components. Some can be for noise suppression, while others may enhance the inverter's braking performance. The figure below shows a system with several possible optional components, and the table gives part number information.

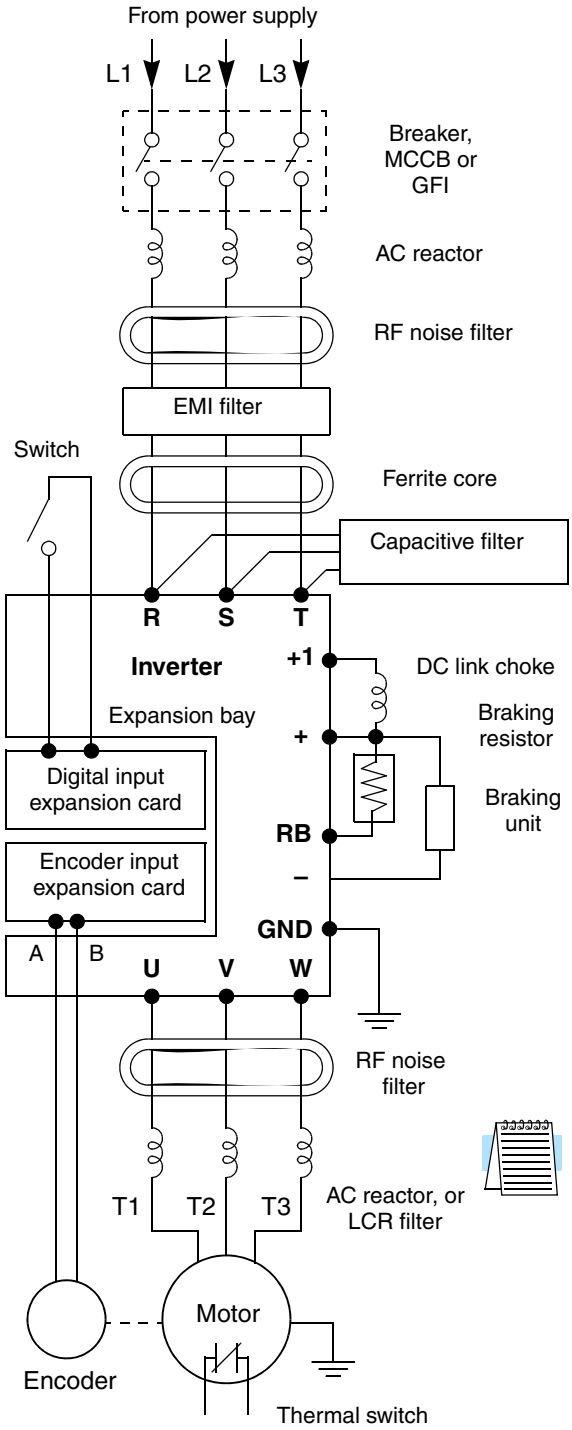

Name	Part No. Series		See page
	Europe, Japan	USA	
AC reactor, input side	ALI–xxx	HRL–x	5–3
RF noise filter, input side	ZCL–x	ZCL–x	5–4
EMI filter (EMC Class A)	NF–CEHx	NF–CEHxx	5–4
EMI filter (EMC Class B)	NF–CEHx, with FC–Hx	NF–CEHxx, with FC–Hx	5–4
Capacitive filter	CFI–x	CFI–x	5–4
DC link choke	—	HDC–xxx	5–4
Braking resistor	JRB–xxx–x, SRB–xxx–x	JRB–xxx, SRB–xxx	5–9
Braking resistor, NEMA-rated	—	HRB1-x, HRB2-x HRB3-x	5–9
Resistance braking unit	BRD–xxx	BRD–xxx	5–8
RF noise filter, output side	ZCL–xxx	ZCL–xxx	5–4
AC reactor, output side	ALI–xxx	HRL–xxx	5–3
LCR filter	—	HRL–xxxC	5–3
Encoder feed-back expansion	SJ-FB		5–5
Digital input expansion card	SJ-DG		5–5

NOTE: The Hitachi part number series for accessories includes different sizes of each part type, specified by the –x suffix. Hitachi product literature can help match size and rating of your inverter to the proper accessory size.

Each inverter accessory comes with its own printed instruction manual. Please refer to those manuals for complete installation details. This chapter gives only an overview of these optional system devices. For more information on Hitachi inverter system accessories, please contact your Hitachi sales office or distributor.

Component Descriptions

AC Reactors, Input Side

This is useful in suppressing harmonics induced on the power supply lines, or when the main power voltage imbalance exceeds 3% (and power source capacity is more than 500 kVA), or to smooth out line fluctuations. It also improves the power factor.

In the following cases for a general-purpose inverter, a large peak current flows on the main power supply side, and is able to destroy the inverter module:

- If the unbalanced factor of the power supply is 3% or higher
- If the power supply capacity is at least 10 times greater than the inverter capacity (the power supply capacity is 500 kVA or more)
- If abrupt power supply changes are expected

Examples of these situations include:

1. Several inverters are connected in parallel, sharing the same power bus
2. A thyristor converter and an inverter are connected in parallel, sharing the same power bus
3. An installed phase-advance (power factor correction) capacitor opens and closes

Where these conditions exist or when the connected equipment must be highly reliable, install an AC reactor between the power supply and the inverter. Also, where the effects of an indirect lightning strike is possible, install a lightning conductor.

Example calculation:

V_{RS} = 205V, V_{ST} = 203V, V_{TR} = 197V,
where V_{RS} is R-S line voltage, V_{ST} is S-T line voltage, V_{TR} is T-R line voltage

$$\text{Unbalance factor of voltage} = \frac{\text{Max. line voltage (min.)} - \text{Mean line voltage}}{\text{Meanline voltage}} \times 100$$

$$= \frac{V_{RS} - (V_{RS} + V_{ST} + V_{TR})/3}{(V_{RS} + V_{ST} + V_{TR})/3} \times 100 = \frac{205 - 202}{202} \times 100 = 1.5\%$$

Please refer to the documentation that comes with the AC reactor for installation instructions.

AC Reactor or LCR Filter, Output Side

This reactor reduces the vibrations in the motor caused by the inverter's switching waveforms, by smoothing the waveforms to approximate commercial power quality. It is also useful to reduce the reflected voltage wave phenomenon when wiring from the inverter to the motor is more than 10m in length. Please refer to the documentation that comes with the AC reactor for installation instructions.

Zero-phase Reactor (RF Noise Filter)

Electrical noise interference may occur on nearby equipment such as a radio receiver. The zero-phase reactor helps reduce radiated noise from the inverter wiring. It can be used on the input or output side of the inverter. The example zero-phase reactor shown to the right comes with a mounting bracket. The wiring must go through the opening to reduce the RF component of the electrical noise. Loop the wires three times (four turns) to attain the full RF filtering effect. For larger wire sizes, place multiple zero-phase reactors (up to four) side-by-side for a greater filtering effect.



ZCL–x

EMI Filter

The EMI filter reduces the conducted noise on the power supply wiring generated by the inverter. Connect the EMI filter to the inverter primary (input side). The NF–CEH–x series filter is required for compliance to the EMC Class A directive (Europe) and C-TICK (Australia). See "CE–EMC Installation Guidelines" on page D–2.

WARNING: The EMI filter has high internal leakage current from power wiring to the chassis. Therefore, connect the chassis ground of the EMI filter before making the power connections to avoid danger of shock or injury.



NF–CEHxx

Ferrite Core

To meet EMC Class B limit an optional ferrite core (FC–Hx) must be inserted between the NF–CEHx filter (above) and the inverter.

RF Noise Filter (Capacitive)

This capacitive filter reduces radiated noise from the main power wires in the inverter input side. This filter is not for achieving CE compliance and is applicable only to the input side only of the inverter. It comes in two versions—for 200V class inverters or 400V class inverters. Please refer to the documentation that comes with the radio noise filter for installation instructions.

DC Link Choke

The DC choke (reactor) suppresses harmonics generated by the inverter. It attenuates the high-frequency components on the inverter's internal DC bus (link). However, note that it does not protect the diode rectifiers in the inverter input circuit.

Expansion Cards

The SJ–FB Encoder Feedback Board installs in the inverter's expansion bay, which can accept up to two expansion cards. The encoder card accepts two-channel incremental encoder signals. Position feedback is essential for certain torque-control algorithms, and is useful for improving low-speed performance. The card can also generate linear acceleration/deceleration ramps for velocity control.

All wiring associated with this card connects to its PWB connectors as shown. Some related signals may be assigned to the intelligent I/O terminals, as described in Chapter 4. For more information, refer to the SJ–FB manual.

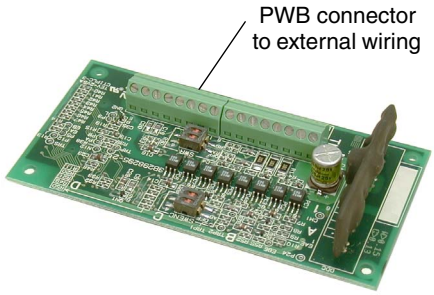

SJ–FB Encoder Feedback Card

The SJ–DG Digital Input Card installs in the inverter's expansion bay. This card accepts up to eight digital input signals, in addition to the intelligent inputs on the inverter's control terminal connector. All wiring associated with card connects to its PWB connectors as shown.

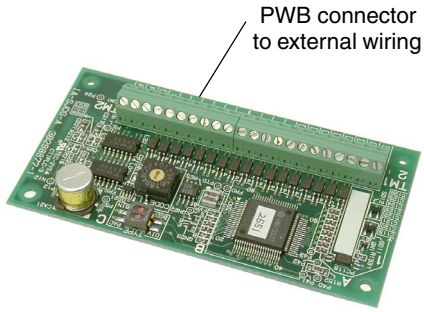

SJ–DG Digital Input Card

The SJ–DN DeviceNet Interface Card (not shown) installs in the inverter's expansion bay. It connects directly to a DeviceNet network. Inverter parameters P044 to P049 configure the card. Only one DeviceNet card may be installed in an inverter. For more information, please refer to the DeviceNet Expansion Card Instruction Manual.

Dynamic Braking

Introduction

The purpose of dynamic braking is to improve the ability of the inverter to stop (decelerate) the motor and load. This becomes necessary when an application has some or all of the following characteristics:

- High load inertia compared to the available motor torque
- The application requires frequent or sudden changes in speed
- System losses are not great enough to slow the motor as needed

When the inverter reduces its output frequency to decelerate the load, the motor can temporarily become a generator. This occurs when the motor rotation frequency is higher than the inverter output frequency. This condition can cause the inverter DC bus voltage to rise, resulting in an over-voltage trip. In many applications, the over-voltage condition serves as a warning signal that we have exceeded the deceleration capabilities of the system. SJ300 inverters rated 15hp (11kW) and below have a built-in braking unit that sends the regenerative energy from the motor during deceleration to the optional braking resistor(s). External braking units may also be used if higher braking torques and/or duty cycles are required. The dynamic braking resistor serves as a load, developing heat to stop the motor just as brakes on an automobile develop heat during braking.

The braking resistor is the main component of a braking resistor assembly, which includes an integral thermal fuse and thermally activated alarm relay for safety. However, be careful to avoid overheating its resistor. The thermal fuse and thermal relay are safeguards for extreme conditions, but the inverter can maintain braking usage in a safe zone.



Braking Resistor

Dynamic Braking Usage Ratio

The inverter controls braking via a duty cycle method (percent of the time braking is ON versus total time). Parameter B090 sets the dynamic braking usage ratio. In the graph to the right, the example shows three uses of dynamic braking in a 100-second period. The inverter calculates the average percentage usage in that time (duty cycle %). The percentage of usage is proportional to the heat dissipated. If the duty cycle is greater than the B090 parameter setting, the inverter enters the Trip Mode and turns OFF the frequency output.

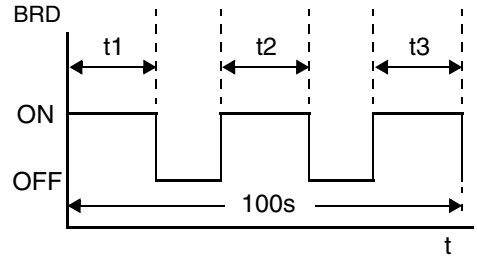

$$\boxed{B90}\ \text{Duty cycle} = \frac{(t1 + t2 + t3 + \ldots)}{100\ \text{seconds}} \times 100$$

Please note the following (for SJ300–004LF/HF to SJ300–110LF/HF).

- When B090 is set for 0%, dynamic braking is not performed.
- When the duty cycle value exceeds the limit set by B090, the inverter will trip (ending the dynamic braking).
- The cable from the external resistor to the inverter must not exceed 5 m (16 ft.) length.
- The wires from the DB resistor to the inverter must not be bundled together with control or signal wires.

NOTE: Inverters rated 20hp (15kW) and above (SJ300–150LF/HF to SJ300–550LF/1320HFE/1500HFU) do not include an internal braking unit. Parameters B090, B095, and B096 do not apply to these models.

SJ300 Dynamic Braking Selection Tables

The SJ300 Series 200V and 400V class inverter models in the 1/2 to 15 hp range have internal braking units. Additional stopping torque is available by adding external resistors. The required braking torque depends on your particular application. Other tables in this section will help you choose the proper resistor.

1/2 to 15 hp (0.4 to 11 kW)			Without External Resistor		Using Optional External Resistor		Performance @ Minimum Resistance		Minimum Resistance @ 100% Braking Duty Cycle, Ohms
Voltage Class	Model Number	Motor hp	Braking Unit	Braking Torque @ 60Hz, %	External Resistance, Ohms	Braking Torque @60Hz, %	Minimum Resistance, Ohms	Max. Braking Duty Cycle, %	
200V	SJ300–004LFU	1/2	Built-in	50	50	200	50	10	150
	SJ300–007LFU	1	Built-in	50	50	200	50	10	150
	SJ300–015LFU	2	Built-in	50	35	200	35	10	100
	SJ300–022LFU	3	Built-in	20	35	160	35	10	100
	SJ300–037LFU	5	Built-in	20	35	100	35	10	100
	SJ300–055LFU	7.5	Built-in	20	17	80	17	10	50
	SJ300–075LFU	10	Built-in	20	17	80	17	10	50
	SJ300–110LFU	15	Built-in	10	17	70	17	10	50
400V	SJ300–007HFU/E	1	Built-in	50	100	200	100	10	300
	SJ300–015HFU/E	2	Built-in	50	100	200	100	10	300
	SJ300–022HFU/E	3	Built-in	20	100	200	100	10	300
	SJ300–040HFU/E	5	Built-in	20	100	140	70	10	200
	SJ300–055HFU/E	7.5	Built-in	20	70	100	70	10	200
	SJ300–075HFU/E	10	Built-in	20	70	100	50	10	150
	SJ300–110HFU/E	15	Built-in	10	70	70	50	10	150

Choosing a Braking Unit

The SJ300 Series 200V and 400V class inverter models in the 20 to 200 hp range require external braking units to increase their braking torque. Braking units come in sizes corresponding to the power handing requirements for particular resistor selections. Be sure to follow the installation instructions accompanying each braking unit. The following table lists the SJ300 inverter models and their applicable braking units.

20 to 200 hp (15 to 1500 kW)			Performance Versus External Braking Units				
			Without Braking Unit	With Braking Unit			
Voltage Class	Model Number SJ300	Motor hp	Braking Torque, %	Braking Unit Model	Minimum Resistance, Ohms	Max. Braking Duty Cycle, %	Minimum Resistance @ 100% Braking Duty Cycle, Ohms
200V	–150LFU	20	10	BRD–E2–N	17	10	46
			10	BRD–E2–30K	4	20	6
	–185LFU	25	10	BRD–E2–N	17	10	46
			10	BRD–E2–30K	4	20	6
	–220LFU	30	10	BRD–E2–N	17	10	46
			10	BRD–E2–30K	4	20	6
	–300LFU	40	10	BRD–E2–30K	2	20	6
			10	BRD–E2–55K	2	20	4
	–370LFU	50	10	BRD–E2–55K	2	20	4
	–450LFU	60	10	BRD–E2–55K	2	20	4
	–550LFU	75	10	BRD–E2–55K	2	20	4
400V	–150HFU/HFE	20	10	BRD–EZ2–N	34	10	100
			10	BRD–EZ2–30K	10	10	24
	–185HFU/HFE	25	10	BRD–EZ2–N	34	10	100
			10	BRD–EZ2–30K	10	10	24
	–220HFU/HFE	30	10	BRD–EZ2–N	34	10	100
			10	BRD–EZ2–30K	10	10	24
	–300HFU/HFE	40	10	BRD–EZ2–55K	6	20	12
	–370HFU/HFE	50	10	BRD–EZ2–55K	6	20	12
	–450HFU/HFE	60	10	BRD–EZ2–55K	6	20	12
	–550HFU/HFE	75	10	BRD–EZ2–55K	6	20	12
	–750HFU/HFE	100	10	BRD–EZ2–55K	6	20	12
	–900HFU/HFE	125	10	BRD–EZ2–55K	6	20	12
	–1100HFU/HFE	150	10	BRD–EZ2–55K	6	20	12
	–1320HFE	175	10	BRD–EZ2–55K	6	20	12
	–1500HFU	200	10	BRD–EZ2–55K	6	20	12

Selecting a Braking Resistor

You can add one or more resistors to your inverter configuration to increase braking torque performance. The number of resistors and their configuration (series or parallel) depends on the desired braking torque. The tables below list the resistor types for inverter models with internal braking units. Tables for inverters with external braking units are on the next two pages.

- Total Ohms – lists the resistance value of the resistor or, if using multiple resistors, their combined resistance
- Total Watts – lists the power dissipation of the resistor or, if using multiple resistors, their combined power dissipation
- Maximum Duty Cycle – the maximum allowable percentage of braking time over any 100-second interval to avoid overheating the resistor(s)
- Maximum braking torque – the maximum braking torque that the inverter / resistor combination can deliver



NOTE: If your application requires resistors with NEMA ratings, be sure to use the HRB type.

200V Class	Dynamic Braking Resistor Selection												
Model Number SJ300	JRB Series				SRB/NSRB Series				HRB Series				Max. Braking Torque, %
	Type & (qty)	Total Ohms	Total Watts	Max. Duty Cycle, %	Type & (qty)	Total Ohms	Total Watts	Max. Duty Cycle, %	Type & (qty)	Total Ohms	Total Watts	Max. Duty Cycle, %	
–004LFU	120–3	50	120	1.5	300–1	50	300	7.5	HRB1	50	400	10	200
–007LFU	120–3	50	120	1.5	300–1	50	300	7.5	HRB1	50	400	10	200
–015LFU	120–4	35	120	1.0	400–1	35	400	7.5	HRB2	35	600	10	200
–022LFU	120–4	35	120	1.0	400–1	35	400	7.5	HRB2	35	600	10	160
–037LFU	120–4	35	120	1.0	400–1	35	400	7.5	HRB2	35	600	10	100
–055LFU	120–4 x (2) in parallel	17.5	240	1.0	400–1 x (2) in parallel	17.5	800	7.5	HRB3	17	1200	10	80
–075LFU		17.5	240	1.0		17.5	800	7.5	HRB3	17	1200	10	80
–110LFU		17.5	240	1.0		17.5	800	7.5	HRB3	17	1200	10	70

400V Class	Dynamic Braking Resistor Selection												
Model Number SJ300	JRB Series				SRB/NSRB Series				HRB Series				Max. Braking Torque, %
	Type & (qty)	Total Ohms	Total Watts	Max. Duty Cycle, %	Type & (qty)	Total Ohms	Total Watts	Max. Duty Cycle, %	Type & (qty)	Total Ohms	Total Watts	Max. Duty Cycle, %	
–007HFU/HFE	120–2	100	120	1.5	200–2	100	200	7.5	HRB1 x (2) in series	100	800	10	200
–015HFU/HFE	120–2	100	120	1.5	200–2	100	200	7.5		100	800	10	200
–022HFU/HFE	120–2	100	120	1.5	200–2	100	200	7.5		100	800	10	200
–040HFU/HFE	120–4 x (2) in series	70	240	1.0	400–1 x (2) in series	70	800	10	HRB2 x (2) in series	70	1200	10	140
–055HFU/HFE		70	240	1.0		70	800	10		70	1200	10	120
–075HFU/HFE		70	240	1.0		70	800	10		70	1200	10	100
–110HFU/HFE		70	240	1.0		70	800	10		70	1200	10	70

The table below lists the performance of 200V-class inverter models with the optional **external** braking units. In some cases, the resistor selection specifies multiple resistors in a parallel, series, or combination parallel/series configuration. The example diagram shows a parallel configuration. Please refer to the braking resistor documentation for detailed wiring diagrams.

Example configuration

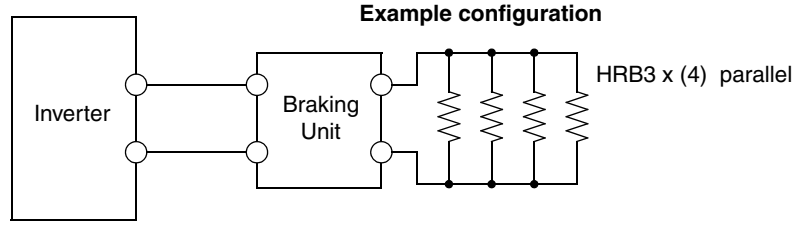

200V Class	Braking Unit	Dynamic Braking Resistor Selection					Max. Braking Torque, %
Model Number SJ300	Type	Type x (quantity)	Series or Parallel	Total Ohms	Total Watts	Max. Duty Cycle, %	
–150LFU	BRD–E2	HRB1	—	50	400	10	30
		HRB2	—	35	600	10	35
		HRB3	—	17	1200	10	60
	BRD–E2–30K	HRB3 x (2)	parallel	8.5	2400	20	110
		HRB3 x (3)	parallel	5.7	3600	20	150
		HRB3 x (4)	parallel	4.3	4800	20	200
–185LFU	BRD–E2	HRB1	—	50	400	10	25
		HRB2	—	35	600	10	30
		HRB3	—	17	1200	10	50
	BRD–E2–30K	HRB3 x (2)	parallel	8.5	2400	20	90
		HRB3 x (3)	parallel	5.7	3600	20	130
		HRB3 x (4)	parallel	4.3	4800	20	170
–220LFU	BRD–E2	HRB1	—	50	400	10	25
		HRB2	—	35	600	10	30
		HRB3	—	17	1200	10	45
	BRD–E2–30K	HRB3 x (2)	parallel	8.5	2400	20	80
		HRB3 x (3)	parallel	5.7	3600	20	110
		HRB3 x (4)	parallel	4.3	4800	20	150
–300LFU	BRD–E2–30K	HRB3 x (2)	parallel	8.5	2400	20	55
		HRB3 x (3)	parallel	5.7	3600	20	80
		HRB3 x (4)	parallel	4.3	4800	20	110
–370LFU	BRD–E2–30K	HRB3 x (2)	parallel	8.5	2400	20	45
		HRB3 x (3)	parallel	5.7	3600	20	65
		HRB3 x (4)	parallel	4.3	4800	20	90
–450LFU	BRD–E2–30K	HRB3 x (2)	parallel	8.5	2400	20	35
		HRB3 x (3)	parallel	5.7	3600	20	50
		HRB3 x (4)	parallel	4.3	4800	20	75

200V Class	Braking Unit	Dynamic Braking Resistor Selection					Max. Braking Torque, %
Model Number SJ300	Type	Type x (quantity)	Series or Parallel	Total Ohms	Total Watts	Max. Duty Cycle, %	
–550LFU	BRD–E2–30K	HRB3 x (2)	parallel	8.5	2400	20	30
		HRB3 x (3)	parallel	5.7	3600	20	40
		HRB3 x (4)	parallel	4.3	4800	20	60

The table below lists the performance of 400V-class inverter models with the optional **external** braking units. In some cases, the resistor selection specifies multiple resistors in a parallel, series, or combination parallel/series configuration. The example diagram shows a combination parallel / series configuration. Please refer to the braking unit manual for detailed wiring diagrams.

Example configuration

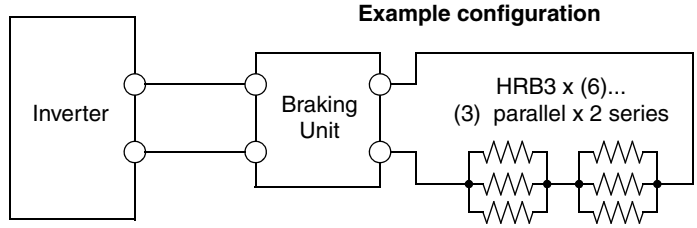

400V Class	Braking Unit	Dynamic Braking Resistor Selection					Max. Braking Torque, %
Model Number SJ300	Type	Type x (quantity)	Series / Parallel	Total Ohms	Total Watts	Max. Duty Cycle, %	
–150HFU/HFE	BRD–EZ2	HRB1 x (2)	series	100	800	10	40
		HRB2 x (2)	series	70	1200	10	60
		HRB3 x (2)	series	34	2400	10	110
	BRD–EZ2–30K	HRB3 x (4)	(2) parallel x 2 series	17	4800	10	190
		HRB3 x (6)	(3) parallel x 2 series	11.3	7200	10	200
–185HFU/HFE	BRD–EZ2	HRB1 x (2)	series	100	800	10	40
		HRB2 x (2)	series	70	1200	10	50
		HRB3 x (2)	series	34	2400	10	90
	BRD–EZ2–30K	HRB3 x (4)	(2) parallel x 2 series	17	4800	10	170
		HRB3 x (6)	(3) parallel x 2 series	11.3	7200	10	200
–220HFU/HFE	BRD–EZ2	HRB1 x (2)	series	100	800	10	35
		HRB2 x (2)	series	70	1200	10	45
		HRB3 x (2)	series	34	2400	10	80
	BRD–EZ2–30K	HRB3 x (4)	(2) parallel x 2 series	17	4800	10	150
		HRB3 x (6)	(3) parallel x 2 series	11.3	7200	10	200

400V Class	Braking Unit	Dynamic Braking Resistor Selection					Max. Braking Torque, %
Model Number SJ300	Type	Type x (quantity)	Series / Parallel	Total Ohms	Total Watts	Max. Duty Cycle, %	
–300HFU	BRD–EZ2–30K	HRB3 x (4)	(2) parallel x 2 series	17	4800	10	110
		HRB3 x (6)	(3) parallel x 2 series	11.3	7200	10	170
–370HFU/HFE	BRD–EZ2–30K	HRB3 x (4)	(2) parallel x 2 series	17	4800	10	90
		HRB3 x (6)	(3) parallel x 2 series	11.3	7200	10	150
–450HFU/HFE	BRD–EZ2–55K	HRB3 x (4)	(2) parallel x 2 series	17	4800	10	70
		HRB3 x (6)	(3) parallel x 2 series	11.3	7200	10	120
–550HFU/HFE	BRD–EZ2–55K	HRB3 x (4)	(2) parallel x 2 series	17	4800	10	60
		HRB3 x (6)	(3) parallel x 2 series	11.3	7200	10	100
–750HFU/HFE	BRD–EZ2–55K	HRB3 x (4)	(2) parallel x 2 series	17	4800	10	45
		HRB3 x (6)	(3) parallel x 2 series	11.3	7200	10	70
–900HFU/HFE	BRD–EZ2–55K	HRB3 x (4)	(2) parallel x 2 series	17	4800	10	40
		HRB3 x (6)	(3) parallel x 2 series	11.3	7200	10	60
–1100HFU/HFE	BRD–EZ2–55K	HRB3 x (4)	(2) parallel x 2 series	17	4800	10	30
		HRB3 x (6)	(3) parallel x 2 series	11.3	7200	10	50
–1320HFU	BRD–EZ2–55K	HRB3 x (4)	(2) parallel x 2 series	17	4800	10	25
		HRB3 x (6)	(3) parallel x 2 series	11.3	7200	10	40
–1500HFE	BRD–EZ2–55K	HRB3 x (4)	(2) parallel x 2 series	17	4800	10	20
		HRB3 x (6)	(3) parallel x 2 series	11.3	7200	10	35



NOTE: Other braking units and resistors are also available. For braking requirements beyond those in the tables, contact your Hitachi distributor.

Troubleshooting and Maintenance

6

In This Chapter.... page

— Troubleshooting 2
— Monitoring Trip Events, History, & Conditions 5
— Restoring Factory Default Settings 9
— Maintenance and Inspection 10
— Warranty 18

Call 1(800)985-6929 for Sales hitachiacdrive.com sales@hitachiacdrive.com

Troubleshooting

Safety Messages

Please read the following safety messages before troubleshooting or performing maintenance on the inverter and motor system.



WARNING: Wait at least five (5) minutes after turning OFF the input power supply before performing maintenance or an inspection. Otherwise, there is the danger of electric shock.



WARNING: Make sure that only qualified personnel will perform maintenance, inspection, and part replacement. Before starting to work, remove any metallic objects from your person (wristwatch, bracelet, etc.). Be sure to use tools with insulated handles. Otherwise, there is a danger of electric shock and/or injury to personnel.



WARNING: Never remove connectors by pulling on its wire leads (wires for cooling fan and logic P.C. board). Otherwise, there is danger of fire due to wire breakage and/or injury to personnel.

General Precautions and Notes

- Always keep the unit clean so that dust or other foreign matter does not enter the inverter.
- Take special care to avoid breaking wires or making connection mistakes.
- Firmly connect terminals and connectors.
- Keep electronic equipment away from moisture and oil. Dust, steel filings and other foreign matter can damage the inverter, causing unexpected accidents, so take special care.

Inspection Items

This chapter provides instructions or checklists for these inspection items:

- Daily inspection
- Periodic inspection (approximately once a year)
- Insulation resistance test

Call 1(800)985-6929 for Sales hitachiacdrive.com sales@hitachiacdrive.com

Troubleshooting Tips

The table below lists typical symptoms and the corresponding solution(s).

Symptom/condition		Probable Cause	Solution
The motor will not run.	The inverter outputs U, V, W are not supplying voltage.	• Is the frequency command source A001 parameter setting correct? • Is the Run command source A002 parameter setting correct?	• Make sure the parameter setting A001 is correct. • Make sure the parameter setting A002 is correct.
		• Is power being supplied to terminals [R], [S], and [T] ([L1], [L2], and [L3])? If so, the POWER lamp should be ON.	• Check terminals [R], [S], and [T] ([L1], [L2], and [L3]), then [U], [V], and [W] ([T1], [T2], and [T3]). • Turn ON the power supply or check fuses.
		• Is there an error code *EXX.X* displayed?	• Press the FUNC. key and determine the error type. Eliminate the error cause, then clear the error (Reset).
		• Are the signals to the intelligent input terminals correct? • Is the Run Command active? • Is the [FW] terminal (or [RV]) connected to P24 (via switch, etc.)	• Verify the terminal functions for C001 - C008 are correct. • Turn ON Run command enable. • Supply 24V to [FW] or [RV] terminal, if configured.
		• Has the frequency setting for F001 been set greater than zero? • Are the control circuit terminals [H], [O], and [L] connected to the potentiometer?	• Set the parameter for F001 to a safe, non-zero value. • If the potentiometer is the frequency setting source, verify voltage at [O] > 0V.
		• Is the RS (reset) function or FRS (free-run stop) function ON?	• Turn OFF the command(s).
	Inverter outputs U, V, W are supplying voltage.	• Is the motor load too heavy?	• Reduce load or test the motor independently of the load.
The direction of the motor is reversed.		• Are the connections of output terminals [U/T1], [V/T2], and [W/T3] correct? • Is the phase sequence of the motor forward or reverse with respect to [U/T1],[V/T2], and [W/T3]?	• Make connections according to the phase sequence of the motor. In general: FWD = U-V-W, and REV=U-W-V.
		• Are the control terminals [FW] and [RV] wired correctly? • Is parameter F004 properly set?	• Use terminal [FW] for forward, and [RV] for reverse. • Set motor direction in F004.

Symptom/condition		Probable Cause	Solution
The motor speed will not reach the target frequency (desired speed).		• If using the analog input, is there current or voltage at [O] or [OI]?	• Check the wiring. • Check the potentiometer or signal generating device.
		• Is the load too heavy?	• Reduce the load. • Heavy loads activate the overload restriction feature (reduces output as needed).
		• Is the inverter internally limiting the output frequency?	• Check max frequency setting (A004) • Check frequency upper limit setting (A061) • If using analog inputs, check their settings (A101– A104) or (A111–A114), or (A011–A014)
The rotation is unstable.		• Is the load fluctuation too great? • Is the supply voltage unstable? • Is the problem occurring at a particular frequency?	• Increase the motor capacity (both inverter and motor). • Fix power supply problem. • Change the output frequency slightly, or use the jump frequency setting to skip the problem frequency.
The RPM of the motor does not match the inverter output frequency setting.		• Is the maximum frequency setting A004 correct? • Does the monitor function D001 display the expected output frequency?	• Verify the V/F settings match motor specifications. • Make sure all scaling (such as A011 to A014) is properly set.
A parameter will not change after an edit (reverts to old setting).	True for certain parameters	• Is the inverter in Run Mode? Some parameters cannot be edited during Run Mode.	• Put inverter in Stop Mode (press the Stop/reset key). Then edit the parameter.
	True for all parameters	• If you're using the [SFT] intelligent input (software lock function)—is the [SFT] input ON?	• Change the state of the SFT input, and check the B031 parameter (SFT mode).

Monitoring Trip Events, History, & Conditions

Fault Detection and Clearing

The microprocessor in the inverter detects a variety of fault conditions and captures the event, recording it in a history table. The inverter output turns OFF, or "trips" similar to the way a circuit breaker trips due to an over-current condition. Most faults occur when the motor is running (refer to the diagram to the right). However, the inverter could have an internal fault and trip in Stop Mode. In either case, you can clear the fault by pressing the Stop/Reset key. Additionally, you can clear the inverter's cumulative trip history by performing the procedure "Restoring Factory Default Settings" on page 6–9 (setting B_84=00 will clear the trip history but leave inverter settings intact).

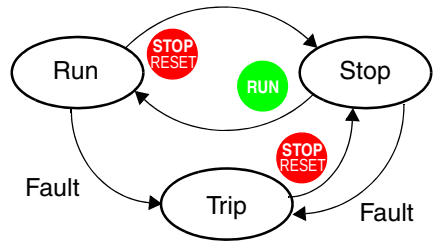

Error Status Codes

The conditions at the time of an error provide important clues to help you understand the cause. The SJ300 inverter displays a "status at trip point" digit to the right of the decimal point for some error codes. For example, E07.2 means Error 7 occurred and the inverter status was condition # "2" when the error occurred.

Status Codes	Inverter Status	Status Codes	Inverter Status
---.0	Reset	---.5	Run Command active with 0 Hz speed reference
---.1	Stop	---.6	Starting
---.2	Deceleration	---.7	DC braking
---.3	Constant speed	---.8	Overload restriction
---.4	Acceleration		

Error Codes

An error code will appear on the display automatically when a fault causes the inverter to trip. The following table lists the cause associated with the error.

Error Code	Name	Probable Cause(s)
E01	Over current event while at constant speed	The inverter output was short-circuited, or the motor shaft is locked or has a heavy load. These conditions cause excessive current for the inverter, so the inverter output is turned OFF. The dual-voltage motor is wired incorrectly. Note: The SJ300 will over current trip at nominally 200% of rated current for models up to –550xxx; nominally 180% of rated current for models –750xxx to –1500xxx.
E02	Over current event during deceleration	
E03	Over current event during acceleration	
E04	Over current event during other conditions	DC braking power(A054) is set too high, or a current transformer error occurred, or a noise source induced the error.

Error Code	Name	Probable Cause(s)
E05	Overload protection	When a motor overload is detected by the electronic thermal function, the inverter trips and turns OFF its output.
E06	Braking resistor overload	When the regenerative braking resistor exceeds the usage time allowance or usage ratio, the inverter trips and turns OFF its output to the motor.
E07	Over voltage protection	When the DC bus voltage exceeds a threshold, due to regenerative energy from the motor.
E08	EEPROM error	When the built-in EEPROM memory has problems due to noise or excessive temperature, the inverter trips and turns OFF its output to the motor.
E09	Under-voltage error	A decrease of internal DC bus voltage below a threshold results in a control circuit fault. This condition can also generate excessive motor heat or cause low torque. The inverter trips and turns OFF its output.
E10	CT (current transformer) error	If a strong source of electrical interference is close to the inverter or a fault occurs in a built-in CT (current transformer), the inverter trips and turns its output OFF.
E11	CPU error	A malfunction in the built-in CPU has occurred, so the inverter trips and turns OFF its output to the motor.
E12	External trip	A signal on an intelligent input terminal configured as EXT has occurred. The inverter trips and turns OFF the output to the motor.
E13	USP	When the Unattended Start Protection (USP) is enabled, an error occurred when power is applied while a Run signal is present. The inverter trips and does not go into Run Mode until the error is cleared.
E14	Ground fault	The inverter is protected by the detection of ground faults between the inverter output and the motor during powerup tests. This feature protects the inverter, and does not protect humans.
E15	Input over-voltage	When the input voltage is higher than the specified value, it is detected 60 seconds after powerup and the inverter trips and turns OFF its output.
E16	Instantaneous power failure	When the input power is removed for more than 15ms, the inverter trips and the output to the motor turns OFF. If the power failure duration exceeds the duration set in parameter B002, it is considered a power failure. When input power is restored, the inverter restarts if the Run signal is present, depending on the restart condition.
E21	Inverter thermal trip	When the inverter internal temperature is above the threshold, the thermal sensor in the inverter module detects the excessive temperature of the power devices and trips, turning the inverter output OFF.

Error Code	Name	Probable Cause(s)
E23	Gate array error	An internal inverter error has occurred in communications between the CPU and gate array IC.
E24	Phase failure detection	One of three lines of the 3-phase power is missing.
E30	IGBT error	When an instantaneous over-current condition occurs on any IGBT (output transistor) device, the inverter alarm trips. then it turns the outputs OFF in order to protect the circuitry.
E35	Thermistor	When a thermistor is connected to terminals [TH] and [CM1] and the inverter has sensed the temperature is too high, the inverter trips and turns OFF the output.
E36	Brake error	When the inverter releases the brake and cannot detect whether the external brake is ON or OFF within the waiting time (set by parameter B124), the inverter trips and turns OFF the output to the motor.
----	Under-voltage (brownout) with output shutoff	Due to low input voltage, the inverter turns its output OFF and tries to restart. If it fails to restart, then the alarm trips to record the under-voltage error event.
oooo	Automatic restart and phase loss	The inverter is restarting, due to an over-current, over-voltage, under-voltage, or a phase loss event. See parameter B001 setting in "Automatic Restart Mode and Phase Loss" on page 3–29.
E6X	Expansion card #1 connection error	An error has occurred in an expansion card or at its connecting terminals. Please refer to the manual for the expansion card for additional details.
E7X	Expansion card #2 connection error	



NOTE: If an EEPROM error (E08) occurs, be sure to confirm the parameter data values are still correct.

Trip History and Inverter Status

We recommend that you first find the cause of the fault before attempting clearing it. When a fault occurs, the inverter stores important performance data at the moment of the fault. To access the data, use the monitor functions (Dxxx) and select D081 for details about the present fault (E_n). The previous five faults are stored in D081 to D086, with D (E_{n-1} to E_{n-5}). Each error shifts D081–D085 to D082–D086, and writes the new error to D081.

The following Monitor Menu map shows how to access the error codes. When fault(s) exist, you can review their details by first selecting the proper function: D081 is most recent, and D086 is the oldest.

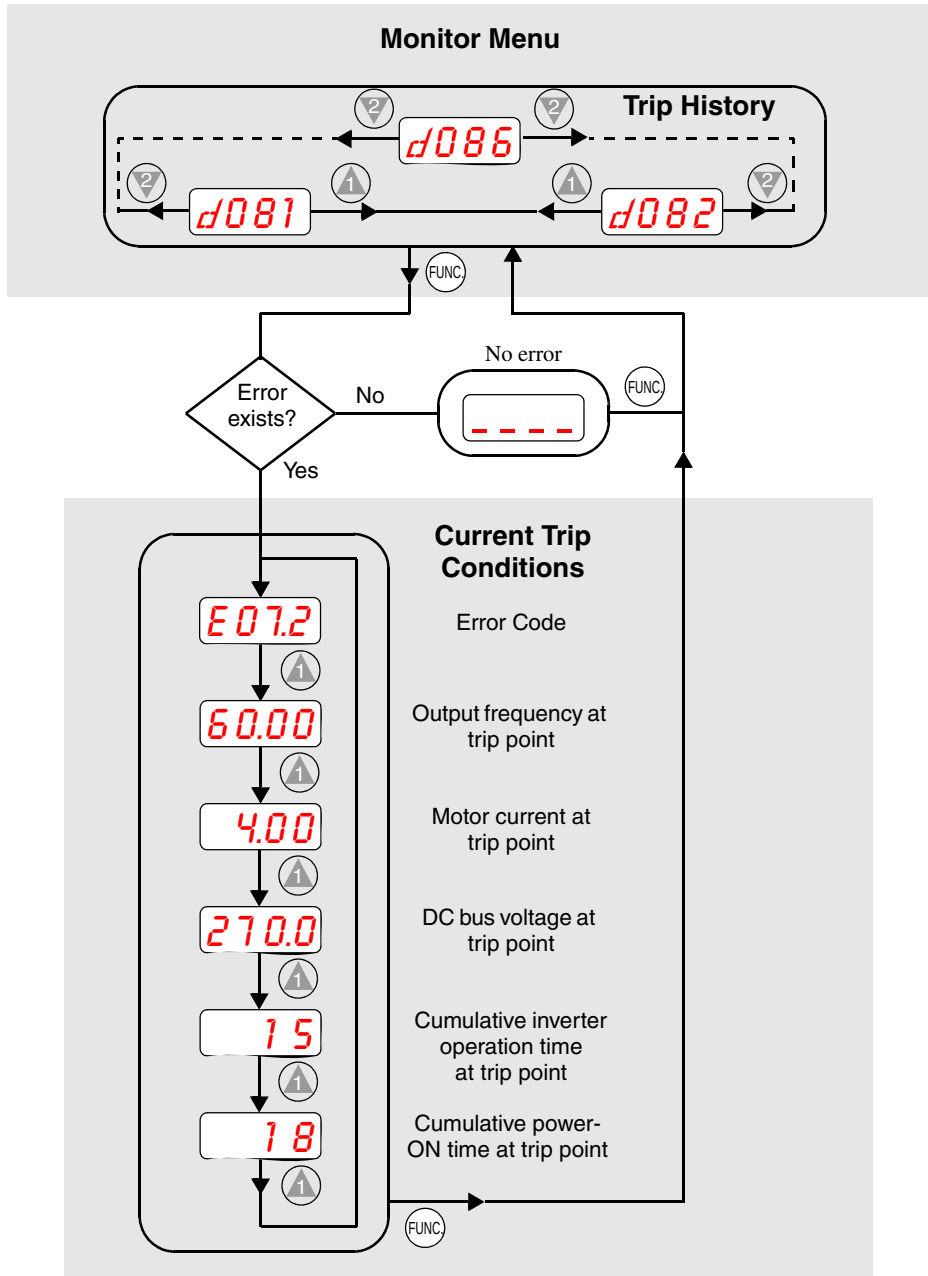

Restoring Factory Default Settings

You can restore all inverter parameters to the original factory (default) settings for the intended country of use. After initializing the inverter, use the powerup test in Chapter 2 to get the motor running again. To initialize the inverter, follow the steps below.

No.	Action	Display	Func./Parameter
1	Use the FUNC, 1, and 2 keys to navigate to the "B" Group.	b - - -	"B" Group selected
2	Press the FUNC. key.	b001	First "B" parameter selected
3	Press and hold the 1 key until ->	b085	Country code for initialization selected
4	Press the FUNC. key.	02	00 = Japan, 01 = Europe, 02 = U.S.
5	Confirm the country code is correct. Do not change it unless you are absolutely sure the power input voltage range and frequency match the country code setting. To change the country code, press 1 or 2 to set; STR to store.		
6	Press the FUNC. key.	b085	Country code for initialization selected
7	Press the 2 key.	b084	Initialization function selected
8	Press the FUNC. key.	00	00 = initialization disabled, clear trip history only
9	Press the 1 key.	01	01 = enable initialization
10	Press the STR key.	b084	Initialization now enabled to restore all defaults
11	Press and hold the 1 and 2 keys together, and immediately press and hold the FUNC. key. Do not release these keys yet.	b084	First part of special key sequence, the "B" in the display begins flashing
12	Holding the keys above, press and hold the STOP RESET (STOP) key for 3 sec.	b084	Entire "B084" display will begin flashing
13	When the b084 display begins flashing, release the STOP RESET key.	0 EU or 0USA	Default parameter country code shown during initialization process (left-most character displays alternating pattern)
14	Release the 1, 2, and FUNC. keys together.	d001	Final part of key sequence, function code for output frequency monitor shown after initialization is complete

Maintenance and Inspection

Monthly and Yearly Inspection Chart

Item Inspected		Check for...	Inspection Cycle		Inspection Method	Criteria
			Month	Year		
Overall	Ambient environment	Extreme temperatures & humidity	✔		Thermometer, hygrometer	Ambient temperature between -10 to 50°C, non-condensing
	Major devices	Abnormal vibration, noise	✔		Visual and aural	Stable environment for electronic controls
	Power supply voltage	Voltage tolerance	✔		Digital volt meter, measure between inverter terminals [L1], [L2], [L3]	200V class: 200 to 240V 50/60 Hz 400V class: 380 to 460V 50/60 Hz
Main circuit	Ground Insulation	Adequate resistance		✔	Megger test	500VDC, reading of 5M ohms or greater, see next section for test details
	Mounting	No loose screws		✔	Torque wrench	M3: 0.5 – 0.6 Nm M4: 0.98 – 1.3 Nm M5: 1.5 – 2.0 Nm
	Components	Overheating		✔	Thermal trip events	No trip events
	Housing	Dirt, dust		✔	Visual	Vacuum dust and dirt
	Terminal block	Secure connections		✔	Visual	No abnormalities
	Smoothing capacitor	Leaking, swelling	✔		Visual	No abnormalities
	Relay(s)	Chattering		✔	Aural	Single click when switching ON or OFF
	Resistors	Cracks or discoloring		✔	Visual	Use Ohm meter to check braking resistors
	Cooling fan	Noise	✔		Power down, manually rotate	Rotation must be smooth
		Dust	✔		Visual	Vacuum to clean
Control circuit	Overall	No odor, discoloring, corrosion		✔	Visual	No abnormalities
	Capacitor	No leaks or deformation	✔		Visual	Undistorted appearance
Display	LEDs	Legibility	✔		Visual	All LED segments work

Note 1: The life of a capacitor is affected by the ambient temperature. See "Capacitor Life Curve" on page 6–12.

Note 2: The inverter must be cleaned periodically. If dust accumulates on the fan and heat sink, it can cause overheating of the inverter.

Megger Test

The *megger* is a piece of test equipment that uses a high voltage to determine if an insulation degradation has occurred. For inverters, it is important that the power terminals be isolated from the Earth GND terminal via the proper amount of insulation.

The circuit diagram below shows the inverter wiring for performing the megger test. Just follow the steps to perform the test:

1. Remove power from the inverter and wait at least 5 minutes before proceeding.
2. Open the front housing panel to access the power wiring.
3. Remove all wires to terminals [R, S, T, PD, P, N, RB, U, V, and W]. Most importantly, the input power and motor wires will be disconnected from the inverter.
4. Remove the jumper at connector J61. It is located on the main circuit board beside the power terminals.
5. Use a bare wire and short terminals [R, S, T, PD, P, N, RB, U, V, and W] together as shown in the diagram.
6. Connect the megger to the inverter Earth GND and to the shorted power terminals as shown. Then perform the megger test at 500 VDC and verify 5MΩ or greater resistance.

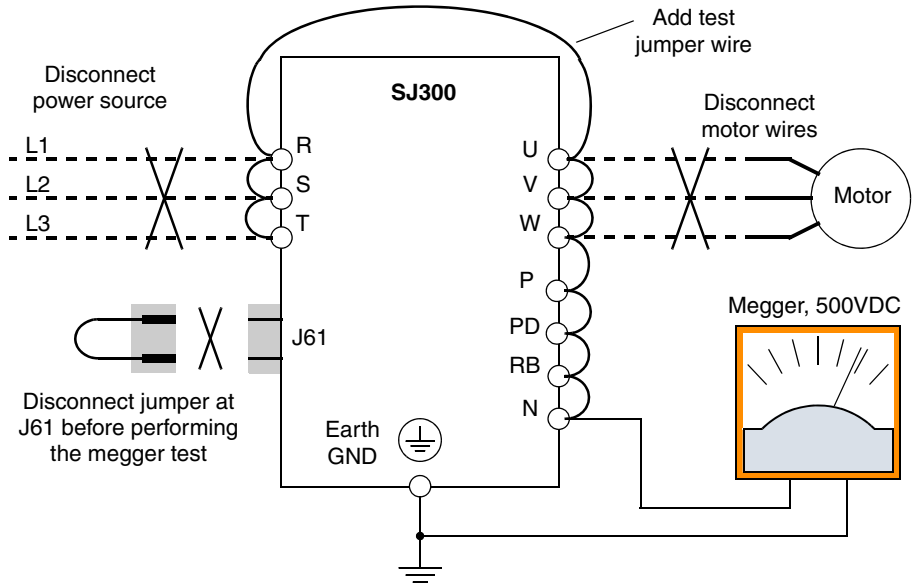

7. After completing the test, disconnect the megger from the inverter.
8. Reconnect the jumper at connector J61 as before.
9. Reconnect the original wires to terminals [R, S, T, PD, P, N, RB, U, V, and W].



CAUTION: Do not connect the megger to any control circuit terminals such as intelligent I/O, analog terminals, etc. Doing so could cause damage to the inverter.



CAUTION: Never test the withstand voltage (HIPOT) on the inverter. The inverter has a surge protector between the main circuit terminals above and the chassis ground.

Spare parts

We recommend that you stock spare parts to reduce down time, including parts listed below:

Part description	Symbol	Quantity		Notes
		Used	Spare	
Cooling fan	FAN	1, 2, 3... (depends on model)	1 or 2	Fan unit at top of housing in all models
Auxiliary cooling fan	FAN	0 or 1... (depends on model)	0 or 1	–150Lxx, –185Lxx, and –220Lxx models
Capacitor bank	CB	1	1	All models

Capacitor Life Curve

The DC bus inside the inverter uses a large capacitor as shown in the diagram below. The capacitor handles high voltage and current as it smooths the power for use by the inverter. So, any degradation of the capacitor will affect the performance of the inverter. The capacitor bank in SJ300 series inverters is replaceable. This section will show you how to replace it in the field.

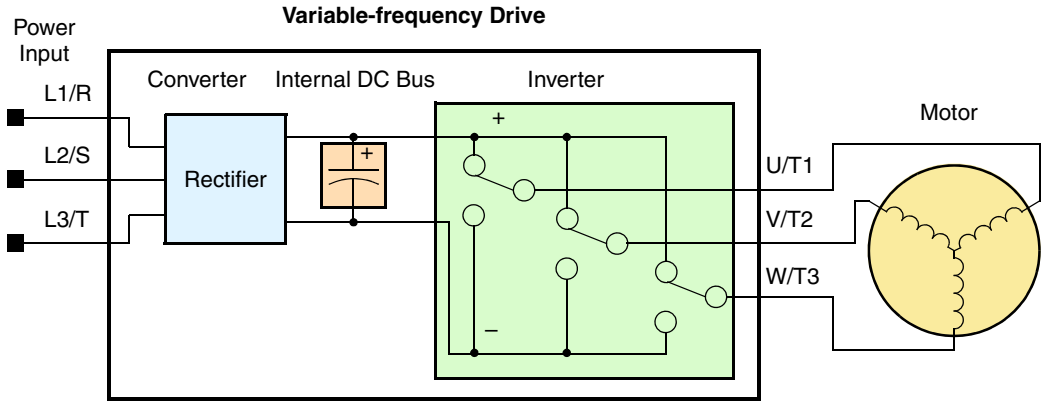

Capacitor life is reduced in higher ambient temperatures, as the graph below demonstrates. Be sure to keep the ambient temperature at acceptable levels, and perform maintenance inspections on the fan, heat sink, and other components. If the inverter is installed on a cabinet, the ambient temperature is the temperature inside the cabinet.

Capacitor Life Curve

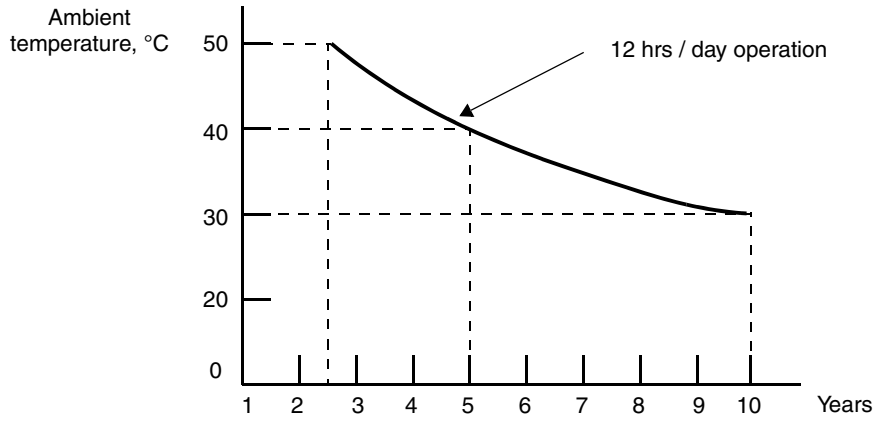

Capacitor Replacement

The capacitor bank consists of an assembly that slides out of the SJ300 unit. This means that no soldering is required!

1. First, make sure that all power is removed from the unit, and that you have waited 5 minutes before accessing the wiring area. Then you'll need to remove the metal wire entry plate located at the bottom of the unit. This may require you to disconnect all wires to the power terminals. Then, just loosen the screws as shown, and slide the wire entry plate outward on its guides to remove.

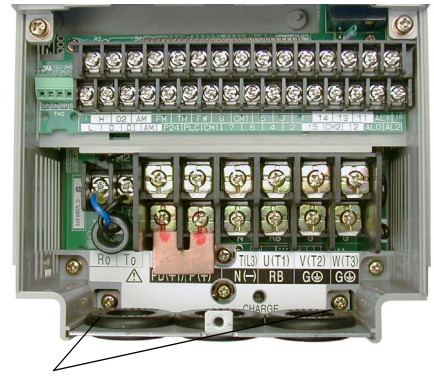

Retention screws for wire entry plate

WARNING: The screws that retain the capacitor bank assembly are part of the electrical circuit of the high-voltage internal DC bus. Be sure that all power has been disconnected from the inverter, and that you have waited at least 5 minutes before accessing the terminals or screws. Be sure the charge lamp is extinguished. Otherwise, there is the danger of electrocution to personnel.

2. The capacitor bank assembly is locked into the inverter via two screws that also make the electrical connection to the internal DC bus. These two screws are accessible just below the power terminals as shown to the right.

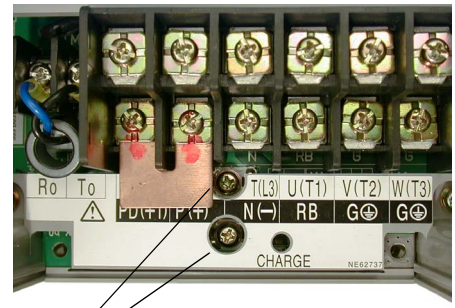

Retention screws for capacitor bank

3. Grasp the capacitor bank assembly and gently slide it out of the unit as shown to the right. DO NOT try to force the removal; it will slide out easily if all the screws in the steps above have been removed.

4. Then slide in the new unit and replace all the screws removed in steps 1) and 2).

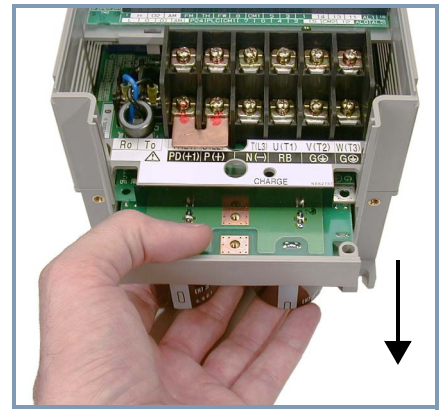
Pull capacitor bank assembly outward from SJ300 unit to remove

CAUTION: Do not operate the inverter unless you have replaced the two screws that connect the capacitor bank assembly to the internal DC bus. Otherwise, damage to the inverter may occur.

Fan Assembly Replacement

The SJ300 Series inverters have field-replaceable fan units. They include an internal connector for easy removal and replacement. You will need to remove the front panel covers to remove the fan assembly. First, be sure to remove power from the unit and wait at least 5 minutes before accessing the wiring area.

1. Remove the digital operator from the front panel. Then remove the bottom front panel to expose the wiring area as shown. This will also expose the retention screws for the top front panel. Remove these screws, which will allow the front panel to hinge upward and unfasten from the unit.

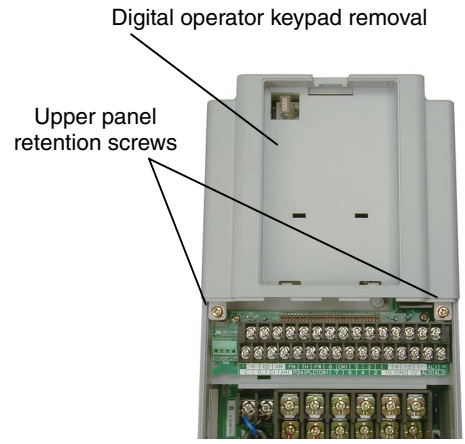

2. After removing all front panel pieces, locate the thumb latches in the top of the inverter housing. Grasp and push the releases inward as shown to the right, and gently pull upward to remove the fan assembly.

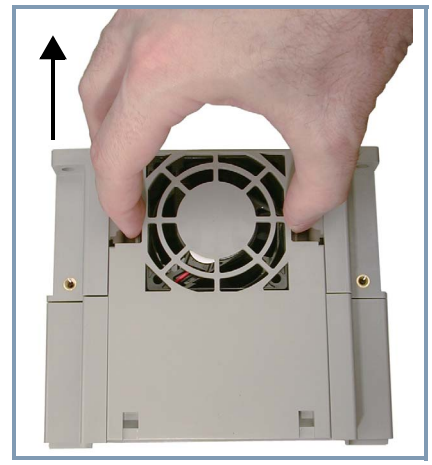

CAUTION: Remove the fan assembly carefully, since it is attached to the unit via connecting wires.

3. After unfastening the fan assembly, turn it over to expose the connecting wires. Then locate the PWB connector as shown. Disconnect the wiring.
4. Connect the new fan assembly wiring. The polarized plug will ensure a proper connection.
5. Snap the replacement fan into place.
6. Replace all front panel pieces and retention screws.

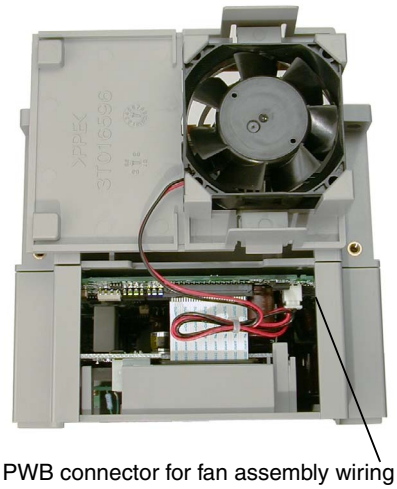

Troubleshooting and Maintenance

General Inverter Electrical Measurements

The following table specifies how to measure key system electrical parameters. The diagrams on the next page show inverter-motor systems and the location of measurement points for these parameters.

Parameter	Circuit location of measurement	Measuring instrument	Notes	Reference Value
Supply voltage E_1	E_R – across L1 and L2 E_S – across L2 and L3 E_T – across L3 and L1	Moving-coil type voltmeter or rectifier type voltmeter	Fundamental wave effective value	Commercial supply voltage (200V class) 200-240V, 50/60 Hz 400V class 380-460V, 50/60 Hz
Supply current I_1	I_r – L1, I_s – L2, I_t – L3	Moving-coil type ammeter	Total effective value	—
Supply power W_1	W_{11} – across L1 and L2 W_{12} – across L2 and L3	Electronic type wattmeter	Total effective value	—
Supply power factor Pf_1	$Pf_1 = \frac{W_1}{\sqrt{3} \times E_1 \times I_1} \times 100\%$			—
Output voltage E_0	E_U – across U and V E_V – across V and W E_W – across W and U	Rectifier type voltmeter	Total effective value	—
Output current I_o	I_U – U I_V – V I_W – W	Moving-coil type ammeter	Total effective value	—
Output power W_o	W_{01} – across U and V W_{02} – across V and W	Electronic type wattmeter	Total effective value	—
Output power factor Pf_o	Calculate the output power factor from the output voltage E, output current I, and output power W. $Pf_0 = \frac{W_0}{\sqrt{3} \times E_0 \times I_0} \times 100\%$			—

Note 1: Use a meter indicating a fundamental wave effective value for voltage, and meters indicating total effective values for current and power.

Note 2: The inverter output has a distorted waveform, and harmonic frequencies may cause erroneous readings. However, the measuring instruments and methods listed above provide reasonably accurate results.

Note 3: A general-purpose digital volt meter (DVM) is not usually suitable to measure a distorted waveform (not pure sinusoid).

The figure below shows measurement locations for voltage, current, and power measurements listed in the table on the previous page. The voltage to be measured is the fundamental wave effective voltage. The power to be measured is the total effective power.

Three-phase measurement diagram

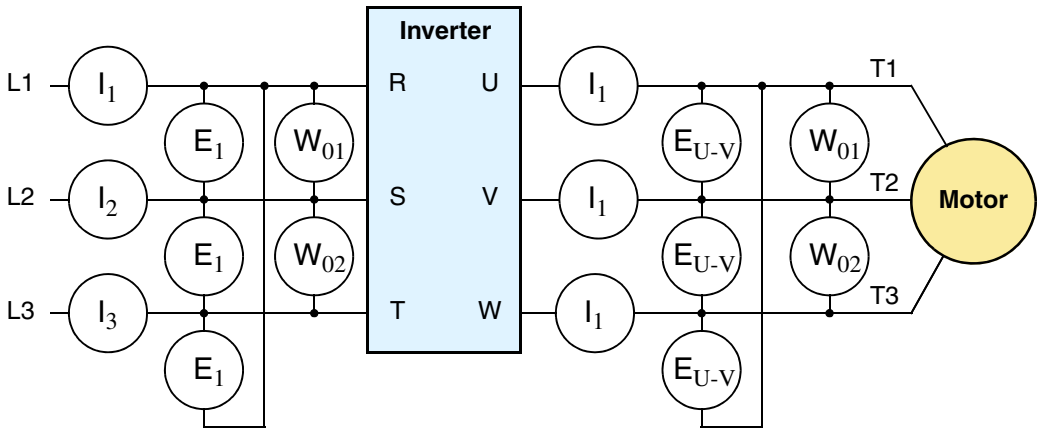

Inverter Output Voltage Measurement Techniques

Taking voltage measurements around drives equipment requires the right equipment and a safe approach. You are working with high voltages and high-frequency switching waveforms that are not pure sinusoids. Digital voltmeters will not usually produce reliable readings for these waveforms. And, it is usually risky to connect high voltage signals to oscilloscopes. The inverter output semiconductors have some leakage, and no-load measurements produce misleading results. So, we highly recommend using the following circuits to measure voltage for performing the equipment inspections.

Voltage measurement *with* load

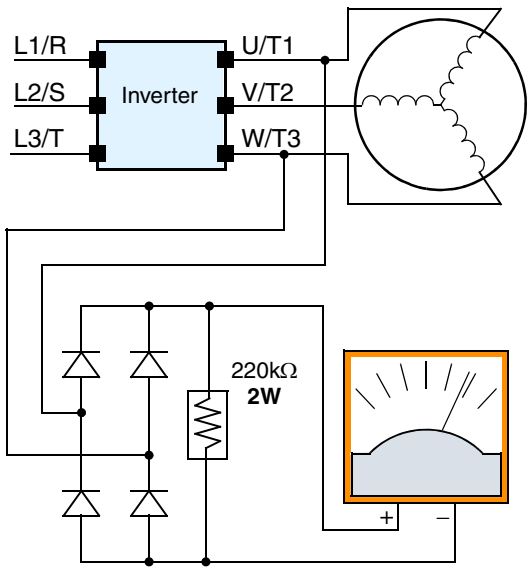

V class	Diode bridge	Voltmeter
200V class	600V 0.01A min.	300V range
400V class	1000V 0.1 A min.	600V range

Voltage measurement *without* load

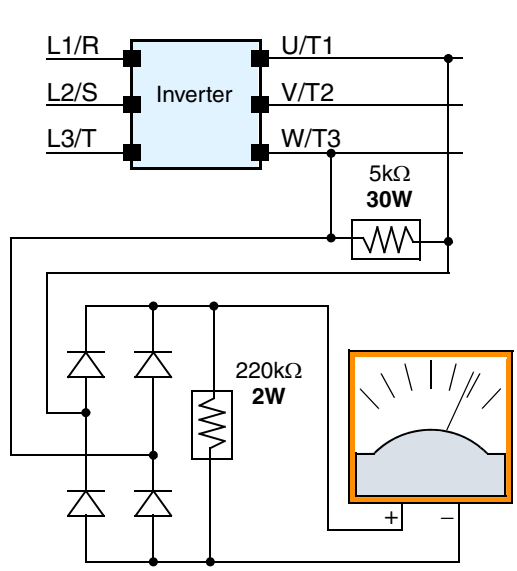

V class	Diode bridge	Voltmeter
200V class	600V 0.01A min.	300V range
400V class	1000V 0.1 A min.	600V range

HIGH VOLTAGE: Be careful not to touch wiring or connector terminals when working with the inverters and taking measurements. Be sure to place the measurement circuitry above in an insulated housing before using them.

Troubleshooting and Maintenance

IGBT Test Method

The following procedure will check the inverter transistors (IGBTs) and diodes:

1. Disconnect input power to terminals [R, S, and T] and motor terminals [U, V, and W].
2. Disconnect any wires from terminals [P] and [RB] for regenerative braking.
3. Use a Digital Volt Meter (DVM) and set it for 1 ohm resistance range. You can check the status of the charging state of terminals [R, S, T, U, V, W, RB, P, and N] of the inverter and the probe of the DVM by measuring the charging state.

Almost infinite ohms = "non-conducting," and 0 to 10 ohms = "conducting."

NOTE: The resistance values for the diodes or the transistors will not be exactly the same, but they will be close. If you find a significance difference, a problem may exist.

NOTE: Before measuring the voltage between [P] and [N] with the DC current range, confirm that the smoothing capacitor is discharged fully, then execute the tests.

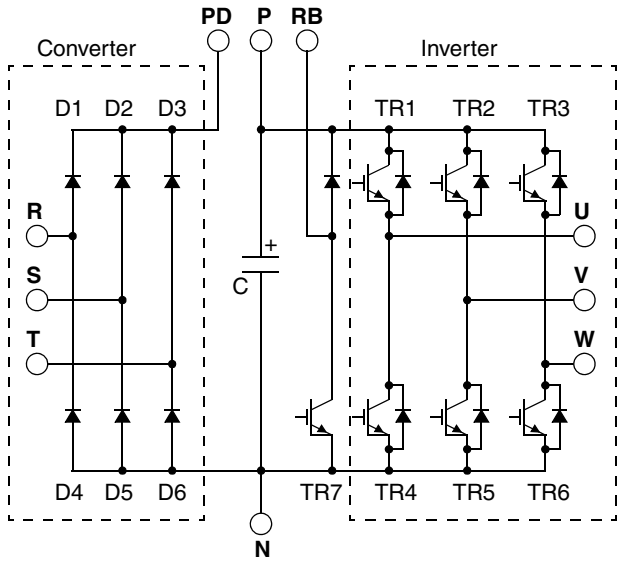

Circuit Type		DVM Probe +	DVM Probe –	Measured Value
Converter	D1	R	PD	Non-conducting
		PD	R	Conducting
	D2	S	PD	Non-conducting
		PD	S	Conducting
	D3	T	PD	Non-conducting
		PD	T	Conducting
	D4	R	N	Conducting
		N	R	Non-conducting
	D5	S	N	Conducting
		N	S	Non-conducting
	D6	T	N	Conducting
		N	T	Non-conducting
Inverter	TR1	U	P	Non-conducting
		P	U	Conducting
	TR2	V	P	Non-conducting
		P	V	Conducting
	TR3	W	P	Non-conducting
		P	W	Conducting
	TR4	U	N	Conducting
		N	U	Non-conducting
	TR5	V	N	Conduct
		N	V	Non-conducting
	TR6	W	N	Conducting
		N	W	Non-conducting
Dynamic Braking (0.4kW–11kW)	TR7	RB	P	Non-conducting
		P	RB	Conducting
		RB	N	Non-conducting
		N	RB	Non-conducting

Warranty

Warranty Terms

The warranty period under normal installation and handling conditions shall be two (2) years from the date of manufacture (“DATE” on product nameplate), or one (1) year from the date of installation, whichever occurs first. The warranty shall cover the repair or replacement, at Hitachi's sole discretion, of ONLY the inverter that was installed.

1. Service in the following cases, even within the warranty period, shall be charged to the purchaser:
   - **a.** Malfunction or damage caused by mis-operation or modification or improper repair
   - **b.** Malfunction or damage caused by a drop after purchase and transportation
   - **c.** Malfunction or damage caused by fire, earthquake, flood, lightning, abnormal input voltage, contamination, or other natural disasters
2. When service is required for the product at your work site, all expenses associated with field repair shall be charged to the purchaser.
3. Always keep this manual handy; please do not lose it. Please contact your Hitachi distributor to purchase replacement or additional manuals.

Glossary and Bibliography

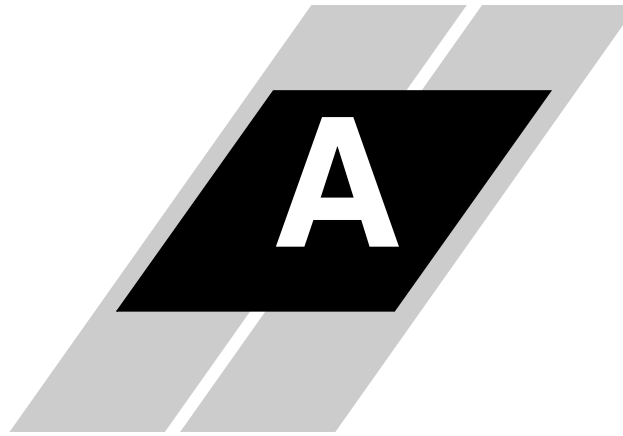

In This Appendix.... page

— Glossary 2
— Bibliography 6

Glossary

Ambient Temperature The air temperature in the chamber containing a powered electronic unit. A unit's heat sinks rely on a lower ambient temperature in order to dissipate heat away from sensitive electronics.

Arrival Frequency The arrival frequency refers to the set output frequency of the inverter for the constant speed setting. The arrival frequency feature turns ON an output when the inverter reaches the set constant speed. The inverter has various arrival frequencies and pulsed or latched logic options.

Auto-tuning The ability of a controller to execute a procedure that interacts with a load to determine the proper coefficients to use in the control algorithm. Auto-tuning is a common feature of process controllers with PID loops. Hitachi inverters feature auto-tuning to determine motor parameters for optimal commutation. Auto-tuning is available as a special command from a digital operator panel. See also *digital operator panel*.

Base Frequency The power input frequency for which an AC induction motor is designed to operate. Most motors will specify a 50 to 60 Hz value. The Hitachi inverters have a programmable base frequency, so you must ensure that parameter matches the attached motor. The term *base frequency* helps differentiate it from the carrier frequency. See also *carrier frequency* and *frequency setting*.

Braking Resistor An energy-absorbing resistor that dissipates energy from a decelerating load. Load inertia causes the motor to act as a generator during deceleration. See also *four-quadrant operation* and *dynamic braking.*

Break-away Torque The torque a motor must produce to overcome the static friction of a load in order to start the load moving.

Carrier Frequency The frequency of the constant, periodic, switching waveform that the inverter modulates to generate the AC output to the motor. See also *PWM*.

CE A regulatory agency for governing the performance of electronic products in Europe. Drive installations designed to have CE approval must have particular filter(s) installed in the application.

Choke An inductor that is tuned to react at radio frequencies is called a "choke," since it attenuates (chokes) frequencies above a particular threshold. Tuning is often accomplished by using a movable magnetic core. In variable-frequency drive systems, a choke positioned around high-current wiring can help attenuate harmful harmonics and protect equipment. See also *harmonics*.

DC Braking The inverter DC braking feature stops the AC commutation to the motor, and sends a DC current through the motor windings in order to stop the motor. Also called "DC injection braking," it has little effect at high speed, and is used as the motor is nearing a stop.

DC Link The portion of the variable frequency drive between the input rectifiers and the output stages. It delivers smoothed DC power to the control and output stages of the drive.

Deadband In a control system, the range of input change for which there is no perceptible change in the output. In PID loops, the error term may have a deadband associated with it. Deadband may or may not be desirable; it depends on the needs of the application.

Digital Operator Panel For Hitachi inverters, "digital operator panel" (DOP) refers first to the operator keypad on the front panel of the inverter. It also includes hand-held remote keypads, which connect to the inverter via a cable. Finally, the DOP Professional is a PC-based software simulation of the keypad devices.

Call 1(800)985-6929 for Sales hitachiacdrive.com sales@hitachiacdrive.com

Diode A semiconductor device that has a voltage-current characteristic that allows current to flow only in one direction, with negligible leakage current in the reverse direction. See also *rectifier*.

Duty Cycle 1. The percent of time a square wave of fixed frequency is ON (high) versus OFF (low). 2. The ratio of operating time of a motor, braking resistor, etc. to its resting time. This parameter usually is specified in association with the allowable thermal rise for the device.

Dynamic Braking The inverter dynamic braking feature shunts the motor-generated EMF energy into a special braking resistor. The added dissipation (braking torque) is effective at higher speeds, having a reduced effect as the motor nears a stop.

Error In process control, the error is the difference between the desired value or setpoint (SP) and the actual value of a the process variable (PV). See also *process variable* and *PID Loop*.

EMI Electromagnetic Interference - In motor/drive systems, the switching of high currents and voltages creates the possibility of generating radiated electrical noise that may interfere with the operation of nearby sensitive electrical instruments or devices. Certain aspects of an installation, such as long motor lead wire lengths, tend to increase the chance of EMI. Hitachi provides accessory filter components you can install to decrease the level of EMI.

Four-quadrant operation Referring to a graph of torque versus speed, a four-quadrant drive can turn the motor either forward or reverse, as well as decelerate in either direction (see also *reverse torque*). A load that has a relatively high inertia and must move in both directions and change directions rapidly requires four-quadrant capability from its drive.

Free-run Stop A method of stopping a motor, caused when the inverter simply turns OFF its motor output connections. This may allow the motor and load to coast to a stop, or a mechanical brake may intervene and shorten the deceleration time.

Frequency Setting While frequency has a broad meaning in electronics, it typically refers to motor speed for variable-frequency drives (inverters). This is because the output frequency of the inverter is variable, and is proportional to the attained motor speed. For example, a motor with a base frequency of 60 Hz can be speed controlled with an inverter output varying form 0 to 60 Hz. See also *base frequency*, *carrier frequency*, and *slip*.

Harmonics A *harmonic* is a whole number multiple of a base of fundamental frequency. The square waves used in inverters produce high-frequency harmonics, even though the main goal is to produce lower-frequency sine waves. These harmonics can be harmful to electronics (including motor windings) and cause radiated energy that interferes with nearby electronic devices. Chokes, line reactors, and filters are sometimes used to suppress the transmission of harmonics in an electrical system. See also c*hoke*.

Horsepower A unit of physical measure to quantify the amount of work done per unit of time. You can directly convert between horsepower and Watts as measurements of power.

IGBT **Insulated Gate Bipolar Transistor** (IGBT) - A semiconductor transistor capable of conducting very large currents when in saturation and capable of withstanding very high voltages when it is OFF. This high-power bipolar transistor is the type used in Hitachi inverters.

Inertia The natural resistance of an object to being accelerated or decelerated by an external force. See also *momentum*.

Intelligent Terminal A configurable input or output logic function on the Hitachi inverters. Each terminal may be assigned one of several functions.

Inverter A device that electronically changes DC to AC current through a alternating process of switching the input to the output, inverted and non-inverted. A variable speed drive such as the Hitachi SJ300 is also called an inverter, since it contains three inverter circuits to generate 3-phase output to the motor.

Call 1(800)985-6929 for Sales hitachiacdrive.com sales@hitachiacdrive.com

Isolation Transformer

A transformer with 1:1 voltage ratio that provides electrical isolation between its primary and secondary windings. These are typically used on the power input side of the device to be protected. An isolation transformer can protect equipment from a ground fault or other malfunction of nearby equipment, as well as attenuate harmful harmonics and transients on the input power.

Jogging Operation

Usually done manually, a jog command from an operator's panel requests the motor/drive system to run indefinitely in a particular direction, until the machine operator ends the jog operation.

Jump Frequency

A jump frequency is a point on the inverter output frequency range that you want the inverter to skip around. This feature may be used to avoid a resonant frequency, and you can program up to three jump frequencies in the inverter.

Line Reactor

A three-phase inductor generally installed in the AC input circuit of an inverter to minimize harmonics and to limit short-circuit current.

Momentum

The physical property of a body in motion that causes it to continue to remain in motion. In the case of motors, the rotor and attached load are rotating and possess angular momentum.

Multi-speed Operation

The ability of a motor drive to store preset discrete speed levels for the motor, and control motor speed according to the currently selected speed preset. The Hitachi inverters have 16 preset speeds.

Motor Load

In motor terminology, motor load consists of the inertia of the physical mass that is moved by the motor and the related friction from guiding mechanisms. See also *inertia*.

NEC

The National Electric Code is a regulatory document that governs electrical power and device wiring and installation in the United States.

NEMA

The National Electric Manufacturer's Association. NEMA Codes are a published series of device ratings standards. Industry uses these to evaluate or compare the performance of devices made by various manufacturers to a known standard.

Open-collector Outputs

A common logic-type discrete output that uses an NPN transistor that acts as a switch to a power supply common, usually ground. The transistor's *collector* is *open* for external connection (not connected internally). Thus, the output *sinks* external load current to ground.

Orientation

When using the expansion card SJ-FB with encoder feedback, the orientation feature is available. Also called *home search* in motion terminology, you can specify a search direction and a stop position. Typically the orientation procedure is necessary after each inverter powerup.

Power Factor

A ratio that expresses a phase difference (timing offset) between current and voltage supplied by a power source to a load. A perfect power factor = 1.0 (no phase offset). Power factors less than one cause some energy loss in power transmission wiring (source to load).

PID Loop

Proportional-Integral-Derivative – a mathematical model used for process control. A process controller maintains a process variable (PV) at a setpoint (SP) by using its PID algorithm to compensate for dynamic conditions and varies its output to drive the PV toward the desired value. See also *error.*

Process Variable

A physical property of a process that is of interest because it affects the quality of the primary task accomplished by the process. For an industrial oven, temperature is the process variable. See also *PID Loop* and *error.*

PWM

Pulse-width modulation: A type of AC adjustable frequency drive that accomplishes frequency and voltage control at the output section (inverter) of the drive. The drive output voltage waveform is at a constant amplitude, and by "chopping" the waveform (pulse-width-modulating), the average voltage is controlled. The chopping frequency is sometimes called the *carrier frequency.*

Call 1(800)985-6929 for Sales hitachiacdrive.com sales@hitachiacdrive.com

Reactance The impedance of inductors and capacitors has two components. The resistive part is constant, while the reactive part changes with applied frequency. These devices have a complex impedance (complex number), where the resistance is the real part and the reactance is the imaginary part.

Rectifier An electronic device made of one or more diodes that converts AC power into DC power. Rectifiers are usually used in combination with capacitors to filter (smooth) the rectified waveform to closely approximate a pure DC voltage source.

Regenerative Braking A particular method of generating reverse torque to a motor, an inverter will switch internally to allow the motor to become a generator and will either store the energy internally, deliver the braking energy back to the main power input, or dissipate it with a resistor.

Regulation The quality of control applied to maintain a parameter of interest at a desired value. Usually expressed as a percent (+/-) from the nominal, motor regulation usually refers to its shaft speed.

Reverse Torque The torque applied in the direction opposite to motor shaft rotation. As such, reverse torque is a decelerating force on the motor and its external load.

Rotor The windings of a motor that rotate, being physically coupled to the motor shaft. See also *stator.*

Saturation Voltage For a transistor semiconductor device, it is in saturation when an increase in input current no longer results in an increase in the output current. The saturation voltage is the voltage drop across the device. The ideal saturation voltage is zero.

Sensorless Vector Control A technique used in variable-frequency drives to rotate the force vector in the motor without the use of a shaft position sensor (angular). Benefits include an increase in torque at the lowest speed and the cost savings from the lack of a shaft position sensor.

Setpoint (SP) The setpoint is the desired value of a process variable of interest. See also *Process Variable (PV)* and *PID Loop*.

Single-phase Power An AC power source consisting of Hot and Neutral wires. An Earth Ground connection usually accompanies them. In theory, the voltage potential on Neutral stays at or near Earth Ground, while Hot varies sinusoidally above and below Neutral. This power source is named Single Phase to differentiate it from three-phase power sources. Some Hitachi inverters can accept single phase input power, but they all output three-phase power to the motor. See also *three-phase*.

Slip The difference between the theoretical (synchronous) speed of a motor at no load (determined by its inverter output waveforms) and the actual speed. Some slip is essential in order to develop torque to the load, but too much will cause excessive heat in the motor windings and/or cause the motor to stall.

Squirrel Cage A “nick-name” for the appearance of the rotor frame assembly for an AC induction motor.

Stator The windings in a motor that are stationary and coupled to the power input of the motor. See also *rotor.*

Start Frequency The output frequency that the inverter first produces as the frequency command setting increases from zero. The start frequency is programmable, and is important to set properly for the load, etc.

Tachometer 1. A signal generator usually attached to the motor shaft for the purpose of providing feedback to the speed controlling device of the motor. 2. A speed-monitoring test meter that may optically sense shaft rotation speed and display it on a readout.

Call 1(800)985-6929 for Sales hitachiacdrive.com sales@hitachiacdrive.com

Call 1(800)985-6929 for Sales hitachiacdrive.com sales@hitachiacdrive.com

Thermal Switch An electromechanical safety device that opens to stop current flow when the temperature at the device reaches a specific temperature threshold. Thermal switches are sometimes installed in the motor in order to protect the windings from heat damage. The inverter can use thermal switch signals to trip (shut down) if the motor overheats. See also *trip*.

Thermistor A type of temperature sensor that changes its resistance according to its temperature. The sensing range of thermistors and their ruggedness make them ideal for motor overheating detection. Hitachi inverters have built-in thermistor input circuits, which can detect an overheated motor and shut OFF (trip) the inverter output.

Three-phase Power An AC power source with three Hot connections that have phase offsets of 120 degrees is a 3-phase power source. Usually, Neutral and Earth Ground wires accompany the three Hot connections. Loads may be configured in a delta or Y configuration. A Y-connected load such as an AC induction motor will be a balanced load; the currents in all the Hot connections are the same. Therefore, the Neutral connection is theoretically zero. This is why inverters that generate 3-phase power for motors do not generally have a Neutral connection to the motor. However, the Earth Ground connection is important for safety reasons, and is provided.

Torque A measure of rotational force. The units of measurement are the product of the distance (radius from shaft center axis) and force (weight) applied at that distance. Units are usually given as pound-feet, ounce-inches, or Newton-meters.

Transistor A solid state, three-terminal device that provides amplification of signals and can be used for switching and control. While transistors have a linear operating range, inverters use them as high-powered switches. Recent developments in power semiconductors have produced transistors capable of handling high voltages and currents, all with high reliability. The saturation voltage has been decreasing, resulting in less heat dissipation. Hitachi inverters use state-of-the-art semiconductors to provide high performance and reliability in a compact package. See also *IGBT* and *saturation voltage*.

Trip An event that causes the inverter to stop operation is called a “trip” event (as in *tripping* a circuit breaker). The inverter keeps a history log of trip events. They also require an action to clear.

Watt Loss A measure of the internal power loss of a component, the difference between the power it consumes and what its output delivers. An inverter’s watt loss is the input power minus the power delivered to the motor. The watt loss is typically highest when an inverter is delivering its maximum output. Therefore, watt loss is usually specified for a particular output level. Inverter watt loss specifications are important when designing enclosures.

Bibliography

Title	Author and Publisher
Variable Speed Drive Fundamentals, 2nd Ed.	Phipps, Clarence A. The Fairmont Press, Inc. / Prentice-Hall, Inc. 1997 ISBN 0-13-636390-3
Electronic Variable Speed Drives	Brumbach, Michael E. Delmar Publishers 1997 ISBN 0-8273-6937-9
Hitachi Inverter Technical Guide Book	Published by Hitachi, Ltd. Japan 1995 Publication SIG-E002

Call 1(800)985-6929 for Sales hitachiacdrive.com sales@hitachiacdrive.com

Serial Communications

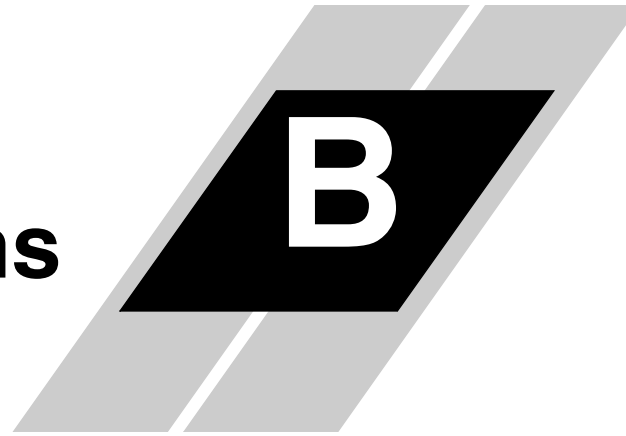

In This Appendix.... page

— Introduction 2
— Communications Protocol 5
— Communications Reference Information 17

Introduction

SJ300 inverters have a built-in RS485 serial communications interface. This serial communications function provides a way of controlling from 1 to 32 inverters on a common serial network. In a typical application, a host computer or controller is the master and each of the inverter(s) is a slave, as shown in the figure below.

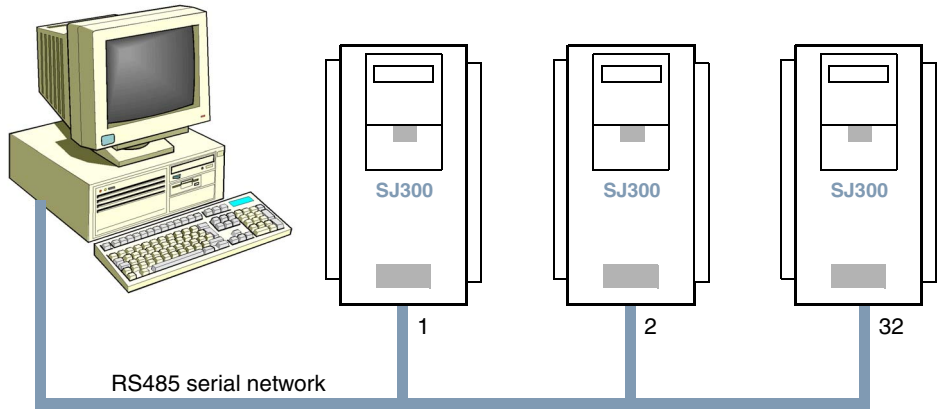

The specifications for SJ300 Series RS485 serial communications are in the following table:

Item	Specifications	User-selectable
Transmission speed	2400 / 4800 / 9600 / 19200 bps	✔
Communication modes	Half duplex (one device transmits at a time)	✘
Synchronization	Direct current transmission	✘
Character code	ASCII codes	✘
LSB placement	Transmits LSB first	✘
Electrical interface	RS485 differential transceiver	✘
Data bits	7 or 8 bits	✔
Parity	None / even / odd	✔
Stop bits	1 or 2 bits	✔
Start convention	One-way start from host device command	✘
Wait time for response	10 to 1000 ms	✔
Connections	Station address numbers from 1 to 32	✔
Error check	Overrun / Fleming block check code / vertical or horizontal parity	✘

Serial Connection Diagrams

The serial connector is to the left of the control logic connector as shown below:

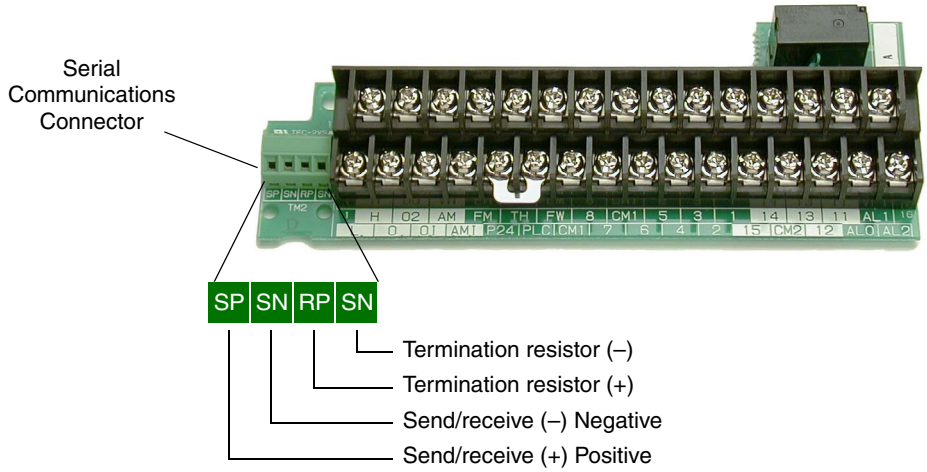

Each device requires just two connections for data transmission and reception. Additionally, the device at each physical end of the wiring requires a termination resistor. The SJ300 has built-in termination resistors that become part of the circuit when you add a jumper as shown.

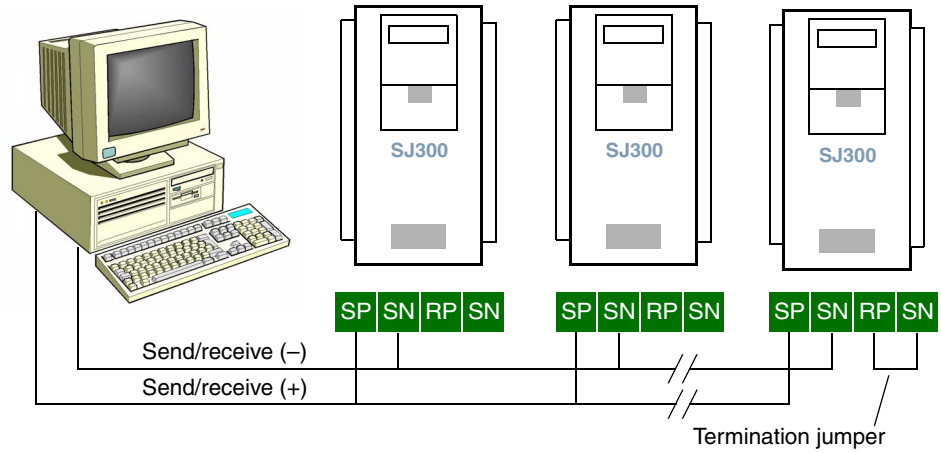

TIP: Each slave device on the serial network must have a unique node address, set by parameter C072. If this is a new application, we recommend connecting one new device at a time and checking the communications after each addition.

Serial Network Parameter Settings

Several parameter settings are necessary to configure serial communications, listed below.

Function Code	Item	Value	Description
C070	Data command source	02	Digital operator
		03	RS485 connector
		04	Expansion card #1
		05	Expansion card #2
C071	Baud rate	02	Loop-back test
		03	2400 bps
		04	4800 bps
		05	9600 bps
		06	19200 bps
C072	Node address	1 to 32, FF	1 to 32 – Node or station address (unique to each inverter or device) FF – Automatic broadcast (to all nodes on transmit, allowed only on certain commands (refer to each command description in this appendix)
C073	Data bits	07	7 bits
		08	8 bits
C074	Parity	00	none
		01	Even parity
		02	Odd parity
C075	Stop bits	01	1 bit
		02	2 bits
C078	Wait time	0 to 1000	0 to 1000 ms time that the inverter waits to respond to network master

For inverters on the same network, some settings must match from inverter to inverter. These include:

- Baud rate
- Data bits
- Parity
- Stop bits

However, the node address on each inverter must be unique, used only once on the network.

Communications Protocol

Introduction to Command List

The network master sends a frame to initiate communications with a slave, as shown in the figure to the right. After the set waiting time (per parameter C078, the inverter responds.

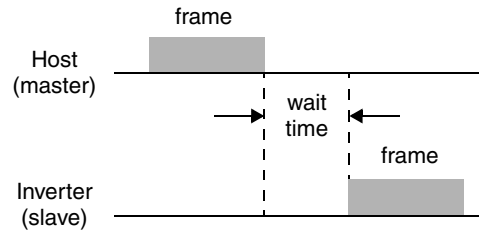

The following table lists the commands, single-character codes sent to a particular device on the network.

Command Code	Description	User-selectable
00	Forward / Reverse / Stop command	✔
01	Setting of frequency in standard profile	✔
02	Setting of intelligent terminal state	✔
03	Read all monitor data (block read)	—
04	Read inverter status	—
05	Read trip history	—
06	Read a single parameter value	—
07	Write a single parameter value	✔
08	Set inverter parameters to default values	✔
09	Verifies that the requested setting can be written to EEPROM.	—
0A	Writes a parameter value to EEPROM	✔
0B	Requests the recalculation of internal constant	✔

NOTE: Use of command 08 – set inverter parameters to default values first requires setting the initialization mode parameter B084 to 01 (initializes parameters only) or 02 (initializes parameters and clears the trip history).

Command – 00

The 00 command controls the Forward, Reverse and Stop mode of the inverter. You must set parameter A002=03 in order for serial communications control of the inverter to apply.

The frame format of command 00 follows the timing diagram and specification table.

Frame format

STX	Node	Command	Data	BCC	[CR]

Element	Description	Size	Value
STX	Control code (STart of TeXt)	1 byte	STX (0x02)
Node	Node (station) address of inverter	2 bytes	01 to 32, and FF (broadcast to all nodes)
Command	Transmission command	2 bytes	00
Data	Transmission data	1 byte	00 = Stop command 01 = Forward command 02 = Reverse command
BCC	Block check sum code	2 bytes	Exclusive OR of Node, Command, and Data
[CR]	Control code (carriage return)	1 byte	[CR] (0x0D)

The example below shows a transmission to the inverter at address Node 1 to rotate the motor in the forward direction.

(STX) | 01 | 00 | 1 | (BCC) | [CR] —to ASCII→ 02 | 30 31 | 30 30 | 31 | 33 30 | 0D

Command – 01

The 01 command sets the output frequency for the standard profile. You must set parameter A002=03 in order for serial communications control of the inverter to apply.

The frame format of command 01 follows the timing diagram and specification table.

Frame format

STX	Node	Command	Data	BCC	[CR]

Element	Description	Size	Value
STX	Control code (STart of TeXt)	1 byte	STX (0x02)
Node	Node (station) address of inverter	2 bytes	01 to 32, and FF (broadcast to all nodes)
Command	Transmission command	2 bytes	01
Data	Transmission data	6 bytes	ASCII code for ten times the frequency (accommodates two decimal places)
BCC	Block check sum code	2 bytes	Exclusive OR of Node, Command, and Data
[CR]	Control code (carriage return)	1 byte	[CR] (0x0D)

The example below shows a transmission to the inverter at address Node 1 to set the output frequency for 5 Hz. We use a value of 500 in ASCII to represent 5.00 Hz.

(STX) | 01 | 01 | 000500 | (BCC) | [CR]

—to ASCII→ 02 | 30 31 | 30 31 | 30 30 30 35 30 30 | 30 35 | 0D

Command – 02

The 02 command sets the logic state of the intelligent input terminals.

The frame format of command 02 follows the timing diagram and specification table.

Frame format

STX	Node	Command	Data	BCC	[CR]

Element	Description	Size	Value
STX	Control code (STart of TeXt)	1 byte	STX (0x02)
Node	Node (station) address of inverter	2 bytes	01 to 32, and FF (broadcast to all
Command	Transmission command	2 bytes	02
Data	Transmission data	16 bytes	(see table below)
BCC	Block check sum code	2 bytes	Exclusive OR of Node, Command, and Data
[CR]	Control code (carriage return)	1 byte	[CR] (0x0D)

The 16-byte data string is specified in the following table:

Data (Hex)	Description	Data (Hex)	Description
0000000000000001	[FW] Forward command	0000000001000000	[PIDC] PID integrator reset
0000000000000002	[RV] Reverse command	0000000002000000	—
0000000000000004	[CF1] Multi-speed 1	0000000004000000	[CAS] control gain switching function
0000000000000008	[CF2] Multi-speed 2	0000000008000000	[UP] remote control increment speed
0000000000000010	[CF3] Multi-speed 3	0000000010000000	[DWN] remote control decrement speed
0000000000000020	[CF4] Multi-speed 4	0000000020000000	[UDC] remote control clear up/down
0000000000000040	[JG] Jog operation	0000000040000000	—
0000000000000080	[DB] Dynamic braking	0000000080000000	[OPE] Force from operator terminal
0000000000000100	[SET] set 2nd motor	0000000100000000	[SF1] Multi-speed bit-level
0000000000000200	[2CH] 2-stage adjustable speed	0000000200000000	[SF2] Multi-speed bit-level
0000000000000400	—	0000000400000000	[SF3] Multi-speed bit-level
0000000000000800	[FRS] Free-run stop	0000000800000000	[SF4] Multi-speed bit-level
0000000000001000	[EXP] External trip	0000001000000000	[SF5] Multi-speed bit-level
0000000000002000	[USP] Unattended start protection	0000002000000000	[SF6] Multi-speed bit-level
0000000000004000	[CS] Commercial power change	0000004000000000	[SF7] Multi-speed bit-level
0000000000008000	[SFT] Software lock	0000008000000000	[OLR] Overload restriction setting
0000000000010000	[AT] analog input voltage/current	0000010000000000	[TL] Torque limit
0000000000020000	[SET3] Set 3rd motor	0000020000000000	[TRQ1] Torque limit select 1
0000000000040000	[RS] Reset	0000040000000000	[TRQ2] Torque limit select 2
0000000000080000	—	0000080000000000	[PPI P/PI] inverter mode select
0000000000100000	[STA] 3-wire Start	0000100000000000	[BOK] Brake confirmation
0000000000200000	[ST]P 3-wire Hold	0000200000000000	[ORT] Orientation (home) command
0000000000400000	[F/R] 3-wire FWD/REV	0000400000000000	[LAC] Linear Accel/decel Cancel
0000000000800000	[PID] PID enable	0000800000000000	[PCLR] Position error clear
—	—	0001000000000000	[STAT] Pulse train input enable

The arrangement of the terminal assignment data permits you to assign all inputs in a single command. The example below shows a transmission to the inverter at address Node 1 to set the Forward command, Multi-speed 1 and Multi-speed 2.

Sum the three data strings:

0x0000000000000001
+ 0x0000000000000004
+ 0x0000000000000008
= 0x000000000000000D

(STX) | 01 | 02 | 0x000000000000000D | (BCC) | (CR) → to ASCII

02 | 30 31 | 30 31 | 30 30 30 30 30 30 30 30 30 30 30 30 30 30 30 30 | 30 35 | 0D

Command – 03

The 03 command reads the monitor data as a single block.

The frame format of command 03 follows the diagram and specification table. The transmit frame has no data field.

Transmit frame format

STX	Node	Command	BCC	[CR]

Element	Description	Size	Value
STX	Control code (STart of TeXt)	1 byte	STX (0x02)
Node	Node (station) address of inverter	2 bytes	01 to 32
Command	Transmission command	2 bytes	03
BCC	Block check sum code	2 bytes	Exclusive OR of Node, Command, and Data
[CR]	Control code (carriage return)	1 byte	[CR] (0x0D)

The receive frame has a 104-byte data field, containing values for 13 items.

Receive frame format

STX	Node	Data	BCC	[CR]

Element	Description	Size	Value
STX	Control code (STart of TeXt)	1 byte	STX (0x02)
Node	Node (station) address of inverter	2 bytes	01 to 32
Data	Transmission data	104 bytes	(see next table)
BCC	Block check sum code	2 bytes	Exclusive OR of Node, Command, and Data
[CR]	Control code (carriage return)	1 byte	[CR] (0x0D)

The data in the receive frame contains 8-byte values for 13 items, listed in the table below:

No.	Monitor Item	Units	Multiplier
1	Output frequency	Hz	100
2	Output current	A	10
3	Direction of rotation	—	—
4	PID feedback monitor	%	100
5	Intelligent input monitor	—	—
6	Intelligent output monitor	—	—
7	Frequency converting monitor	—	100
8	Output torque monitor	%	1
9	Output voltage monitor	V	10
10	Electric power monitor	kW	10
11	Reserved	—	—
12	Run Mode time monitor	hours	1
13	Power ON time monitor	hours	1

The eight bytes for intelligent input or intelligent output data have a bit set in the data field for each I/O point that is ON, according to the following table:

Terminal	Monitor Item	Data
[FW]	Forward input	00000001
[1]	Input 1	00000002
[2]	Input 2	00000004
[3]	Input 3	00000008
[4]	Input 4	00000010
[5]	Input 5	00000020
[6]	Input 6	00000040
[7]	Input 7	00000080
[8]	Input 8	00000100
[AL]	Alarm relay	00000001
[11]	Output 1	00000002
[12]	Output 2	00000004
[13]	Output 3	00000008
[14]	Output 4	00000010
[15]	Output 5	00000020

Command – 04

The 04 command reads the status of the inverter. The frame format of command 04 follows the diagrams and specification tables. The transmit frame has no data field.

Transmit frame format

STX	Node	Command	BCC	[CR]

Element	Description	Size	Value
STX	Control code (STart of TeXt)	1 byte	STX (0x02)
Node	Node (station) address of inverter	2 bytes	01 to 32
Command	Transmission command	2 bytes	04
BCC	Block check sum code	2 bytes	Exclusive OR of Node, Command, and Data
[CR]	Control code (carriage return)	1 byte	[CR] (0x0D)

The receive frame has an 8-byte data field, containing values for three trip items (plus a reserved field).

Receive frame format

STX	Node	Data	BCC	[CR]

Element	Description	Size	Value
STX	Control code (STart of TeXt)	1 byte	STX (0x02)
Node	Node (station) address of inverter	2 bytes	01 to 32
Data	Transmission data	8 bytes	(see next table)
BCC	Block check sum code	2 bytes	Exclusive OR of Node, Command, and Data
[CR]	Control code (carriage return)	1 byte	[CR] (0x0D)

Trip data is organized as shown. The table below lists the codes and their meanings.

Data field contents

Status A	Status B	Status C	(reserved)

Code	Status A Definition	Status B Definition	Status C Definition
00	Initial status	On stopping	—
01	—	On running	Stop
02	On Stopping	On tripping	Deceleration speed
03	On running	—	Constant speed
04	On free-run stop	—	Acceleration speed
05	On jog	—	Forward
06	On dynamic braking	—	Reverse
07	On retry	—	Reverse from forward
08	On trip	—	Forward from reverse
09	On under-voltage	—	Forward start
10	—	—	Reverse start

Command – 05

The 05 command reads the inverter's trip history. The frame format of command 05 follows the diagrams and specification tables. The transmit frame has no data field.

Transmit frame format

STX	Node	Command	BCC	[CR]

Element	Description	Size	Value
STX	Control code (STart of TeXt)	1 byte	STX (0x02)
Node	Node (station) address of inverter	2 bytes	01 to 32
Command	Transmission command	2 bytes	05
BCC	Block check sum code	2 bytes	Exclusive OR of Node, Command, and Data
[CR]	Control code (carriage return)	1 byte	[CR] (0x0D)

The receive frame has a 440-byte data field. This consists of an 8-byte total accumulated number of trip events, followed by six 72-byte strings for the six most recent trip events as shown below.

Receive frame format

STX	Node	Data	BCC	[CR]

Data field contents

Total count	Trip 1	Trip 2	Trip 3	Trip 4	Trip 5	Trip 6

Element	Description	Size	Value
STX	Control code (STart of TeXt)	1 byte	STX (0x02)
Node	Node (station) address of inverter	2 bytes	01 to 32
Data	Transmission data	440 bytes	(see next table)
BCC	Block check sum code	2 bytes	Exclusive OR of Node, Command, and Data
[CR]	Control code (carriage return)	1 byte	[CR] (0x0D)

The nine bytes of data for each trip event history is listed below. The data contains the multiplier to adjust the decimal point. Divide the data by that factor to derive the actual value.

No.	Monitor Item	Units	Multiplier
1	Trip factor	—	—
2	Inverter Status A	—	—
3	Inverter Status B	—	—
4	Inverter Status C	—	—
5	Output frequency	Hz	10
6	Accumulated Run Mode time	hours	1
7	Output current	A	10
8	Output voltage	V	10
9	Power ON time	hours	1

For Command 05, bytes 2, 3, and 4 of the event history are status codes A, B, and C, respectively. The tables below provide status code descriptions.

Data field contents

	byte 2	byte 3	byte 4	
	Status A	Status B	Status C	

Code	Status A Definition	Status C Definition
00	Initial status	On reset
01	—	On stopping
02	On Stopping	On deceleration
03	On running	Constant speed
04	On free-run stop	On acceleration
05	On jog	On 0 Hz running
06	On dynamic braking	On running
07	On retry	On dynamic braking
08	On trip	On overload restriction
09	On under-voltage	—

Bit	Status B Definition	Error Code
0	Ground fault	E14
1	IGBT error, U phase	E30
2	Under-voltage error	E09
3	Over-voltage protection	E07
4	Thermal trip	E21
5	IGBT error, V phase	E30
6	IGBT error, W phase	E30
7	Gate array error	E23

Command – 06

The 06 command reads a single parameter value from the inverter, which is specified by the data field this read command.

Transmit frame format

STX	Node	Command	Data	BCC	[CR]

Element	Description	Size	Value
STX	Control code (STart of TeXt)	1 byte	STX (0x02)
Node	Node (station) address of inverter	2 bytes	01 to 32
Command	Transmission command	2 bytes	06
Data	Parameter specified to be read	4 bytes	(see tables below)
BCC	Block check sum code	2 bytes	Exclusive OR of Node, Command, and Data
[CR]	Control code (carriage return)	1 byte	[CR] (0x0D)

The receive frame includes an ACK (acknowledge) character, followed by an 8-byte data field.

Receive frame format

STX	Node	ACK	Data	BCC	[CR]

Element	Description	Size	Value
STX	Control code (STart of TeXt)	1 byte	STX (0x02)
Node	Node (station) address of inverter	2 bytes	01 to 32
ACK	Control code (ACKnowledge)	1 byte	ACK (0x06)
Data	Parameter value	8 bytes	Value of parameter times ten, returned as ASCII char. code, except for H003 and H203 (see table below)
BCC	Block check sum code	2 bytes	Exclusive OR of Node, Command, and Data
[CR]	Control code (carriage return)	1 byte	[CR] (0x0D)

Use the codes in the table below to return parameters for H03 and H203 (motor capacity selection).

Code Data	00	01	02	03	04	05	06	07	08	09	10
U.S. mode (B85=00, 02)	0.2 kW		0.4		0.75		1.5	2.,2		3.7	
EU mode (B85=01)	0.2 kW	0.37		0.55	0.75	1.1	1.5	2.2	3.0		4.0
Code Data	**11**	**12**	**13**	**14**	**15**	**16**	**17**	**18**	**19**	**20**	**21**
U.S. mode (B85=00, 02)	5.5 kW	7.5	11	15	18.5	22	30	37	45	55	75
EU mode (B85=01)	5.5 kW	7.5	11	15	18.5	22	30	37	45	55	75

Command – 07

The 07 command sets a parameter value equal to the value specified in the transmission.The frame format of command 07 follows the diagram and specification table.

Frame format

STX	Node	Command	Parameter	Data	BCC	[CR]

Element	Description	Size	Value
STX	Control code (STart of TeXt)	1 byte	STX (0x02)
Node	Node (station) address of inverter	2 bytes	01 to 32, and FF (broadcast to all nodes)
Command	Transmission command	2 bytes	07
Parameter	Function code of parameter	4 bytes	F002..., A001..., B001..., C001..., H003..., P001...
Data	Transmission data	8 bytes	Value of parameter times ten as ASCII char. code, except for H003 and H203 (see table below)
BCC	Block check sum code	2 bytes	Exclusive OR of Node, Command, and Data
[CR]	Control code (carriage return)	1 byte	[CR] (0x0D)

Note that the parameter F001, the output frequency, can be set more directly with host command 01 instead of with this command. Use the codes in the following table for setting parameters associated with H003 and H203.

Code Data	00	01	02	03	04	05	06	07	08	09	10
U.S. mode (B85=00, 02)	0.2 kW		0.4		0.75		1.5	2.,2		3.7	
EU mode (B85=01)	0.2 kW	0.37		0.55	0.75	1.1	1.5	2.2	3.0		4.0
Code Data	**11**	**12**	**13**	**14**	**15**	**16**	**17**	**18**	**19**	**20**	**21**
U.S. mode (B85=00, 02)	5.5 kW	7.5	11	15	18.5	22	30	37	45	55	75
EU mode (B85=01)	5.5 kW	7.5	11	15	18.5	22	30	37	45	55	75

Command – 08

The 08 command initializes the inverter parameters to the factory default values. First, you must set B84 (use command 07) to specify whether you want to clear the trip history at the same time. Also, set B85 to specify the country code for the initialization (use command 07).

The frame format of command 08 follows the diagram and specification table.

Frame format

STX	Node	Command	BCC	[CR]

Element	Description	Size	Value
STX	Control code (STart of TeXt)	1 byte	STX (0x02)
Node	Node (station) address of inverter	2 bytes	01 to 32, and FF (broadcast to all nodes)
Command	Transmission command	2 bytes	08
BCC	Block check sum code	2 bytes	Exclusive OR of Node, Command, and Data
[CR]	Control code (carriage return)	1 byte	[CR] (0x0D)

Command – 09

The 09 command verifies whether or not it is possible to set a particular parameter in the EEPROM. The frame format of command 08 follows the diagram and specification table.

Transmit frame format

STX	Node	Command	BCC	[CR]

Element	Description	Size	Value
STX	Control code (STart of TeXt)	1 byte	STX (0x02)
Node	Node (station) address of inverter	2 bytes	01 to 32
Command	Transmission command	2 bytes	09
BCC	Block check sum code	2 bytes	Exclusive OR of Node, Command, and Data
[CR]	Control code (carriage return)	1 byte	[CR] (0x0D)

The receive frame includes an ACK (acknowledge) character, followed by a 2-byte data field with the result.

Receive frame format

STX	Node	ACK	Data	BCC	[CR]

Element	Description	Size	Value
STX	Control code (STart of TeXt)	1 byte	STX (0x02)
Node	Node (station) address of inverter	2 bytes	01 to 32
ACK	Control code (ACKnowledge)	1 byte	ACK (0x06)
Data	Parameter value	2 bytes	00 = setting not allowed, 01 = setting is allowed
BCC	Block check sum code	2 bytes	Exclusive OR of Node, Command, and Data
[CR]	Control code (carriage return)	1 byte	[CR] (0x0D)

Command – 0A

The 0A command sets a value in the EEPROM.

The frame format of command 0A follows the diagram and specification table.

Frame format

STX	Node	Command	BCC	[CR]

Element	Description	Size	Value
STX	Control code (STart of TeXt)	1 byte	STX (0x02)
Node	Node (station) address of inverter	2 bytes	01 to 32, and FF (broadcast to all nodes)
Command	Transmission command	2 bytes	0A
BCC	Block check sum code	2 bytes	Exclusive OR of Node, Command, and Data
[CR]	Control code (carriage return)	1 byte	[CR] (0x0D)

Command – 0B

The 0B command recalculates the inverter's internal motor constants. Use this function after the base frequency or any Hxxx parameters are changed via the serial link commands.

The frame format of command 0B follows the diagram and specification table.

Frame format

STX	Node	Command	BCC	[CR]

Element	Description	Size	Value
STX	Control code (STart of TeXt)	1 byte	STX (0x02)
Node	Node (station) address of inverter	2 bytes	01 to 32
Command	Transmission command	2 bytes	0B
BCC	Block check sum code	2 bytes	Exclusive OR of Node, Command, and Data
[CR]	Control code (carriage return)	1 byte	[CR] (0x0D)

Communications Reference Information

Inverter Affirmative Reply

The standard affirmative reply from the inverter uses the ACK character (acknowledge) in the data field. The frame format of this reply follows the diagram and specification table.

Frame format

STX	Node	ACK	BCC	[CR]

Element	Description	Size	Value
STX	Control code (STart of TeXt)	1 byte	STX (0x02)
Node	Node (station) address of inverter	2 bytes	01 to 32
ACK	Control code (ACKnowledge)	1 byte	ACK (0x06)
BCC	Block check sum code	2 bytes	Exclusive OR of Node and ACK
[CR]	Control code (carriage return)	1 byte	[CR] (0x0D)

Inverter Negative Reply

The standard negative reply from the inverter uses the NAK character (negative acknowledge) in the data field. The frame format of this reply follows the diagram and specification table.

Frame format

STX	Node	NAK	Error code	BCC	[CR]

Element	Description	Size	Value
STX	Control code (STart of TeXt)	1 byte	STX (0x02)
Node	Node (station) address of inverter	2 bytes	01 to 32
NAK	Control code (Negative ACKnowledge)	1 byte	NAK (0x15)
Error code	Code representing error type	2 bytes	(See next table below)
BCC	Block check sum code	2 bytes	Exclusive OR of Node, Data, and NAK
[CR]	Control code (carriage return)	1 byte	[CR] (0x0D)

The error codes for a NAK (negative acknowledge) are:

Error Code	Error Description	Error Code	Error Description
01H	Parity error	07H	Receive buffer overrun error
02H	Check sum error	08H	Receive time-out error
03H	Framing error	11H	Abnormal command code error
04H	Overrun error	13H	Test error code
05H	Protocol error	16H	Abnormal parameter code/value error
06H	ASCII code error	—	—

Block Check Code (BCC)

This section shows how the inverter protocol computes defines a BCC—block check code. The BCC is calculated for each frame transmitted and can be used to verify the integrity of data transmission. The example below shows command 01 setting the inverter frequency to 5Hz.

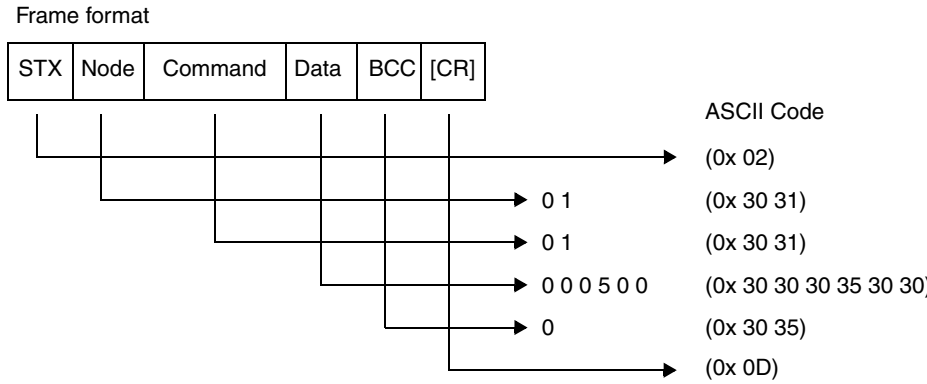

The block check code is computed by using the ASCII codes (shown above) and applying eXclusive OR (XOR) operations. Beginning with the first pair of bytes, the result of their XOR result is then used in an XOR operation with the third byte, and so on. For this example, the BCC calculation is shown below.

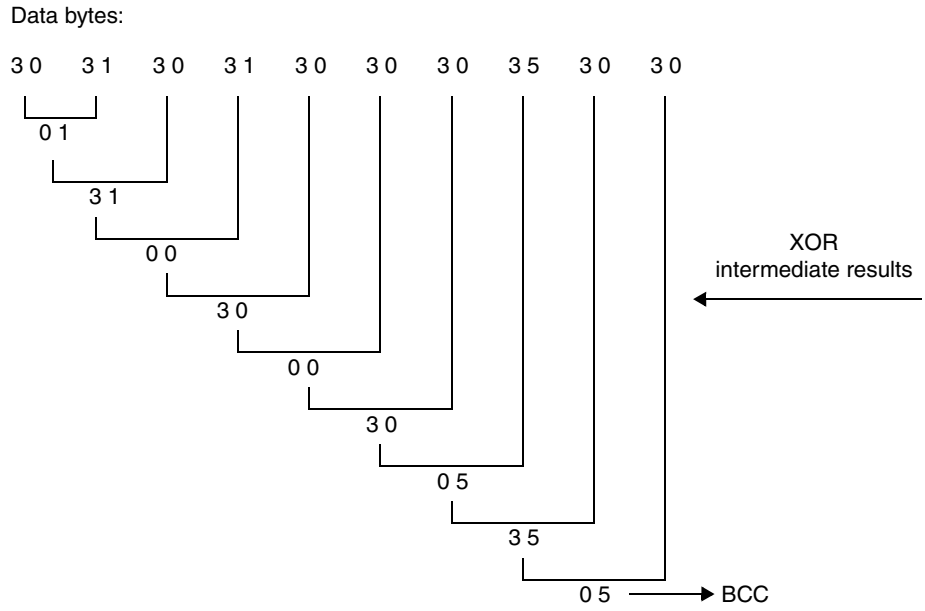

ASCII Code Table

The table below shows only the ASCII codes used for function codes and parameter data.

Character	ASCII Code	Character	ASCII Code	Character	ASCII Code
STX	0 2	4	3 4	C	4 3
ACK	0 6	5	3 5	D	4 4
CR	0 D	6	3 6	E	4 5
NAK	1 5	7	3 7	F	4 6
0	3 0	8	38	H	4 8
1	3 1	9	39	P	5 0
2	3 2	A	4 1	—	—
3	3 3	B	4 2	—	—

Communication Test Mode

The communication test mode verifies that the inverter can properly send and receive data via the RS485 serial port. Follow the steps below to perform the communication test.

1. Remove the serial cable (if present) connected to the TM2 connector block of the control terminals, as shown below.

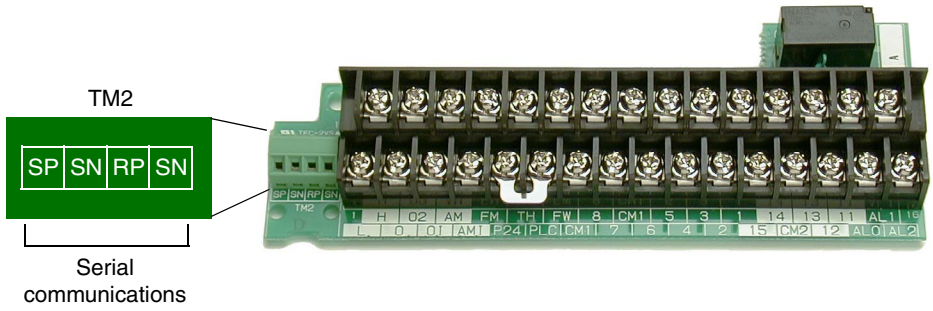

NOTE: It is not necessary to connect a loopback jumper. The RS485 port uses a transceiver for communications, which already allows simultaneous transmitting and receiving.

2. Use the front panel keypad to navigate to parameter C071, Communication Speed Selection. Change parameter C071=02 and press Store. Value 02 is the Test option. Now the inverter is ready to conduct the loopback test.
3. Turn the inverter power OFF and then ON again. Observe the keypad display and compare to the results shown below.

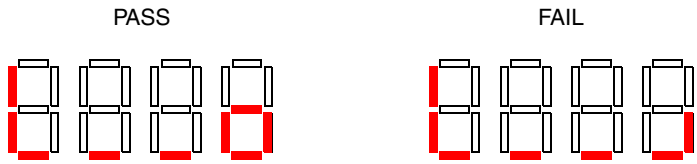

4. Press the Stop/Rest button on the keypad to return the inverter keypad/ display to normal operation.
5. Change C071 to its original setting (default is C071=04). Otherwise, while C071=02, the inverter will perform the communications loopback test at each powerup.

Drive Parameter Settings Tables

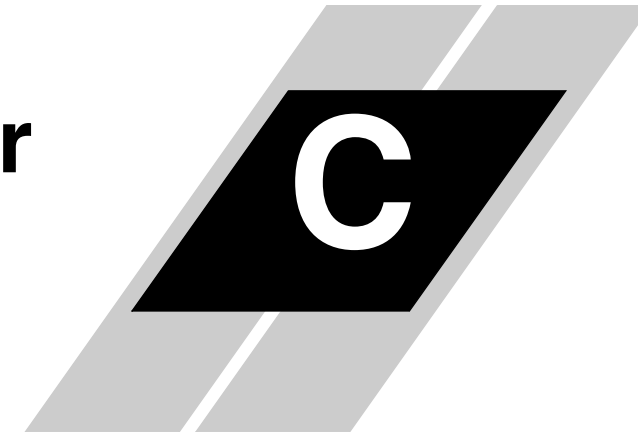

In This Appendix.... page

— Introduction 2
— Parameter Settings for Keypad Entry 2

Call 1(800)985-6929 for Sales hitachiacdrive.com sales@hitachiacdrive.com

Introduction

This appendix lists the user-programmable parameters for the SJ300 series inverters and the default values for European, U.S. and Japanese product types. The right-most column of the tables is blank so you can record values you have changed from the default. This involves just a few parameters for most applications.

Parameter Settings for Keypad Entry

SJ300 series inverters provide many functions and parameters that can be configured by the user. We recommend that you record all parameters that have been edited, in order to help in troubleshooting or recovery from a loss of parameter data.

Inverter model SJ300 _____

MFG. No. _____

} This information is printed on the specification label located on the right side of the inverter.

Main Profile Parameters

"F" Group Parameters		Default Setting			User Setting
Func. Code	Name	-FE (Europe)	-FU (U.S.)	-FR (Japan)	
F001	Output frequency setting	0.00	0.00	0.00	
F002	Acceleration (1) time setting	30.0	30.0	30.0	
F202	Acceleration (1) time setting, 2nd motor	30.0	30.0	30.0	
F302	Acceleration (1) time setting, 3rd motor	30.0	30.0	30.0	
F003	Deceleration (1) time setting	30.0	30.0	30.0	
F203	Deceleration (1) time setting, 2nd motor	30.0	30.0	30.0	
F303	Deceleration (1) time setting, 3rd motor	30.0	30.0	30.0	
F004	Keypad Run key routing	00	00	00	

Call 1(800)985-6929 for Sales hitachiacdrive.com sales@hitachiacdrive.com

Standard Functions

"A" Group Parameters		Default Setting			User Setting
Func. Code	Name	-FE (Europe)	-FU (U.S.)	-FR (Japan)	
A001	Frequency source setting	01	01	02	
A002	Run command source setting	01	01	02	
A003	Base frequency setting	50.	60.	60.	
A203	Base frequency setting, 2nd motor	50.	60.	60.	
A303	Base frequency setting, 3rd motor	50.	60.	60.	
A004	Maximum frequency setting	50.	60.	60.	
A204	Maximum frequency setting, 2nd motor	50.	60.	60.	
A304	Maximum frequency setting, 3rd motor	50.	60.	60.	
A005	[AT] selection	00	00	00	
A006	[O2] selection	03	03	03	
A011	[O]–[L] input active range start frequency	0.00	0.00	0.00	
A012	[O]–[L] input active range end frequency	0.00	0.00	0.00	
A013	[O]–[L] input active range start voltage	0.	0.	0.	
A014	[O]–[L] input active range end voltage	100.	100.	100.	
A015	[O]–[L] input start frequency enable	01	01	01	
A016	External frequency filter time const.	8.	8.	8.	
A019	Multi-speed operation selection	00	00	00	
A020	Multi-speed frequency setting	0.00	0.00	0.00	
A220	Multi-speed frequency setting, 2nd motor	0.00	0.00	0.00	
A320	Multi-speed frequency setting, 3rd motor	0.00	0.00	0.00	
A021	Multi-speed 1 setting	0.00	0.00	0.00	
A022	Multi-speed 2 setting	0.00	0.00	0.00	
A023	Multi-speed 3 setting	0.00	0.00	0.00	
A024	Multi-speed 4 setting	0.00	0.00	0.00	
A025	Multi-speed 5 setting	0.00	0.00	0.00	
A026	Multi-speed 6 setting	0.00	0.00	0.00	
A027	Multi-speed 7 setting	0.00	0.00	0.00	

"A" Group Parameters		Default Setting			User Setting
Func. Code	Name	-FE (Europe)	-FU (U.S.)	-FR (Japan)	
A028	Multi-speed 8 setting	0.00	0.00	0.00	
A029	Multi-speed 9 setting	0.00	0.00	0.00	
A030	Multi-speed 10 setting	0.00	0.00	0.00	
A031	Multi-speed 11 setting	0.00	0.00	0.00	
A032	Multi-speed 12 setting	0.00	0.00	0.00	
A033	Multi-speed 13 setting	0.00	0.00	0.00	
A034	Multi-speed 14 setting	0.00	0.00	0.00	
A035	Multi-speed 15 setting	0.00	0.00	0.00	
A038	Jog frequency setting	1.00	1.00	1.00	
A039	Jog stop mode	00	00	00	
A041	Torque boost method selection	00	000	00	
A241	Torque boost method selection, 2nd motor	00	00	00	
A042	Manual torque boost value	1.0	1.0	1.0	
A242	Manual torque boost value, 2nd motor	1.0	1.0	1.0	
A342	Manual torque boost value, 3rd motor	1.0	1.0	1.0	
A43	Manual torque boost frequency adjustment	5.0	5.0	5.0	
A243	Manual torque boost frequency adjustment, 2nd motor	5.0	5.0	5.0	
A343	Manual torque boost frequency adjustment, 3rd motor	5.0	5.0	5.0	
A44	V/F characteristic curve selection, 1st motor	00	00	00	
A244	V/F characteristic curve selection, 2nd motor	00	00	00	
A344	V/F characteristic curve selection, 3rd motor	00	00	00	
A045	V/f gain setting	100.	100.	100.	
A051	DC braking enable	00	00	00	
A052	DC braking frequency setting	0.50	0.50	0.50	
A053	DC braking wait time	0.0	0.0	0.0	
A054	DC braking force during deceleration	0.	0.	0.	
A055	DC braking time for deceleration	0.0	0.0	0.0	

"A" Group Parameters		Default Setting			User Setting
Func. Code	Name	-FE (Europe)	-FU (U.S.)	-FR (Japan)	
A056	DC braking / edge or level detection for [DB] input	01	01	01	
A057	DC braking force for starting	0.	0.	0.	
A058	DC braking time for starting	0.0	0.0	0.0	
A059	DC braking carrier frequency setting	5.0	5.0	5.0	
A061	Frequency upper limit setting	0.00	0.00	0.00	
A0261	Frequency upper limit setting, 2nd motor	0.00	0.00	0.00	
A062	Frequency lower limit setting	0.00	0.00	0.00	
A0262	Frequency lower limit setting, 2nd motor	0.00	0.00	0.00	
A063, A065, A067	Jump (center) frequency setting	0.00	0.00	0.00	
A064, A066, A068	Jump (hysteresis) frequency width setting	0.50	0.50	0.50	
A069	Acceleration stop frequency setting	0.00	0.00	0.00	
A070	Acceleration stop time frequency setting	0.0	0.0	0.0	
A071	PID Function Enable	00	00	00	
A072	PID proportional gain	1.0	1.0	1.0	
A073	PID integral time constant	1.0	1.0	1.0	
A074	PID derivative gain	0.0	0.0	0.0	
A075	PV scale conversion	1.00	1.00	1.00	
A076	PV source setting	00	00	00	
A081	AVR function select	00	00	00	
A082	AVR voltage select	230/400	230/460	200/400	
A085	Operation mode selection	00	00	00	
A086	Energy saving mode tuning	50.0	50.0	50.0	
A092	Acceleration (2) time setting	15.0	15.0	15.0	
A292	Acceleration (2) time setting, 2nd motor	15.0	15.0	15.0	
A392	Acceleration (2) time setting, 3rd motor	15.0	15.0	15.0	
A093	Deceleration (2) time setting	15.0	15.0	15.0	

"A" Group Parameters		Default Setting			User Setting
Func. Code	Name	-FE (Europe)	-FU (U.S.)	-FR (Japan)	
A293	Deceleration (2) time setting, 2nd motor	15.0	15.0	15.0	
A393	Deceleration (2) time setting, 3rd motor	15.0	15.0	15.0	
A094	Select method to switch to Acc2/ Dec2 profile	00	00	00	
A294	Select method to switch to Acc2/ Dec2, 2nd motor	00	00	00	
A095	Acc1 to Acc2 frequency transition point	0.0	0.0	0.0	
A295	Acc1 to Acc2 frequency transition point, 2nd motor	0.0	0.0	0.0	
A096	Dec1 to Dec2 frequency transition point	0.0	0.0	0.0	
A296	Dec1 to Dec2 frequency transition point, 2nd motor	0.0	0.0	0.0	
A097	Acceleration curve selection	00	00	00	
A098	Deceleration curve setting	00	00	00	
A101	[OI]–[L] input active range start frequency	0.00	0.00	0.00	
A102	[OI]–[L] input active range end frequency	0.00	0.00	0.00	
A103	[OI]–[L] input active range start current	20.	20.	20.	
A104	[OI]–[L] input active range end current	100.	100.	100.	
A105	[OI]–[L] input start frequency enable	01	01	01	
A111	[O2]–[L] input active range start frequency	0.00	0.00	0.00	
A112	[O2]–[L] input active range end frequency	0.00	0.00	0.00	
A113	[O2]–[L] input active range start voltage	–100.	–100.	–100.	
A114	[O2]–[L] input active range end voltage	100.	100.	100.	
A131	Acceleration curve constants setting	02	02	02	
A132	Deceleration curve constants setting	02	02	02	

Fine Tuning Functions

"B" Group Parameters		Default Setting			User Setting
Func. Code	Name	-FE (Europe)	-FU (U.S.)	-FR (Japan)	
B001	Selection of restart mode	00	00	00	
B002	Allowable under-voltage power failure time	1.0	1.0	1.0	
B003	Retry wait time before motor restart	1.0	1.0	1.0	
B004	Instantaneous power failure / under-voltage trip alarm enable	00	00	00	
B005	Number of restarts on power failure / under-voltage trip events	00	00	00	
B006	Phase loss detection enable	00	00	00	
B007	Restart frequency threshold	0.00	0.00	0.00	
B012	Electronic thermal setting (calculated within the inverter from current output)	Rated current for each inverter	Rated current for each inverter	Rated current for each inverter	
B212	Electronic thermal setting (calculated within the inverter from current output), 2nd motor	Rated current for each inverter	Rated current for each inverter	Rated current for each inverter	
B312	Electronic thermal setting (calculated within the inverter from current output), 3rd motor	Rated current for each inverter	Rated current for each inverter	Rated current for each inverter	
B013	Electronic thermal characteristic	01	01	00	
B213	Electronic thermal characteristic, 2nd motor	01	01	00	
B313	Electronic thermal characteristic, 3rd motor	01	01	00	
B015	Free setting, electronic thermal frequency (1)	0.	0.	0.	
B016	Free setting, electronic thermal current (1)	0.0	0.0	0.0	
B017	Free setting, electronic thermal frequency (2)	0.	0.	0.	
B018	Free setting, electronic thermal current (2)	0.0	0.0	0.0	
B019	Free setting, electronic thermal frequency (3)	0.	0.	0.	
B020	Free setting, electronic thermal current (3)	0.0	0.0	0.0	
B021	Overload restriction operation mode	01	01	01	
B022	Overload restriction setting	Rated current x 1.50	Rated current x 1.50	Rated current x 1.50	

Call 1(800)985-6929 for Sales hitachiacdrive.com sales@hitachiacdrive.com

"B" Group Parameters		Default Setting			User Setting
Func. Code	Name	-FE (Europe)	-FU (U.S.)	-FR (Japan)	
B023	Deceleration rate at overload restriction	1.0	1.0	1.0	
B024	Overload restriction operation mode (2)	01	01	01	
B025	Overload restriction setting (2)	Rated current x 1.50	Rated current x 1.50	Rated current x 1.50	
B026	Deceleration rate at overload restriction (2)	1.00	1.00	1.00	
B031	Software lock mode selection	01	01	01	
B034	Run/power-on warning time	0.	0.	0.	
B035	Rotational direction restriction	00	00	00	
B036	Reduced voltage start selection	06	06	06	
B037	Function code display restriction	00	00	00	
B040	Torque limit selection	00	00	00	
B041	Torque limit (1) (forward-driving in 4-quadrant mode)	150.	150.	150.	
B042	Torque limit (2) (reverse-regenerating in 4-quadrant mode)	150.	150.	150.	
B043	Torque limit (3) (reverse-driving in 4-quadrant mode)	150.	150.	150.	
B044	Torque limit (4) (forward-regenerating in 4-quadrant mode)	150.	150.	150.	
B045	Torque limit LADSTOP enable	00	00	00	
B046	Reverse Run protection enable	00	00	00	
B050	Controller deceleration and stop on power loss	00	00	00	
B051	DC bus voltage trigger level during power loss	0.0	0.0	0.0	
B052	Over-voltage threshold during power loss	0.0	0.0	0.0	
B053	Deceleration time setting during power loss	1.00	1.00	1.00	
B054	Initial output frequency decrease during power loss	0.00	0.00	0.00	
B080	[AM] terminal analog meter adjustment	180	180	180	
B081	[FM] terminal analog meter adjustment	60	60	60	
B082	Start frequency adjustment	0.50	0.50	0.50	
B083	Carrier frequency setting	5.0	5.0	5.0	

Call 1(800)985-6929 for Sales hitachiacdrive.com sales@hitachiacdrive.com

"B" Group Parameters		Default Setting			User Setting
Func. Code	Name	-FE (Europe)	-FU (U.S.)	-FR (Japan)	
B084	Initialization mode (parameters or trip history)	00	00	00	
B085	Country code for initialization	01	02	00	
B086	Frequency scaling conversion factor	1.0	1.0	1.0	
B087	STOP key enable	00	00	00	
B088	Restart mode after FRS	00	00	00	
B090	Dynamic braking usage ratio	0.0	0.0	0.0	
B091	Stop mode selection	00	00	00	
B092	Cooling fan control	00	00	00	
B095	Dynamic braking control	00	00	00	
B096	Dynamic braking activation level	360/720	360/720	360/720	
B098	Thermistor for thermal protection control	00	00	00	
B099	Thermal protection level setting	3000.	3000.	3000.	
B100	Free-setting V/f frequency (1)	0.	0.	0.	
B101	Free-setting V/f voltage (1)	0.0	0.0	0.0	
B102	Free-setting V/f frequency (2)	0.	0.	0.	
B103	Free-setting V/f voltage (2)	0.0	0.0	0.0	
B104	Free-setting V/f frequency (3)	0.	0.	0.	
B105	Free-setting V/f voltage (3)	0.0	0.0	0.0	
B106	Free-setting V/f frequency (4)	0.	0.	0.	
B107	Free-setting V/f voltage (4)	0.0	0.0	0.0	
B108	Free-setting V/f frequency (5)	0.	0.	0.	
B109	Free-setting V/f voltage (5)	0.0	0.0	0.0	
B110	Free-setting V/f frequency (6)	0.	0.	0.	
B111	Free-setting V/f voltage (6)	0.0	0.0	0.0	
B112	Free-setting V/f frequency (7)	0.	0.	0.	
B113	Free-setting V/f voltage (7)	0.0	0.0	0.0	
B120	Brake Control Enable	00	00	00	
B121	Brake Wait Time for Release	0.00	0.00	0.00	
B122	Brake Wait Time for Acceleration	0.00	0.00	0.00	
B123	Brake Wait Time for Stopping	0.00	0.00	0.00	
B124	Brake Wait Time for Confirmation	0.00	0.00	0.00	
B125	Brake Release Frequency Setting	0.00	0.00	0.00	

"B" Group Parameters		Default Setting			User Setting
Func. Code	Name	-FE (Europe)	-FU (U.S.)	-FR (Japan)	
B126	Brake Release Current Setting	Rated current for each inverter	Rated current for each inverter	Rated current for each inverter	

Intelligent Terminal Functions

"C" Group Parameters		Default Setting			User Setting
Func. Code	Name	-FE (Europe)	-FU (U.S.)	-FR (Japan)	
C001	Terminal [1] function	18	18	18	
C002	Terminal [2] function	16	16	16	
C003	Terminal [3] function	06	06	06	
C004	Terminal [4] function	11	11	11	
C005	Terminal [5] function	09	09	09	
C006	Terminal [6] function	03	13	03	
C007	Terminal [7] function	02	02	02	
C008	Terminal [8] function	01	01	01	
C011	Terminal [1] active state	00	00	00	
C012	Terminal [2] active state	00	00	00	
C013	Terminal [3] active state	00	00	00	
C014	Terminal [4] active state	00	00	00	
C015	Terminal [5] active state	00	00	00	
C016	Terminal [6] active state	00	01	00	
C017	Terminal (7) active state	00	00	00	
C018	Terminal [8] active state	00	00	00	
C019	Terminal [FW] active state	00	00	00	
C021	Terminal [11] function	01	01	01	
C022	Terminal [12] function	00	00	00	
C023	Terminal [13] function	03	03	03	
C024	Terminal [14] function	07	07	07	
C025	Terminal [15] function	08	08	08	
C026	Alarm relay terminal function	05	05	05	
C027	[FM] signal selection	00	00	00	
C028	[AM] signal selection	00	00	00	
C029	[AMI] signal selection	00	00	00	

"C" Group Parameters		Default Setting			User Setting
Func. Code	Name	-FE (Europe)	-FU (U.S.)	-FR (Japan)	
C031	Terminal [11] active state	00	00	00	
C032	Terminal [12] active state	00	00	00	
C033	Terminal [13] active state	00	00	00	
C034	Terminal [14] active state	00	00	00	
C035	Terminal [15] active state	00	00	00	
C036	Alarm relay active state	01	01	01	
C040	Overload signal output mode	01	01	01	
C041	Overload level setting	Rated current for each inverter	Rated current for each inverter	Rated current for each inverter	
C042	Frequency arrival setting for accel.	0.00	0.00	0.00	
C043	Arrival frequency setting for decel.	0.00	0.00	0.00	
C044	PID deviation level setting	3.0	3.0	3.0	
C045	Frequency arrival setting for acceleration (2)	0.00	0.00	0.00	
C046	Frequency arrival setting for deceleration (2)	0.00	0.00	0.00	
C055	Over-torque (forward-driving) level setting	100.	100.	100.	
C056	Over-torque (reverse regenerating) level setting	100.	100.	100.	
C057	Over-torque (reverse driving) level setting	100.	100.	100.	
C058	Over-torque (forward regenerating) level setting	100.	100.	100.	
C061	Electronic thermal warning level setting	80.	80.	80.	
C062	Alarm code output	00	00	00	
C063	Zero speed detection level	0.00	0.00	0.00	
C070	Data command method	02	02	02	
C071	Communication speed selection	04	04	04	
C072	Node allocation	1.	1.	1.	
C073	Communication data length selection	7	7	7	
C074	Communication parity selection	00	00	00	
C075	Communication stop bit selection	1	1	1	
C078	Communication wait time	0.	0.	0.	
C081	[O] input span calibration	Factory set	Factory set	Factory set	

"C" Group Parameters		Default Setting			User Setting
Func. Code	Name	-FE (Europe)	-FU (U.S.)	-FR (Japan)	
C082	[OI] input span calibration	Factory set	Factory set	Factory set	
C083	[O2] input span calibration	Factory set	Factory set	Factory set	
C085	Thermistor input tuning	105.0	105.0	105.0	
C086	[AM] terminal offset tuning	0.0	0.0	0.0	
C087	[AMI] terminal meter tuning	80.	80.	80.	
C088	[AMI] terminal offset tuning	Factory set	Factory set	Factory set	
C091	Debug mode enable	00	00	00	Do not edit
C101	Up/Down memory mode selection	00	00	00	
C102	Reset mode selection	00	00	00	
C103	Restart mode after reset	00	00	00	
C111	Overload setting (2)	Rated current for each inverter model	Rated current for each inverter model	Rated current for each inverter model	
C121	[O] input zero calibration	Factory set	Factory set	Factory set	
C122	[OI] input zero calibration	Factory set	Factory set	Factory set	
C123	[O2] input zero calibration	Factory set	Factory set	Factory set	

Motor Constants Functions

"H" Group Parameters		Default Setting			User Setting
Func. Code	Name	-FE (Europe)	-FU (U.S.)	-FR (Japan)	
H001	Auto-tuning Setting	00	00	00	
H002	Motor data selection, 1st motor	00	00	00	
H202	Motor data selection, 2nd motor	00	00	00	
H003	Motor capacity, 1st motor	Factory set	Factory set	Factory set	
H203	Motor capacity, 2nd setting	Factory set	Factory set	Factory set	
H004	Motor poles setting, 1st motor	4	4	4	
H204	Motor poles setting, 2nd motor	4	4	4	
H005	Motor speed constant, 1st motor	1.590	1.590	1.590	
H205	Motor speed constant, 2nd motor	1.590	1.590	1.590	
H006	Motor stabilization constant, 1st motor	100.	100.	100.	
H206	Motor stabilization constant, 2nd motor	100.	100.	100.	
H306	Motor stabilization constant, 3rd motor	100.	100.	100.	
H20	Motor constant R1, 1st motor	According to inverter rating	According to inverter rating	According to inverter rating	
H220	Motor constant R1, 2nd motor	According to inverter rating	According to inverter rating	According to inverter rating	
H021	Motor constant R2, 1st motor	According to inverter rating	According to inverter rating	According to inverter rating	
H221	Motor constant R2, 2nd motor	According to inverter rating	According to inverter rating	According to inverter rating	
H022	Motor constant L, 1st motor	According to inverter rating	According to inverter rating	According to inverter rating	
H222	Motor constant L, 2nd motor	According to inverter rating	According to inverter rating	According to inverter rating	
H023	Motor constant Io	According to inverter rating	According to inverter rating	According to inverter rating	
H223	Motor constant Io, 2nd motor	According to inverter rating	According to inverter rating	According to inverter rating	
H024	Motor Constant J	According to inverter rating	According to inverter rating	According to inverter rating	
H224	Motor constant J, 2nd motor	According to inverter rating	According to inverter rating	According to inverter rating	
H030	Auto constant R1, 1st motor	According to inverter rating	According to inverter rating	According to inverter rating	
H230	Auto constant R1, 2nd motor	According to inverter rating	According to inverter rating	According to inverter rating	

"H" Group Parameters		Default Setting			User Setting
Func. Code	Name	-FE (Europe)	-FU (U.S.)	-FR (Japan)	
H031	Auto constant R2, 1st motor	According to inverter rating	According to inverter rating	According to inverter rating	
H231	Auto constant R2, 2nd motor	According to inverter rating	According to inverter rating	According to inverter rating	
H032	Auto constant L, 1st motor	According to inverter rating	According to inverter rating	According to inverter rating	
H232	Auto constant L, 2nd motor	According to inverter rating	According to inverter rating	According to inverter rating	
H033	Auto constant Io, 1st motor	According to inverter rating	According to inverter rating	According to inverter rating	
H233	Auto constant Io, 2nd motor	According to inverter rating	According to inverter rating	According to inverter rating	
H034	Auto constant J, 1st motor	According to inverter rating	According to inverter rating	According to inverter rating	
H234	Auto constant J, 2nd motor	According to inverter rating	According to inverter rating	According to inverter rating	
H050	PI proportional gain for 1st motor	100.0	100.0	100.0	
H250	PI proportional gain for 2nd motor	100.0	100.0	100.0	
H051	PI integral gain for 1st motor	100.0	100.0	100.0	
H251	PI integral gain for 2nd motor	100.0	100.0	100.0	
H052	P proportional gain setting for 1st motor	1.00	1.00	1.00	
H252	P proportional gain setting for 2nd motor	1.00	1.00	1.00	
H060	Zero LV limit for 1st motor	100.	100.	100.	
H260	Zero LV limit for 2nd motor	100.	100.	100.	
H070	Terminal selection PI proportional gain setting	100.0	100.0	100.0	
H071	Terminal selection PI integral gain setting	100.0	100.0	100.0	
H072	Terminal selection P proportional gain setting	1.00	1.00	1.00	

Expansion Card Functions

"P" Group Parameters		Default Setting			User Setting
Func. Code	Name	-FE (Europe)	-FU (U.S.)	-FR (Japan)	
P001	Operation mode on expansion card 1 error	00	00	00	
P002	Operation mode on expansion card 2 error	00	00	00	
P010	Feedback option enable	00	00	00	
P011	Encoder pulse-per-revolution (PPR) setting	1024	1024	1024	
P012	Control pulse setting	00	00	00	
P013	Pulse line mode setting	00	00	00	
P014	Home search stop position setting	0.	0.	0.	
P015	Home search speed setting	5.00	5.00	5.00	
P016	Home search direction setting	00	00	00	
P017	Home search completion range setting	5	5	5	
P018	Home search completion delay time setting	0.00	0.00	0.00	
P019	Electronic gear set position selection	00	00	00	
P020	Electronic gear ratio numerator setting	1.	1.	1.	
P021	Electronic gear ratio denominator setting	1.	1.	1.	
P022	Feed-forward gain setting	0.00	0.00	0.00	
P023	Position loop gain setting	0.50	0.50	0.50	
P025	Temperature compensation thermistor enable	00	00	00	
P026	Over-speed error detection level setting	135.0	135.0	135.0	
P027	Speed deviation error detection level setting	7.50	7.50	7.50	
P031	Accel/decel time input selection	00	00	00	
P032	Positioning command input selection	00	00	00	
P044	DeviceNet comm watchdog timer	01	01	01	
P045	Inverter action on DeviceNet comm error	21	21	21	
P046	DeviceNet polled I/O: Output instance number	71	71	71	

"P" Group Parameters		Default Setting			User Setting
Func. Code	Name	-FE (Europe)	-FU (U.S.)	-FR (Japan)	
P047	DeviceNet polled I/O: Input instance number	01	01	01	
P048	Inverter action on DeviceNet idle mode	0	0	0	
P049	Motor poles setting for RPM	01	01	01	

User-selectable Menu Functions

"P" Group Parameters		Default Setting			User Setting
Func. Code	Name	-FE (Europe)	-FU (U.S.)	-FR (Japan)	
U001	User-selected function... "no" = disabled, or use any of the functions D001 to P049	no	no	no	
U002		no	no	no	
U003		no	no	no	
U004		no	no	no	
U005		no	no	no	
U006		no	no	no	
U007		no	no	no	
U008		no	no	no	
U009		no	no	no	
U010		no	no	no	
U011		no	no	no	
U012		no	no	no	

CE–EMC Installation Guidelines

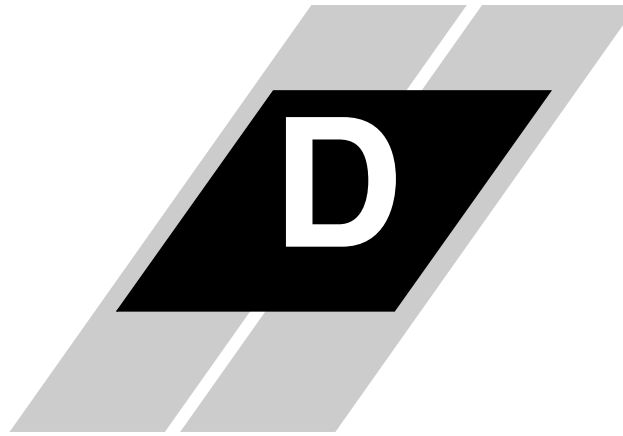

In This Appendix.... page

— CE–EMC Installation Guidelines 2
— Hitachi EMC Recommendations 4

Call 1(800)985-6929 for Sales hitachiacdrive.com sales@hitachiacdrive.com

CE–EMC Installation Guidelines

You are required to satisfy the EMC directive (89/336/EEC) when using an SJ300 inverter in an EU country. To satisfy the EMC directive and to comply with standard, follow the guidelines in this section.

1. **As user you must ensure that the HF (high frequency) impedance between adjustable frequency inverter, filter, and ground is as small as possible.**
   - Ensure that the connections are metallic and have the largest possible contact areas (zinc-plated mounting plates).
2. **Avoid conductor loops that act like antennas, especially loops that encompass large areas.**
   - Avoid unnecessary conductor loops.
   - Avoid parallel arrangement of low-level signal wiring and power-carrying or noise-prone conductors.
3. **Use shielded wiring for the motor cable and all analog and digital control lines.**
   - Allow the effective shield area of these lines to remain as large as possible; i.e., do not strip away the shield (screen) further away from the cable end than absolutely necessary.
   - With integrated systems (for example, when the adjustable frequency inverter is communicating with some type of supervisory controller or host computer in the same control cabinet and they are connected at the same PE-potential), connect the shields of the control lines to ground + PE (protective earth) at both ends. With distributed systems (for example the communicating supervisory controller or host computer is not in the same control cabinet and there is a distance between the systems), we recommend connecting the shield of the control lines only at the end connecting to the adjustable frequency inverter. If possible, route the other end of the control lines directly to the cable entry section of the supervisory controller or host computer. The shield conductor of the motor cables always must connected to PE at both ends.
   - To achieve a large area contact between shield and PE-potential, use a PG screw with a metallic shell, or use a metallic mounting clip.
   - Use only cable with braided, tinned copper mesh shield (type “CY”) with 85% coverage.
   - The shielding continuity should not be broken at any point in the cable. If the use of reactors, contactors, terminals, or safety switches in the motor output is necessary, the unshielded section should be kept as short as possible.
   - Some motors have a rubber gasket between terminal box and motor housing. Very often, the terminal boxes, and particularly the threads for the metal PG screw connections, are painted. Make sure there is always a good metallic connection between the shielding of the motor cable, the metal PG screw connection, the terminal box, and the motor housing. If necessary, carefully remove paint between conducting surfaces.
4. **Take measures to minimize interference that is frequently coupled in through installation cables.**
   - Separate interfering cables with 0.25m minimum from cables susceptible to interference. A particularly critical point is laying parallel cables over longer distances. If two cables intersect (one crosses over the other), the interference is smallest if they intersect at an angle of 90°. Cables susceptible to interference should therefore only intersect motor cables, intermediate circuit cables, or the wiring of a rheostat at right angles and never be laid parallel to them over longer distances.
5. **Minimize the distance between an interference source and an interference sink (interference-threatened device), thereby decreasing the effect of the emitted interference on the interference sink.**
   - You should use only interference-free devices and maintain a minimum distance of 0.25 m from the adjustable frequency inverter.

Call 1(800)985-6929 for Sales hitachiacdrive.com sales@hitachiacdrive.com

6. **Follow safety measures in the filter installation.**
   - Ensure that the protective earth terminal (PE) of the filter is properly connected to the PE terminal of the adjustable frequency inverter. An ***HF ground connection*** via metal contact between the housings of the filter and the adjustable frequency inverter, or solely via cable shield, *is not permitted as a protective conductor connection*. The *filter must be solidly and permanently connected with the ground potential* so as to preclude the danger of electric shock upon touching the filter if a fault occurs.

To achieve a protective ground connection for the filter:

- Ground the filter with a conductor of at least 10 mm^2 cross-sectional area.
- Connect a second grounding conductor, using a separate grounding terminal parallel to the protective conductor. (The cross section of each single protective conductor terminal must be sized for the required nominal load.)

SJ300 inverter with footprint-type filter

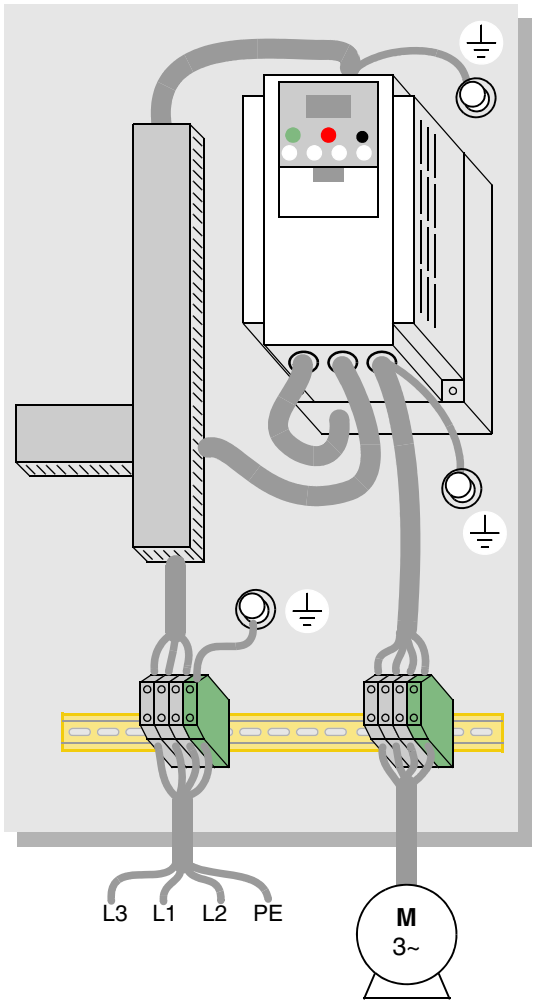

SJ300 inverter with book-type filter

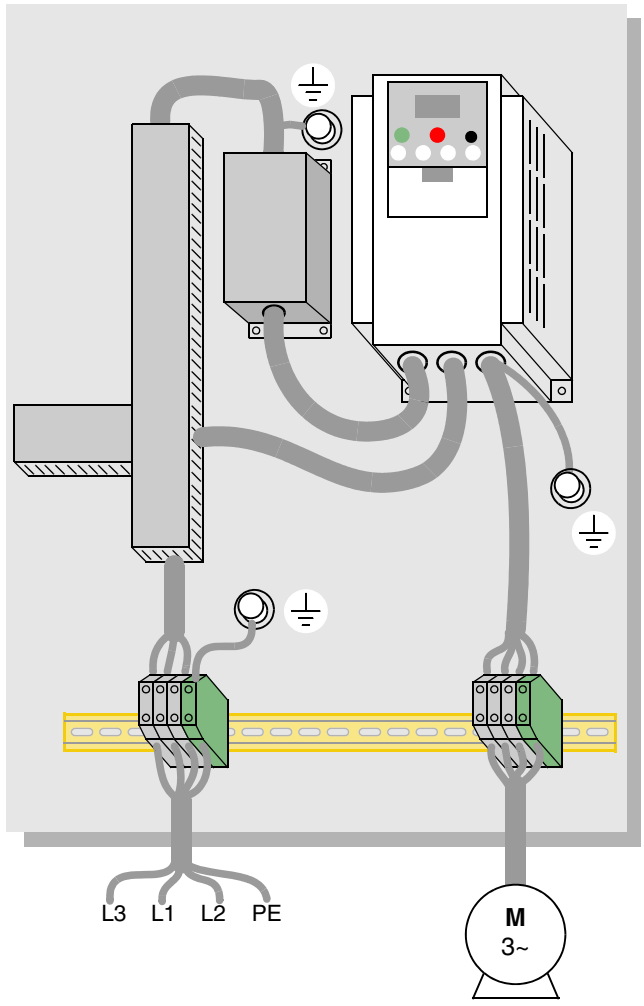

Hitachi EMC Recommendations



WARNING: This equipment should be installed, adjusted, and serviced by qualified personal familiar with construction and operation of the equipment and the hazards involved. Failure to observe this precaution could result in bodily injury.

Use the following checklist to ensure the inverter is within proper operating ranges and conditions.

1. The power supply to SJ300 inverters must meet these specifications:
   - Voltage fluctuation+/- 10% or less
   - Voltage imbalance +/- 3% or less
   - Frequency variation +/- 4% or less
   - Voltage distortion THD = 10% or less
2. Installation measure:
   - Use a filter designed for SJ300 inverter.
3. Wiring:
   - Shielded wire (screened cable) is required for motor wiring, and the length must be less than 50 meters.
   - The carrier frequency setting must be less than 5 kHz to satisfy EMC requirements.
   - Separate the power input and motor wiring from the signal/process circuit wiring.
4. Environmental conditions—when using a filter, follow these guidelines:
   - Ambient temperature: –10 to 40 °C
   - Humidity: 20 to 90% RH (non-condensing)
   - Vibration: 5.9 m/sec^2 (0.6 G) 10 ~ 55Hz, SJ300–004xxx to SJ300–220xxx
     2.94 m/sec^2 (0.3 G) 10 ~ 55Hz, SJ300–300xxx to SJ300–1500xxx
   - Location: 1000 meters or less altitude, indoors (no corrosive gas or dust)

Index

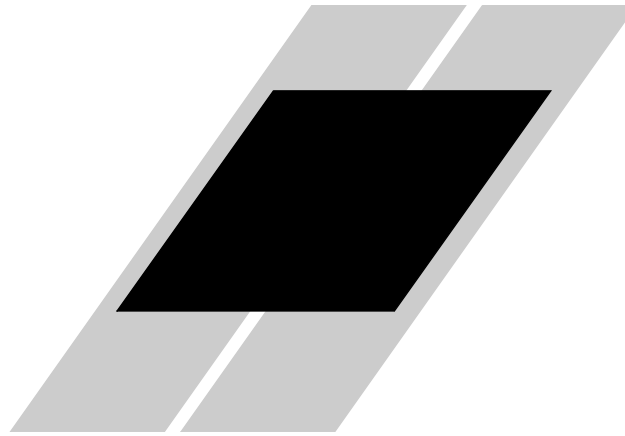

A

A Group functions 3–9
AC reactors 5–3
Acceleration 1–15, 3–8
  characteristic curves 3–26
  second function 3–24
  two-stage 4–19
Acceleration stop function 3–21
Access levels 3–5, 3–36, 4–25
Access to terminals 2–2
Accessories 5–2
Adaptive auto-tuning 4–69
Alarm signal 4–48
Algorithms 3–62
Algorithms, torque control 3–5
Ambient temperature 2–7, A–2
Analog input settings 3–11, 3–28
Analog inputs
  current/voltage select 4–26
  operation 4–59
  sampling filter 4–59
  wiring examples 4–61
Analog outputs
  FM type 4–63
  operation 4–62
  PWM type 4–62
Analog signal calibration 3–60
Anti-windmilling 3–18, 3–21
Arrival frequency A–2
ASCII code table B–18
Automatic restart 3–29
Automatic voltage regulation 3–23
Auto-tuning 4–67, A–2
  adaptive 4–69
  procedure 4–68
Auto-tuning constants 3–62
AVR 3–23

B

B Group functions 3–29
Base frequency 2–26, A–2
Bibliography A–6
Block check code B–18
Brake control, external 3–46, 4–39, 4–58
Braking 1–15
  dynamic 5–6
Braking resistor 2–5, A–2
Braking resistor selection 5–7, 5–9
Braking unit 2–5
Braking unit selection 5–8
Braking, dynamic 1–18
Break-away torque A–2

C

C Group functions 3–47
Capacitor life curve 6–12
Capacitor replacement 6–13
Carrier frequency 3–41, A–2
Catching a spinning motor 3–43, 3–61
CE approval A–2
CE-EMC guidelines D–2
Chassis ground connection 2–20
Choke 2–5, A–2
Choke, DC link 5–4
Chopper frequency 3–41
Circuit breaker sizes xiv
Clearance 2–7
Coasting 3–43, 3–61
Commercial power source switching 4–23
Communication test mode B–19
Communications 3–59
Communications protocol B–5
Communications, serial B–2
Constant torque 3–14
Constant volts/hertz operation 1–13
Control algorithms 3–14
Control gain switching 4–31
Controlled deceleration 3–40
Controlled deceleration at power loss 4–4
Cooling fan control 3–44
Copy Unit 1–3
Current overload 3–34
Current overload restriction 4–35

Call 1(800)985-6929 for Sales hitachiacdrive.com sales@hitachiacdrive.com

D

D Group parameters 3–6
DC braking 4–16, 4–17, A–2
  derating 3–19
  settings 3–18
DC link A–2
  choke 5–4
Deadband A–2
Deceleration 1–15, 3–8, 4–16
  characteristic curves 3–26
  second function 3–24
  two-stage 4–19
Default parameter values C–2
Default settings
  restoring 6–9
Derating
  DC braking 3–19
Derating curves 1–11
Derivative gain 3–22
DeviceNet 5–5
Digital operator 2–23, 3–3
  force operation 4–34
  removal 2–4
Digital operator panel A–2
Digital operators 1–3
Dimensions
  inverter 2–8
  terminals 2–16
Diode A–3
Display restriction 3–37
Droop control 4–32
Duty cycle A–3
Dynamic braking 5–6, A–3
  usage ratio 3–44, 5–6

E

Editing parameters 2–23, 2–26
  in Run Mode 3–5, 3–36, 4–25
Electromagnetic compatibility D–2
Electronic thermal overload 3–30
Elevator braking 3–46
EMC installation guidelines D–2
EMC installation recommendations D–4
EMI A–3
EMI filter 5–4
Encoder feedback 3–16
Energy savings mode 3–23
Error
  PID loop 4–47, A–3
Error codes
  programming 3–68
  trip events 6–5
Event clearing 4–27
Expansion bay 2–4
Expansion card functions 3–65
Expansion cards
  digital input 5–5
  encoder feedback 5–5
  input signals 4–41
  output signals 4–58
External brake control 4–39, 4–58
External trip 4–21

F

F Group functions 3–8
Factory settings, restoring 6–9
Fan default setting 3–44
Fan outlet 2–7, 2–20
Fan replacement 6–14
Fan unit, Filler plate 1–4
FAQ 1–17
Features 1–2, 2–2
Ferrite core 5–4
Filters
  noise suppression 5–2
Fine-tuning functions 3–29
Force operation from digital operator 4–34
Forward run command 4–12
Four-quadrant operation A–3
Free-run stop 3–43, 3–61, 4–16, 4–20, A–3
Frequency arrival signals 4–44
Frequency matching 3–43, 3–61
Frequency setting A–3
Frequency-related functions 3–20
Frequently asked questions 1–17
Functions 1–15
Fuse ratings 2–14
Fuse sizes xiv
Fuzzy logic accel/decel 3–23

G

Gain settings 4–31
Glossary of terms A–2
Grommets 2–13

H

H Group parameters 3–62
Harmonics A–3
History of trip events 3–7
Home search A–4
Horsepower A–3

Call 1(800)985-6929 for Sales hitachiacdrive.com sales@hitachiacdrive.com

Call 1(800)985-6929 for Sales hitachiacdrive.com sales@hitachiacdrive.com

I

IGBT 1–13, A–3
test method 6–17
Index of terminal functions 4–10
Inertia A–3
Initialization 6–9
Input active range 3–28
Input circuits 4–11
Input terminals 2–18
Inspection
electrical measurements 6–15
IGBT test method 6–17
measurement techniques 6–16
procedures 6–10
unpacking 2–2
Installation 2–6
Instantaneous power failure 4–51
Insulation test 6–11
Integral gain 3–22
Intelligent input terminals 3–47, 4–11
Intelligent input wiring examples 4–11
Intelligent output terminals 3–53, 4–42
Intelligent terminal functions 3–47
Intelligent terminal index 4–10
Intelligent terminals A–3
Inverter 1–17
Inverter definition A–3
Inverter specifications 1–6
Isolation transformer A–4

J

Jog command 4–16
Jog frequency settings 3–13
Jogging operation A–4
Jump frequency 3–20, A–4

K

Keypad
features 2–23, 3–3
navigation 2–25, 3–4
navigation, trip events 6–8
Keypad features 2–23
Keypads 1–3, 3–2

L

LEDs 2–23, 3–3
Line reactor A–4
Linear accel/decel 3–26
Logic connector 4–9
Logic terminals 3–47, 3–53
input wiring examples 4–11

M

Main profile parameters 3–8
Maintenance procedures 6–10
Megger test 6–11
Model number convention 1–5
Momentum A–4
Monitor mode 2–25, 2–29, 2–30, 3–4
Monitoring functions 3–6
Motor constants 3–62, 4–65
auto-tuning 4–67
manual setting of 4–70
Motor load A–4
Motor poles 2–28
Motor selection 1–18
Motor wiring 2–20
Mounting location 2–6
Multiple motors
configuration 4–72
Multi-speed operation 4–13, A–4
Multi-speed profiles 1–15
Multi-speed settings 3–13

N

Nameplate 1–5
Navigational map 2–25, 3–4
trip events 6–8
NEC A–4
NEMA A–4
NEMA compliance 2–13
NEMA rating 2–7
Noise filters 5–2
AC reactor 2–5
Noise suppression 1–18

O

Open-collector outputs 4–42, A–4
Operational modes 3–5
Operator interfaces 1–3
Optimal accel/decel 3–23
Optional components 2–5
Options 1–2
Orientation A–4
Output circuits 4–42
Output deviation for PID control 4–47
Output frequency 3–8
Output overload 3–34
Output terminals 2–20
Over-current trip 3–29
Overload advance notice signal 4–46
Overload restriction 3–34, 4–35
Over-torque signal 4–50

Call 1(800)985-6929 for Sales hitachiacdrive.com sales@hitachiacdrive.com

P

P Group functions 3–65
P/PI selection 4–31
Parameter editing 2–23, 2–26
Parameter settings tables C–2
Parameters 1–15
Phase loss 3–29
PID loop 1–18, A–4
  clearing 4–30
  error A–3
  ON/OFF 4–30
  operation 4–71
  output deviation 4–47
  process variable A–4
  setpoint A–5
  settings 3–22
PLC, connecting to 4–7
Poles 1–18
Poles of motor 2–28
Potentiometer 2–27, 4–61
Power factor A–4
Power failure 4–51
Power failure response 3–29
Power loss 4–4
Power loss response 3–40
Power source switching 4–23
Power-on time over signal 4–54
Powerup test 2–21
  observations 2–30
Powerup, unattended start 4–22
Process variable A–4
Program mode 2–25, 2–30, 3–4
Programming device 3–2
Programming error codes 3–68
Programming error monitoring 3–7
Proportional gain 3–22
Pulse-width modulation 4–62
PWM A–4

R

Ratings label 1–5
Reactance A–5
Read/write copy unit 1–3, 3–2
Rectifier A–5
Reduced torque 3–14
Regenerative braking A–5
Regulation A–5
Regulatory agency approvals 1–5
Relay alarm contacts 4–48
Remote control 4–33
Removable components 1–4
Reset function 4–27
Reset Mode 3–61
Restart Mode 3–43, 3–61
Retention screws 2–4
Reverse run command 4–12
Reverse torque A–5
Reverse U-shape accel/decel 3–26
Rotor A–5
Run command 4–12
Run mode 2–30, 3–5
Run signal 4–43
Running the motor 2–29
Run-time edits 3–5, 3–36, 4–25
Run-time signal 4–54

S

Safety messages i
Saturation voltage A–5
Second motor 4–18
Sensorless vector control 3–14, 3–16, A–5
Serial communications 3–59, B–2
Serial communications protocol B–5
Set 2nd/3rd motors 4–18
Setpoint A–5
Sigmoid accel/decel 3–26
Single-phase power A–5
Sinking I/O 4–7
Slip A–5
Software lock 3–5, 3–36, 4–25
Sourcing I/O 4–7
Spare parts 6–12
Specifications
  derating curves 1–11
  general 1–9
  logic signals 4–9
Speed control 1–13, 1–15, 4–13
Speed loop gains 4–31
Speed pot 2–27
Squirrel cage A–5
Standard functions 3–9
Start frequency A–5
Stator A–5
Stop command 4–12
Stop Mode 3–43
Supply wiring 2–18
Switching frequency 3–41
Symbol definitions i
System description 2–5

Call 1(800)985-6929 for Sales hitachiacdrive.com sales@hitachiacdrive.com

T

Tachometer A–5
Technical support 1–xviii
Term definitions A–2
Terminal block 1–4
Terminal listing 4–10
Thermal overload 3–30
Thermal protection 4–28
Thermal switch A–6
Thermal warning 4–55
Thermistor A–6
Thermistor input 4–28
Third motor 4–18
Three-phase power A–6
  motor phase connections 1–14
Three-wire interface 4–29
Torque 1–13
Torque boost 3–16
Torque control algorithms 3–5, 3–14, 3–62
  tuning 4–65
Torque limit 4–37
Torque limit signal 4–54
Torque specs, terminals 2–16
Torque, definition A–6
Transistor A–6
Trip events 3–7
  clearing 6–5
  definition A–6
  error codes 6–5
  external 4–21
  history 6–8
  monitoring 6–5
Trip history 6–8
Trip mode 4–27
Troubleshooting tips 6–3
Two-stage accel/decel 4–19

U

U Group functions 3–67
UL instructions xii
Unattended start protection 4–22
Under-voltage signal 4–51
Under-voltage trip 3–29
Unpacking 2–2
Up/Down functions 4–33
User-selectable menu functions 3–67
U-shape accel/decel 3–26

V

V/f control 3–14
V/f control setting 3–45
V/f free-setting 3–15
Variable torque 3–14
Variable-frequency drives
  introduction 1–13
Velocity profile 1–15
Ventilation 2–7, 2–20

W

Warnings
  operating procedures 4–3
Warranty 6–18
Watt loss A–6
Windmilling 3–18, 3–21
Wiring
  analog inputs 4–61
  gauge 2–14
  intelligent input wiring examples 4–11
  logic 2–20
  logic connector 4–9
  output 2–20
  power input 2–18
  preparation 2–13
  serial communications B–3
  system diagram 4–8

Z

Zero-phase reactor 5–4

Call 1(800)985-6929 for Sales hitachiacdrive.com sales@hitachiacdrive.com