Copeland Digital Scroll
Technology & Comparison With Inverter

Arup Majumdar

Global Program Director

Emerson Climate Technologies

Hong Kong

Copeland® brand products

EMERSON™ Climate Technologies

Digital Scroll Technology
Variable Capacity Output

- **VRF systems**
- **Chiller / HPs**
- **Process Chillers**
- **Dedicated HPs**
- **Rooftops**
- **Air-Driers**
- **Refrigeration Cond Units**



Digital Scroll Compressor

- **Variable Capacity Output**
- **10 – 100% Seamless Capacity**

www.digitalscroll.com

Copeland® brand products

EMERSON™ Climate Technologies

Digital OEMs/Applications

Region	Application	OEM
Asia	VRF	Samsung, Midea, Gree, McQuay, MHAQ, Johnson Control, Trane, Teco, Carrier, Blue Star, Finetec
	Process Chillers	Orion Machineries
	Ducted Res.	Actron Air, Innovative Air System
	Rooftops & Splits	Temperzone
	Chillers	Chung Hsin
Europe	Rooftops	Clivet, Lennox, Thereco
	Close Control	ENP - Liebert
	Refrigeration	Carrier, Cos, Heatcraft
USA	Rooftops	AAON, Seasons 4, Innovent, Mammoth
	VAV	AAON, Carrier
	Specialty AC	Liebert, Multistack, Applied Co., Power Systems International, Nordic Air
L America	VRF	Carrier (Midea Imported)
	Chillers	Multicontrol, Mecalor, Tosi, Climaflex
	Large Splits	Hitachi
MEA	VRF	Petra, Awal Gulf

Scroll Compressor

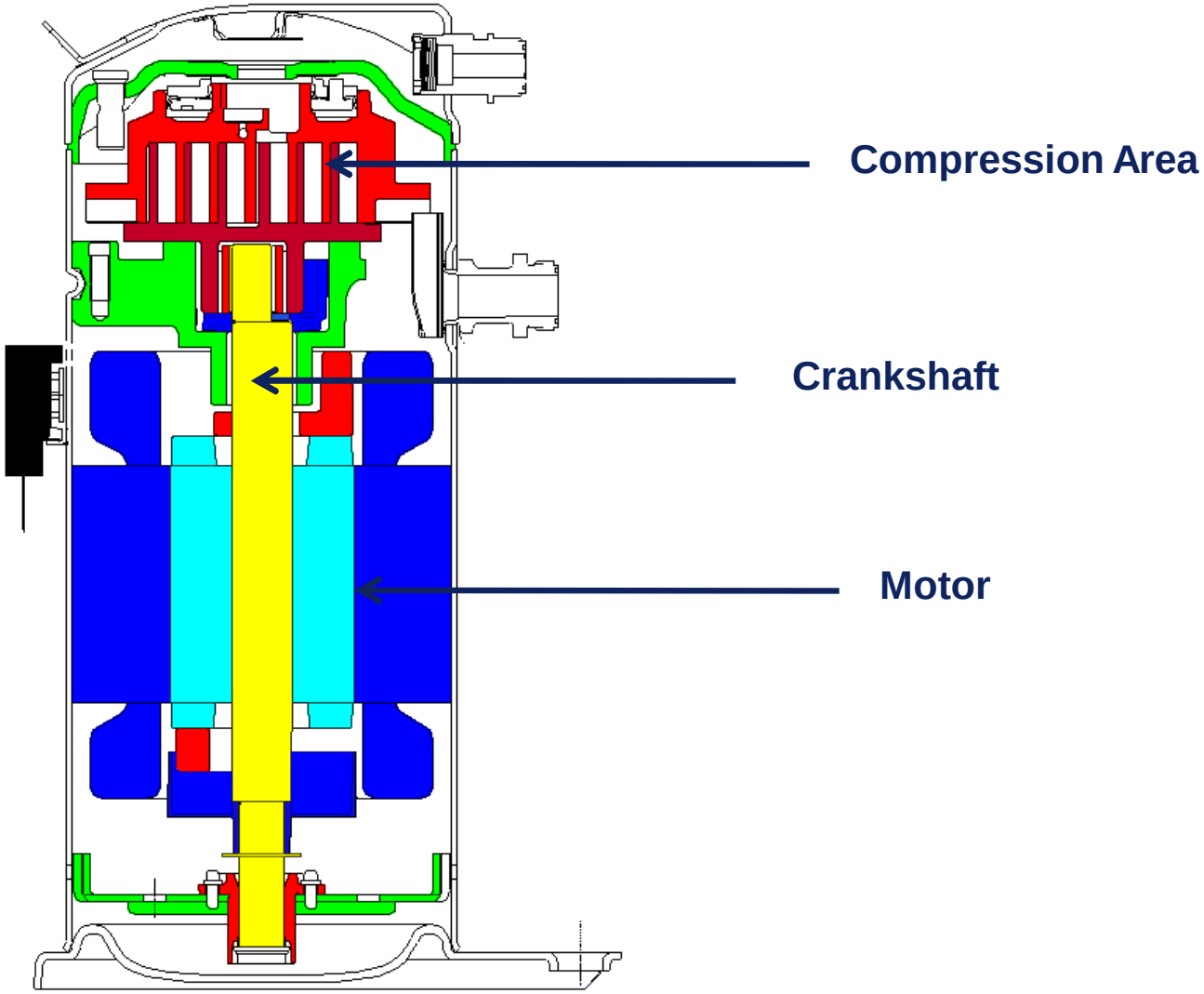

Scroll Set Profile



Comprises Two Scroll Parts

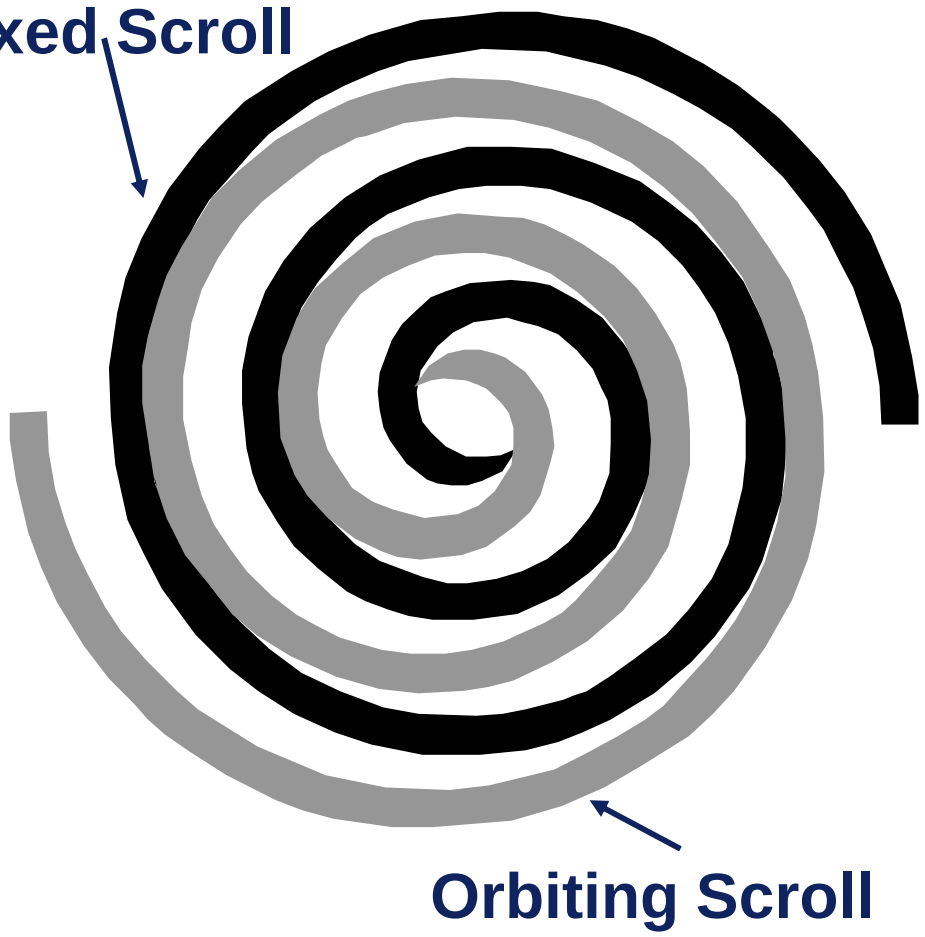

Figure 1

Figure 2

How The Scroll Compressor Works

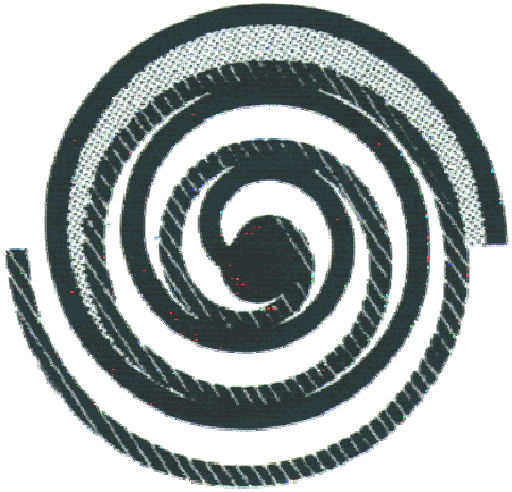

1. Gas Enters

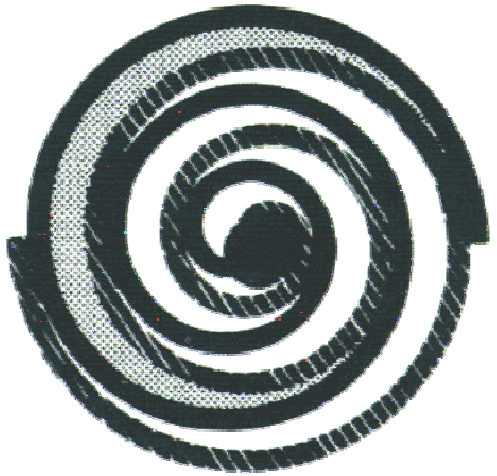

2. Open Sealed Off As
Gas Drawn Into Spirals

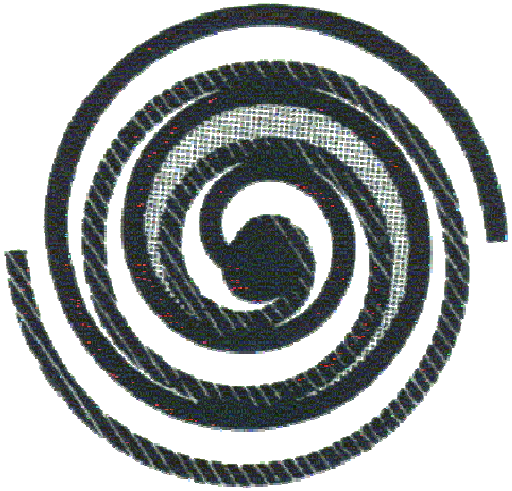

3. Gas Compressed

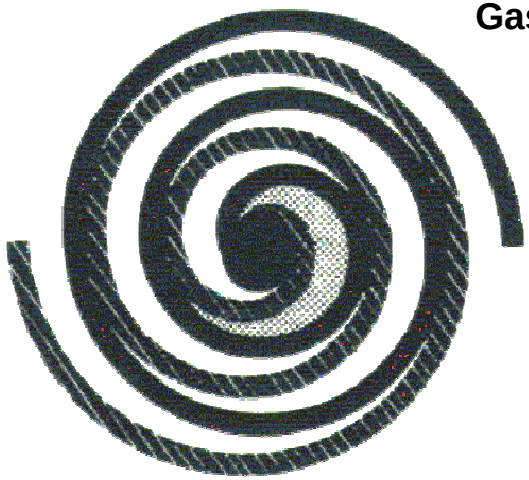

4. Discharge Pressure
Reached At Center Port

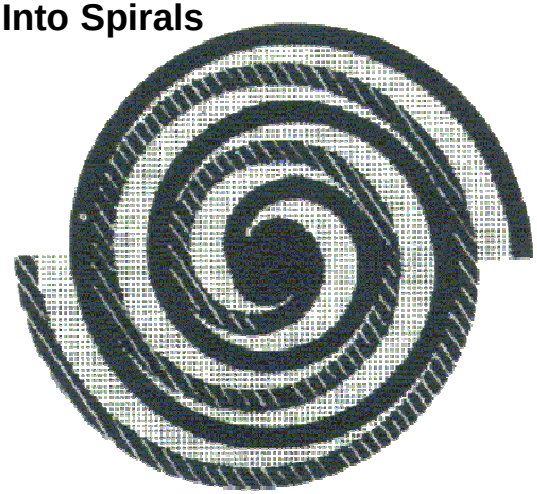

5. Continuous Suction
And Discharge

Copeland Scroll Features

1. **Low Side Design**
2. **Full Compliance (Axial And Radial)**
3. **Static Seals Vs. Dynamic Seals**
4. **DU Bearing**
5. **Built-In Protective Devices**

1. The Low-Side Design Advantage

Lower Internal Pressures & Lower Internal Temperatures

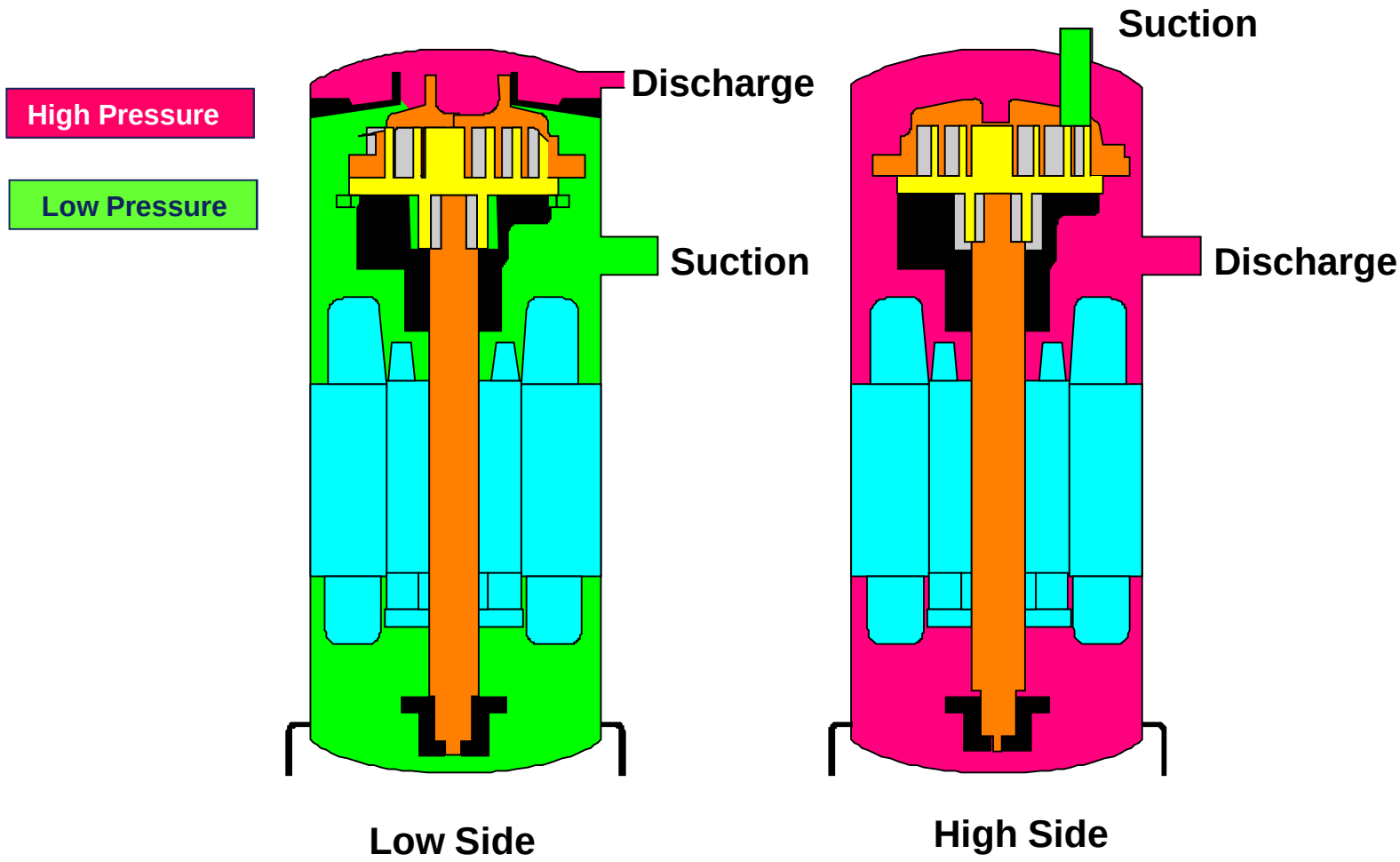

2. Radial Compliance

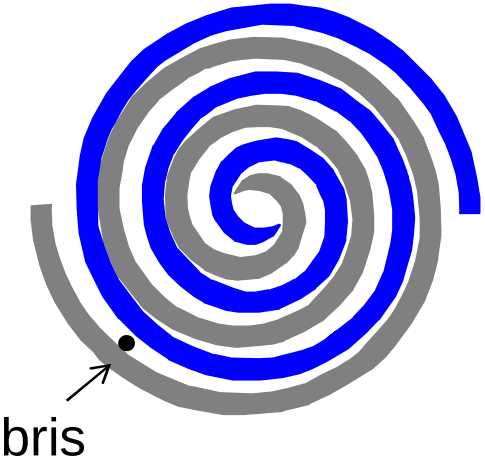

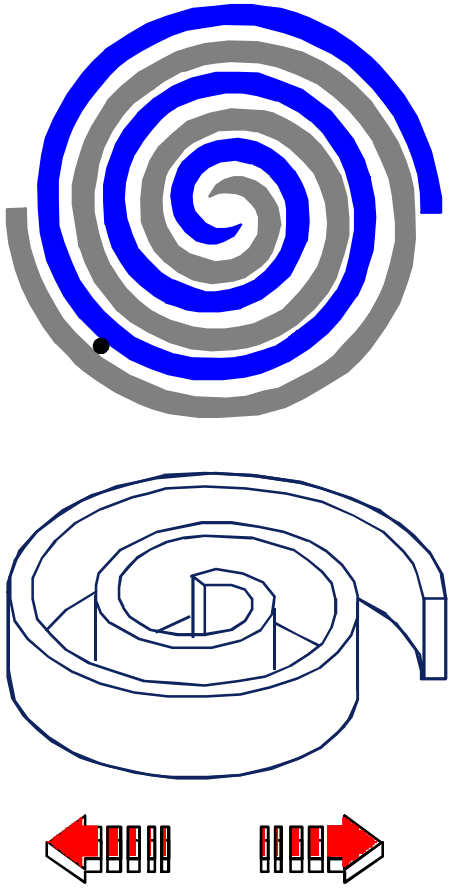

- **Ensures Scroll Contact**
- **But, Allows Scrolls To Separate Sideways**
- **So Debris And Liquid Can Pass Without Damage**

Radial Compliance

2. Axial Compliance

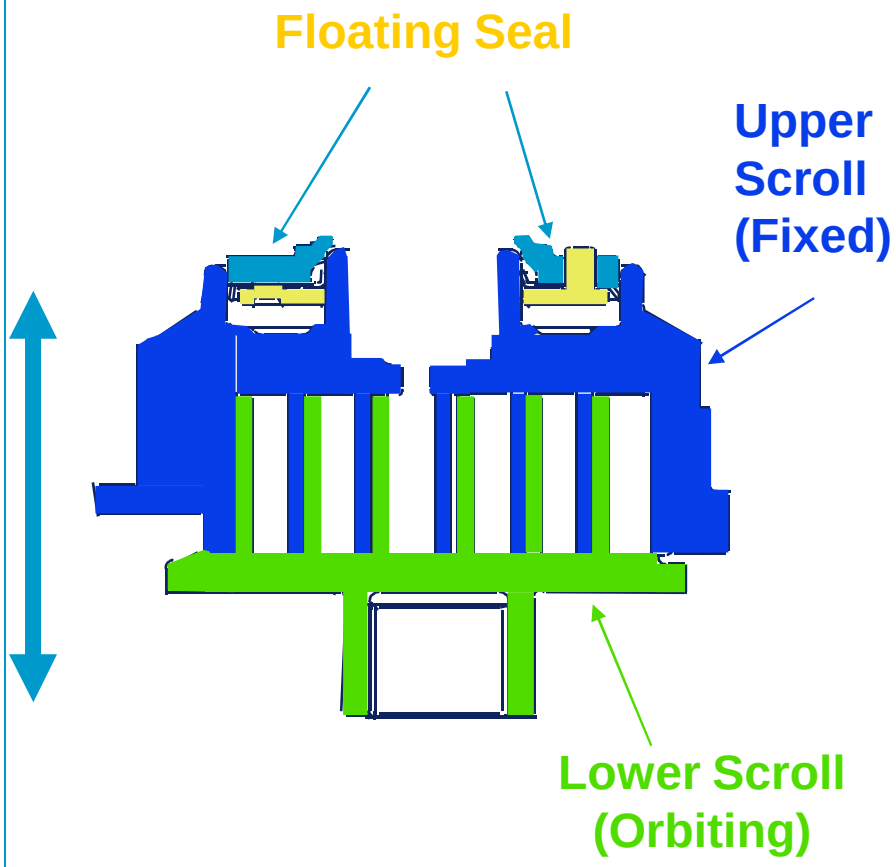

- Maintains Constant, Even Pressure On Scroll Tips
- Floating Seal Is Key
  - Optimizes Tip Loading
  - Pressure Balanced
  - Eliminates Leakage
  - Patented Design

Advantages Of Full Compliance

1. **High Efficiency**
    1. **Scrolls Wear In Rather Than Wear Out**
    2. **Less Performance Variability**
2. **Durability/Reliability Enhancement**
    1. **Better Liquid Handling**
    2. **Better Debris Handling**
    3. **No Wear Out Unlike Tip Seal Design**
3. **Low Sound Level**
    1. **Smooth Spectrum And Good Sound Quality**
4. **Unloaded Start**

3. Static Seals Vs. Dynamic Seals

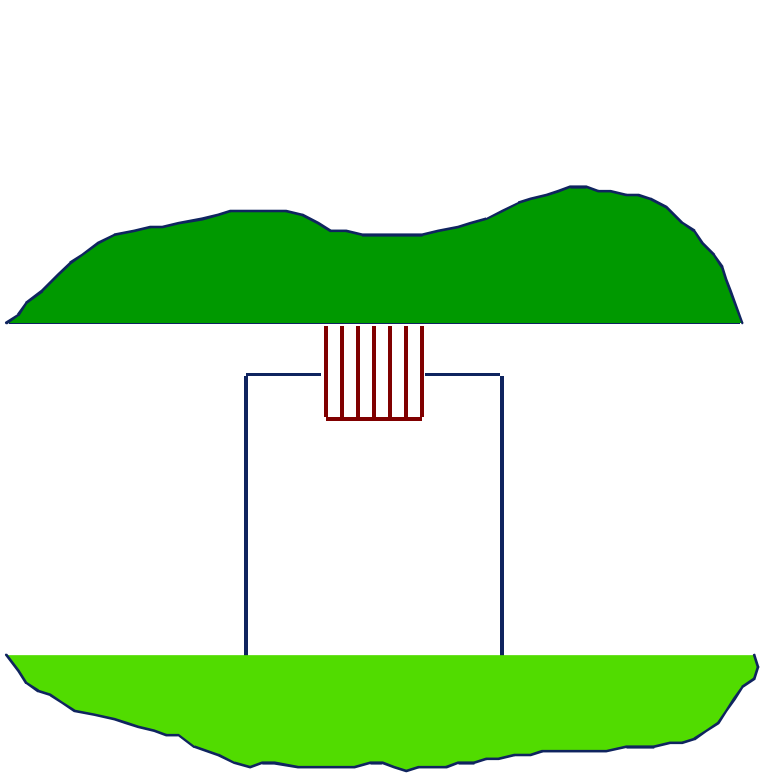

Dynamic Seal

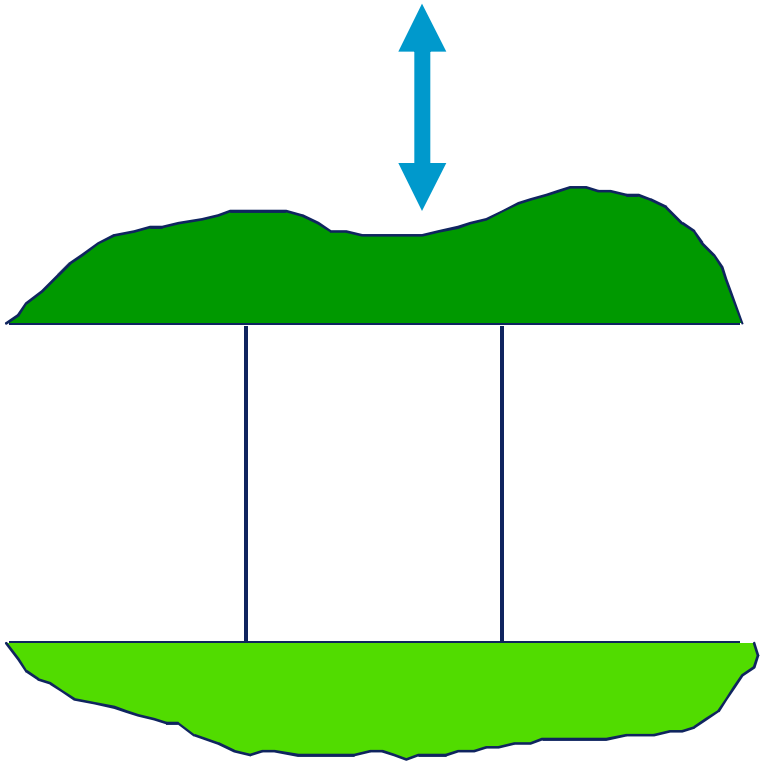

Static Seal

Static Seals Vs. Dynamic Seals

- **Dynamic Seals**
  - **Wear**
  - **Are Sensitive to Liquid and Debris**
  - **Are More Quickly Damaged By Excess Heat**
- **Static Seals**
  - **Do Not Wear**
  - **Are More Robust**

Capacity Modulation Methods

- **DC Inverter VRF**

- **Hot Gas By-pass VRF**

  - **ECO MULTI**

- **Digital Scroll VRF**

V – Variable

R – Refrigerant

F – Flow

VRF / VRV

Designing Inverter Systems
Technical Considerations

Resonant Frequency	• **Compressor Operates At Variable Speed** • **Tubing Design To Avoid Resonance** • **Test For Stress At Various Hz**
Inverter Controls	• **Additional Cost & Complexity** • **Inverter Losses**
Oil Return	• **Oil Circulation Changes With Motor Hz** • **Need Oil Separator & Oil Return Cycle**
Electromagnetic Interference	• **Fast Switching Of Electronics Emit EMI** • **Filters To Be Added To Comply EMC**
Servicing	• **Complicated System Architecture** • **Training & Knowledge Needed**

Digital Scroll Compressor
Development History

- 1993 Concept Developed
- 1995 First Prototype Developed
- 1997 Completed Concept Design
- 1997 Tested In Constant Temp /Humidity A/C
- 1999 Refrigeration Application Completed
- 1999 Started To Develop A/C Product
- 2000 Stopped Variable Speed Compressor
- 2000 Started To Supply To Samsung
- 2002 Started To Supply Rest Of Asia

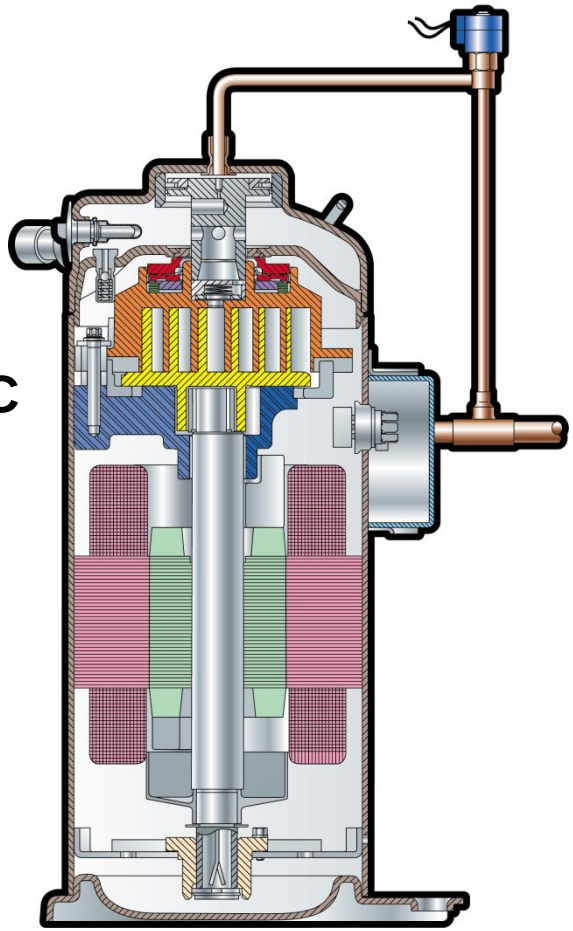

Digital Scroll Movement During Operation

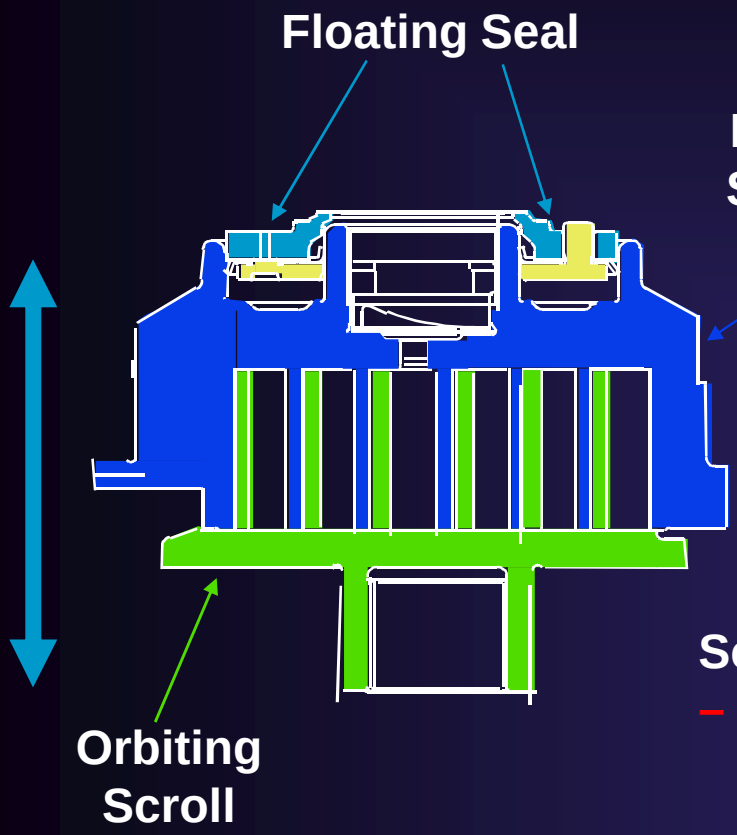



PWM Signal

Scrolls Separated
– No Pumping

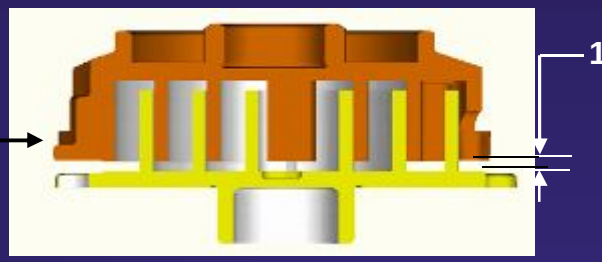

Scrolls In contact

- Pumping

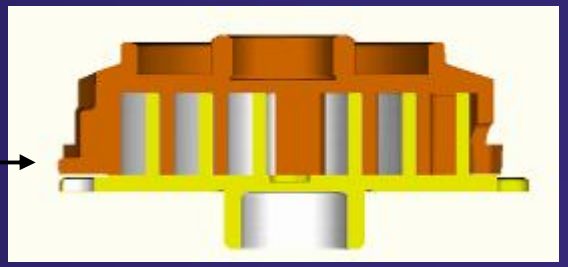

Copeland Scroll Digital™
How It Works - Animation





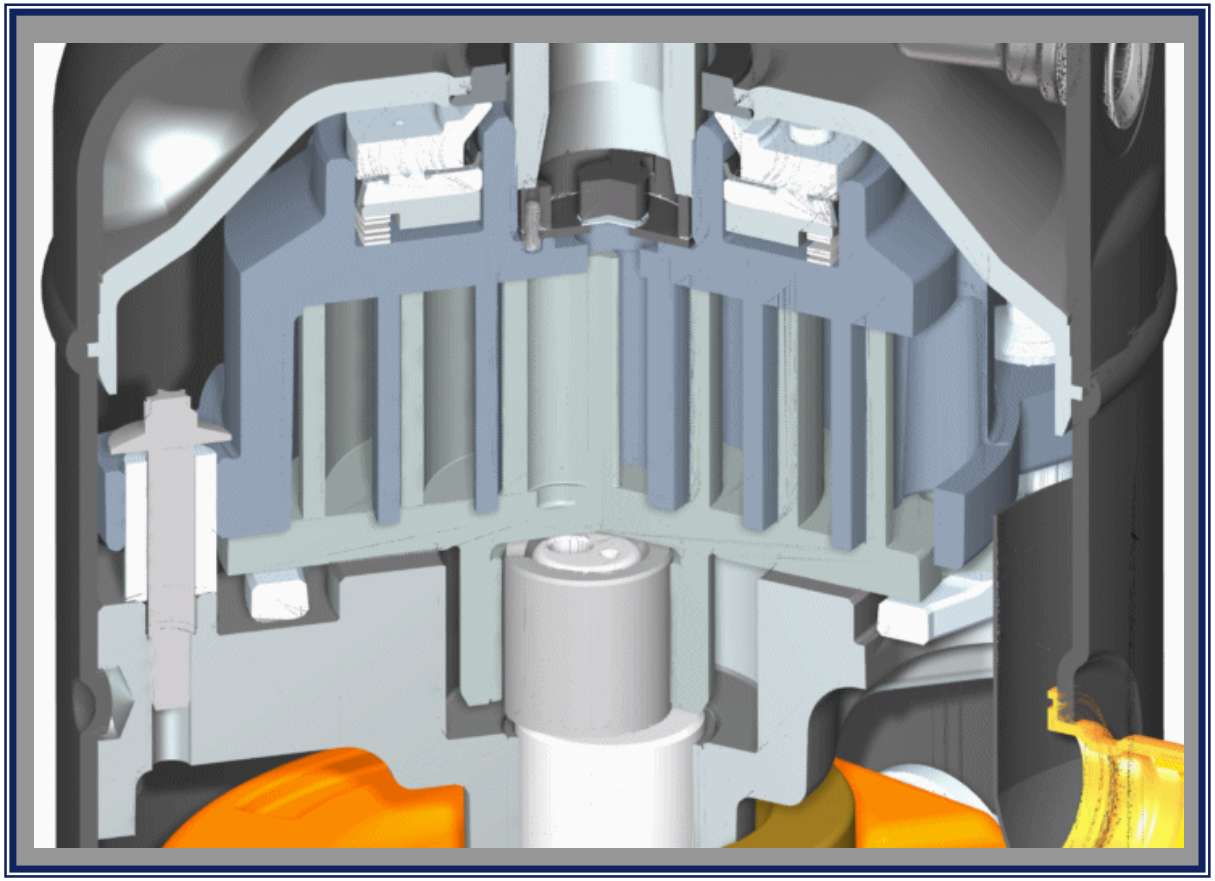

Modulation Mechanism (PWM Control)

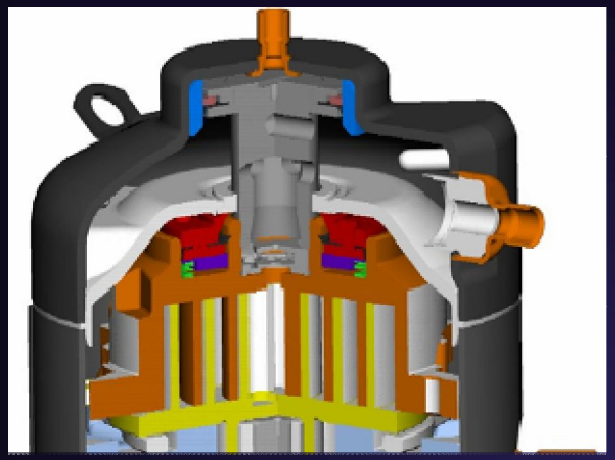

Loaded (1)

Full Capacity

Scroll Separation
1.0 mm

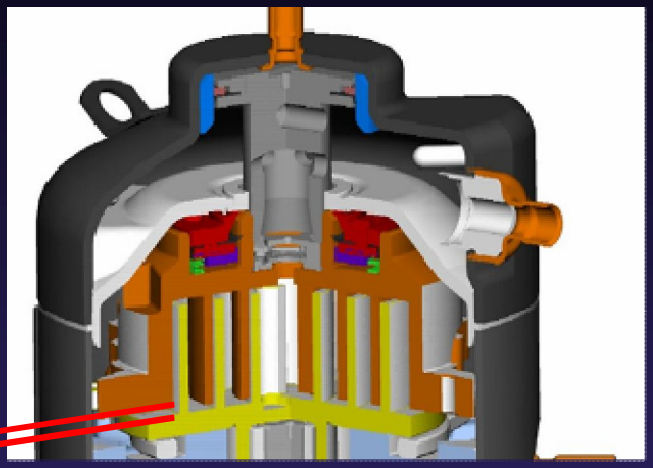

Unloaded (0)

Zero Capacity

Ex: 20% Output

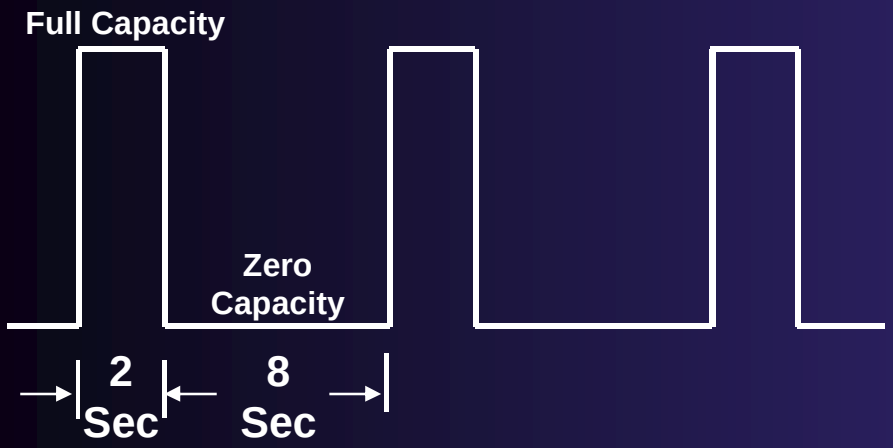

Ex: 50% Output

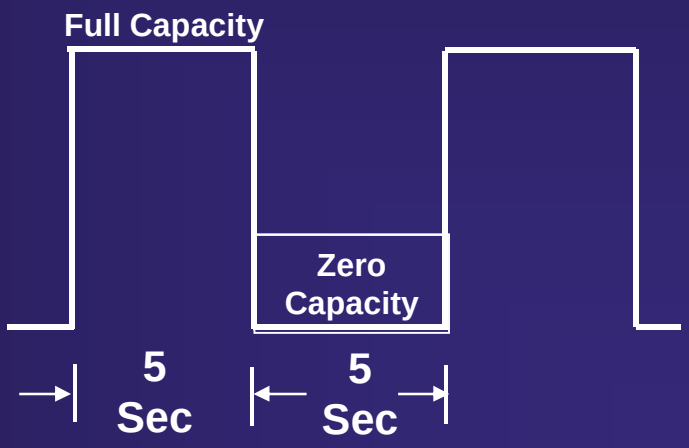

Seamless Capacity Delivery

$$\text{Capacity} = \frac{(\text{Loaded Time} \times 100\% + \cancel{\text{Unloaded Time} \times 0\%})}{\text{Total Time}}$$

Example: Cycle Time = 10 Seconds

Capacity	Loaded Time
10%	1.0 Second
11%	1.1 Second
12%	1.2 Second
…	
…	
25%	2.5 Second
…	
50%	5.0 Seconds
…	
90%	9.0 Seconds

Partial Load performance – Digital Scroll

Snap Shot of Actual Calorimeter Test

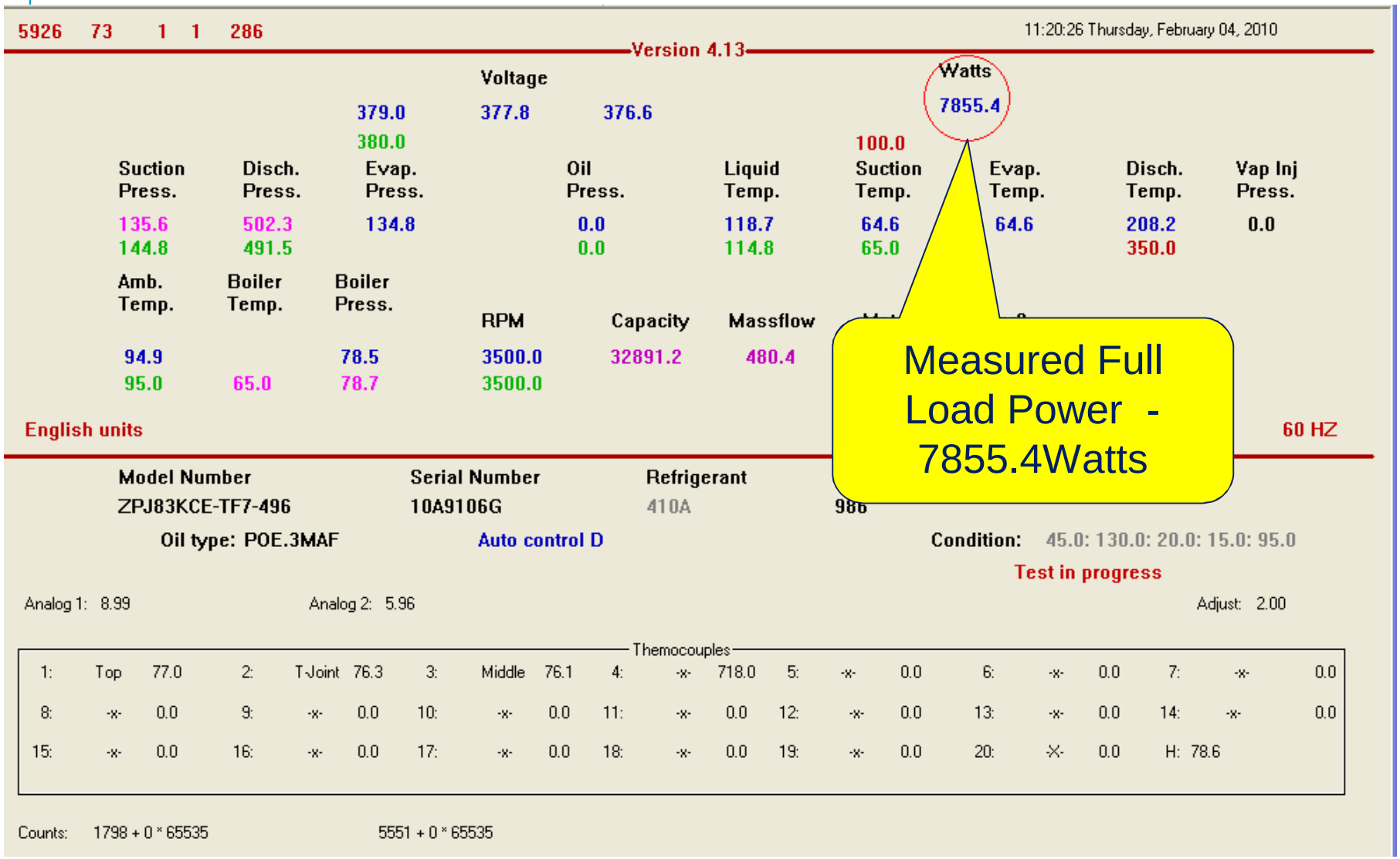

Partial Load performance – Digital Scroll

Snap Shot of Actual Calorimeter Test

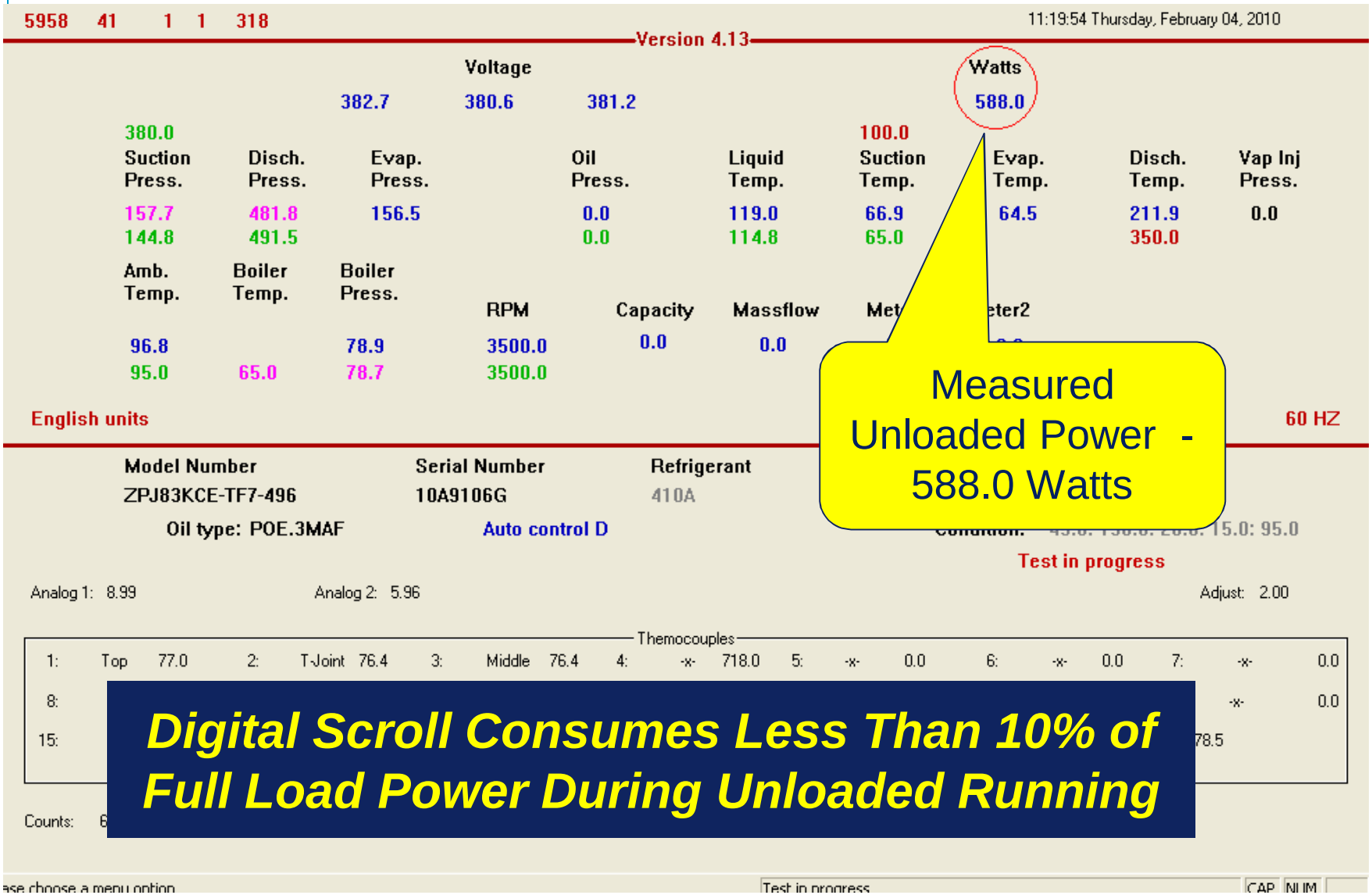

Comparison - Digital Scroll vs Inverter

1. Design Features
2. Operating Envelope
3. Energy Efficiency
4. Speed of Response
5. Precise Load Matching
6. Simplicity
7. Reliability
8. Electromagnetic Interference

1. Design Features

Digital Scroll vs Inverter

Copeland® brand products

EMERSON™ Climate Technologies

The Low-Side Design Advantage

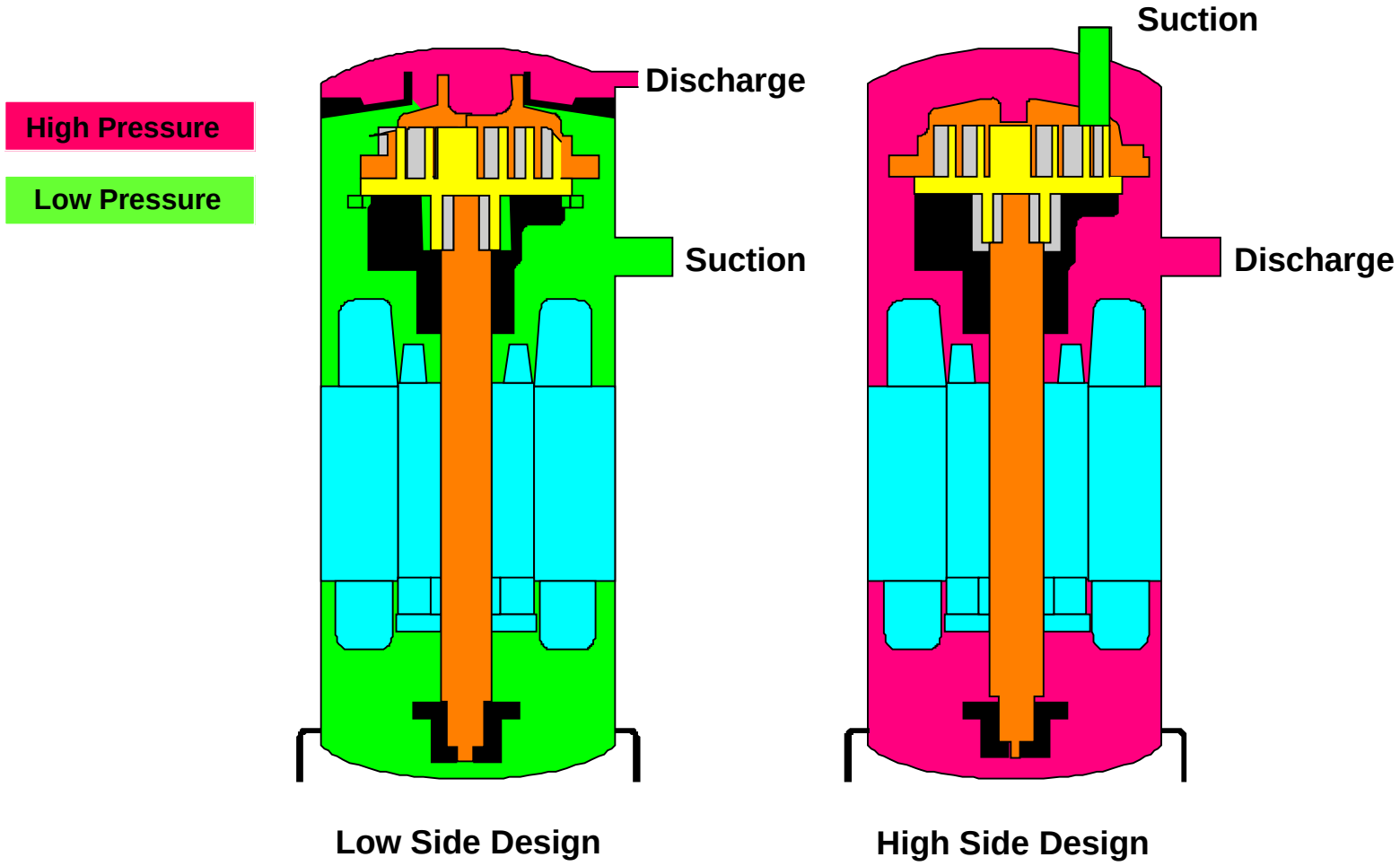

Lower Internal Pressures & Lower Internal Temperatures

Low Side Vs High Side Differences

	Copeland Low Side		D Brand High Side		Impact
Hot Surface	Top Cap	✓	Entire Shell		Safety, Wiring
Internal Pressure	Low	✓	High		Reliability
Internal Temperature	Low	✓	High		Reliability
Start	Quick Cooling	✓	Slow Cooling		Discharge Gas Condenses During Start-up
Restart	Immediate	✓	Immediate	✓	
Oil Pump Out Rate	Low	✓	High		Lub Oil & Ref Easily Mix In High Temp
Refrigerant Charge Limit	As Needed (10lbs)*	✓	3.3lbs (Actual) 5.5lbs (Rated)		Additional Accumulator, Crankcase Heater
Handle Liquid/Debris	Excellent	✓	Average		Reliability – Liquid & Debris Enter Scroll Directly

* 5HP Refrigerant Charge Example

2. Operating Envelope

Digital Scroll vs Inverter

Copeland® brand products

EMERSON™ Climate Technologies

Digital Scroll Operating Envelope

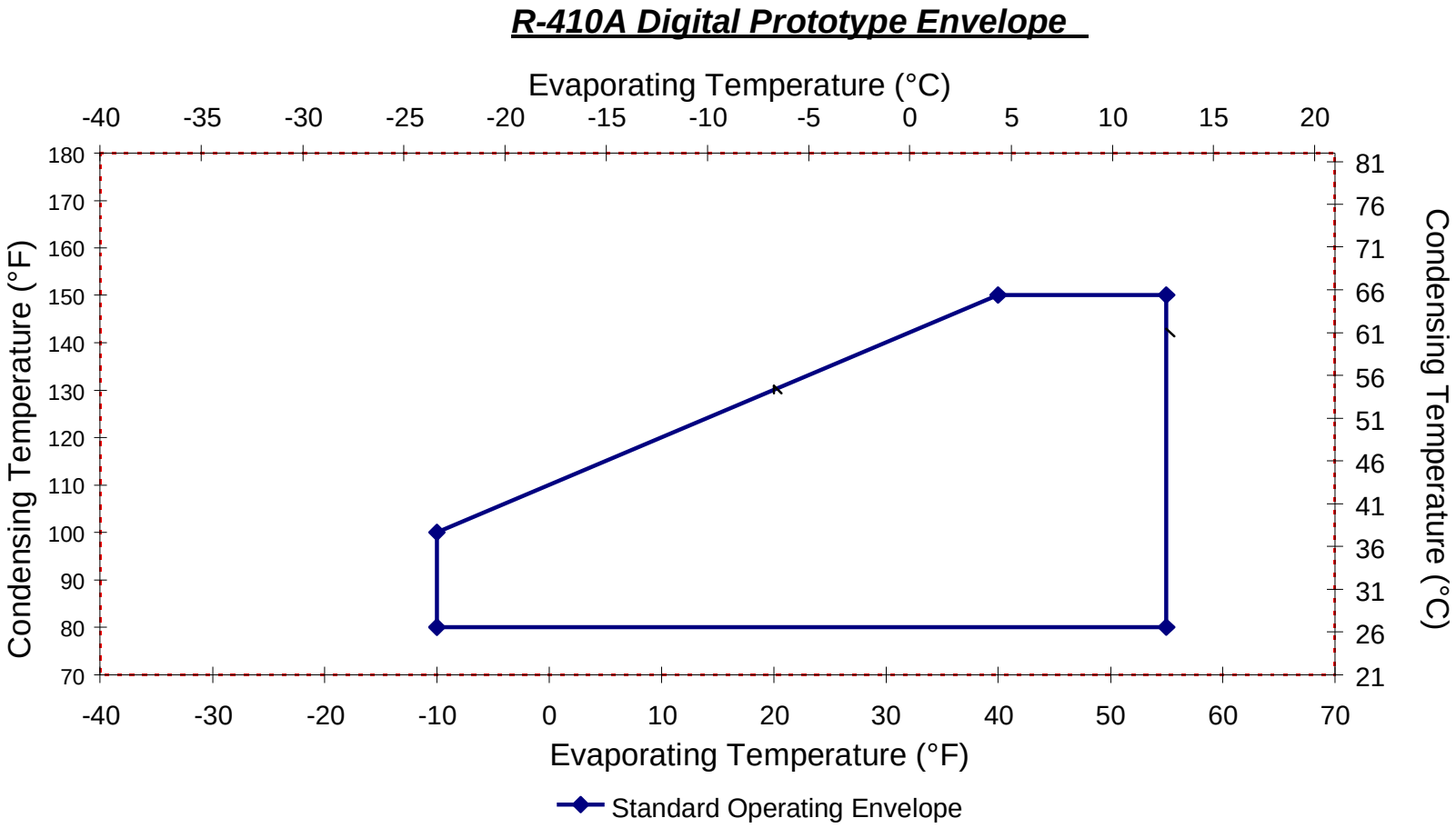

Typical Inverter Scroll Operating Envelope

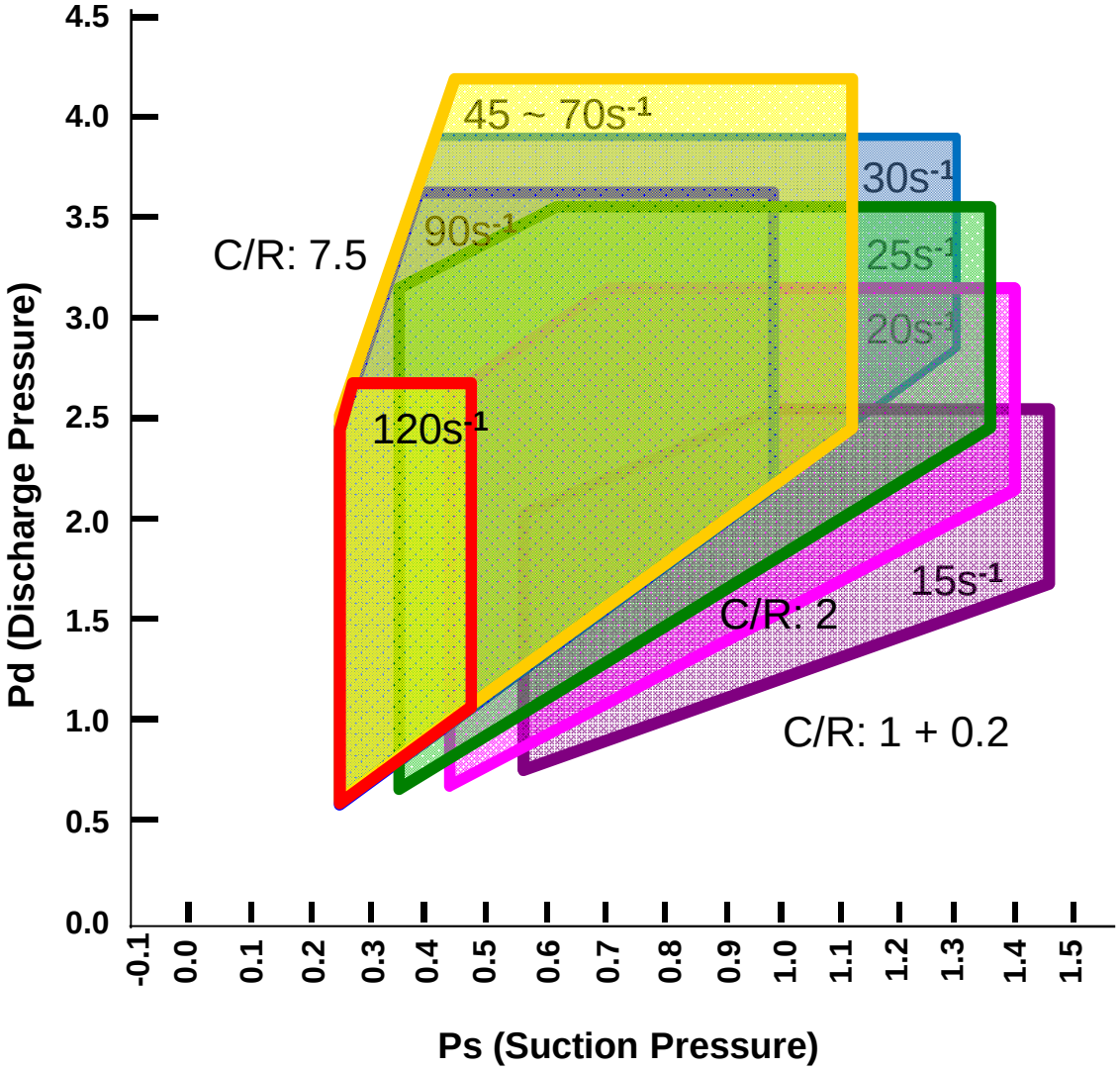

Compressor Test Report

Inverter Scroll + Fixed Speed (10HP) - Cooling

Standard Cooling		High ambient Cooling	
ID:27C ° /19 ° C; OD:35C °		ID:32 ° C/23 ° C; OD:43C ° (GB)	
Capacity, W	22,794	Capacity, W	19,906
EER	2.12	EER	2.11
Speed, rpm	4,860	Speed, rpm	2,820
Suc./Disc Presssure, MPa	0.8/2.97	Suc./Disc Presssure, MPa	1.03/3.38
Suc./Disc Temp,C	10.4/76.3	Suc./Disc Temp,C	19.6/81

 # Rated Cooling Capacity: 28,000W
 # Due To The Discharge Pressure Limit, DC Inverter System Has To Slow Down To Protect The Compressor, Cause Sharp Dropping In The Cooling Capacity At High Ambient Temperature

Compressor Test Report

Twin Inverter Rotary(10HP) - Cooling

ID:27 ° C/19 ° C; OD:35 ° C		ID:32 ° C/23 ° C; OD:43 ° C (GB)	
Capacity, W	25231	Capacity, W	15684
EER	2.28	EER	3.02
Speed, rpm	4500/4680	Speed, rpm	2100/2100
Suc./Disc Presssure,MPa	0.72/2.86	Suc./Disc Presssure,MPa	1.11/3.07
Suc./Disc Temp, ° C	10.6/93.4	Suc./Disc Temp, ° C	21.4/79.8

 # Rated Cooling Capacity: 28,000W
 # Due To The Discharge Pressure Limit, DC Inverter System Has To Slow Down To Protect The Compressor, Cause Sharp Dropping In The Cooling Capacity At High Ambient Temperature

3. Energy Efficiency

Digital Scroll vs Inverter

Copeland® brand products

EMERSON™ Climate Technologies

Compressor Efficiency Measures - COP

Evap T / CondT	-20.0	-15.0	-10.0	-5.0	0.0	5.0	7.0	10.0	12.5
				COP					
25.0	2.72	3.45	4.29	5.25	6.38	7.71	8.31	9.29	10.19
30.0	2.20	2.85	3.58	4.43	5.41	6.58	7.11	7.97	8.76
35.0	1.76	2.34	2.99	3.73	4.59	5.61	6.07	6.82	7.52
40.0	1.38	1.91	2.48	3.13	3.88	4.76	5.16	5.82	6.42
45.0		1.52	2.03	2.59	3.25	4.01	4.36	4.92	5.44
50.0			1.63	2.12	2.69	3.34	3.64	4.12	4.56
55.0				1.70	2.19	2.75	3.00	3.41	3.79
60.0					1.75	2.23	2.44	2.79	3.10
65.0						1.77	1.95	2.24	2.50

- **COP Of The System Is Heavily Dependent On Compressor COP**
- **Compressor COP Is A Function Of Evaporating & Condensing T**
- **Lower Condensing Temperature Helps Reduce Input Power**
- **Higher Evaporating Temperatures Help Improve Capacity**

COP Is Condition Dependant

Compressor Efficiency Measures
COP vs IPLV

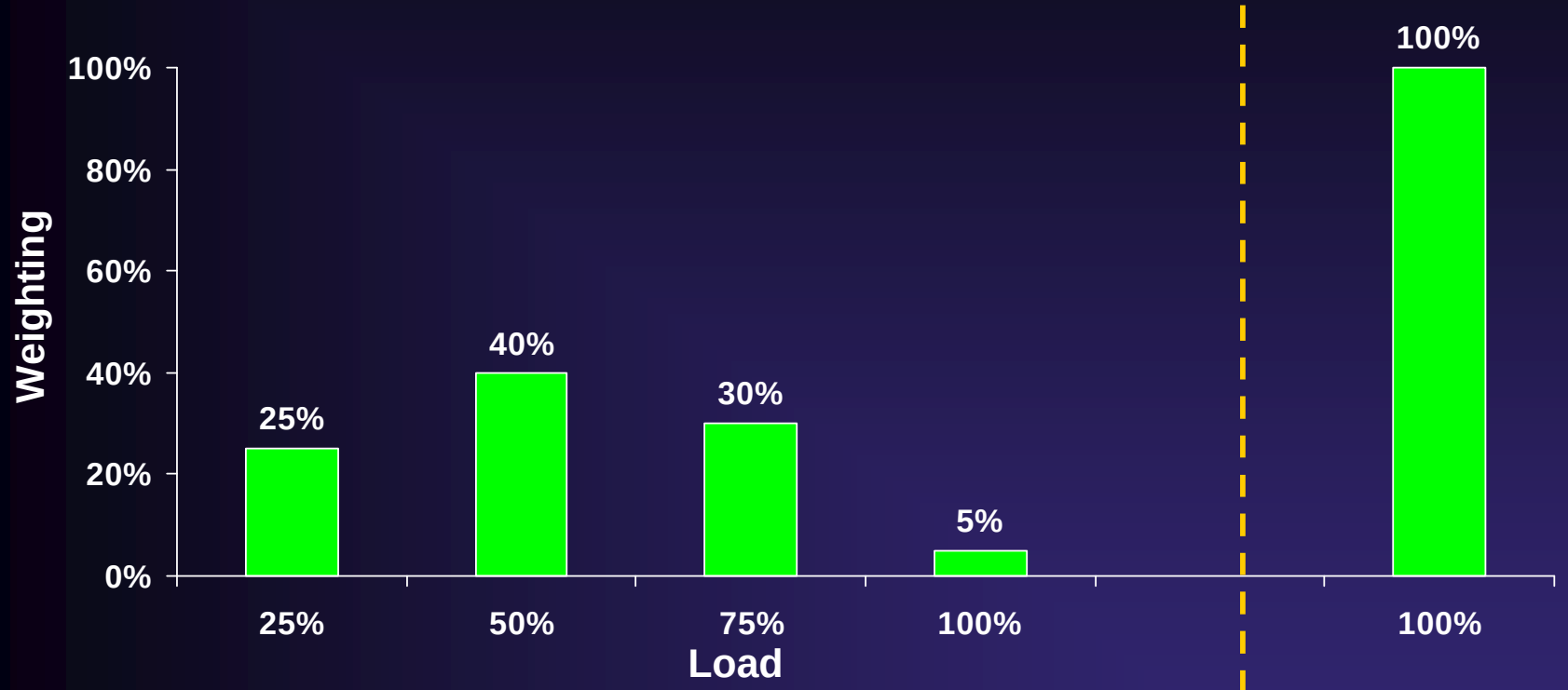

	IPLV (Integrated Part Load Value)	COP / EER
For A/C System type	Variable Capacity	Fixed Speed
Weighting	Close To Actual Usage	100% Load Only

IPLV is the Standard Measure for Variable Capacity

Performance: Digital Scroll & DC Inverter

Testing Results At China Govt. Laboratory At Hefei

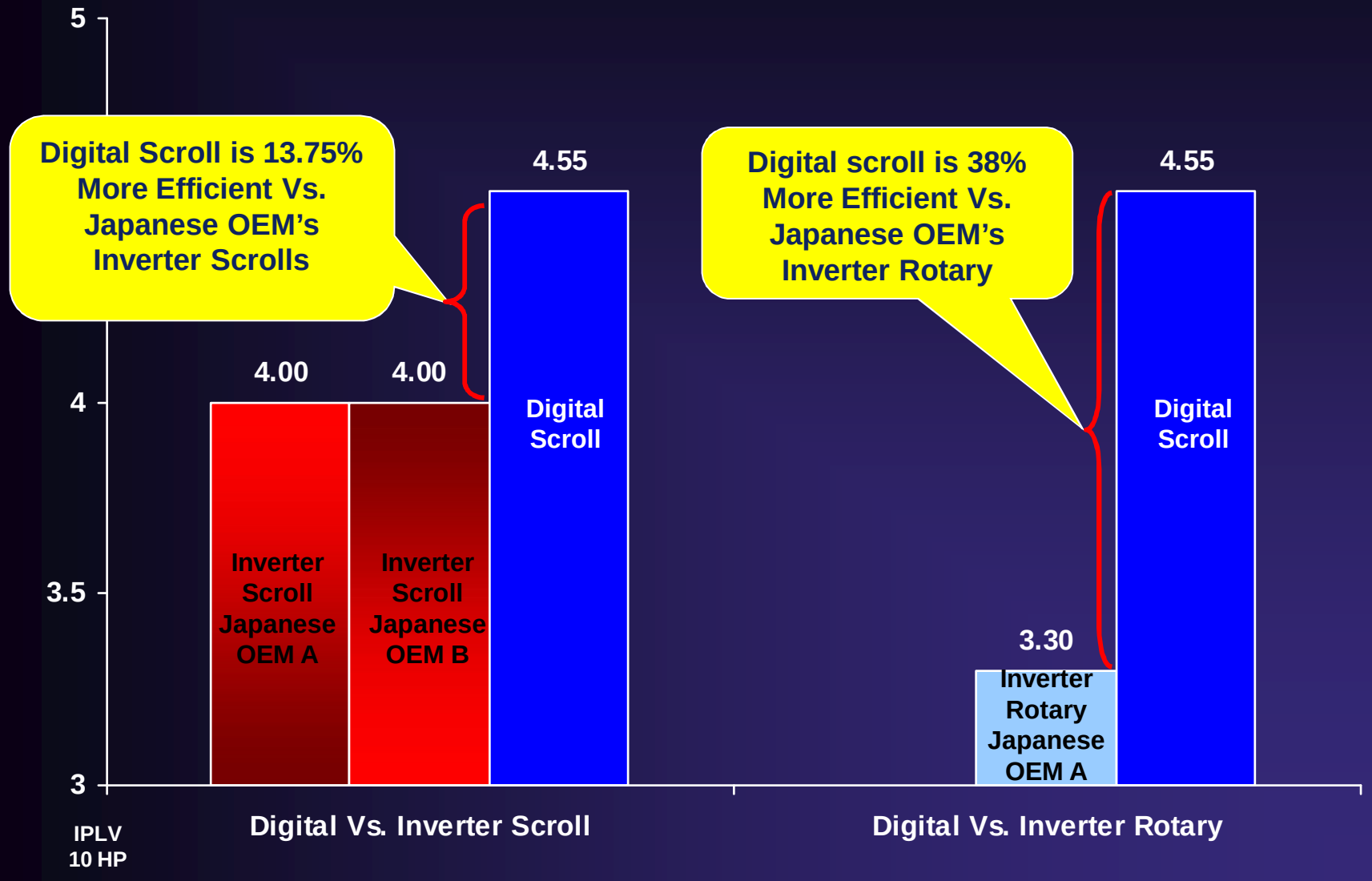

Digital Scroll Data: Tested & Published
IPLV Of 4.55 (Highest In Industry)

中国能效标识网
www.energylabel.gov.cn

首 页 | 新闻动态 | 政策法规 | 能效标准 | 资源与环境标准化 | 消费指南 | 下载专区 | 网上备案 | 产品备案信息公告 | 实验室备案公告 | 联系我们

>>当前位置：首页 / 多联式空调（热泵）机组 / RVXVHT100GF

全站搜索： 文章标题 搜索

RVXVHT100GF

RVXVHT100GF

Released time:
发布日期：2009-2-25

RVXVHT100GF

Type:
型号： RVXVHT100GF

Record Number:
备案号： 2009-12-757-53054

Energy Efficiency Grade:
能效等级： 1

Released time:
备案公布时间： 2009-2-25

Product Categories:
所属产品类别： 多联式空调（热泵）机组

VRF AC (heat pump) unit

Manufacturer:
生产者： 苏州三星电子有限公司

Record details
备案详细：

额定制冷量： 28000 — Normal Cooling Capacity:

制冷消耗功率： 8880 — Cooling Power Consumption

制冷综合性能系数： 4.55 — IPLV(C):

HEFEI Inspection Report

合肥通用机电产品检测院
Hefei General Machinery & Electrical Products Inspection Institute
国家压缩机制冷设备质量监督检验中心
National Quality Supervision and Inspection Centre of Compressor and Refrigerator Products
检 验 报 告
Inspection Report

№ 2008LK183 共 5 页 第 5 页 Page 5 of 5 pages

检验结果（附表） 检验日期：2008 年 03 月 07 日
Inspection results Date of Test: Mar. 07, 2008

检验项目 Inspection item	单位 Unit	铭牌参数 Nameplate parameter	标准规定技术要求 Technical requirements specified in the Standard	检验数据 Inspected data	单项评价 Single-item evaluation
制冷综合性能系数 Refrigerating integrated part load value	W/W	/	≥2.80	4.55	合格

备注（Remarks）：
1. 制冷部分负荷实测工况：

100%负荷实测工况	室内侧	干球温度 27.02℃，湿球温度 19.02℃ 出风静压 30Pa
	室外侧	干球温度 27.03℃
75%负荷实测工况	室内侧	干球温度 27.03℃，湿球温度 19.03℃ 出风静压 30Pa
	室外侧	干球温度 27.05℃
50%负荷实测工况	室内侧	干球温度 27.03℃，湿球温度 19.02℃ 出风静压 30Pa
	室外侧	干球温度 27.05℃
25%负荷实测工况	室内侧	干球温度 27.07℃，湿球温度 19.04℃ 出风静压 30Pa
	室外侧	干球温度 27.06℃

Part Load Testing Conditions

100%
75%
50%
25%

Screenshot – China Energy Labeling Website
http://test.energylabel.govcn/

4. Speed of Response

Digital Scroll vs Inverter

Copeland® brand products

EMERSON™ Climate Technologies

Inverter Controls - Some Truths

Freq Steps for a Japanese OEM's Actual Inverter

STEP No.	INV
1	52 Hz
2	56 Hz
3	62 Hz
4	68 Hz
5	74 Hz
6	80 Hz
7	88 Hz
8	96 Hz
9	104 Hz
10	110 Hz
11	116 Hz
12	124 Hz
13	132 Hz
14	144 Hz
15	158 Hz
16	166 Hz
17	176 Hz
18	188 Hz

Minimum Hz

Hz for "Rated" capacity

- **Inverter controls Hz step by Step**
- **These step changes are not linear**
- **The capacity delivered at lowest Hz is almost 33%**
- **Hot Gas By Pass Is Required To Deliver Lower Capacity Than 33%**

If An Inverter operates linearly, a range of "Resonance Frequencies" will result in Reliability And Noise Problems forcing the Inverter manufacturers to have uneven steps

Does Inverter Control The Hz Linearly?

Answer Is NO

Digital Scroll			Inverter		
Load / unload cycle times	2 / 18	10 % Capacity	52	Delta Hz	33% Capacity
	2.2 / 17.8	11% capacity	56	4	35% Capacity
	2.4 / 17.6	12% capacity	62	6	39% Capacity
	2.6 / 17.4	,,	68	6	43% Capacity
	2.8 / 17.2	,,	74	6	47 % Capacity
	3 / 17	Step less Capacity Control from 10 -100%	80	6	51% Capacity
	3.2 / 16.8		88	8	55% Capacity
	3.4 / 16.6		96	8	61%Capacity
	3.6 / 16.4		104	8	66% Capacity
	3.8 / 16.2		110	6	69% Capacity
	4 / 16		116	6	73%Capacity
	..		124	8	78% Capacity
	..		132	8	83%Capacity
	..		144	12	91% Capacity
	..		158	14	100% Capacity
	..		166	8	105 %Capacity
	19.4 / 0.6	97% capacity	176	10	113% Capacity
	19.6 / 0.4	98% Capacity	188	12	119% Capacity
	19.8 / 0.2	99% Capacity	202	14	127 % Capacity
	20 / 0	100% Capacity	210	8	133%Capacity

Inverter Frequency Steps

Irregular Frequency Steps Lead To Non Linear Capacity Control in Inverters

Does Inverter Control Capacity Linearly?

Answer Is NO

Digital Scroll Compressor

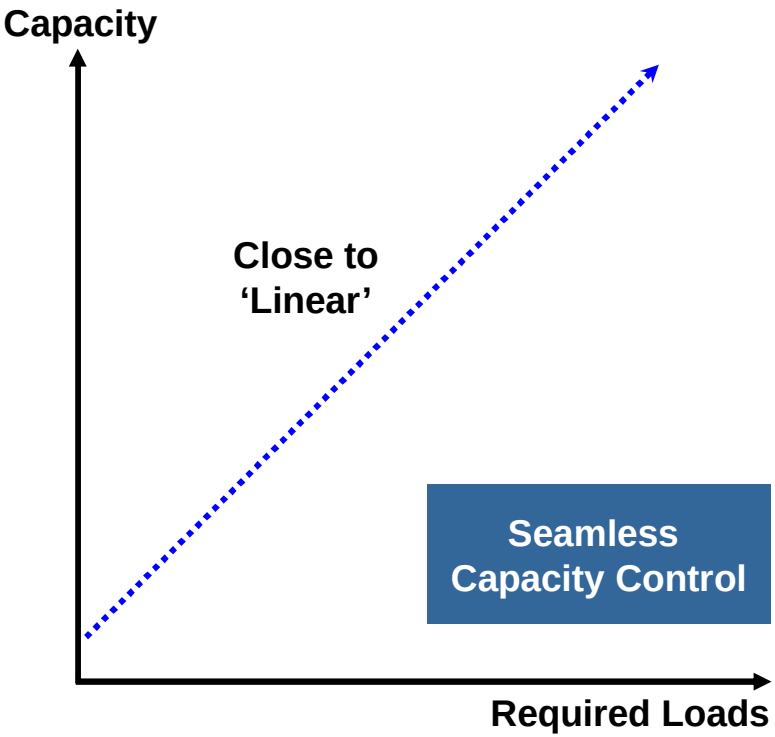

Quickly converge to the target load

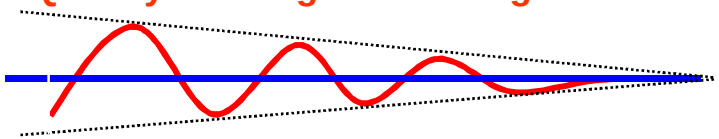

Inverter Scroll Compressor

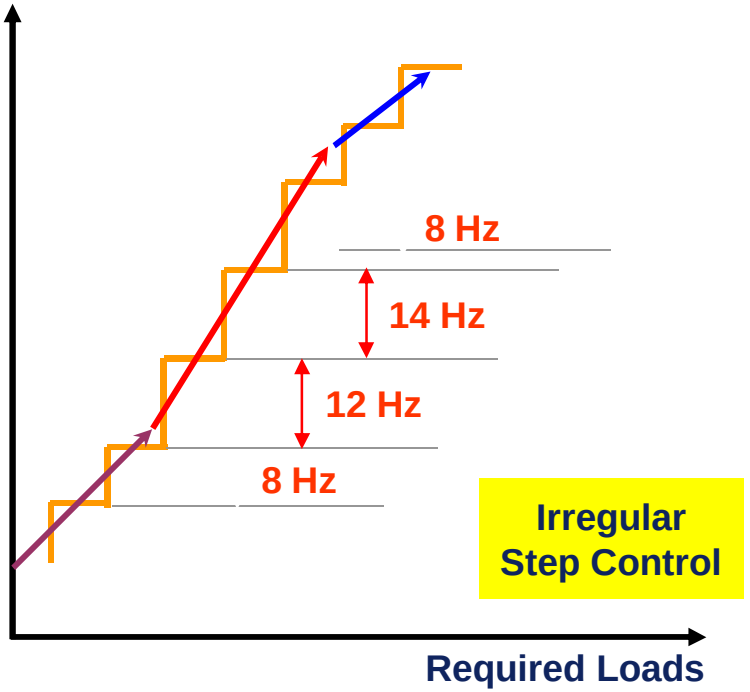

5. Precise Load Matching

Digital Scroll vs Inverter

Copeland® brand products

EMERSON™ Climate Technologies

Digital Scroll : Capacity Output Range

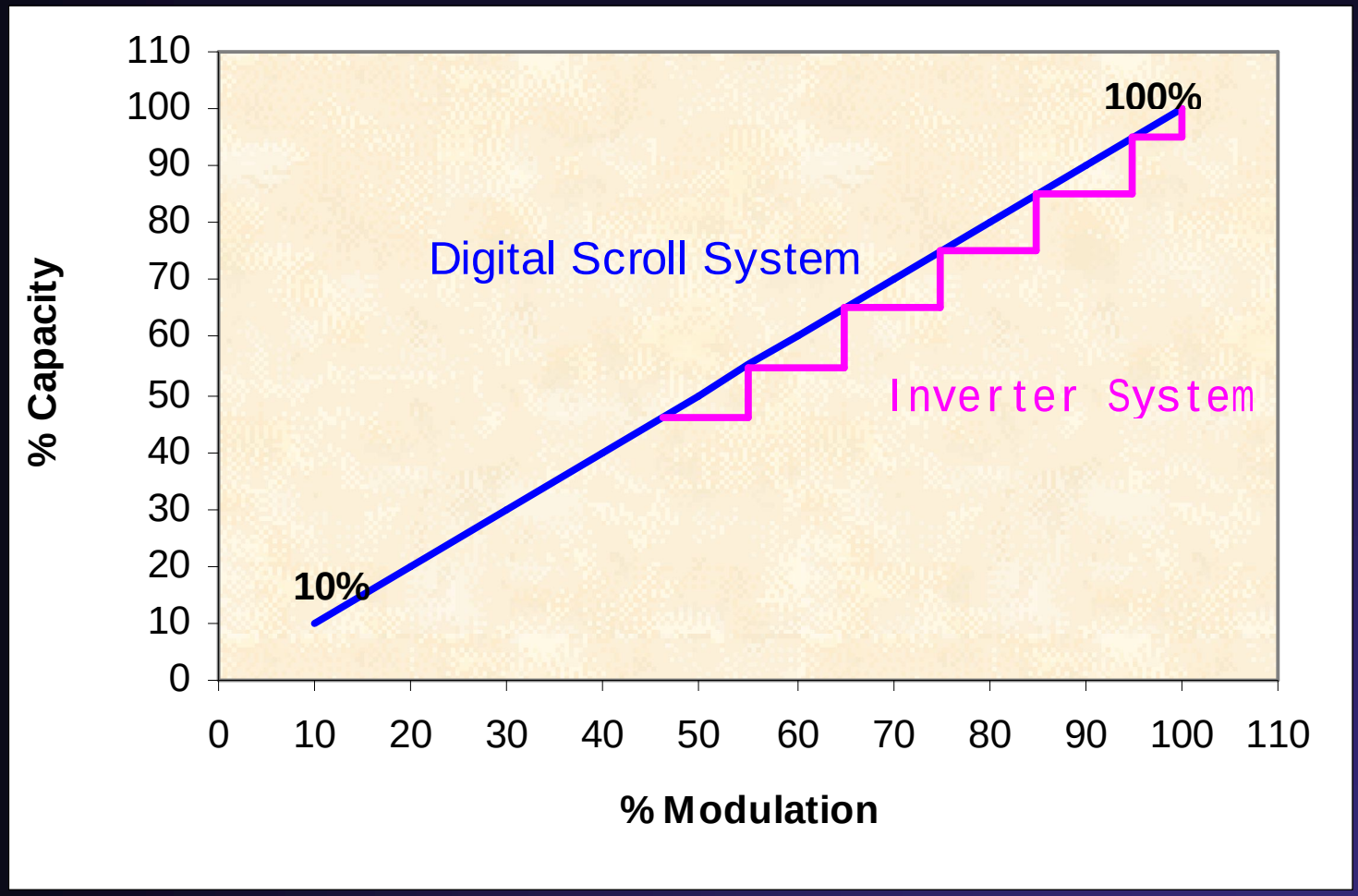

Load Matching

Different Sizes Of Compressors
Widest Capacity Range 10-100%

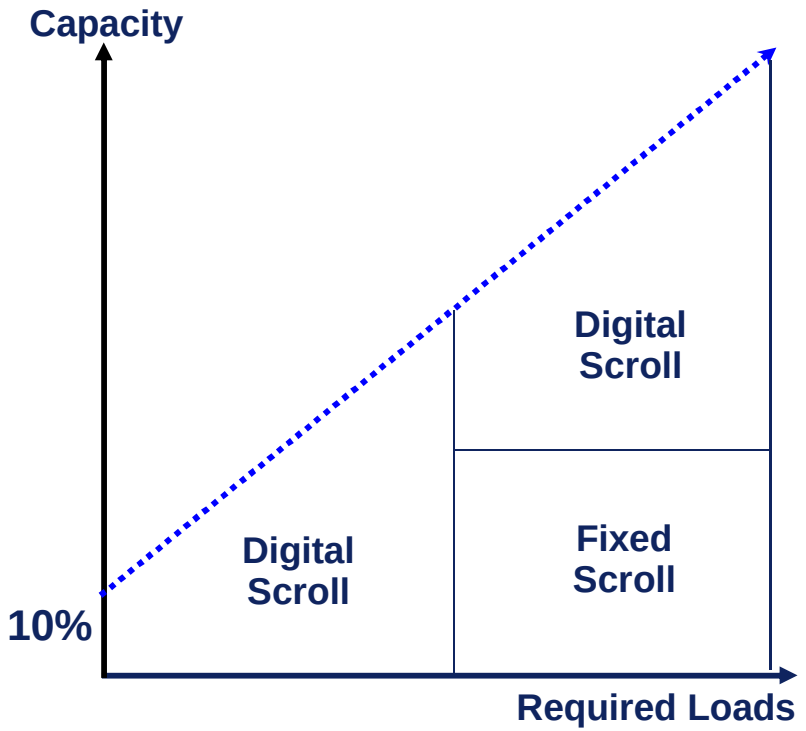

Inverter Minimum Capacity Of 33%

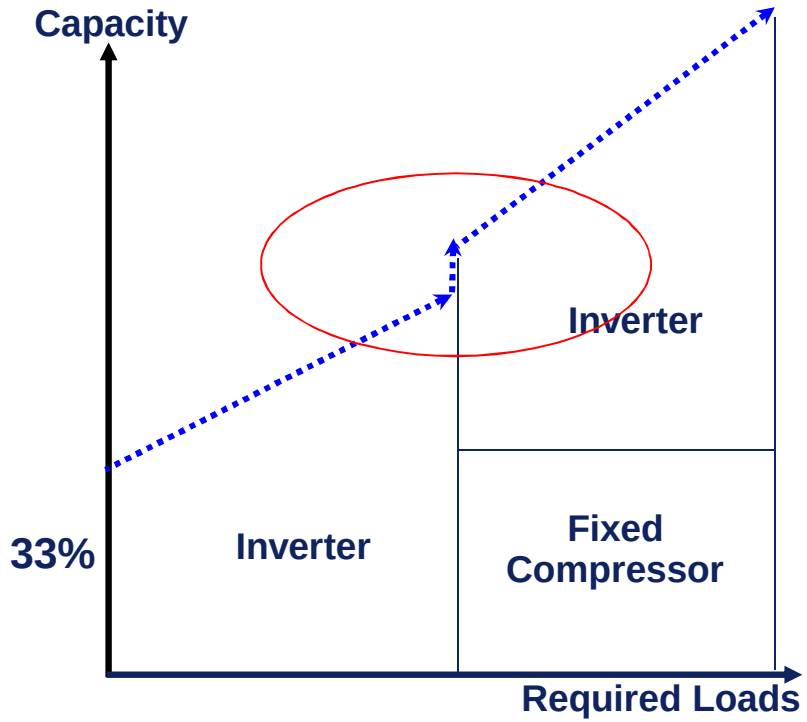

Double Inverter Compressors Lead To Complicated Electronics And Double Inverter Losses

6. Simplicity

Digital Scroll vs Inverter

Copeland® brand products

EMERSON™ Climate Technologies

Inverter System Architecture



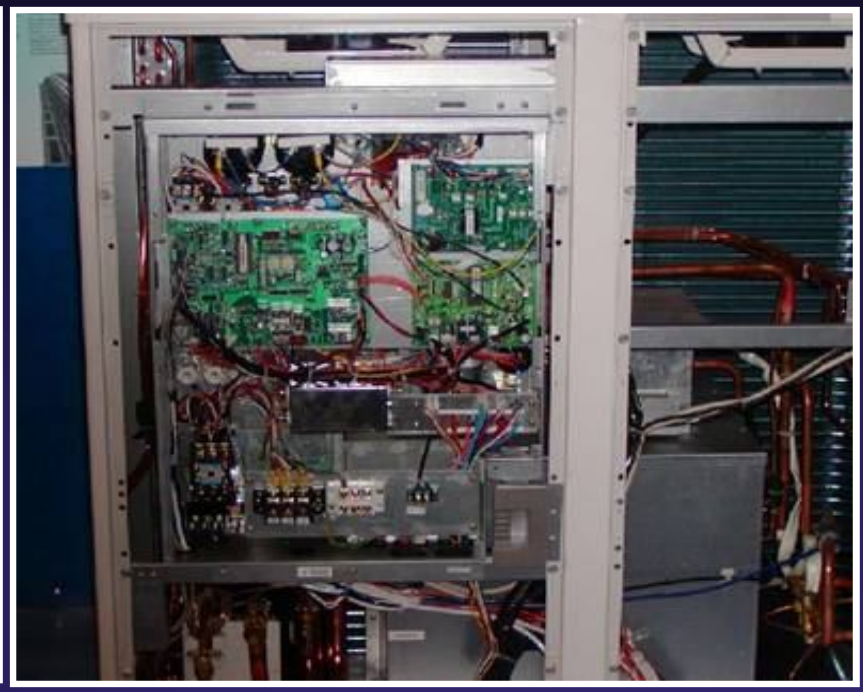

Electronic & Mechanical Architecture Complexity

Digital Scroll System Architecture





Simplified Electronic & Mechanical Architecture

7. Reliability

Digital Scroll vs Inverter

Copeland® brand products

EMERSON™ Climate Technologies

Reliability - Easy Oil Return

- **Easy Oil Return During Low Loads**
  - **No Oil "Pump Out" During Unloading**
  - **Loaded Cycle Gas Velocity Sufficient To Return Oil**
- **Don't Need Oil Separator Or Oil Return Cycle**





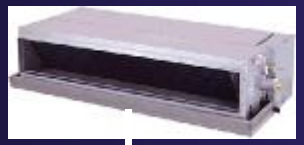









Reliability Performance

Total Digital Compressor In Field	**500,000+**
Reliability	**99.996%**

8. Electromagnetic Interference

Digital Scroll vs Inverter

Copeland® brand products

EMERSON™ Climate Technologies

Electromagnetic Interference

Digital Scroll versus Inverter

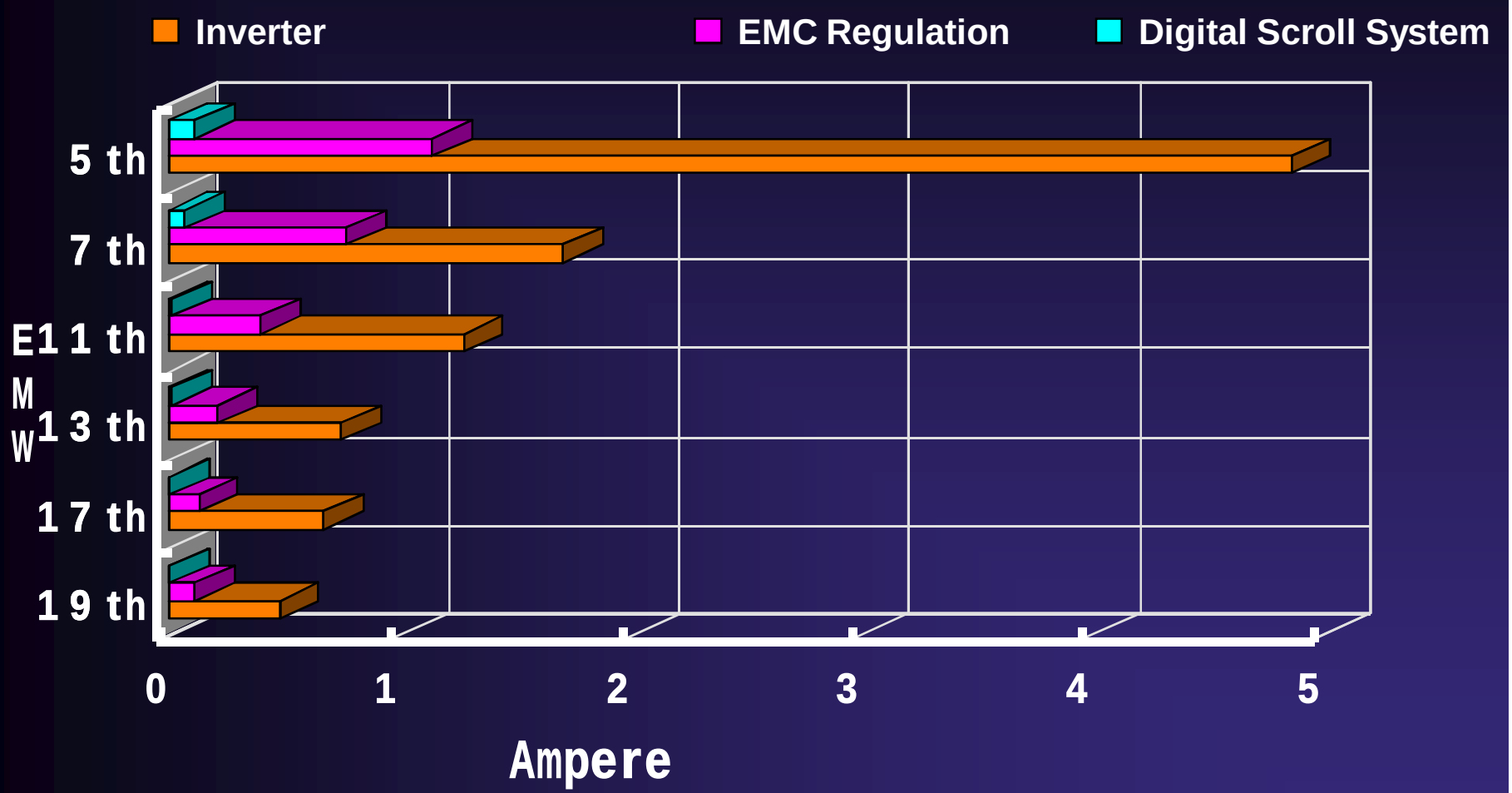

9. Vapor Injection Technology

Digital Scroll vs Inverter

Copeland® brand products

EMERSON™ Climate Technologies

Vapor Injection
Principle

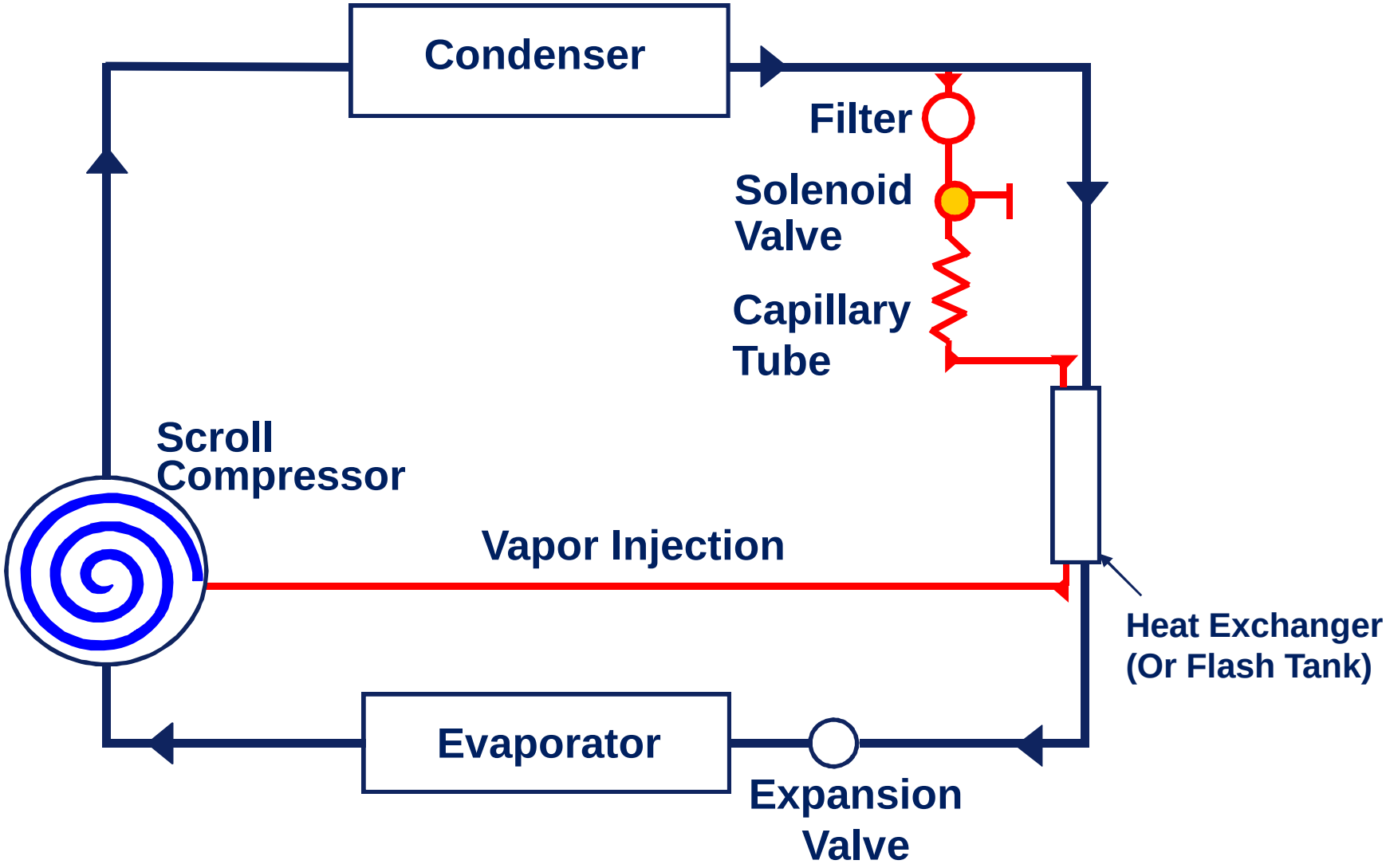

Vapor Injection
Cycle Diagram

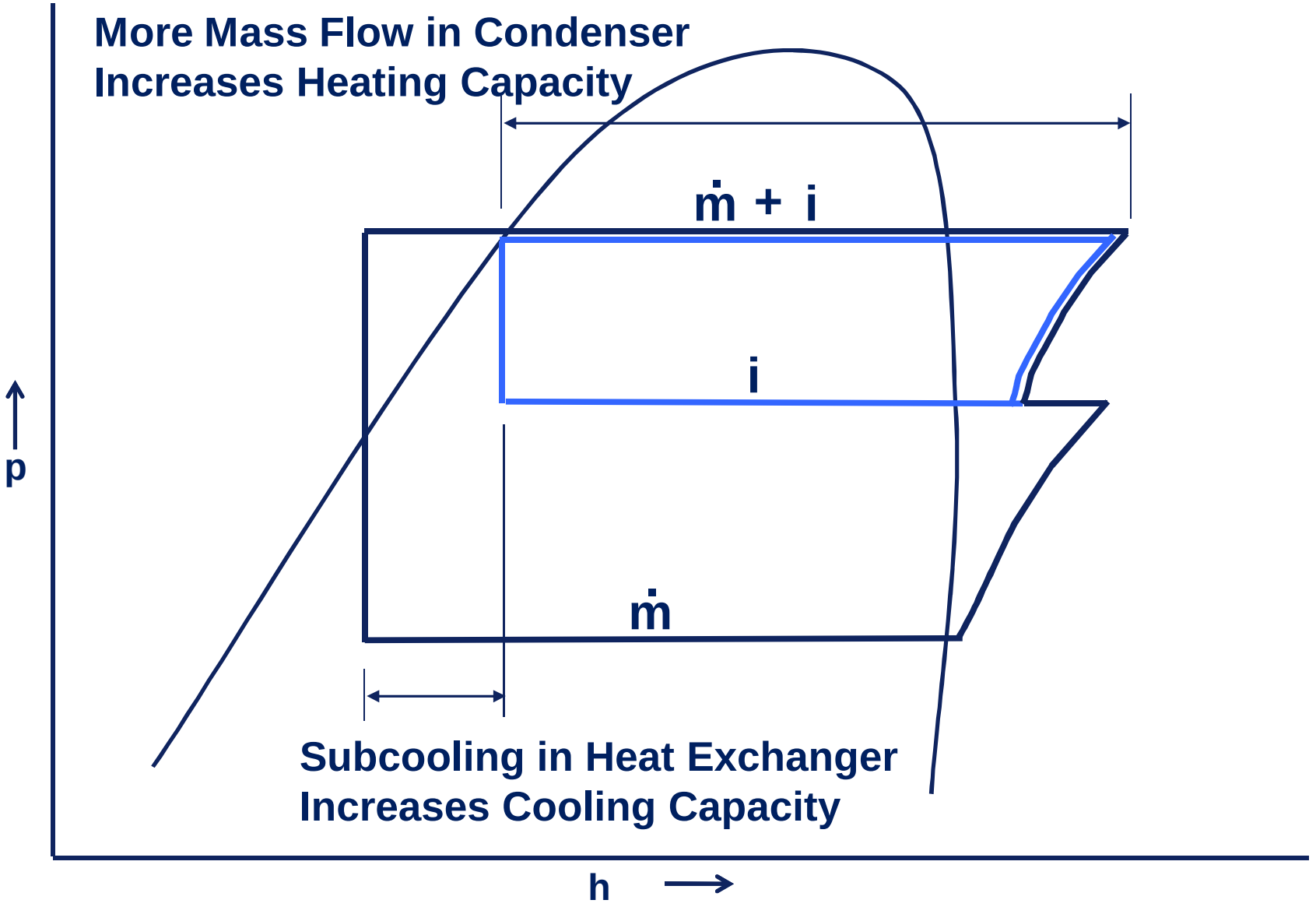

Digital Scroll With Vapor Injection Design

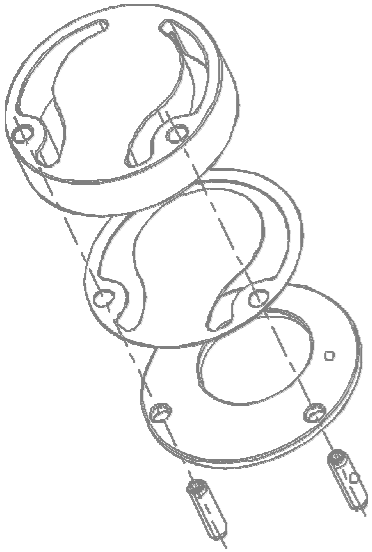

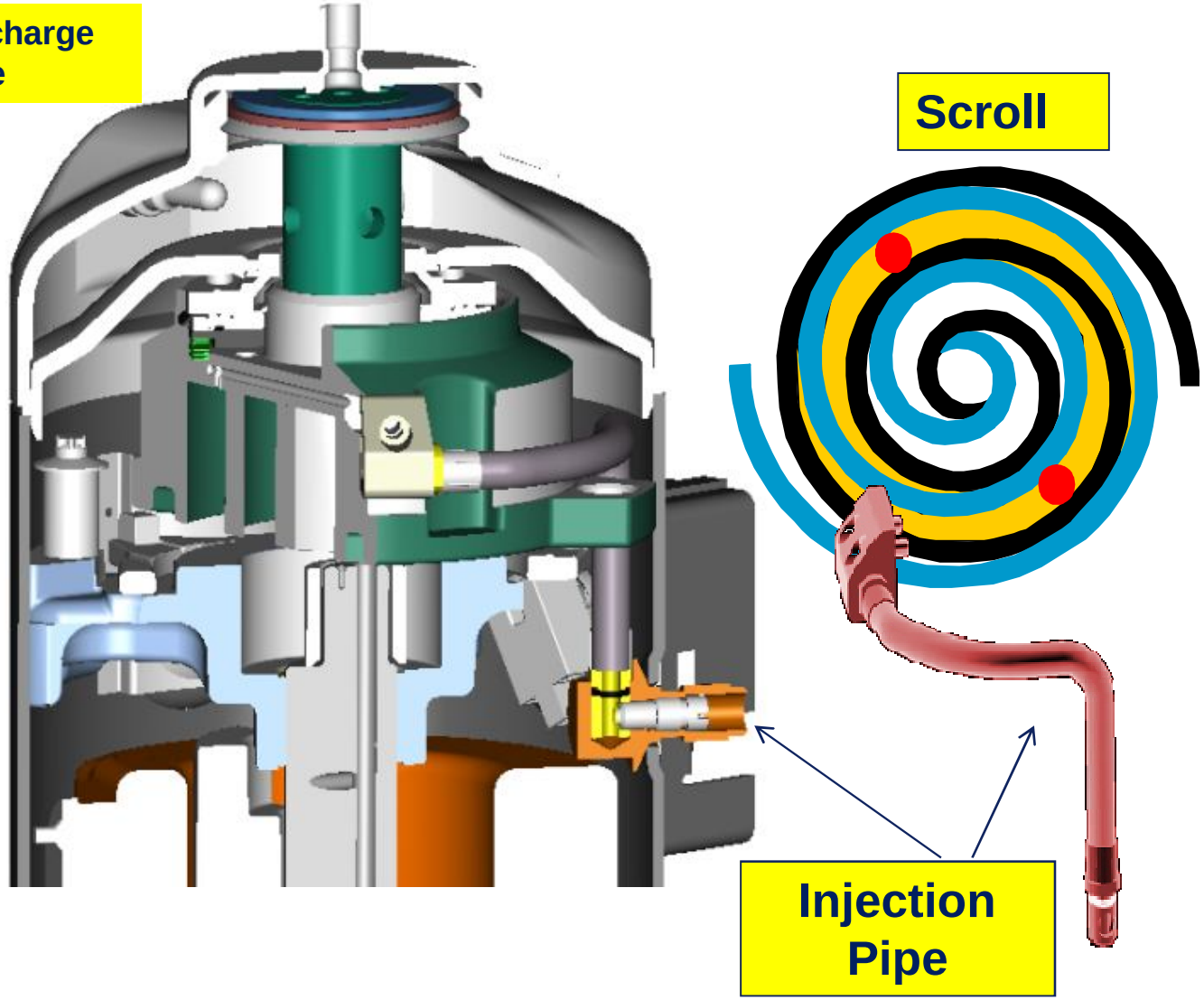

Vapor Injection

Capacity Gain

18 KW System Test Data

Ambient	Injection OFF	Injection ON	Capacity Gain	% Gain
7ºC	18,166 W	19,561 W	**1,395 W**	**7.7%**
-3ºC	13,176 W	14,936 W	**1,760 W**	**13.4%**
-7ºC	11,808 W	13,817 W	**2,009 W**	**17.0%**
-10ºC	10,574 W	12,794 W	**2,220 W**	**21.0%**
-15ºC	8,671 W	11,076 W	**2,405 W**	**27.7%**
-20ºC	7,388 W	9,906 W	**2,518 W**	**34.1%**

Vapor Injection Provides +20% Capacity enhancement

Vapor Injection Benefits

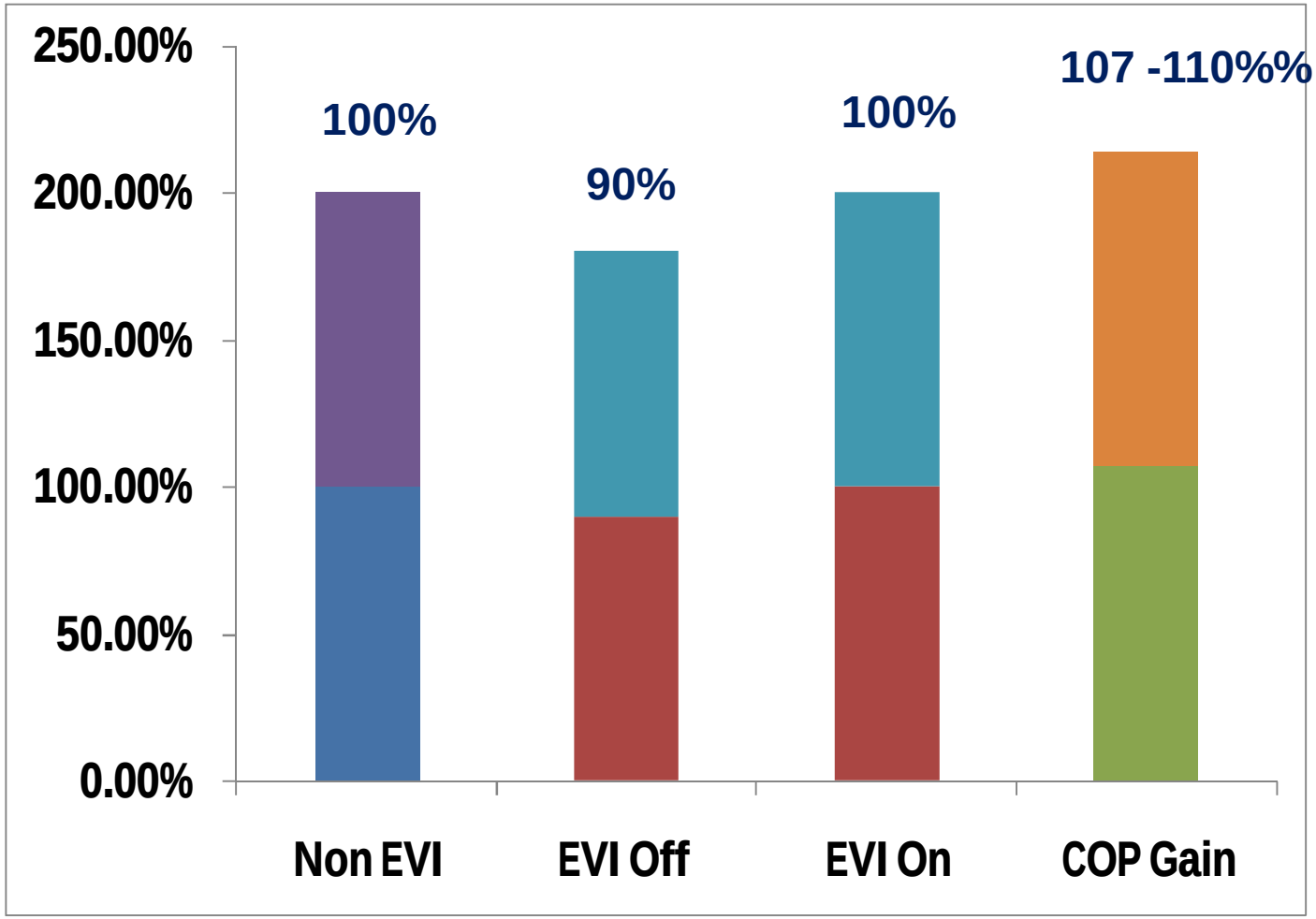

← Cooling Capacity →

www.digitalscroll.com



Emerson Climate Online University



List Of Collaterals Developed
Multiple Languages Available

1. Technology Brochure On Digital Scroll
2. Central AC (VRF) For Homes / Offices
3. Central AC (VRF) For Offices
4. Installation Manual + Power Point Presentation
5. Heat Load Calculator – Web Based & Desktop
6. Comparison Of VRF Technologies (Digital, DC Scroll, DC Rotary)
7. Articles On Digital Scroll, Digital Scroll Heating
8. Digital Scroll Heating Brochure
9. Website With Technical Details
10. On Line University
11. Advertisement & Advertorial For Technical Audience
12. Project Reference Book

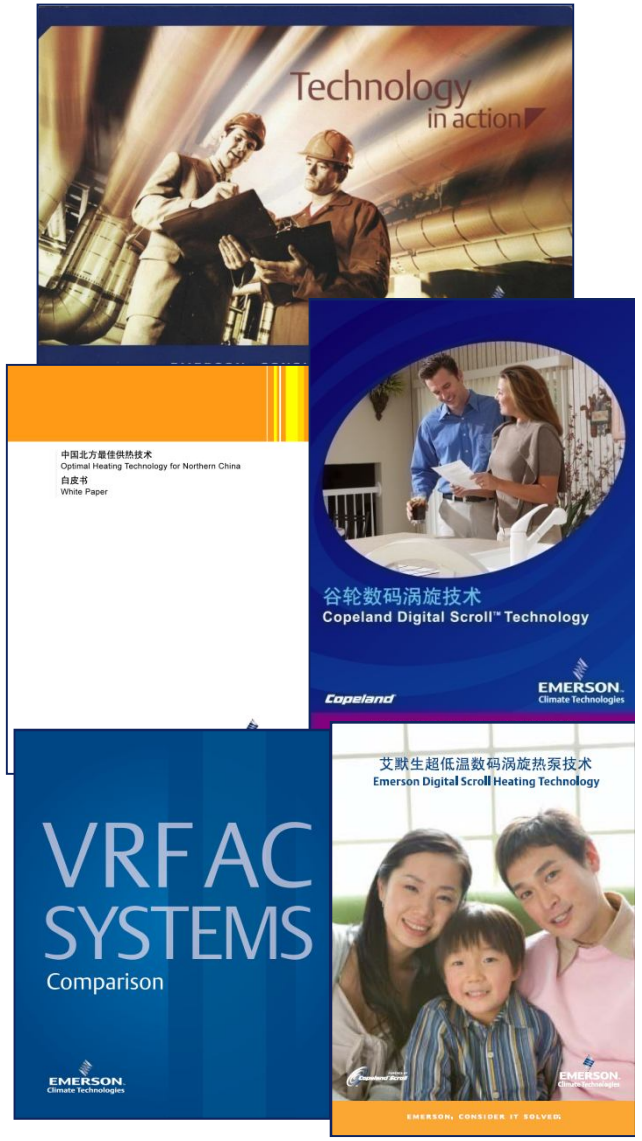

UK Market Support For DVM

1. **Provide Training To Samsung Salesman & Dealers/Installers**
   a. **Technology Explanation (Detailed Powerpoint Charts & Brochure)**
   b. **Comparison With Japanese Inverters (Powerpoint & Comparison Manual)**

2. **Conduct Technology Seminars For Consulting Engineers/Buyers (With Samsung)**

3. **Identify Key HVAC Publications (like RAC) & Start Technical Article Insertion**
   a. **Several Articles Already Exist On Digital & Vapor Injection Scrolls**

4. **Identify Key Trade Websites & Start Banner Ads/ Linkage To Digital Website**
   a. **www. digitalscroll.com Is Being Upgraded To Include Digital Vapor Injection**

5. **Start Database Marketing**
   a. **Start Building Database (Contacts) For Consultant, Dealer, Others**
   b. **Once Per Quarter Newsletter Focused On Each Segment With Specific Content**
   c. **Emerson Has Proven CRM Model To Do This From Asia**

6. **Find Speaking Opportunity During HVAC Trade Shows To Promote Samsung DVM**

7. **Do Regular Webseminars On "Most Frequently Asked Topics"**