zippie®

zippie ZONE

PARTS MANUAL

JANUARY 2022

SUNRISE MEDICAL®

improving people's lives

Cover 1
cover 1
ZIPPIE ZONE 5
GLOSSARY OF ABBREVIATIONS 5
BASE FRAME 5
FRAME 5
FRAME 6
TRANSIT KIT 10
AXLE PLATES AND AXLES 12
AXLE PLATE 12
QUICK RELEASE AXLES MATRIX-Q7/QRI/ZONE 14
CAMBER TUBES 14
CAMBER TUBE ASSM 15
CASTERS AND FORKS 16
CASTERS 16
MICRO CASTERS 17
3 SPOKE CASTERS 18
SOFT ROLL CASTERS 20
ALUMINUM SOFT ROLL CASTERS 21
FORKS 21
STANDARD MULTIPLE POSITION FORK 22
SINGLE SIDED MULTIPLE POSITION FORK 26
FROG LEG SUSPENSION FORK 30
ANTI-TIPS 31
ANTI TIPS (ZIPPIE ZONE) 32
DYNAMIC CENTER REAR CASTER 34
WHEEL LOCKS 35
HIGH MOUNT PUSH WHEEL LOCK 36
HIGH MOUNT PULL WHEEL LOCK 37
COMPACT WHEEL LOCK 38
HUB LOCK - SEAT FRAME MOUNT 39
HUB LOCK - ALUMINUM SIDE GUARD MOUNT W/FENDER 41
WHEELS AND TIRES 43
WHEELS 43
TRADITIONAL 6 SPOKE MAG 44
QUICKIE SPOKE 45
5 SPOKE MAG 46
LITE SPOKE 48
NEW ULTRA LITE SPOKE 50
SPINERGY SPOX (18 SPOKE) 52
SPINERGY LX (12 SPOKE) 53
SPINERGY SPORT LT EX (18 SPOKE) 55
TIRES 56
PNEUMATIC & PNEU. AIRLESS TIRE 57
FULL POLY TIRE 58
LOW POLY TIRE 59
HIGH PRESSURE CLINCHER TIRE 60
KNOBBY V-TRACK TIRE 61
SCHWALBE MARATHON PLUS TIRE 62
SCHWALBE ONE TIRE 63
TUBES 63
TUBES AND AIRLESS INSERTS 64
HANDRIMS 64
ALUMINUM ANODIZED (SCREW MOUNT) 65
PLASTIC COATED (SCREW MOUNT) 66
PLASTIC COATED (REG TAB MOUNT) 67
ALUMINUM ANODIZED (TAB MOUNT) 68
ULTRA LITE ANODIZED (TAB MOUNT) 69
ALUMINUM ANODIZED 5 SPOKE MAG (SCREW MOUNT) 70
PLASTIC COATED 5 SPOKE MAG (SCREW MOUNT) 71
NATURAL FIT 5 SPOKE MAG (SCREW MOUNT) 72
SEATING AND POSITIONING 72
SEAT 72
SEAT SLING ULTRA LITE (ZONE) 73
1" SEAT CUSHION 75
2" SEAT CUSHION 77
BACK 79
BACK FRAMES 79
FOLDING ANGLE ADJ BACK FRAME 80
FOLDING INSET ANGLE ADJ BACK FRAME 82

BACKREST HANDLES 84
TELESCOPING PUSH HANDLES (BOLT ON) 85
BACK UPHOLSTERY 86
STANDARD BACK UPHOLSTERY ZIPPIE 87
INTEGRAL PUSH HANDLE BACKREST UPHOLSTERY ZIPPIE 89
TENSION ADJUSTABLE BALLISTIC NYLON UPHOLSTERY ZIPPIE 91
FOOTREST 93
ALUMINUM TUBULAR prior to S/N R4-023230 94
FOOTREST COVER & WEAR PADS 97
ALUMINUM PLATFORM FOOTREST 98
FLIP-BACK FOOTREST 103
HIGH MOUNT FOOTREST CLAMP 106
ADAPTIVE FLIP-BACK FOOTREST 107
ARMREST AND RECEIVER 109
ARMREST 109
PADDED SWING-AWAY ARMREST 110
SINGLE POST HEIGHT ADJUSTABLE ARMREST 111
KIDS T POST ARMREST 113
ARMREST RECEIVER 113
PADDED SWING-AWAY ARMREST RECEIVER 114
SINGLE POST ARMREST RECEIVER 115
GEL PAD FOR PADDED SWING-AWAY ARMREST 116
ACCESSORIES 116
BACK PACKS AND SEAT POUCHES 116
QUICKIE SIDE POCKET 117
CELL PHONE PACK 118
BACKPACKS AND SEAT POUCHES 119
POSITIONING BELTS 119
AIRCRAFT BUCKLE POSITIONING BELTS & ATTACHMENT KITS 120
AUTO BUCKLE POSITIONING BELT & ATTACHMENT KITS 122
SIDEGUARDS 123
PLASTIC SIDE GUARD 124
ALUMINUM SIDE GUARD 125
SPOKE GUARDS 126
SPOKE GUARDS ZIPPIE 127
TRAYS 128
TUFFAK TRAY (MANUAL & PEDIATRIC CHAIRS) 129
TRAY HARDWARE 131
QUICKIE CADDY 132
CRUTCH HOLDER (RIGID CHAIRS) 133
ADJUSTABLE LEG STRAP 134
IMPACT GUARD NEOPRENE & GEL VELCRO PADS 135
TIRE PUMP 136
TOOL KIT 137
Category 137
back cover 138

Note: see Informations Panel for file.

1AD	One Arm Drive
3DCR	3DX Microclimatic cover for Cryo style inserts
AAA	Adult Angle Adjustable
AACM	Angle Adjustable Center Mount
ABD	Abductor
AC	All Court
AD	Arm Drive
ADJ	Adjustable
ADPT	Adapter
AE	Air Exchange
AHAB	ASAP II
ANG	Angle
ALR	Articulating Legrest
ALUM	Aluminum
AMH	Adjustable Mounting Hardware
ANO	Anodized
ASAP	Adjustable Seating and Positioning
ASL	Adaptive Switch Labratories
ASM	Assembly (includes other parts)
ASSM	Assembly
ASSMLY	Assembly
ASSY	Assembly
AT	Anti-tip
ATT	Attachment
BB	Basketball
BC	Breezy Chrome
BCK	Back
BCKBRD	Backboard
BH	Button Head
BHCS	Button Head Cap Screw
BKL	Buckle
BKRST	Backrest
B-LOCK	Back Lock
BLD	Build Up
BLK	Black
BLU	Blue
BR	Breezy
BRD	Board
BRNG	Bearing
BRKT	Bracket
BSHNG	Bushing
BTTN	Button
BTTRY	Battery
BZ	Breezy
CAA	Composite Angle Adjustable
CG	Center of Gravity
CGT	Center of Gravity Tilt (AKA: IRIS)
CHRGR	Charger
CJSM	Color Joystick Module
CLMP	Clamp
CLNCHR	Clincher
CLR	Clear
COMP	Complete
CMPST	Composite
CRM	Chrome
C/S	Cap Screw
C-S	Countersunk
CSTR	Caster
CUSH	Cushion
CV	Conventional
CVR	Cover
CVRS	Covers
CYL	Cylinder
CZ	Cozy
DAB	Depth-adjustable Back
DB	Dynamic Back
DBL	Double
DC	Deep Contour
DL	Desk Length
DP	Dual Post Armrest
D-Post	Dual Post Armrest
D-PST	Dual Post Armrest
DRP	Drop (seat)
DRV	Drive
DTT	Diagnostic Test Tool
DY	Dynamic Back
EA	Each
ELR	Elevating Legrest
EXT	Extension
EXTND	Extended
F	Folding Frame
FHCS	Flat Head Cap Screw
FL	Full Length
FLD	Folding
FL FT	Flip-up Footrest
FLP	Flip
FLRD	Flared
FM	Foam
FM	Front Mount
FNDR	Fender
FPH	Folding Push Handle
FT	Foot
F/REST	Footrest
FRNT	Front
FT PLT	Footplate
FTRST	Footrest
F/UP	Flip-up
FWD	Front Wheel Drive
FXT	Fixed
G8	Grade 8 higher grade = stronger
GP	Quickie GP
GPS	Quickie GPS
GPV	Quickie GPV
GNRC	Generic
H	Hole
HB	High Brake
HD	Head or Heavy Duty
H/D	Heavy Duty
HDRST	Headrest
HDWR	Hardware
HEX	Hexagon
HH	Hemi-Height or Hex Head
HK	Hook
HL	Heel Loops
HM	High Mount
HNDL	Handle
HNGR	Hanger
HP	High Pressure
HR	Handrim
HRDWR	Hardware
HRNSS	Harness
HS	High Speed
HT	Height or Heat Treated
ID	Inner/Inside Dimension Diameter
I N	In/Out (for swing in/out hangers)
INBRD	Inboard
INC	Incontinent
INH	Inhibit
INORG	Inorganic coating
INSRT	Insert
I/O	Swing In Out
IRIS	Intelligent Rotation in Space
ISM	Intelligent Seating Module
JA	Jay Active
JNR	Junior
KAA	Kids Angle Adjustable
KDS	Kids
KT	Kit (usually consists of all mounting hardware for one side)
KVLR	Kevlar
KZ	Quickie Kidz/Zippie Kidz
L	Left
LAT	Lateral
LCK	Lock
LFH	Left Front Horizontal
LFT	Left
LFV	Left Front Vertical
LH	Left Hand
LH	Left Horizontal
LK	Lock
LNG	Long
LO	Lift Off
L/O	Lift Off
LP	Loop
LPS	Loops
LRG	Large
LRH	Left Rear Horizontal
LRV	Left Rear Vertical
LS	Low Sheer
LT	Long Tab
LT	Natural Fit Lite Handrims
LTRL	Lateral
LUMB	Lumbar
LV	Left Vertical
LW	Low
LX	Quickie LX
LXI	Quickie LXi
MACH	Machine
MECH	Mechanism
MED	Medium
mm	Millimeter
MNT	Mount
MNTG	Mounting
MOD	Modify or Modification
M/S	Machine Screw
MWD	Mid Wheel Drive
Nat.Fit	Natural Fit Handrim
NAUG	Naugahyde
NF	Non-folding
NF	Natural Fit Handrim
NFLT	Natural Fit Lite Handrim
NR	Non-recessed
OBLIQ	Obliquity
OBLQ	Oblique
OD	Outer/Outside Dimension
O/S	Old Style
OUTBRD	Outboard
P1	Quickie P100
P2	Quickie P200
P3	Quickie P300
P5	Quickie/Zippie P500
PCB	Pediatric Center of Gravity (AKA: Zippie Iris)
PCM	Power Center Mount
PED	Pediatric
PEL	Pelvic
PH	Push Handle
PHIL	Phillips
P/L	Pin Lock
PL	Plated
PLL	Pull
PLT	Plate
PLST	Plastic
PLY	Plywood
PNEU	Pneumatic
PNK	Pink
PNT	Paint
PNTD	Painted
POLY	Polyurethane
POST	Posterior
PR	Pressure Relieving
PR	Power Recline
PR	Pair
(PR)	Pair
PRCR	Premium Leatherette cover for Cryo style inserts
PRE-ISC	Pre-Ischial
PREM	Premium Leatherette cover material
PROJ	Projection
PRPL	Purple
PRTL	Partial
PSH	Push
PT	Point
PTTRN	Pattern
PWR	Power
Q1	Quickie 1
Q2	Quickie 2
Q2HP	Quickie 2 High Performance
QC	Quickie Carbon
QR	Quick Release
QRx	Quickie RX
QTi	Quicke Titanium
QT/QTS	Quickie Tilt & Space
QUAD	Quadrant Pad
R	Right
RCLNR	Recliner
REC	Receiver
REG	Regular
REL	Release
REV	Reverse
RH	Right Hand
RH	Right Horizontal
RFH	Right Front Horizontal
RFV	Right Front Vertical
RNUT(S)	Rivnut(s)
RoHS	Restriction of Hazardous Substances
RR	Rear
RRH	Right Rear Horizontal
RRV	Right Rear Vertical
RT	Right
RV	Right Vertical
RV	Quickie Revolution
RWD	Rear Wheel Drive
SA	Swing Away
S/A	Swing Away
S/F	Side Frame
SCW	Screw
SDLE	Saddle
SG	Side Guard
SGTG	Super Grip Thumb Guard
SHCS	Socket Head Cap Screw
SHSS	Socket Head Set Screw
SHLDR	Shoulder
SHT	Short
SLD	Solid
SLNG	Sling
SLTD	Slotted
SLV	Sleeve
SM	Small
SNGL	Single
SOC	Socket
SPCR	Spacer
SPEC CLR	Specify Color
SPHA	Single Post Height Adjustable
SPK	Spoke
SPR	Super Grip Handrim
SQZ	Squeeze
SS	Stainless Steel
ST	Seat
S/TAP	Self Tapping
STCR	Stretch Cover for Cryo Style inserts
STD	Standard
STL	Style
STR	Stretch cover material
STRLR	Stroller
STRT	Straight
SUP	Support
SYS	System
T	Tab
TG	Thumb Guard (std)
THRD	Threaded
Ti	Titanium
TL	Tall
TLC	Tilt Lift Comb
TLT	Tilt
TNNS	Tennis
TS	Tilt-in-Space
TTS	Tilt-in-Space
UNIV	Universal
UNTHRD	Unthreaded
UPH	Upholstery
VERT	Vertical
W	With
W/	With
WD	Wide
W/F	Water Fall
W/O	Without
WHL	Wheel
WLDMNT	Weldment
XS	Cross Spoke
YLW	Yellow
Z2	Zippie 2
ZN	Zinc
ZP	Zippie
ZP2	Zippie 2

Pos.	Item Number	Description	Remarks
		GLOSSARY OF ABBREVIATIONS	see attachment in Informations Panel

FRAME

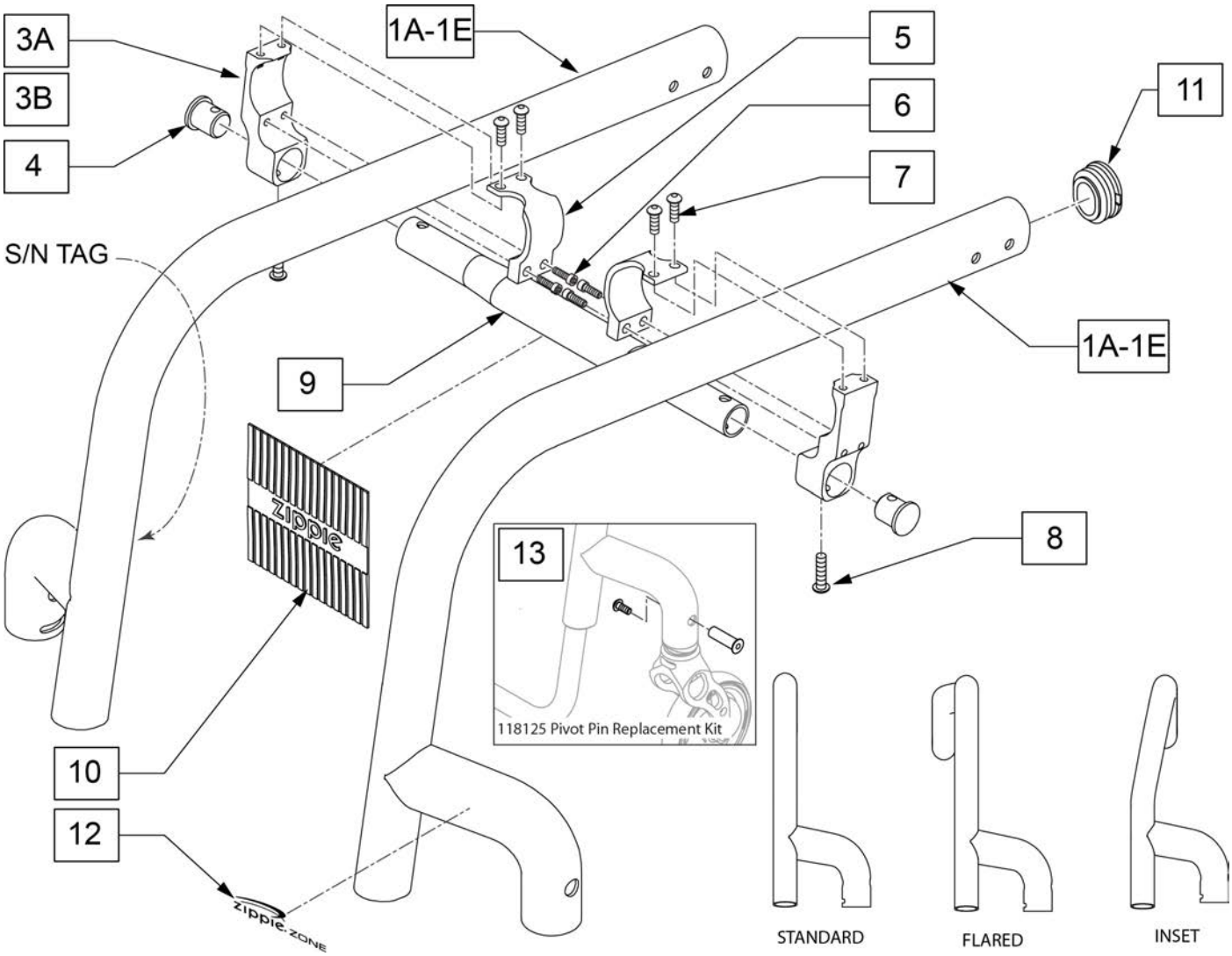

Pos.	Item Number	Description	Remarks
3A	-	Order Clamp Assembly	Use with Painted
3B	-	Order Clamp Assembly	Use with Anodized
3A,5-7	116667	STRUT CLAMP ASSEMBLY	Use prior to S/N RZ-006361(painted)
3B,5-7	120968	STRUT CLAMP ASSEMBLY	Use after S/N RZ-006361(anodized)
4	120705	ALUMINUM INSERT WITH FLAT	
6	113317	SHCS M5X0.8X25 FULL PL	
7	103184-002	BHCS,M5X0.8X8,FULL,PL	
8	102262-004	BHCS M6 X 1 X 25 W/PL INORG	
9	120509	CROSS TUBE PED 8" ANNO	
9	120510	CROSS TUBE PED 9" ANNO	
9	120511	CROSS TUBE PED 10" ANNO	
9	120512	CROSS TUBE PED 11" ANNO	
9	120513	CROSS TUBE PED 12" ANNO	
9	120514	CROSS TUBE PED 13" ANNO	
9	120515	CROSS TUBE PED 14" ANNO	
9	120516	CROSS TUBE PED 15" ANNO	
9	120517	CROSS TUBE PED 16" ANNO	
10	112312	GRIP TOWEL BAR ZIPPIE	

Pos.	Item Number	Description	Remarks
11	110161	FRAME INSERT, REAR SEAT TUBE	
12	115948	DECAL ZIPPIE ONE, CASTER LINK BLACK	
12	115949	DECAL ZIPPIE ONE, CASTER LINK SILVER	
13	118125	PIVOT PIN REPLACEMENT KIT	Pair
3B-10	120925	CROSS TUBE 8 W ASSM	
3B-10	120930	CROSS TUBE 9 W ASSM	
3B-10	120931	CROSS TUBE 10 W ASSM	
3B-10	120932	CROSS TUBE 11 W ASSM	
3B-10	120933	CROSS TUBE 12 W ASSM	
3B-10	120934	CROSS TUBE 13 W ASSM	
3B-10	120935	CROSS TUBE 14 W ASSM	
3B-10	120936	CROSS TUBE 15 W ASSM	
3B-10	120937	CROSS TUBE 16 W ASSM	
1A,11	116958S	8 DP 80D RGD 0I SET 1 R	
1A,11	116959S	8 DP 80D RGD 0I SET 1 L	
1A,11	116960S	9 DP 80D RGD 0I SET 1 R	
1A,11	116961S	9 DP 80D RGD 0I SET 1 L	
1A,11	116962S	10 DP 80D RGD 0I SET 1 R	
1A,11	116963S	10 DP 80D RGD 0I SET 1 L	
1A,11	116964S	11 DP 80D RGD 0I SET 1 R	
1A,11	116965S	11 DP 80D RGD 0I SET 1 L	
1A,11	116966S	12 DP 80D RGD 0I SET 1 R	
1A,11	116967S	12 DP 80D RGD 0I SET 1 L	
1A,11	116968S	13 DP 80D RGD 0I SET 1 R	
1A,11	116969S	13 DP 80D RGD 0I SET 1 L	
1A,11	116970S	14 DP 80D RGD 0I SET 1 R	
1A,11	116971S	14 DP 80D RGD 0I SET 1 L	
1A,11	116972S	15 DP 80D RGD 0I SET 1 R	
1A,11	116973S	15 DP 80D RGD 0I SET 1 L	
1A,11	116974S	16 DP 80D RGD 0I SET 1 R	
1A,11	116975S	16 DP 80D RGD 0I SET 1 L	
1A,11	116976S	17 DP 80D RGD 0I SET 1 R	
1A,11	116977S	17 DP 80D RGD 0I SET 1 L	
1A,11	116978S	18 DP 80D RGD 0I SET 1 R	
1A,11	116979S	18 DP 80D RGD 0I SET 1 L	
1B,11	116980S	8 DP 80D RGD 0I SET 2 R	
1B,11	116981S	8 DP 80D RGD 0I SET 2 L	
1B,11	116982S	9 DP 80D RGD 0I SET 2 R	
1B,11	116983S	9 DP 80D RGD 0I SET 2 L	
1B,11	116984S	10 DP 80D RGD 0I SET 2 R	
1B,11	116985S	10 DP 80D RGD 0I SET 2 L	
1B,11	116986S	11 DP 80D RGD 0I SET 2 R	
1B,11	116987S	11 DP 80D RGD 0I SET 2 L	
1B,11	116988S	12 DP 80D RGD 0I SET 2 R	
1B,11	116989S	12 DP 80D RGD 0I SET 2 L	
1B,11	116990S	13 DP 80D RGD 0I SET 2 R	
1B,11	116991S	13 DP 80D RGD 0I SET 2 L	
1B,11	116992S	14 DP 80D RGD 0I SET 2 R	
1B,11	116993S	14 DP 80D RGD 0I SET 2 L	
1B,11	116994S	15 DP 80D RGD 0I SET 2 R	
1B,11	116995S	15 DP 80D RGD 0I SET 2 L	
1B,11	116996S	16 DP 80D RGD 0I SET 2 R	
1B,11	116997S	16 DP 80D RGD 0I SET 2 L	
1B,11	116998S	17 DP 80D RGD 0I SET 2 R	
1B,11	116999S	17 DP 80D RGD 0I SET 2 L	
1B,11	117000S	18 DP 80D RGD 0I SET 2 R	
1B,11	117001S	18 DP 80D RGD 0I SET 2 L	

Pos.	Item Number	Description	Remarks
1C,11	117002S	8 DP 80D RGD 1I SET 2 R	
1C,11	117003S	8 DP 80D RGD 1I SET 2 L	
1C,11	117004S	9 DP 80D RGD 1I SET 2 R	
1C,11	117005S	9 DP 80D RGD 1I SET 2 L	
1C,11	117006S	10 DP 80D RGD 1I SET 2 R	
1C,11	117007S	10 DP 80D RGD 1I SET 2 L	
1C,11	117008S	11 DP 80D RGD 1I SET 2 R	
1C,11	117009S	11 DP 80D RGD 1I SET 2 L	
1C,11	117010S	12 DP 80D RGD 1I SET 2 R	
1C,11	117011S	12 DP 80D RGD 1I SET 2 L	
1C,11	117012S	13 DP 80D RGD 1I SET 2 R	
1C,11	117013S	13 DP 80D RGD 1I SET 2 L	
1C,11	117014S	14 DP 80D RGD 1I SET 2 R	
1C,11	117015S	14 DP 80D RGD 1I SET 2 L	
1C,11	117016S	15 DP 80D RGD 1I SET 2 R	
1C,11	117017S	15 DP 80D RGD 1I SET 2 L	
1C,11	117018S	16 DP 80D RGD 1I SET 2 R	
1C,11	117019S	16 DP 80D RGD 1I SET 2 L	
1C,11	117020S	17 DP 80D RGD 1I SET 2 R	
1C,11	117021S	17 DP 80D RGD 1I SET 2 L	
1C,11	117022S	18 DP 80D RGD 1I SET 2 R	
1D,11	117023S	18 DP 80D RGD 1I SET 2 L	
1D,11	117024S	8 DP 80D FLARED SET 1 R	
1D,11	117025S	8 DP 80D FLARED SET 1 L	
1D,11	117026S	9 DP 80D FLARED SET 1 R	
1D,11	117027S	9 DP 80D FLARED SET 1 L	
1D,11	117028S	10 DP 80D FLARED SET 1 R	
1D,11	117029S	10 DP 80D FLARED SET 1 L	
1D,11	117030S	11 DP 80D FLARED SET 1 R	
1D,11	117031S	11 DP 80D FLARED SET 1 L	
1D,11	117032S	12 DP 80D FLARED SET 1 R	
1D,11	117033S	12 DP 80D FLARED SET 1 L	
1D,11	117034S	13 DP 80D FLARED SET 1 R	
1D,11	117035S	13 DP 80D FLARED SET 1 L	
1D,11	117036S	14 DP 80D FLARED SET 1 R	
1D,11	117037S	14 DP 80D FLARED SET 1 L	
1D,11	117038S	15 DP 80D FLARED SET 1 R	
1D,11	117039S	15 DP 80D FLARED SET 1 L	
1D,11	117040S	16 DP 80D FLARED SET 1 R	
1D,11	117041S	16 DP 80D FLARED SET 1 L	
1D,11	117042S	17 DP 80D FLARED SET 1 R	
1D,11	117043S	17 DP 80D FLARED SET 1 L	
1D,11	117044S	18 DP 80D FLARED SET 1 R	
1D,11	117045S	18 DP 80D FLARED SET 1 L	
1E,11	117046S	8 DP 80D FLARED SET 2 R	
1E,11	117047S	8 DP 80D FLARED SET 2 L	
1E,11	117048S	9 DP 80D FLARED SET 2 R	
1E,11	117049S	9 DP 80D FLARED SET 2 L	
1E,11	117050S	10 DP 80D FLARED SET 2 R	
1E,11	117051S	10 DP 80D FLARED SET 2 L	
1E,11	117052S	11 DP 80D FLARED SET 2 R	
1E,11	117053S	11 DP 80D FLARED SET 2 L	
1E,11	117054S	12 DP 80D FLARED SET 2 R	
1E,11	117055S	12 DP 80D FLARED SET 2 L	
1E,11	117056S	13 DP 80D FLARED SET 2 R	
1E,11	117057S	13 DP 80D FLARED SET 2 L	
1E,11	117058S	14 DP 80D FLARED SET 2 R	

Pos.	Item Number	Description	Remarks
1E,11	117059S	14 DP 80D FLARED SET 2 L	
1E,11	117060S	15 DP 80D FLARED SET 2 R	
1E,11	117061S	15 DP 80D FLARED SET 2 L	
1E,11	117062S	16 DP 80D FLARED SET 2 R	
1E,11	117063S	16 DP 80D FLARED SET 2 L	
1E,11	117064S	17 DP 80D FLARED SET 2 R	
1E,11	117065S	17 DP 80D FLARED SET 2 L	
1E,11	117066S	18 DP 80D FLARED SET 2 R	
1E,11	117067S	18 DP 80D FLARED SET 2 L	

Note: Caster setting 1 & 2 is determined by caster size and frame style. For Standard & Flared Frames using 3" & 4" casters, utilize Caster setting 1. For Standard & Flared Frames using 5" & 6" casters, utilize Caster setting 2. Inset Frame uses caster setting 2 only regardless of caster size.

Note: When ordering replacement frames you must provide the front seat height,rear seat height, frame color,FS Dim and if chair is equipped with a seat frame mount Hublock.

Note: See Back Frame pages for Padded Swing-Away Armrest inserts.

Note: Side Frames have 3" of Depth Growth built in (example 10" deep frame can accommodate 11"-13" depths), except for 16",17" & 18" frame depths which will only grow up to 18" seat depths.

Note: Transit option utilizes a 1" longer frame, when ordering replacement frames order a frame with 1" increase in depth.

NOTE: When changing from painted to anodized cross tube, the receivers must be replaced. Serial #'s prior to RZ-006361 shipped with a painted cross tube.

NOTE: Frame replacements on chairs prior to RZ-004209 may need Item #118125, Pivot Pin Replacement Kit (Qty 1) if not previously upgraded.

TRANSIT KIT

NOTE: * For s/n prior to RZ-007453, Caster Bolt must be changed out for Transit approval.

NOTE: Transit Option not available with 18" Seat Depth or on Seat Heights below 15" with Inset Frame.

NOTE: Transit retrofit on a Zone that did not already have the Transit option or DOES NOT have the Transit Ready frame option will reduce growth adustability by 1".

NOTE: Transit retrofit on a Zone that did not already have the Transit option or DOES NOT have the Transit Ready frame option but has Padded S/A Arms will reduce growth adustability by 2".

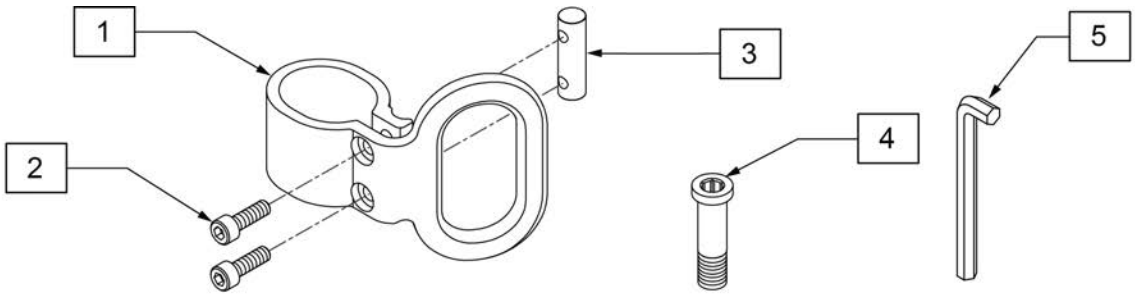

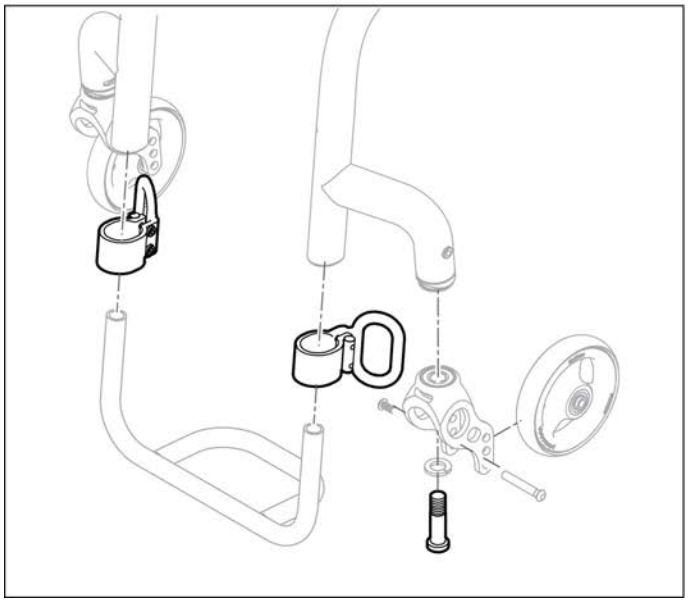

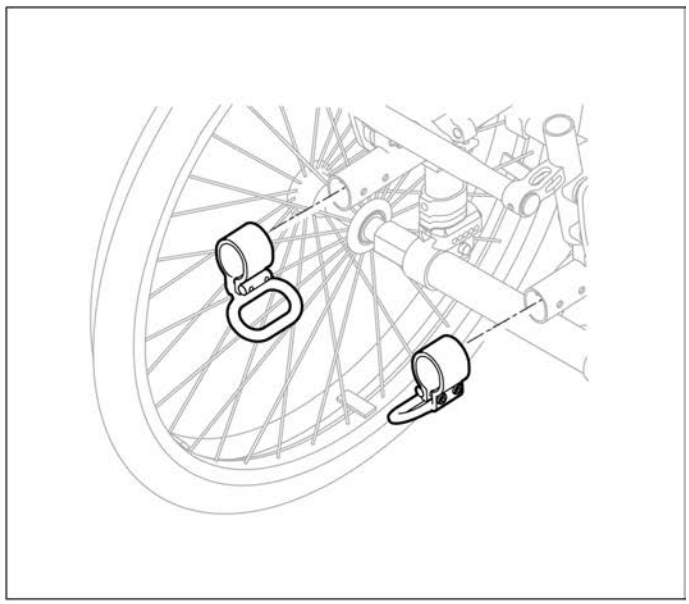

Pos.	Item Number	Description	Remarks
2	112341	SHCS M5X0.8X16 FULL PL	
3	112655	ROUND NUT SIZE 4	
4	481398	SHCS M12 1.75 ANGLE ADJ	*For s/n prior to RZ-007453, this part must be installed to be Transit approved
5	120953	8MM ALLEN WRENCH L, SHORT	For adjusting stem bolt
1-5	118048	OVAL TRANSIT KIT	

AXLE PLATE

Note: Axle Plates were updated on chairs built after S/N RZ-009517. Original parts no longer available Axle plates need to be replaced in pairs with complete kit.

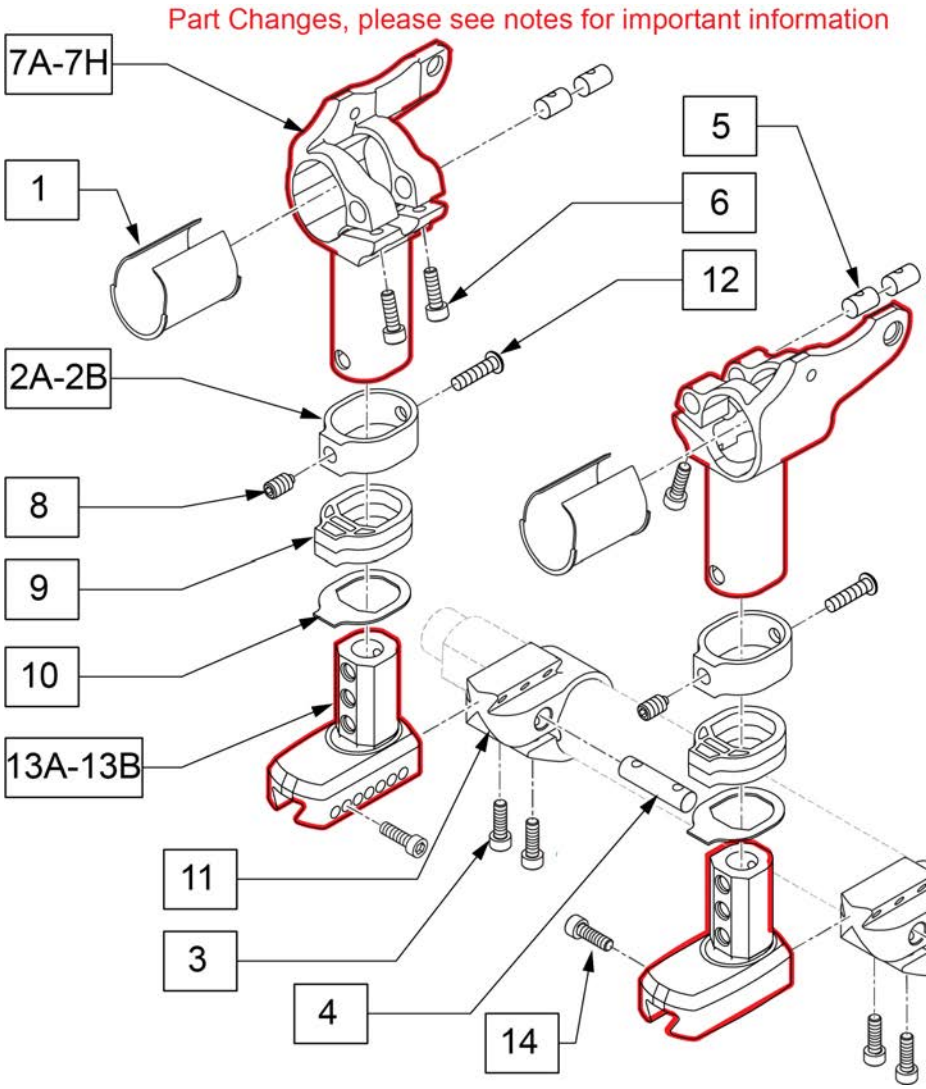

AXLE TUBE MEASURING GUIDE

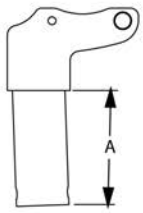

SIZE	DIM "A"
1	1 3/8
2	1 7/8
3	2 3/8
4	2 7/8
5	3 3/8
6	3 7/8
7	4 3/8
8	4 7/8

AXLE BRACKET SACER MEASURING GUIDE

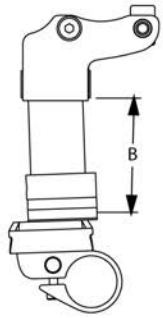

AXLE PLATE SIZE	SPACER	DIM "B"
1	No Spacer	1 3/8
	1 Spacer	1 7/8
	2 Spacers	2 3/8
2	No Spacer	1 7/8
	1 Spacer	2 3/8
	2 Spacers	2 7/8
3	No Spacer	2 3/8
	1 Spacer	2 7/8
	2 Spacers	3 3/8
4	No Spacer	2 7/8
	1 Spacer	3 3/8
	2 Spacers	3 7/8
5	No Spacer	3 3/8
	1 Spacer	3 7/8
	2 Spacers	4 3/8
6	No Spacer	3 7/8
	1 Spacer	4 3/8
	2 Spacers	4 7/8
7	No Spacer	4 3/8
	1 Spacer	4 7/8
	2 Spacers	5 3/8
8	No Spacer	4 7/8
	1 Spacer	5 3/8
	2 Spacers	5 7/8

Pos.	Item Number	Description	Remarks
1	066505	AXLE STEM SLEEVE	
2A,8,12	114382	AXLE TUBE CLAMP W/SCRW (PR)	Pair - black
2B	117171S	AXLE TUBE SPCR CSTM ANO	Each-Choose custom anodized color
3	112341	SHCS M5X0.8X16,FULL,PL	
4	112655	ROUND NUT SIZE 4	
5	112653	ROUND NUT SIZE 2	
6	103181	SHCS M5 X .8 X 14 W/PL	
8	102267	SET SCREW M8 X 16 DOG PT	
9	126800	AXLE TUBE SPACER	Not used with short camber Axle Plug
10	126801	AXLE TUBE SPACER THIN	
3,4,11	116684	CAMBER TUBE CLAMP W/HDWR	
12	103185-006	M6-1.0 X 16MM BUTTON HD SOCKET	
14	113317	SHCS M5X0.8X25 FULL PL	
1,2A-7A,8-13A,14	116685	AXLE PLATE 1 STD KIT ZONE	PAIR

Pos.	Item Number	Description	Remarks
1,2A-7B,8-13A,14	116686	AXLE PLATE 2 STD KIT ZONE	PAIR
1,2A-7C,8-13A,14	116687	AXLE PLATE 3 STD KIT ZONE	PAIR
1,2A-7D,8-13A,14	116688	AXLE PLATE 4 STD KIT ZONE	PAIR
1,2A-7E,8-13A,14	116689	AXLE PLATE 5 STD KIT ZONE	PAIR
1,2A-7F,8-13A,14	116690	AXLE PLATE 6 STD KIT ZONE	PAIR
1,2A-7G,8-13A,14	116691	AXLE PLATE 7 STD KIT ZONE	PAIR
1,2A-7H,8-13A,14	116692	AXLE PLATE 8 STD KIT ZONE	PAIR
1,2A-7A,8-13B,14	116693	AXLE PLATE 1 SHRT KIT ZONE	PAIR

QUICK RELEASE AXLES MATRIX-Q7/QRI/ZONE

Wheel Type	Axle Type		Axle P/N	Spacer P/N
6 Spoke Mag Wheels	Quick Release	1A 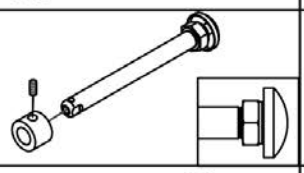	922356 Includes Spacer A=4 1/4”	2 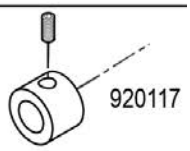 920117
	Quad Quick Release	1B 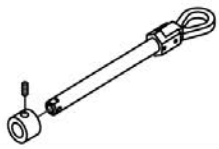	116390 Includes Spacer A=4 1/4”	2 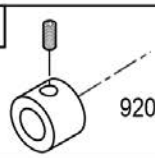 920117
Spinergy Wheels 18” Standard Spoke, Mountain Wheels, 5 Spoke Mag Wheels	Quick Release	1C 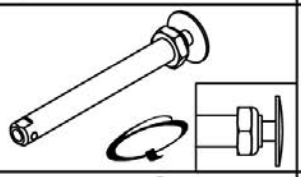	109385 A=4 1/2”	N/A
Ultra Light Wheels (N/A with Quad Quick Release)	Quick Release	1D 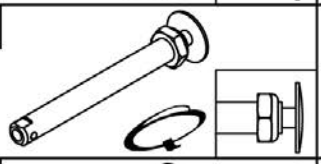	111843 A=4”	N/A
Lite Spoke	Quick Release	1E 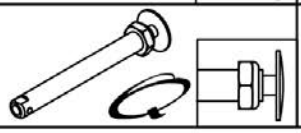	107268 A=4 1/4”	N/A

Quick Release Measuring Guide

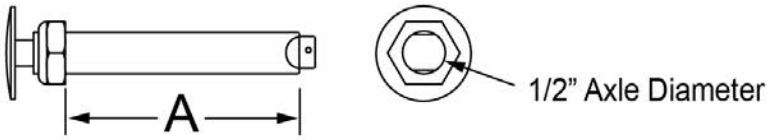

Pos.	Item Number	Description	Remarks
1A	922356	QR AXLE BIG BUTTON W/ SPACER	Includes spacer
1B	116390	QR AXLE W/SPACER FOR 6S MAG	Includes spacer
1C	109385	QR AXLE/NUT LONG BG BTTN	
1D	111843	QR AXLE EX SHORT BIG BTN	
1E	107268	QR AXLE AND NUT SHORT BIG BTTN	
2	920117	MAG SPACER 6S W/SET SCREW	

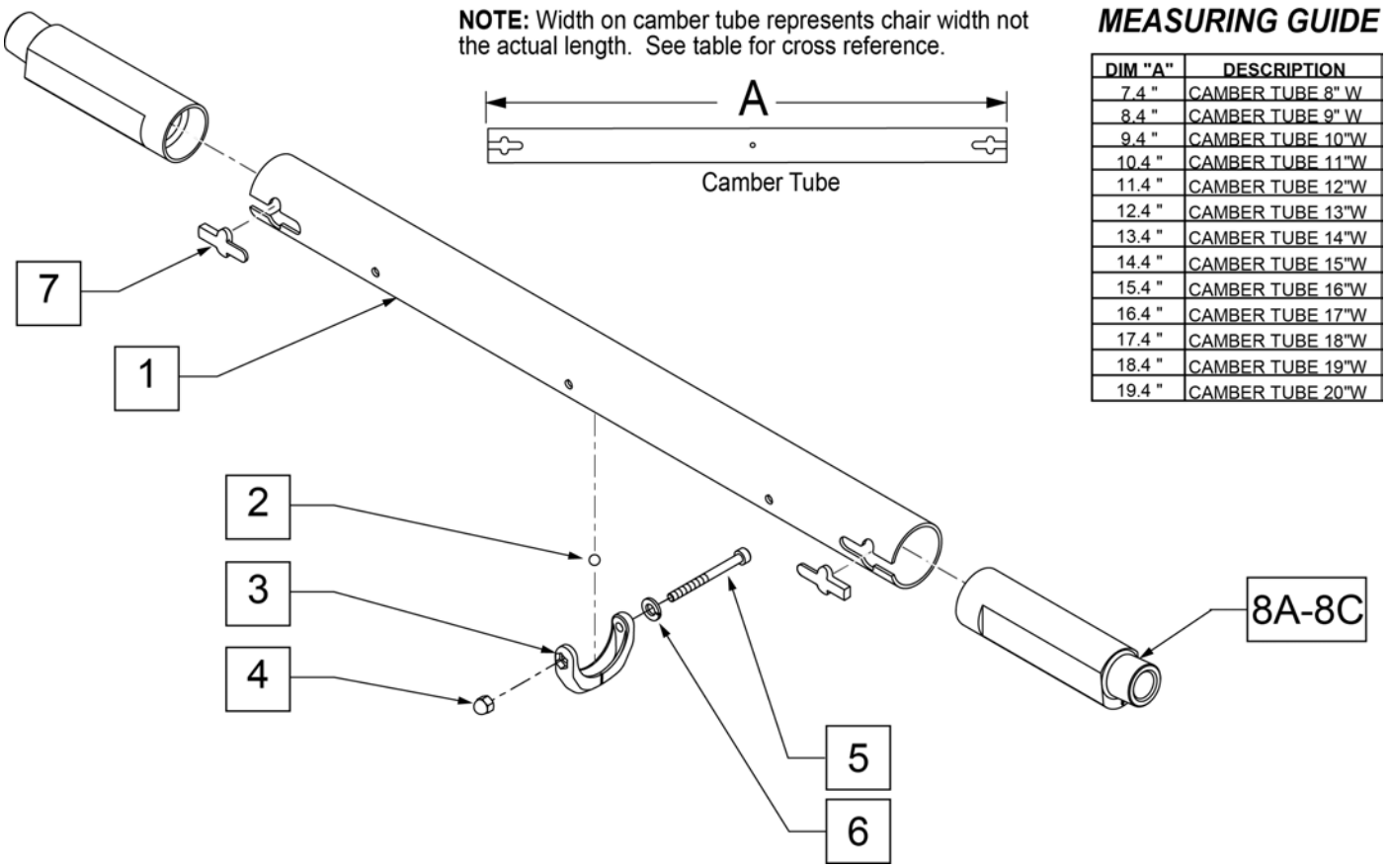

MEASURING GUIDE

DIM "A"	DESCRIPTION
7.4 "	CAMBER TUBE 8" W
8.4 "	CAMBER TUBE 9" W
9.4 "	CAMBER TUBE 10"W
10.4 "	CAMBER TUBE 11"W
11.4 "	CAMBER TUBE 12"W
12.4 "	CAMBER TUBE 13"W
13.4 "	CAMBER TUBE 14"W
14.4 "	CAMBER TUBE 15"W
15.4 "	CAMBER TUBE 16"W
16.4 "	CAMBER TUBE 17"W
17.4 "	CAMBER TUBE 18"W
18.4 "	CAMBER TUBE 19"W
19.4 "	CAMBER TUBE 20"W

Pos.	Item Number	Description	Remarks
1	113218	CAMBER TUBE 8"W	Zippie Zone only
1	113219	CAMBER TUBE 9"W	Zippie Zone only
1	110204	CAMBER TUBE 10"W	Zippie Zone only
1	110205	CAMBER TUBE 11"W	Zippie Zone only
1	110206	CAMBER TUBE 12"W	
1	110207	CAMBER TUBE 13"W	
1	110208	CAMBER TUBE 14"W	
1	110209	CAMBER TUBE 15"W	
1	110210	CAMBER TUBE 16"W	
1	110211	CAMBER TUBE 17"W	Q7 only
1	110212	CAMBER TUBE 18"W	Q7 only
1	110213	CAMBER TUBE 19"W	Q7 only
1	110214	CAMBER TUBE 20"W	Q7 only
2-6	050190	BEARING LEVEL CAMBER TUBE	
4	115918	M4 NUT ACORN PLASTIC BLACK	
5	102258	SHCS M4X.7X45 BLK W/PL ORG	
6	050129-002	LOCKWASHER HIGH COLLAR M4	
7	114428	CAMBER BLOCK KIT (10)	QTY 10
8A	110847	CAMBER PLUG 0 DEG	
8B	110848	CAMBER PLUG 3 DEG	
8C	110849	CAMBER PLUG 6 DEG	
1-8A	116694	CAMBER TUBE 8" W 0D ASSM	Zippie Zone only
1-8A	116695	CAMBER TUBE 9" W 0D ASSM	Zippie Zone only
1-8A	116696	CAMBER TUBE 10" W 0D ASSM	Zippie Zone only
1-8A	116697	CAMBER TUBE 11" W 0D ASSM	Zippie Zone only

Pos.	Item Number	Description	Remarks
1-8A	114401	CAMBER TUBE 12"W 0D ASSM	
1-8A	114402	CAMBER TUBE 13"W 0D ASSM	
1-8A	114403	CAMBER TUBE 14"W 0D ASSM	
1-8A	114404	CAMBER TUBE 15"W 0D ASSM	
1-8A	114405	CAMBER TUBE 16"W 0D ASSM	
1-8A	114406	CAMBER TUBE 17"W 0D ASSM	Q7 only
1-8A	114407	CAMBER TUBE 18"W 0D ASSM	Q7 only
1-8A	114408	CAMBER TUBE 19"W 0D ASSM	Q7 only
1-8A	114409	CAMBER TUBE 20"W 0D ASSM	Q7 only
1-8B	116698	CAMBER TUBE 8" W 3D ASSM	Zippie Zone only
1-8B	116699	CAMBER TUBE 9" W 3D ASSM	Zippie Zone only
1-8B	116700	CAMBER TUBE 10" W 3D ASSM	Zippie Zone only
1-8B	116701	CAMBER TUBE 11" W 3D ASSM	Zippie Zone only
1-8B	114410	CAMBER TUBE 12"W 3D ASSM	
1-8B	114411	CAMBER TUBE 13"W 3D ASSM	
1-8B	114412	CAMBER TUBE 14"W 3D ASSM	
1-8B	114413	CAMBER TUBE 15"W 3D ASSM	
1-8B	114414	CAMBER TUBE 16"W 3D ASSM	
1-8B	114415	CAMBER TUBE 17"W 3D ASSM	Q7 only
1-8B	114416	CAMBER TUBE 18"W 3D ASSM	Q7 only
1-8B	114417	CAMBER TUBE 19"W 3D ASSM	Q7 only
1-8B	114418	CAMBER TUBE 20"W 3D ASSM	Q7 only
1-8C	116702	CAMBER TUBE 8" W 6D ASSM	Zippie Zone only
1-8C	116703	CAMBER TUBE 9" W 6D ASSM	Zippie Zone only
1-8C	116704	CAMBER TUBE 10" W 6D ASSM	Zippie Zone only
1-8C	116705	CAMBER TUBE 11" W 6D ASSM	Zippie Zone only
1-8C	114419	CAMBER TUBE 12"W 6D ASSM	
1-8C	114420	CAMBER TUBE 13"W 6D ASSM	
1-8C	114421	CAMBER TUBE 14"W 6D ASSM	
1-8C	114422	CAMBER TUBE 15"W 6D ASSM	
1-8C	114423	CAMBER TUBE 16"W 6D ASSM	
1-8C	114424	CAMBER TUBE 17"W 6D ASSM	Q7 only
1-8C	114425	CAMBER TUBE 18"W 6D ASSM	Q7 only
1-8C	114426	CAMBER TUBE 19"W 6D ASSM	Q7 only
1-8C	114427	CAMBER TUBE 20"W 6D ASSM	Q7 only

Note: to ensure that the lights will function in the Micro Light Up Caster, qty 2 each of p/n 106947 will be required per caster when retrofitting Micro Light Up Casters to the chair.

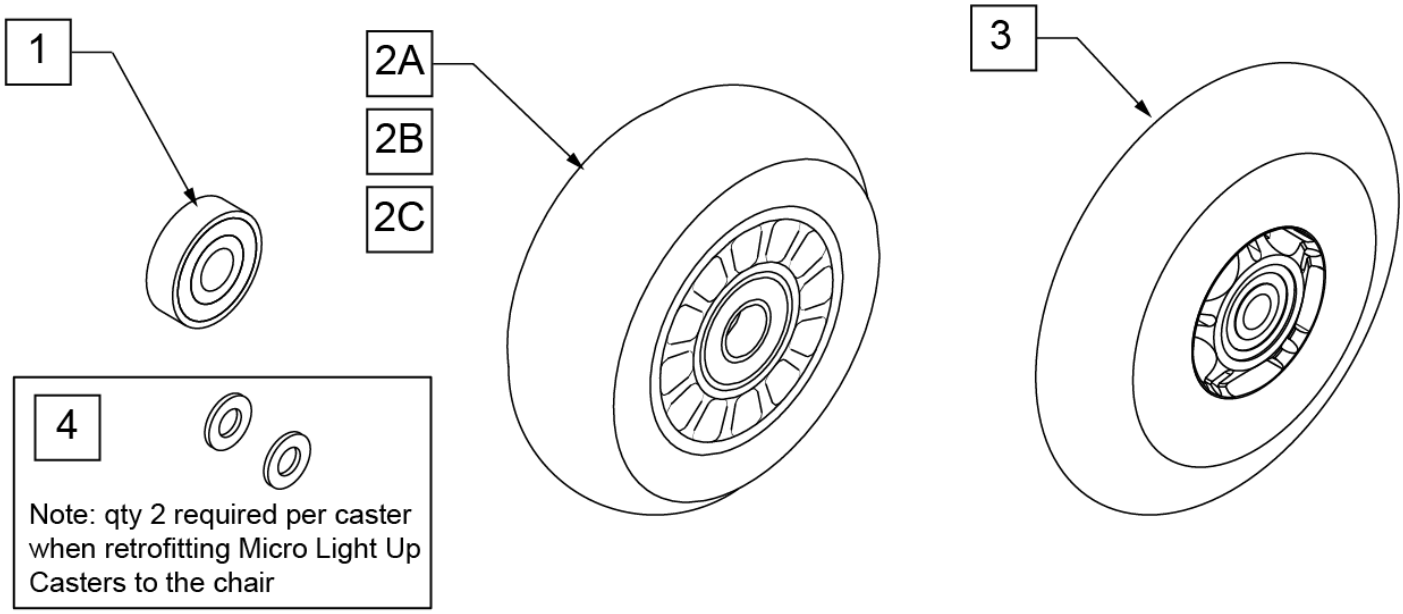

CASTER MEASURING GUIDE

PART NUMBER	"A" TIRE DIAMETER	"B" HUB WIDTH
400108	4.0	1.0
400107	3.0	1.0
052129	4.7	1.0

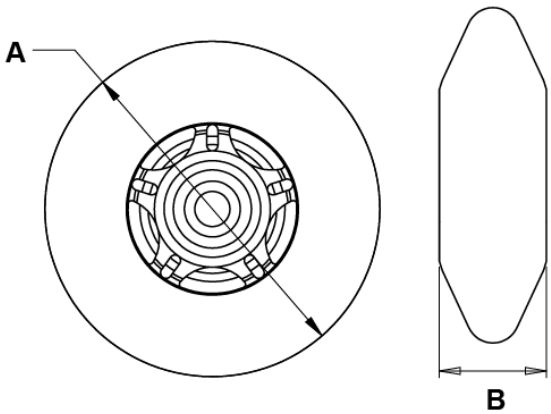

Pos.	Item Number	Description	HCPC	Remarks
1	349502	7/8"x 5/16" BEARING		
2A	400108	4" MICRO CASTER LIGHTED	K0077	4" MICRO LIGHTED
2B	920025	3" MICRO CASTER W/ BEARING -PAIR	K0077	PAIR 3" MICRO
2C	400107	3" MICRO CASTER LIGHTED	K0077	3" MICRO LIGHTED
3	052129	5" MICRO CASTER LIGHTED	K0077	5" MICRO LIGHTED
4	106947	WASHER FLAT THIN AN 5/16 ROH		

3 SPOKE CASTERS

NOTE: 7" and 8" Casters are not available with Integral Bearing Forks.

Note: When 6" casters or larger casters are used, Anti Flutter Kit must be installed. See Standard Multi Position Fork page.

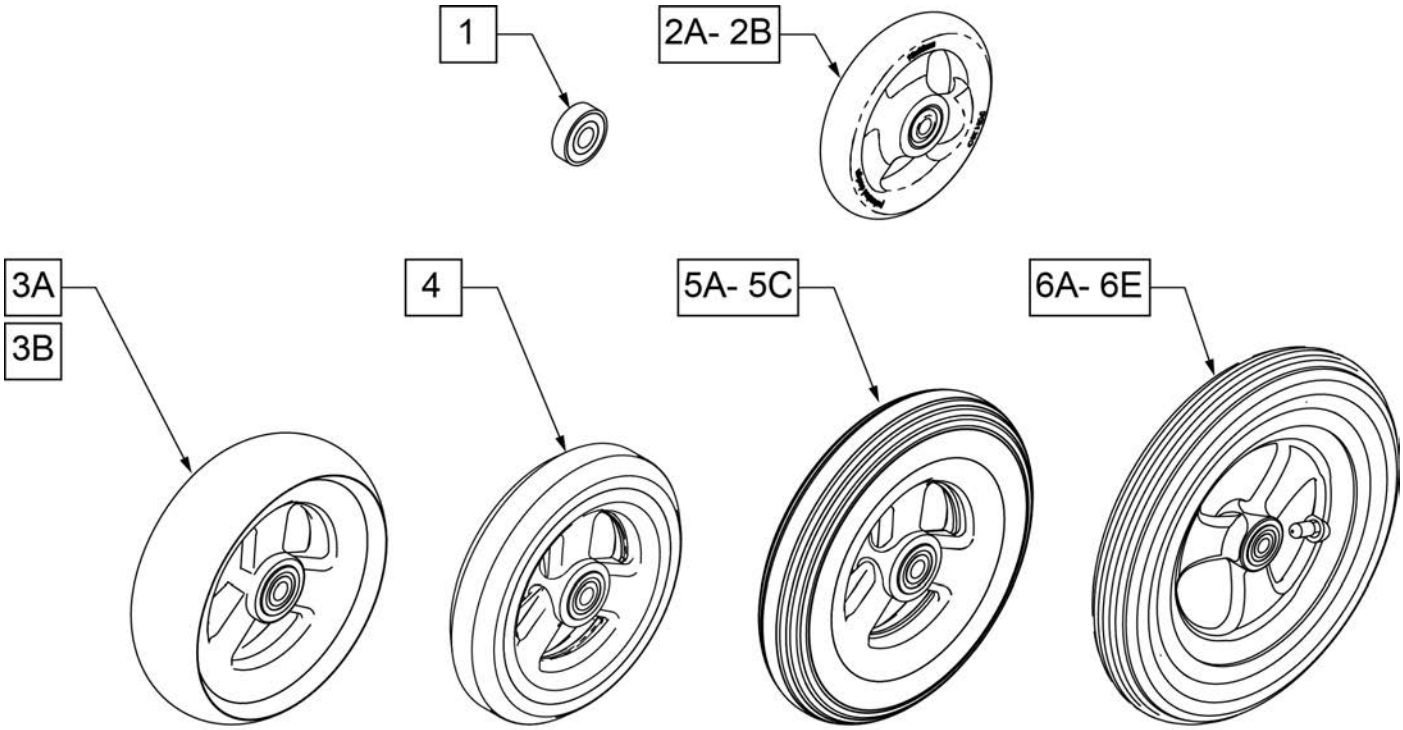

CASTER MEASURING GUIDE

PART NUMBER	"A" TIRE DIAMETER	"B" HUB WIDTH
101957	4.3	1.0
101098	4.0	1.0
101259	4.9	1.0
101255	5.7	1.0
101254	4.9	1.0

PART NUMBER	"A" TIRE DIAMETER	"B" HUB WIDTH
101256	5.75	1.0
101257	5.9	1.0
400212	8.0	1.0
400213	7.8	1.0
400214	6.9	1.0
400215	7.25	1.0

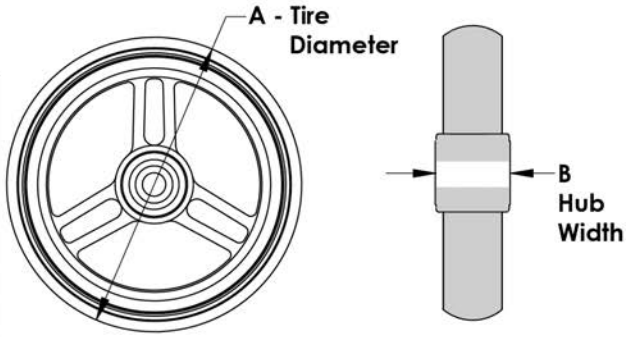

Pos.	Item Number	Description	Remarks
1	349502	7/8"x 5/16" BEARING	
2A	101957	4"X1-1/4 POLY 3 SPOKE CSTR	4" X 1.25 SEMI-PNEUMATIC
2B	101098	CASTER 4" PLASTIC/POLY W/BRG	4" LOW PROFILE POLY
3A	101259	5"X1-1/2" POLY 3 SPOKE CSTR	5" x 1.5" SEMI-PNEUMATIC
3B	101255	6"X1-1/2" POLY 3 SPOKE CSTR	6" x 1.5" SEMI-PNEUMATIC
4	101254	5" LOW POLY 3 SPOKE CASTER	5" LOW PROFILE POLY
5A	101256	6" SEMI PNEU 3 SPOKE CASTER	6" POLY
5B	101257	6" PNEUMATIC 3 SPOKE CASTER	6" PNEUMATIC
5C	383245	6" PNEUMATIC TIRE & TUBE	
6A	400212	CASTER 8" PNEU 3 SPK ASSM	8" PNEUMATIC
6B	400213	CASTER 8" POLY 3 SPK ASSM	8" POLY
6C	400214	CASTER 7" LOW POLY 3 SPK ASSM	7" x LOW PROFILE POLY
6D	383255	8" PNEUMATIC TIRE & TUBE	
6E	400215	CASTER 8" WIDE POLY 3 SPK ASSM	8" x 1.5" LOW POLY

SOFT ROLL CASTERS

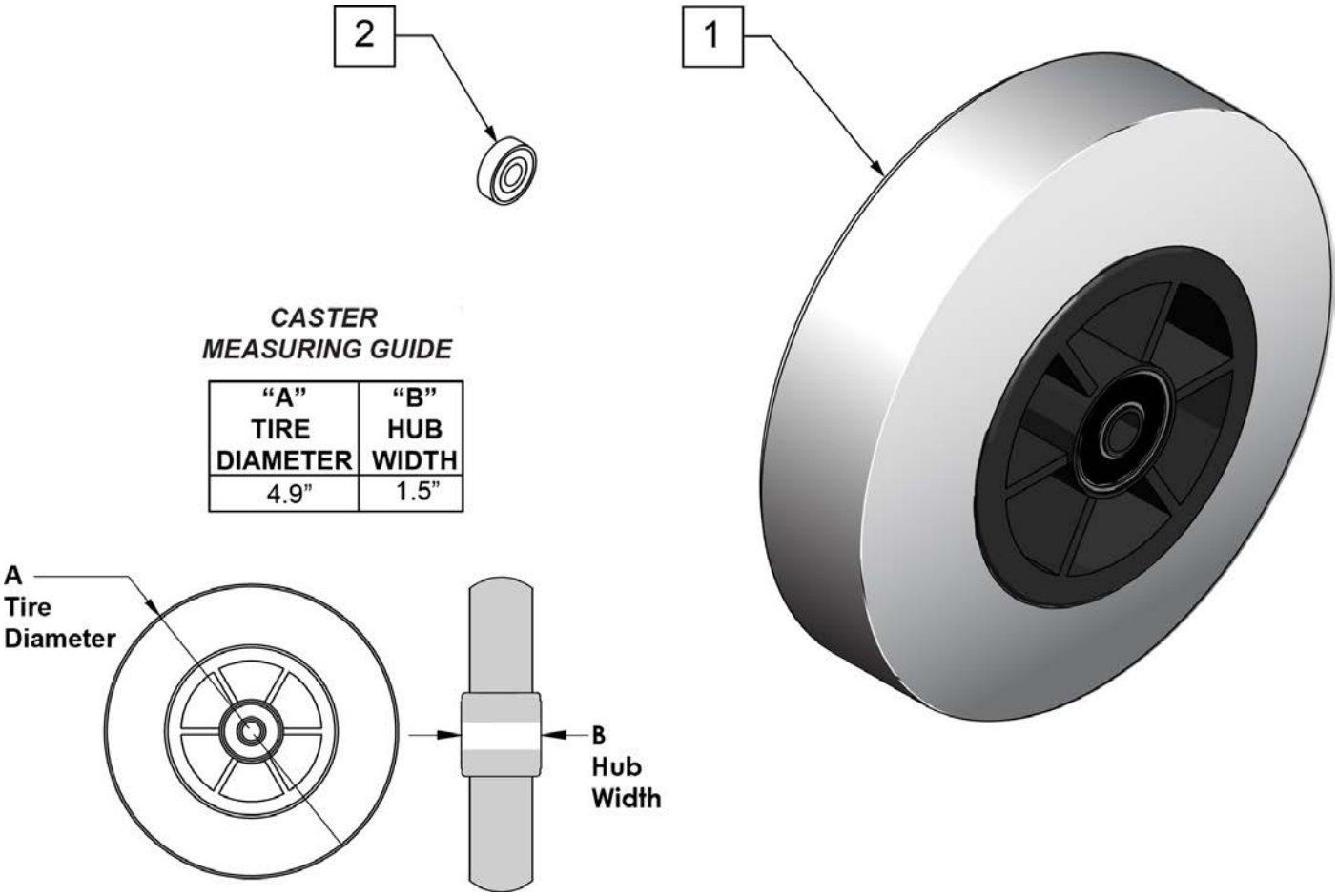

CASTER MEASURING GUIDE

"A" TIRE DIAMETER	"B" HUB WIDTH
4.9"	1.5"

Pos.	Item Number	Description	HCPC	Remarks
1	400103	CASTER 5" SOFT ROLL W/BRNGS	K0077	5" SOFT ROLL SEMI PNEU (GREY)
2	349502	7/8"x 5/16" BEARING		

Note: WHEEL CASTER 3" ULTRALITE SFTRLL no longer available as of April 22, 2020

SIDE VIEW

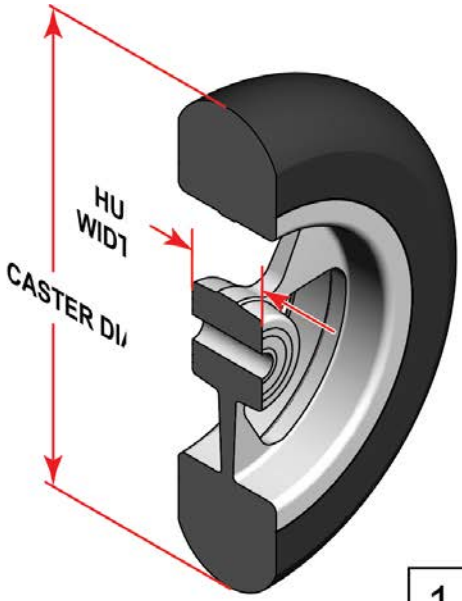

CASTER MEASURING GUIDE

TIRE DIAMETER	HUB WIDTH
3	1
4 1/8	1
5	1
6	1

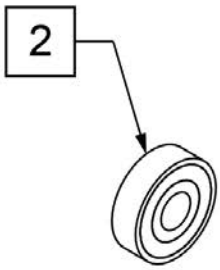

Pos.	Item Number	Description	HCPC	Remarks
1	251732	CASTR ASSM ULTRLT SFTRL 4X1.5"	K0077	4" x 1.5" Aluminum Soft Roll - Black Tire - Silver Hub
1	251733	CASTR ASSM ULTRLT SFTRL 5X1.5"	K0077	5" x 1.5" Aluminum Soft Roll - Black Tire - Silver Hub
1	251734	CASTR ASSM ULTRLT SFTRL 6X1.5"	K0077	6" x 1.5" Aluminum Soft Roll - Black Tire - Silver Hub
		ANODIZED		
1	162609S	WHL CSTR 4" ULTRALT SFTRL ANO		4" x 1.5" Aluminum Soft Roll - Black Tire - Anodized Hub
1	162611S	WHL CSTR 5" ULTRALT SFTRLL ANO		5" x 1.5" Aluminum Soft Roll - Black Tire - Anodized Hub
1	162613S	WHL CSTR 6" ULTRALT SFTRLL ANO		6" x 1.5" Aluminum Soft Roll - Black Tire - Anodized Hub
2	349502	7/8" X 5/16" BEARING		

STANDARD MULTIPLE POSITION FORK

Note: After S/N R4-019625 for Q7 and S/N RZ-007453 for Zone, Fork Stem Assembly was updated. Please replace in pairs if not previously replaced.

Note: If using 6" casters on Q7, Anti Flutter should be installed.

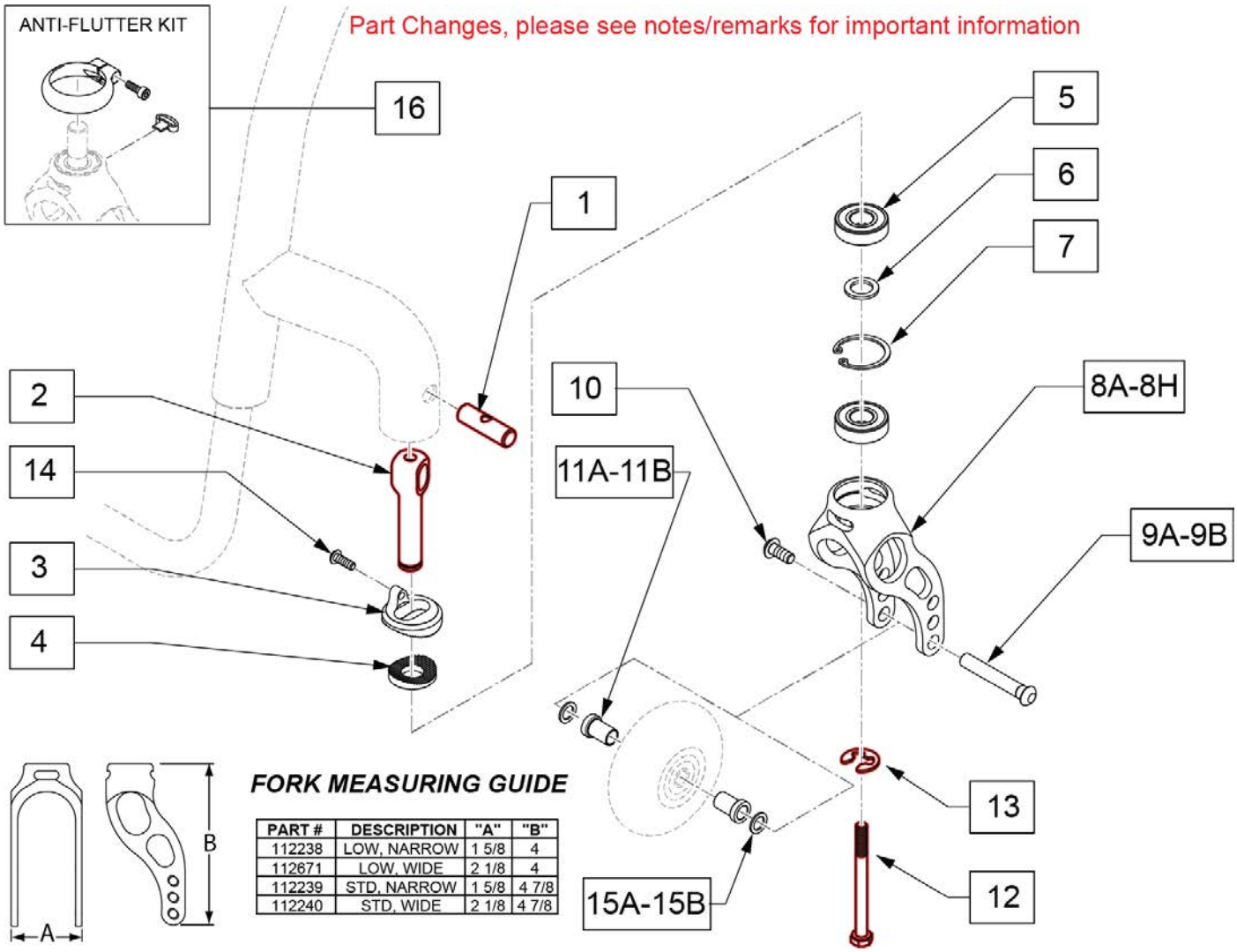

FORK MEASURING GUIDE

PART #	DESCRIPTION	"A"	"B"
112238	LOW, NARROW	1 5/8	4
112671	LOW, WIDE	2 1/8	4
112239	STD, NARROW	1 5/8	4 7/8
112240	STD, WIDE	2 1/8	4 7/8

Pos.	Item Number	Description	Remarks
1	123396	PIVOT PIN, SOLID	See Fork Stem & Pin Kits for orderable parts

Pos.	Item Number	Description	Remarks
2	123397	CASTER STEM, ADJ, HOLLOW	See Fork Stem & Pin Kits for orderable parts
3	110163	HELIUM COMBI SPLINE	
4	502051	SPLINE CASTER ANG ADJ LOWER	
5	349104	BRNG 28MM OD 12MM ID 8MM THK	
6	265162	WSHR FLT 18MM OD 12MM ID 1.5MM	
7	342093	RING SNAP INTERNAL 28MM	
5-7,8A	112238	ASSM FORK LOW NARROW INTG BRG	Black-Fits 3" Micro,3" Micro lighted,4' Low Profile Poly,4" Micro Lighted,4x1 Alu Poly
5-7,8B	112671	ASSM FORK LOW WIDE INTG BRG	Black-Fits 3x1.5 Alu Soft Roll,4x1.25 Semi Pneu,4x1.5 Alu Soft Roll
5-7,8C	112239	ASSM FORK STD NARROW INTG BRG	Black-Fits 5" Low Profile Poly,5" Micro Lighted
5-7,8D	112240	ASSM FORK STD WIDE INTG BRG	Black-Fits 5x1 Alu Poly, 5x1.5 Semi Pneu, 5' Soft Roll,5x1.5 Alu Soft Roll,6" Pneu, 6x1.5 Semi Pneu,6x1.5 Alu Soft Roll
5-7,8E	117172S	FORK LOW NRW CSTM ANO W/BRG	Choose custom anodized color-Fits 3" Micro,3" Micro lighted,4' Low Profile Poly,4" Micro Lighted,4x1 Alu Poly

Pos.	Item Number	Description	Remarks
5-7,8F	117173S	FORK LOW WD CSTM ANO W/BRG	Choose custom anodized color-Fits 3x1.5 Alu Soft Roll
5-7,8G	117174S	FORK STD NRW CSTM ANO W/BRG	Choose custom anodized color-Fits 5x1 Alu Poly
5-7,8H	117175S	FORK STD WD CSTM ANO W/BRG	Choose custom anodized color-Fits 5x1.5 Semi Pneu, 5' Soft Roll,5x1.5 Alu Soft Roll
9A	112783	AXLE CASTER NARROW 1/4"	Used w/ Narrow Forks Only.
9B	112782	AXLE CASTER WIDE 1/4"	Used w/ Wide Forks Only.
10	102259-001	BHCS M5 X 0.8 X 12 FULLNP	
11A	112781	SPACER, CASTER NARROW, INTEGRAL	Used w/ Narrow Forks Only.
11B	112780	SPACER, CASTER WIDE, INTEGRAL	Used w/ Wide Forks Only.
12	230063	HHCS M6 X 1.0 X 70	See Fork Stem & Pin Kits for orderable parts
13	114479	E-STYLE BOWED CLIP	See Fork Stem & Pin Kits for orderable parts
14	102257	BHCS M4 X .7 X 8 INORGANIC	
15A	107357	WASHER SPLIT LOCK M5 ROHS	
15B	106947	WASHER FLAT THIN AN 5/16 ROHS	Use w/ micro light casters only
16	120957	ANTI FLUTTER KIT W/ INSTR	Pair - Used on Standard Wide and Standard Narrow Fork only.

Pos.	Item Number	Description	Remarks
17	113403	6MM ALLEN WRENCH L, 7MM SHORT	Required to remove old stem bolt
1-8A,9A,10,11A-16	114429	FORK LOW NARROW Q7 ASSM	Black-Fits 3" Micro,3" Micro lighted,4' Low Profile Poly,4" Micro Lighted,4x1 Alu Poly
1-8B,9B,10,11B-16	114430	FORK LOW WIDE Q7 ASSM	Black-Fits 3x1.5 Alu Soft Roll,4x1.25 Semi Pneu,4x1.5 Alu Soft Roll
1-8C,9A,10,11A-16	114431	FORK STD NARROW Q7 ASSM	Black-Fits 5" Low Profile Poly,5" Micro Lighted,6" Pneu,6" Poly
1-8D,9B,10,11B-16	114432	FORK STD WIDE Q7 ASSM	Black-Fits 5x1 Alu Poly, 5x1.5 Semi Pneu, 5' Soft Roll,5x1.5 Alu Soft Roll, 6x1.5 Semi Pneu,6x1.5 Alu Soft Roll
1,2,12,13	124999	FORK STEM & PIN KIT PAIR	Pair
1,2,12,13	125045	FORK STEM & PIN KIT 1 SIDE	one side only
3,4,14	125046	FORK SPLINE ADJ KIT 1 SIDE	one side only

SINGLE SIDED MULTIPLE POSITION FORK

Note: After S/N R4-019625 for Q7 and S/N RZ-007453 for Zone, Fork Stem Assembly was updated. Please replace in pairs if not previously replaced.

Part Changes, please see notes/remarks for important information

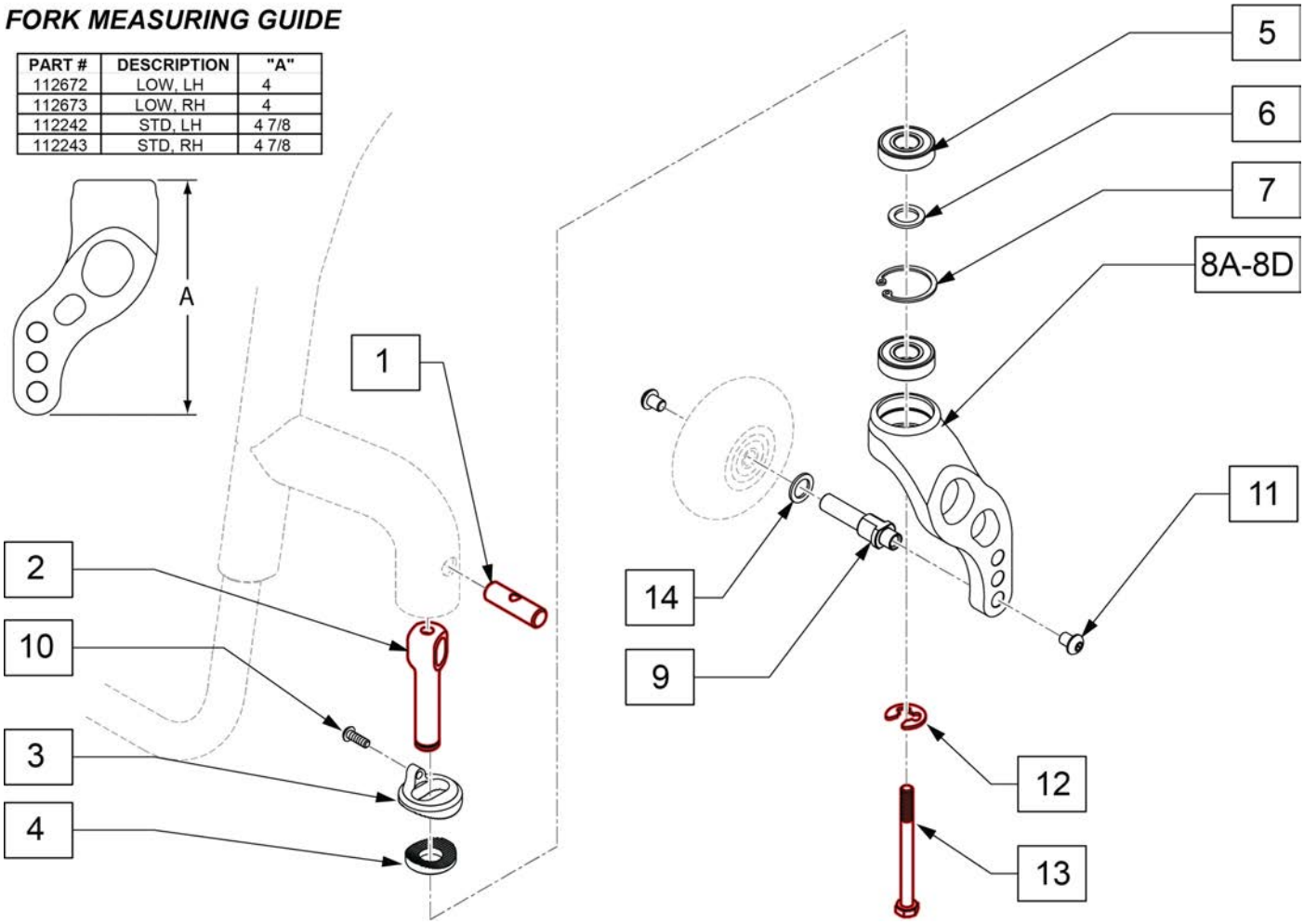

PART #	DESCRIPTION	"A"
112672	LOW, LH	4
112673	LOW, RH	4
112242	STD, LH	4 7/8
112243	STD, RH	4 7/8

Pos.	Item Number	Description	Remarks
1	123396	PIVOT PIN, SOLID	See Fork Stem & Pin Kits for orderable parts
2	123397	CASTER STEM, ADJ, HOLLOW	See Fork Stem & Pin Kits for orderable parts
3	110163	HELIUM COMBI SPLINE	
4	502051	SPLINE CASTER ANG ADJ LOWER	

Pos.	Item Number	Description	Remarks
5	349104	BRNG 28MM OD 12MM ID 8MM THK	
6	265162	WSHR FLT 18MM OD 12MM ID 1.5MM	
7	342093	RING SNAP INTERNAL 28MM	
5-8A	112672	ASSM FORK LOW SNGL SD LH W/BRG	Black-Fits 3" Micro,3" Micro lighted,4" Low Profile Poly,4" Micro Lighted,4x1 Alu Poly,3x1.5 Alu Soft Roll,4x1.25 Semi Pneu,4x1.5 Alu Soft Roll
5-8A	112673	ASSM FORK LOW SNGL SD RH W/BRG	Black-Fits 3" Micro,3" Micro lighted,4" Low Profile Poly,4" Micro Lighted,4x1 Alu Poly,3x1.5 Alu Soft Roll,4x1.25 Semi Pneu,4x1.5 Alu Soft Roll
5-8B	112242	ASSM FORK STD SNGL SD LH W/BRG	Black-Fits 5" Low Profile Poly,5" Micro Lighted,5x1 Alu Poly, 5x1.5 Semi Pneu, 5x1.5 Alu Soft Roll,6" Poly,6"Pneu, 6X1 Alu Poly, 6x1.5 Semi Pneu, 6x1.5 Alu Soft Roll
5-8B	112243	ASSM FORK STD SNGL SD RH W/BRG	Black-Fits 5" Low Profile Poly,5" Micro Lighted,5x1 Alu Poly, 5x1.5 Semi Pneu, 5x1.5 Alu Soft Roll,6" Poly, 6"Pneu, 6X1 Alu Poly, 6x1.5 Semi Pneu, 6x1.5 Alu Soft Roll

Pos.	Item Number	Description	Remarks
5-8C	117176S	FORK SNGL LOW CSTM ANO L	Choose custom anodized color-Fits 3" Micro,3" Micro lighted,4' Low Profile Poly,4" Micro Lighted,4x1 Alu Poly
5-8C	117177S	FORK SNGL LOW CSTM ANO R	Choose custom anodized color-Fits 3x1.5 Alu Soft Roll
5-8D	117178S	FORK SNGL STD CSTM ANO L	Choose custom anodized color-Fits 5x1 Alu Poly, 5x1.5 Semi Pneu, 5' Soft Roll,5x1.5 Alu Soft Roll
5-8D	117179S	FORK SNGL STD CSTM ANO R	Choose custom anodized color-Fits 5x1 Alu Poly, 5x1.5 Semi Pneu, 5' Soft Roll,5x1.5 Alu Soft Roll
9	112674	AXLE FORK SINGLE SIDE WIDE	
10	102257	BHCS M4 X .7 X 8 INORGANIC	
11	103185-005	BHCS M6X0.8X12 W/PL INORG	
12	114479	E-STYLE BOWED CLIP	See Fork Stem & Pin Kits for orderable parts
13	230063	HHCS M6 X 1.0 X 70	See Fork Stem & Pin Kits for orderable parts
14	106947	WASHER FLAT THIN AN 5/16 ROHS	Use w/ micro light casters only
15	113403	6MM ALLEN WRENCH L, 7MM SHORT	For adjusting stem bolt
1-8A,9-14	114434	FORK SS LOW Q7 L ASSM	Left
1-8A,9-14	114433	FORK SS LOW Q7 R ASSM	Right
1-8B,9-14	114436	FORK SS STD Q7 L ASSM	Left

Pos.	Item Number	Description	Remarks
1-8B,9-14	114435	FORK SS STD Q7 R ASSM	Right
1,2,12,13	124999	FORK STEM & PIN KIT PAIR	Pair
1,2,12,13	125045	FORK STEM & PIN KIT 1 SIDE	one side only
3,4,10	125046	FORK SPLINE ADJ KIT 1 SIDE	one side only

FROG LEG SUSPENSION FORK

Note: Item 10(Insert Tool) is used to aid in aligning the upper and lower fork assembly during Frog Leg assembly and elastomer replacement. See instruction sheet for details.

Note: After S/N R4-019625 for Q7 and S/N RZ-007453 for Zone, Fork Stem Assembly was updated. Please replace in pairs if not previously replaced.

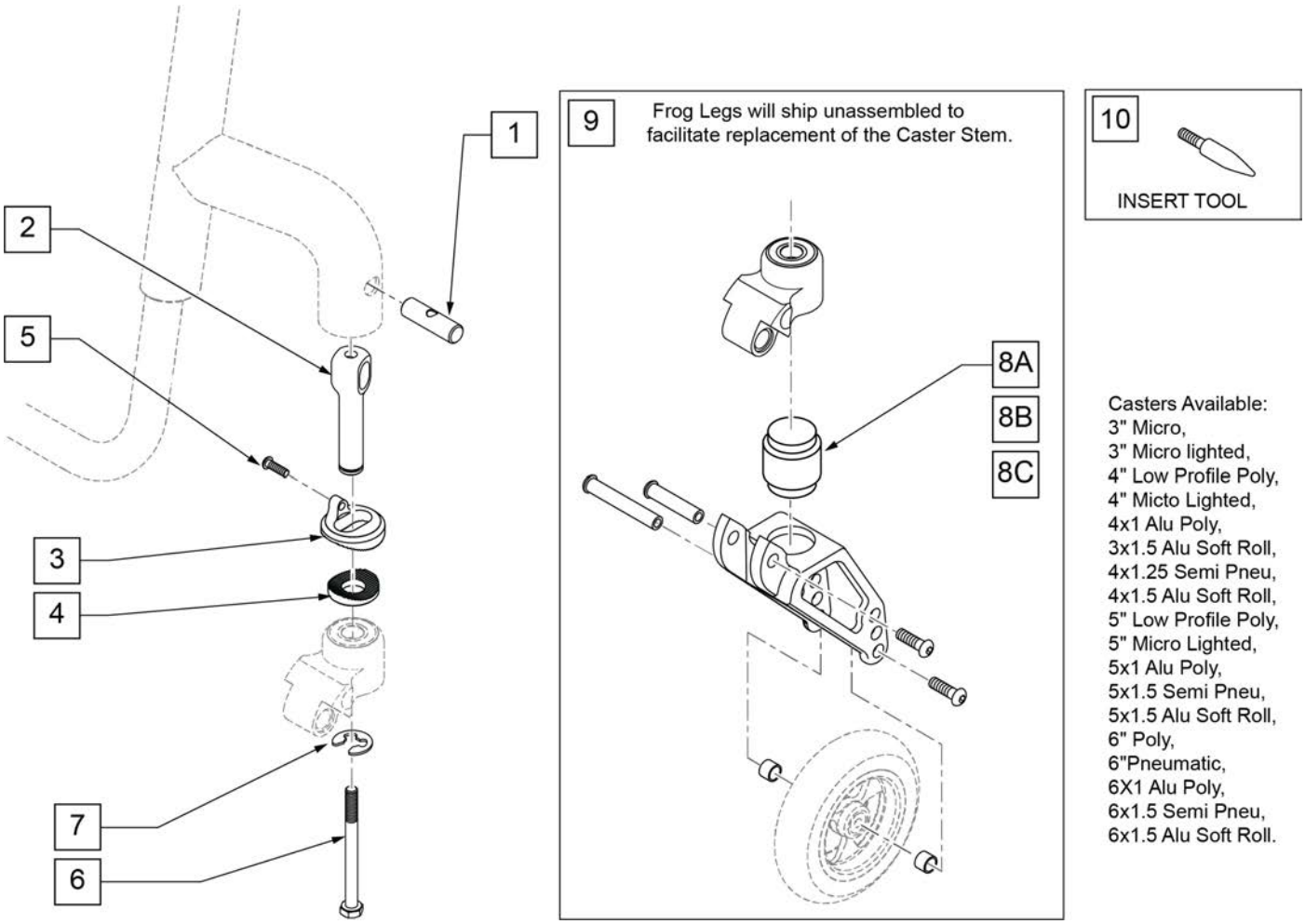

Pos.	Item Number	Description	Remarks
1	123396	PIVOT PIN, SOLID	See Fork Stem & Pin Kits for orderable parts
2	123397	CASTER STEM, ADJ, HOLLOW	See Fork Stem & Pin Kits for orderable parts
3	110163	HELIUM COMBI SPLINE	
4	502051	SPLINE CASTER ANG ADJ LOWER	
5	102257	BHCS M4 X .7 X 8 INORGANIC	
6	230063	HHCS M6 X 1.0 X 70	See Fork Stem & Pin Kits for orderable parts
7	114479	E-STYLE BOWED CLIP	See Fork Stem & Pin Kits for orderable parts
8A	050156-001	ELASTOMER FROGLEGS SOFT	0 -100 Lbs
8B	050156-002	ELASTOMER FROGLEGS MEDIUM	101 -190 Lbs
8C	050156-003	ELASTOMER FROGLEGS FIRM	191 -265 Lbs (not used w/ ZippieZone)
10	116351	FROG LEG FORK ASSEMBLY TOOL	
8A,9	050225-001	FORK FROGLEGS INT BRNG SOFT	

Pos.	Item Number	Description	Remarks
8B,9	050225-002	FORK FROGLEGS INT BRNG MED	
8C,9	050225-003	FORK FROGLEGS INT BRNG FIRM	
1-7,10	120025	FL CASTER STEM RPLC KIT	
1-7,8A,9	114437	FORK FROG SOFT Q7 ASSM	
1-7,8B,9	114438	FORK FROG MED Q7 ASSM	
1-7,8C,9	114439	FORK FROG FIRM Q7 ASSM	
1,2,6,7	124999	FORK STEM & PIN KIT PAIR	Pair
1,2,6,7	125045	FORK STEM & PIN KIT 1 SIDE	one side only
3-5	125046	FORK SPLINE ADJ KIT 1 SIDE	one side only

ANTI TIPS (ZIPPIE ZONE)

Note: If adding Anti-tips to a chair it is not required to order item 10 as it is included in the Camber Tube Clamp. During installation slide item 10 inward and insert item 7 in the outside of the clamp.

Note: As of S/N RZ-007126, the Anti Tip Reciever has been changed to a reversable style mount. Item 123437 includes 2 complete recievers with hardware.

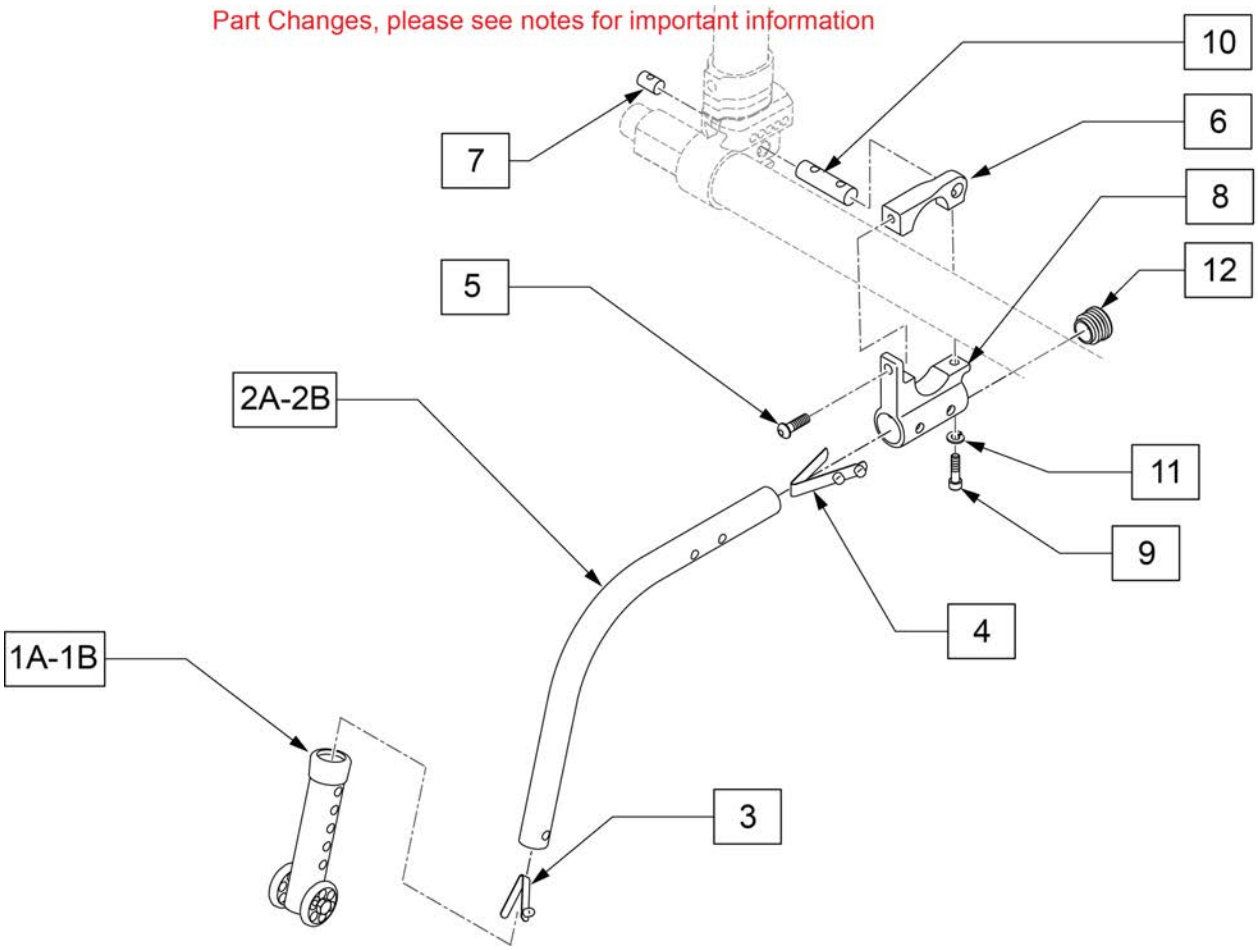

Pos.	Item Number	Description	Remarks
1A	104157	ANTI TIP ARM ADJUSTER	Used with 18",20, & 22" wheels
1B	104639	ANTI TIP ARM ADJ. MED	Used with 24" wheels
5	112346	BHCS,M6X1X16,FULL,PL	
7	112653	ROUND NUT SIZE 2	
9	102260-002	SHCS,M5 X .8 X 25,FULL,NP	
10	112655	ROUND NUT SIZE 4	
11	107357	WASHER SPLIT LOCK M5 ROHS	
12	560735	7/8 ROUND TUBE PLUG	
5-12	123437	ANTI TIP REC RVSBLE KIT	Pair w/hardware
1A,2A-4	116706	ANTI TIP ASSM W/ ADJ WHL L	Left-Used with 18" & 20" wheels
1A,2A-4	116707	ANTI TIP ASSM W/ ADJ WHL R	Right-Used with 18" & 20" wheels
1A,2B-4	116708	ANTI TIP ASSM W/ ADJ WHL L	Left-Used with 22" wheels
1A,2B-4	116709	ANTI TIP ASSM W/ ADJ WHL R	Right-Used with 22" wheels
1B,2C-4	116710	ANTI TIP ASSM W/ ADJ WHL L	Left-Used with 24" wheels
1B,2C-4	116711	ANTI TIP ASSM W/ ADJ WHL R	Right-Used with 24" wheels

DYNAMIC CENTER REAR CASTER

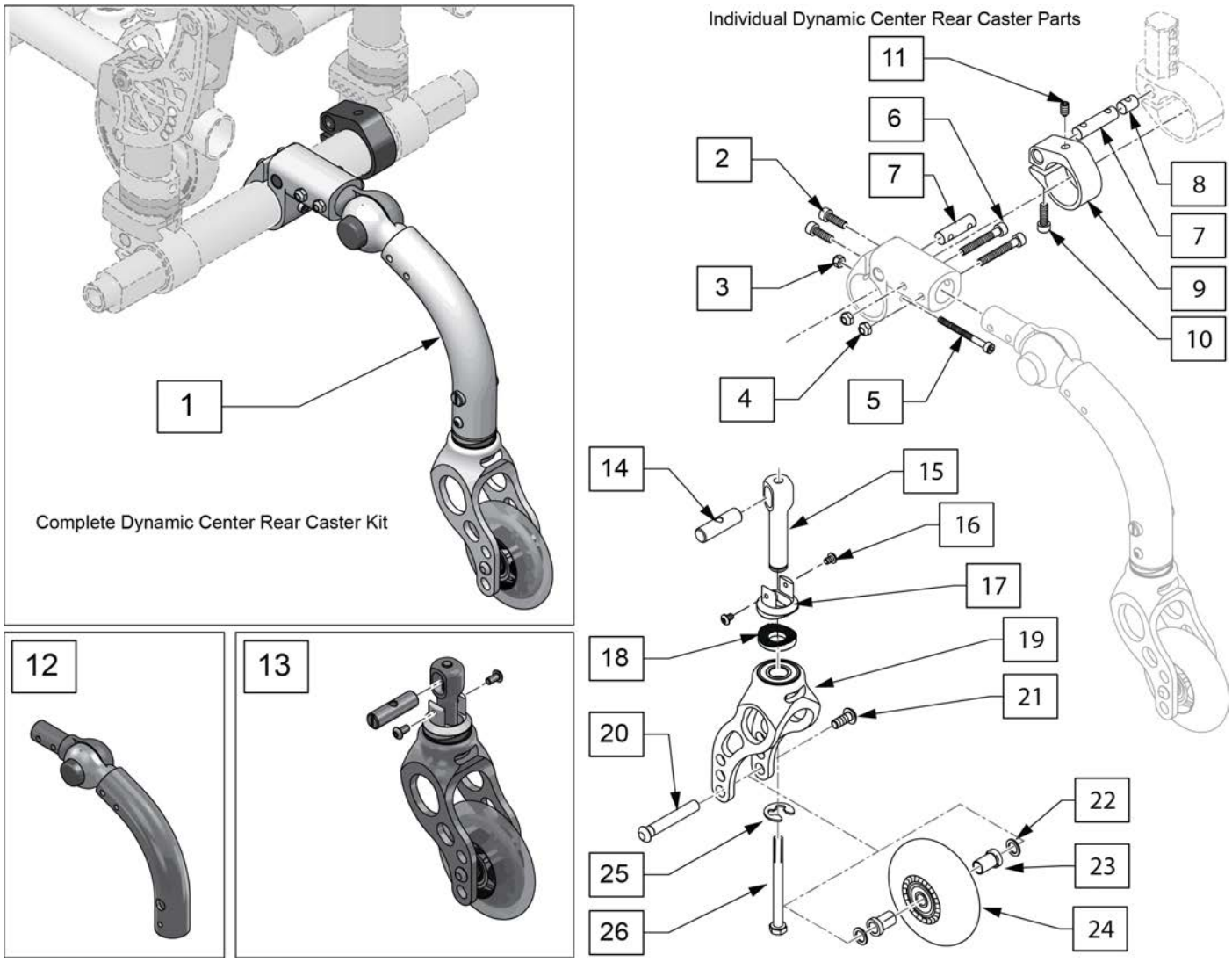

Pos.	Item Number	Description	Remarks
1	145132	18" DYN CNTER REAR CASTER	Fits chairs w/18" Wheels
1	145133	20" DYN CNTER REAR CASTER	Fits chairs w/20" Wheels
1	145134	22" DYN CNTER REAR CASTER	Fits chairs w/22" Wheels
1	145135	24" DYN CNTER REAR CASTER	Fits chairs w/24" Wheels
2	112341	SHCS, M5X.8X16, FULL, PL	
3	050136	NUT HEX NYLOCK M4	
4	220121	NUT HEX NYLOCK M5 BLACK	
5	102258	SHCS M4 X .7 X 45 PART, NP	
6	102260-003	SHCS, M5 X .8 X 35, PART, NP	
7	112655	ROUND NUT SIZE 4	
8	112653	ROUND NUT SIZE 2	
9	129431	CAMBER TUBE RESTRAINT COLLAR	
10	112341	SHCS, M5X.8X16, FULL, PL	
11	011825	SET SCREW M6X8MM CUP TIP	
12	145136	18 & 20 DYN CASTER ARM	Fits chairs w/18" or 20" Wheels
12	145138	22 & 24 DYN CASTER ARM	Fits chairs w/22" or 24" Wheels
13	145137	18 & 22 CASTER FORK KIT	Fits chairs w/18" or 22" Wheels
13	145139	20 & 24 CASTER FORK KIT	Fits chairs w/20" or 24" Wheels

Pos.	Item Number	Description	Remarks
14	123396	PIVOT PIN, SOLID	
15	123397	CASTER STEM, ADJ, HOLLOW	
16	102257	BHCS M4 x .7 x 8 INORGANIC	
17	502050	SPLINE CASTER ANGLE ADJ UPPER	
18	502051	SPLINE CASTER ANGLE ADJ LOWER	
19	112238	ASSM FORK LOW NARROW INTG BRG	
19	112239	ASSM FORK STD NARROW INTG BRG	
20	112783	AXLE CASTER NARROW 1/4"	
21	102259-001	BHCS,M5X0.8X12,FULL,PL	
22	106947	WASHER FLAT THIN AN 5/16 ROHS	
23	112781	SPACER, CASTER, NAR, INTEGRAL	
24	400109	3 INCH MICRO CSTR W/BRG BLK	
25	114479	E-STYLE BOWED CLIP	
26	230063	HHCS M6 X 1.0 X 70	

HIGH MOUNT PUSH WHEEL LOCK

Note: the Wheel Locks for Chair or Replacement Part orders shipped on or after 6/27/17 have upgraded mounting hardware; please replace in pairs for chairs ordered prior to 6/27/17.

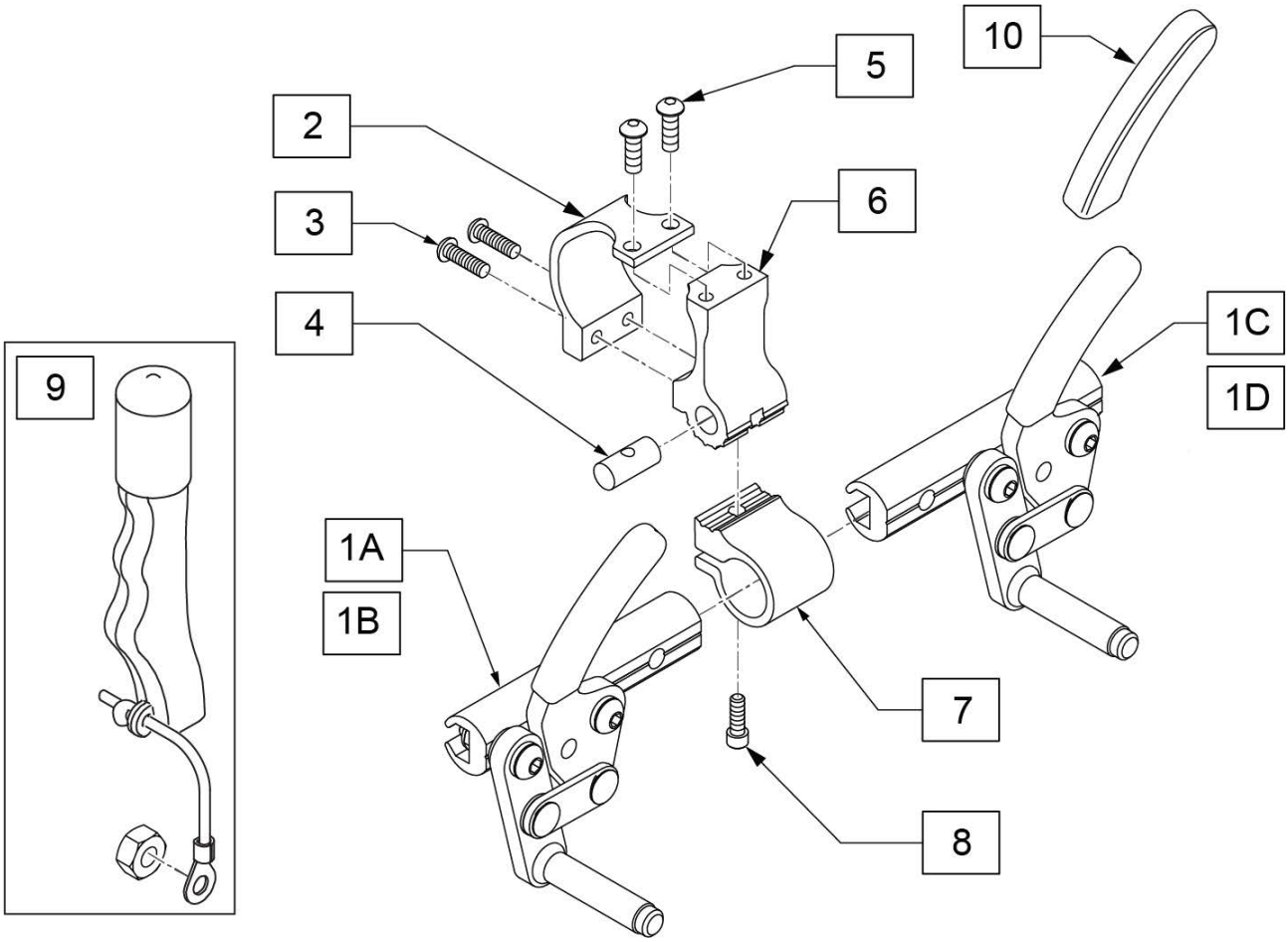

Pos.	Item Number	Description	Remarks
1A	104216-005	WHEEL LOCK PUSH R FWD LNG	RIGHT
1A	104216-006	WHEEL LOCK PUSH L FWD LNG	LEFT
1B	104216-001	WHEEL LOCK PUSH R FWD SHT	RIGHT
1B	104216-002	WHEEL LOCK PUSH L FWD SHT	LEFT
1C	104216-007	WHEEL LOCK PUSH R REV LNG	RIGHT
1C	104216-008	WHEEL LOCK PUSH L REV LNG	LEFT
1D	104216-003	WHEEL LOCK PUSH R REV SHT	RIGHT
1D	104216-004	WHEEL LOCK PUSH L REV SHT	LEFT
3	102259-002	BHCS M5 x 0.8 x 20 W/ PL INORG	
4	112652	ROUND NUT SIZE 1	
5	103184-002	BHCS M5X0.8X8 FULL PL	
8	113317	SHCS M5X0.8X25 FULL PL	
2-8	114441	WHEEL LOCK CLAMP KIT	For High Mount Wheel Lock
9	161929	WHEEL LOCK EXTENSION ASSY KIT	EACH
10	104141	COVER CURVED WHEEL LOCK VINYL	

Note: the Wheel Locks for Chair or Replacement Part orders shipped on or after 6/27/17 have upgraded mounting hardware; please replace in pairs for chairs ordered prior to 6/27/17.

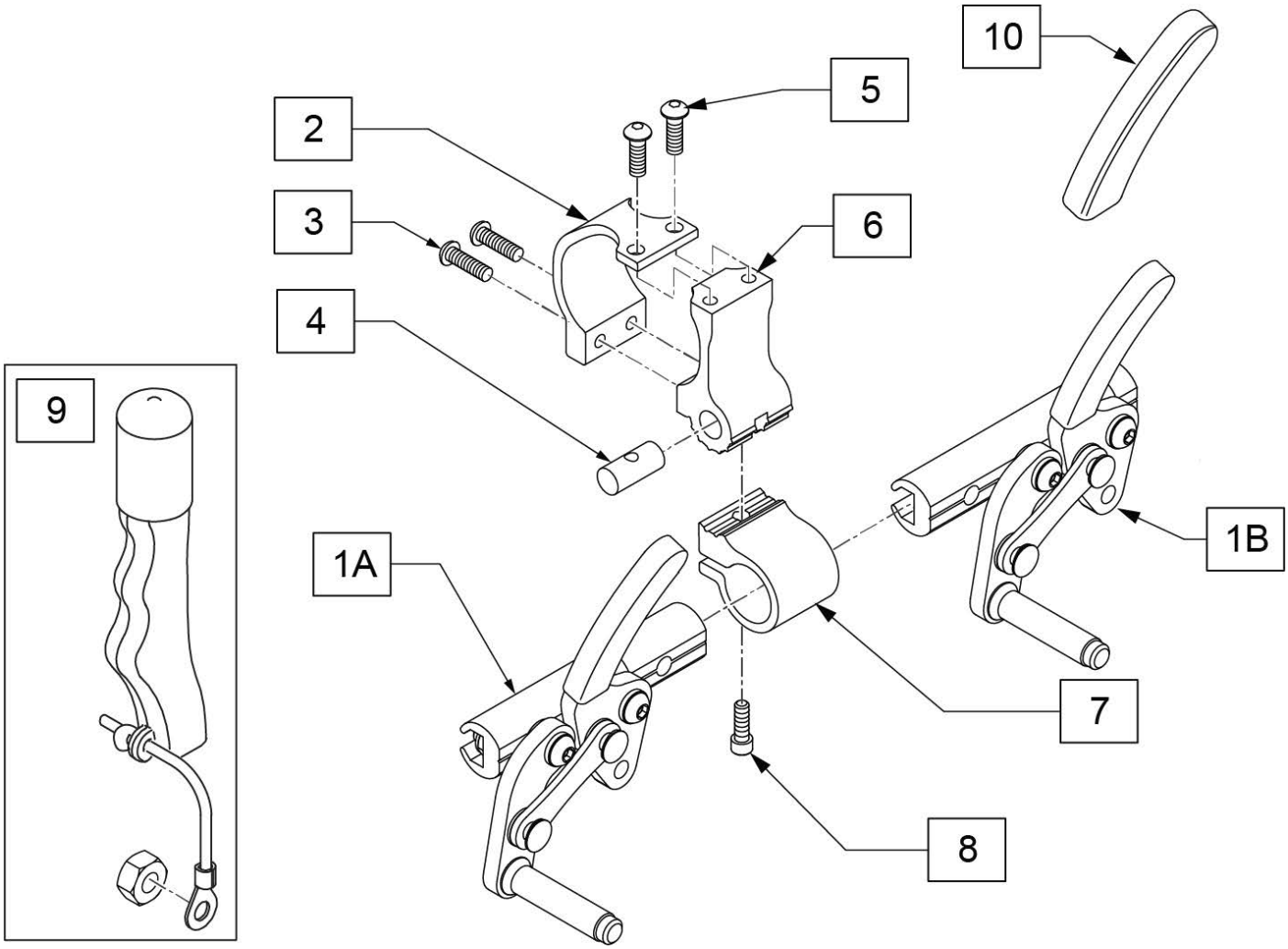

Pos.	Item Number	Description	Remarks
1A	104227-005	WHEEL LOCK PULL R FWD LNG	RIGHT
1A	104227-006	WHEEL LOCK PULL L FWD LNG	LEFT
1B	104227-007	WHEEL LOCK PULL R REV LNG	
1B	104227-008	WHEEL LOCK PULL L REV LNG	
3	102259-002	BHCS M5 x 0.8 x 20 W/ PL INORG	
4	112652	ROUND NUT SIZE 1	
5	103184-002	BHCS M5X0.8X8 FULL PL	
8	113317	SHCS M5X0.8X25 FULL PL	
2-8	114441	WHEEL LOCK CLAMP KIT	
9	161929	WHEEL LOCK EXTENSION ASSY KIT	EACH
10	104141	COVER CURVED WHEEL LOCK VINYL	

COMPACT WHEEL LOCK

Note: For all chairs shipped prior to 4/21/2021, both the left and right wheel locks and clamp kits are REQUIRED for installation.

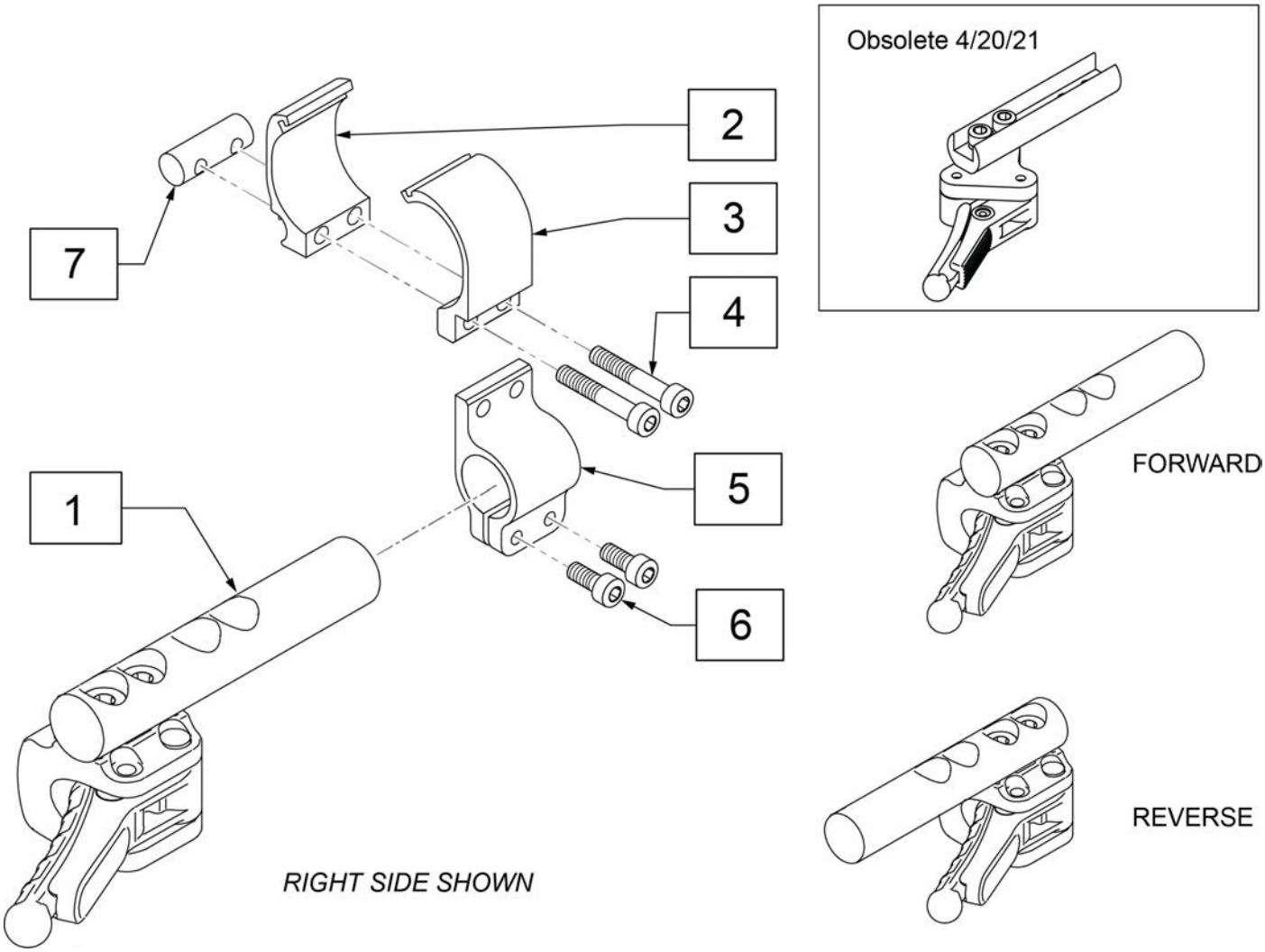

Pos.	Item Number	Description	Remarks
1	66006100-301	COMPACT BRAKE	Left side Forward Mounted
1	66006100-302	COMPACT BRAKE	Right side Forward Mounted
1	66006100-401	COMPACT BRAKE STD BACK LEFT	Reverse Mounted
1	66006100-402	COMPACT BRAKE STD BACK RIGHT	Reverse Mounted
2-7	76806005	FOOTREST CLAMP HEIGHT ADJ. CPL	
4,6,7	162470	COMPACT WHL LCK XE FASTENERS	

HUB LOCK - SEAT FRAME MOUNT

(09/05/2019]

Note: Hublock cannot be retrofitted to Zone chair unless new Side Frames are purchased. The hub lock yes option must be selected when you enter the side frame part number. This will ensure that the frames are manufactured with the rivnuts required to mount the hub lock levers.

HUB LOCK ASSEMBLY GUIDE

SEAT DEPTH	DESCRIPTION
8” & 9”	HUB LOCK ASSY XSHORT
10” & 11”	HUB LOCK ASSY SHORT
12” & 13”	HUB LOCK ASSY MEDIUM
14” & 15”	HUB LOCK ASSY LONG
16”, 17” & 18”	HUB LOCK ASSY XLONG

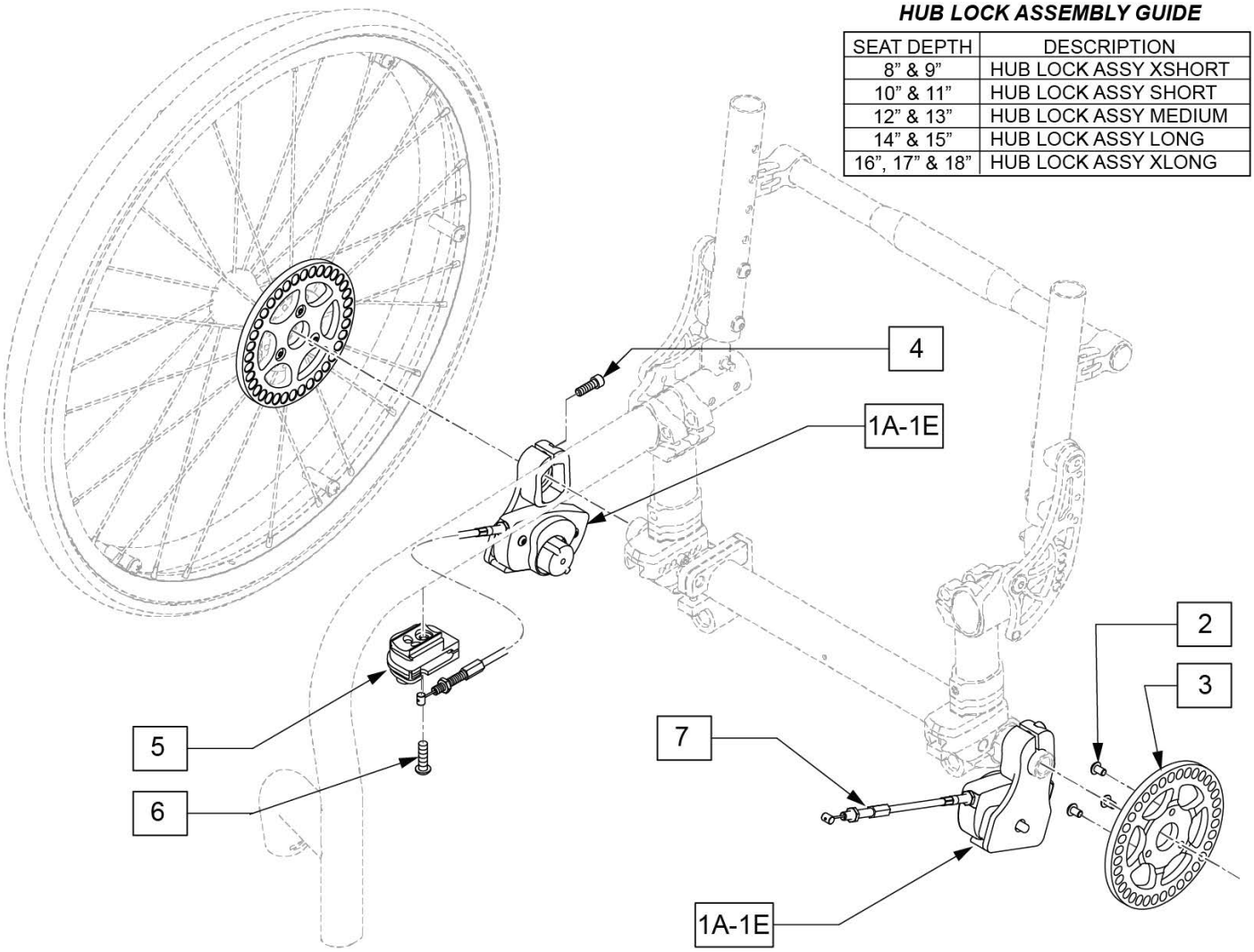

Pos.	Item Number	Description	Remarks
1A	116053	HUB LOCK ASSY XSHORT LH	LEFT -INCLUDES CABLE
1A	116054	HUB LOCK ASSY XSHORT RH	RIGHT-INCLUDES CABLE
1B	116055	HUB LOCK ASSY SHORT LH	LEFT -INCLUDES CABLE
1B	116056	HUB LOCK ASSY SHORT RH	RIGHT-INCLUDES CABLE
1C	116057	HUB LOCK ASSY MEDIUM LH	LEFT -INCLUDES CABLE
1C	116058	HUB LOCK ASSY MEDIUM RH	RIGHT-INCLUDES CABLE
1D	116059	HUB LOCK ASSY LONG LH	LEFT -INCLUDES CABLE
1D	116060	HUB LOCK ASSY LONG RH	RIGHT-INCLUDES CABLE
1E	116061	HUB LOCK ASSY XLONG LH	LEFT -INCLUDES CABLE
1E	116062	HUB LOCK ASSY XLONG RH	RIGHT-INCLUDES CABLE
2	103184-002	BHCS M5X0.8X8 FULL PL	
3	113347	LOCK PLATE SPOKE WHEEL	
4	104522	SHCS M6X1X16 FULL PL	
5	112426	ASSY LEVER HUB LOCK R	Right

Pos.	Item Number	Description	Remarks
5	112427	ASSY LEVER HUB LOCK L	Left
6	102259-002	BHCS M5 X .8 X 20 W/PL INORG	
7	111847-001	CABLE HUB LOCK SHT	
7	111847-007	CABLE HUB LOCK PED SHT	
7	111847-008	CABLE HUB LOCK PED MED	
7	111847-009	CABLE HUB LOCK PED LNG	
7	111847-010	CABLE HUB LOCK PED XL	
1A-7	116712	HUB LCK ST MNT KIT 8-9DP	
1B-7	116713	HUB LCK ST MNT KIT 10-11DP	
1C-7	116714	HUB LCK ST MNT KIT 12-13DP	
1D-7	116715	HUB LCK ST MNT KIT 14-15DP	
1E-7	116716	HUB LCK ST MNT KIT 16-18DP	

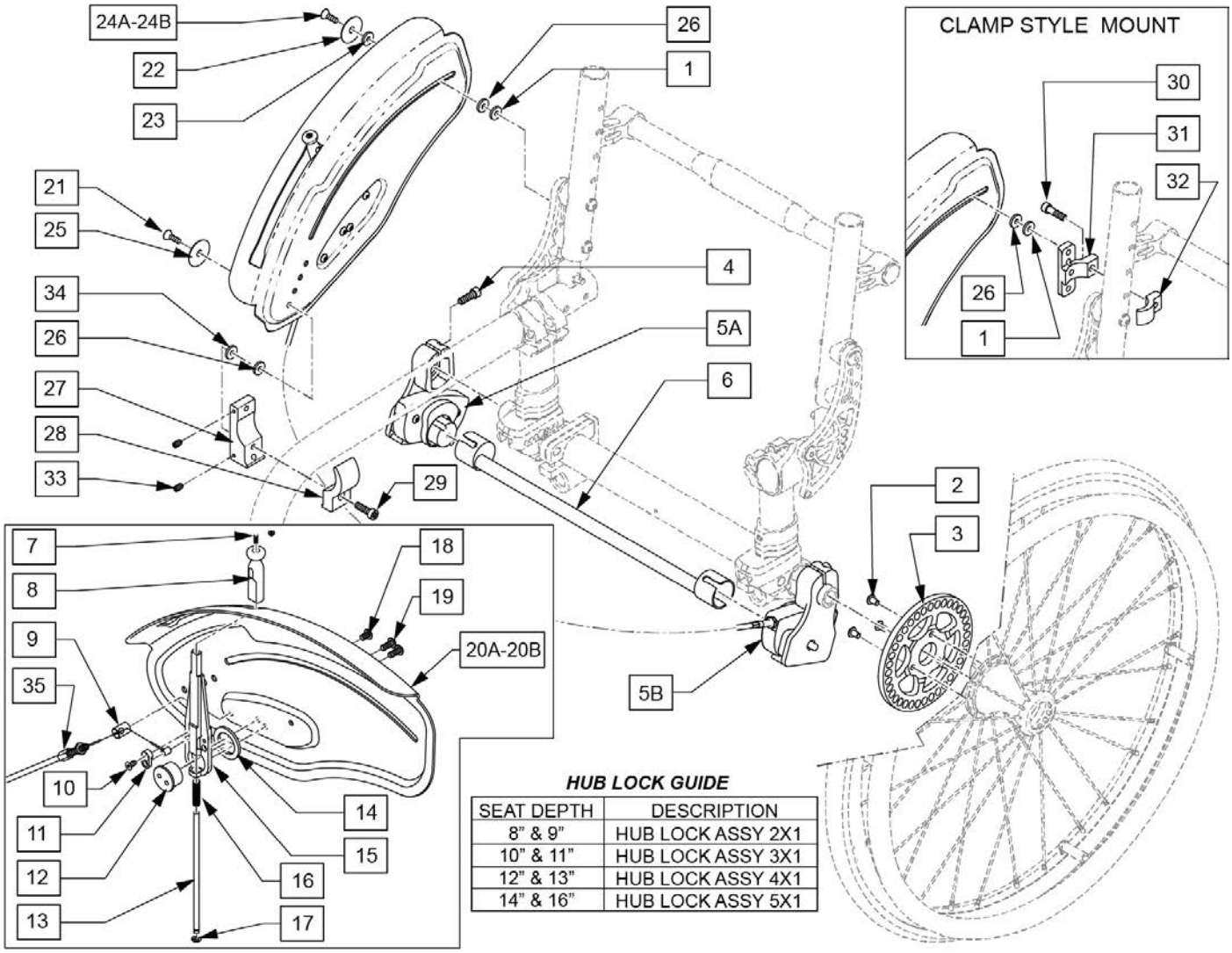

Pos.	Item Number	Description	Remarks
1	250104	WASHER FLAT M6	
2	103184-002	BHCS M5X0.8X8 FULL PL	
3	113347	LOCK PLATE SPOKE WHEEL	
4	104522	SHCS M6X1X16 FULL PL	
5A	116125	HUB LOCK ASSY 2Xl LH	includes cable
5A	116126	HUB LOCK ASSY 2XL RH	includes cable
5A	116127	HUB LOCK ASSY 3Xl LH	includes cable
5A	116128	HUB LOCK ASSY 3XL RH	includes cable
5A	115411	HUB LOCK ASSY 4Xl LH	includes cable
5A	115412	HUB LOCK ASSY 4XL RH	includes cable
5A	115414	HUB LOCK ASSY 5Xl LH	includes cable
5A	115415	HUB LOCK ASSY 5XL RH	includes cable
5B	116129	HUB LOCK ASSY NO CABLE RH	Used w/ right hand operated Hub Lock
5B	116130	HUB LOCK ASSY NO CABLE LH	Used w/ left hand operated Hub Lock
6	116233	WLDMNT HUB LCK CROSS TUBE 8W	
6	116234	WLDMNT HUB LCK CROSS TUBE 9W	
6	116235	WLDMNT HUB LCK CROSS TUBE 10W	
6	116236	WLDMNT HUB LCK CROSS TUBE 11W	
6	116237	WLDMNT HUB LCK CROSS TUBE 12W	

Pos.	Item Number	Description	Remarks
6	116238	WLDMNT HUB LCK CROSS TUBE 13W	
6	116239	WLDMNT HUB LCK CROSS TUBE 14W	
6	116240	WLDMNT HUB LCK CROSS TUBE 15W	
6	116241	WLDMNT HUB LCK CROSS TUBE 16W	
6	116242	WLDMNT HUB LCK CROSS TUBE 17W	
7	103497-003	FHCS,M3X.05X12,FULL,NP	
8	115398	S/G WHEEL LOCK HANDLE	
9	115930	CABLE RECEIVER S/G	
10	115769	FHCS, M4X0.7X10 FULL PL	
11	115766	WHEEL LOCK CABLE REC.	
12	115394	LEVER HUB	
13	115397	LEVER STEEL INSERT	
14	115395	WASHER THICK	
15	115393	S/G WHEEL LOCK LEVER	
16	115399	SPRING LEVER	
17	115400	3/16 E-CLIP	
18	103184-002	BHCS,M5X0.8X8, FULL,PL	
19	112338	BHCS,M5X0.8X14,FULL,PL	
20A	115763S	SIDE GUARD AL LVR SLT RH	Right side w/hole for lever
20A	115764S	SIDE GUARD AL LVR SLT LH	Left side w/hole for lever
20B	113271S	SIDE GUARD AL W/F PED LH	Right side w/o hole for lever
20B	113274S	SIDE GUARD AL W/F PED RH	Left side w/o hole for lever
21	113360	FH C/S M6 x 1 x 25 FULL PL	
22	000 138 014	PLASTIC SPACER	
23	115220	SIDE GUARD SLIDE BUSHING	
24A	102265-002	M6 x 1 x 20 FH C/S FULL PL	Used w/Standard Mount
24B	113318	FHCS, M6X1X16, FULL, PL	Used w/Clamp Mount
25	000 138 017	ALUMINUM SPACER	
26	561026	3/4" WASHER 1/4" HOLE	
27	111844	MOUNT SIDE GUARD OVAL FRM	
28	111693	SPHA RECEIVER CLAMP	
29	102263-003	SHCS, M6 x 1 x 25, FULL, PL	
30	102263-005	SHCS, M6 x 1 x 20, FULL, PL	
31	113299	AL SIDE GUARD REAR REC	
32	113301	AL SIDE GUARD CLAMP	
33	102109	SET SCREW M4X.7X6 NYLON PT	
34	561112	3/4 OD X .318 ID X .25 NYLON	
35	111847-003	CABLE HUB LOCK LNG	
35	111847-004	CABLE HUB LOCK XL	
35	116123	CABLE HUB LOCK PED XXL	
35	116124	CABLE HUB LOCK PED XXXL	
1-35	116922S	8W AL R FNDR/PULL HUB LK 0CMB	
1-35	116923S	9W AL R FNDR/PULL HUB LK 0CMB	
1-35	116924S	10W AL R FNDR/PULL HUB LK 0CMB	
1-35	116925S	11W AL R FNDR/PULL HUB LK 0CMB	
1-35	116926S	12W AL R FNDR/PULL HUB LK 0CMB	
1-35	116927S	13W AL R FNDR/PULL HUB LK 0CMB	
1-35	116928S	14W AL R FNDR/PULL HUB LK 0CMB	
1-35	116929S	15W AL R FNDR/PULL HUB LK 0CMB	
1-35	116930S	16W AL R FNDR/PULL HUB LK 0CMB	
1-35	116931S	8W AL L FNDR/PULL HUB LK 0CMB	
1-35	116932S	9W AL L FNDR/PULL HUB LK 0CMB	
1-35	116933S	10W AL L FNDR/PULL HUB LK 0CMB	
1-35	116934S	11W AL L FNDR/PULL HUB LK 0CMB	
1-35	116935S	12W AL L FNDR/PULL HUB LK 0CMB	
1-35	116936S	13W AL L FNDR/PULL HUB LK 0CMB	
1-35	116937S	14W AL L FNDR/PULL HUB LK 0CMB	

Pos.	Item Number	Description	Remarks
1-35	117068S	15W AL L FNDR/PULL HUB LK 0CMB	
1-35	116939S	16W AL L FNDR/PULL HUB LK 0CMB	
1-35	116940S	8W AL R FNDR/PULL HUB LK 3CMB	
1-35	116941S	9W AL R FNDR/PULL HUB LK 3CMB	
1-35	116942S	10W AL R FNDR/PULL HUB LK 3CMB	
1-35	116943S	11W AL R FNDR/PULL HUB LK 3CMB	
1-35	116944S	12W AL R FNDR/PULL HUB LK 3CMB	
1-35	116945S	13W AL R FNDR/PULL HUB LK 3CMB	
1-35	116946S	14W AL R FNDR/PULL HUB LK 3CMB	
1-35	116947S	15W AL R FNDR/PULL HUB LK 3CMB	
1-35	116948S	16W AL R FNDR/PULL HUB LK 3CMB	
1-35	116949S	8W AL L FNDR/PULL HUB LK 3CMB	
1-35	116950S	9W AL L FNDR/PULL HUB LK 3CMB	
1-35	116951S	10W AL L FNDR/PULL HUB LK 3CMB	
1-35	116952S	11W AL L FNDR/PULL HUB LK 3CMB	
1-35	116953S	12W AL L FNDR/PULL HUB LK 3CMB	
1-35	116954S	13W AL L FNDR/PULL HUB LK 3CMB	
1-35	116955S	14W AL L FNDR/PULL HUB LK 3CMB	
1-35	116956S	15W AL L FNDR/PULL HUB LK 3CMB	
1-35	116957S	16W AL L FNDR/PULL HUB LK 3CMB	

TRADITIONAL 6 SPOKE MAG

Note: this wheel utilizes Screw Mount Handrims - the handrim has a threaded hole that mounts the handrim to the wheel through a spacer and fastener.

Note: if Mag Wheel Assembly was ordered without Handrim and a Handrim is added to the wheel, qty 6 of 101932 and 281175 ARE REQUIRED to properly mount the handrim.

Note: if changing the Rear Wheel Size on a chair with Anti-tips, new size Anti-tip Assemblies ARE REQUIRED to accommodate the new Rear Wheel Size.

Note: for Zippie X'Cape 6 Spoke Mags are only available with the One Arm Drive.

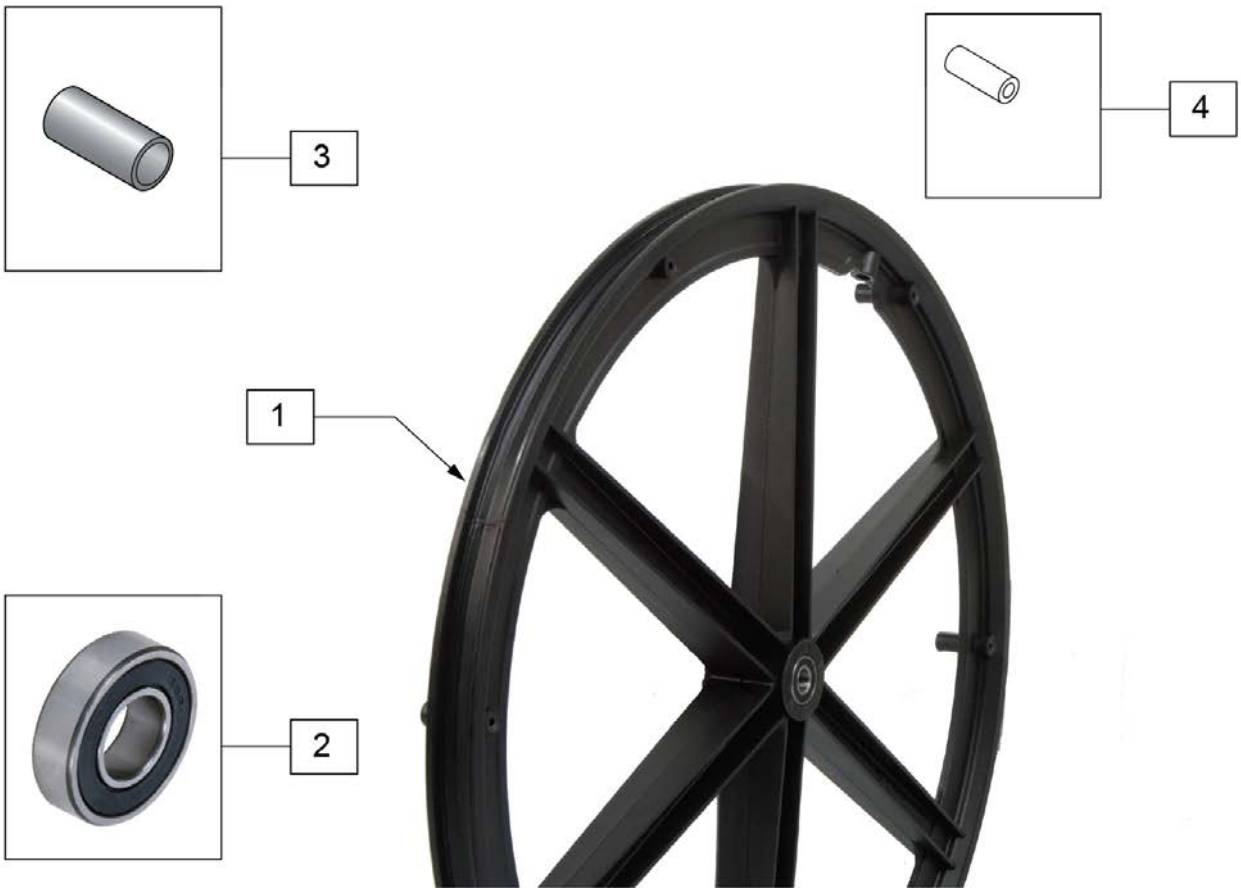

Pos.	Item Number	Description	Remarks
1-3	401094	20" MAG W/BRNG 6 SPOKE	20"
1-3	401093	22" MAG W/BRNG 6 SPOKE	22"(501mm)
1-3	401092	24" MAG W/BRNG 6 SPOKE	24"(540mm)
2	349500	1 1/8 X 1/2 BEARING	
3	521564	MAG BEARING SPACER	
4	101932	SPCR .194ID X .375 OD X .750	Used when previously ordered with Omit handrims or Natural Fit Handrims

Note: this wheel utilizes Screw Mount Handrims - the handrim has a threaded hole that mounts to the wheel through a spacer and fastener.

Note: if changing the Rear Wheel Size on a chair with Anti-tips, new size Anti-tip Assemblies ARE REQUIRED to accommodate the new Rear Wheel Size.

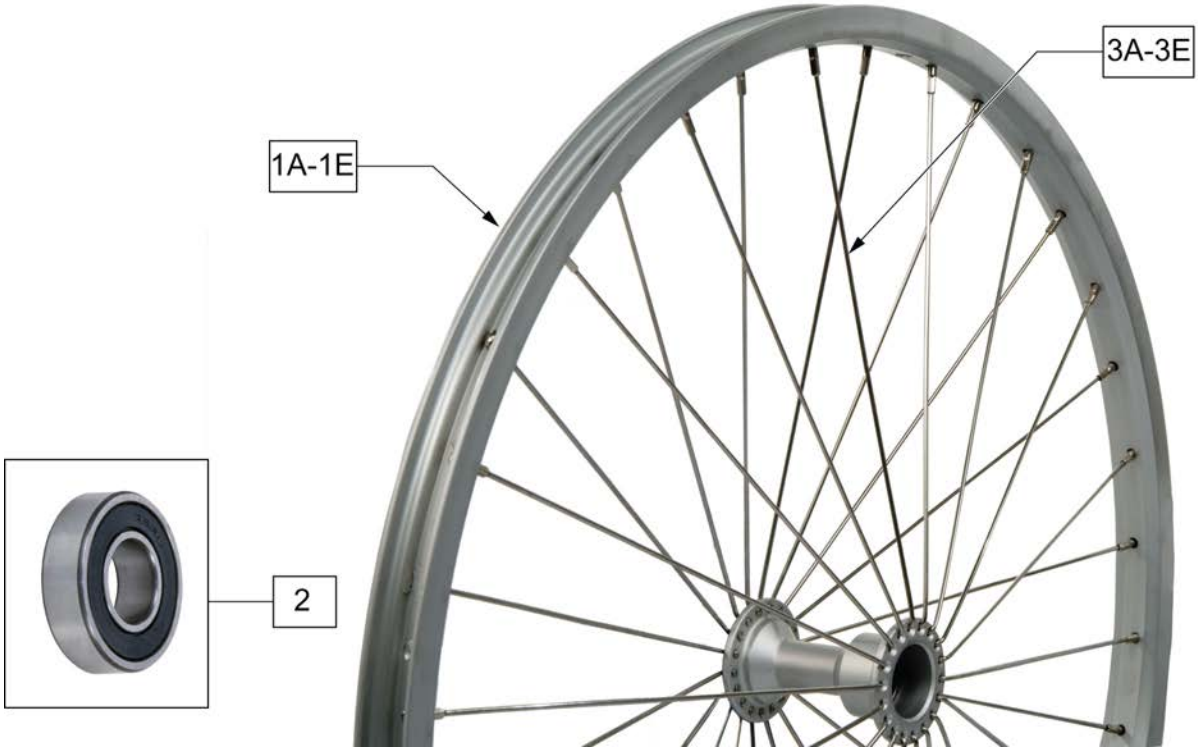

Pos.	Item Number	Description	Remarks
1A	401001	WHEEL ASSM PUSH BUTTON 18"	18"
1B	401070	20" RIM ASSM PUSH BUTTON	20"
1C	401072	22" RIM ASSM PUSH BUTTON	22"(501mm)
1D	401074	24" RIM ASSM PUSH BUTTON	24"(540mm)
1E	401077	26IN RIM ASSM PUSH BUTTON	26"(590mm)
2	349500	1 1/8 X 1/2 BEARING	
3A	362247	SPOKE 154MM X 2.0MM	
3B	362250	QP SPOKE 201MM X 2.0MM	
3C	362275	QP SPOKE 226MM X 2.0MM	
3D	362300	QP SPOKE 244MM X 2.0MM	
3E	362325	QP SPOKE 270MM X 2.0MM	

5 SPOKE MAG

Note: 5 Spoke Mag is not compatible with One Arm Drive or Projection Handrims.

Note: 5 Spoke Mag utilizes exclusive screw mounted handrims.

Note: if changing the Rear Wheel Size on a chair with Anti-tips, new size Anti-tip Assemblies ARE REQUIRED to accommodate the new Rear Wheel Size.

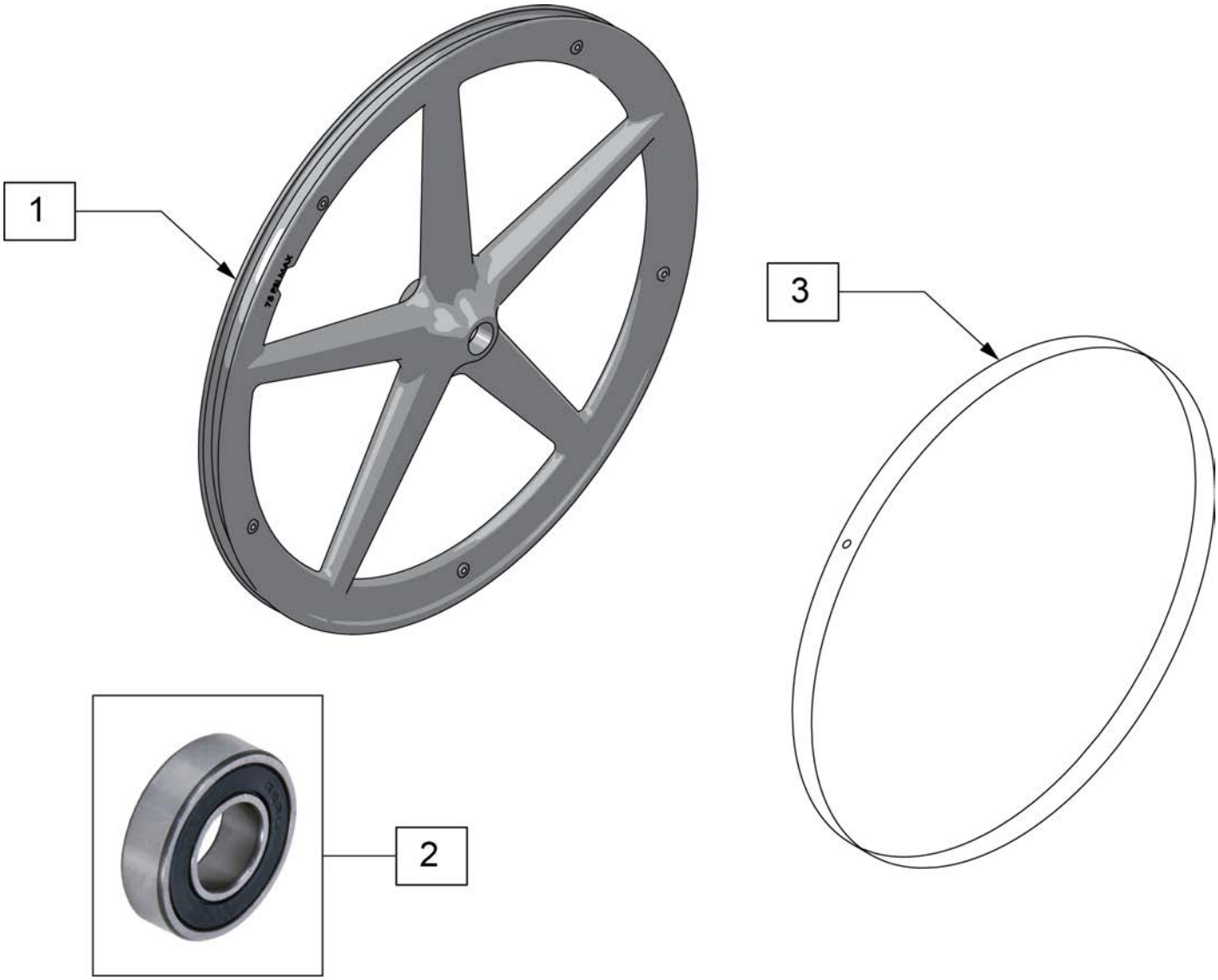

Pos.	Item Number	Description	Remarks
1,2	128985	20" 5 SPOKE MAG WHEEL	20" (451mm)
1,2	128986	22" 5 SPOKE MAG WHEEL	22" (501mm)
1,2	126405	24" MAG W/BRNG 5 SPOKE	24" (540mm)
2	349500	1 1/8 X 1/2 BEARING	
3	129325	20" MAG RIM STRIP	
3	129324	22" MAG RIM STRIP	
3	127912	24" MAG RIM STRIP	

LITE SPOKE

Note: this Wheel utilizes Screw Mount Handrims; the Handrim has a threaded hole that mounts the Handrim to the Wheel through a spacer and fastener.

Note: the Lite Spoke Wheel has a total of 30 spokes.

Note: if changing the Rear Wheel Size on a chair with Anti-tips, new size Anti-tip Assemblies ARE REQUIRED to accommodate the new Rear Wheel Size.

Note: when ordering replacement bearings, if dust shield on bearing has the following markings: MBL-Z2 6001 2RS, then order P/N 114097.

Pos.	Item Number	Description	Remarks
1A	118755	WHEEL ASSM GALLOP 20IN	20" (451)
1B	118756	WHEEL ASSM GALLOP 22IN	22" (501)
1C	107131	WHEEL RIM/SPOKE 24" ASSM	24" (540)
1D	118764	25 LT SPK W-HNDRM ANO ASSM GLP	25" (559)
1E	118760	WHEEL ASSM GALLOP 26IN	26" (590)
2A	114097	BEARING, REPLACEMENT, MBL	12.7mm i.d. - 28mm o.d. - 8mm wide; used prior to 11/29/10
2B	349500	1_125 X .5 BEARING	Beginning 11/29/10
3A	118100	MBL LT 20IN SPOKE RPLMNT KIT	Kit contains 6 inner and 6 outer spokes
3B	118101	MBL LT 22IN SPOKE RPLMNT KIT	Kit contains 6 inner and 6 outer spokes
3C	118102	MBL LT 24IN SPOKE RPLMNT KIT	Kit contains 6 inner and 6 outer spokes
3D	118103	MBL LT 25IN SPOKE RPLMNT KIT	Kit contains 6 inner and 6 outer spokes
3E	118104	MBL LT 26IN SPOKE RPLMNT KIT	Kit contains 6 inner and 6 outer spokes

NEW ULTRA LITE SPOKE

Note: Wheels do not include rim strips, see "RIM STRIP" page to order correct rim strip.

Note: this wheel utilizes Tab Mount Handrims - the handrim has a straight tab that mounts to the wheel through the rim.

Note: 20" wheels have 18 spokes per wheel; 22", 24" & 25" wheels have 24 spokes per wheel; spokes are black.

Note: if changing the Rear Wheel Size on a chair with Anti-tips, new size Anti-tip Assemblies ARE REQUIRED to accommodate the new Rear Wheel Size.

Pos.	Item Number	Description	Remarks
1A	112857	ULTRA LIGHTWEIGHT WHEEL 20"	20"
1B	112858	ULTRA LIGHT WHEEL 22"	22"(501mm)
1C	112859	ULTRA LIGHTWEIGHT WHEEL 24"	24"(540mm)
1D	112860	ULTRA LIGHTWEIGHT WHEEL 25"	25"(559mm)
2	349500	1 1/8 X 1/2 BEARING	
3A	118105	ULTRA LT 20IN SPOKE RPLMNT KIT	Kit contains 12 spokes
3B	118106	ULTRA LT 22IN SPOKE RPLMNT KIT	Kit contains 12 spokes
3C	118107	ULTRA LT 24IN SPOKE RPLMNT KIT	Kit contains 12 spokes
3D	118108	ULTRA LT 25IN SPOKE RPLMNT KIT	Kit contains 12 spokes

SPINERGY SPOX (18 SPOKE)

Note: this wheel utilizes tab mount handrims - the handrim has a straight tab that mounts to the wheel through the rim.

Note: please see the Rear Wheel Finder for the complete Wheel Assembly with the Flex Rim.

Note: if changing the Rear Wheel Size on a chair with Anti-tips, new size Anti-tip Assemblies ARE REQUIRED to accommodate the new Rear Wheel Size.

Pos.	Item Number	Description	Remarks
1	109242	SPINERGY STD WHL 22" BLK SPK	22"(489mm)
1	762438	SPINERGY STD WHEEL 540 BLK SPK	24"(540mm)
1	762441	SPINERGY STD WHL 559 BLK SPK	25"(559mm)
1	762437	SPINERGY STD WHEEL 590 BLK SPK	26"(590mm)
1	762442	SPINERGY STD WHEEL 540 BLUE	24"(540mm)
1	762444	SPINERGY STD WHEEL 559 BLU	25"(559mm)
1	762446	SPINERGY STD WHEEL 590 BLUE	26"(590mm)
1	762443	SPINERGY STD WHEEL 540 RED	24"(540mm)
1	762445	SPINERGY STD WHEEL 559 RED	25"(559mm)
1	762447	SPINERGY STD WHEEL 590 RED	26"(590mm)
1	762456	SPINERGY STD WHEEL 540 WHT	24"(540mm)
1	762433	SPINERGY STD WHEEL 540 YELLOW	24"(540mm)
1	762462	SPINERGY STD WHL 559 YLW SPK	25"(559mm)
1	762431	SPINERGY STD WHEEL 590 YELLOW	26"(590mm)
2	349500	1 1/8 X 1/2 BEARING	

Note: this wheel utilizes tab mount handrims - the handrim has a straight tab that mounts to the wheel through the rim.

Note: please see the Rear Wheel Finder for the complete Wheel Assembly with the Flex Rim.

Note: if changing the Rear Wheel Size on a chair with Anti-tips, new size Anti-tip Assemblies ARE REQUIRED to accommodate the new Rear Wheel Size.

Pos.	Item Number	Description	Remarks
1	108858	SPINGERY LT EX WHL 22" BLK	22"(489mm); 12 Spoke
1	109215	SPINERGY LT EX WHL 22" BLU	22"(489mm); 12 Spoke
1	109216	SPINERGY LT EX WHL 22" RED	22"(489mm); 12 Spoke
1	109217	SPINERGY LT EX WHL 22" WHT	22"(489mm); 12 Spoke
1	109218	SPINERGY LT EX WHL 22" YLW	22"(489mm); 12 Spoke
1	101989-001	SPINERGY LT EX WHEEL 540 BLK	24"(540mm); 12 Spoke
1	101989-002	SPINERGY LT EX WHEEL 540 BLU	24"(540mm); 12 Spoke
1	101989-003	SPINERGY LT EX WHEEL 540 RED	24"(540mm); 12 Spoke
1	101989-005	SPINERGY LT EX WHEEL 540 WHT	24"(540mm); 12 Spoke
1	101989-004	SPINERGY LT EX WHEEL 540 YLW	24"(540mm); 12 Spoke
1	101991-001	SPINERGY LT EX WHEEL 559 BLK	25"(559mm); 12 Spoke
1	101991-002	SPINERGY LT EX WHEEL 559 BLU	25"(559mm); 12 Spoke
1	101991-003	SPINERGY LT EX WHEEL 559 RED	25"(559mm); 12 Spoke
1	101991-004	SPINERGY LT EX WHEEL 559 YLW	25"(559mm); 12 Spoke
1	101993-001	SPINERGY LT EX WHEEL 590 BLK	26"(590mm); 12 Spoke
1	101993-004	SPINERGY LT EX WHEEL 590 YLW	26"(590mm); 12 Spoke
2	349500	1 1/8 X 1/2 BEARING	

Note: this wheel utilizes tab mount handrims - the handrim has a straight tab that mounts to the wheel through the rim.

Note: please see the Rear Wheel Finder for the complete Wheel Assembly with the Flex Rim.

Note: if changing the Rear Wheel Size on a chair with Anti-tips, new size Anti-tip Assemblies ARE REQUIRED to accommodate the new Rear Wheel Size.

Pos.	Item Number	Description	Remarks
1	101988-001	SPINRGY SPT LT EX WHL 540 BLK	24"(540mm), 18 spoke
1	101988-002	SPINRGY SPT LT EX WHL 540 BLU	24"(540mm), 18 spoke
1	101988-003	SPINRGY SPT LT EX WHL 540 RED	24"(540mm), 18 spoke
1	101988-004	SPINRGY SPT LT EX WHL 540 YLW	24"(540mm), 18 spoke
1	101988-005	SPINRGY SPT LT EX WHL 540 WHT	24"(540mm), 18 spoke
1	101990-001	SPINRGY SPT LT EX WHL 559 BLK	25"(559mm), 18 spoke
1	101990-002	SPINRGY SPT LT EX WHL 559 BLU	25"(559mm), 18 spoke
1	101990-003	SPINRGY SPT LT EX WHL 559 RED	25"(559mm), 18 spoke
1	101990-004	SPINRGY SPT LT EX WHL 559 YLW	25"(559mm), 18 spoke
1	101990-005	SPINRGY SPT LT EX WHL 559 WHT	25"(559mm), 18 spoke
1	101992-001	SPINRGY SPT LT EX WHL 590 BLK	26"(590mm), 18 spoke
1	101992-002	SPINRGY SPT LT EX WHL 590 BLU	26"(590mm), 18 spoke
1	101992-003	SPINRGY SPT LT EX WHL 590 RED	26"(590mm), 18 spoke
1	101992-004	SPINRGY SPT LT EX WHL 590 YLW	26"(590mm), 18 spoke
1	101992-005	SPINRGY SPT LT EX WHL 590 WHT	26"(590mm), 18 spoke
2	349500	1 1/8 X 1/2 BEARING	

Pos.	Item Number	Description	Remarks
1	385237	16" X 1.75" PNEU TIRE	
1	385250	20" PNEUMATIC TIRE	
1	385275	22" PNEUMATIC TIRE	22" x 1 3/8 (501mm)
1	385300	24" PNEUMATIC TIRE	24" x 1 3/8 (540mm)
1	385325	26" PNEUMATIC TIRE	26" x 1 3/8 (590mm)
1	384614	24" x 2.125 PNEUMATIC TIRE	24"x2 1/8 (540mm) used w/ M6

FULL POLY TIRE

Pos.	Item Number	Description	Remarks
1	386232	20" POLY TIRE STD	20"
1	386242	22" POLY TIRE STD	22" (501mm)
1	386252	24" POLY TIRE STD	24" (540mm)

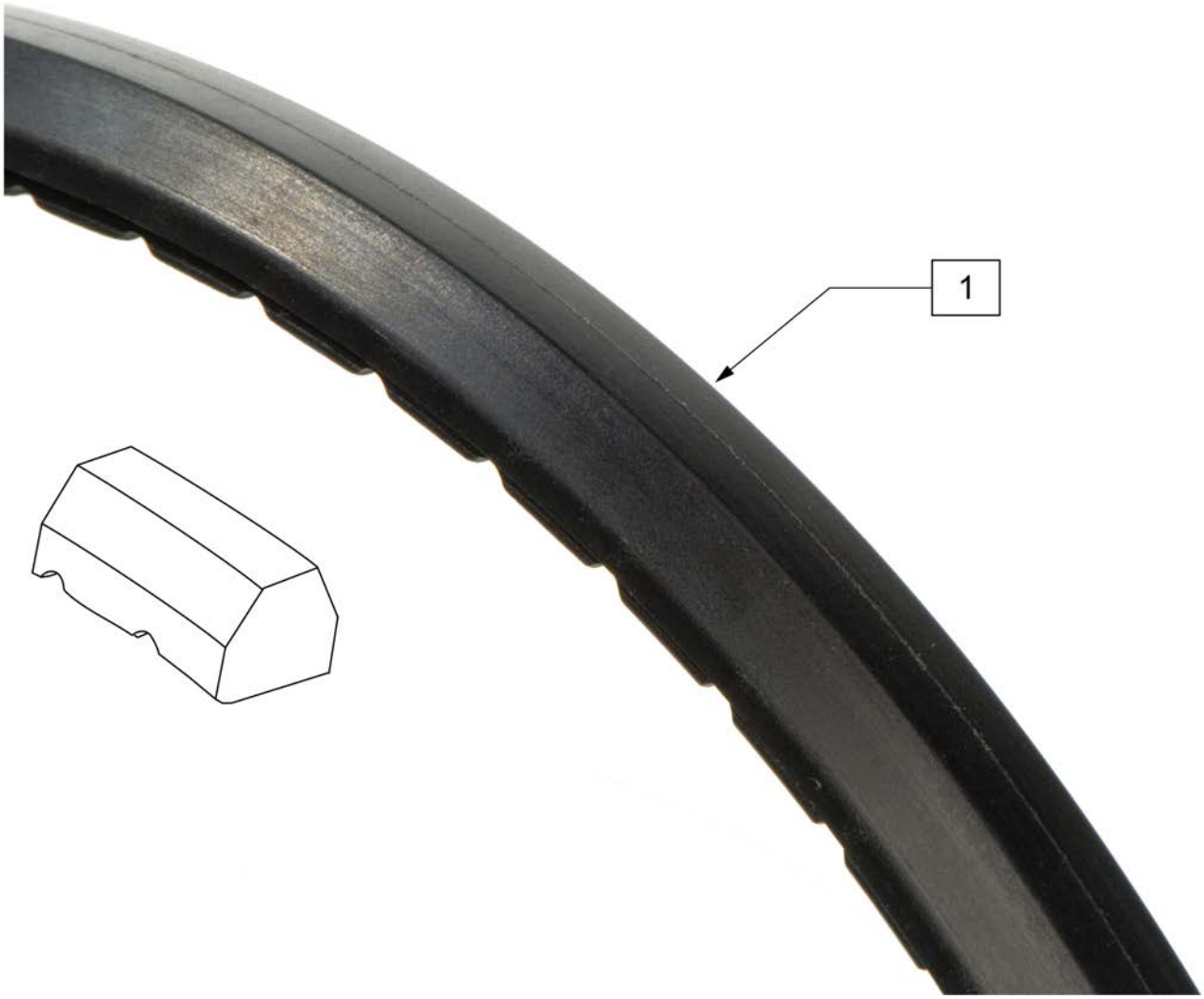

Pos.	Item Number	Description	Remarks
1	386262	20" LP POLY TIRE BR	20" =16" dia
1	386263	22" LP POLY TIRE BR	22"(501mm) = 18"dia
1	386254	24" POLY LOW PROFILE	24"(540mm)= 23" dia

HIGH PRESSURE CLINCHER TIRE

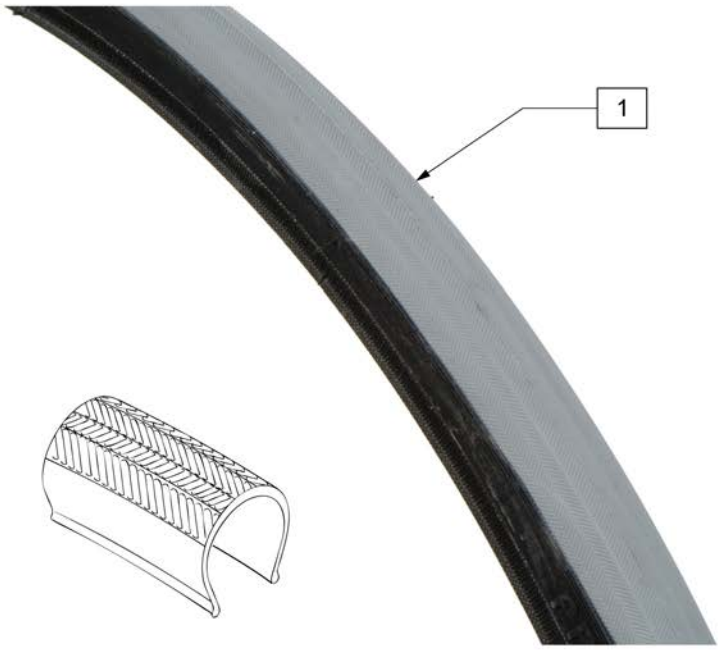

Pos.	Item Number	Description	Remarks
1	385280	22" x 1" HI PRES CLINCHER	22" (501mm)
1	389020	24" x 1" HI PRES CLNCHR TIRE	24" (540mm)
1	389012	QP 24" x 1" HT TURB BLK WR/BD 559	25" (559mm)
1	389030	26" x 1" HI PRES CLNCHR TIRE	26" (590mm)
1	105919	22" x 1" HI PRESS CLNCHR ULTRALIGHT	22" (489mm)

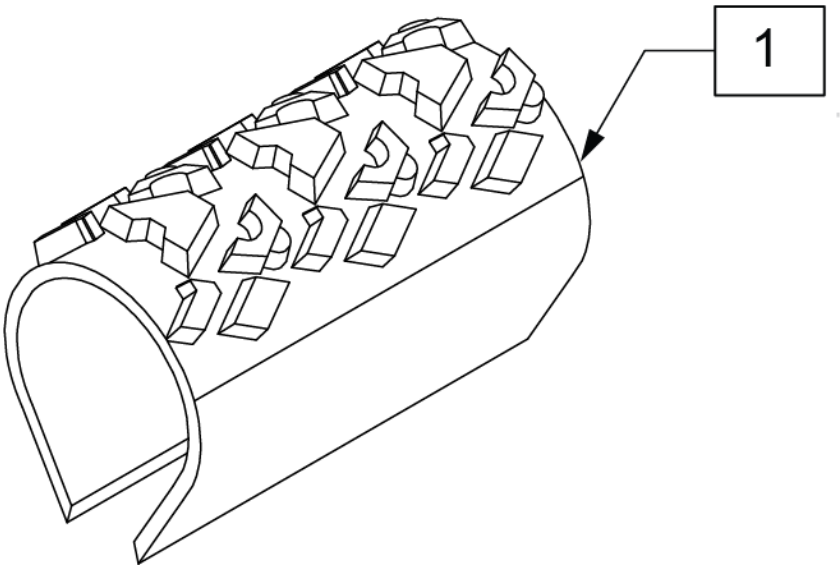

Pos.	Item Number	Description	Remarks
1	385354	24" X 1-3/8" KNOBBIE TIRE	24"(540mm)

SCHWALBE MARATHON PLUS TIRE

Pos.	Item Number	Description	Remarks
1	102066-004	TIRE SCHWALBE MP 489 BLK	22" (489mm)
1	102066-001	TIRE SCHWBL MPE 540 BLK	24" (540mm)
1	102066-002	TIRE SCHWBL MPE 559 BLK	25" (559mm)
1	102066-003	TIRE SCHWBL MPE 590 BLK	26" (590mm)

Pos.	Item Number	Description	Remarks
1	113247	TIRE SCHWALBE ONE 24 IN	24"(540mm)
1	113248	TIRE SCHWALBE ONE 25 IN	25"(559mm)

TUBES AND AIRLESS INSERTS

Pos.	Item Number	Description	Remarks
1A	Discontinued	Presta Valves Discontinued	
1A	384736	INNER TUBE 12-1/2" X 2-1/4"	
1A	384738	16" X 1.75" INNER TUBE	
1A	382255	TUBE 18" TIRE	18" X 1-3/4" TUBE
1A	382275	20" TUBE	20" 1-3/8" TUBE
1A	382300	22" TUBE	22" X 1-3/8" TUBE
1A	382336	TUBE PRIMO 24" 25-540 SV	24" X 1" TUBE
1A	382325	24 X 1.3/8IN TUBE REG	
1A	382334	TUBE INLINE 24 X 1.75	
1A	384551	26" X 1" TUBE SCHRADER	
1A	382350	26" TUBE	26" X 1-3/8" TUBE
1A	382361	TUBE 26 X 1.5/1.95/ S/V	
1A	382365	26 X 1.25/1.5 TUBE SHRADER	
1A	382375	24" x 2.125 TUBE	
1B	102972-001	12 1/2 IN AIRLESS INSERT	12-1/2" X 2-1/4"
1B	102973-001	16IN AIRLESS INSERT	16" X 1-3/4"
1B	102973-002	18IN AIRLESS INSERT	18" X 1-3/4"
1B	102973-003	20IN AIRLESS INSERT	20" X 1-3/8"
1B	102972-002	AIRLESS INSERT 20 X 2-1/8 P3	
1B	102973-004	22IN AIRLESS INSERT	22" X 1-3/8"
1B	102973-005	24IN AIRLESS INSERT	24" X 1-3/8"
1B	102972-003	AIRLESS INSERT 24 X 2-1/8	
1B	108259	26" AIRLESS INSERT	26" X 1-3/8"

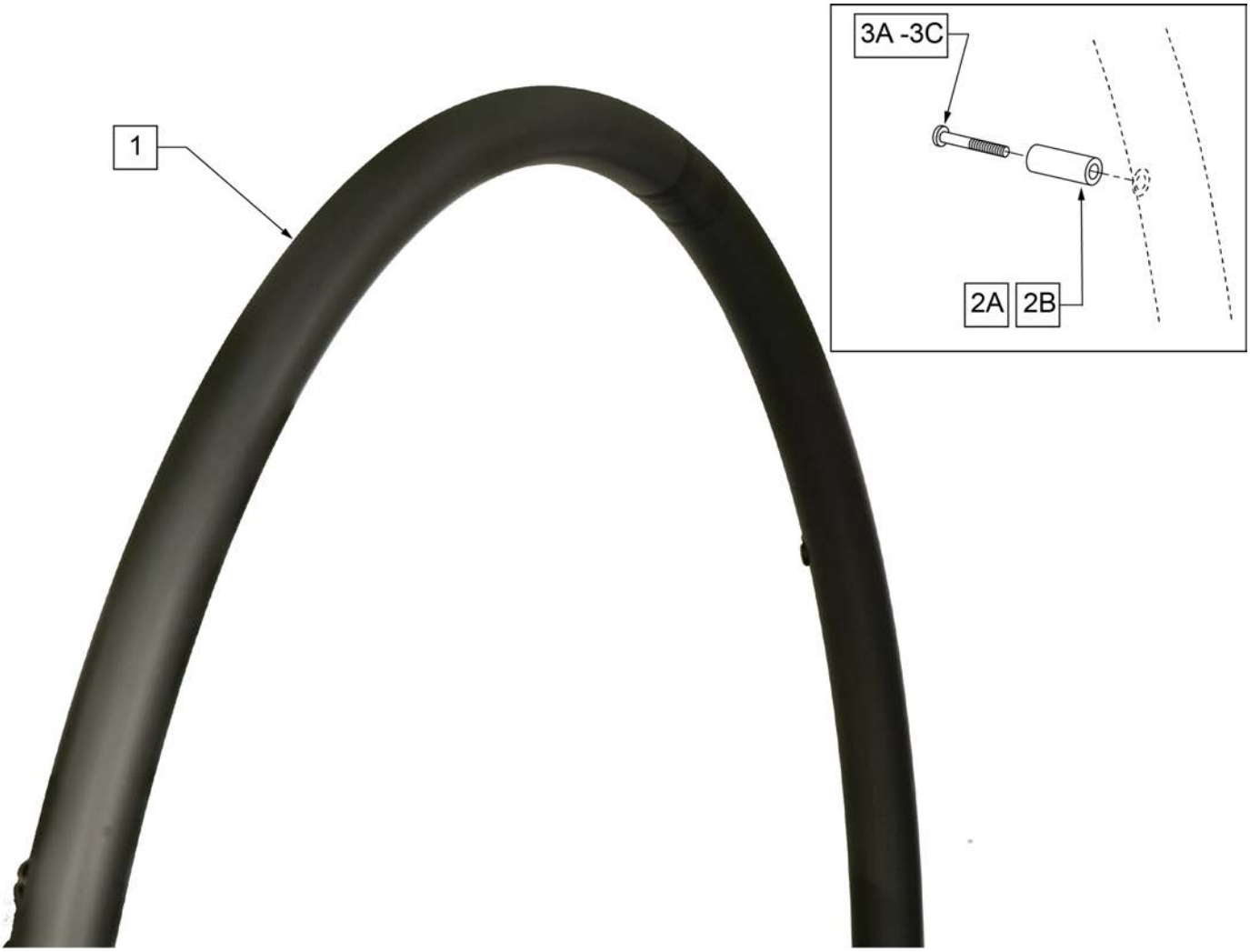

Pos.	Item Number	Description	Remarks
>>>>>	>>>>>>>>>>	LITE SPOKE	>>>>>
1,2A,3A	159508	20IN LT SPK AA HNDRIM W/HDWR	20" LITE SPOKE
1,2A,3A	159509	22IN LT SPK AA HNDRIM W/HDWR	22" (501) LITE SPOKE
1,2A,3A	159510	24IN LT SPK AA HNDRIM W/HDWR	24" (540) LITE SPOKE
1,2A,3A	159511	25IN LT SPK AA HNDRIM W/HDWR	25" (559) LITE SPOKE
1,2A,3A	159512	26IN LT SPK AA HNDRIM W/HDWR	26" (590) LITE SPOKE
2A,3A	159513	LT SPK AL AN HNDRIM HDWR	LITE SPOKE, SET OF 6
>>>>>	>>>>>>>>>>	SPOKE	>>>>>
1,2B,3B	425931	20" HR 6SMT W/HDWR	20" SPOKE
1,2B,3B	425941	22" HR 6SMT W/HDWR	22" (501) SPOKE
1,2B,3B	426000	24" HR 6SMT W/ HDWR	24" (540) SPOKE
2B,3B	159514	SPK AL AN HNDRIM HDWR	SPOKE, SET OF 6
>>>>>	>>>>>>>>>>	MAG	>>>>>
1,3C	425934	20" HR 6SMT 6MAG W/HDWR	20" MAG
1,3C	425951	22" HR 6SMT 6MAG W/HDWR	22" (501) MAG
1,3C	426009	24" HR 6SMT 6MAG W/HDWR	24" (540) MAG
3C	281175	10-32 X 2 1/8 PAN PHIL SS	MAG
>>>>>	>>>>>>>>>>	M6 SPOKE	>>>>>
1,2B,3B	425941	22" HR 6SMT W/HDWR	24" (540) SPOKE

PLASTIC COATED (SCREW MOUNT)

Pos.	Item Number	Description	Remarks
>>>>>	>>>>>>>>>>	SPOKE & LITE SPOKE	>>>>>
1-3	425933	20" HR 6SMT PLST W/HDWR	20" SPOKE
1-3	425943	22" HR 6SMT PLST W/HDWR	22" (501) SPOKE
1-3	426004	24" HR 6SMT PLST W/HDWR	24" (540) SPOKE
>>>>>	>>>>>>>>>>	MAG	>>>>>
1,4	425935	20" HR 6SMT 6MAG PLST W/HDWR	20" MAG
1,4	425953	22" HR 6SMT 6MAG PLST W/HDWR	22" (501) MAG
1,4	426013	24" HR 6SMT 6MAG PLST W/HDWR	24" (540) MAG
>>>>>	>>>>>>>>>>	M6 SPOKE	>>>>>
1-3	425943	22" HR 6SMT 6 MAG PLST W/ HDWR	24" (540) M6 SPOKE
2,3	159534	PLST COATED HNDRM HARDWARE	SPOKE; SET OF 6
4	281175	10 -32 x 2 1/8 PAN PHIL SS	6 SPOKE MAG

Pos.	Item Number	Description	Remarks
>>>>>	>>>>>>>>>>	MOUNTAIN	>>>>>
1,2	425022	22" HR 4T PLST W/ HDWR	24" (540)
1,2	425032	24"HR 6T PLST BB/NTBB/TN W/HDWR	26" (590)
>>>>>	>>>>>>>>>>	SPINERGY	>>>>>
1,2	425039	24"HR 6T BLK PLST W/HDWR	24" (540)
1,2	425032	24"HR 6T PLST BB/NTBB/TN W/HDWR	25" (559)
1,2	425052	26" HR 6T PLST BB/TN W/HDWR	26" (590)
>>>>>	>>>>>>>>>>	QP (QUICKIE PERFORMANCE)	>>>>>
1,2	425032	24"HR 6T PLST BB/NTBB/TN W/HDWR	25" (559)
1,2	425052	26" HR 6T PLST BB/TN W/HDWR	26" (590)
1,2	426060	QP 26" HR W/ HDWR (6T) PLASTIC	26" (700)
2	159535	PLST COATED TAB HNDRM HDWR	

ALUMINUM ANODIZED (TAB MOUNT)

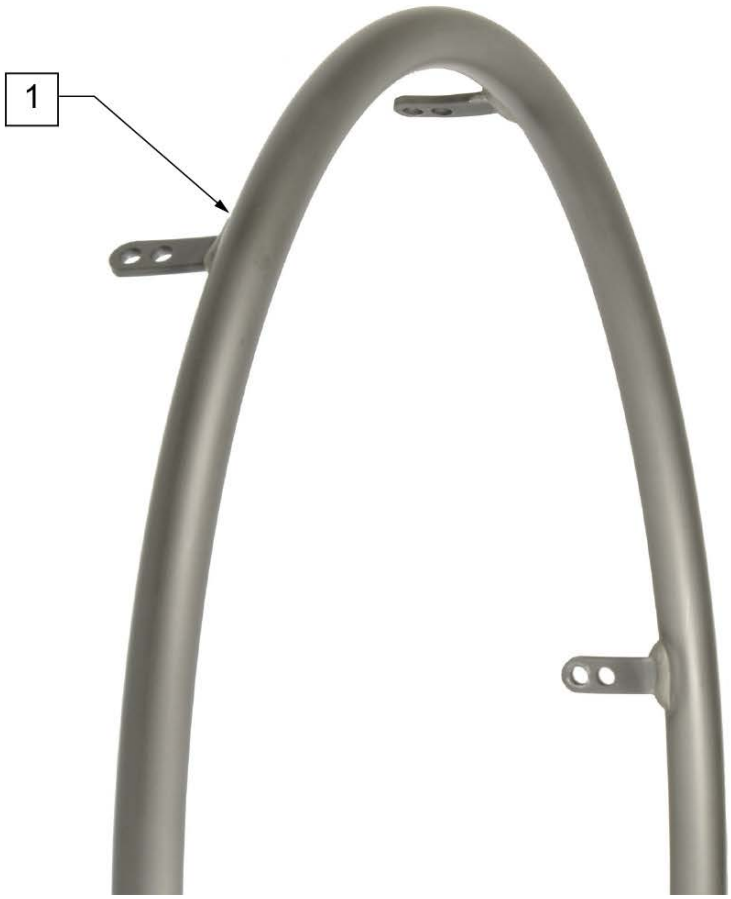

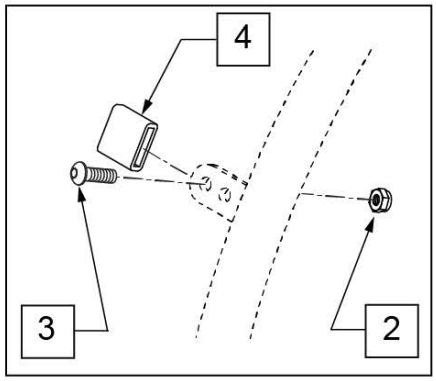

MEASURING GUIDE

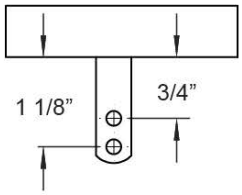

Pos.	Item Number	Description	Remarks
>>>>>	>>>>>>>>>>	CROSS SPOKE & SPOKE	>>>>>
1 -4	425095	HANDRIM 18" 4T W/HDWR ANO	18" SPOKE
1	529529	QP 24" HR .065 (6) TAB ANO	24" (540) CROSS SPOKE -SHORT & REG TAB
1 -4	425030	24" HR 6T BB/HTBB W/HDWR	25" (590) CROSS SPOKE
>>>>>	>>>>>>>>>>	CROSS SPOKE QP (QUICKIE PERFORMANCE)	>>>>>
1 -4	425050	26" HR 6T BB/TN W/HDWR	26" (590) CROSS SPOKE TENNIS & BBALL
1 -4	425045	24" HR SHT(6T)ANO W/X/S HDWR	25" (590) CROSS SPOKE TENNIS & BBALL-SHORT TAB
1 -4	425048	26" HR (6T)ANO W/X/S HDWR	26" (700) CROSS SPOKE TENNIS & BBALL -REG TAB
1 -4	425055	26" HR SHT(6T)ANO W/X/S HDWR	26" (700) CROSS SPOKE TENNIS & BBALL-SHORT TAB
1 -4	426015	QP 24" HR .049 W/HDWR SMT	24" (540) TENNIS
1 -4	425030	24" HR 6T BB/HTBB W/HDWR	25" (559) TENNIS & BASKETBALL
1 -4	426050	QP 26" HR .065 W/HDWR (6T)	26" (700) TENNIS & BASKETBALL
1 -4	425050	26" HR 6T BB/TN W/HDWR	26" (590) TENNIS & BASKETBALL
>>>>>	>>>>>>>>>>	SPINERGY	>>>>>
1	529529	QP 24" HR .065 (6) TAB ANO	24" (540) SPINERGY
1 -4	425038	QP 24" HR .049 W/HDWR (6T)	25" (559) SPINERGY
1 -4	425050	26" HR 6T BB/TN W/HDWR	26" (590) SPINERGY
>>>>>	>>>>>>>>>>	MOUNTAIN	>>>>>
1 -4	425020	22" HR 4T W/HDWR	24" (540) MOUNTAIN
1 -4	425030	24" HR 6T BB/HTBB W/HDWR	26" (590) MOUNTAIN
2-4	159515	AA TAB MOUNT HANDRIM HARDWARE	SET OF 6

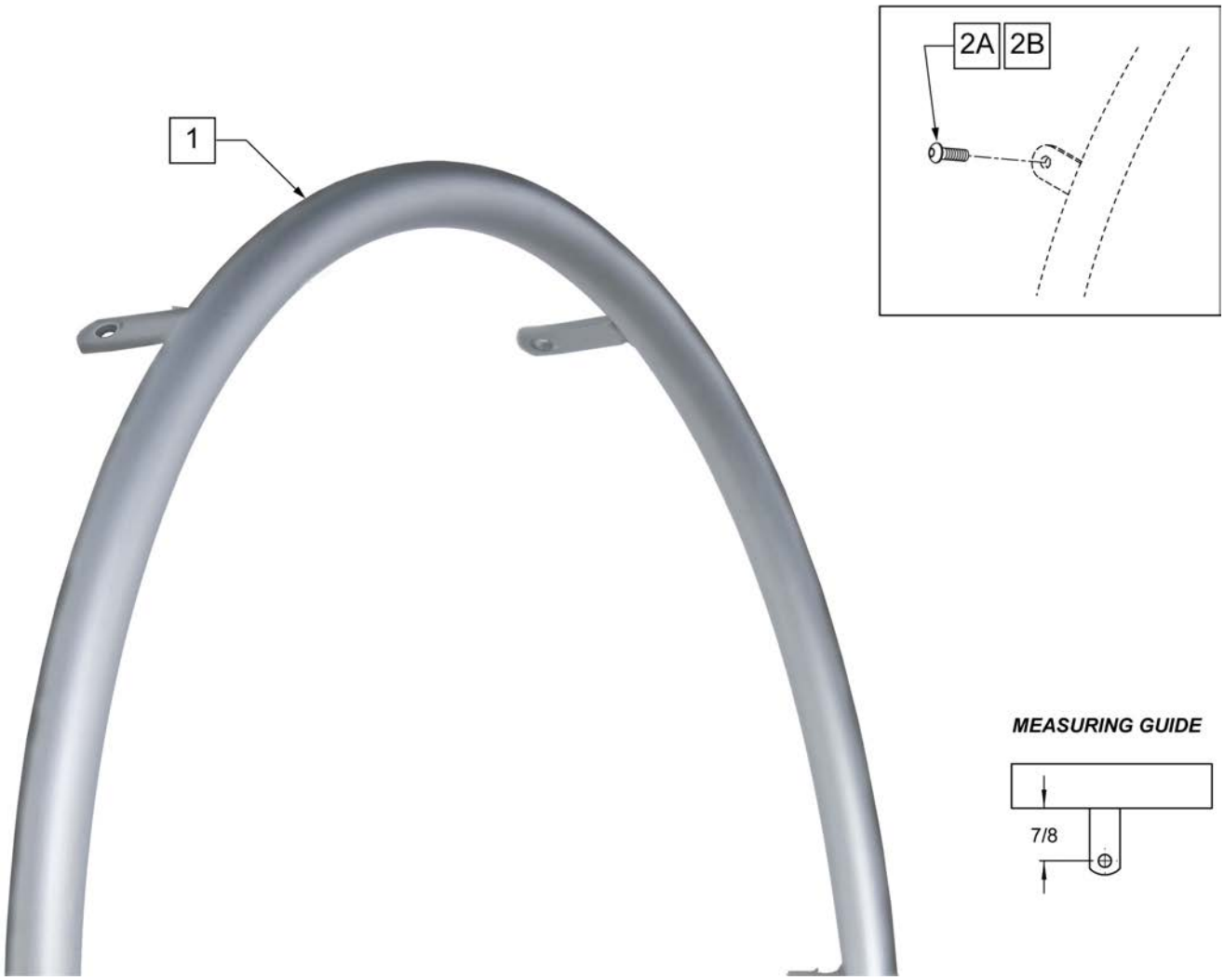

Pos.	Item Number	Description	Remarks
>>>>>	>>>>>>>>>>	ULTRA LITE SPOKE	>>>>>
1	100739-001	HANDRIM 22" WHL MBL 1260	22" (489)
1	100739-002	HANDRIM 24" WHL MBL 1260	24" (540)
1	100739-003	HANDRIM 26" WHL MBL 1260	26" (590)
2A	102259-001	BHCS M5 X .8 X 12 W/PL INORG	QTY 6 REG
>>>>>	>>>>>>>>>>	NEW ULTRA LITE SPOKE	>>>>>
1	066516-002	LIGHTWEIGHT HANDRIM 22"	22" (489)
1	066516-003	LIGHTWEIGHT HANDRIM 24"	24" (540)
1	066516-004	LIGHTWEIGHT HANDRIM 25"	26" (559)
2B	012931	BHCS M5 X 10 W/PL BLK CL 10.9	QTY 6 REG

ALUMINUM ANODIZED 5 SPOKE MAG (SCREW MOUNT)

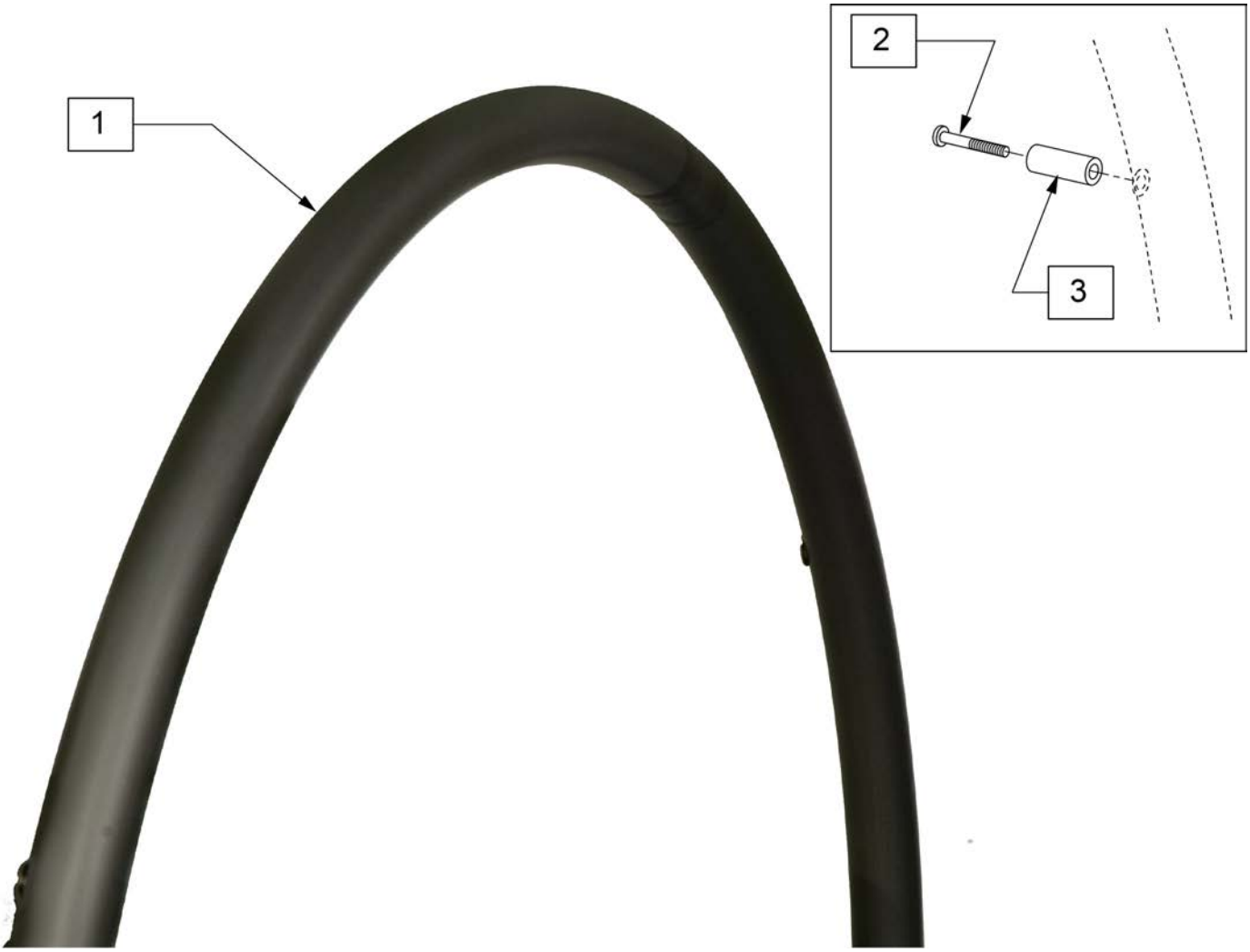

Pos.	Item Number	Description	Remarks
1-3	136158	20" ALU ANO HND RIM KIT	
1-3	136157	22" ALU ANO HND RIM KIT	
1-3	136156	24" ALU ANO HND RIM KIT	
2,3	159507	5 SPK HNDRM HDWR	set of 5

PLASTIC COATED 5 SPOKE MAG (SCREW MOUNT) (12/2014)

Pos.	Item Number	Description
2,3	159507	5 SPK HNDRM HDWR
1-3	136155	20" PLSTC COATED HND RIM KIT
1-3	136154	22" PLSTC COATED HND RIM KIT
1-3	136153	24" PLSTC COATED HND RIM KIT

NATURAL FIT 5 SPOKE MAG (SCREW MOUNT)

NOTE: fits 24" 5 Spoke Wheel only.

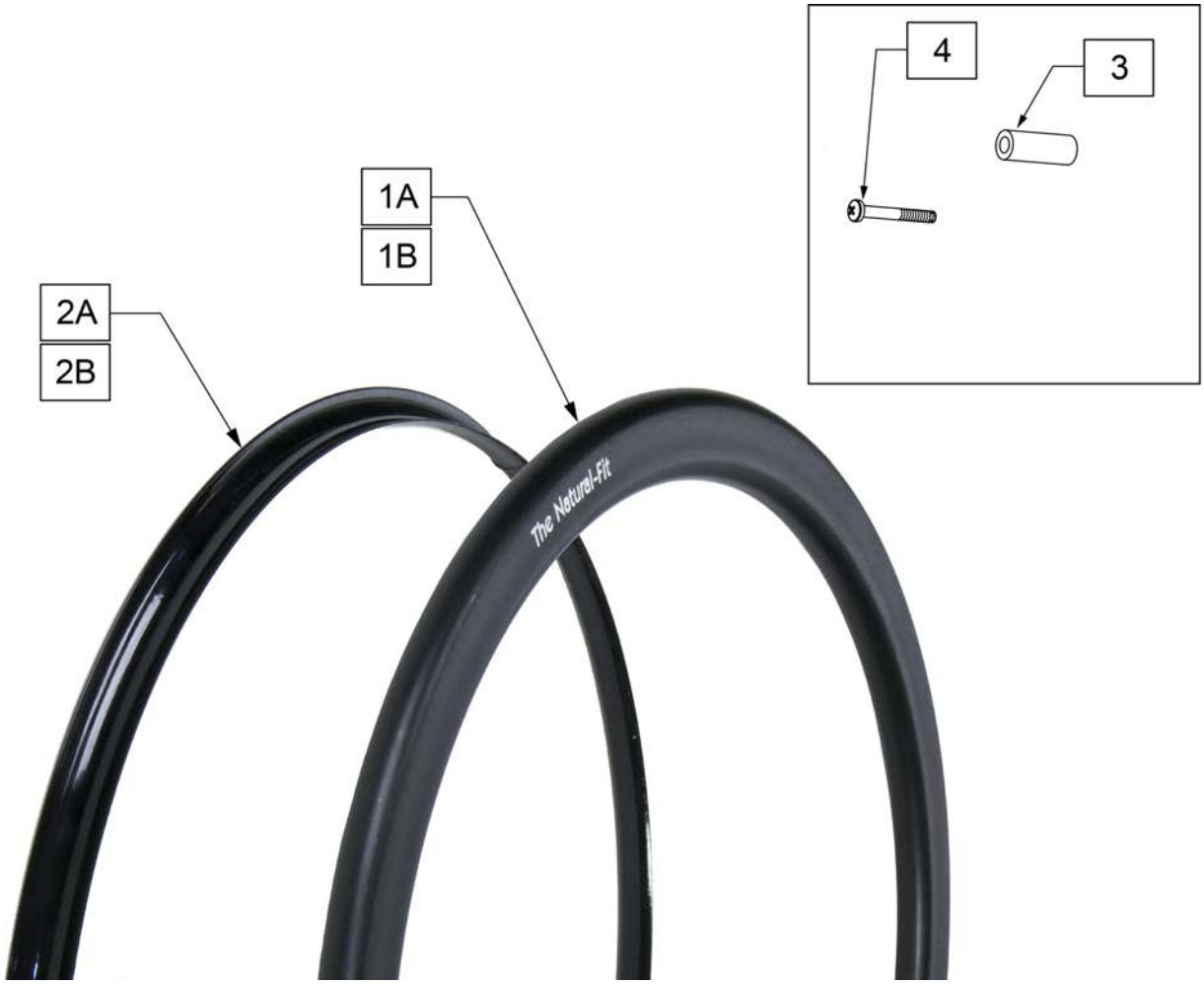

Pos.	Item Number	Description	Remarks
1A	126558	HNDRM NAT FIT LT OVAL 5 RVT	24" Light
1B	126559	HNDRM NATURAL FIT OVAL 5 RVT	24" Standard
2A	102168-004	GUARD THUMB NAT FIT 24 SG BLK	24" (540)- Super Grip Thumb Guard
2B	102168-003	GUARD THUMB NAT FIT 24 PC BLK	24" (540)- Standard Grip Thumb Guard
3	101932	SPCR .194ID X .375 OD X .750	
4	281175	10-32 X 2 1/8 PAN PHIL SS	

SEAT SLING ULTRA LITE (ZONE) (03/2010)

NOTE: Strap Kits contain Qty (5) 2" straps and Qty (3) 1" straps.

NOTE: Ultra Seat Sling features 2" depth growth via folded front adjustment strap.

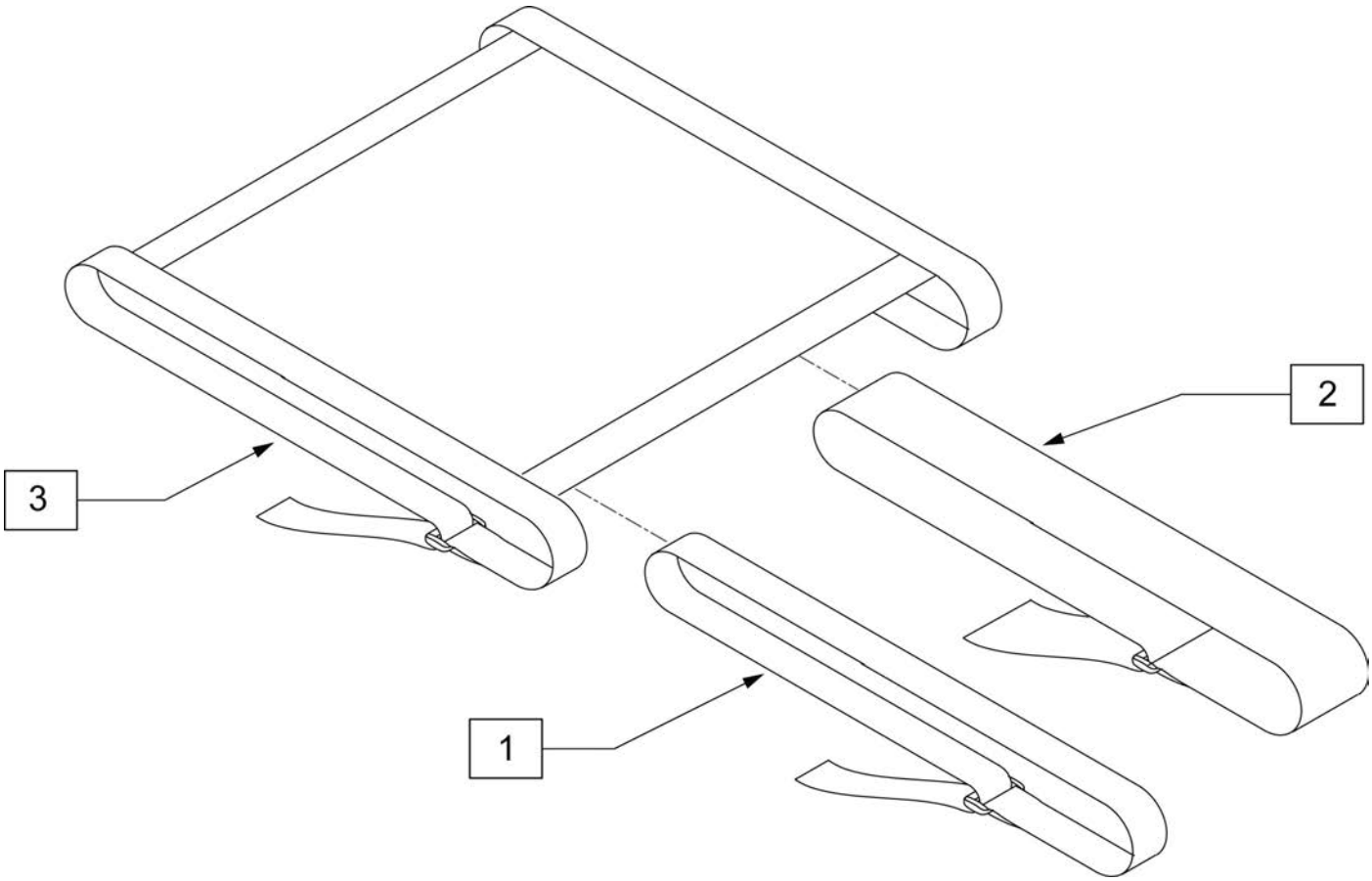

Pos.	Item Number	Description	Remarks	Pos.	Item Number	Description	Remarks
1-2	116717	SLING TEN ADJ STRAP KIT 8W KIT	See note 2	1-3	116728	ZONE ADJ SLNG 8WX13D KT	
1-2	116718	SLING TEN ADJ STRAP KIT 9W KIT	See note 2	1-3	116729	ZONE ADJ SLNG 8WX14D KT	
1-2	116719	SLING TEN ADJ STRAP KIT 10W KIT	See note 2	1-3	116730	ZONE ADJ SLNG 8WX15D KT	
1-2	116720	SLING TEN ADJ STRAP KIT 11W KIT	See note 2	1-3	116731	ZONE ADJ SLNG 8WX16-18D KT	
1-2	116721	SLING TEN ADJ STRAP KIT 12W KIT	See note 2	1-3	116732	ZONE ADJ SLNG 9WX8D KT	
1-2	116722	SLING TEN ADJ STRAP KIT 13W KIT		1-3	116733	ZONE ADJ SLNG 9WX9D KT	
1-2	114525	SLING TEN ADJ STRAP KIT 14W KIT		1-3	116734	ZONE ADJ SLNG 9WX10D KT	
1-2	114526	SLING TEN ADJ STRAP KIT 15W KIT		1-3	116735	ZONE ADJ SLNG 9WX11D KT	
1-2	114527	SLING TEN ADJ STRAP KIT 16W KIT		1-3	116736	ZONE ADJ SLNG 9WX12D KT	
1-2	114528	SLING TEN ADJ STRAP KIT 17W KIT		1-3	116737	ZONE ADJ SLNG 9WX13D KT	
1-2	114529	SLING TEN ADJ STRAP KIT 18W KIT		1-3	116738	ZONE ADJ SLNG 9WX14D KT	
1-3	116723	ZONE ADJ SLNG 8WX8D KT		1-3	116739	ZONE ADJ SLNG 9WX15D KT	
1-3	116724	ZONE ADJ SLNG 8WX9D KT		1-3	116740	ZONE ADJ SLNG 9WX16-18D KT	
1-3	116725	ZONE ADJ SLNG 8WX10D KT		1-3	116741	ZONE ADJ SLNG 10WX8D KT	
1-3	116726	ZONE ADJ SLNG 8WX11D KT		1-3	116742	ZONE ADJ SLNG 10WX9D KT	
1-3	116727	ZONE ADJ SLNG 8WX12D KT		1-3	116743	ZONE ADJ SLNG 10WX10D KT	

Pos.	Item Number	Description	Remarks	Pos.	Item Number	Description	Remarks
1-3	116744	ZONE ADJ SLNG 10WX11D KT		1-3	116774	ZONE ADJ SLNG 13WX14D KT	
1-3	116745	ZONE ADJ SLNG 10WX12D KT		1-3	116775	ZONE ADJ SLNG 13WX15D KT	
1-3	116746	ZONE ADJ SLNG 10WX13D KT		1-3	116776	ZONE ADJ SLNG 13WX16-18D KT	
1-3	116747	ZONE ADJ SLNG 10WX14D KT		1-3	116777	ZONE ADJ SLNG 14WX8D KT	
1-3	116748	ZONE ADJ SLNG 10WX15D KT		1-3	116778	ZONE ADJ SLNG 14WX9D KT	
1-3	116749	ZONE ADJ SLNG 10WX16-18D KT		1-3	116779	ZONE ADJ SLNG 14WX10D KT	
1-3	116750	ZONE ADJ SLNG 11WX8D KT		1-3	116780	ZONE ADJ SLNG 14WX11D KT	
1-3	116751	ZONE ADJ SLNG 11WX9D KT		1-3	116781	ZONE ADJ SLNG 14WX12D KT	
1-3	116752	ZONE ADJ SLNG 11WX10D KT		1-3	116782	ZONE ADJ SLNG 14WX13D KT	
1-3	116753	ZONE ADJ SLNG 11WX11D KT		1-3	116783	ZONE ADJ SLNG 14WX14D KT	
1-3	116754	ZONE ADJ SLNG 11WX12D KT		1-3	116784	ZONE ADJ SLNG 14WX15D KT	
1-3	116755	ZONE ADJ SLNG 11WX13D KT		1-3	116785	ZONE ADJ SLNG 14WX16-18D KT	
1-3	116756	ZONE ADJ SLNG 11WX14D KT		1-3	116786	ZONE ADJ SLNG 15WX8D KT	
1-3	116757	ZONE ADJ SLNG 11WX15D KT		1-3	116787	ZONE ADJ SLNG 15WX9D KT	
1-3	116758	ZONE ADJ SLNG 11WX16-18D KT		1-3	116788	ZONE ADJ SLNG 15WX10D KT	
1-3	116759	ZONE ADJ SLNG 12WX8D KT		1-3	116789	ZONE ADJ SLNG 15WX11D KT	
1-3	116760	ZONE ADJ SLNG 12WX9D KT		1-3	116790	ZONE ADJ SLNG 15WX12D KT	
1-3	116761	ZONE ADJ SLNG 12WX10D KT		1-3	116791	ZONE ADJ SLNG 15WX13D KT	
1-3	116762	ZONE ADJ SLNG 12WX11D KT		1-3	116792	ZONE ADJ SLNG 15WX14D KT	
1-3	116763	ZONE ADJ SLNG 12WX12D KT		1-3	116793	ZONE ADJ SLNG 15WX15D KT	
1-3	116764	ZONE ADJ SLNG 12WX13D KT		1-3	116794	ZONE ADJ SLNG 15WX16-18D KT	
1-3	116765	ZONE ADJ SLNG 12WX14D KT		1-3	116795	ZONE ADJ SLNG 16WX8D KT	
1-3	116766	ZONE ADJ SLNG 12WX15D KT		1-3	116796	ZONE ADJ SLNG 16WX9D KT	
1-3	116767	ZONE ADJ SLNG 12WX16-18D KT		1-3	116797	ZONE ADJ SLNG 16WX10D KT	
1-3	116768	ZONE ADJ SLNG 13WX8D KT		1-3	116798	ZONE ADJ SLNG 16WX11D KT	
1-3	116769	ZONE ADJ SLNG 13WX9D KT		1-3	116799	ZONE ADJ SLNG 16WX12D KT	
1-3	116770	ZONE ADJ SLNG 13WX10D KT		1-3	116800	ZONE ADJ SLNG 16WX13D KT	
1-3	116771	ZONE ADJ SLNG 13WX11D KT		1-3	116801	ZONE ADJ SLNG 16WX14D KT	
1-3	116772	ZONE ADJ SLNG 13WX12D KT		1	116802	ZONE ADJ SLNG 16WX15D KT	
1-3	116773	ZONE ADJ SLNG 13WX13D KT		1	116803	ZONE ADJ SLNG 16WX16-18D KT	

1" SEAT CUSHION

(06/2010)

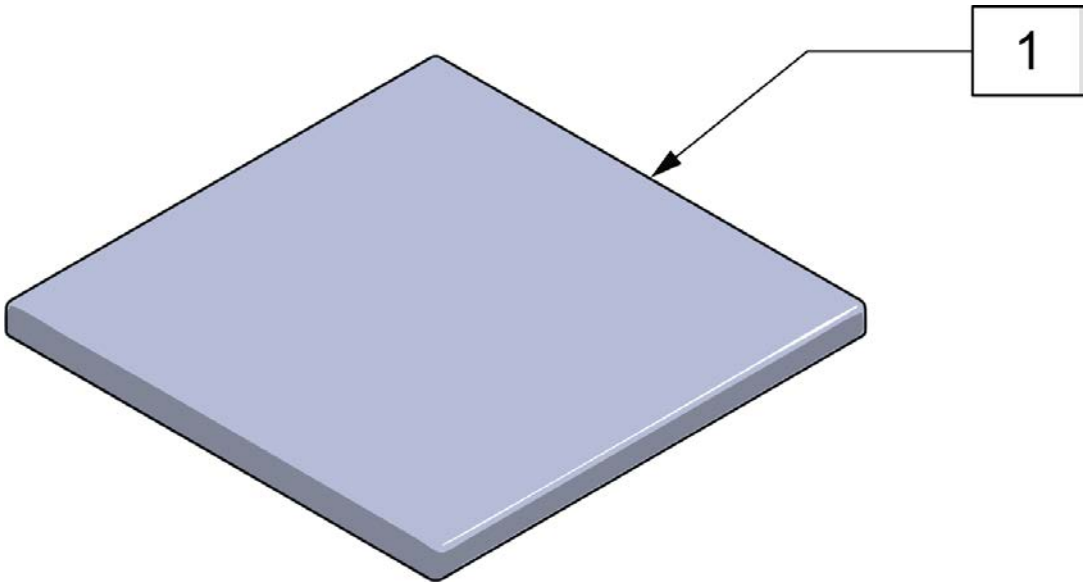

Pos.	Item Number	Description	Pos.	Item Number	Description
		8" WIDE SEAT CUSHIONS	1	115484	Seat Cushion 1 Thk, 11x15
1	115444	Seat Cushion 1 Thk,8x8	1	115485	Seat Cushion 1 Thk, 11x16
1	115445	Seat Cushion 1 Thk, 8x9			12" WIDE SEAT CUSHIONS
1	115446	Seat Cushion 1 Thk, 8x10	1	115448	Seat Cushion 1 Thk, 12X8
1	115447	Seat Cushion 1 Thk, 8x11	1	115459	Seat Cushion 1 Thk, 12X9
1	115448	Seat Cushion 1 Thk, 8x12	1	115470	Seat Cushion 1 Thk, 12X10
1	115449	Seat Cushion 1 Thk, 8x13	1	115481	Seat Cushion 1 Thk, 12X11
1	115450	Seat Cushion 1 Thk, 8x14	1	115492	Seat Cushion 1 Thk,12x12
		9" WIDE SEAT CUSHIONS	1	115493	Seat Cushion 1 Thk, 12x13
1	115445	Seat Cushion 1 Thk, 9X8	1	115494	Seat Cushion 1 Thk, 12x14
1	115456	Seat Cushion 1 Thk, 9x9	1	115495	Seat Cushion 1 Thk, 12x15
1	115457	Seat Cushion 1 Thk, 9x10	1	115496	Seat Cushion 1 Thk, 12x16
1	115458	Seat Cushion 1 Thk, 9x11	1	115497	Seat Cushion 1 Thk, 12x17
1	115459	Seat Cushion 1 Thk, 9x12			13" WIDE SEAT CUSHIONS
1	115460	Seat Cushion 1 Thk, 9x13	1	115449	Seat Cushion 1 Thk, 13X8
1	115461	Seat Cushion 1 Thk, 9x14	1	115460	Seat Cushion 1 Thk, 13X9
1	115462	Seat Cushion 1 Thk, 9x15	1	115471	Seat Cushion 1 Thk, 13X10
		10" WIDE SEAT CUSHIONS	1	115482	Seat Cushion 1 Thk, 13X11
1	115446	Seat Cushion 1 Thk, 10X8	1	115493	Seat Cushion 1 Thk, 13X12
1	115457	Seat Cushion 1 Thk, 10X9	1	115504	Seat Cushion 1 Thk, 13x13
1	115468	Seat Cushion 1 Thk, 10x10	1	115505	Seat Cushion 1 Thk, 13x14
1	115469	Seat Cushion 1 Thk, 10x11	1	115506	Seat Cushion 1 Thk, 13x15
1	115470	Seat Cushion 1 Thk, 10x12	1	115507	Seat Cushion 1 Thk, 13x16
1	115471	Seat Cushion 1 Thk, 10x13	1	115508	Seat Cushion 1 Thk, 13x17
1	115472	Seat Cushion 1 Thk, 10x14	1	115509	Seat Cushion 1 Thk, 13x18
1	115473	Seat Cushion 1 Thk, 10x15			14" WIDE SEAT CUSHIONS
		11" WIDE SEAT CUSHIONS	1	115450	Seat Cushion 1 Thk, 14X8
1	115447	Seat Cushion 1 Thk, 11X8	1	115461	Seat Cushion 1 Thk, 14X9
1	115458	Seat Cushion 1 Thk, 11X9	1	115472	Seat Cushion 1 Thk, 14X10
1	115469	Seat Cushion 1 Thk, 11X10	1	115483	Seat Cushion 1 Thk, 14X11
1	115480	Seat Cushion 1 Thk,11x11	1	115494	Seat Cushion 1 Thk, 14X12
1	115481	Seat Cushion 1 Thk, 11x12	1	115505	Seat Cushion 1 Thk, 14X13
1	115482	Seat Cushion 1 Thk, 11x13	1	115516	Seat Cushion 1 Thk, 14x14
1	115483	Seat Cushion 1 Thk, 11x14	1	115517	Seat Cushion 1 Thk, 14x15

Pos.	Item Number	Description	Pos.	Item Number	Description
1	115518	Seat Cushion 1 Thk, 14x16	1	115507	Seat Cushion 1 Thk, 16X13
1	115519	Seat Cushion 1 Thk, 14x17	1	115518	Seat Cushion 1 Thk, 16X14
1	115520	Seat Cushion 1 Thk, 14x18	1	115529	Seat Cushion 1 Thk, 16X15
		15" WIDE SEAT CUSHIONS	1	115540	Seat Cushion 1 Thk, 16x16
1	115462	Seat Cushion 1 Thk, 15X9	1	115541	Seat Cushion 1 Thk, 16x17
1	115473	Seat Cushion 1 Thk, 15X10	1	115542	Seat Cushion 1 Thk, 16x18
1	115484	Seat Cushion 1 Thk, 15X11			17" WIDE SEAT CUSHIONS
1	115495	Seat Cushion 1 Thk, 15X12	1	115497	Seat Cushion 1 Thk, 17X12
1	115506	Seat Cushion 1 Thk, 15X13	1	115508	Seat Cushion 1 Thk, 17X13
1	115517	Seat Cushion 1 Thk, 15X14	1	115519	Seat Cushion 1 Thk, 17X14
1	115528	Seat Cushion 1 Thk, 15x15	1	115530	Seat Cushion 1 Thk, 17X15
1	115529	Seat Cushion 1 Thk, 15x16	1	115541	Seat Cushion 1 Thk, 17X16
1	115530	Seat Cushion 1 Thk, 15x17			18" WIDE SEAT CUSHIONS
1	115531	Seat Cushion 1 Thk, 15x18	1	115509	Seat Cushion 1 Thk, 18X13
		16" WIDE SEAT CUSHIONS	1	115520	Seat Cushion 1 Thk, 18X14
1	115485	Seat Cushion 1 Thk, 16X11	1	115531	Seat Cushion 1 Thk, 18X15
1	115496	Seat Cushion 1 Thk, 16X12	1	115542	Seat Cushion 1 Thk, 18X16

2" SEAT CUSHION (10/2010]

NOTE: On all Quickie 2 and GP Family of Chairs an inch deeper cushion is utilized on all seat depths.

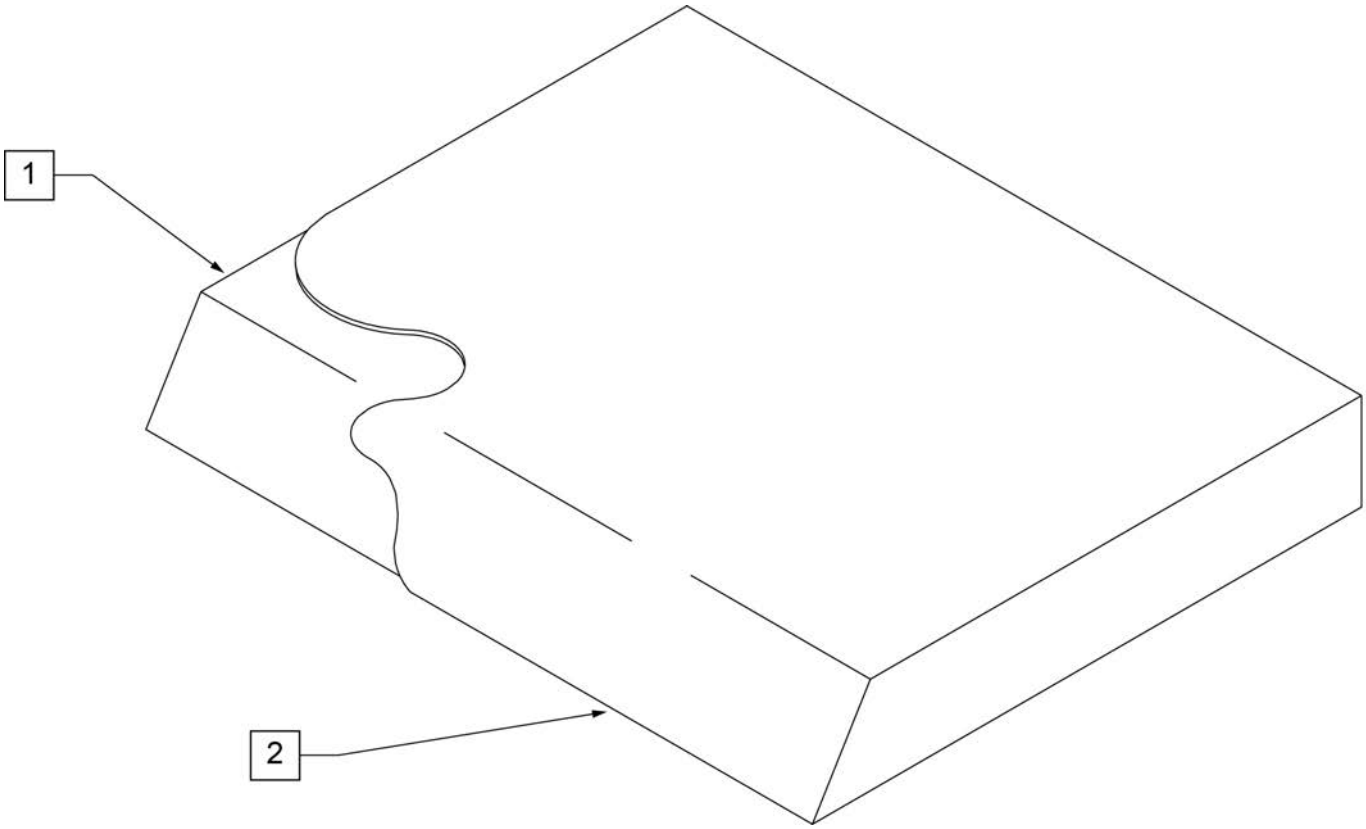

Pos.	Item Number	Description	Pos.	Item Number	Description
>>>>		10" WIDE SEAT CUSHION	1,2	700102	SEAT CUSHION 12" X 10" X 2"
1,2	700025	SEAT CUSHION 10" X 8" X 2"	1,2	700112	SEAT CUSHION 12" X 11" X 2"
1,2	700026	SEAT CUSHION 10" X 9" X 2"	1,2	700122	SEAT CUSHION 12" X 12" X 2"
1,2	700027	SEAT CUSHION 10" X 10" X 2"	1,2	700132	SEAT CUSHION 12" X 13" X 2"
1,2	700028	SEAT CUSHION 10" X 11" X 2"	1,2	700142	SEAT CUSHION 12" X 14" X 2"
1,2	700029	SEAT CUSHION 10" X 12" X 2"	1,2	700152	SEAT CUSHION 12" X 15" X 2"
1,2	700035	SEAT CUSHION 10" X 13" X 2"	1,2	700162	SEAT CUSHION 12" X 16" X 2"
1,2	700045	SEAT CUSHION 10" X 14" X 2"	1,2	700172	SEAT CUSHION 12" X 17" X 2"
>>>>		11" WIDE SEAT CUSHION	1,2	700182	SEAT CUSHION 12" X 18" X 2"
1,2	700055	SEAT CUSHION 11" X 8" X 2"	1,2	700192	SEAT CUSHION 12" X 19" X 2"
1,2	700056	SEAT CUSHION 11" X 9" X 2"	>>>>		13" WIDE SEAT CUSHION
1,2	700002	SEAT CUSHION 11" X 10" X 2"	1,2	700207	SEAT CUSHION 13" X 8" X 2"
1,2	700012	SEAT CUSHION 11" X 11" X 2"	1,2	700208	SEAT CUSHION 13" X 9" X 2"
1,2	700022	SEAT CUSHION 11" X 12" X 2"	1,2	700202	SEAT CUSHION 13" X 10" X 2"
1,2	700032	SEAT CUSHION 11" X 13" X 2"	1,2	700212	SEAT CUSHION 13" X 11" X 2"
1,2	700042	SEAT CUSHION 11" X 14" X 2"	1,2	700222	SEAT CUSHION 13" X 12" X 2"
1,2	700052	SEAT CUSHION 11" X 15" X 2"	1,2	700232	SEAT CUSHION 13" X 13" X 2"
1,2	700062	SEAT CUSHION 11" X 16" X 2"	1,2	700242	SEAT CUSHION 13" X 14" X 2"
1,2	700072	SEAT CUSHION 11" X 17" X 2"	1,2	700252	SEAT CUSHION 13" X 15" X 2"
1,2	700082	SEAT CUSHION 11" X 18" X 2"	1,2	700262	SEAT CUSHION 13" X 16" X 2"
>>>>		12" WIDE SEAT CUSHION	1,2	700272	SEAT CUSHION 13" X 17" X 2"
1,2	700107	SEAT CUSHION 12" X 8" X 2"	1,2	700277	SEAT CUSHION 13" X 18" X 2"
1,2	700108	SEAT CUSHION 12" X 9" X 2"	1,2	700267	SEAT CUSHION 13" X 19" X 2"

Pos.	Item Number	Description
>>>>		14" WIDE SEAT CUSHION
1,2	700287	SEAT CUSHION 14" X 8" X 2"
1,2	700288	SEAT CUSHION 14" X 9" X 2"
1,2	700282	SEAT CUSHION 14" X 10" X 2"
1,2	700292	SEAT CUSHION 14" X 11" X 2"
1,2	700302	SEAT CUSHION 14" X 12" X 2"
1,2	700312	SEAT CUSHION 14" X 13" X 2"
1,2	700322	SEAT CUSHION 14" X 14" X 2"
1,2	700332	SEAT CUSHION 14" X 15" X 2"
1,2	700342	SEAT CUSHION 14" X 16" X 2"
1,2	700352	SEAT CUSHION 14" X 17" X 2"
1,2	700362	SEAT CUSHION 14" X 18" X 2"
1,2	700372	SEAT CUSHION 14" X 19" X 2"
1,2	700382	SEAT CUSHION 14" X 20" X 2"
1,2	700392	SEAT CUSHION 14" X 21" X 2"
1,2	702110	SEAT CUSHION 14" X 22" X 2"
>>>>		15" WIDE SEAT CUSHION
1,2	700398	SEAT CUSHION 15" X 11" X 2"
1,2	700402	SEAT CUSHION 15" X 12" X 2"
1,2	700412	SEAT CUSHION 15" X 13" X 2"
1,2	700422	SEAT CUSHION 15" X 14" X 2"
1,2	700432	SEAT CUSHION 15" X 15" X 2"
1,2	700442	SEAT CUSHION 15" X 16" X 2"
1,2	700452	SEAT CUSHION 15" X 17" X 2"
1,2	700462	SEAT CUSHION 15" X 18" X 2"
1,2	700472	SEAT CUSHION 15" X 19" X 2"
1,2	700482	SEAT CUSHION 15" X 20" X 2"
1,2	700492	SEAT CUSHION 15" X 21" X 2"
1,2	702111	SEAT CUSHION 15" X 22" X 2"
>>>>		16" WIDE SEAT CUSHION
1,2	700498	SEAT CUSHION 16" X 11" X 2"
1,2	700502	SEAT CUSHION 16" X 12" X 2"
1,2	700512	SEAT CUSHION 16" X 13" X 2"
1,2	700522	SEAT CUSHION 16" X 14" X 2"
1,2	700532	SEAT CUSHION 16" X 15" X 2"
1,2	700542	SEAT CUSHION 16" X 16" X 2"
1,2	700552	SEAT CUSHION 16" X 17" X 2"
1,2	700562	SEAT CUSHION 16" X 18" X 2"
1,2	700572	SEAT CUSHION 16" X 19" X 2"
1,2	700582	SEAT CUSHION 16" X 20" X 2"
1,2	700592	SEAT CUSHION 16" X 21" X 2"
1,2	702112	SEAT CUSHION 16" X 22" X 2"
>>>>		17" WIDE SEAT CUSHION
1,2	700585	SEAT CUSHION 17" X 11" X 2"
1,2	700606	SEAT CUSHION 17" X 12" X 2"
1,2	700597	SEAT CUSHION 17" X 13" X 2"
1,2	700602	SEAT CUSHION 17" X 14" X 2"
1,2	700612	SEAT CUSHION 17" X 15" X 2"
1,2	700622	SEAT CUSHION 17" X 16" X 2"
1,2	700632	SEAT CUSHION 17" X 17" X 2"
1,2	700642	SEAT CUSHION 17" X 18" X 2"
1,2	700652	SEAT CUSHION 17" X 19" X 2"
1,2	700662	SEAT CUSHION 17" X 20" X 2"
1,2	700672	SEAT CUSHION 17" X 21" X 2"
1,2	702113	SEAT CUSHION 17" X 22" X 2"
>>>>		18" WIDE SEAT CUSHION
1,2	700682	SEAT CUSHION 18" X 12" X 2"
1,2	700692	SEAT CUSHION 18" X 13" X 2"
1,2	700702	SEAT CUSHION 18" X 14" X 2"
1,2	700712	SEAT CUSHION 18" X 15" X 2"
1,2	700722	SEAT CUSHION 18" X 16" X 2"
1,2	700732	SEAT CUSHION 18" X 17" X 2"
1,2	700742	SEAT CUSHION 18" X 18" X 2"
1,2	700752	SEAT CUSHION 18" X 19" X 2"
1,2	700762	SEAT CUSHION 18" X 20" X 2"
1,2	700772	SEAT CUSHION 18" X 21" X 2"
1,2	702114	SEAT CUSHION 18" X 22" X 2"
>>>>		19" WIDE SEAT CUSHION
1,2	700782	SEAT CUSHION 19" X 12" X 2"
1,2	700792	SEAT CUSHION 19" X 13" X 2"
1,2	700802	SEAT CUSHION 19" X 14" X 2"
1,2	700812	SEAT CUSHION 19" X 15" X 2"
1,2	700822	SEAT CUSHION 19" X 16" X 2"
1,2	700832	SEAT CUSHION 19" X 17" X 2"
1,2	700842	SEAT CUSHION 19" X 18" X 2"
1,2	700852	SEAT CUSHION 19" X 19" X 2"
1,2	700862	SEAT CUSHION 19" X 20" X 2"
1,2	700872	SEAT CUSHION 19" X 21" X 2"
1,2	702115	SEAT CUSHION 19" X 22" X 2"
>>>>		20" WIDE SEAT CUSHION
1,2	700882	SEAT CUSHION 20" X 12" X 2"
1,2	700892	SEAT CUSHION 20" X 13" X 2"
1,2	700902	SEAT CUSHION 20" X 14" X 2"
1,2	700912	SEAT CUSHION 20" X 15" X 2"
1,2	700922	SEAT CUSHION 20" X 16" X 2"
1,2	700932	SEAT CUSHION 20" X 17" X 2"
1,2	700942	SEAT CUSHION 20" X 18" X 2"
1,2	700952	SEAT CUSHION 20" X 19" X 2"
1,2	700962	SEAT CUSHION 20" X 20" X 2"
1,2	700972	SEAT CUSHION 20" X 21" X 2"
1,2	702116	SEAT CUSHION 20" X 22" X 2"
>>>>		21" WIDE SEAT CUSHION
1,2	702080	SEAT CUSHION 21" X 13" X 2"
1,2	702081	SEAT CUSHION 21" X 14" X 2"
1,2	702082	SEAT CUSHION 21" X 15" X 2"
1,2	702083	SEAT CUSHION 21" X 16" X 2"
1,2	702084	SEAT CUSHION 21" X 17" X 2"
1,2	702085	SEAT CUSHION 21" X 18" X 2"
1,2	702086	SEAT CUSHION 21" X 19" X 2"
1,2	702087	SEAT CUSHION 21" X 20" X 2"
1,2	702088	SEAT CUSHION 21" X 21" X 2"
1,2	702089	SEAT CUSHION 21" X 22" X 2"
>>>>		22" WIDE SEAT CUSHION
1,2	702090	SEAT CUSHION 22" X 13" X 2"
1,2	702091	SEAT CUSHION 22" X 14" X 2"
1,2	702092	SEAT CUSHION 22" X 15" X 2"
1,2	702093	SEAT CUSHION 22" X 16" X 2"
1,2	702094	SEAT CUSHION 22" X 17" X 2"
1,2	702095	SEAT CUSHION 22" X 18" X 2"
1,2	702096	SEAT CUSHION 22" X 19" X 2"
1,2	702097	SEAT CUSHION 22" X 20" X 2"
1,2	702098	SEAT CUSHION 22" X 21" X 2"
1,2	702117	SEAT CUSHION 22" X 22" X 2"
>>>>		24" WIDE SEAT CUSHION

Pos.	Item Number	Description
1,2	702099	SEAT CUSHION 24" X 14" X 2
1,2	702100	SEAT CUSHION 24" X 15" X 2
1,2	702101	SEAT CUSHION 24" X 16" X 2
1,2	702102	SEAT CUSHION 24" X 17" X 2
1,2	702103	SEAT CUSHION 24" X 18" X 2
1,2	702104	SEAT CUSHION 24" X 19" X 2
1,2	702105	SEAT CUSHION 24" X 20" X 2"
1,2	702106	SEAT CUSHION 24" X 21" X 2"
1,2	702118	SEAT CUSHION 24" X 22" X 2"
>>>>		26" WIDE SEAT CUSHION
1,2	702220	SEAT CUSHION 26" X 18" X 2"
1,2	702221	SEAT CUSHION 26" X 19" X 2"
1,2	702222	SEAT CUSHION 26" X 20" X 2"
1,2	702223	SEAT CUSHION 26" X 21" X 2"

Pos.	Item Number	Description
1,2	702224	SEAT CUSHION 26" X 22" X 2"
>>>>		28" WIDE SEAT CUSHION
1,2	702225	SEAT CUSHION 28" X 18" X 2"
1,2	702226	SEAT CUSHION 28" X 19" X 2"
1,2	702227	SEAT CUSHION 28" X 20" X 2"
1,2	702228	SEAT CUSHION 28" X 21" X 2"
1,2	702229	SEAT CUSHION 28" X 22" X 2"
>>>>		30" WIDE SEAT CUSHION
1,2	702230	SEAT CUSHION 30" X 18" X 2"
1,2	702231	SEAT CUSHION 30" X 19" X 2"
1,2	702232	SEAT CUSHION 30" X 20" X 2"
1,2	702233	SEAT CUSHION 30" X 21" X 2"
1,2	702234	SEAT CUSHION 30" X 22" X 2"

FOLDING ANGLE ADJ BACK FRAME

Note: Zone FLD BCK Kits include brackets and hardware only; back tubes, cross tubes and lanyard must be purchased separately.

Note: if replacing backrest bracket shipped prior to 9/14/12 and the chair is equipped with Aluminum Side Guards, the Rear Side Guard attachment hardware must be replaced.

Note: if replacing parts on chairs shipped prior to 9/14/12, order p/n 116823 or 125784 Back Bracket Kits (new Back Plate Kit is required as Back Plate and mounting hardware have changed).

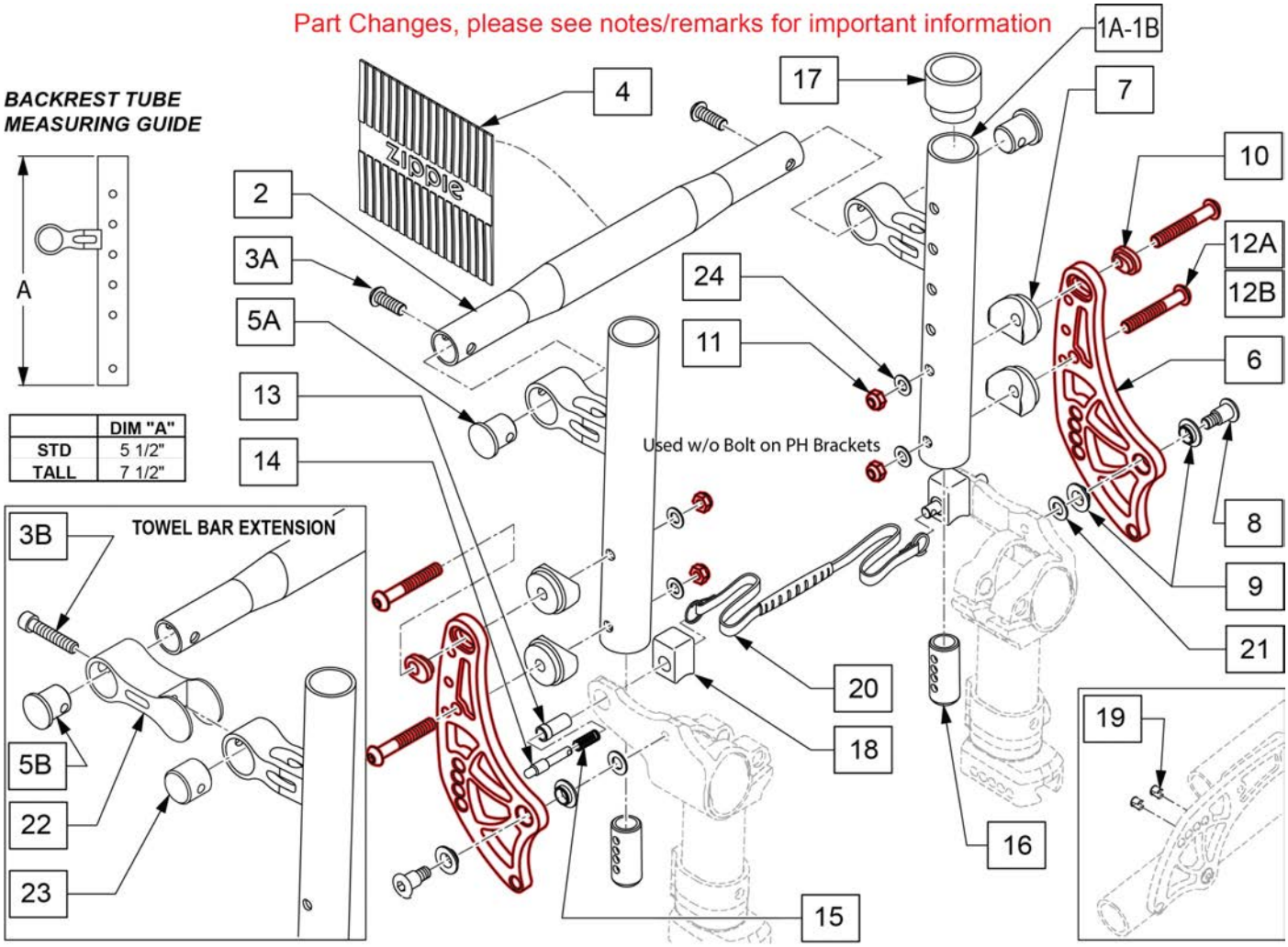

Pos.	Item Number	Description	Remarks
1A	116832S	ZONE STD BCKRST TUBE R	Right - Std
1A	116833S	ZONE STD BCKRST TUBE L	Left - Std
1B	116834S	ZONE TAL BCKRST TUBE R	Right - Tall
1B	116835S	ZONE TAL BCKRST TUBE L	Left - Tall
2,3A,4,5A	116813S	8" BCK STRUT W/ HRDWR	
2,3A,4,5A	116814S	9" BCK STRUT W/ HRDWR	
2,3A,4,5A	116815S	10" BCK STRUT W/ HRDWR	

Pos.	Item Number	Description	Remarks
2,3A,4,5A	116816S	11" BCK STRUT W/ HRDWR	
2,3A,4,5A	116817S	12" BCK STRUT W/ HRDWR	
2,3A,4,5A	116818S	13" BCK STRUT W/ HRDWR	
2,3A,4,5A	116819S	14" BCK STRUT W/ HRDWR	
2,3A,4,5A	116820S	15" BCK STRUT W/ HRDWR	
2,3A,4,5A	116821S	16" BCK STRUT W/ HRDWR	
3A	058901-001	BHCS, M6X1X20,FULL,PL	
3B	118491	SHCS,M6X1X60,PART,PL	Used w/towel bar ext only
4	112312	GRIP TOWEL BAR ZIPPIE	
5A	114521	INSERT ALUMINUM	
5B	118449	INSERT ALUMINUM NON TAP	Used w/towel bar ext only
6	122493	BCKRST BRCKT S/G ADAP	Black-see note above
7	561087	BACK REL SADDLE RIGID	
8	113453	SHOULDER BOLT PED	
9	109198	IGUS BEARING	
10	121915	ADJUSTER BACKREST INSERT THRU	effective 9/14/12; see note for chairs shipped prior to 9/14/12
11	104381	NUT HEX NYLOCK M6X1.0	
12A	102262-007	BHCS,M6X1X45,PART,NP	Used w/o Bolt on PH Brackets
12B	102262-008	BHCS,M6X1X50,PART	Used with Bolt on PH Brackets
13-15	114875	FLD BCK PIN REPLC KIT	
16	112317	BACKREST ADJUST STOP 2mm	
17	561082	1" TUBE END BUSHING THIN	
18	113444	REAR STOP	
19	111173	BACKREST ADJ DELETE PLUG	Qty 8
20	115176	LANYARD THREMO PRESS 9W	Used on 8W chair
20	115177	LANYARD THREMO PRESS 10W	Used on 9W chair
20	115178	LANYARD THREMO PRESS 11W	Used on 10W chair
20	109765	LANYARD THREMO PRESS 12W	Used on 11W chair
20	109766	LANYARD THREMO PRESS 13W	Used on 12W chair
20	109767	LANYARD THREMO PRESS 14W	Used on 13W chair
20	109768	LANYARD THREMO PRESS 15W	Used on 14W chair
20	109769	LANYARD THREMO PRESS 16W	Used on 15W chair
20	109770	LANYARD THERMO-PRESS 17W	Used on 16W chair
21	010963	SPRING BELLEVILLE 8MM	
22	118156	TOWEL BAR EXTENSION	
23	118157	TOWEL BAR EXTENSION PLUG	
24	250104	FLAT WASHER M6	
25	127554	BACKREST SPACER	used when brackets don't line up w/ axle plates
3B,5B,22,23	119402	TOWEL BAR EXTRUSION KIT	Pair
6-19,21,24	116823	ZONE FLD STD BCK KIT	See note; Pair Brackets&Hdwr includes 12A&12B
6-19,21,24	125784	ANO FLD BK BRKTS ZONE PR	Anodized colors;See note; Pair Brackets&Hdwr includes 12A&12B

FOLDING INSET ANGLE ADJ BACK FRAME

Note: Inset Back Kit does not include strut tube or lanyard; these must be purchased separately.

Note: Inset Back is not available with 8" & 9" wide chairs.

Note: if replacing Backrest Bracket parts on chairs shipped prior to 9/14/12, order ZONE FLD INST BCK KIT (new Back Plate Kit is required as Back Plate and mounting hardware have changed).

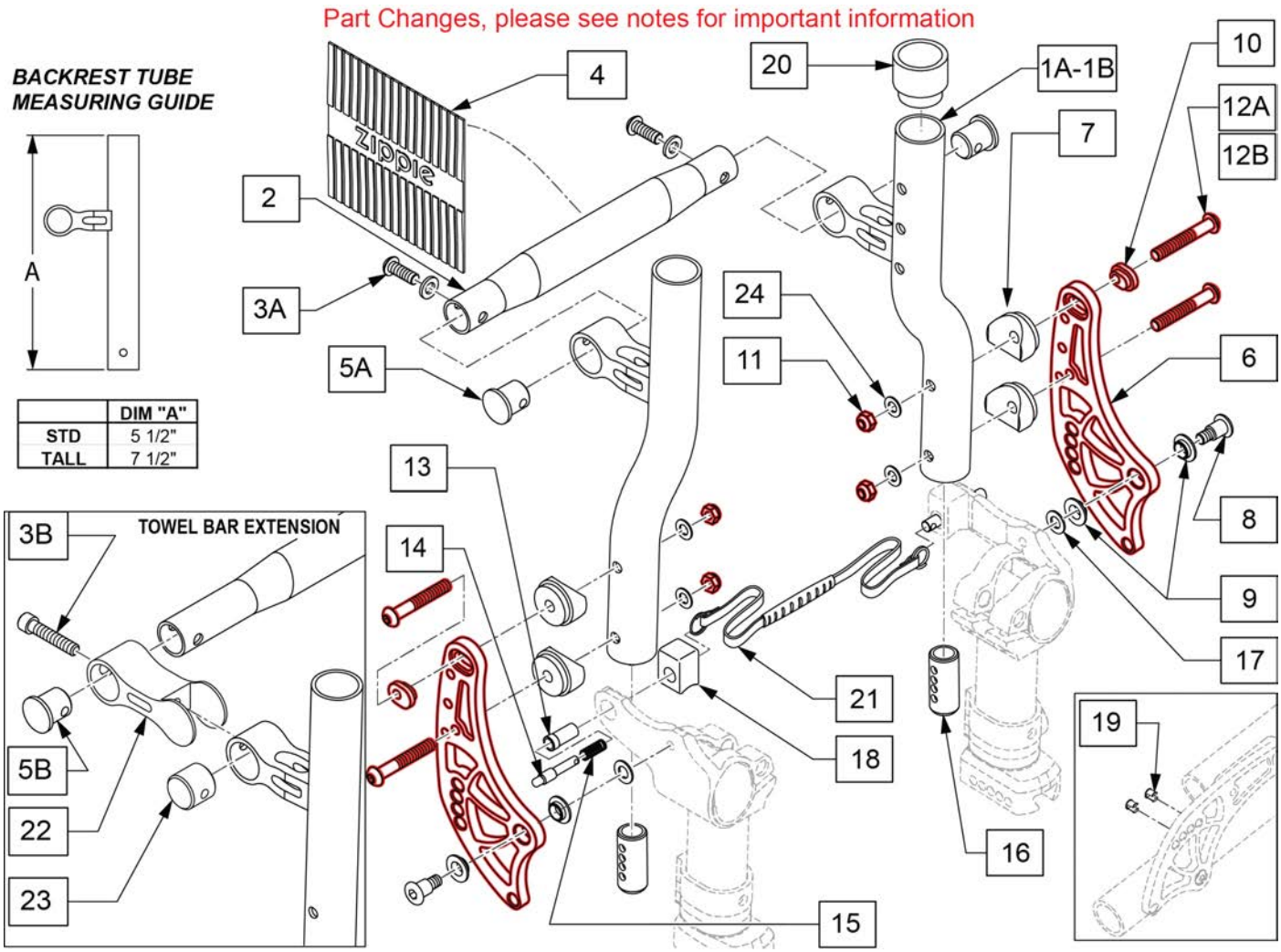

Pos.	Item Number	Description	Remarks
1	116838S	ZONE INST BCKRST TUBE R	Right
1	116839S	ZONE INST BCKRST TUBE L	Left
2,3A,4,5A	116813S	8" BCK STRUT W/ HRDWR	Used w/ 10" wide Frame w/ Inset Backrest
2,3A,4,5A	116814S	9" BCK STRUT W/ HRDWR	Used w/ 11" wide Frame w/ Inset Backrest
2,3A,4,5A	116815S	10" BCK STRUT W/ HRDWR	Used w/ 12" wide Frame w/ Inset Backrest
2,3A,4,5A	116816S	11" BCK STRUT W/ HRDWR	Used w/ 13" wide Frame w/ Inset Backrest
2,3A,4,5A	116817S	12" BCK STRUT W/ HRDWR	Used w/ 14" wide Frame w/ Inset Backrest

Pos.	Item Number	Description	Remarks
2,3A,4,5A	116818S	13" BCK STRUT W/ HRDWR	Used w/ 15" wide Frame w/ Inset Backrest
2,3A,4,5A	116819S	14" BCK STRUT W/ HRDWR	Used w/ 16" wide Frame w/ Inset Backrest
3A	058901-001	BHCS, M6X1X20,FULL,PL	
3B	118491	SHCS,M6X1X60,PART,PL	Used w/towel bar ext only
4	112312	GRIP TOWEL BAR ZIPPIE	
5A	114521	INSERT ALUMINUM	
5B	118449	INSERT ALUMINUM NON TAP	Used w/towel bar ext only
6	122493	BCKRST BRCKT S/G ADAP	Black
7	561087	BACK REL SADDLE RIGID	
8	113453	SHOULDER BOLT PED	
9	109198	IGUS BEARING	
10	121915	ADJUSTER BACKREST INSERT THRU	effective 9/14/12; see note for chairs shipped prior to 9/14/12
11	104381	NUT HEX NYLOCK M6X1.0	
12A	102262-007	BHCS,M6X1X45,PART,NP	Used w/o Bolt on PH Brackets
12B	102262-008	BHCS,M6X1X50,PART	Used with Bolt on PH Brackets
13-15	114875	FLD BCK PIN REPLC KIT	
16	112317	BACKREST ADJUST STOP 2mm	
17	010963	SPRING BELLEVILLE 8MM	
18	113444	REAR STOP	
19	111173	BACKREST ADJ DELETE PLUG	Qty 8
20	561082	1" TUBE END BUSHING THIN	
21	115178	LANYARD THREMO PRESS 11W	Used on 10W chair
21	109765	LANYARD THREMO PRESS 12W	Used on 11W chair
21	109766	LANYARD THREMO PRESS 13W	Used on 12W chair
21	109767	LANYARD THREMO PRESS 14W	Used on 13W chair
21	109768	LANYARD THREMO PRESS 15W	Used on 14W chair
21	109769	LANYARD THREMO PRESS 16W	Used on 15W chair
21	109770	LANYARD THERMO-PRESS 17W	Used on 16W chair
22	118156	TOWEL BAR EXTENSION	
23	118157	TOWEL BAR EXTENSION PLUG	
3B,5B,22,23	119402	TOWEL BAR EXTRUSION KIT	PAIR
6-19,24	116827	ZONE FLD INST BCK KIT	See note; Pair Brackets&Hdwr includes 12A&12B
24	250104	FLAT WASHER M6	
6-9,11-19,21,24	125785	ANO FLD BK BRKTS ZONE PR	Pair; Anodized colors

BACKREST HANDLES

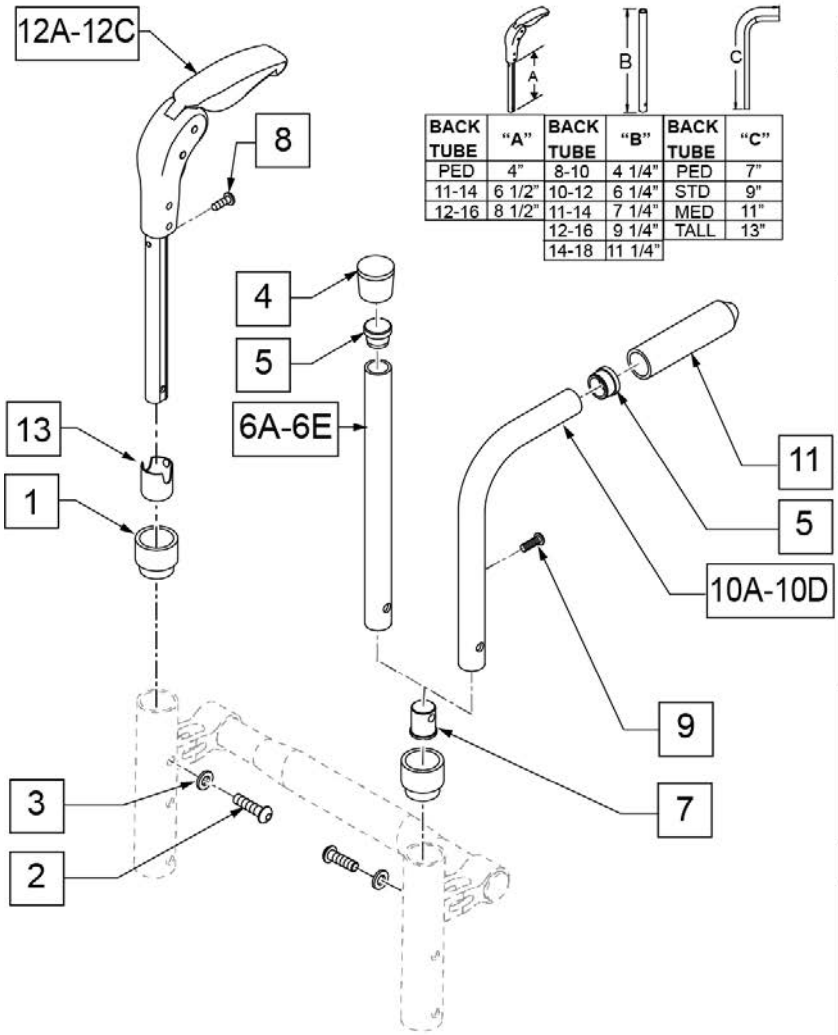

MEASURING GUIDE

BACK TUBE	"A"	BACK TUBE	"B"	BACK TUBE	"C"
PED	4"	8-10	4 1/4"	PED	7"
11-14	6 1/2"	10-12	6 1/4"	STD	9"
12-16	8 1/2"	11-14	7 1/4"	MED	11"
		12-16	9 1/4"	TALL	13"
		14-18	11 1/4"		

BACKREST HEIGHT GUIDE

OMIT Push Handle

	Backrest Type	Handle P/N	Backrest Range
STD UPH	Standard	840116	6" TO 8" (7=7.5, 8=8.5)
	Tall	840115	9" TO 13"
		840111	13" TO 17"
		840113	15" TO 18"
	INSET	840113	11" TO 13"
		840111	14" TO 16"
		840112	16" TO 18"
ADJ UPH	Standard	840116	6" TO 8" (7=7.5, 8=8.5)
	Tall	840115	11" TO 14"
		840112	13" TO 15"
		840113	15" TO 18"
	INSET	840116	11" TO 13"
		840111	14" TO 16"
		840112	16" TO 18"

Integral Push Handle

	Backrest Type	Handle P/N	Backrest Range
STD UPH	Standard	116840	9" TO 10"
	Tall	050253	11" TO 15"
		050254	13" TO 16"
		102093	15" TO 18"
	INSET	116840	12" TO 14"
		050253	14" TO 16"
		050254	16" TO 18"
ADJ UPH	Standard	116840	9" TO 10"
	Tall	050253	11" TO 14"
		050254	13" TO 16"
		102093	15" TO 18"
	INSET	116840	12" TO 14"
		050253	14" TO 16"
		050254	16" TO 18"

Fold Down Push Handle

	Backrest Type	Handle P/N	Backrest Range
ADJ UPH	Standard	116841	11" TO 12"
	Tall	900165	13" TO 16"
		900166	15" TO 18"
	INSET	116841	15" TO 17"
		900165	17" TO 18"

Pos.	Item Number	Description	Pos.	Item Number	Description
1	561082	1" TUBE END BUSHING THIN	2,3,5,7,10D,11	116840	BACK ADJ PUSH HANDLE
2	102262-003	BHCS M6 X 1 X 20 INORGANIC	11	920026	QUICKIE GRIP 3/4" W/INSTR SH.
3	262130	6MM WASHER WAVE	12A	116841	FLDG PUSH HNDL ASSM PED
4	561010	3/4" CAP	12B	900165	FLDG PUSH HNDL ASSM 11"-14"
5	561000-QU	3/4" INSERT PLUG .083	12C	900166S	FLDG PUSH HNDL ASSM 12"-16"
7	050019	PLUG BACKREST M6	13	104369	BUSHING BCKRST FOLDING HANDLE
8	281127	#12 X 3/4" PAN HD PHIL S/TAP	4-6A	840116	BACK ADJ TUBE W/CAP 8-10 KIDZ
9	107384	PAN HEAD PHIL 10-32 X 5/8 ROHS	4-6B	840115	BACK ADJ TUBE W/CAP 10-12 KIDZ
2,3,5,7,10A,11	050253	BACK ADJ PUSH HANDLE STD	4-6C	840111	BACK ADJ TUBE W/CAP 11-14" GP
2,3,5,7,10B,11	050254	BACK ADJ PUSH HANDLE MED	4-6D	840112	BACK ADJ TUBE W/CAP 12-16" GP
2,3,5,7,10C,11	102093	BACK ADJ PUSH HANDLE TALL	4-6E	840113	BACK ADJ TUBE W/CAP 14-18" GP

Note: on 8-10" wide chairs, only one Push Handle is used.

Note: After S/N RZ-010376 (Zone) and R4-025925 (Q7) the Push Handle changed from tubular to double D extrusion. For Telescoping Push Handles prior to these S/Ns replace with proper DD PH RPLCMENT KIT.

Part Changes, please see notes for important information

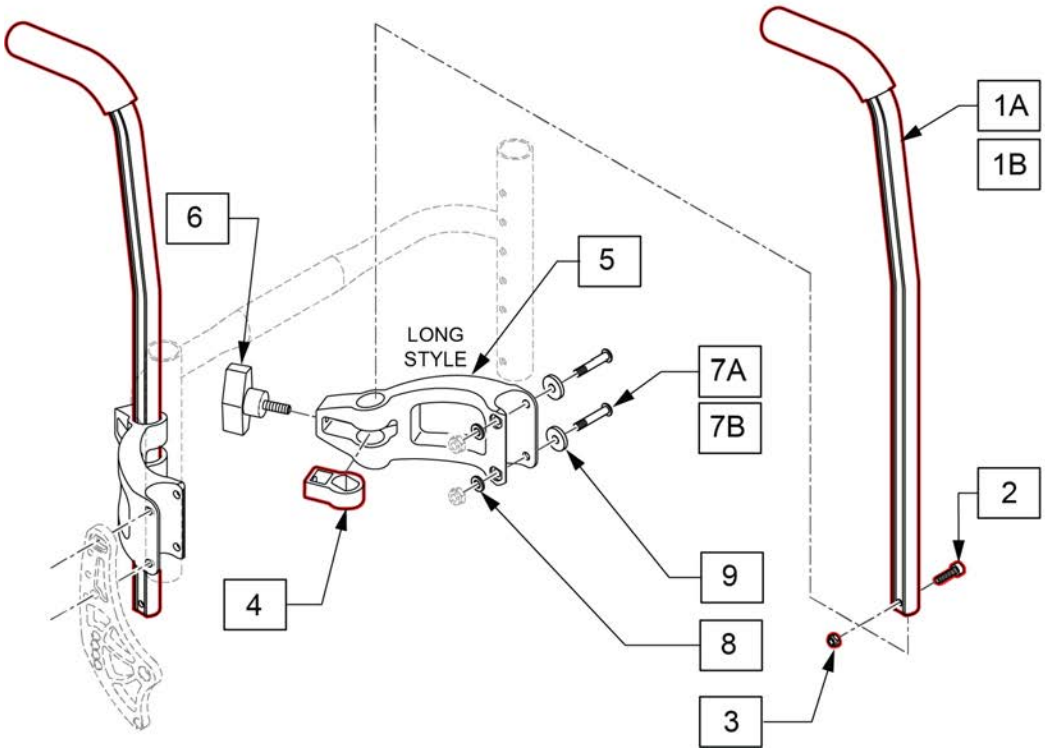

MEASURING GUIDE

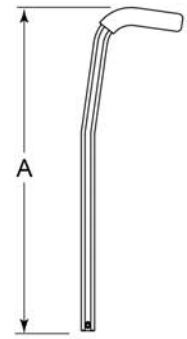

Description	"A"
STD	18"
TALL	24"

Pos.	Item Number	Description	Remarks
1A	129370	ASSY HT ADJ PH DD TALL	For Standard PH Height
1B	129371	ASST HT ADJ PH DD X-TALL	For Tall PH Height
1-4	145122	DD PH RPLCMENT KIT STD PAIR	Std Double D upgrade for existing Bolt On PH
1-4	145123	DD PH RPLCMENT KIT TALL PAIR	Tall Double D upgrade for existing Bolt On PH
1-4	145125	DD PH RPLCMENT KIT STD SINGLE	Std Double D upgrade for existing Bolt On PH, 8-11 WD
1-4	145124	DD PH RPLCMENT KIT TALL SINGLE	Tall Double D upgrade for existing Bolt On PH, 8-11 WD
2	102260-001	SHCS M5X0.8X18 FULL NP	
3	220121	NUT HEX NYLOCK M5 BLACK	
4	129349	INSERT FOR DD TUBE	
5	117074	HGT ADJ PH REC	
6	113245	1/4"-20 T-HANDLE	
7A	113320	BHCS,M6X1X40,PART,PL	Used w/ Std Back Rests
7B	058901-004	BHCS,M6X1X55,PART,PL	Used w/ Inset backrests
8	262130	6mm WAVE WASHER	
9	561026	3/4" WASHER 1/4" HOLE	Zippie Zone only
		Complete Kits	
1A,2-8	145126	BOLT ON PUSH HNDL DD STD PR	Pair; 2 Push Handles-Double D-Std Q7
1B,2-8	145127	BOLT ON PUSH HNDL DD TALL PR	Pair; 2 Push Handles-Double D-Tall Q7

Pos.	Item Number	Description	Remarks
1A,2-9	145128	BLT ON PSH DD PED STD 12-16W PR	Pair; 2 Push Handles-Double D-Std Zone 12-16 wide
1B,2-9	145129	BLT ON PSH DD PED TAL 12-16W PR	Pair; 2 Push Handles-Double D-Tall Zone 12-16 wide
1A,2-9	145130	BOLT ON PUSH DD PED STD 8-11	1 Push Handle-Double D Std Zone 8-11 wide
1B,2-9	145131	BOLT ON PUSH DD PED TALL 8-11	1 Push Handle-Double D-Tall Zone 8-11 wide

Note: For chairs equipped with Inset Backrest, upholstery must be 2" narrower than listed width

Note: 17" & 18" Chair Widths not available with 6-8" Back Heights.

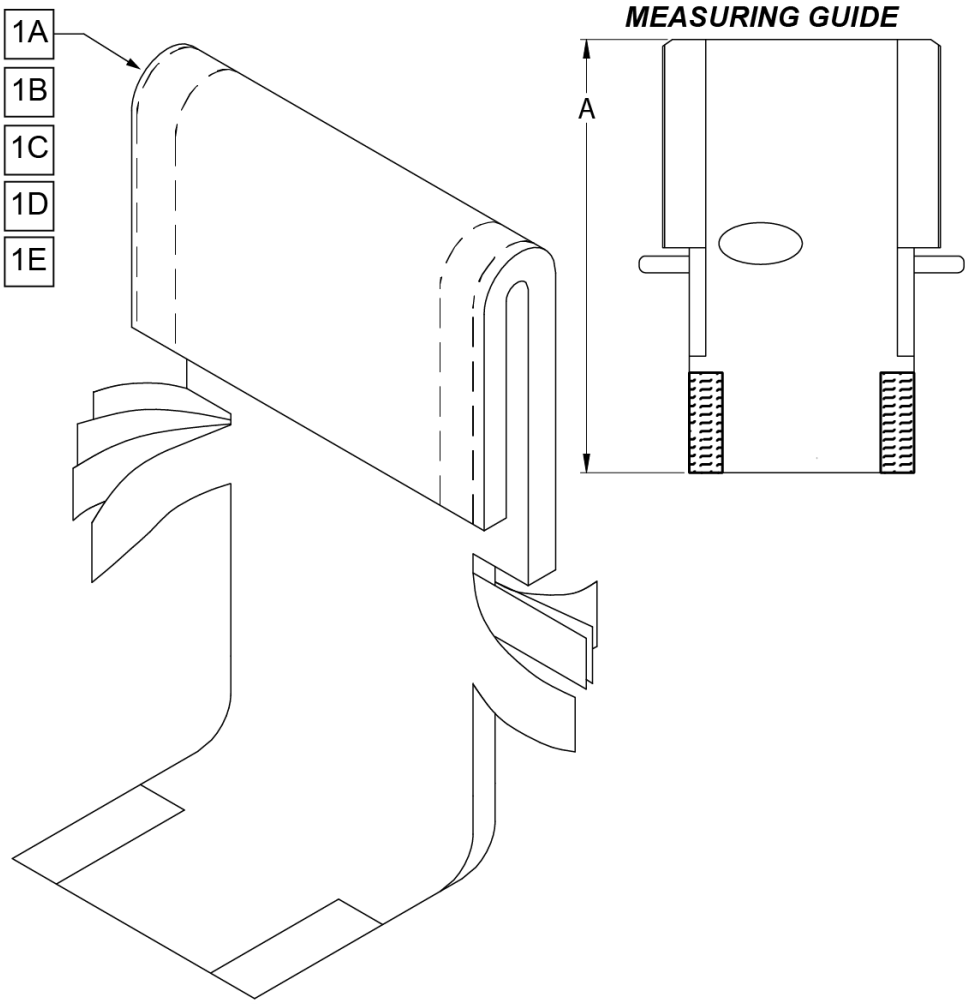

PART #	DESCRIPTION	DIM "A"
116012	BCK UPH 8W, 6-8T	13"
116013	BCK UPH 9W, 6-8T	13"
116014	BCK UPH 10W, 6-8T	13"
116015	BCK UPH 11W, 6-8T	13"
116016	BCK UPH 12W, 6-8T	13"
116017	BCK UPH 13W, 6-8T	13"
116018	BCK UPH 14W, 6-8T	13"
116019	BCK UPH 15W, 6-8T	13"
116020	BCK UPH 16W, 6-8T	13"
115572	BACK UPH 8" 9-14" W/TAIL	26"
115575	BACK UPH 8" 13-18" W/TAIL	30"
115577	BACK UPH 9" 9-14" W/TAIL	26"
115580	BACK UPH 9" 13-18" W/TAIL	30"
115582	BACK UPH 10" 9-14" W/TAIL	26"
115585	BACK UPH 10" 13-18" W/TAIL	30"
115587	BACK UPH 11" 9-14" W/TAIL	26"
115590	BACK UPH 11" 13-18" W/TAIL	30"
115592	BACK UPH 12" 9-14" W/TAIL	26"
115595	BACK UPH 12" 13-18" W/TAIL	30"
115597	BACK UPH 13" 9-14" W/TAIL	26"
115600	BACK UPH 13" 13-18" W/TAIL	30"
115602	BACK UPH 14" 9-14" W/TAIL	26"
115605	BACK UPH 14" 13-18" W/TAIL	30"
115607	BACK UPH 15" 9-14" W/TAIL	26"
115610	BACK UPH 15" 13-18" W/TAIL	30"
115612	BACK UPH 16" 9-14" W/TAIL	26"
115615	BACK UPH 16" 13-18" W/TAIL	30"
680601	BACK UPH 17" 11-15" W/TAIL	28"
680701	BACK UPH 18" 11-15" W/TAIL	28"
680605	BACK UPH 17" 14-18" W/TAIL	31"
680705	BACK UPH 18" 14-18" W/TAIL	31"

Pos.	Item Number	Description	Remarks
1A	116012	BCK UPH 8W, 6-8T W/TAIL	(8" WIDE) 6-8" Tall for Ht Adj Back
1A	116013	BCK UPH 9W, 6-8T W/TAIL	(9" WIDE) 6-8" Tall for Ht Adj Back
1A	116014	BCK UPH 10W, 6-8T W/TAIL	(10" WIDE) 6-8" Tall for Ht Adj Back
1A	116015	BCK UPH 11W, 6-8T W/TAIL	(11" WIDE) 6-8" Tall for Ht Adj Back
1A	116016	BCK UPH 12W, 6-8T W/TAIL	(12" WIDE) 6-8" Tall for Ht Adj Back
1A	116017	BCK UPH 13W, 6-8T W/TAIL	(13" WIDE) 6-8" Tall for Ht Adj Back
1A	116018	BCK UPH 14W, 6-8T W/TAIL	(14" WIDE) 6-8" Tall for Ht Adj Back
1A	116019	BCK UPH 15W, 6-8T W/TAIL	(15" WIDE) 6-8" Tall for Ht Adj Back
1A	116020	BCK UPH 16W, 6-8T W/TAIL	(16" WIDE) 6-8" Tall for Ht Adj Back
1B	115572	BACK UPH 8" 9-14" W/TAIL	(8" WIDE) 9-14" Tall for Ht Adj Back

Pos.	Item Number	Description	Remarks
1B	115577	BACK UPH 9" 9-14" W/TAIL	(9" WIDE) 9-14" Tall for Ht Adj Back
1B	115582	BACK UPH 10" 9-14" W/TAIL	(10" WIDE) 9-14" Tall for Ht Adj Back
1B	115587	BACK UPH 11" 9-14" W/TAIL	(11" WIDE) 9-14" Tall for Ht Adj Back
1B	115592	BACK UPH 12" 9-14" W/TAIL	(12" WIDE) 9-14" Tall for Ht Adj Back
1B	115597	BACK UPH 13" 9-14" W/TAIL	(13" WIDE) 9-14" Tall for Ht Adj Back
1B	115602	BACK UPH 14" 9-14" W/TAIL	(14" WIDE) 9-14" Tall for Ht Adj Back
1B	115607	BACK UPH 15" 9-14" W/TAIL	(15" WIDE) 9-14" Tall for Ht Adj Back
1B	115612	BACK UPH 16" 9-14" W/TAIL	(16" WIDE) 9-14" Tall for Ht Adj Back
1B	680601	BACK UPH 17" 11-15" W/TAIL	(17" WIDE) 11-15" Tall for Ht Adj Back
1B	680701	BACK UPH 18" 11-15" W/TAIL	(18" WIDE) 11-15" Tall for Ht Adj Back
1C	115575	BACK UPH 8" 13-18" W/TAIL	(8" WIDE) 13-18" Tall for Ht Adj Back
1C	115580	BACK UPH 9" 13-18" W/TAIL	(9" WIDE) 13-18" Tall for Ht Adj Back
1C	115585	BACK UPH 10" 13-18" W/TAIL	(10" WIDE) 13-18" Tall for Ht Adj Back
1C	115590	BACK UPH 11" 13-18" W/TAIL	(11" WIDE) 13-18" Tall for Ht Adj Back
1C	115595	BACK UPH 12" 13-18" W/TAIL	(12" WIDE) 13-18" Tall for Ht Adj Back
1C	115600	BACK UPH 13" 13-18" W/TAIL	(13" WIDE) 13-18" Tall for Ht Adj Back
1C	115605	BACK UPH 14" 13-18" W/TAIL	(14" WIDE) 13-18" Tall for Ht Adj Back
1C	115610	BACK UPH 15" 13-18" W/TAIL	(15" WIDE) 13-18" Tall for Ht Adj Back
1C	115615	BACK UPH 16" 13-18" W/TAIL	(16" WIDE) 13-18" Tall for Ht Adj Back
1C	680605	BACK UPH 17" 14-18" W/TAIL	(17" WIDE) 14-18" Tall for Ht Adj Back
1C	680705	BACK UPH 18" 14-18" W/TAIL	(18" WIDE) 14-18" Tall for Ht Adj Back

Note: For Inset Backrest Upholstery must be 2" narrower than listed width

Note: 17" & 18" wide chairs are not available with 9-13" Back Heights.

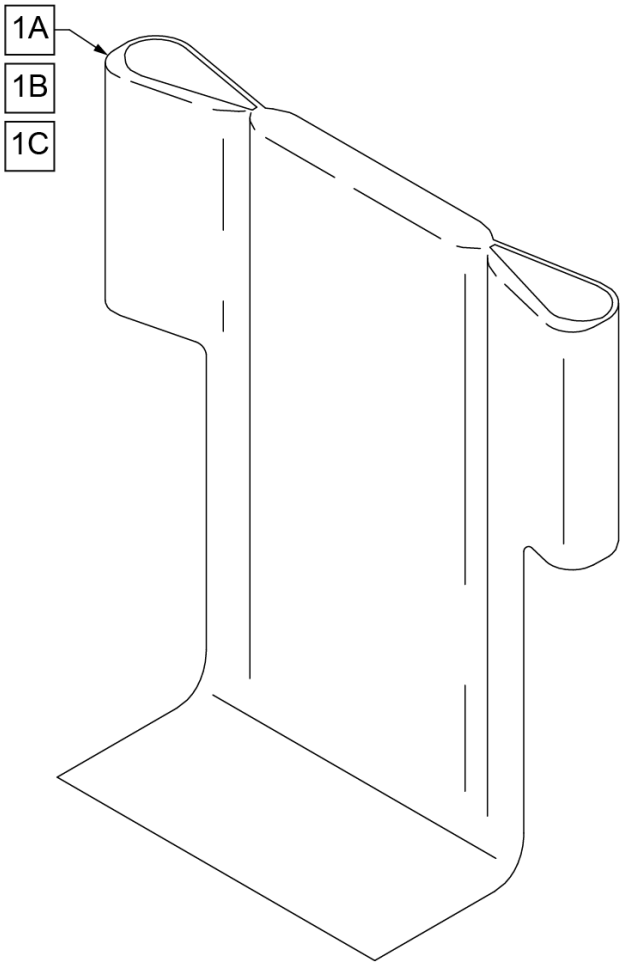

MEASURING GUIDE

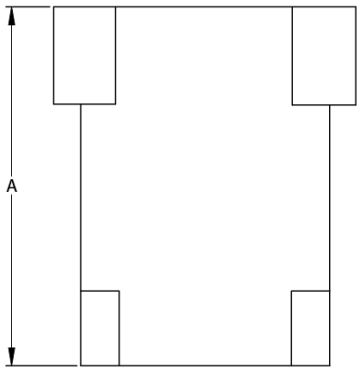

PART #	DESCRIPTION	DIM "A"
115616	BCK UPH 8", 9-13	16"
115617	BCK UPH 8", 11-14/12-16	19"
115618	BACK UPH 8" WID, 14-18	21"
115619	BCK UPH 9", 9-13	16"
115620	BCK UPH 9", 11-14/12-16	19"
115621	BACK UPH 9" WID, 14-18	21"
115622	BCK UPH 10", 9-13	16"
115623	BCK UPH 10", 11-14/12-16	19"
115624	BACK UPH 10" WID, 14-18	21"
115625	BCK UPH 11", 9-13	16"
115626	BCK UPH 11", 11-14/12-16	19"
115627	BACK UPH 11" WID, 14-18	21"
115628	BCK UPH 12", 9-13	16"
115629	BCK UPH 12", 11-14/12-16	19"
115630	BACK UPH 12" WID, 14-18	21"
115631	BCK UPH 13", 9-13	16"
115632	BCK UPH 13", 11-14/12-16	19"
115633	BACK UPH 13" WID, 14-18	21"
115634	BCK UPH 14", 9-13	16"
115635	BCK UPH 14", 11-14/12-16	19"
115636	BACK UPH 14" WID, 14-18	21"
115637	BCK UPH 15", 9-13	16"
115638	BCK UPH 15", 11-14/12-16	19"
115639	BACK UPH 15" WID, 14-18	21"
115640	BCK UPH 16", 9-13	16"
115641	BCK UPH 16", 11-14/12-16	19"
115642	BACK UPH 16" WID, 14-18	21"
680457	BACK UPH 17", 11-14/12-16	19"
680458	BACK UPH 18", 11-14/12-16	19"
680467	BACK UPH 17" WID, 14-18	21"
680468	BACK UPH 18" WID, 14-18	21"

Pos.	Item Number	Description	Remarks
1A	115616	BCK UPH 8", 9-13	8" Wide 9-13" BACK HEIGHT
1A	115619	BCK UPH 9", 9-13	9" Wide 9-13" BACK HEIGHT
1A	115622	BCK UPH 10", 9-13	10" Wide 9-13" BACK HEIGHT
1A	115625	BCK UPH 11", 9-13	11" Wide 9-13" BACK HEIGHT
1A	115628	BCK UPH 12", 9-13	12" Wide 9-13" BACK HEIGHT
1A	115631	BCK UPH 13", 9-13	13" Wide 9-13" BACK HEIGHT
1A	115634	BCK UPH 14", 9-13	14" Wide 9-13" BACK HEIGHT
1A	115637	BCK UPH 15", 9-13	15" Wide 9-13" BACK HEIGHT
1A	115640	BCK UPH 16", 9-13	16" Wide 9-13" BACK HEIGH
1B	115617	BCK UPH 8", 11-14/12-16	8" Wide 11 -14" & 12 -16" BACK HEIGHT
1B	115620	BCK UPH 9", 11-14/12-16	9" Wide 11 -14" & 12 -16" BACK HEIGHT
1B	115623	BCK UPH 10", 11-14/12-16	10" Wide 11 -14" & 12 -16" BACK HEIGHT
1B	115626	BCK UPH 11", 11-14/12-16	11" Wide 11 -14" & 12 -16" BACK HEIGHT
1B	115629	BCK UPH 12", 11-14/12-16	12" Wide 11 -14" & 12 -16" BACK HEIGHT

Pos.	Item Number	Description	Remarks
1B	115632	BCK UPH 13", 11-14/12-16	13" Wide 11 -14" & 12 -16" BACK HEIGHT
1B	115635	BCK UPH 14", 11-14/12-16	14" Wide 11 -14" & 12 -16" BACK HEIGHT
1B	115638	BCK UPH 15", 11-14/12-16	15" Wide 11 -14" & 12 -16" BACK HEIGHT
1B	115641	BCK UPH 16", 11-14/12-16	16" Wide 11 -14" & 12 -16" BACK HEIGHT
1B	680457	BACK UPH 17" 11-14/12-16 RDG	17" Wide 11-14" & 12-16" BACK HEIGHT
1B	680458	BACK UPH 18" 11-14/12-16 RDG	18" Wide 11-14" & 12-16" BACK HEIGHT
1C	115618	BACK UPH 8" WID, 14-18	8" Wide 14-18" BACK HEIGHT
1C	115621	BACK UPH 9" WID, 14-18	9" Wide 14-18" BACK HEIGHT
1C	115624	BACK UPH 10" WID, 14-18	10" Wide 14-18" BACK HEIGHT
1C	115627	BACK UPH 11" WID, 14-18	11" Wide 14-18" BACK HEIGHT
1C	115630	BACK UPH 12" WID, 14-18	12" Wide 14-18" BACK HEIGHT
1C	115633	BACK UPH 13" WID, 14-18	13" Wide 14-18" BACK HEIGHT
1C	115636	BACK UPH 14" WID, 14-18	14" Wide 14-18" BACK HEIGHT
1C	115639	BACK UPH 15" WID, 14-18	15" Wide 14-18" BACK HEIGHT
1C	115642	BACK UPH 16" WID, 14-18	16" Wide 14-18" BACK HEIGHT
1C	680467	BACK UPH 17" 14-18 RDG	17" Wide 14-18" BACK HEIGHT
1C	680468	BACK UPH 18" 14-18 RDG	18" Wide 14-18" BACK HEIGHT

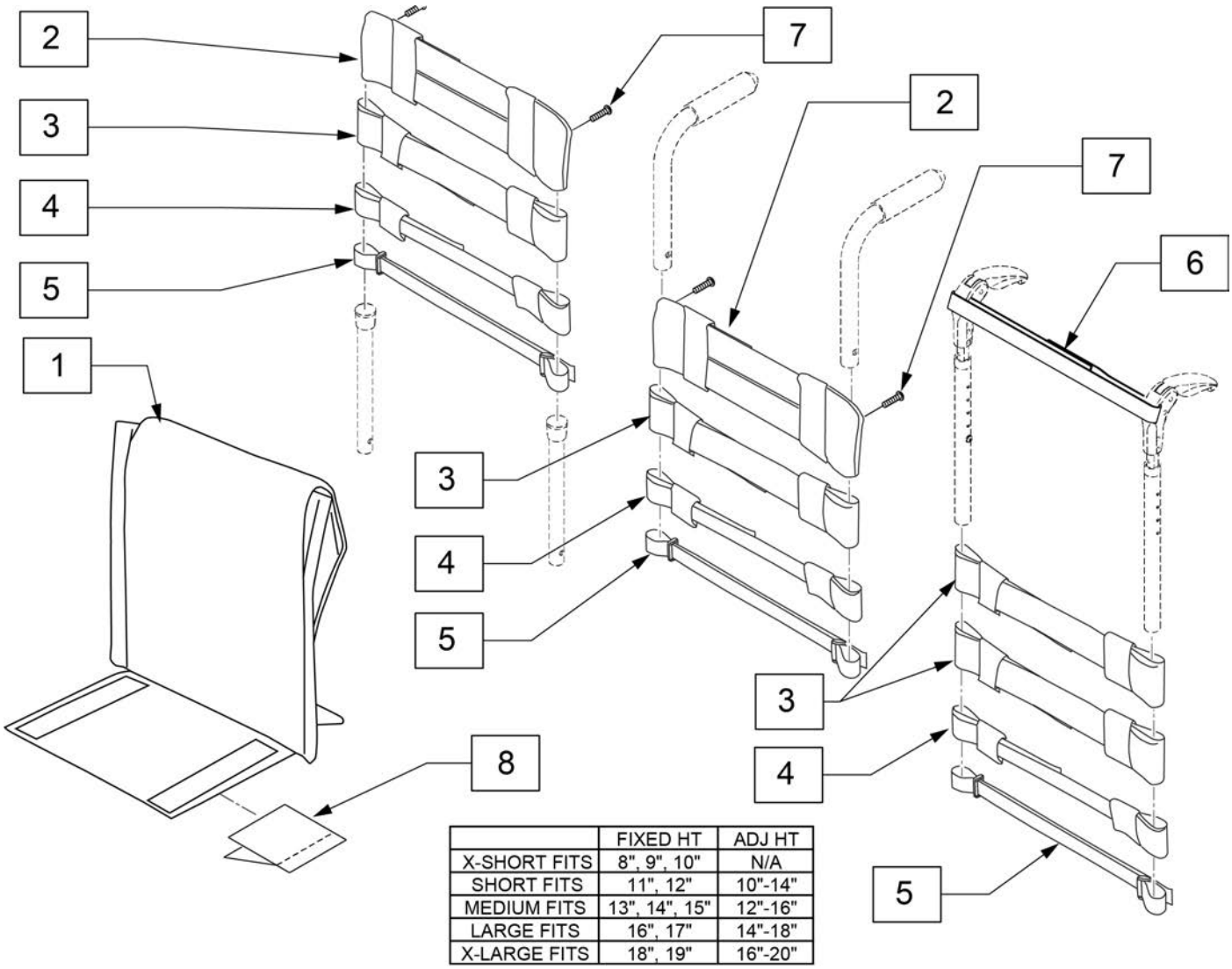

	FIXED HT	ADJ HT
X-SHORT FITS	8", 9", 10"	N/A
SHORT FITS	11", 12"	10"-14"
MEDIUM FITS	13", 14", 15"	12"-16"
LARGE FITS	16", 17"	14"-18"
X-LARGE FITS	18", 19"	16"-20"

Pos.	Item Number	Description	Remarks
2	115285	TOP CAP, STD, 9-10	Used for omit push handle & Integral Push Handle only
2	113712	TOP CAP, STD, 11-12	Used for omit push handle & Integral Push Handle only
2	113713	TOP CAP, STD, 13-14	Used for omit push handle & Integral Push Handle only
2	113714	TOP CAP, STD, 15-16	Used for omit push handle & Integral Push Handle only
2	113715	TOP CAP, STD, 17-18	Used for omit push handle & Integral Push Handle only
3	115287	STRAP PADDED 2IN, 9-10	
3	113727	STRAP PADDED 2IN, 11-12	
3	113728	STRAP PADDED 2IN, 13-14	
3	113729	STRAP PADDED 2IN, 15-16	
3	113730	STRAP PADDED 2IN, 17-18	
4	115288	STRAP PADDED 1IN, 9-10	
4	113732	STRAP PADDED 1IN, 11-12	
4	113733	STRAP PADDED 1IN, 13-14	
4	113734	STRAP PADDED 1IN, 15-16	
4	113735	STRAP PADDED 1IN, 17-18	
4	113736	STRAP PADDED 1IN, 19-20	
5	115775	POSITION STRAP 1IN, 9-10	
5	113717	POSITION STRAP 1IN, 11-12	

Pos.	Item Number	Description	Remarks
5	113718	POSITION STRAP 1IN, 13-14	
5	113719	POSITION STRAP 1IN, 15-16	
5	113720	POSITION STRAP 1IN, 17-18	
6	052435-006	UPH VNTD ADJ FPH STRP 10-11"W	Fold Down Push Handles only
6	052435-001	UPH VNTD ADJ FPH STRP 12-13W	Fold Down Push Handles only
6	052435-002	UPH VNTD ADJ FPH STRP 14-15W	Fold Down Push Handles only
6	052435-003	UPH VNTD ADJ FPH STRP 16-17W	Fold Down Push Handles only
6	052435-004	UPH,VNTD ADJ.,FPH STRP,18-20"W	Fold Down Push Handles only
7	107384	PAN HEAD PHIL 10-32 X 5/8 ROHS	Used for omit push handle & Integral Push Handle only
8	116520	HOOK AND LOOP INSET BACK	Used for Inset Back only.
2-7	116852	ADJ UPH 9-10W STRAP KIT	
2-7	114879	ADJ UPH 11-12W STRAP KIT	
2-7	114880	ADJ UPH 13-14W STRAP KIT	
2-7	114881	ADJ UPH 15-16W STRAP KIT	
2-7	114882	ADJ UPH 17-18W STRAP KIT	
1-7	116853	ZIP ADJ UPH 10W X-SHT ASM	
1-7	116854	ZIP ADJ UPH 10W SHT ASM	
1-7	116855	ZIP ADJ UPH 10W MED ASM	
1-7	116856	ZIP ADJ UPH 10W TAL ASM	
1-7	116857	ZIP ADJ UPH 11W X-SHT ASM	
1-7	116858	ZIP ADJ UPH 11W SHT ASM	
1-7	116859	ZIP ADJ UPH 11W MED ASM	
1-7	116860	ZIP ADJ UPH 11W TAL ASM	
1-7	116861	ZIP ADJ UPH 12W X-SHT ASM	
1-7	116862	ZIP ADJ UPH 12W SHT ASM	
1-7	116863	ZIP ADJ UPH 12W MED ASM	
1-7	116864	ZIP ADJ UPH 12W TAL ASM	
1-7	116865	ZIP ADJ UPH 13W X-SHT ASM	
1-7	116866	ZIP ADJ UPH 13W SHT ASM	
1-7	116867	ZIP ADJ UPH 13W MED ASM	
1-7	116868	ZIP ADJ UPH 13W TAL ASM	
1-7	116869	ZIP ADJ UPH 14W X-SHT ASM	
1-7	116870	ZIP ADJ UPH 14W SHT ASM	
1-7	116871	ZIP ADJ UPH 14W MED ASM	
1-7	116872	ZIP ADJ UPH 14W TAL ASM	
1-7	116873	ZIP ADJ UPH 15W X-SHT ASM	
1-7	116874	ZIP ADJ UPH 15W SHT ASM	
1-7	116875	ZIP ADJ UPH 15W MED ASM	
1-7	116876	ZIP ADJ UPH 15W TAL ASM	
1-7	116877	ZIP ADJ UPH 16W X-SHT ASM	
1-7	116878	ZIP ADJ UPH 16W SHT ASM	
1-7	116879	ZIP ADJ UPH 16W MED ASM	
1-7	116880	ZIP ADJ UPH 16W TAL ASM	
1-7	113321-026	ADJ UPH 17W X-SHT ASM	
1-7	113321-027	ADJ UPH 17W SHT ASM	
1-7	113321-028	ADJ UPH 17W MED ASM	
1-7	113321-029	ADJ UPH 17W TALL ASM	
1-7	113321-031	ADJ UPH 18W X-SHT ASM	
1-7	113321-032	ADJ UPH 18W SHT ASM	
1-7	113321-033	ADJ UPH 18W MED ASM	
1-7	113321-034	ADJ UPH 18W TALL ASM	

Note: each back height uses a different variation of back straps; replacement strap kits contain more straps than needed to support all back heights.

Note: this upholstery is not offered on 8"-9" Std Back widths and 8"-11" chair widths with Inset Back.

Note: for Inset Backrest upholstery must be 2" narrower than listed width.

ALUMINUM TUBULAR prior to S/N R4-023230

Note: in order to prevent deformation of the Footrest Tube do not over tighten Item (1). Max torque is 62 inch pounds.

Note: For High Mount Footrest Clamp part numbers please refer to the High Mount Footrest Clamp parts manual page.

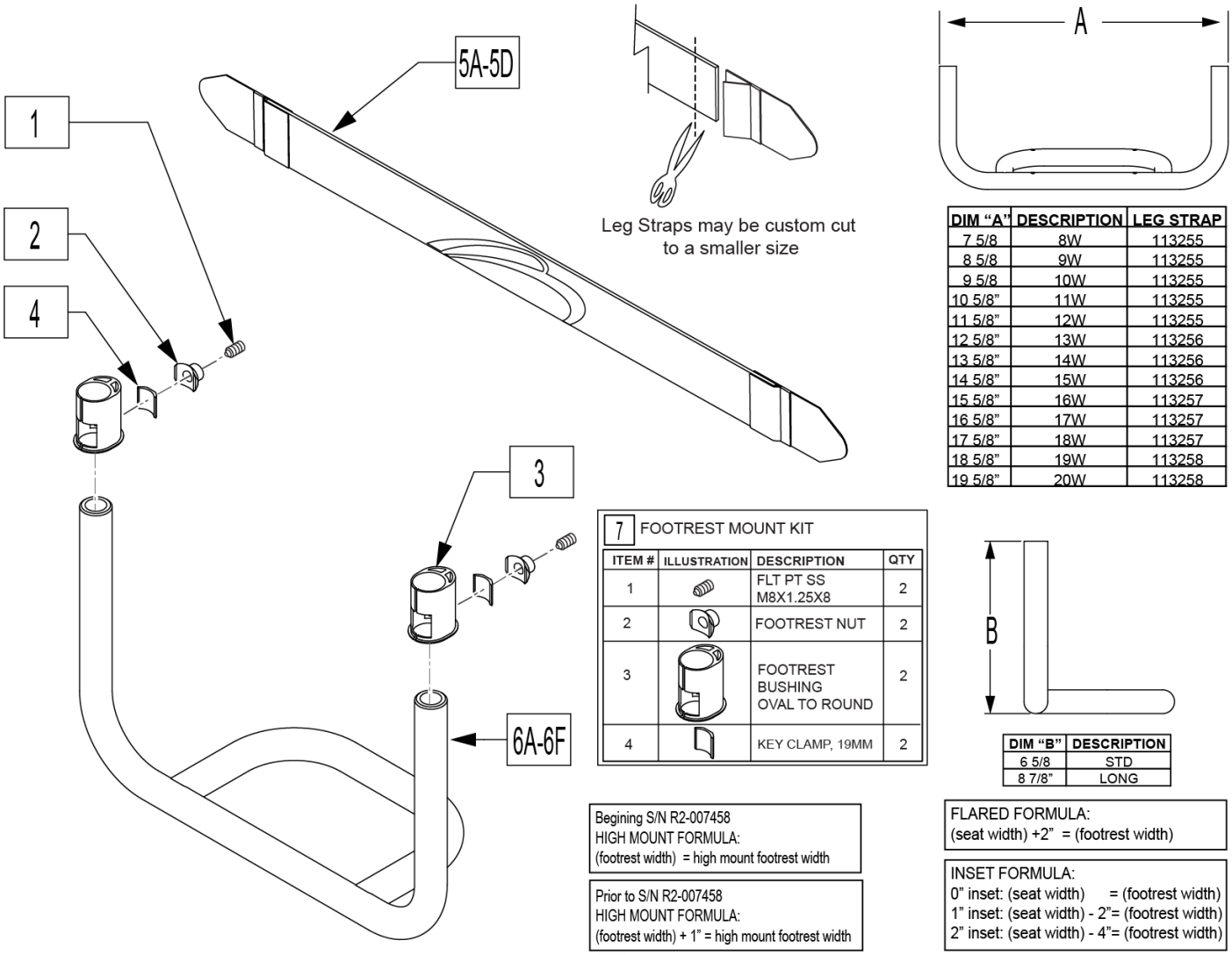

DIM "A"	DESCRIPTION	LEG STRAP
7 5/8	8W	113255
8 5/8	9W	113255
9 5/8	10W	113255
10 5/8"	11W	113255
11 5/8"	12W	113255
12 5/8"	13W	113256
13 5/8"	14W	113256
14 5/8"	15W	113256
15 5/8"	16W	113257
16 5/8"	17W	113257
17 5/8"	18W	113257
18 5/8"	19W	113258
19 5/8"	20W	113258

7 FOOTREST MOUNT KIT

ITEM #	ILLUSTRATION	DESCRIPTION	QTY
1		FLT PT SS M8X1.25X8	2
2		FOOTREST NUT	2
3		FOOTREST BUSHING OVAL TO ROUND	2
4		KEY CLAMP, 19MM	2

DIM "B"	DESCRIPTION
6 5/8	STD
8 7/8"	LONG

Begining S/N R2-007458
HIGH MOUNT FORMULA:
(footrest width) = high mount footrest width

Prior to S/N R2-007458
HIGH MOUNT FORMULA:
(footrest width) + 1" = high mount footrest width

FLARED FORMULA:
(seat width) +2" = (footrest width)

INSET FORMULA:
0" inset: (seat width) = (footrest width)
1" inset: (seat width) - 2"= (footrest width)
2" inset: (seat width) - 4"= (footrest width)

Pos.	Item Number	Description	Remarks
1	112339	FLT PT SS M8X1.25X8	
2	112648	FOOTREST NUT	
3	112348	FOOTREST BUSHING OVAL TO ROUND	
4	112651	KEY CLAMP, 19MM	
5A	113255	LEG STRAP 11"-12" BLK	
5B	113256	LEG STRAP 13"-15" BLK	
5C	113257	LEG STRAP 16"-18" BLK	
5D	113258	LEG STRAP 19"-20" BLK	
7	114934	FTRST MOUNT KIT	
1-4,5A,6D	114935	TBLAR FTRST 75FA 10W LNG KIT	Q7 only-Frame angle A

Pos.	Item Number	Description	Remarks
1-4,5A,6A	114936	TBLAR FTRST 75FA 10W STD KIT	Q7 only-Frame angle A
1-4,5A,6D	114937	TBLAR FTRST 75FA 11W LNG KIT	Q7 only-Frame angle A
1-4,5A,6A	114938	TBLAR FTRST 75FA 11W STD KIT	Q7 only-Frame angle A
1-4,5A,6D	114939	TBLAR FTRST 75FA 12W LNG KIT	Q7 only-Frame angle A
1-4,5A,6A	114940	TBLAR FTRST 75FA 12W STD KIT	Q7 only-Frame angle A
1-4,5B,6D	114941	TBLAR FTRST 75FA 13W LNG KIT	Q7 only-Frame angle A
1-4,5B,6A	114942	TBLAR FTRST 75FA 13W STD KIT	Q7 only-Frame angle A
1-4,5B,6D	114943	TBLAR FTRST 75FA 14W LNG KIT	Q7 only-Frame angle A
1-4,5B,6A	114944	TBLAR FTRST 75FA 14W STD KIT	Q7 only-Frame angle A
1-4,5B,6D	114945	TBLAR FTRST 75FA 15W LNG KIT	Q7 only-Frame angle A
1-4,5B,6A	114946	TBLAR FTRST 75FA 15W STD KIT	Q7 only-Frame angle A
1-4,5C,6D	114947	TBLAR FTRST 75FA 16W LNG KIT	Q7 only-Frame angle A
1-4,5C,6A	114948	TBLAR FTRST 75FA 16W STD KIT	Q7 only-Frame angle A
1-4,5C,6D	114949	TBLAR FTRST 75FA 17W LNG KIT	Q7 only-Frame angle A
1-4,5C,6A	114950	TBLAR FTRST 75FA 17W STD KIT	Q7 only-Frame angle A
1-4,5C,6D	114951	TBLAR FTRST 75FA 18W LNG KIT	Q7 only-Frame angle A
1-4,5C,6A	114952	TBLAR FTRST 75FA 18W STD KIT	Q7 only-Frame angle A
1-4,5D,6D	114953	TBLAR FTRST 75FA 19W LNG KIT	Q7 only-Frame angle A
1-4,5D,6A	114954	TBLAR FTRST 75FA 19W STD KIT	Q7 only-Frame angle A
1-4,5D,6D	114955	TBLAR FTRST 75FA 20W LNG KIT	Q7 only-Frame angle A
1-4,5D,6A	114956	TBLAR FTRST 75FA 20W STD KIT	Q7 only-Frame angle A
1-4,5A,6G	116845	TBLAR FTRST 80FA 8W STD KIT	Zippie Zone only
1-4,5A,6G	116844	TBLAR FTRST 80FA 8W LNG KIT	Zippie Zone only
1-4,5A,6G	116847	TBLAR FTRST 80FA 9W STD KIT	Zippie Zone only
1-4,5A,6G	116846	TBLAR FTRST 80FA 9W LNG KIT	Zippie Zone only
1-4,5A,6E	114957	TBLAR FTRST 80FA 10W LNG KIT	Frame angle B
1-4,5A,6B	114958	TBLAR FTRST 80FA 10W STD KIT	Frame angle B
1-4,5A,6E	114959	TBLAR FTRST 80FA 11W LNG KIT	Frame angle B
1-4,5A,6B	114960	TBLAR FTRST 80FA 11W STD KIT	Frame angle B
1-4,5A,6E	114961	TBLAR FTRST 80FA 12W LNG KIT	Frame angle B
1-4,5A,6B	114962	TBLAR FTRST 80FA 12W STD KIT	Frame angle B
1-4,5B,6E	114963	TBLAR FTRST 80FA 13W LNG KIT	Frame angle B
1-4,5B,6B	114964	TBLAR FTRST 80FA 13W STD KIT	Frame angle B
1-4,5B,6E	114965	TBLAR FTRST 80FA 14W LNG KIT	Frame angle B
1-4,5B,6B	114966	TBLAR FTRST 80FA 14W STD KIT	Frame angle B
1-4,5B,6E	114967	TBLAR FTRST 80FA 15W LNG KIT	Frame angle B
1-4,5B,6B	114968	TBLAR FTRST 80FA 15W STD KIT	Frame angle B
1-4,5C,6E	114969	TBLAR FTRST 80FA 16W LNG KIT	Frame angle B
1-4,5C,6B	114970	TBLAR FTRST 80FA 16W STD KIT	Frame angle B
1-4,5C,6E	114971	TBLAR FTRST 80FA 17W LNG KIT	Frame angle B
1-4,5C,6B	114972	TBLAR FTRST 80FA 17W STD KIT	Frame angle B
1-4,5C,6E	114973	TBLAR FTRST 80FA 18W LNG KIT	Frame angle B
1-4,5C,6B	114974	TBLAR FTRST 80FA 18W STD KIT	Frame angle B
1-4,5D,6E	114975	TBLAR FTRST 80FA 19W LNG KIT	Frame angle B
1-4,5D,6B	114976	TBLAR FTRST 80FA 19W STD KIT	Frame angle B
1-4,5D,6E	114977	TBLAR FTRST 80FA 20W LNG KIT	Frame angle B
1-4,5D,6B	114978	TBLAR FTRST 80FA 20W STD KIT	Frame angle B
1-4,5A,6F	114979	TBLAR FTRST 85FA 10W LNG KIT	Q7 only-Frame angle C
1-4,5A,6C	114980	TBLAR FTRST 85FA 10W STD KIT	Q7 only-Frame angle C
1-4,5A,6F	114981	TBLAR FTRST 85FA 11W LNG KIT	Q7 only-Frame angle C
1-4,5A,6C	114982	TBLAR FTRST 85FA 11W STD KIT	Q7 only-Frame angle C
1-4,5A,6F	114983	TBLAR FTRST 85FA 12W LNG KIT	Q7 only-Frame angle C
1-4,5A,6C	114984	TBLAR FTRST 85FA 12W STD KIT	Q7 only-Frame angle C
1-4,5B,6F	114985	TBLAR FTRST 85FA 13W LNG KIT	Q7 only-Frame angle C
1-4,5B,6C	114986	TBLAR FTRST 85FA 13W STD KIT	Q7 only-Frame angle C
1-4,5B,6F	114987	TBLAR FTRST 85FA 14W LNG KIT	Q7 only-Frame angle C
1-4,5B,6C	114988	TBLAR FTRST 85FA 14W STD KIT	Q7 only-Frame angle C

Pos.	Item Number	Description	Remarks
1-4,5B,6F	114989	TBLAR FTRST 85FA 15W LNG KIT	Q7 only-Frame angle C
1-4,5B,6C	114990	TBLAR FTRST 85FA 15W STD KIT	Q7 only-Frame angle C
1-4,5C,6F	114991	TBLAR FTRST 85FA 16W LNG KIT	Q7 only-Frame angle C
1-4,5C,6C	114992	TBLAR FTRST 85FA 16W STD KIT	Q7 only-Frame angle C
1-4,5C,6F	114993	TBLAR FTRST 85FA 17W LNG KIT	Q7 only-Frame angle C
1-4,5C,6C	114994	TBLAR FTRST 85FA 17W STD KIT	Q7 only-Frame angle C
1-4,5C,6F	114995	TBLAR FTRST 85FA 18W LNG KIT	Q7 only-Frame angle C
1-4,5C,6C	114996	TBLAR FTRST 85FA 18W STD KIT	Q7 only-Frame angle C
1-4,5D,6F	114997	TBLAR FTRST 85FA 19W LNG KIT	Q7 only-Frame angle C
1-4,5D,6C	114998	TBLAR FTRST 85FA 19W STD KIT	Q7 only-Frame angle C
1-4,5D,6F	114999	TBLAR FTRST 85FA 20W LNG KIT	Q7 only-Frame angle C
1-4,5D,6C	115000	TBLAR FTRST 85FA 20W STD KIT	Q7 only-Frame angle C

Note: in order for wear pads to properly bond to the footrest tubes, secure with cable ties for 24 hours after adhering.

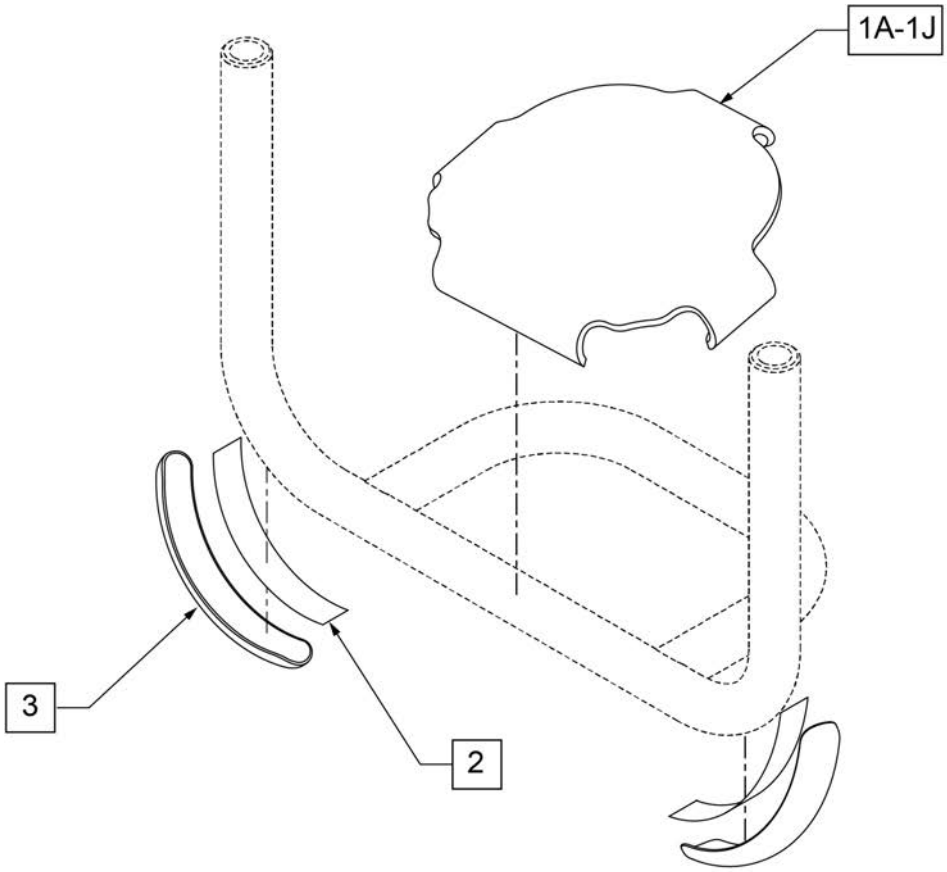

MEASURING GUIDE

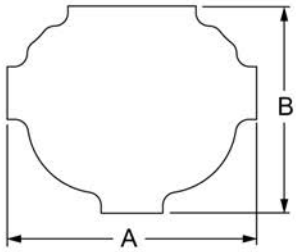

PART #	DIM "A"	DIM "B"
101461-001	6	5
101461-002	7	5
101461-003	8	5
101461-004	9	5
101461-005	10	5
101461-006	11	5
101461-007	12	5
101461-008	13	5
101461-013	4	5

FOOTPLATE FORMULA
0" Inset (Seat Width) = Footrest Width
1" Inset (Seat Width) -2 = Footrest Width
2" Inset (Seat Width) -4 = Footrest Width
V Hanger (Seat Width) -4 = Footrest Width

FLARED FORMULA:
(seat width) +2" = (footrest width)

CHAIR	DIM A / SIZE	8 5/8 / 8w & 9w	10 5/8 / 10 & 11 w	11 5/8 / 12 w	12 5/8 / 13 w	13 5/8 / 14 w	14 5/8 / 15 w	15 5/8 / 16 w	16 5/8 / 17 w	17 5/8 / 18 w	18 5/8 / 19 w	19 5/8 / 20 w
GT		N/A	101461-002	101461-002	101461-002	101461-004	101461-004	101461-006	101461-006	101461-008	101461-008	101461-008
GTX		N/A	N/A	101461-002	101461-002	101461-002	101461-004	101461-004	101461-006	101461-006	101461-008	101461-008
GTI		N/A	101461-001	101461-002	101461-003	101461-004	101461-005	101461-006	101461-007	101461-008	101461-008	101461-008
Q7		N/A	101461-001	101461-002	101461-003	101461-004	101461-005	101461-006	101461-007	101461-008	101461-008	101461-008
ZIPPIE ZONE		101461-013	101461-001	101461-002	101461-003	101461-004	101461-005	101461-006	101461-007	101461-008	N/A	N/A

Pos.	Item Number	Description	Remarks
1A	101461-013	COVER FOOTREST SNAP ON 9W	
1B	101461-001	COVER FOOTREST SNAP-ON 11" W	
1C	101461-002	COVER FOOTREST SNAP-ON 12" W	
1D	101461-003	COVER FOOTREST SNAP-ON 13" W	
1E	101461-004	COVER FOOTREST SNAP-ON 14" W	
1F	101461-005	COVER FOOTREST SNAP-ON 15" W	
1G	101461-006	COVER FOOTREST SNAP-ON 16" W	
1H	101461-007	COVER FOOTREST SNAP-ON 17" W	
1J	101461-008	COVER FOOTREST SNAP-ON 18" W	
2,3	103107	WEAR PAD W/ ADHESIVE	Includes cable ties

ALUMINUM PLATFORM FOOTREST

Note: In order to prevent deformation of the Footrest Tube do not over tighten Item (7). Max torque is 62 inch pounds.

Note: For High Mount Footrest Clamp please refer to the High Mount Footrest Clamp parts manual page.

Note: Prior to 3/16/11 footplates were used w/o item 13D (561112) spacer and utilized smaller footplates. If replacing a footplate on a chair built after 3/16/11 items 1B and 13D should be ordered.

INSET FORMULA:
0" inset: (seat width) = (footrest width)
1" inset: (seat width) - 2"= (footrest width)
2" inset: (seat width) - 4"= (footrest width)

HIGH MOUNT FORMULA:
(footrest width) + 1" = high mount footrest width

FLARED FORMULA:
(seat width) +2" = (footrest width)

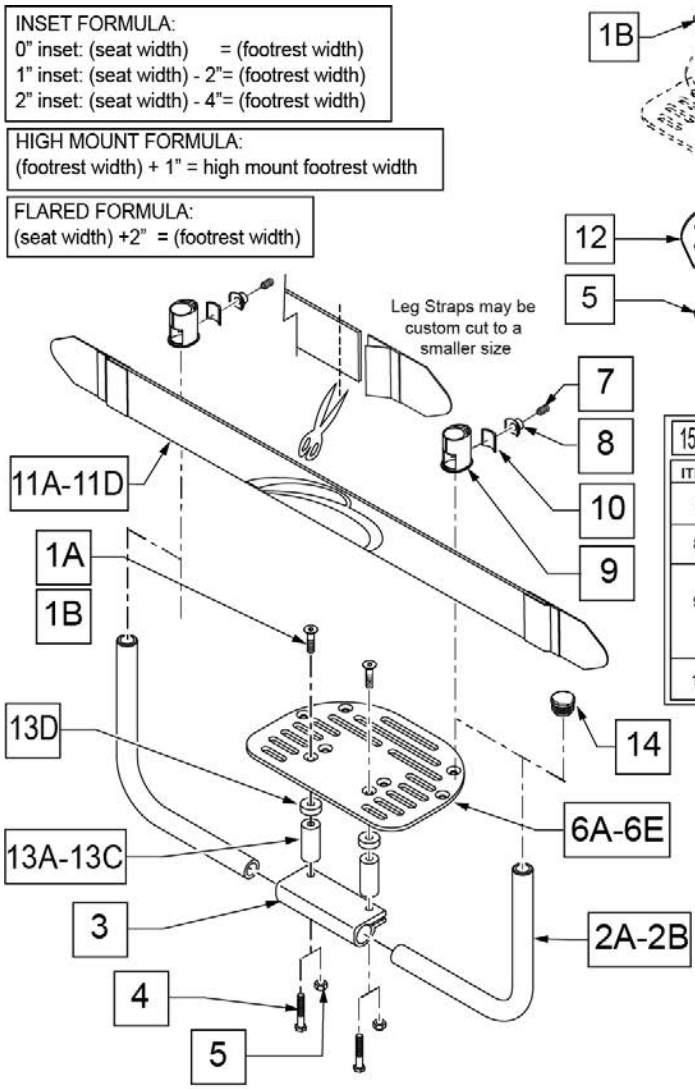

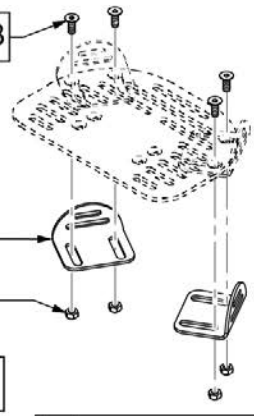

15 FOOTREST MOUNT KIT

ITEM #	ILLUSTRATION	DESCRIPTION	QTY
7		FLT PT SS M8X1.25X8	2
8		FOOTREST NUT	2
9		FOOTREST BUSHING OVAL TO ROUND	2
10		KEY CLAMP, 19MM	2

FOOTREST MEASURING GUIDE

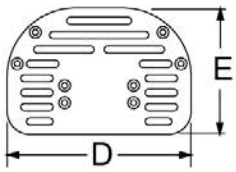

FOOTPLATE P/N	"D"	"E"
500690	6"	5 1/2"
500691	8"	5 1/2"
500692	10"	5 1/2"
500693	12"	5 1/2"

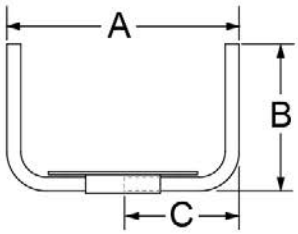

P/N	DESCRIPTION	DIM "A"	DIM "B"	DIM "C"
116228	STD 9-10W	8 3/4" - 9 3/4"	6 5/8"	4 1/8"
111677	STD 11-12W	10 3/4" - 11 3/4"	6 5/8"	5 1/8"
111679	STD 13-14W	12 3/4" - 13 3/4"	6 5/8"	6 1/8"
111681	STD 15-16W	14 3/4" - 15 3/4"	6 5/8"	7 1/8"
111683	STD 17-18W	16 3/4" - 17 3/4"	6 5/8"	8 1/8"
111685	STD 19-20W	18 3/4" - 19 3/4"	6 5/8"	9 1/8"
116229	TALL 9-10W	8 3/4" - 9 3/4"	8 7/8"	4 1/8"
111678	TALL 11-12W	10 3/4" - 11 3/4"	8 7/8"	5 1/8"
111680	TALL13-14W	12 3/4" - 13 3/4"	8 7/8"	6 1/8"
111682	TALL15-16W	14 3/4" - 15 3/4"	8 7/8"	7 1/8"
111684	TALL 17-18W	16 3/4" - 17 3/4"	8 7/8"	8 1/8"
111686	TALL 19-20W	18 3/4" - 19 3/4"	8 7/8"	9 1/8"

Pos.	Item Number	Description	Remarks
1A	102265-003	FHCS M6X1X25 FULL NP	Used w/o Adapter Spacer

Pos.	Item Number	Description	Remarks
1B	103500-009	FHCSM6X1X30FULLNP	Used w/Adapter Spacer; used for chairs after 3/16/11
2A	116228	PLT FRM FTRST TUBE STD 9-10W	
2A	111677	PLTFRM FTRST TUBE STD 11-12W	
2A	111679	PLTFRM FTRST TUBE STD 13-14W	
2A	111681	PLTFRM FTRST TUBE STD 15-16W	
2A	111683	PLTFRM FTRST TUBE STD 17-18W	
2A	111685	PLTFRM FTRST TUBE STD 19-20W	
2B	116229	PLT FRM FTRST TUBE TALL 9-10W	
2B	111678	PLTFRM FTRST TUBE TALL 11-12W	
2B	111680	PLTFRM FTRST TUBE TALL 13-14W	
2B	111682	PLTFRM FTRST TUBE TALL 15-16W	
2B	111684	PLTFRM FTRST TUBE TALL 17-18W	
2B	111686	PLTFRM FTRST TUBE TALL 19-20W	
3	550351	PLATFORM FOOTPLATE CLAMP	
4	102268-001	HHCS M6 x 1 x 25	Used w/Adapter Spacer
5	104381	NUT HEX NYLOCK M6X1.0	Used w/o Adapter Spacer
6A	116225	NEW PATFRORM F/PT 4 X 5 1/2	Used for 9-10 Footrest Width prior to 3/16/11
6B	500690	NEW PLTFORM F/PLT 6X5.5	Used for 10" Footrest Width
6C	500691	NEW PLTFORM F/PLT 8X5.5	Used for 11"-12" Footrest Width
6D	500692	NEW PLTFORM F/PLT 10X5.5	Used for 13"-14" Footrest Width
6E	500693	NEW PLTFORM F/PLT 12X5.5	Used for 15"-20" Footrest Width
7	112339	FLT PT SS M8X1.25X8	
8	112648	FOOTREST NUT	
9	112348	FOOTREST BUSHING OVAL TO ROUND	
10	112651	KEY CLAMP, 19MM	
11A	113255	LEG STRAP 11"-12" BLK	
11B	113256	LEG STRAP 13"-15" BLK	
11C	113257	LEG STRAP 16"-18" BLK	
11D	113258	LEG STRAP 19"-20" BLK	
12	050073	PLATE POSITIONING FOOT	
13A	050075-001	ADAPTIVE FT/RST SPCR 2" P/FRM	
13B	050075-002	ADAPTIVE FT/RST SPCR 4" P/FRM	

Pos.	Item Number	Description	Remarks
13C	050075-003	ADAPTIVE FT/RST SPCR 6" P/FRM	
13D	561112	3/4 OD X .318 ID X .25 NYLON	Used for chairs after 3/16/11
14	561010	3/4" CAP	For use with High Mount Footrest only
15	114934	FTRST MOUNT KIT	
1B,5,12	050228	PLATE POSITIONING FOOT W/HDWR	
1AB,2B,3-5,6B,7-10,11A,13A,13B,13C	116848	ALUM FTRST 9-10W LNG KIT	Includes 2", 4", 6" Adaptive Footrest Spacers & Legrest Strap
1AB,2A,3-5,6B,7-10,11A,13A,13B,13C	116849	ALUM FTRST 9-10W STD KIT	Includes 2", 4", 6" Adaptive Footrest Spacers & Legrest Strap
1AB,2B,3-5,6C,7-10,11A,13A,13B,13C	115015	ALUM FTRST 11-12W LNG KIT	Includes 2", 4", 6" Adaptive Footrest Spacers & Legrest Strap
1AB,2A,3-5,6C,7-10,11A,13A,13B,13C	115016	ALUM FTRST 11-12W STD KIT	Includes 2", 4", 6" Adaptive Footrest Spacers & Legrest Strap
1AB,2B,3-5,6D,7-10,11B,13A,13B,13C	115017	ALUM FTRST 13W LNG KIT	Includes 2", 4", 6" Adaptive Footrest Spacers & Legrest Strap
1AB,2A,3-5,6D,7-10,11B,13A,13B,13C	115018	ALUM FTRST 13W STD KIT	Includes 2", 4", 6" Adaptive Footrest Spacers & Legrest Strap
1AB,2B,3-5,6D,7-10,11B,13A,13B,13C	115019	ALUM FTRST 14W LNG KIT	Includes 2", 4", 6" Adaptive Footrest Spacers & Legrest Strap

Pos.	Item Number	Description	Remarks
1AB,2A,3-5,6D,7-10,11B,13A,13B,13C	115020	ALUM FTRST 14W STD KIT	Includes 2", 4", 6" Adaptive Footrest Spacers & Legrest Strap
1AB,2B,3-5,6E,7-10,11B,13A,13B,13C	115021	ALUM FTRST 15W LNG KIT	Includes 2", 4", 6" Adaptive Footrest Spacers & Legrest Strap
1AB,2A,3-5,6E,7-10,11B,13A,13B,13C	115022	ALUM FTRST 15W STD KIT	Includes 2", 4", 6" Adaptive Footrest Spacers & Legrest Strap
1AB,2B,3-5,6E,7-10,11C,13A,13B,13C	115023	ALUM FTRST 16W LNG KIT	Includes 2", 4", 6" Adaptive Footrest Spacers & Legrest Strap
1AB,2A,3-5,6E,7-10,11C,13A,13B,13C	115024	ALUM FTRST 16W STD KIT	Includes 2", 4", 6" Adaptive Footrest Spacers & Legrest Strap
1AB,2B,3-5,6E,7-10,11C,13A,13B,13C	115025	ALUM FTRST 17W LNG KIT	Includes 2", 4", 6" Adaptive Footrest Spacers & Legrest Strap
1AB,2A,3-5,6E,7-10,11C,13A,13B,13C	115026	ALUM FTRST 17W STD KIT	Includes 2", 4", 6" Adaptive Footrest Spacers & Legrest Strap
1AB,2B,3-5,6E,7-10,11C,13A,13B,13C	115027	ALUM FTRST 18W LNG KIT	Includes 2", 4", 6" Adaptive Footrest Spacers & Legrest Strap
1AB,2A,3-5,6E,7-10,11C,13A,13B,13C	115028	ALUM FTRST 18W STD KIT	Includes 2", 4", 6" Adaptive Footrest Spacers & Legrest Strap

Pos.	Item Number	Description	Remarks
1AB,2B,3-5,6E,7-10,11D,13A,13B,13C	115029	ALUM FTRST 19-20W LNG KIT	Includes 2", 4", 6" Adaptive Footrest Spacers & Legrest Strap
1AB,2A,3-5,6E,7-10,11D,13A,13B,13C	115030	ALUM FTRST 19-20W STD KIT	Includes 2", 4", 6" Adaptive Footrest Spacers & Legrest Strap

Note: For High Mount Footrest Clamp part numbers please refer to the High Mount Footrest Clamp parts manual page.

Note: In order to prevent deformation of the Footrest Tube do not over tighten Item 11. Max torque is 62 inch pounds.

Note: For Q7 this option is not offered on 19" & 20" footrest widths.

Note: if adding Adaptive Spacers, order complete kit and spacers from the ADAPTIVE FLIP-BACK FOOTREST parts page.

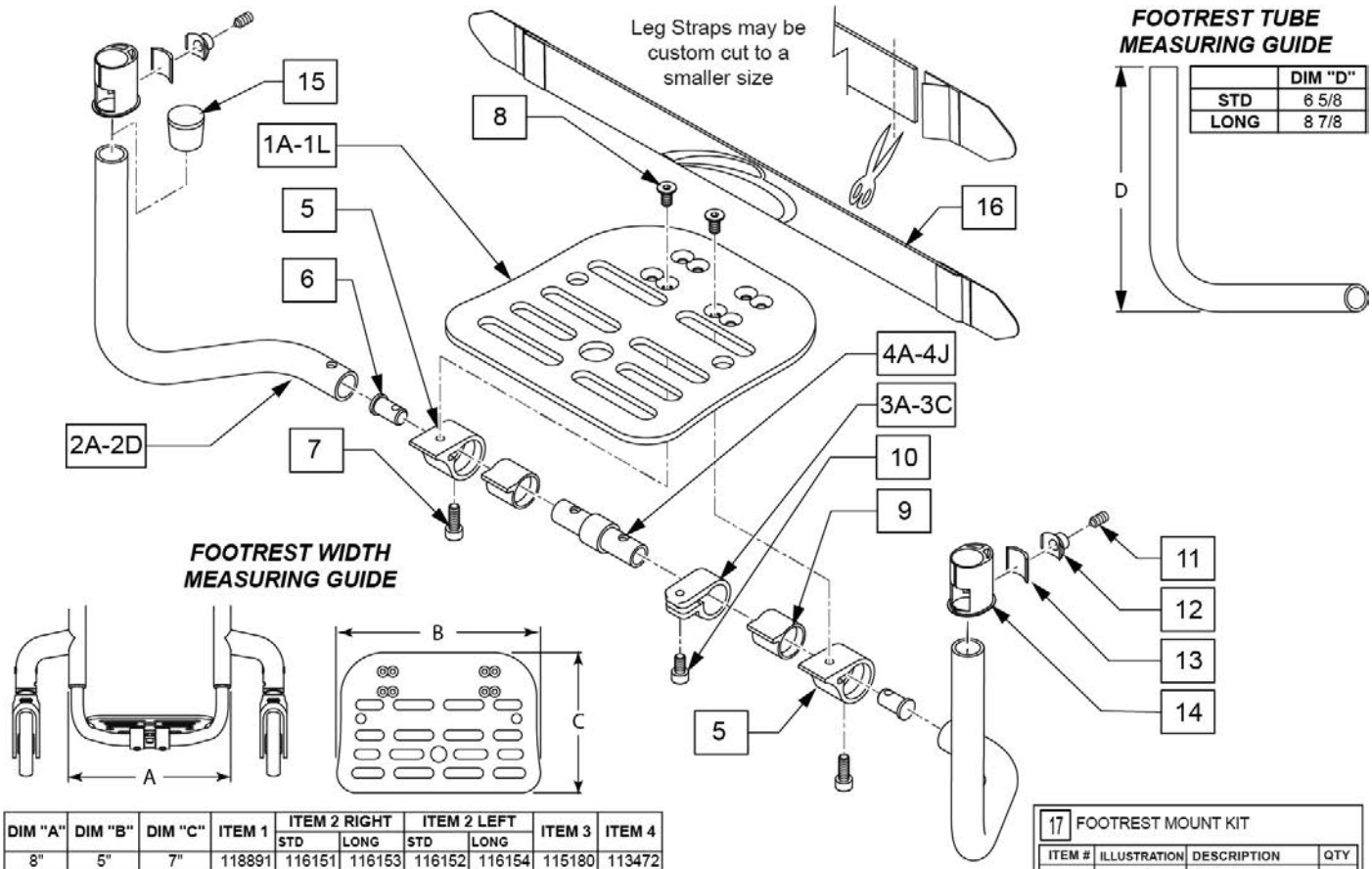

DIM "A"	DIM "B"	DIM "C"	ITEM 1	ITEM 2 RIGHT		ITEM 2 LEFT		ITEM 3	ITEM 4
				STD	LONG	STD	LONG		
8"	5"	7"	118891	116151	116153	116152	116154	115180	113472
9"	6"	7"	118892	116151	116153	116152	116154	115180	113473
10"	7"	7"	118893	116148	116150	116147	116149	115180	113474
11"	8"	7"	118894	116148	116150	116147	116149	115182	113475
12"	9"	7"	118895	116148	116150	116147	116149	115182	113476
13"	10"	7"	118896	116148	116150	116147	116149	115182	113477
14"	11"	7"	118897	116148	116150	116147	116149	115183	113478
15"	12"	7"	118898	116148	116150	116147	116149	115183	113479
16"	13"	7"	118899	116148	116150	116147	116149	115183	113480
17"	14"	7"	118900	116148	116150	116147	116149	115183	113481
18"	15"	7"	118901	116148	116150	116147	116149	115183	113482

FLARED FORMULA:
(seat width) +2" = (footrest width)

INSET FORMULA:
0" inset: (seat width) = (footrest width)
1" inset: (seat width) - 2"= (footrest width)
2" inset: (seat width) - 4"= (footrest width)

17 FOOTREST MOUNT KIT

ITEM #	ILLUSTRATION	DESCRIPTION	QTY
1		FLT PT SS M8X1.25X8	2
2		FOOTREST NUT	2
3		FOOTREST BUSHING OVAL TO ROUND	2
4		KEY CLAMP, 19MM	2

Pos.	Item Number	Description	Remarks
1A	118891	FOOTPLATE 8-9 PED	
1B	118892	FOOTPLATE 9-10 PED	

Pos.	Item Number	Description	Remarks
1C	118893	FOOTPLATE 10-11 PED	
1D	118894	FOOTPLATE 11-12 PED	
1E	118895	FOOTPLATE 12-13 PED	
1F	118896	FOOTPLATE 13-14 PED	
1G	118897	FOOTPLATE 14-15 PED	
1H	118898	FOOTPLATE 15-16 PED	
1J	118899	FOOTPLATE 16-17 PED	
1K	118900	FOOTPLATE 17-18 PED	
1L	118901	FOOTPLATE 18-19 PED	
2A	116147	FB TUBE LH STD	Left-Used w/ 10"-18" wide Footrest
2A	116148	FB TUBE RH STD	Right-Used w/ 10"-18" wide Footrest
2B	116149	FB TUBE LH LNG	Left-Used w/ 10"-18" wide Footrest
2B	116150	FB TUBE RH LNG	Right-Used w/ 10"-18" wide Footrest
2C	116151	FB TUBE RH STD 8-9	Right-Used w/ 8"-9" wide Footrest
2C	116152	FB TUBE LH STD 8-9	Left-Used w/ 8"-9" wide Footrest
2D	116153	FB TUBE RH LNG 8-9	Right-Used w/ 8"-9" wide Footrest
2D	116154	FB TUBE LH LNG 8-9	Left-Used w/ 8"-9" wide Footrest
3A	115180	FB FOOT ANGLE ADJ 8-9	
3B	115182	FB FOOT ANGLE ADJ 10-14	
3C	115183	FB FOOT ANGLE ADJ 15-18	
4A	113472	FLIP BACK CENTER TUBE 10"	Fits: 8"&10"
4B	113473	FLIP BACK CENTER TUBE 11"	Fits: 9"&11"
4C	113474	FLIP BACK CENTER TUBE 12"	Fits: 12"
4D	113475	FLIP BACK CENTER TUBE 13"	Fits: 13"
4E	113476	FLIP BACK CENTER TUBE 14"	Fits: 14"
4F	113477	FLIP BACK CENTER TUBE 15"	Fits: 15"
4G	113478	FLIP BACK CENTER TUBE 16"	Fits: 16"
4H	113479	FLIP BACK CENTER TUBE 17"	Fits: 17"
4J	113480	FLIP BACK CENTER TUBE 18"	Fits: 18"
5	115181	FB FOOTPLATE RECEIVER	
6	113449	FLIP BACK INSERT	
7	104522	SHCS M6X1X16 FULL PL	
8	103500-004	FHCSM6X1X12FULLNP	
9	115774	FLIP BACK FOOTREST BUSHING	
10	103132	SHCS M6X1X10 FULL PL	
11	112339	FLT PT SS M8X1.25X8	
12	112648	FOOTREST NUT	
13	112651	KEY CLAMP, 19MM	
14	112348	FOOTREST BUSHING OVAL TO ROUND	
15	561010	3/4" CAP	Use on High Mount Footrest only
16	113255	LEG STRAP 11"-12" BLK	
16	113256	LEG STRAP 13"-15" BLK	
16	113257	LEG STRAP 16"-18" BLK	
16	113258	LEG STRAP 19"-20" BLK	
17	114934	FTRST MOUNT KIT	
1A,2C,3A,4A,5-16	120238	F/BCK F/RST STD ASSM 8	Fits: 8"
1B,2C,3A,4B,5-16	120239	F/BCK F/RST STD ASSM 9	Fits: 9"
1C,2A,3B,4A,5-16	120240	F/BCK F/RST STD ASSM 10	Fits: 10"
1D,2A,3B,4B,5-16	120241	F/BCK F/RST STD ASSM 11	Fits: 11"
1E,2A,3B,4C,5-16	120242	F/BCK F/RST STD ASSM 12	Fits: 12"
1F,2A,3B,4D,5-16	120243	F/BCK F/RST STD ASSM 13	Fits: 13"
1G,2A,3B,4E,5-16	120244	F/BCK F/RST STD ASSM 14	Fits: 14"
1H,2A,3C,4F,5-16	120245	F/BCK F/RST STD ASSM 15	Fits: 15"
1J,2A,3C,4G,5-16	120246	F/BCK F/RST STD ASSM 16	Fits: 16"
1K,2A,3C,4H,5-16	120247	F/BCK F/RST STD ASSM 17	Fits: 17"
1L,2A,3C,4J,5-16	120248	F/BCK F/RST STD ASSM 18	Fits: 18"
1A,2D,3A,4A,5-16	120249	F/BCK F/RST LNG ASSM 8	Fits: 8"

Pos.	Item Number	Description	Remarks
1B,2D,3A,4B,5-16	120250	F/BCK F/RST LNG ASSM 9	Fits: 9"
1C,2B,3B,4A,5-16	120251	F/BCK F/RST LNG ASSM 10	Fits: 10"
1D,2B,3B,4B,5-16	120252	F/BCK F/RST LNG ASSM 11	Fits: 11"
1E,2B,3B,4C,5-16	120253	F/BCK F/RST LNG ASSM 12	Fits: 12"
1F,2B,3B,4D,5-16	120254	F/BCK F/RST LNG ASSM 13	Fits: 13"
1G,2B,3B,4E,5-16	120255	F/BCK F/RST LNG ASSM 14	Fits: 14"
1H,2B,3C,4F,5-16	120256	F/BCK F/RST LNG ASSM 15	Fits: 15"
1J,2B,3C,4G,5-16	120257	F/BCK F/RST LNG ASSM 16	Fits: 16"
1K,2B,3C,4H,5-16	120258	F/BCK F/RST LNG ASSM 17	Fits: 17"
1L,2B,3C,4J,5-16	120259	F/BCK F/RST LNG ASSM 18	Fits: 18"

HIGH MOUNT FOOTREST CLAMP

Note: For footrest part numbers please refer to the Flip-Back Footrest parts manual page.

Note: See information panel for Instruction Sheet.

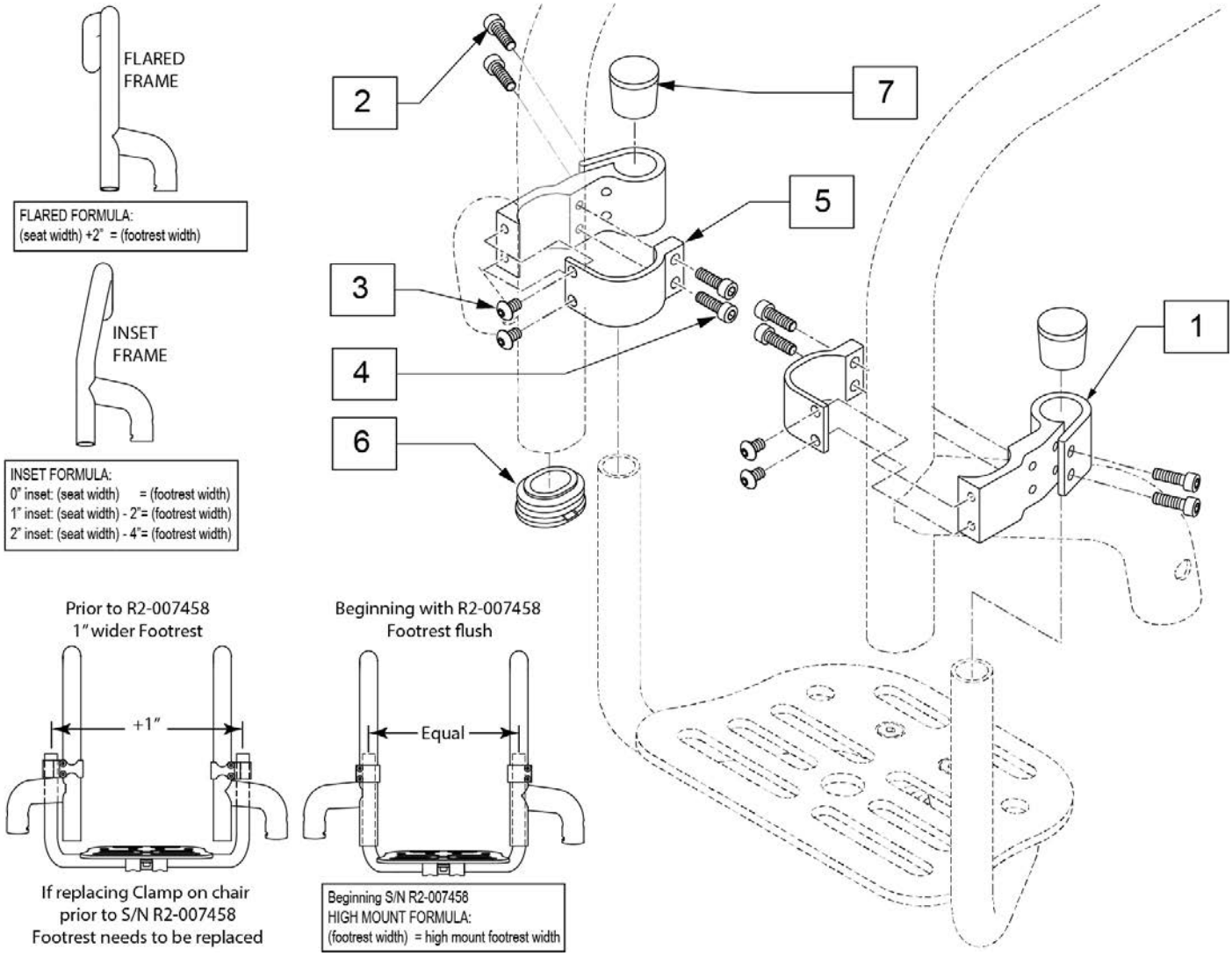

Pos.	Item Number	Description	Remarks
2	103181	SHCS M5 X .8 X 14 W/PL	
3	103184-002	BHCS,M5X0.8X8,FULL,PL	
4	113317	SHCS M5X0.8X25 FULL PL	
6	110161	FRAME INSERT, REAR SEAT TUBE	
7	561010	3/4" CAP	
1-7	123463	HIGH MOUNT FOOTREST KIT	Pair

Note: In order to prevent deformation of the Footrest Tube do not over tighten Item 21. Max torque is 62 inch pounds.

Note: if removing the Adaptive Spacers, order complete kit from the FLIP-BACK FOOTREST parts page.

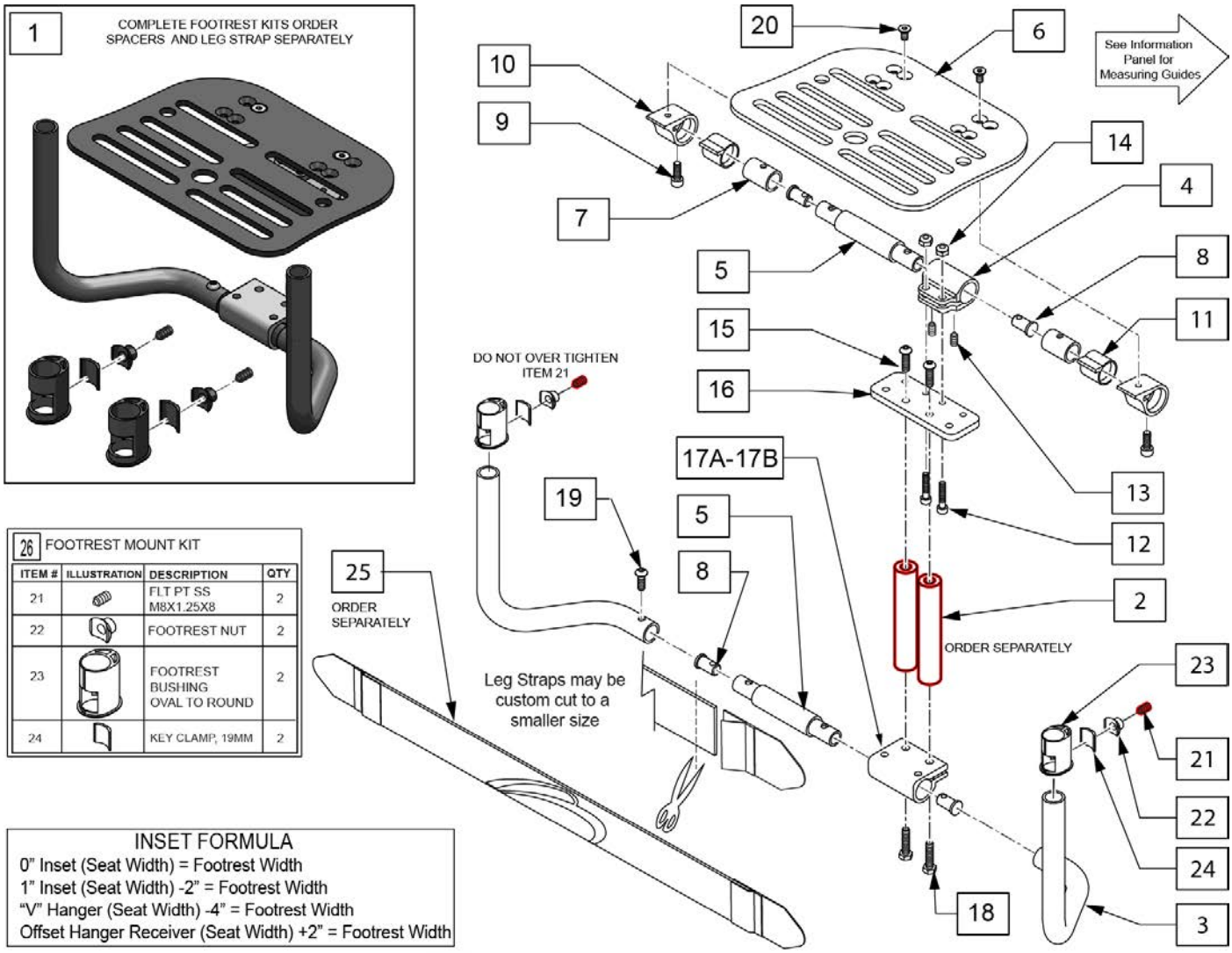

Pos.	Item Number	Description	Remarks
1	145100	F/BCK FTRST ADP STD ASSM 8	Fits: 8"
1	145101	F/BCK FTRST ADP STD ASSM 9	Fits: 9"
1	145102	F/BCK FTRST ADP STD ASSM 10	Fits: 10"
1	145103	F/BCK FTRST ADP STD ASSM 11	Fits: 11"
1	145104	F/BCK FTRST ADP STD ASSM 12	Fits: 12"
1	145105	F/BCK FTRST ADP STD ASSM 13	Fits: 13"
1	145106	F/BCK FTRST ADP STD ASSM 14	Fits: 14"
1	145107	F/BCK FTRST ADP STD ASSM 15	Fits: 15"
1	145108	F/BCK FTRST ADP STD ASSM 16	Fits: 16"
1	145109	F/BCK FTRST ADP STD ASSM 17	Fits: 17"

Pos.	Item Number	Description	Remarks
1	145110	F/BCK FTRST ADP STD ASSM 18	Fits: 18"
1	145111	F/BCK FTRST ADP LNG ASSM 8	Fits: 8"
1	145112	F/BCK FTRST ADP LNG ASSM 9	Fits: 9"
1	145113	F/BCK FTRST ADP LNG ASSM 10	Fits: 10"
1	145114	F/BCK FTRST ADP LNG ASSM 11	Fits: 11"
1	145115	F/BCK FTRST ADP LNG ASSM 12	Fits: 12"
1	145116	F/BCK FTRST ADP LNG ASSM 13	Fits: 13"
1	145117	F/BCK FTRST ADP LNG ASSM 14	Fits: 14"
1	145118	F/BCK FTRST ADP LNG ASSM 15	Fits: 15"
1	145119	F/BCK FTRST ADP LNG ASSM 16	Fits: 16"
1	145120	F/BCK FTRST ADP LNG ASSM 17	Fits: 17"
1	145121	F/BCK FTRST ADP LNG ASSM 18	Fits: 18"
2	050075-001	ADAPTIVE FT/RST SPCR 2" P/FRM	
2	050075-002	ADAPTIVE FT/RST SPCR 4" P/FRM	
2	050075-003	ADAPTIVE FT/RST SPCR 6" P/FRM	
3A	116147	FB TUBE LH STD	Left-Used w/ 10"-18" wide Footrest
3A	116148	FB TUBE RH STD	Right-Used w/ 10"-18" wide Footrest
3B	116149	FB TUBE LH LNG	Left-Used w/ 10"-18" wide Footrest
3B	116150	FB TUBE RH LNG	Right-Used w/ 10"-18" wide Footrest
3C	116151	FB TUBE RH STD 8-9	Right-Used w/ 8"-9" wide Footrest
3C	116152	FB TUBE LH STD 8-9	Left-Used w/ 8"-9" wide Footrest
3D	116153	FB TUBE RH LNG 8-9	Right-Used w/ 8"-9" wide Footrest
3D	116154	FB TUBE LH LNG 8-9	Left-Used w/ 8"-9" wide Footrest
4A	128880	FB FOOT ANGLE ADJ 8-12	
4B	128881	FB FOOT ANGLE ADJ 13-18	
5A	113472	FLIP BACK CENTER TUBE 10"	Fits: 8"&10"
5B	113473	FLIP BACK CENTER TUBE 11"	Fits: 9"&11"
5C	113474	FLIP BACK CENTER TUBE 12"	Fits: 12"
5D	113475	FLIP BACK CENTER TUBE 13"	Fits: 13"
5E	113476	FLIP BACK CENTER TUBE 14"	Fits: 14"
5F	113477	FLIP BACK CENTER TUBE 15"	Fits: 15"
5G	113478	FLIP BACK CENTER TUBE 16"	Fits: 16"
5H	113479	FLIP BACK CENTER TUBE 17"	Fits: 17"
5I	113480	FLIP BACK CENTER TUBE 18"	Fits: 18"
6	118891	FOOTPLATE 8-9 PED	
6	118892	FOOTPLATE 9-10 PED	
6	118893	FOOTPLATE 10-11 PED	
6	118894	FOOTPLATE 11-12 PED	
6	118895	FOOTPLATE 12-13 PED	
6	118896	FOOTPLATE 13-14 PED	
6	118897	FOOTPLATE 14-15 PED	
6	118898	FOOTPLATE 15-16 PED	
6	118899	FOOTPLATE 16-17 PED	
6	118900	FOOTPLATE 17-18 PED	
6	118901	FOOTPLATE 18-19 PED	
7	128884	FB PIVOT TUBE	
8	113449	FLIP BACK INSERT	
9	104522	SHCS M6X1X16 FULL PL	
10	115181	FB FOOTPLATE RECEIVER	
11	115774	FLIP BACK FOOTREST BUSHING	
12	102260-002	SHCS,M5 X .8 X 25,FULL,NP	
13	061615	SET SCREW M5 X 6	
14	220121	NUT HEX NYLOCK M5 BLACK	
15	058901-001	BHCS,M6X1X20,FULL,PL	
16	128883	FB FOOTPLATE TO SPACER PLATE	
17A	128882	PLATFORM FOOTPLATE	Fits: 8"-12"
17B	550351	CLAMP, FOOTPLATE	Fits: 13"-18"

Pos.	Item Number	Description	Remarks
18	102268-001	HHCS M6 X 1 X 25 BLK	
19	112346	BHCS,M6X1X16,FULL,PL	
20	103500-004	FHCSM6X1X12FULLNP	
21	112339	FLT PT SS M8X1.25X8	
22	112648	FOOTREST NUT	
23	112651	KEY CLAMP, 19MM	
24	112348	FOOTREST BUSHING OVAL TO ROUND	
25	113255	LEG STRAP 11"-12" BLK	
25	113256	LEG STRAP 13"-15" BLK	
25	113257	LEG STRAP 16"-18" BLK	
25	113258	LEG STRAP 19"-20" BLK	
26	114934	FTRST MOUNT KIT	

PADDED SWING-AWAY ARMREST

Note: If replacing item 3 for chairs built prior to s/n RZ-007247 (Zone) or R4-019239 (Q7) replace both sides.

Part Changes, please see notes/remarks for important information

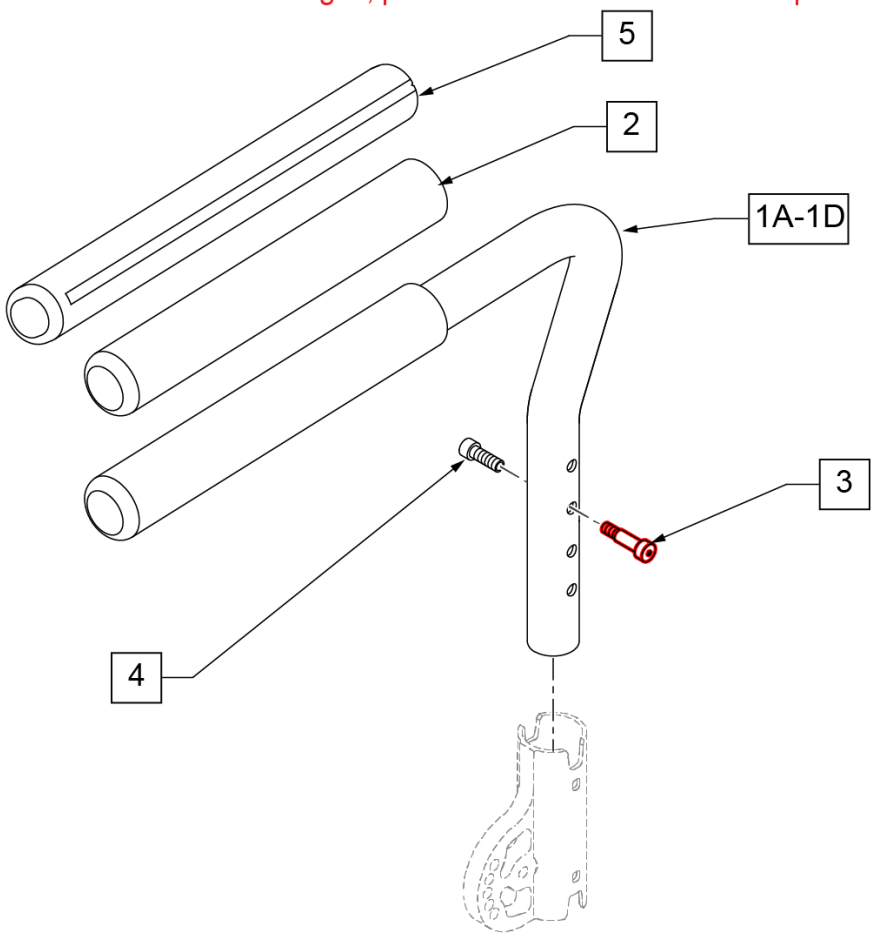

Measuring Guide

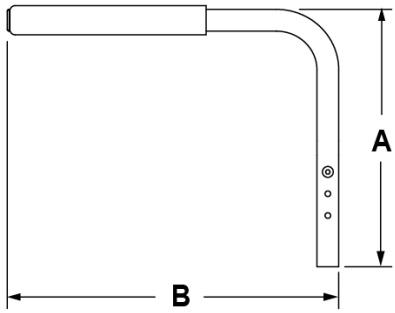

	DIM "A"	DIM "B"
PED	10 1/4	15 1/4
PED LONG	10 1/4	19 1/4
STD	15 1/2	15 1/4
STD LONG	15 1/2	19 1/4

6 SEXBOLT SA ARMREST KIT

ITEM #	ILLUSTRATION	DESCRIPTION	QTY
3		SEX BOLT MALE, SA	2
4		SEX BOLT FEMALE, SA ARMREST	2

Pos.	Item Number	Description	Remarks
1D,2	121123	ASSY PAD ARM STD LONG LH	LEFT - Std long - for Zone only-bolts sold separately
1D,2	121124	ASSY PAD ARM STD LONG RH	RIGHT - Std long - for Zone only-bolts sold separately
1A-4	116850	PAD S/A PED W/ BOLT ASSM L	LEFT - Ped
1A-4	116851	PAD S/A PED W/ BOLT ASSM R	RIGHT - Ped
1B-4	115040	PADDED S/A WITH BOLT ASSM L	LEFT - Std
1B-4	115041	PADDED S/A WITH BOLT ASSM R	RIGHT - Std
1C-4	120895	PAD S/A PED LNG W/BOLT L	LEFT - Ped long
1C-4	120894	PAD S/A PED LNG W/BOLT R	RIGHT - Ped long
2	920070	9X.940X.200 FOAM GRIP	1 grip
5	108315	GEL PAD S/A ARM	PAIR
6	108118	SEXBOLTSA ARMREST KIT	PAIR

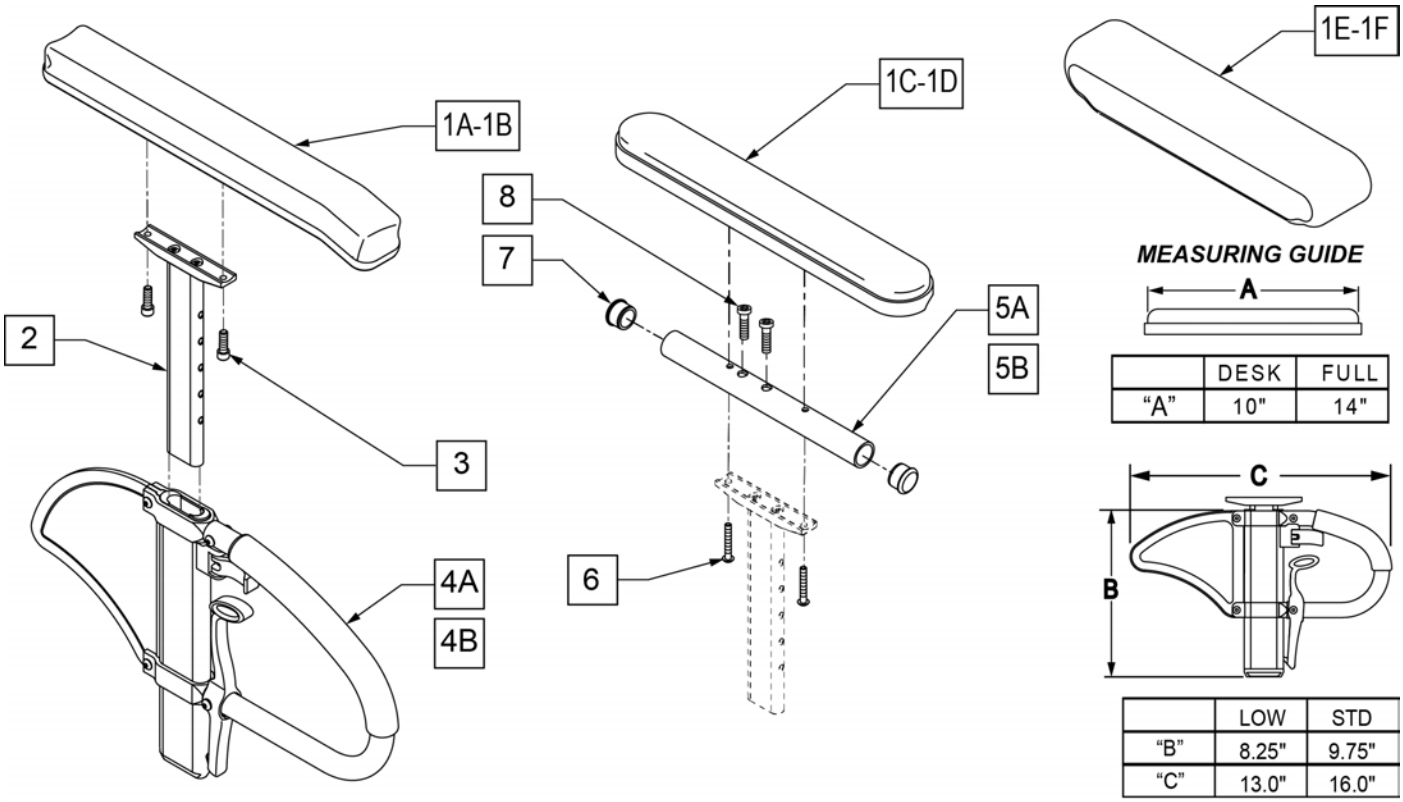

Pos.	Item Number	Description	Remarks
1A	104568-001	SPHA PAD DESK	CONTOUR DESK
1B	104568-002	SPHA PAD FULL	CONTOUR FULL
1C	561024	ARMREST PAD 10" DESK	CLASSIC DESK
1D	561031	ARMREST PAD 14" FULL	CLASSIC FULL
1E	561280	ARMREST PAD 10" LEFT W/F	Left-Waterfall Desk
1E	561281	ARMREST PAD 10" RIGHT W/F	Rightt-Waterfall Desk
1F	561284	ARMREST PAD 14" LEFT W/F	Leftt-Waterfall Full
1F	561285	ARMREST PAD 14" RIGHT W/F	Rightt-Waterfall Full
2	116312	SNGL POST UPPR ASSM LOW	LOW/SMALL
2	116313	SNGL POST UPPR ASSM STD	STANDARD
3	106956	SHCS 10-32 X 3/4 ROHS	
2,4A	104509-001	SPHA ARMREST ASSY STD	STANDARD
2,4B	104509-002	SPHA ARMREST ASSY LOW	LOW/SMALL
5A	521812	HT ADJ PD TUBE 10IN DESK POWE	Desk
5B	521813	HT ADJ PD TUBE 14IN FULL POWE	Full
6	107024	BHCS 10-32 X 1 1/2 ROHS	
7	560735	7/8" ROUND TUBE PLUG	
8	108534	SHCS 10-32 X 1-1/4 PL	Used with Full Length & Waterfall
1C,2,3,4A,5A,6,7	108599	SPHA STD CLASIC DESK PAD R	Right
1C,2,3,4A,5A,6,7	108603	SPHA STD CLASIC DESK PAD L	Left
1D,2,3,4A,5B,6-8	108601	SPHA STD CLASIC FULL PAD R	Right
1D,2,3,4A,5B,6-8	108605	SPHA STD CLASIC FULL PAD L	Left
1A,2,3,4A	108595	SPHA STD CNTUR DESK PAD	
1B,2,3,4A	108597	SPHA STD CNTUR FULL PAD	
1C,2,3,4B,5A,6,7	108600	SPHA LOW CLASIC DESK PAD R	Right
1C,2,3,4B,5A,6,7	108604	SPHA LOW CLASIC DESK PAD L	Left
1D,2,3,4B,5B,6-8	108602	SPHA LOW CLASIC FULL PAD R	Right

Pos.	Item Number	Description	Remarks
1D,2,3,4B,5B,6-8	108606	SPHA LOW CLASIC FULL PAD L	Left
1A,2,3,4B	108596	SPHA LOW CNTUR DESK PAD	
1B,2,3,4B	108598	SPHA LOW CNTUR FULL PAD	
1C,2,5A,6,7	159600	SPHA STD CLAS DESK UPPR R	Right
1C,2,5A,6,7	159601	SPHA STD CLAS DESK UPPR L	Left
1D,2,5B,6-8	159602	SPHA STD CLAS FULL UPPR R	Right
1D,2,5B,6-8	159603	SPHA STD CLAS FULL UPPR L	Left
1C,2,5A,6,7	159604	SPHA LOW CLAS DESK UPPR R	Right
1C,2,5A,6,7	159605	SPHA LOW CLAS DESK UPPR L	Left
1D,2,5B,6-8	159606	SPHA LOW CLAS FULL UPPR R	Right
1D,2,5B,6-8	159607	SPHA LOW CLAS FULL UPPR L	Left
1E,2,4B,5A,6,7	164089	SPHA LOW W/F DESK PAD R	Right
1E,2,4B,5A,6,8	164090	SPHA LOW W/F DESK PAD L	Left
1F,2,4B,5B,6,8	164091	SPHA LOW W/F FULL PAD R	Right
1F,2,4B,5B,6,8	164092	SPHA LOW W/F FULL PAD L	Left
1E,2,4A,5A,6,7	164093	SPHA STD W/F DESK PAD R	Right
1E,2,4A,5A,6,8	164094	SPHA STD W/F DESK PAD L	Left
1F,2,4A,5B,6,8	164095	SPHA STD W/F FULL PAD R	Right
1F,2,4A,5B,6,8	164096	SPHA STD W/F FULL PAD L	Left

Note: Fits most Manual Products, not all Armrest Pads are offered on all chairs, consult product order form for compatibility.

Note: available on Quickie Iris after S/N IRS-007726 & IRSE-008701 and prior to IRS-063000 & IRSE-083000, and Zippie Iris prior to ZRS-051000 & ZRSE-058000.

Note: if switching from Desk to Full Length Armrest Pad OR switching from Full Length to Desk Armrest Pad, the following items are required: 1C/1D, 5A/5B, and 6-8.

KIDS T POST ARMREST

[12/2011]

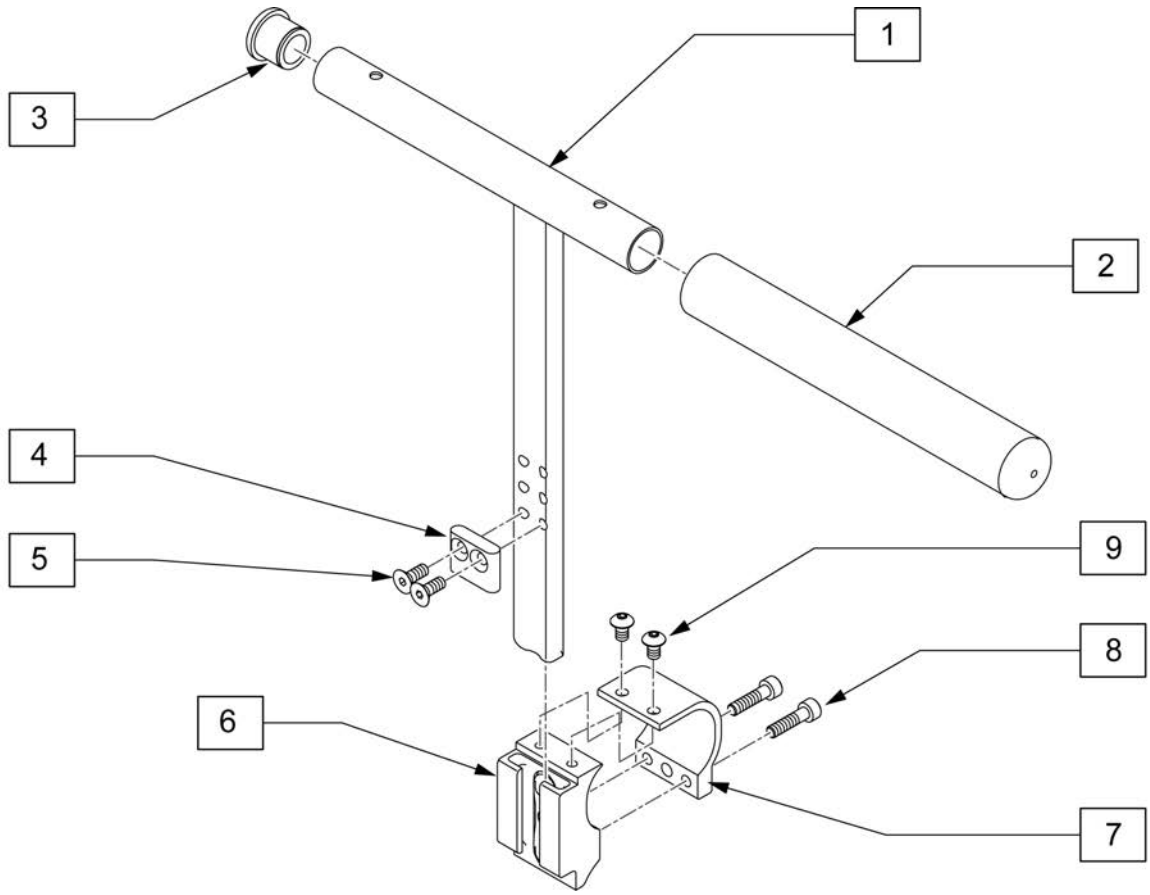

Pos.	Item Number	Description	Remarks
1	119867	KIDZ T-POST ARM XTALL WLDMNT	
1	119868	KIDZ T-POST ARM 2XTALL WLDMNT	
2	560309	ARMREST FOAM KIDZ	
3	561007	7/8 INSERT PLUG .083	
4	550105-QU	KIDZ ARM STOP	
5	226012	10-32 X 1/2 FH C/S BLK	
6	111695	ASSY PLASTIC SIDE GUARD REC	
7	112695	PLASTIC SIDE GUARD INNER CLAMP	
8	112697	SHCS M5 X .8 X 20 FULL PL	
9	103184-002	BHCS M5 X .8 X8 FULL PL	
1-5	119869	T-POST ARM XTALL W/FOAM R	Right
1-5	119870	T-POST ARM XTALL W/FOAM L	Left
1-5	119871	T-POST ARM 2XTALL W/FOAM R	Right
1-5	119872	T-POST ARM 2XTALL W/FOAM L	Left
6-9	115046	PLST SDE GRD REC ASSM	T-Post reciever, 1 side

PADDED SWING-AWAY ARMREST RECEIVER

Part Changes, please see notes/remarks for important information

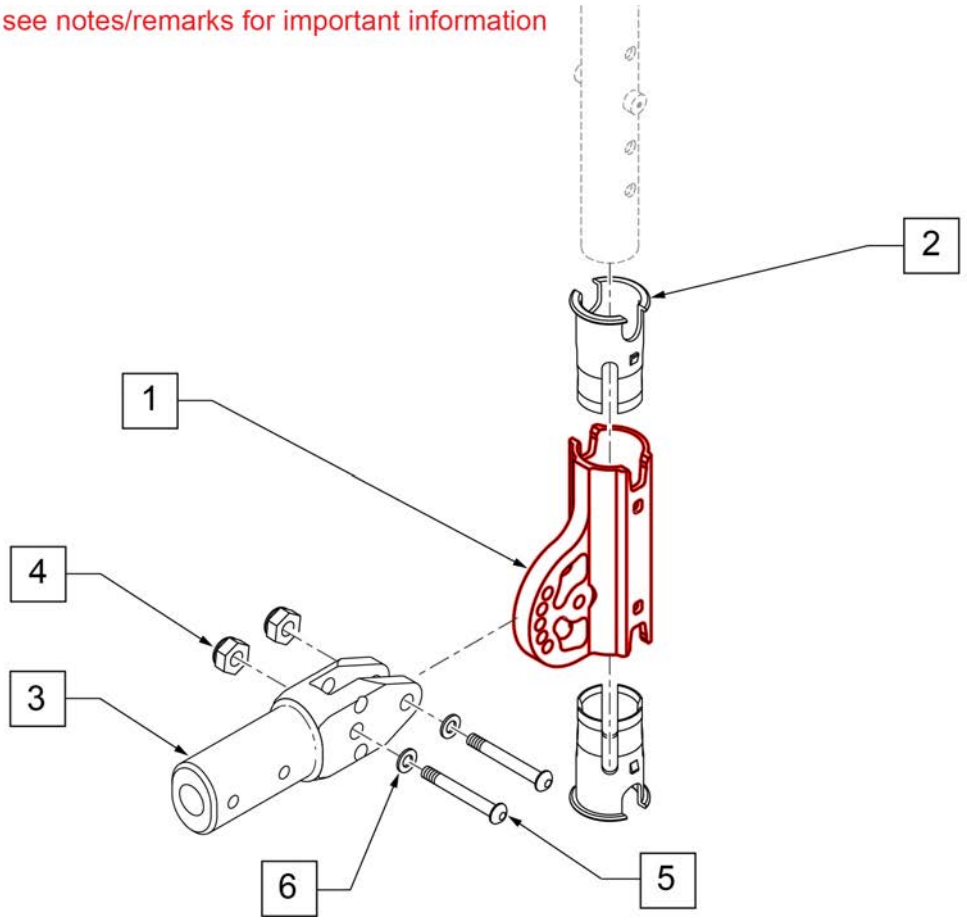

Pos.	Item Number	Description
1,2	117838	RECEIVER MNT W/ SLEEVE
2	106505	SLEEVE SWING AWAY ARMREST
3	115169	ARM PADDED TUBLAR MT PED
4	104381	NUT HEX NYLOCK M6 x 1.0
5	102262-005	BHCS M6 x 1 x 30 INORG
6	250104	WASHER FLAT M6
1-6	117839	PADDED S/A REC MNT ASSM

Note: If replacing item 1 for chairs built prior to s/n RZ-007247 replace both sides.

NOTE: CLAMP MOUNTS TO OVALIZED TUBING ONLY.

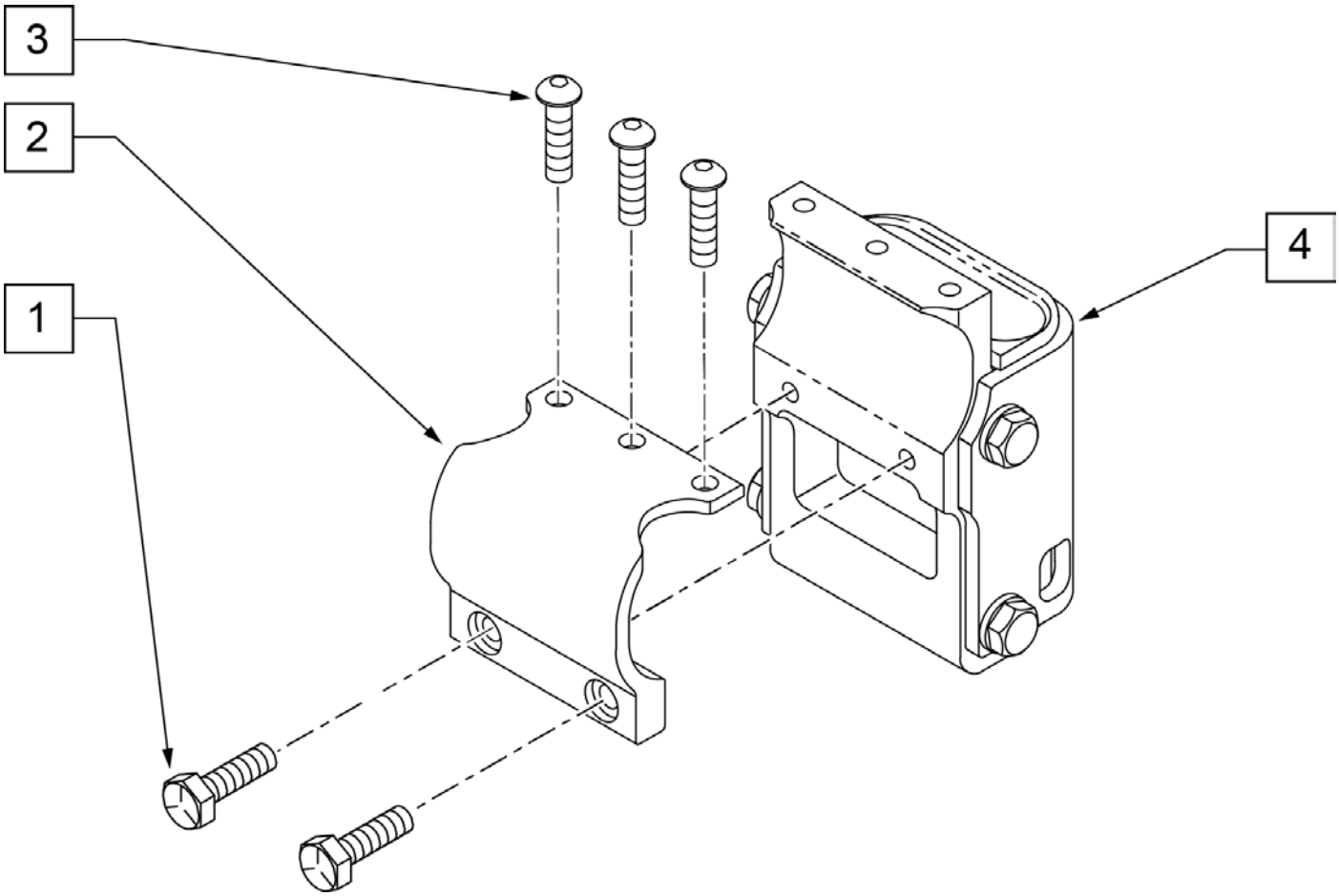

Pos.	Item Number	Description
1	113317	HHCS M5 x 1 x 25 INORG
2	112694	SPHA INNER CLAMP
3	103184-002	BHCS M5 x 0.8 x 8 FULL PL
4	111691	SPHA RECEIVER ASSY
1-4	115031	SPHA RECEIVER ASSM

GEL PAD FOR PADDED SWING-AWAY ARMREST

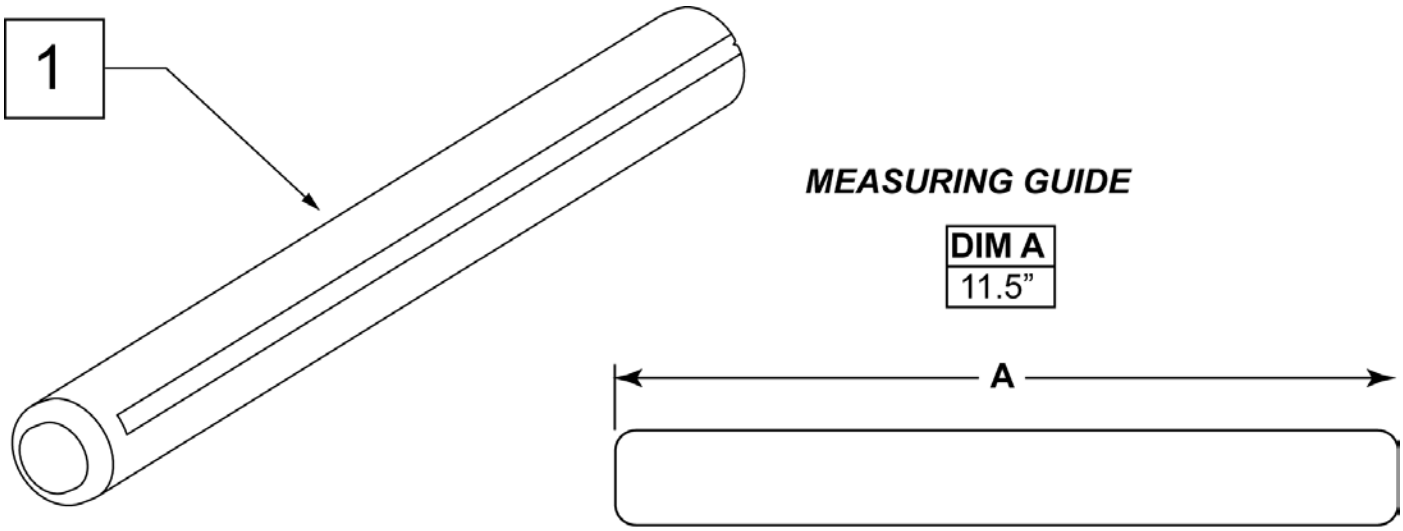

Pos.	Item Number	Description	Remarks
1	108315	GEL PAD S/ ARM	Pair

QUICKIE SIDE POCKET

(06/23/2018)

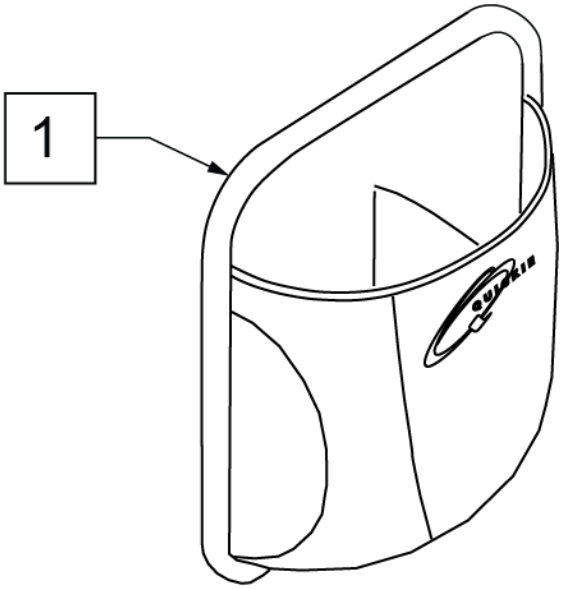

Pos.	Item Number	Description	Remarks
1	013475	QUICKIE SIDE POCKET	Size: 6.5"x 6.5"x 2"

CELL PHONE PACK

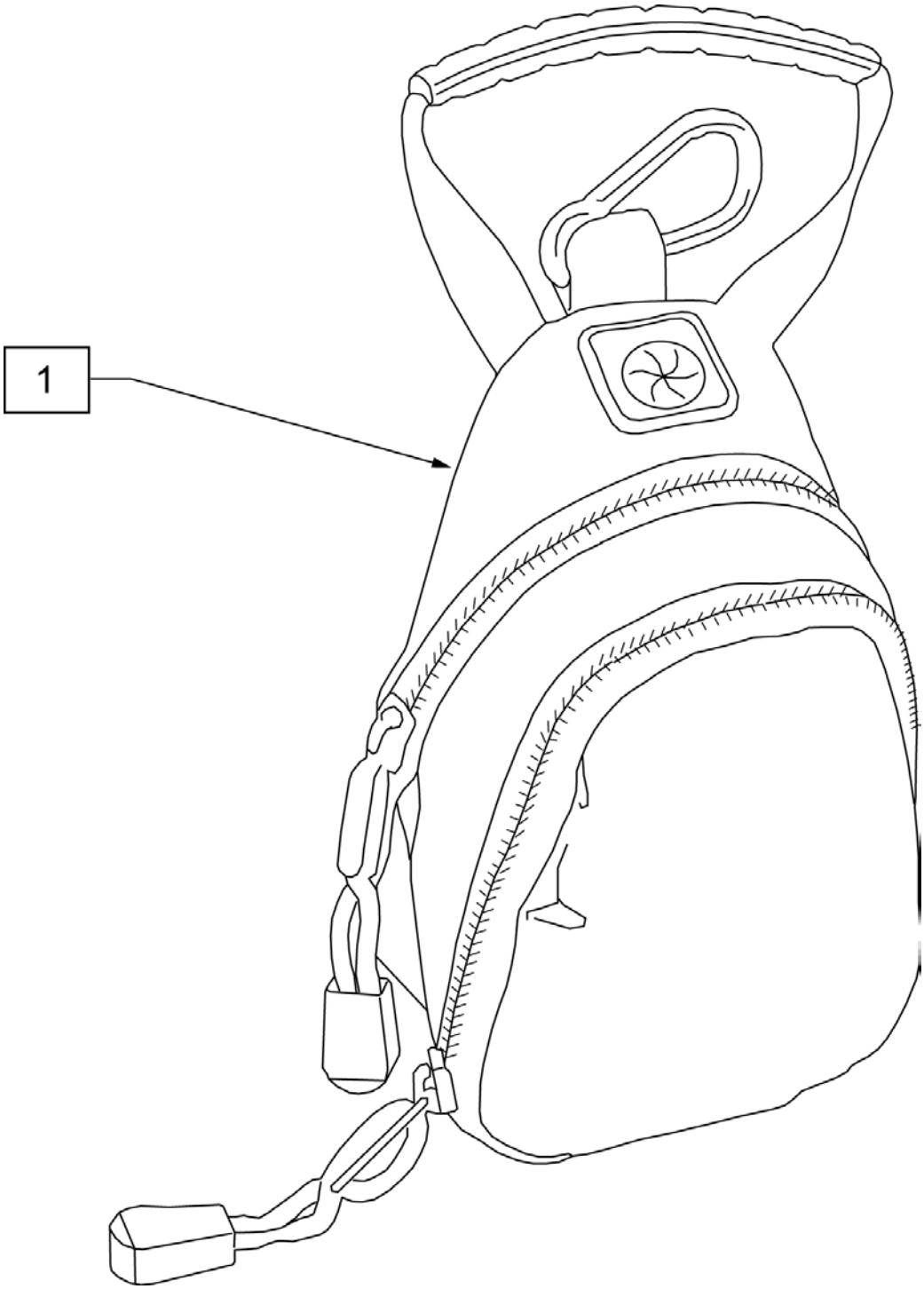

Pos.	Item Number	Description
1	109229	CELL PHONE PACK (ORANGE)

NOTE: KIDS BACKPACKS DO NOT HAVE ADJUSTABLE STRAPS W/ BUCKLES.

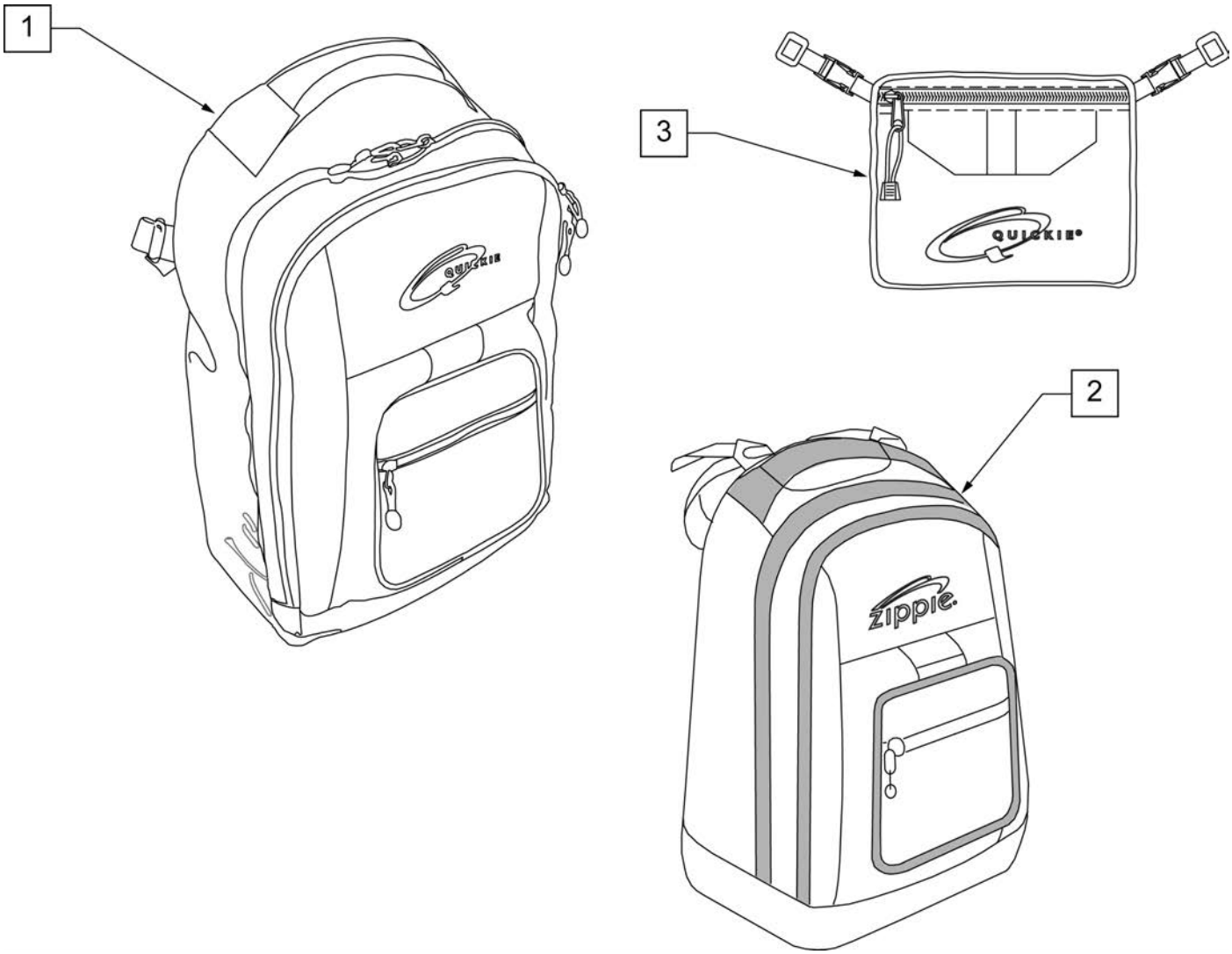

Pos.	Item Number	Description	Remarks
1	750115	BACK PACK QUICKIE	Overall dimensions:width 12.5", height 18.5", depth 6.5"
2	104572	BACKPACK ZIPPIE	Overall dimensions: width 12", height 16.5", depth 4.5"
3	750307	SEAT POUCH QUICKIE	Dimensions: width 8.5", height 6", depth top 2.5", depth bottom 3.5"

AIRCRAFT BUCKLE POSITIONING BELTS & ATTACHMENT KITS

Note: some items listed may not be available with every chair model or in conjunction with another chair feature.

NOTE: when mounting Positioning Belts to the 5R, GT or GTI, it is recommended to attach the belt by using the Backrest Support Bracket Hardware.

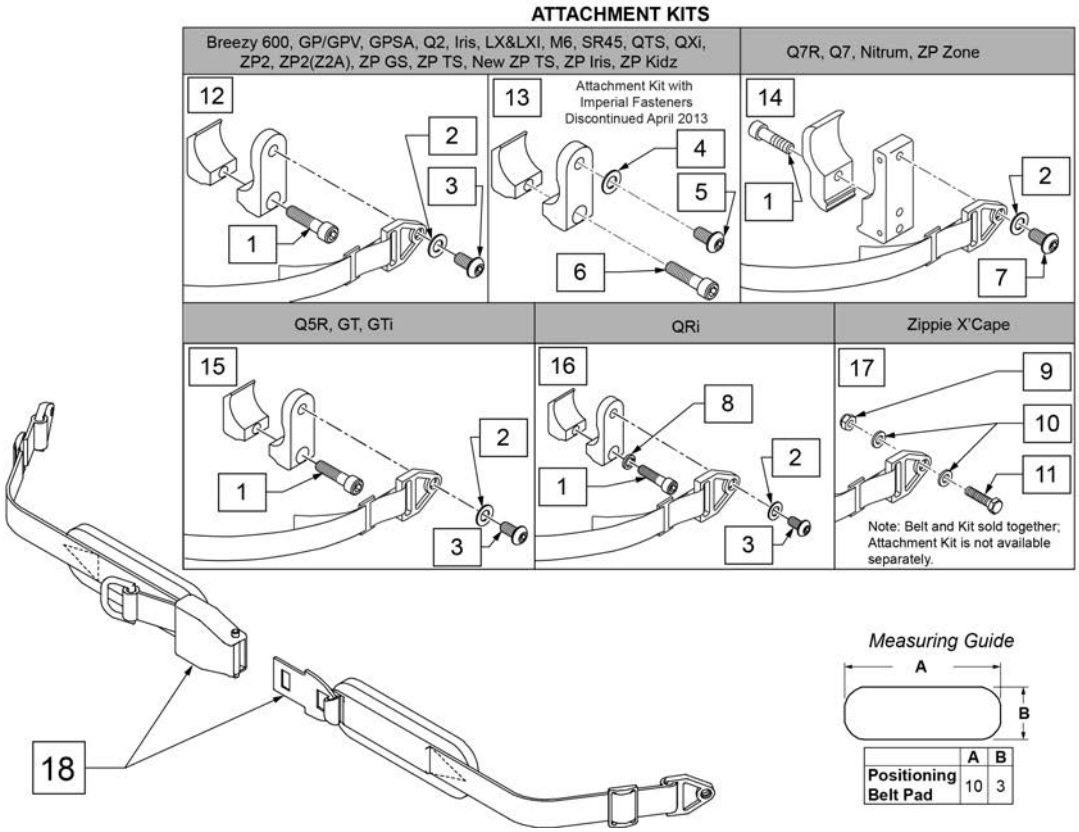

Pos.	Item Number	Description	Remarks
1	102263-003	SHCS M6 X 1 X 25 W/PL INORG	Metric
2	250104	WASHER FLAT M6	Metric
3	103185-005	BHCS M6 X 1 X 12 FULL PL	Metric
4	106943	WASHER FLAT AN 1/4 ROHS	Imperial (standard)
5	226154	1/4-20 X 1/2 BH C/S W/PATCH	Imperial (standard)
6	221116	1/4-20 X 1 SOC HD BLK	Imperial (standard)
7	230113	BHCS M6 X 1 X 12	
8	050129-001	LOCKWASHER HIGH COLLAR M6	
9	104381	NUT HEX NYLOCK M6 X 1.0	
10	107383	WASHER FLAT M6	
11	102268-002	HHCS M6 X 1 X 35 BLK	
12	120750	PSTN BELT CLAMP ASSM PR	Metric; Pair
13	900116	POSITION BELT ATTACHMENT KIT	Set of 2; Imperial (standard)
14	116268	OVAL CLAMP ASSM KIT	Kit contains 1 Clamp

Pos.	Item Number	Description	Remarks
15	159122	POSITIONING BELT CLAMPS PR	Pair
16	123534	POS BELT CLAMP KIT RPO	Set of 2
18	450418-QU	BELT 2" AIRCRAFT BUCKLE	Max length of belt 64"
18	450423-QU	BELT 2" AIRCRAFT BUCKLE W/PAD	Max length of belt 64"
18	450424	BELT 2" AIRCRAFT BKL LONG W/PAD	Max length of belt 72"
18	450425	BELT 2" AIRCRAFT BKL LONG	Max length of belt 72"
18	450419-QU	BELT 2" AIRCRAFT BKL W/QUAD LP	Max length of belt 64"
18	468419	BELT 2" AIRCRAFT BKL W/QD LPCZ	Max length of belt 64"
17,18	136464	AIRCRAFT HIP BELT 2" KIT	ZP Xcape: includes Belt & Attachment Kit
17,18	136465	AIRCRAFT HIP BELT 2" PAD KIT	ZP Xcape: includes Belt & Attachment Kit

AUTO BUCKLE POSITIONING BELT & ATTACHMENT KITS

NOTE: when mounting Positioning Belts to the 5R, GT or GTI, it is recommended to attach the belt by using the Backrest Support Bracket Hardware.

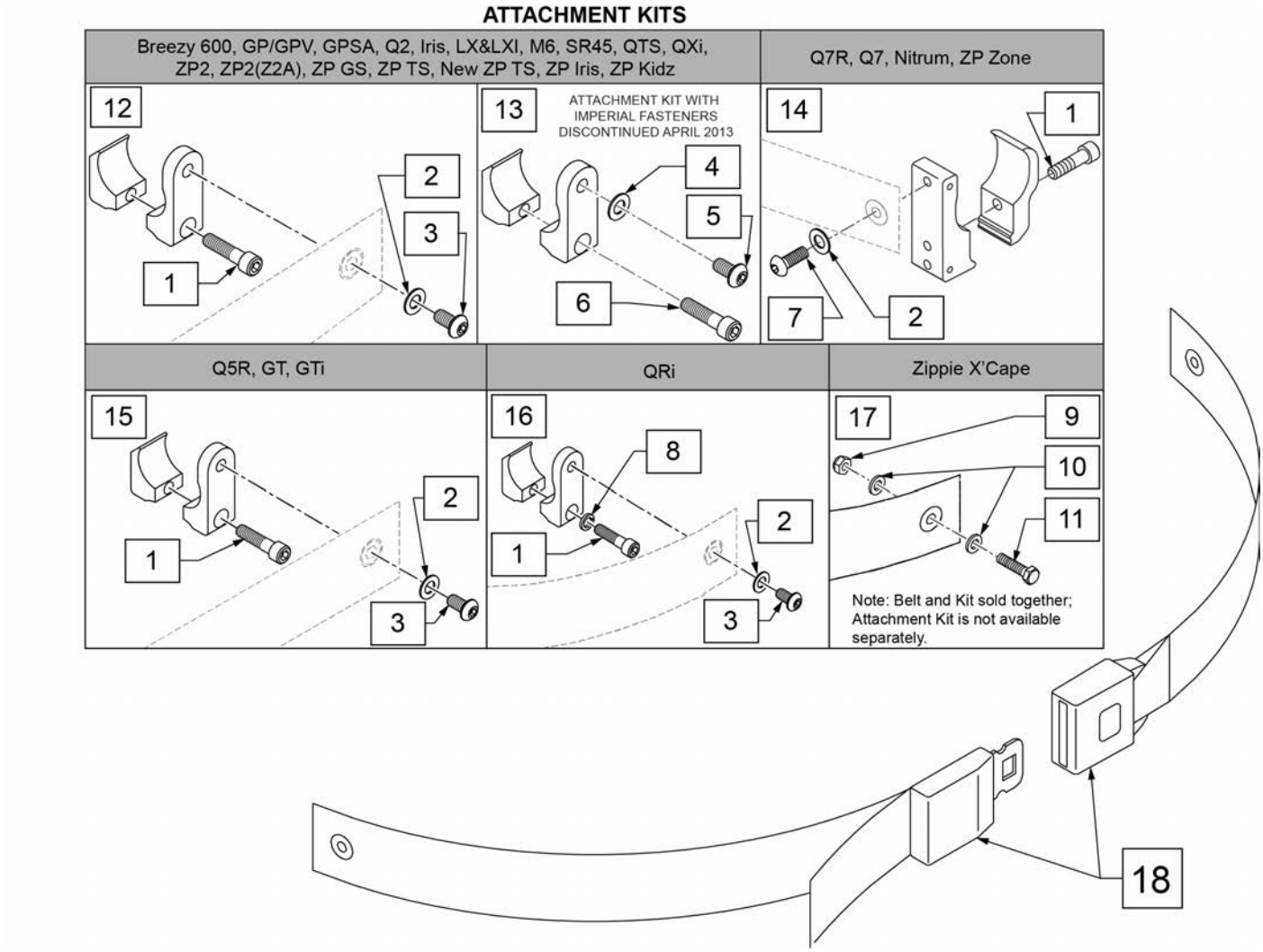

Pos.	Item Number	Description	Remarks
1	102263-003	SHCS M6 X 1 X 25 W/PL INORG	Metric
2	250104	WASHER FLAT M6	Metric
3	103185-005	BHCS M6 X 1 X 12 FULL PL	Metric
4	106943	WASHER FLAT AN 1/4 ROHS	Imperial (standard)
5	226154	1/4-20 X 1/2 BH C/S W/PATCH	Imperial (standard)
6	221116	1/4-20 X 1 SOC HD BLK	Imperial (standard)
7	230113	BHCS M6 X 1 X 12	
8	050129-001	LOCKWASHER HIGH COLLAR M6	
9	104381	NUT HEX NYLOCK M6 X 1.0	
10	107383	WASHER FLAT M6	
11	102268-002	HHCS M6 X 1 X 35 BLK	
12	120750	PSTN BELT CLAMP ASSM PR	Metric; Pair
13	900116	POSITION BELT ATTACHMENT KIT	Set of 2; Imperial (standard)
14	116268	OVAL CLAMP ASSM KIT	Kit contains 1 Clamp
15	159122	POSITIONING BELT CLAMPS PR	

Pos.	Item Number	Description	Remarks
16	123534	POS BELT CLAMP KIT RPO	Set of 2
18	750276	1 1/2" POSITION BELT	AUTOSTYLE-64" Max length of belt.
16,18	124269	AUTO POS BELT W/CLAMPS RPO	QRI: includes Belt & Attachment Kit
17,18	136463	AUTO HIP BELT 1.5" KIT	ZP Xcape: includes Belt & Attachment Kit

PLASTIC SIDE GUARD

NOTE: Right hand side shown.

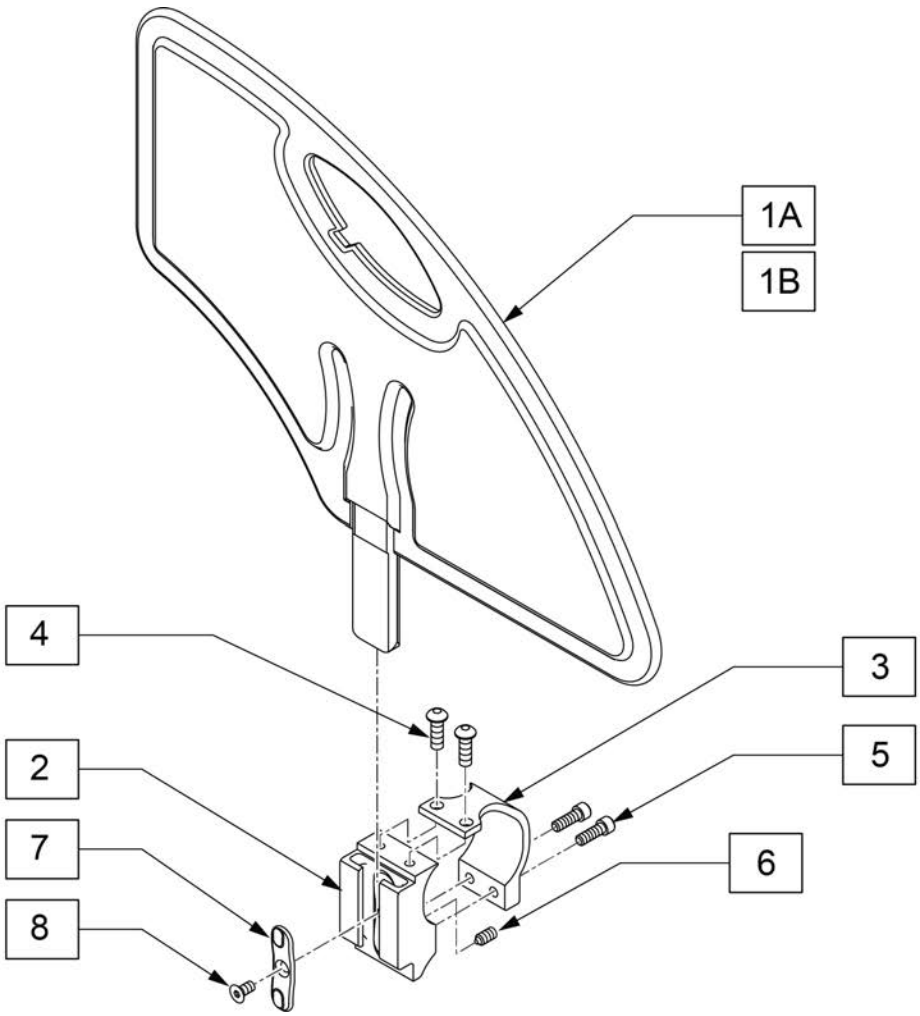

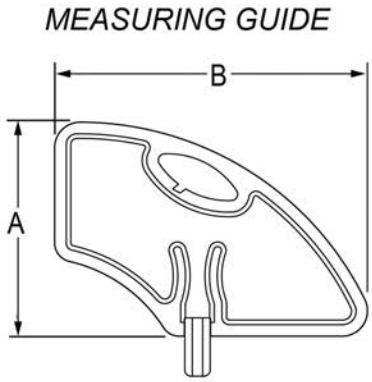

	LOW	STD
"A"	6.4"	8.4"
"B"	11.0"	12.3"

Pos.	Item Number	Description	Remarks
1A	104164-001	SIDE GUARD ASSY STD	Standard
1B	104164-002	SIDE GUARD ASSY SMALL	Low
3	112695	PLASTIC SG INNER	
4	103184-002	BHCS,M5X0.8X8,FULL,PL	
5	112697	SHCS,M5X0.8X20,FULL,PL	
6	112698	SHSS M5X0.8X8 NP	
7	108780	RECEIVER SG PLASTIC INSERT	
8	107135	FHCS #6-32 X 1/4	
2-8	115046	PLST SDE GRD REC ASSM	
2,6-8	111695	ASSY PLASTIC SG RECEIVER	
1A-8	115047	PLST SDE GRD REG W/ REC KIT (PR)	Pair-Standard
1B-8	115048	PLST SDE GRD LOW W/ REC KIT (PR)	Pair- Low

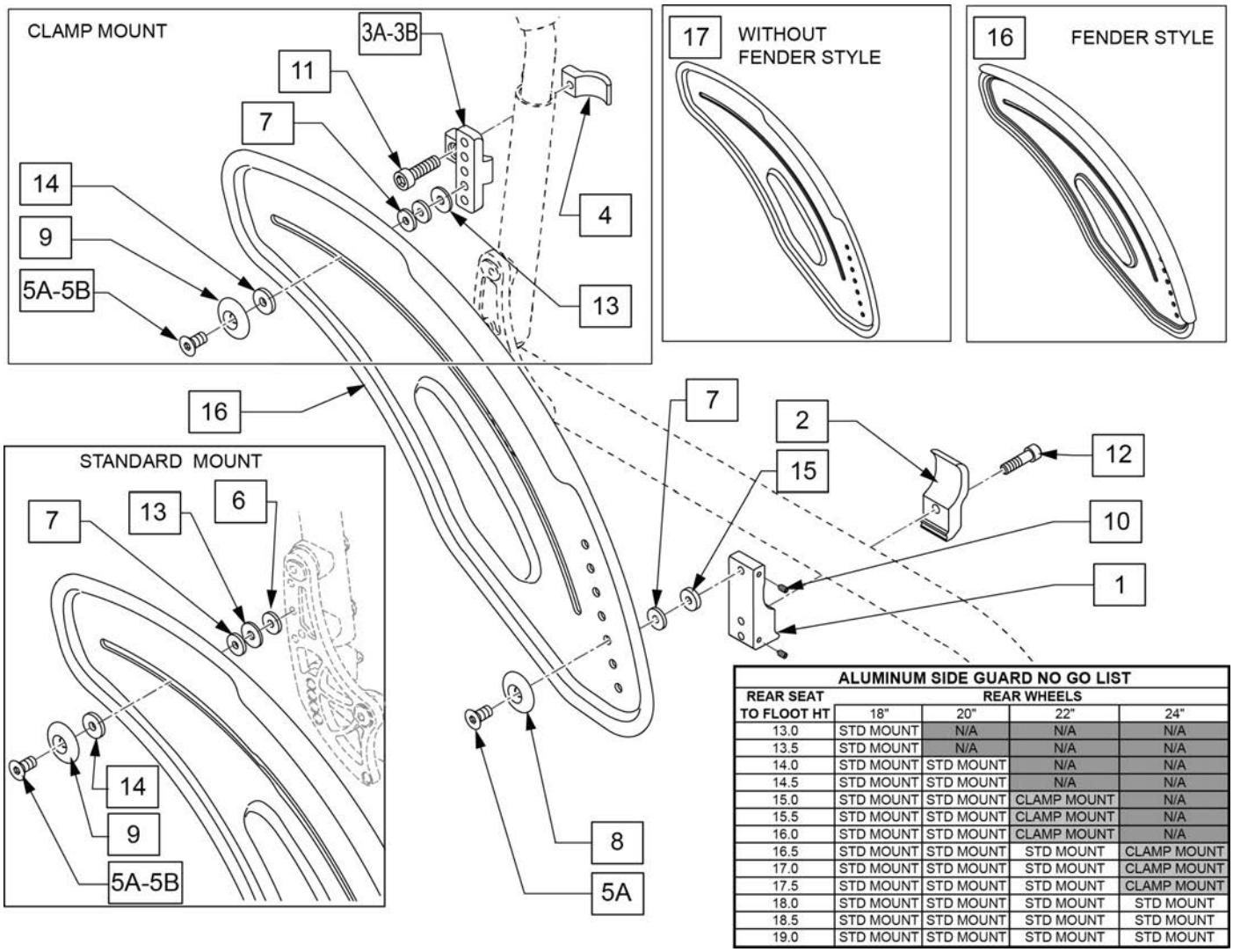

ALUMINUM SIDE GUARD NO GO LIST				
REAR SEAT	REAR WHEELS			
TO FLOOT HT	18"	20"	22"	24"
13.0	STD MOUNT	N/A	N/A	N/A
13.5	STD MOUNT	N/A	N/A	N/A
14.0	STD MOUNT	STD MOUNT	N/A	N/A
14.5	STD MOUNT	STD MOUNT	N/A	N/A
15.0	STD MOUNT	STD MOUNT	CLAMP MOUNT	N/A
15.5	STD MOUNT	STD MOUNT	CLAMP MOUNT	N/A
16.0	STD MOUNT	STD MOUNT	CLAMP MOUNT	N/A
16.5	STD MOUNT	STD MOUNT	STD MOUNT	CLAMP MOUNT
17.0	STD MOUNT	STD MOUNT	STD MOUNT	CLAMP MOUNT
17.5	STD MOUNT	STD MOUNT	STD MOUNT	CLAMP MOUNT
18.0	STD MOUNT	STD MOUNT	STD MOUNT	STD MOUNT
18.5	STD MOUNT	STD MOUNT	STD MOUNT	STD MOUNT
19.0	STD MOUNT	STD MOUNT	STD MOUNT	STD MOUNT

Pos.	Item Number	Description	Remarks
1	111844	MOUNT SIDE GUARD OVAL FRM	
2	111693	SPHA RECEIVER CLAMP	
3A	113299	AL SIDE GUARD REAR REC	prior to s/n RZ-005898
3B	118200	AL S/G REAR REC M5	after s/n RZ-005898
4	113301	AL SIDE GUARD CLAMP	
5A	113360	FH C/S M6 x 1 x 25 FULL PL	prior to s/n RZ-005898
5B	118450	FHCS, M5X0.8X25, FULL, PL	after s/n RZ-005898
6	250104	WASHER FLAT M6	
7	561026	3/4" WASHER 1/4" HOLE	
8	000 138 017	ALUMINUM SPACER	
9	000 138 014	PLASTIC SPACER	
10	113319	SHSS M4 x 0.7 x 6 FULL NP	
11	102263-005	SHCS, M6 x 1 x 20, FULL, PL	
12	102263-003	SHCS, M6 x 1 x 25, FULL, PL	
13	011111	WASHER M6 X 18 REGULAR BLK	
14	115220	SIDE GUARD SLIDE BUSHING	
15	561112	3/4 OD X .318 ID X .25 NYLON	
17	117841	SIDE GUARD AL PED LH	LEFT
17	117842	SIDE GUARD AL PED RH	RIGHT

Pos.	Item Number	Description	Remarks
16	117843	SIDE GUARD AL W/F PED LH	LEFT
16	117844	SIDE GUARD AL W/F PED RH	RIGHT
1-12	115049	SDE GRD REC ASSM	
1-16	117848	SDE GRD AL W/ FNDR KIT (PR)	Pair
1-15,17	117849	SDE GRD AL W/O FNDR KIT (PR)	Pair

1A	902001	SPK GRDS 20" QUICKIE BLK
1B	902011	SPK GRDS 22" QUICKIE BLK
1C	902021	SPK GRD 24" QUICKIE SCR MT BLK
1D	902025	SPK GRD 24" QUICKIE TAB MT BLK

7A	SPOKE GUARD 22IN CHROME WHEELS
7B	SPOKE GUARD 24IN CHROME WHEELS

2A	112644-001	SPOKE GUARD ZIPPIE 20"
2B	112644-002	SPOKE GUARD ZIPPPIE 22"
2A	112644-003	SPOKE GUARDZIPPIE 24" MAG
2B	112644-004	SPOKE GUARD ZIPPIE 24" SPOKE

8A	SPOKE GUARD 22IN PRINCESS
8B	SPOKE GUARD 24IN PRINCESS

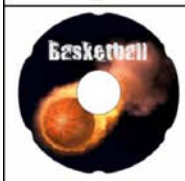

3A	SPOKE GUARD 22IN BASKETBALL
3B	SPOKE GUARD 24IN BASKETBAL

9A	SPOKE GUARD 22IN HAPPY LION
9B	SPOKE GUARD 24IN HAPPY LION

4A	SPOKE GUARD 22IN GRAFFITI
4B	SPOKE GUARD 24IN GRAFFITI

10A	SPOKE GUARD 22IN GALACTICA
10B	SPOKE GUARD 24IN GALACTICA

5A	SPOKE GUARD 22IN SUPERHERO
5B	SPOKE GUARD 24IN SUPERHERO

11A	SPOKE GUARD 22IN CHEESE
11B	SPOKE GUARD 24IN CHEESE

6A	SPOKE GUARD 22IN HOT WHEELS
6B	SPOKE GUARD 24IN HOT WHEELS

12A	SPOKE GUARD 22IN ZEBRA
12B	SPOKE GUARD 24IN ZEBRA

Pos.	Item Number	Description	Remarks
>>>>		BLACK SPOKE GUARDS	
1A	902001	SPK GRDS 20" QUICKIE BLK	Pair-BLACK-FITS 20" WHEELS
1A	902011	SPK GRDS 22" QUICKIE BLK	Pair-BLACK-FITS 22" WHEELS
1A	902021	SPK GRD 24" QUICKIE SCR MT BLK	Pair-BLACK-FITS 24" (540) MAG & SPOKE WHEELS
1A	902025	SPK GRD 24" QUICKIE TAB MT BLK	Pair-BLACK-FITS 25" (559) SPOKE WHEELS
>>>>		CLEAR SPOKE GUARDS	
1B	112644-001	SPOKE GUARD ZIPPIE 20"	Pair-CLEAR-FITS 20" WHEELS
1B	112644-002	SPOKE GUARD ZIPPPIE 22"	Pair-CLEAR-FITS 22" WHEELS
1B	112644-003	SPOKE GUARDZIPPIE 24" MAG	Pair-CLEAR-FITS 24" (540) MAG WHEELS
1B	112644-004	SPOKE GUARD ZIPPIE 24" SPOKE	Pair-CLEAR-FITS 24" (540) SPOKE WHEELS
3A	129250	SPOKE GUARD 22IN BASKETBALL 2	Each
3B	129251	SPOKE GUARD 24IN BASKETBALL 2	Each
4A	129252	SPOKE GUARD 22IN GRAFFITI	Each
4B	129253	SPOKE GUARD 24IN GRAFFITI	Each
5A	129254	SPOKE GUARD 22IN SUPERHERO	Each
5B	129255	SPOKE GUARD 24IN SUPERHERO	Each
6A	129256	SPOKE GUARDS 22IN HOT WHEELS	Each
6B	129257	SPOKE GUARDS 24IN HOT WHEELS	Each

Pos.	Item Number	Description	Remarks
7A	129258	SPOKE GUARDS 22IN CHROME WHEELS	Each
7B	129259	SPOKE GUARDS 24IN CHROME WHEELS	Each
8A	129328	SPOKE GUARD 22IN PRINCESS	Each
8B	129329	SPOKE GUARD 24IN PRINCESS	Each
9A	129330	SPOKE GUARD 22IN HAPPY LION	Each
9B	129331	SPOKE GUARD 24IN HAPPY LION	Each
10A	129332	SPOKE GUARD 22IN GALACTICA	Each
10B	129333	SPOKE GUARD 24IN GALACTICA	Each
11A	129334	SPOKE GUARD 22IN CHEESE	Each
11B	129335	SPOKE GUARD 24IN CHEESE	Each
12A	129336	SPOKE GUARD 22IN ZEBRA	Each
12B	129337	SPOKE GUARD 24IN ZEBRA	Each

Note: when adding a Tray to an existing chair with Desk or Full Length Arm Pads, add 1" to current seat width to achieve the best tray size.

Note: Large and X-Large Trays have a round cut-out.

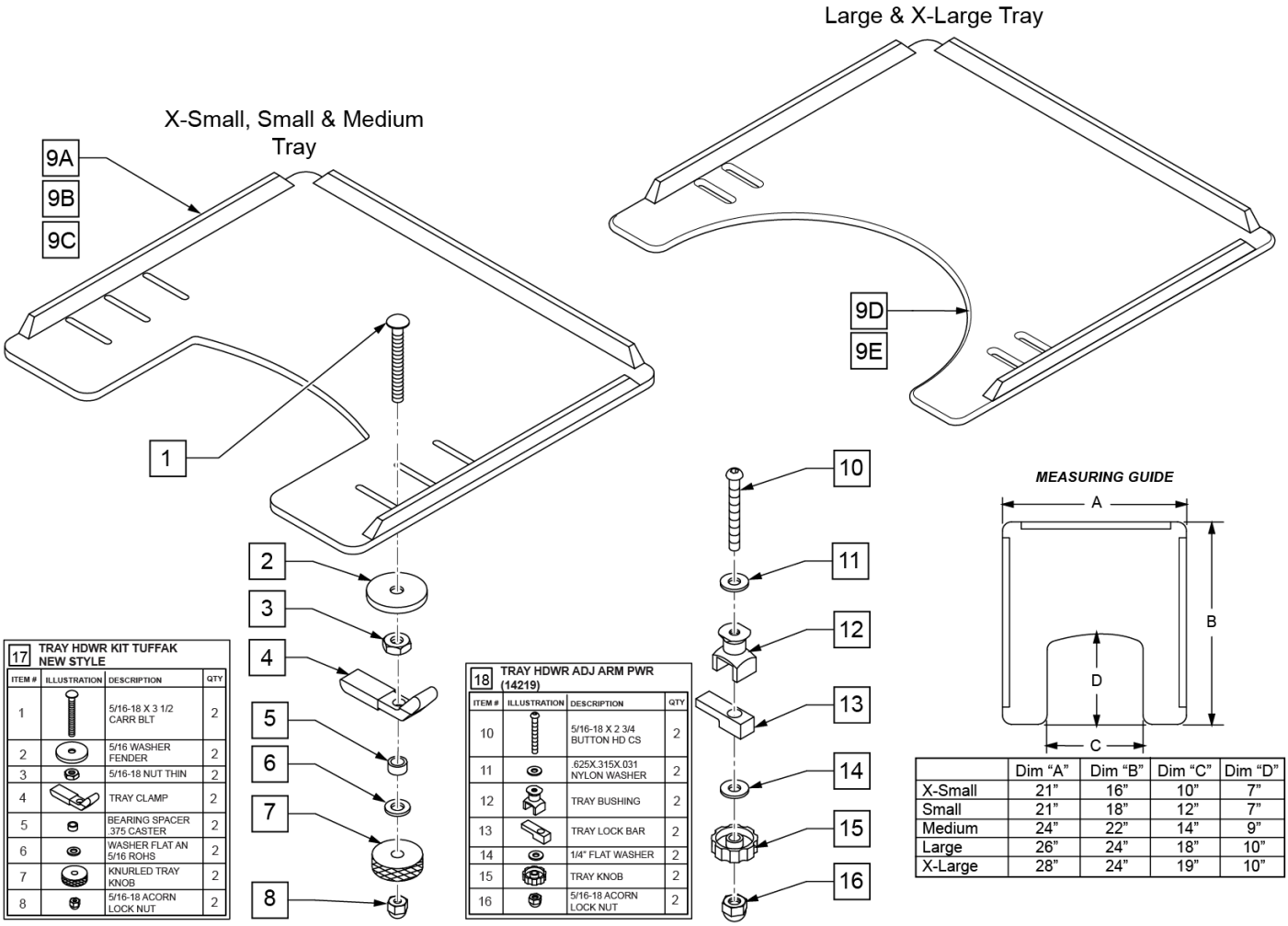

17 TRAY HDWR KIT TUFFAK NEW STYLE

ITEM #	ILLUSTRATION	DESCRIPTION	QTY
1		5/16-18 X 3 1/2 CARR BLT	2
2		5/16 WASHER FENDER	2
3		5/16-18 NUT THIN	2
4		TRAY CLAMP	2
5		BEARING SPACER .375 CASTER	2
6		WASHER FLAT AN 5/16 ROHS	2
7		KNURLED TRAY KNOB	2
8		5/16-18 ACORN LOCK NUT	2

18 TRAY HDWR ADJ ARM PWR (14219)

ITEM #	ILLUSTRATION	DESCRIPTION	QTY
10		5/16-18 X 2 3/4 BUTTON HD CS	2
11		.625X.315X.031 NYLON WASHER	2
12		TRAY BUSHING	2
13		TRAY LOCK BAR	2
14		1/4" FLAT WASHER	2
15		TRAY KNOB	2
16		5/16-18 ACORN LOCK NUT	2

	Dim "A"	Dim "B"	Dim "C"	Dim "D"
X-Small	21"	16"	10"	7"
Small	21"	18"	12"	7"
Medium	24"	22"	14"	9"
Large	26"	24"	18"	10"
X-Large	28"	24"	19"	10"

Pos.	Item Number	Description	Remarks
1	226199	5/16-18 x 3 1/2 CARR BOLT	
2	263112	5/16 WASHER FENDER	
3	202110	5/16-18 NUT THIN	
4	550400	TRAY CLAMP	
5	481113	SPACER 5/16 X .380	
6	263100	5/16 AN WASHER FLAT	
7	483026	KNURLED TRAY KNOB	
8	202114	5/16-18 ACORN LOCK NUT	
9A	562619	TRAY TOP EX-SM W/RAIL	
9B	562620	TRAY TOP SM W/RAIL	
9C	562621	TRAY TOP MED W/RAIL	
9D	562622	TRAY TOP LRG W/RAIL	
9E	562623	TRAY TOP X-LRG W/RAIL	

Pos.	Item Number	Description	Remarks
17	881051	TRAY HARDWARE KIT TUFFAK NEW STYLE	Pair
18	881053	TRAY HARDWARE ADJ ARM PWR (14219)	Pair
1-8,9A	902306	TRAY ASSEMBLY EX-SM TUFFAK (10 -12")	Fits 10"-12" wide chairs
1-8,9B	902303	TRAY ASSEMBLY SM TUFFAK (13 -14")	Fits 13"-14" wide chairs
1-8,9C	902304	TRAY ASSEMBLY MED TUFFAK (15 -17")	Fits 15"-17" wide chairs
1-8,9D	902305	TRAY ASSEMBLY LRG TUFFAK (18 -20")	Fits 18"-20" wide chairs
1-8,9E	902309	TRAY ASSEMBLY X-LRG TUFFAK (21 -22")	Fits 21"-22" wide chairs
9A,10-16	902330	TRAY ASSM X-SM TFK 10-12/CAM	Fits 10"-12" wide chairs
9B,10-16	902331	TRAY ASSM SM TUFFAK 13-14/CAM	Fits 13"-14" wide chairs
9C,10-16	902332	TRAY ASSM MED TUFFAK 15-17/CAM	Fits 15"-17" wide chairs
9D,10-16	902333	TRAY ASSM LRG TUFFAK 18-20/CAM	Fits 18"-20" wide chairs

TRAY HARDWARE

(03/25/2019)

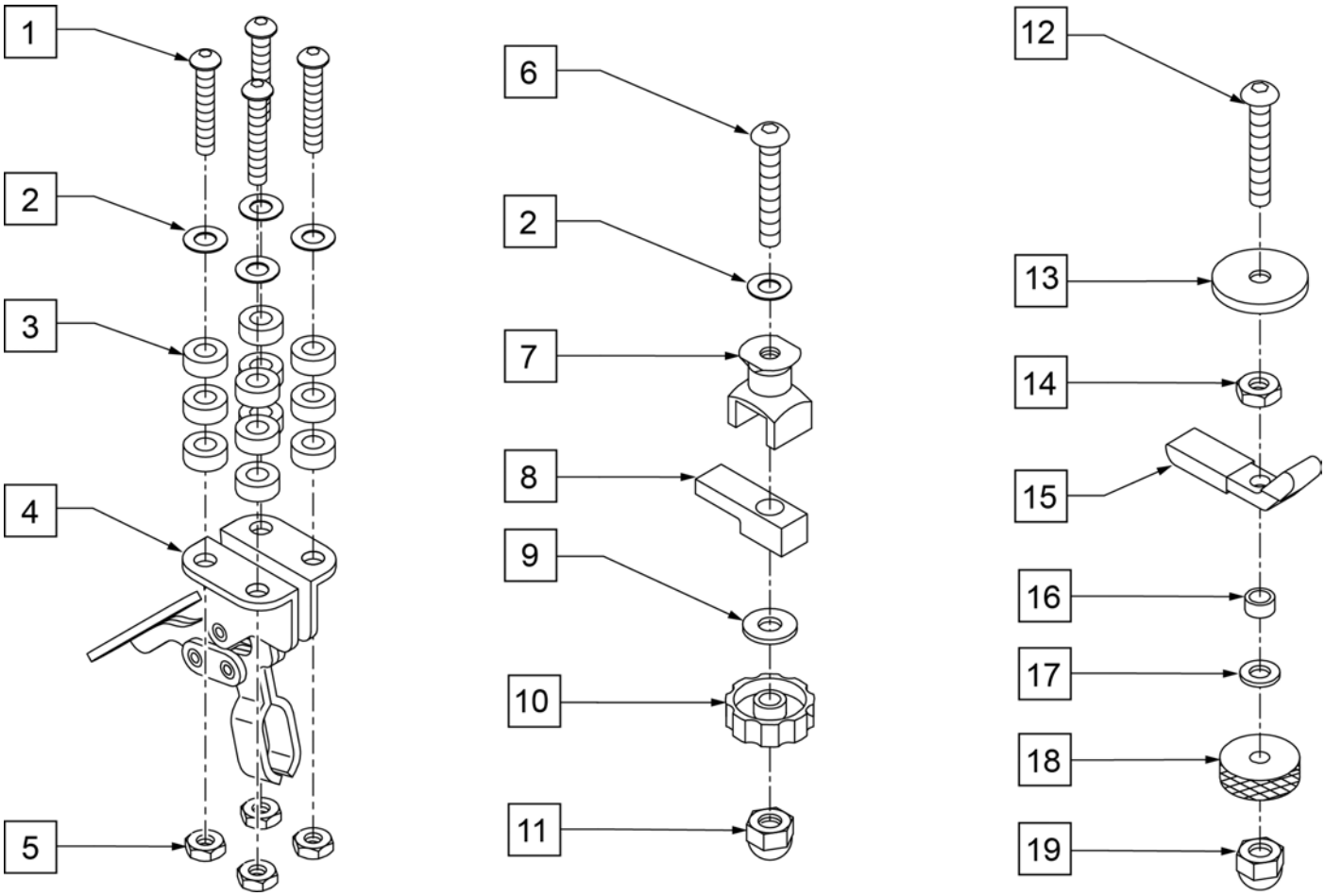

Pos.	Item Number	Description	Remarks
1	2249	5/16-18 x 1 1/2 BH C/S BLK	
2	2709	.625 x .135 x .031 NYLON WASHER	
3	2710	.609 x .250 x .250 NYLON SPACER	
5	202110	5/16-18" NUT THIN	
6	2021	5/16-18" x 2 3/4" BUTTON HD C/S	
7	14240	TRAY BUSHING	
8	14230	TRAY LOCK BAR	
9	2705	1/4" FLAT WASHER	
10	14220	TRAY KNOB	
11	202114	5/16-18" ACORN LOCK NUT	
12	226199	5/16-18" x 3 1/2" CARR BOLT	
13	263112	5/16 WASHER FENDER	
14	202110	5/16-18" NUT THIN	
15	550400	TRAY CLAMP	
16	481013	BEARING SPACER	
17	263100	5/16" AN WASHER FLAT	
18	483026	KNURLED TRAY KNOB	
19	202114	5/16-18" ACORN LOCK NUT	
1-5	4099	TOGGLE CLAMP - HIDEAWAY	
2,6-11	881053	TRAY HARDWARE ADJ ARM PWR (14219)	
12-19	881051	TRAY HDWR KIT TUFFAK NEW STYLE (9QH)	Pair

QUICKIE CADDY

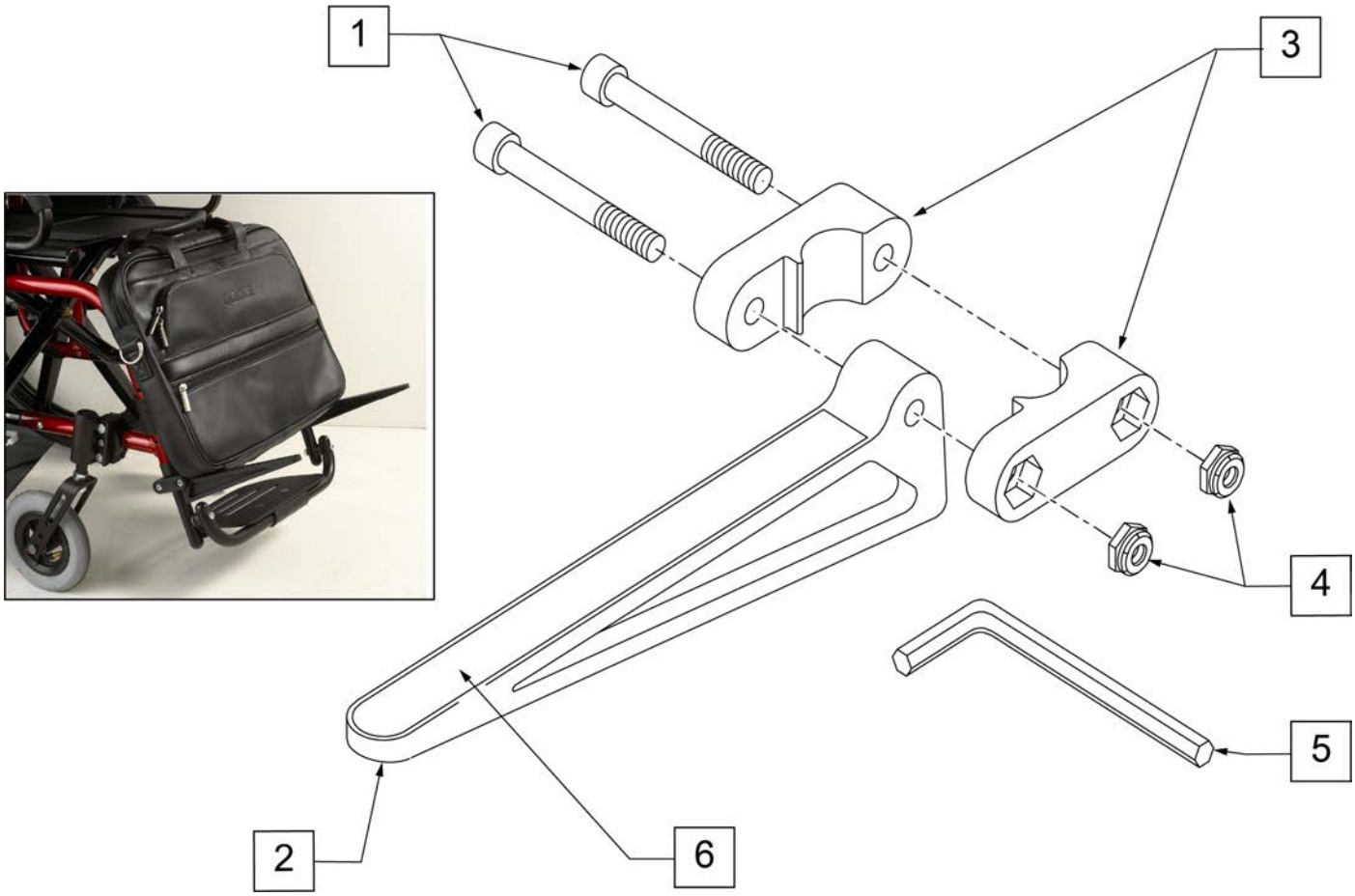

Pos.	Item Number	Description	Remarks
1	106975	1/4-28 x 1 1/4 SOC C/S	
2	561105	CADDY ARM	Clamps on to Extension Tube (3/4" round and D2); Caddy Arm length is 7 1/2"
3	561104	CADDY CLAMP	Clamps on to Extension Tube (3/4" round and D2)
4	106935	1/4-28 NYLOCK NUT THIN	
5	349998	3/16" ALLEN WRENCH	
6	580050	CADDY TAPE	
1-6	902350	QUICKIE CADDY (PR)	

CRUTCH HOLDER (RIGID CHAIRS) [11/2009]

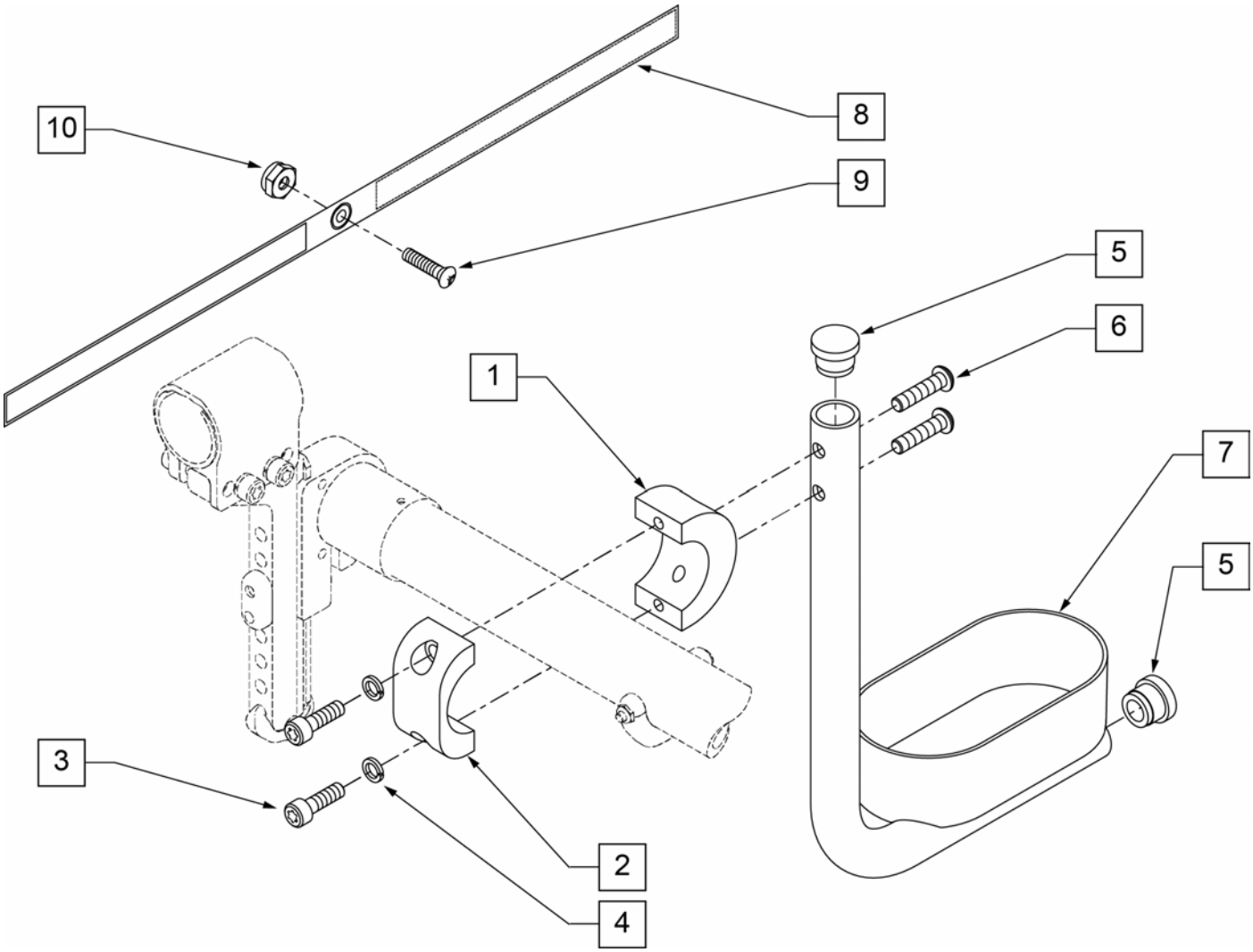

Pos.	Item Number	Description
1	050076	CLAMP SADDLE CRUTCH HOLDER
2	050077	CLAMP CRUTCH HOLDER
3	102263-001	SHCS M6 x 1 x 16 FULL NP
4	050129-001	LOCKWASHER HIGH COLLAR M6
5	561000-QU	3/4" INSERT PLUG .083
6	102262-004	BHCS M6 X 1 X 25 W/PL INORG
8	750495	CRUTCH HOLDER STRAP F
9	281110	10-32 X 1/2 PAN PHIL
10	200100-QU	10-32 NYLOCK NUT
1-10	050169	ASSM CRUTCH HOLDER GT W/HDWR

ADJUSTABLE LEG STRAP

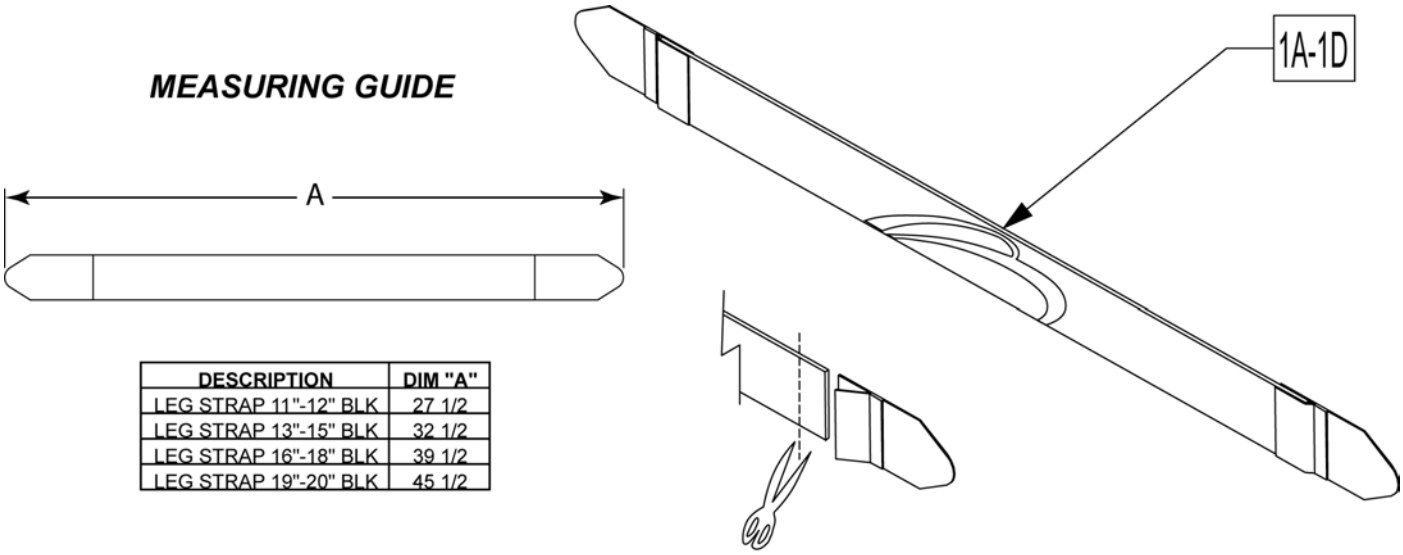

DESCRIPTION	DIM "A"
LEG STRAP 11"-12" BLK	27 1/2
LEG STRAP 13"-15" BLK	32 1/2
LEG STRAP 16"-18" BLK	39 1/2
LEG STRAP 19"-20" BLK	45 1/2

Leg Straps may be custom cut to a smaller size

Pos.	Item Number	Description
1A	113255	LEG STRAP 11"-12" BLK
1B	113256	LEG STRAP 13"-15" BLK
1C	113257	LEG STRAP 16"-18" BLK
1D	113258	LEG STRAP 19"-20" BLK

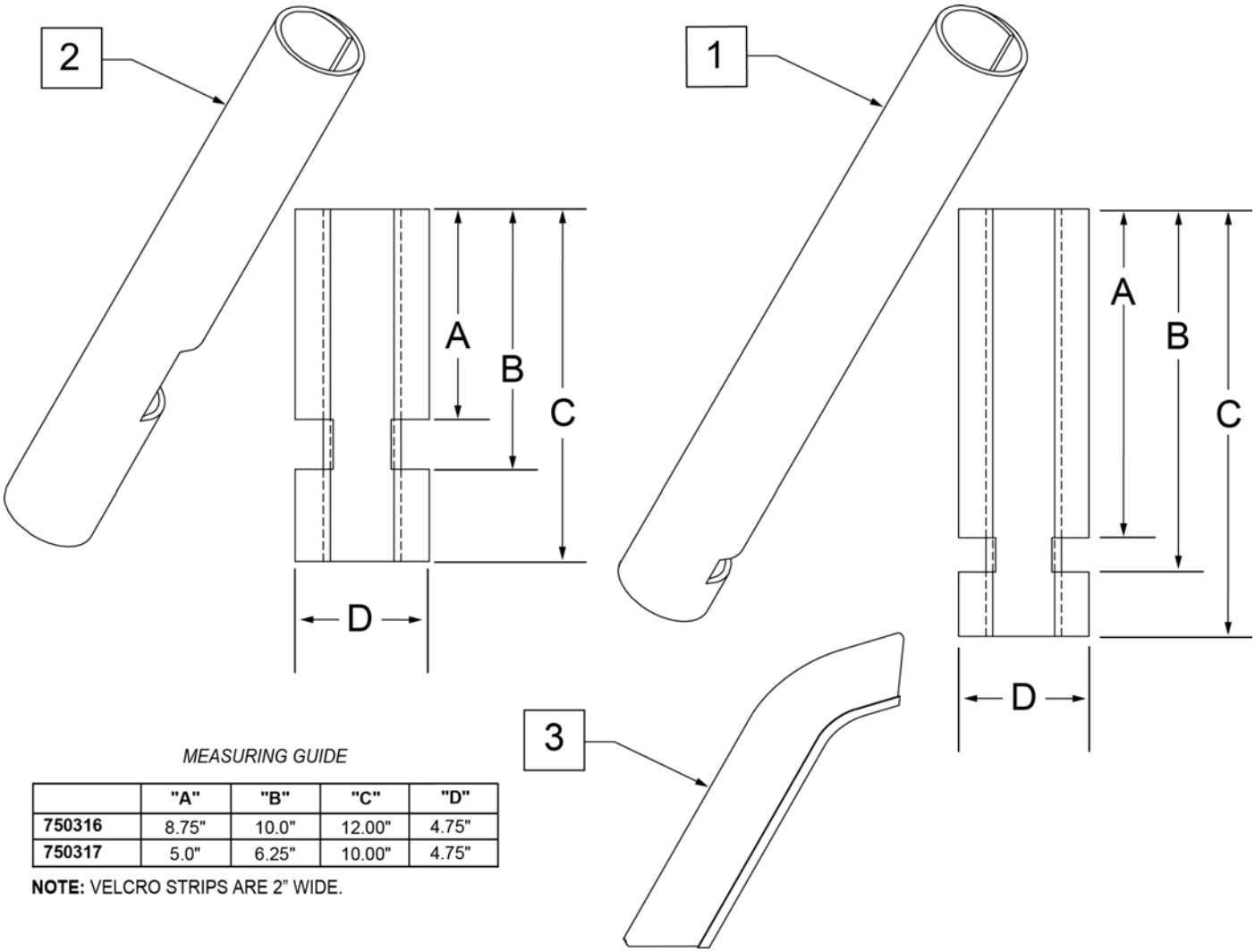

MEASURING GUIDE

	"A"	"B"	"C"	"D"
750316	8.75"	10.0"	12.00"	4.75"
750317	5.0"	6.25"	10.00"	4.75"

NOTE: VELCRO STRIPS ARE 2" WIDE.

Pos.	Item Number	Description	Remarks
1	750316	IMPACT GUARDS NEOPRENE FIXED (PR)	PAIR-Fixed Front Frame
2	750317	IMPACT GUARDS NEOPRENE S/A	PAIR-S/A Footrest & Q7
3	109231	GEL VELCRO PAD HANGER/FRAME	PAIR- fits S/A & Fixed Front Frame
4	108315	GEL PAD SA ARM	Single, fits Padded SA Armrest

TIRE PUMP

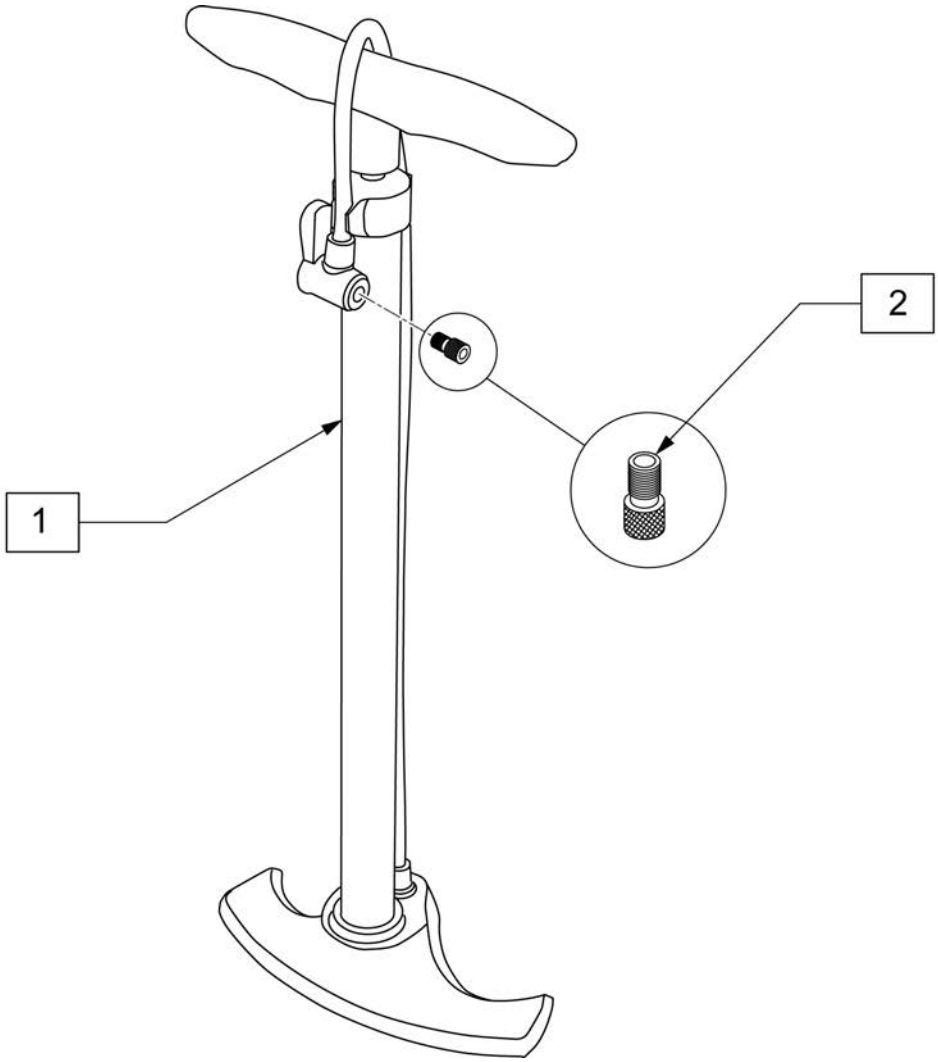

Pos.	Item Number	Description
1	389050	TIRE PUMP
2	381230	VALVE ADAPTER PRESTA

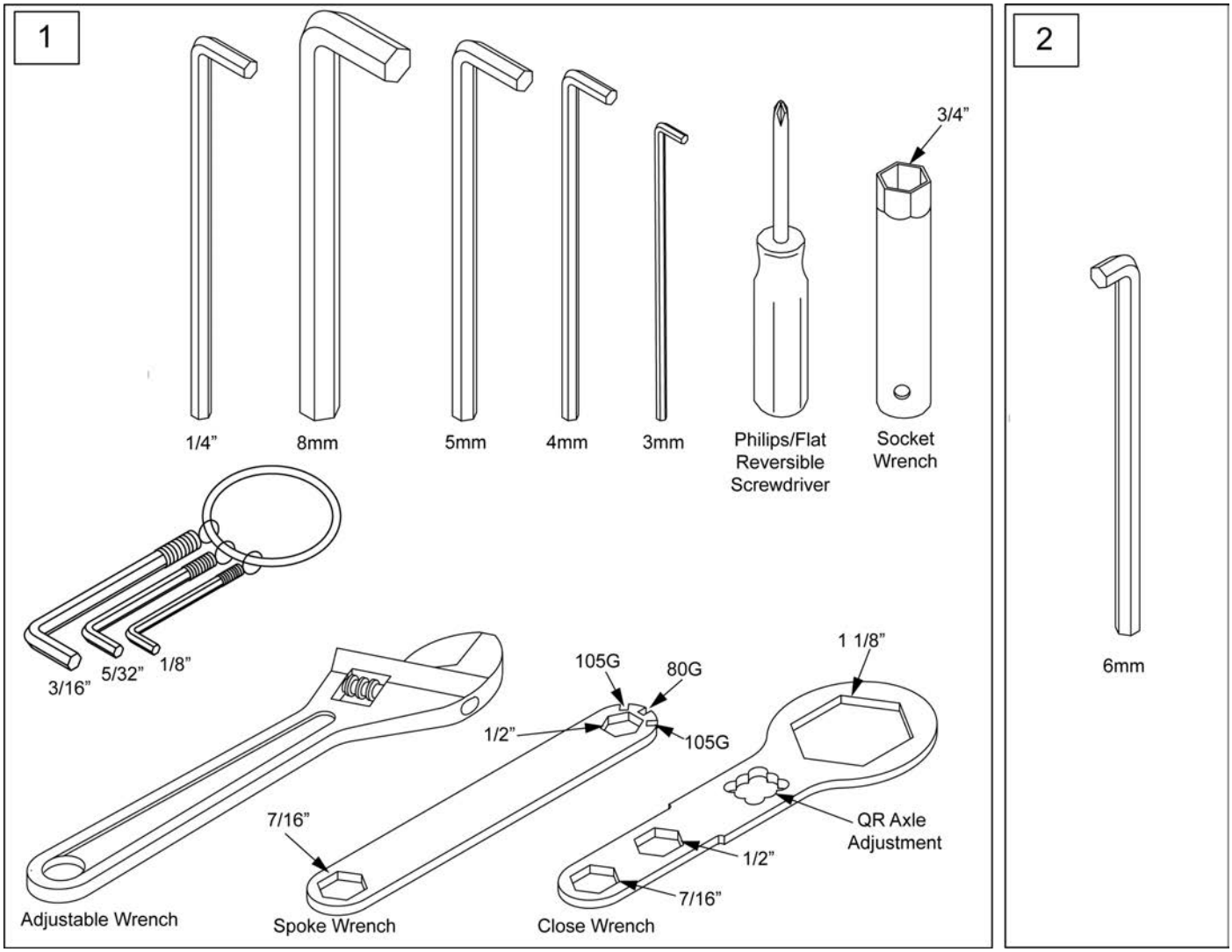

Pos.	Item Number	Description	Remarks
1	108314	QUICKIE COMBO TOOL KIT	Includes pouch
2	113403	6MM ALLEN WRENCH L, 7MM SHORT	caster spline chairs only

back cover