VEVOR®

TOUGH TOOLS, HALF PRICE

Technical Support and E-Warranty Certificate www.vevor.com/support

ELECTRONIC DRINK MIXER

USER'S MANUAL

Model：DM21-U/DM22-U/DM23-U

We continue to be committed to provide you tools with competitive price.
"Save Half", "Half Price" or any other similar expressions used by us only represents an estimate of savings you might benefit from buying certain tools with us compared to the major top brands and doses not necessarily mean to cover all categories of tools offered by us. You are kindly reminded to verify carefully when you are placing an order with us if you are actually saving half in comparison with the top major brands.

VEVOR®

TOUGH TOOLS, HALF PRICE

ELECTRONIC DRINK MIXER

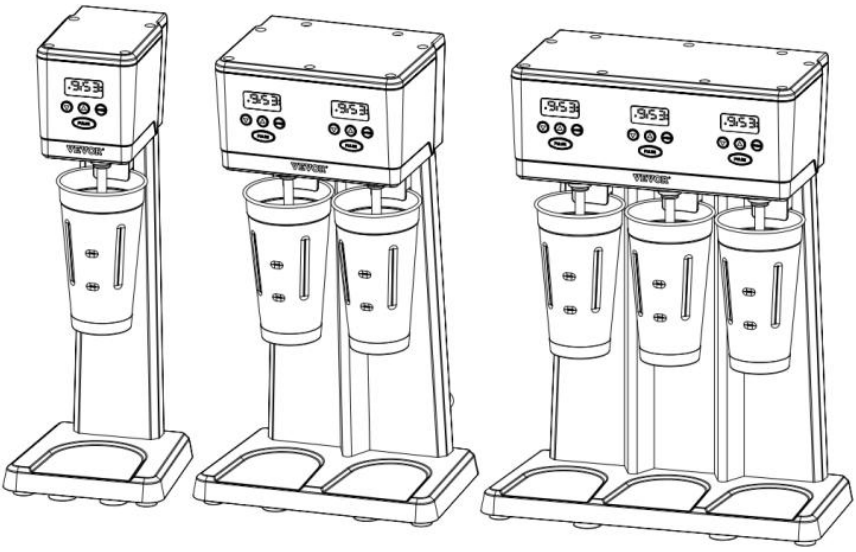

NEED HELP? CONTACT US!

Have product questions? Need technical support? Please feel free to contact us:

CustomerService@vevor.com

This is the original instruction, please read all manual instructions carefully before operating. VEVOR reserves a clear interpretation of our user manual. The appearance of the product shall be subject to the product you received. Please forgive us that we won't inform you again if there are any technology or software updates on our product.

	For your safety of this product, always read the instruction book carefully before using.
	Alternating current
	Connect an earth terminal to the ground

When using electrical appliances, basic safety precautions should be followed, including the following.

1. **READ ALL INSTRUCTIONS.**
2. **Unplug from outlet when not in use, before putting on or taking off parts, and before cleaning.**
3. Please check that the specified supply voltage in the product is consistent with the supply voltage(AC only).
4. This appliance can be used by children aged from 8 years and above and persons with reduced physical, sensory or mental capabilities or lack of experience and knowledge if they have been given supervision or instruction concerning use of the appliance in a safe way and understand the hazards involved.
5. Children shall not play with the appliance. Cleaning and user maintenance shall not be made by children without supervision.
6. To protect against electrical hazards, do not put the Drink Mixer in water or other liquids
7. Avoid contact with moving parts.
8. Do not operate the Drink Mixer or any other electrical equipment with a damaged cord or plug, or after the unit malfunctions or is dropped or damaged in any manner. Return it to the nearest authorized service facility for examination, repair, or adjustment.
9. Do not use outdoors. **FOR HOUSEHOLD USE ONLY**
10. Do not let the cord hang over the edge of the table or counter or touch hot surfaces.
11. Put this instruction manual in a safe place. Do not discard.

12. If the supply cord is damaged, it must be replaced by the manufacturer, its service agent or similarly qualified persons in order to avoid a hazard.
13. **Electric Shock Danger!** Non-professional personnel are forbidden to repair the products, otherwise it may result in electrical shock. When failures happen, it should be repaired by a qualified maintenance personnel.
14. **WARNING!** It is strictly prohibited to put the main body of the machine and the power cord into any liquid. The machine must be fully cool before cleaning.
15. Do not place the product directly on the fire or near the source of fire, otherwise the product will be damaged or even result in danger. Once part of the product is on fire, do not directly use water to extinguish the fire. Use a wet cloth to cover the fire site.
16. When the plug is plugged into the socket, it must be plugged to the end, otherwise it will cause the components overheating and burning due to poor contact.
17. Do not leave the product to work with no one watching. If the machine is overheating, please stop working immediately and unplug the power.

SAVE THESE INSTRUCTIONS

PRODUCTS SPECIFICATIONS

Model	DM21-U	DM22-U	DM23-U
Voltage	AC 120V 60Hz		
Rated Amp.	1.1A	2.0A	3.3A
Speed	3 speed setting +Pulse		
Timer	8 setting 20/40/60sec; 2/4/6/8/10 min		

PARTS AND FEATURE

Explanation of the Product's components:

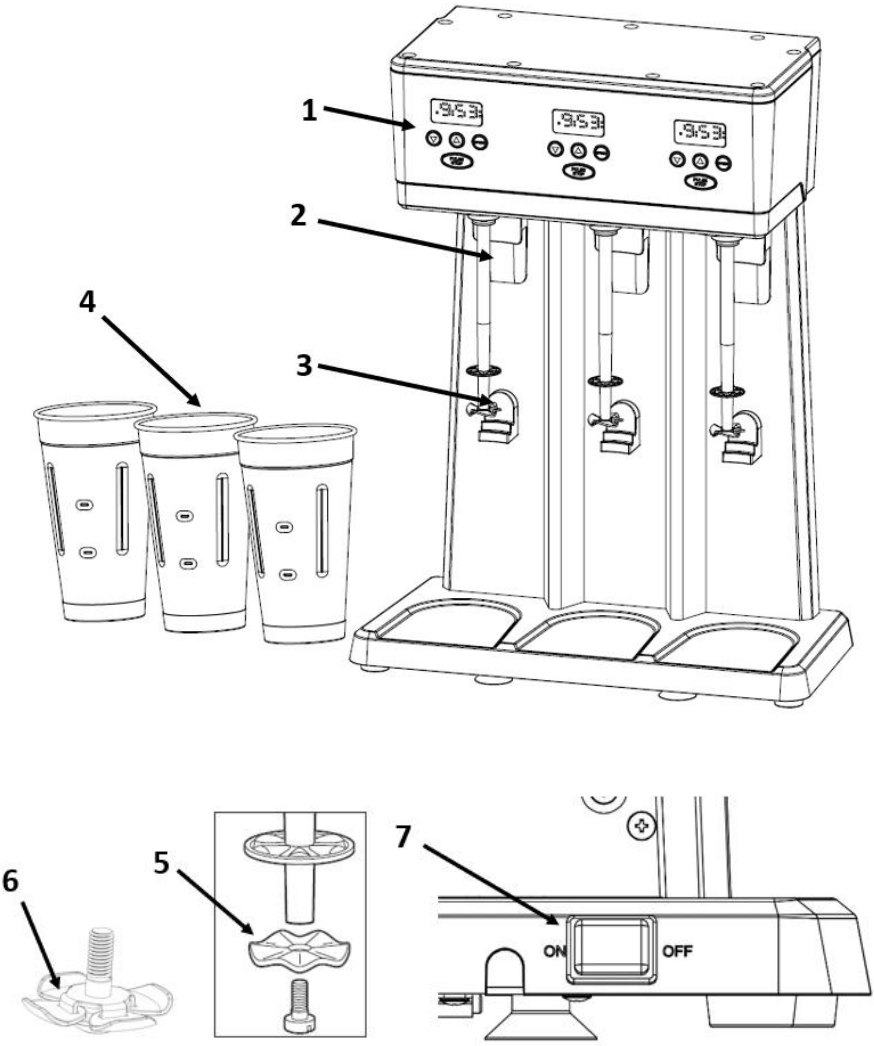

1.Control Switch 2.Cup Actuator (ON/OFF) 3.Cup Support 4.Mixing Cup	5.Solid Disk Agitators 6.Moving-Wing Agitators 7.POWER ON/OFF (at Back)

OPERATING THE DRINK MIXER

The Drink Mixer has an automatic ON/OFF button (Cup Actuator (#2)) that starts the motor when the mixing cup is placed in the proper position on the Cup Support (#3). The Cup Support has two steps. To activate the automatic ON/OFF button, the bottom of the mixing cup must be securely resting on the upper step of the Cup Support, and the top rim of the mixing cup must go behind the front tab of the Cup Actuator.
The motor will continue to operate while the mixing cup remains on the mixer, activating the actuator. Removal of the mixing cup will shut off the motor.

Power ON/OFF button (#6): at the Back of Unit.

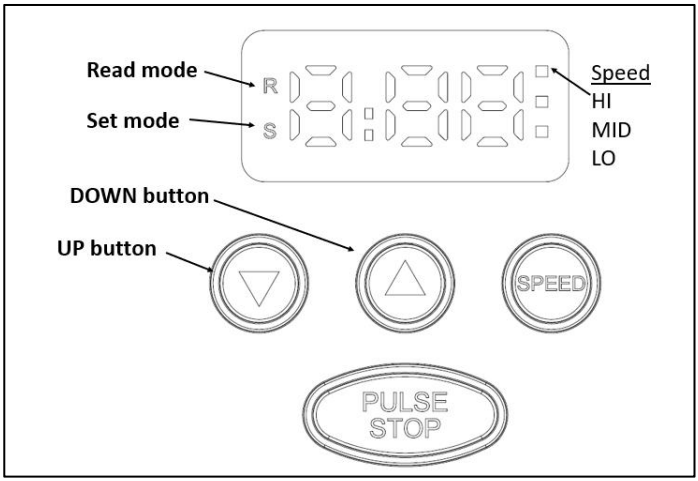

Control Switch (#1)

The 3-speed button on the front of the Drink Mixer regulates the operating speed. Choose speed for LO, MED, or HI. For mixing heavy drinks, use HI speed only; for light drinks with more liquid, use LO speed.
The drink mixer can be operated without engaging the ON/OFF cup actuator by using the PULSE button. The PULSE button will operate at whatever speed the 3-speed button is set. The PULSE button will operate only while depressed.

Keep a firm grip on the cup while using PULSE.
For change agitators (#5/6), simply hold the spindle shaft with one hand and turn the agitator in a clockwise direction. This will loosen the screw, and you can unscrew to remove. Insert replacement agitator and screw bottom screw back in. Use only a standard metal mixing cup with the standard agitator.

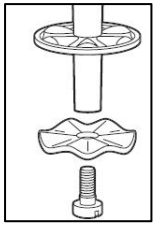

KEY BUTTON

1. UP Button + (upward Arrow):

a.Used for scrolling up to set time. If holding down, time will advance by 10 seconds for every 1 second pressed. Every press will advance time 1 second

b.Used for turning timer On/Off. Press UP Button rapidly 3 times to turn timer OFF and display "---" pressing UP Button or DOWN Button again will turn timer back on.

2. DOWN Button -- (downward Arrow):

a.Used for scrolling down to set time. If holding down, time will decrease by 10 seconds for every 1 second pressed. Every press will reduce time by 1 second.

b.Used for setting the countdown timer, holding the DOWN Button down for more than 3 seconds puts the timer into the Set mode: S0:00.

3. Speed Button:

a.Every press will increase the speed from Lo to Hi. This is circular, so 3 presses get you back to Lo.

4. Pulse/STOP Button:

a.Press and hold Pulse Button and the mixer runs at the set speed until button is released.

b.Pressing the Pulse/STOP button will stop the motor while Cup Actuator engages the motor. Re-pressing will restart the motor again.

Timer range: 0:01-9:59

TIMER SETTING

To activate the timer, press UP or Down button once. Timer will read (R0:00). To deactivate timer, press UP button 3 times rapidly.

Manual COUNTDOWN Timer Setting

1. To activated Timer and in the ON position (R0:00).
2. Press and hold the DOWN button for 3 seconds to enter the SET mode (display will blink during SET mode), S0:00.
3. Use UP and DOWN buttons to set the desired time.
4. Wait 5 seconds and time will be set.
5. To reset time, press and hold UP and DOWN buttons simultaneously for 3 seconds.

Auto SAVE Timer SETTING

1. To activated Timer and in the ON position (R0:00).

2. Place the cup and actuate Motor. Timer will begin to count up.

3. Remove the cup when your mix has reached its desired consistency.

4. Press and hold the UP button for 3 seconds to set the time OR replace the cup within 10 seconds to continue the count.

NOTE: If cup is removed during countdown or count-up, the timer will pause and blink for 10 seconds. Replace the cup within the 10 seconds to continue, or timer will return to set time.

The timers will need to be set individually if more than one timer in unit.

Your Drink Mixer timer can be programmed manually or set while the unit is in use.

CLEANING

● TURN UNIT OFF USING POWER SWITCH LOCATED ON BACK OF UNIT, OR UNPLUG MIXER POWER CORD FROM ELECTRICAL OUTLET.
● DO NOT PUT IT IN THE DISHWASHER
● DO NOT IMMERSE APPLIANCE IN WATER OR OTHER LIQUID.

1. To clean the drink mixer, wipe with a damp cloth or spongy. Do not use abrasive cleaners of any type.
2. To clean the mixing shaft, place 200ml warm, soapy water in Mixing Cup and place it on the mixer's normal operating position. Run on LO speed for 30 seconds—empty Cup. When finished, turn the unit OFF.
3. Repeat Step 1 with warm water only to rinse mixer shaft.
4. With unit turned to OFF, unplug unit and wipe residual soap and water from the mixing shaft with a damp cloth or sponge.
5. The Mixing Cup should be washed in warm, soapy water or in a dishwasher.

HELPFUL HINTS

1. Always turn unit off or unplug the Drink Mixer before disassembling or assembling parts.
2. Keep all the instructions and service information in a safe and handy place.
3. If using ice, only use crushed ice in the Drink Mixer.
4. Clean the Drink Mixer thoroughly before initial use.
5. Keep mixing cups clean. Wash, rinse and sanitize thoroughly after use.

6. Be sure that all detachable parts are fastened tightly before operating the Drink Mixer.
7. Operate the Drink Mixer only when it is fully assembled.
8. To avoid splashing drinks of thin consistency, operate on Speed LO.
Any other servicing should be performed by an authorized service representative.

TROUBLESHOOTING GUIDE

	Problem	Solution
1	Ingredients are not being mixed Properly	Try select a different speed.
2	Motor does not turn on when Cup is set on Cup Support	● Cup is not tall enough to activate motor switch. ● The unit features a thermal overload protection circuit. Turn unit OFF, wait 30min. Then turn on again.
3	Excessive product splash-out (Some splash-out is common)	● Ingredients too full ● Speed setting too high for ingredients ● Agitator fastened tightly to the spindle ● Agitator bent or worn.

Made In China

VEVOR®

TOUGH TOOLS, HALF PRICE

Technical Support and E-Warranty Certificate

www.vevor.com/support