USER'S MANUAL

FROST FREE
REFRIGERATOR

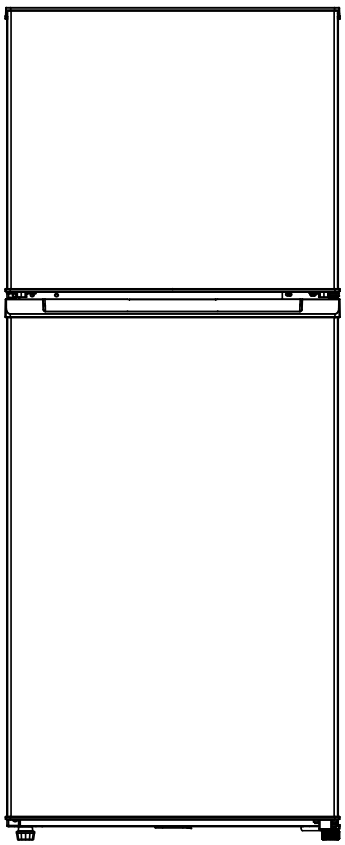

Models :

TFF210WNTAM
TFF210SNTAM
TFF240WNTAM
TFF240SNTAM
TFF270WNTAM
TFF270SNTAM

To ensure proper use of the appliance and your safety, please read the following user manual completely before use.

- Thank you for purchasing our product and thank you for placing your confidence in us.
- Read this manual carefully before use. Follow instructions and keep the manual for future reference.
- Follow the operating instructions and safety notices in this manual.
- If any trouble arise, do not attempt to fix it yourself. Please contact TECO service on 1300 660 037 (8:30am - 4pm Mon~Fri AEST).
- This refrigerator is designed and approved for use with flammable R600a refrigerant.
- The appliance is specifically constructed for domestic use and is therefore suitable for the refrigeration and storage of fresh and frozen foods and the production of ice-cubes. The appliance has not been designed or manufactured for professional use. TECO declines all responsibility for damage deriving from improper use of the appliance. The refrigerator has undergone the necessary tests on the tightness of the refrigeration circuit and complies with the safety regulations for electrical appliances.
- All images, illustrations and photos contained in this manual are for illustration purposes only and may differ from your appliance.



WARNING ICON
This symbol indicates information concerning your personal safety



CAUTION ICON
This symbol indicates information on how to avoid damaging the appliance



FLAMMABLE ICON



R600a WARNING LABEL

TABLE OF CONTENTS

Safety Information..... 4

Name of Parts and Usage 6

Packing List 9

Transporting the Appliance & Installation 10

Operating Instructions 11

Temperature Settings 11

Energy Saving Tips 12

Reversing The Door 13

Maintenance 15

Disconnection of the Appliance 17

Troubleshooting 17

Speci cations 19

Repairs, Service & Warranty 21

Warranty Information ..... Back cover

SPECIAL FEATURES

◊ Frost Free
◊ Internal LED Lighting
◊ Electronic Temp. Control with LED Display
◊ Spill Proof Tempered Glass Shelves
◊ Portable Ice Cube Maker
◊ Vegetable Crisper with Humidity Control
◊ Preservation Light
(not available in TFF210WNTAM or TFF210SNTAM models)



R600a Isobutane Refrigerant

- Hydrocarbon refrigerants have excellent refrigerant properties and minimal low global warming potential and no ozone depletion potential.
- This appliance contains a small quantity of flammable, non-synthetic R600a refrigerant:
- Hydrocarbon refrigerants cannot be 'retrofitted' to the appliance that has not been designed and approved to use that type of refrigerant.
- Ensure that the tubing of the refrigerant circuit is not damaged during transportation and installation.
- Leaking refrigerant may cause eye injuries or could ignite.
- The room for installing the appliance must be at least 1m^3 per 8g of refrigerant. The amount of refrigerant in the appliance can be found on the rating plate attached to the appliance.

Risk of fire



If the refrigerant circuit should become damaged. Avoid open flames and sources of ignition. Disconnect the appliance from the mains power. Thoroughly ventilate the room in which the appliance is situated for several minutes.

SAFETY INFORMATION

- The refrigerator is designed to operate on a single phase power supply within a voltage range of 220~240V/50Hz.
- The refrigeration system contains refrigerant. Do not allow any sharp objects to come in contact with the refrigerant system to avoid damage the refrigerant circuit.
- This product is for indoor use only.
- Do not place electrical items or cooking equipment nearby. Keep away from substances which could cause ignition and good ventilation shall be always maintained.
- Do not place objects on top of the appliance which are magnetic, heavy or filled with water.
- If the supply cord is damaged, it must be replaced by authorised TECO service personal, service agent or similarly qualified persons in order to avoid a hazard.
- Do not store flammable, explosive, volatile and highly corrosive materials in the refrigerator. Containers with flammable gases or liquids can leak at low temperature. There is a risk of explosion or fire.

• Do not splash water on the appliance. It may cause malfunction or electric shock.
• Always switch off and unplug appliance before cleaning.
• This appliance is not intended for use by persons (including children) with reduced physical, sensory or mental capabilities, or lack of experience and knowledge, unless they have been given supervision or instruction concerning use of the appliance by a person responsible for their safety.
• WARNING: Keep ventilation openings, in the appliance enclosure or in the built-in structure, clear of obstruction.
• WARNING: Do not use mechanical devices or other means to accelerate the defrosting process, other than those recommended by the manufacturer.
• WARNING: Do not damage the refrigerant circuit.
• WARNING: Do not use electrical appliances inside the food storage compartments of the appliance.
• For appliances which use flammable insulation blowing gases, Please keep the products away from the fire or similar glowing substance before you dispose of the refrigerator.
• This appliance is intended to be used in household and similar applications such as:
- staff kitchen areas in shops, offices and other working environments;
- farm houses and by clients in hotels, motels and other residential type environments;
- bed and breakfast type environments;
- catering and similar non-retail applications.



WARNING

Safety of children

• Young children should be supervised to ensure that they do not play with the appliance.
• Packing (e.g. wraps, polystyrene etc.) can be dangerous for children. There is a risk of suffocation. Keep packaging materials away from children.
• Contact your local authorities for correct method of disposal. Dispose of all packaging in a responsible manner in accordance with local regulations.

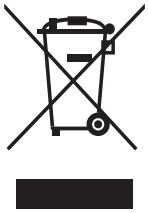

Dispose of old appliances in accordance with local regulations. Remove the doors, cut off the main cable, break or remove spring or bolt catches if fixed to prevent children getting trapped or involve themselves in other dangers.

NAME OF PARTS AND USAGE

TFF210WNTAM / TFF210SNTAM

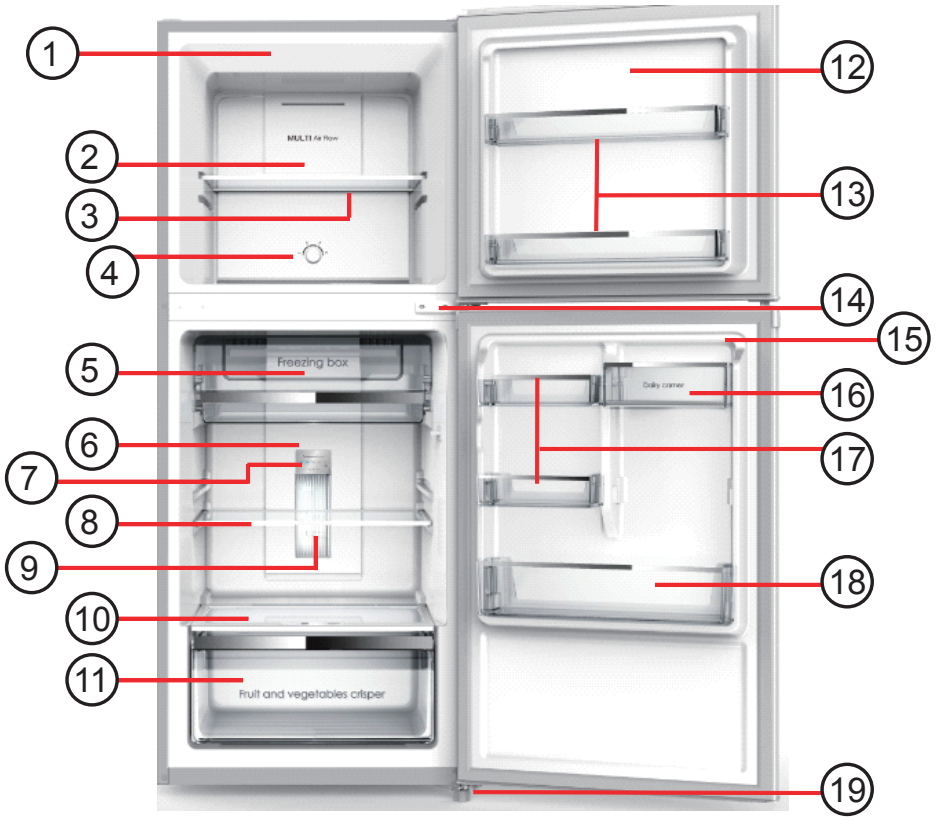

1. Cabinet
2. Freezer Air Duct
3. Freezer Glass Shelf
4. Freezer Vent Adjustment
5. Cold Compartment
6. Refrigerator Air Duct
7. Refrigerator Control Panel
8. Refrigerator Glass Shelf
9. LED Internal Light
10. Vegetable Crisper Glass Shelf
11. Vegetable Crisper
12. Freezer Door
13. Freezer Door Rack
14. Middle Hinge
15. Refrigerator Door
16. Refrigerator Door Dairy Rack
17. Small Refrigerator Door Rack
18. Large Refrigerator Door Rack
19. Bottom Hinge

- The refrigerator you purchased is subject to continuous improvement, which may not be completely consistent with the manual, however, the functions and operating methods will not change.
- If you use the refrigerator for the first time, remove the adhesive tapes from all surfaces, drawers, shelves, trays, etc.
- Do not pull or push the vegetable crisper or shelves forcefully during use as this may result in damage to the appliance.

NAME OF PARTS AND USAGE

TFF240WNTAM / TFF240SNTAM

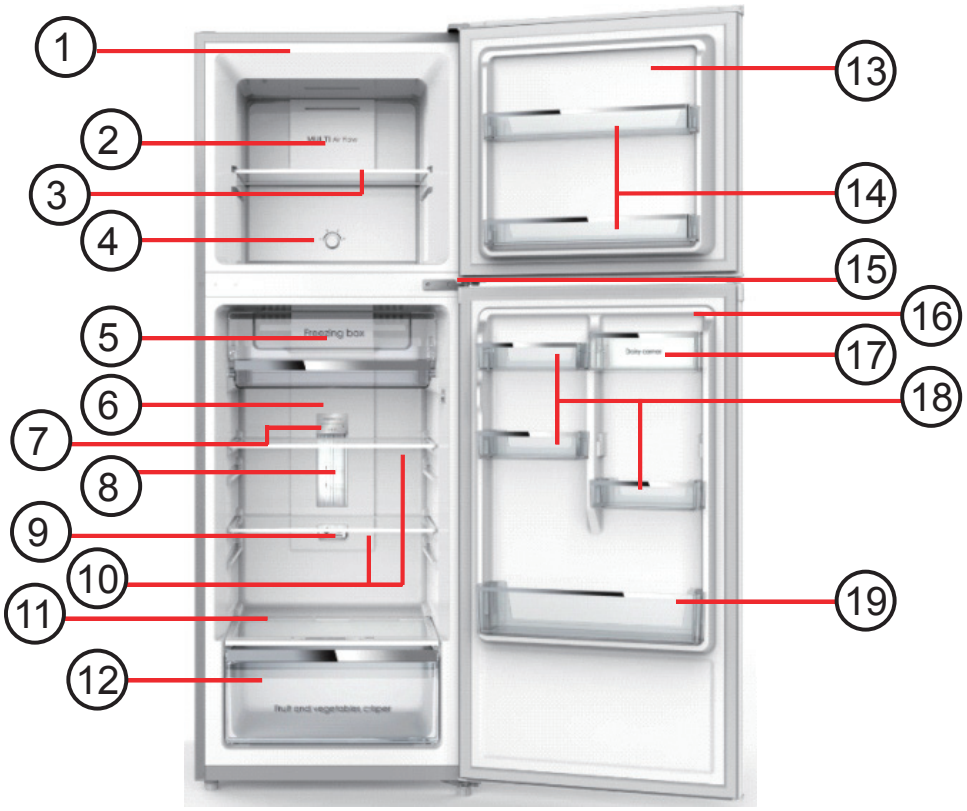

1. Cabinet
2. Freezer Air Duct
3. Freezer Glass Shelf
4. Freezer Vent Adjustment
5. Cold Compartment
6. Refrigerator Air Duct
7. Refrigerator Control Panel
8. LED Internal Light
9. Preservation Light*
10. Refrigerator Glass Shelf
11. Vegetable Crisper Glass Shelf
12. Vegetable Crisper
13. Freezer Door
14. Freezer Door Rack
15. Middle Hinge
16. Refrigerator Door
17. Refrigerator Door Dairy Rack
18. Small Refrigerator Door Rack
19. Large Refrigerator Door Rack

*The **Preservation Light** utilizes light waves to stimulate the photosynthesis effect of fresh fruit and vegetables within the refrigerator. This assists fruit and vegetables to stay fresh for longer.
NOTE: Not available in TFF210WNTAM & TFF210SNTAM models.

NAME OF PARTS AND USAGE

TFF270WNTAM / TFF270SNTAM

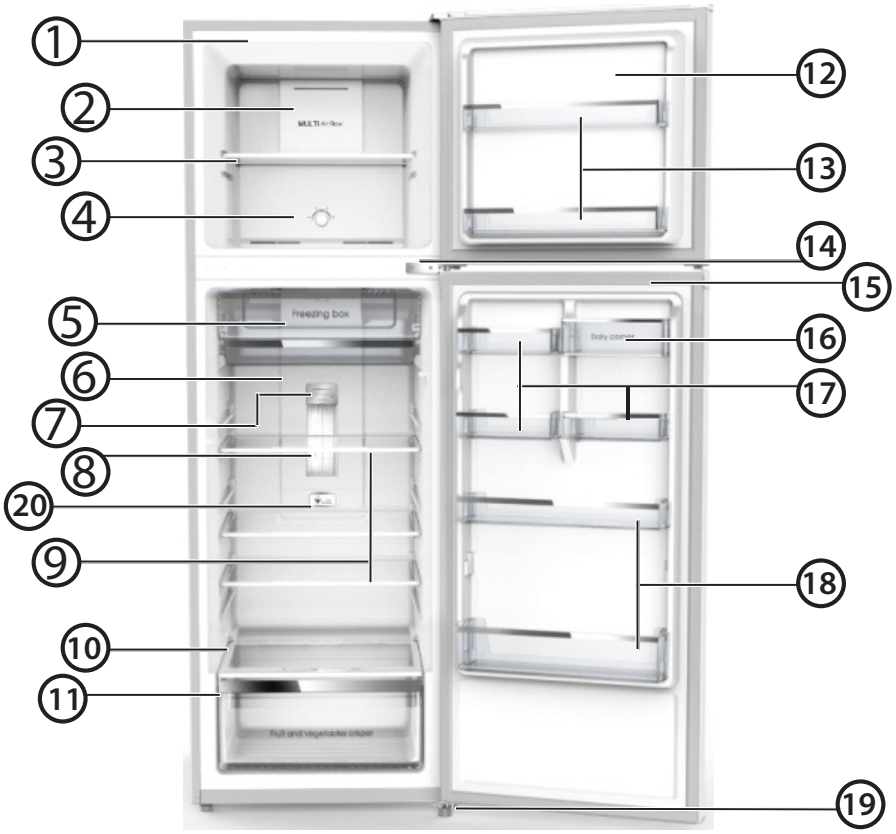

1. Cabinet
2. Freezer Air Duct
3. Freezer Glass Shelf
4. Freezer Vent Adjustment
5. Cold Compartment
6. Refrigerator Air Duct
7. Refrigerator Control Panel
8. LED Internal Light
9. Refrigerator Glass Shelf
10. Vegetable Crisper Glass Shelf
11. Vegetable Crisper
12. Freezer Door
13. Freezer Door Rack
14. Middle Hinge
15. Refrigerator Door
16. Refrigerator Door Rack
17. Small Refrigerator Door Rack
18. Large Refrigerator Door Rack
19. Bottom Hinge
20. Preservation Light*

*The **Preservation Light** utilizes light waves to stimulate the photosynthesis effect of fresh fruit and vegetables within the refrigerator. This assists fruit and vegetables to stay fresh for longer.
NOTE: Not available in TFF210WNTAM & TFF210SNTAM models.

PACKING LIST

Check the packing list that all items have been included.

Part No.	Item	
1	Portable Twist Ice Cube Maker	1 Piece
2	Top Hinge Cover	1 Piece
3	Warranty Information Sheet	1 Copy
4	User's Manual	1 Copy

Note: Product specifications are subject to change without prior notice.

TRANSPORTING THE APPLIANCE & INSTALLATION

- The appliance must be transported only in a vertical position. The packing must be intact during the transportation.

- When unpacking and re-packing the appliance, please memorise the position of each accessory of the appliance when unpacking it. When re-packing the appliance for transportation, ensure all accessories are secured before transportation.

- Do not lift or pull the doors during transportation.

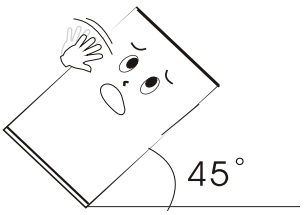

- When moving the appliance, do not tilt >45 degrees (the angle of the vertical direction). Please avoid strong vibration and impacts that could cause damage to the appliance.

- The refrigerator should be located on a firm and flat surface. An uneven surface may cause excess operating noise or vibration.
  - (a) The noise may be increased if the floor is not firm.
  - (b) If the appliance is to be positioned on carpet flooring and heat emitted from the appliance is a concern, place a solid sheet under the appliance.

- Choose a location which is not exposed to sunlight, high temperature or humid, as humidity may cause staining or damage.

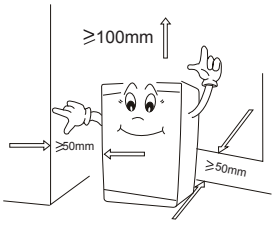

- It is recommended a clearance of at least 50mm away from objects and walls on both sides and back. Ensure the clearance above the appliance is not less than 100mm and 160° clear for the doors to swing open.

- If the appliance is unstable, rotating either of the front two legs in a clockwise direction will raise the appliance.

- When adjusting the front legs, ensure the appliance slopes backwards slightly to keep the door closed.

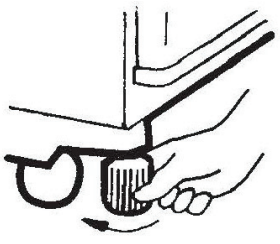

- Remove all internal packaging before operating.

OPERATING INSTRUCTIONS

Before first use, let the refrigerator stand for 2 hours before connecting the power. Leave 4 to 5 hours after connecting power before placing fresh or frozen food into the refrigerator.

PLACEMENT OF FOOD

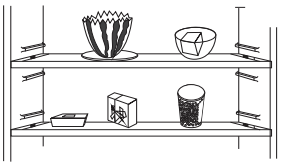

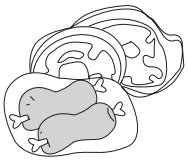

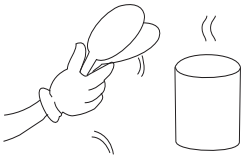

- There should always be some space between items inside for air circulation.
- Food should be kept in sealed packaging to avoid becoming dry or spoilt.
- Hot food should be cooled down before placing into the appliance. Otherwise, the interior temperature and power consumption will increase.
- Reduce opening the door frequently. This will increase the appliance efficiency and reduce power consumption.

WARNING

Do not use any electronic equipment inside the appliance.
Do not store objects which are costly or subject to temperature variations. e.g. medication or chemicals.
Do not adjust shelving once food has been placed on them.

TEMP. SETTINGS

Controlling the temperature of the refrigerator compartment can be set by the control panel. Refer to item 7 on Pages 6, 7 or 8.

Refrigerator Temperature Controls:
1) Temp. Setting 1 - LED1 (Warmest)
2) Temp. Setting 2 - LED2
3) Temp. Setting 3 - LED3
4) Temp. Setting 4 - LED4
5) Temp. Setting 5 - LED5 (Coldest)

Buttons:
A) SET Button

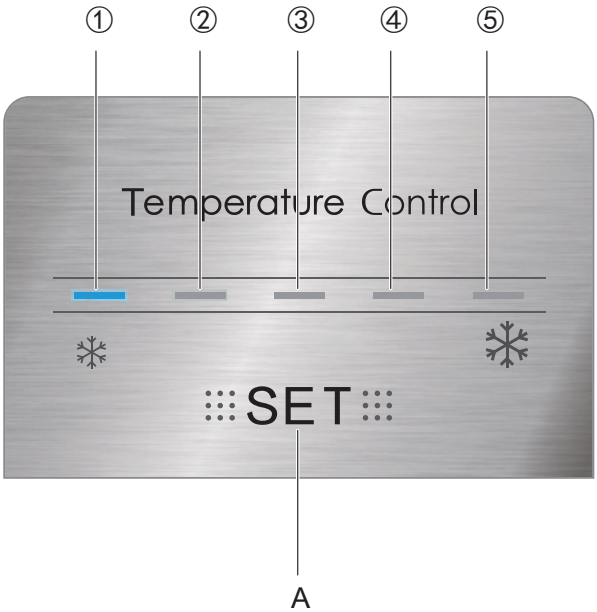

LED DISPLAY

When the refrigerator is rst powered on, for three (3) seconds the display will show all temp. indicators and then display the current temp. setting. This display will also be used to display error codes if a fault should occur (refer to Page 18).

REFRIGERATOR TEMP. SETTING

Locate the temp. control panel (refer to item 7 on Page 6 - 8) and repeatedly press the SET Button (refer to Button A on Page 11) to cycle through the ve temp. settings. Each press of the SET Button (A) will increase the temp. setting by one (1). When the maximum temp. setting has been reached, pressing the SET Button again, will return the temp. setting to the minimum setting (Temp. Setting 1).

FREEZER TEMP. SETTING

Locate the Freezer Temp. control at the rear of the freezer section. Turn the dial to adjust the temp. setting between COLD (minimum) and COLDEST (maximum).

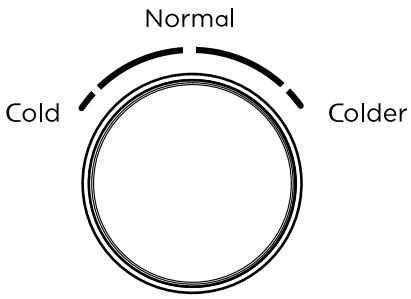

ICE MAKING

To make ice cubes, ll the Portable Twist Ice Maker (refer to item 1 on Page 9) using a measuring cup (not supplied) with clean drinking water and place in the freezer section.

To remove the cubes from the tray, push the button on the side of the Portable Twist Ice Maker to invert the tray. The ice cubes will fall into the container below. Be careful opening and closing the freezer door until the ice cubes are completely frozen to avoid spilling water.

ENERGY SAVING TIPS

Adjust the temperature control to a setting that is acceptable for the storage of the food. This will reduce the power consumption.

Only open the door when required and ensure all doors are closed securely. Frequently opening or doors left open will increase power consumption. To maintain good air circulation, keep the shelves and crisper of the refrigerator as supplied, and do not block air outlets.

REVERSING THE DOOR

Follow these steps to reverse the door from the supplied position. Before proceeding, ensure the appliance is unplugged, turned off and empty of all contents.

STEP 1. Top Hinge

A) Locate and remove the top hinge cover, screws and hinge from the right side.

B) Remove the screw hole cover from the left side in preparation.

C) Remove the top hinge and lift the door upward off the middle hinge. Place the door in a safe location to avoid damage.

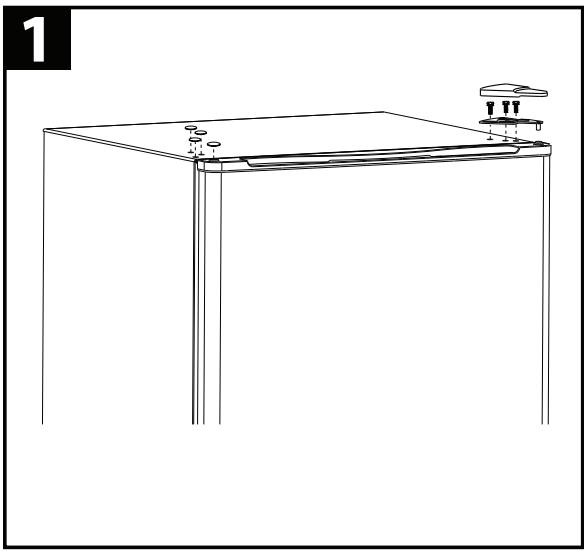

STEP 2. Middle Hinge

A) Once the door has been placed aside carefully, unscrew and remove the right middle hinge.

B) Lift the door off the bottom hinge. Place the door in a safe place to avoid damage.

C) Relocate the hinge to the left side. Take the two screws from A) and fasten the left middle hinge in place. Before proceeding to STEP 3, to access the bottom hinge, the appliance will need to be tilted backward. Do not tilt >45° or lay flat as this may damage the refrigeration system. Lean the appliance back on a solid object or have someone hold the appliance as the bottom hinge is accessed.

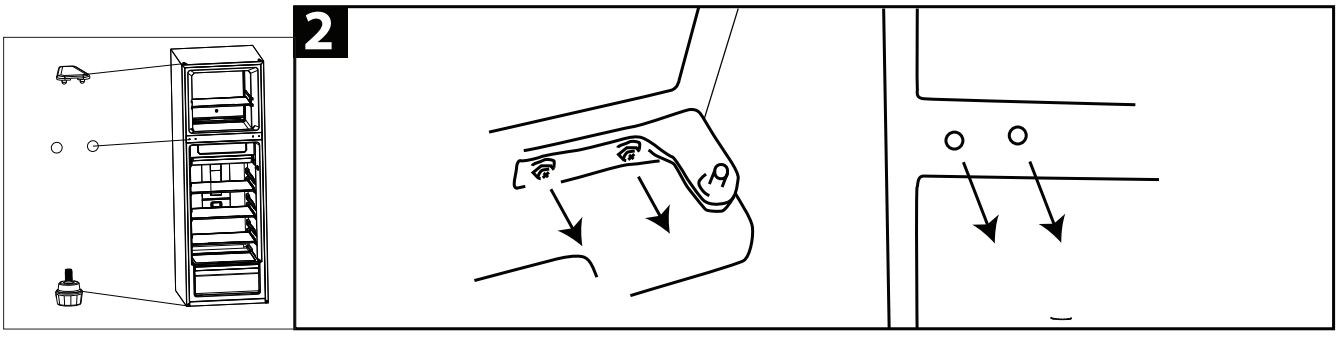

STEP 3. Bottom Hinge

A) Remove both adjustable feet by completely unscrewing them.

B) Remove the screws holding the bottom hinge and remove the bottom hinge.

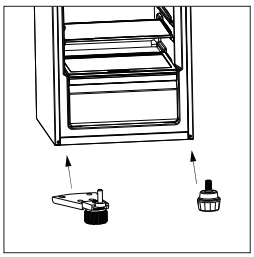

STEP 4.

A) Screw the adjustable foot into the right side.

B) Fasten the bottom hinge into place on the left side.

NOTE: Do not fasten completely until after the door has been correctly positioned. Allow for minor adjustment and gasket seal.

C) At the bottom of the door, remove the hinge assembly and fasten the door stop and hinge assembly by screwing into place.

D) Place the freezer door onto the bottom hinge.

STEP 5.

A) Place the top hinge into position on the left side.

B) Fasten the top hinge and ensure the door gasket seals correctly.

C) Align the door in place, ensure it can open/close without obstruction and securely seals.

D) Tighten the hinge screws for both top, middle and bottom hinges.

E) Replace the top hinge cover (refer to item 2 on Page 7) and clip in place.

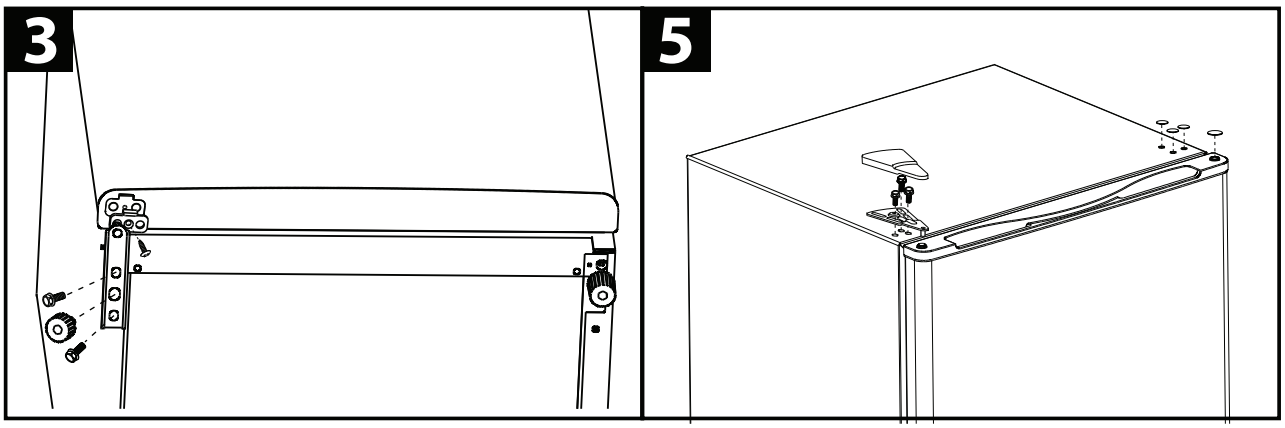

MAINTENANCE

The appliance should be maintained and cleaned frequently. For your safety, unplug the appliance from the mains power source before performing any maintenance.

1.Interior and exterior maintenance

- Clean the interior of the appliance with clean water and wipe it dry with a piece of dry cloth.
- Cleansers such as soap powder, abrasive cleaning powder, alkali cleansers, chemical cloth, thinners, alcohol, acid petroleum products and hot water should not be used to clean the refrigerator as they may damage the painted cover and plastics.

2. Smearing can age the interior plastic components, so remove it as soon as possible.

3. Wipe the door gasket clean, it is easy to damage the door gaskets if polluted by stains, e.g. oil, sauce, etc.

4. Interior light
   The refrigerator is fitted with several LED internal lights, that are not replaceable. If the lights stop working, please contact TECO Service (refer to page 21).

5. Empty the drip tray
   Do not attempt to remove the drip tray from the rear of the refrigerator. Be careful not to bump the refrigeration tubing. The tray may have water in it, be careful not to spill it while removing any water in the tray. This should be carried out at least once a year. Use a sponge or towel to soak up the water from the drip tray into a bucket. Discard the water appropriately.

6. Please check the points below after maintenance:
   1) Is there any damage or loss of the power lead?
   2) Can the power plug be inserted into the power socket correctly?
   3) Is the power plug and/or lead heating up?

COMPARTMENT, CRISPER & RACK MAINTENANCE

Please be careful when handling and removing compartment, crisper and racks. Follow the steps below to remove, clean and replace each of the refrigerator items.

GLASS SHELVES & DOOR RACKS

To remove glass shelves for cleaning, pull the shelf out as far as possible and then lift slightly. The shelf should lift away easily. (Refer to Fig. 1).
Clean the shelf completely, allow to dry before replacing.
To remove the door racks, grasp the rack with both hands and gently lift. Once removed, clean and allow to dry before replacing. (Refer to Fig. 2).

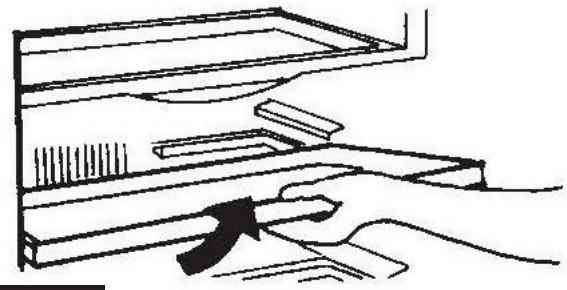

Fig. 1

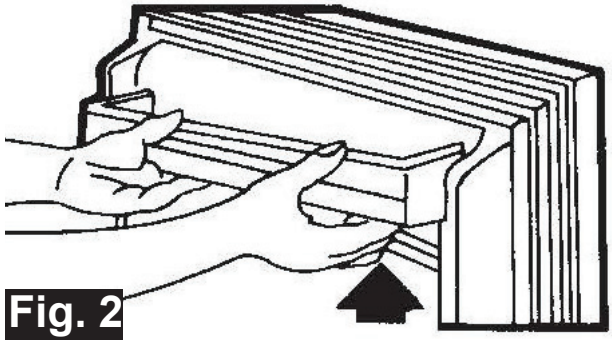

Fig. 2

VEGETABLE CRISPER, DRAWERS

To remove the vegetable crisper, gently slide the crisper out.
Refer to Fig. 3.

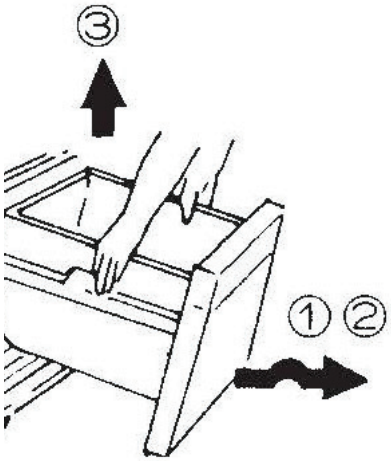

Fig. 3

DISCONNECTION OF THE APPLIANCE

If a power failure occurs, even in summer, the refrigerator could store food normally for some time.

1, Power failure

During a power failure, do not put additional food in the appliance and reduce opening the door frequently.

Place several ice cubes into a container if power failure is anticipated beforehand, and place it in the top of the fridge.

2, Power failure during vacation

Before departure of a short vacation, remove any items that could spoil if a power failure occurs. Ensure the door is closed firmly.

If going on a long vacation, remove all items, clean and wipe dry the internal of the appliance, prior to disconnecting the power and leave the door open.

3, Storage of appliance

If the refrigerator will be stopped for a long period of time (storage), remove all items, clean and wipe dry the internal of the appliance, unplug the appliance from the power outlet. The door should be kept open in order to prevent unpleasant odours.

Unplugging the appliance from the power outlet, please leave at least 5 minutes before reconnection.

TROUBLESHOOTING

The following cases are not malfunctions:

1. Moisture may form as condensation on the outside of the appliance during humid conditions. To remove excess moisture, wipe clean.
2. The flow of refrigerant through the pipeline coil could cause gurgling, similar to water boiling. This is the normal function of the appliance.
3. It is normal that the sides of the appliance will get warm as a result of the refrigeration system operation.
4. The appliance operation could cause electrical interference to electrical equipment.

SYMPTOM: The refrigerator does not work.
SUGGESTION: It may not be connected to the power supply (plug, power failure or blown fuse) and switched on. Check that the temperature dial is not set to the minimum position.

SYMPTOM: The refrigerator does not work efficiently as expected.
SUGGESTION: It may be caused by heavy frost, warm temperature setting, frequently opening the door or low voltage.

SYMPTOM: It makes an unusual noise.
SUGGESTION: It may be caused by an unbalanced appliance or unstable surface, bottles are incorrectly placed and rattling, vibration from an object on top of, behind or beside the appliance.

SYMPTOM: The compressor keeps working for a long period.
SUGGESTION: The environment temperature may be too high. The doors may be opened frequently or they are left open. The temperature setting may increase the working time of the compressor. Large amounts of warm food recently placed in the appliance may also cause this symptom.

SYMPTOM: Unpleasant odours.
SUGGESTION: Interior may need cleaning. Some foods produce strong odours, some containers can also cause odours. Food should be packed tightly before being placed inside the appliance. Check if any food has spoilt in the appliance.

SYMPTOM: Heavy frost occurs in the freezer compartment.
SUGGESTION: Make sure the door is correctly closed and the seal is not obstructed.

SYMPTOM: Refrigerator temperature is too cold.
SUGGESTION: Check the position of the temperature dial.

ERROR CODES
Refer to the Refrigerator Temp. Indicators on Page 11

DISPLAY	DESCRIPTION
LED1 & 2 on	Freezer temp. sensor error
LED1 & 3 on	Freezer defrost sensor error
LED1 & 4 on	Ambient temp. sensor error

SPECIFICATIONS

Model Number		TFF210WNTAM TFF210SNTAM	TFF240WNTAM TFF240SNTAM	TFF270WNTAM TFF270SNTAM
Climate Class		T	T	T
Classification of Installation and Use		Group 5T Indoor Use Only	Group 5T Indoor Use Only	Group 5T Indoor Use Only
Rated Total Gross Volume (L)	Fridge	140	172	201
	Freezer	67	67	67
Rated Total Storage Volume (L)	Fridge	138	168	198
	Freezer	54	54	54
Voltage	V	220-240	220-240	220-240
Frequency	Hz	50	50	50
Noise Level	dB	42	42	42
Refrigerant Type		R600a	R600a	R600a
Ambient Operating Temperature	°C	43	43	43
Dimensions (mm)	Height	1372	1522	1557
	Width	545	545	545
	Depth	623	623	623
IP Rating		IPX0	IPX0	IPX0
Net Weight	Kg	48	51	55

Note: Product specifications are subject to change without prior notice. For full specification information, please refer to the rating plate attached to the appliance.

Did you know?
TECO Australia's product range also includes:

- ♦ Top Load Clothes Washers
- ♦ Front Load Clothes Washers
- ♦ Twin Tub Clothes Washers
- ♦ Auto Sensing Condenser and Vented Clothes Dryers
- ♦ Refrigerators
- ♦ Chest and Vertical Freezers
- ♦ Bar Fridges
- ♦ Dehumidifiers
- ♦ Televisions
- ♦ Air Curtains and Air Conditioners

Visit **www.teco.com.au** for our full range.

REPAIRS, SERVICE & WARRANTY

It is hazardous for anyone installing, removing, altering, repairing, servicing, testing or certifying the gas system of a gas device (i.e. charging, discharging or breaking into the refrigeration system that uses hydrocarbon refrigerants).

Only an Authorised Service Person can carry out servicing or repairs to this appliance. In Queensland the authorised person must hold a Gas Work Authorisation for hydrocarbon refrigerants, before carrying out servicing or repairs which involve the removal of covers.

Individuals will need to hold appropriate refrigeration/air conditioning competencies and also training in hydrocarbon refrigerants. This type of authorisation is provided to individuals only.

IF SERVICE IS REQUIRED:
If you have a problem, and the problem persists after you have made the checks mentioned in this manual, contact:
TECO Australia's Service on 1300 660 037 (8:30am-4pm Mon~Fri AEST)
Service Email had.service@teco.com.au Spare Parts had.parts@teco.com.au
For warranty details please visit www.teco.com.au

WARRANTY INFORMATION

Teco's warranty information for the product purchased is available at www.teco.com.au.
A copy of the warranty may also be obtained by contacting Teco's Warranty and Service Department on 1300 660 037 during business hours (Mon - Fri 8.30am – 4pm AEST).

To arrange for servicing of a Teco product, please contact our Warranty and Service Department on 1300 660 037 during business hours (Mon - Fri 8.30am – 4pm AEST).

To assist in processing any warranty claim that you may have Teco recommends that you:

1. Complete the following information in relation to your purchase:

   Name of retailer: _____

   Name of owner: _____

   Date of purchase: _____

   Model No. : _____

   Serial No. : _____

   MFG code: _____

2. Retain proof of your purchase for any warranty claim. Ideally this proof of purchase will be the tax invoice issued for your purchase.

3. Complete the following information in relation to the person that installed your Teco appliance (if applicable):

   Installer's name: _____

   Telephone No.: _____

   Licence No.: _____