STANLEY
Infrastructure

Safety, Operation & Maintenance

HD45 Hydraulic Hammer Drill

66301 User Manual 12/2018 Ver. 18

DECLARATION OF CONFORMITY
ÜBEREINSTIMMUNGS-ERKLARUNG
DECLARATION DE CONFORMITE CEE
DECLARACION DE CONFORMIDAD
DICHIARAZIONE DI CONFORMITA

STANLEY
Infrastructure
CE

I, the undersigned:
Ich, der Unterzeichnende:
Je soussigné:
El abajo firmante:
Io sottoscritto:

Nuerenberg, David

Surname and First names/Familiennname und Vornamen/Nom et prénom/Nombre y apellido/Cognome e nome

hereby declare that the equipment specified hereunder:
bestätige hiermit, daß erklaren Produkt genannten Werk oder Gerät:
déclare que l'équipement visé ci-dessous:
Por la presente declaro que el equipo se especifica a continuación:
Dichiaro che le apparecchiature specificate di seguito:

1. Category:
   Kategorie:
   Catégorie:
   Categoria:
   Categoria:
   Hammer Drill, Hydraulic
2. Make/Marke/Marque/Marca/Marca **STANLEY**
3. Type/Typ/Type/Tipo/Tipo: **HD4511001, HD4531001, HD4511001B**
4. Serial number of equipment:
   Seriennummer des Geräts:
   Numéro de série de l'équipement:
   Numero de serie del equipo:
   Matricola dell´attrezzatura:
   All

Has been manufactured in conformity with
Wurde hergestellt in Übereinstimmung mit
Est fabriqué conformément
Ha sido fabricado de acuerdo con
E' stata costruita in conformitá con

Directive/Standards Richtlinie/Standards Directives/Normes Directriz/Los Normas Direttiva/Norme	No. Nr Numéro No n.	Approved body Prüfung durch Organisme agréé Aprobado Collaudato
EN ISO	28927-10	Self
EN ISO	3744 (15744)	Self
EN ISO	11148-5, Cl. 5.5	Self
EN ISO	13732-1	Self
Machinery Directive	2006/42/EC	Self

5. Special Provisions: **None**
   Spezielle Bestimmungen:
   Dispositions particulières:
   Provisiones especiales:
   Disposizioni speciali:

6. Representative in the Union: **Patrick Vervier**, **Stanley Dubuis 17-19, rue Jules Berthonneau-BP 3406 41034 Blois Cedex, France.**
   Vertreter in der Union/Représentant dans l'union/Representante en la Union/Rappresentante presso l'Unione

Done at/Ort/Fait à/Dado en/Fatto a STANLEY Infrastructure, Milwaukie, Oregon USA Date/Datum/le/Fecha/Data 1-4-11

Signature/Unterschrift/Signature/Firma/Firma

Position/Position/Fonction/Cargo/Posizione North America Quality Manager

A

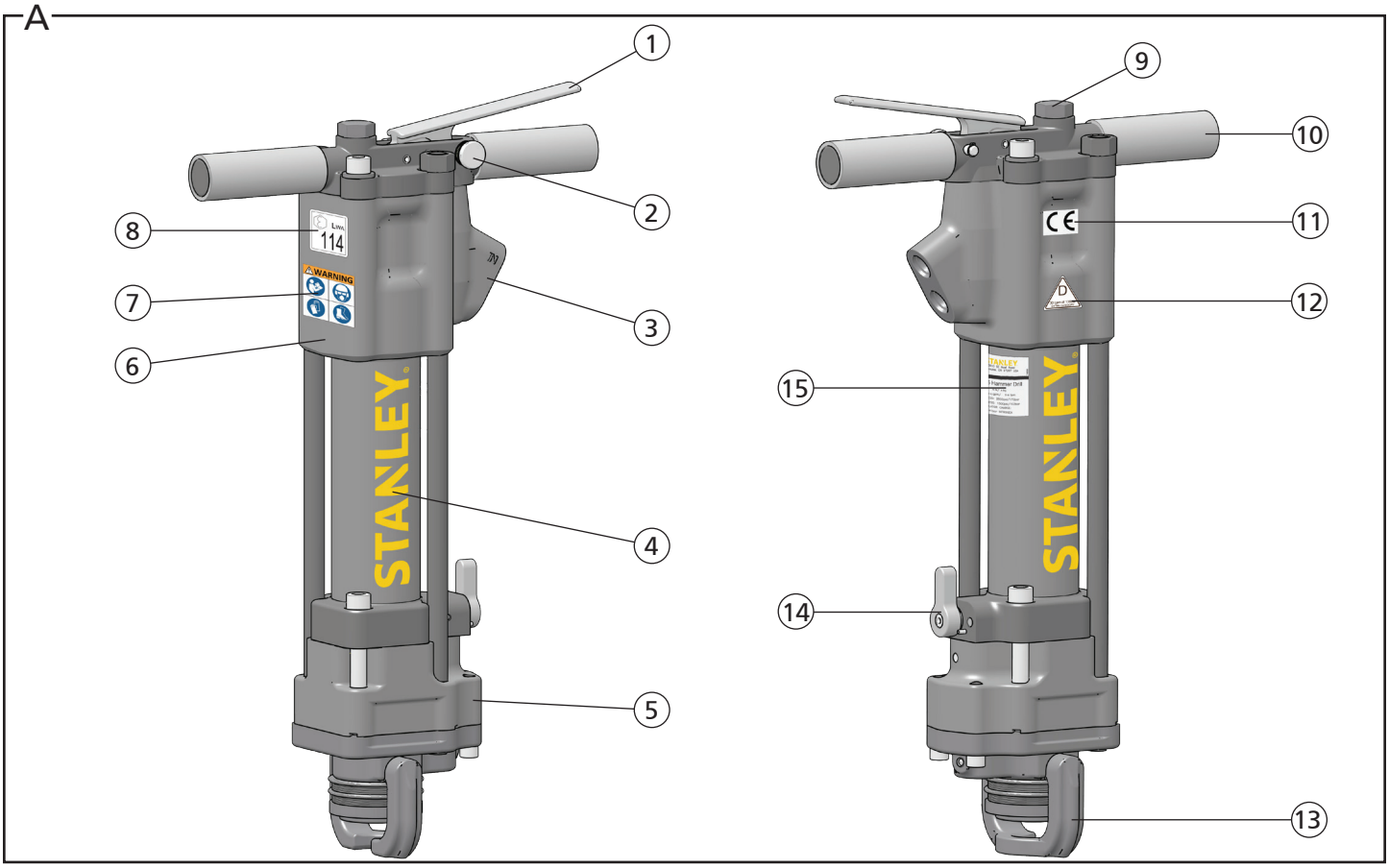
1
2
3
4
5
6
7
8
9
10
11
12
13
14
15
STANLEY
WARNING
CE

B

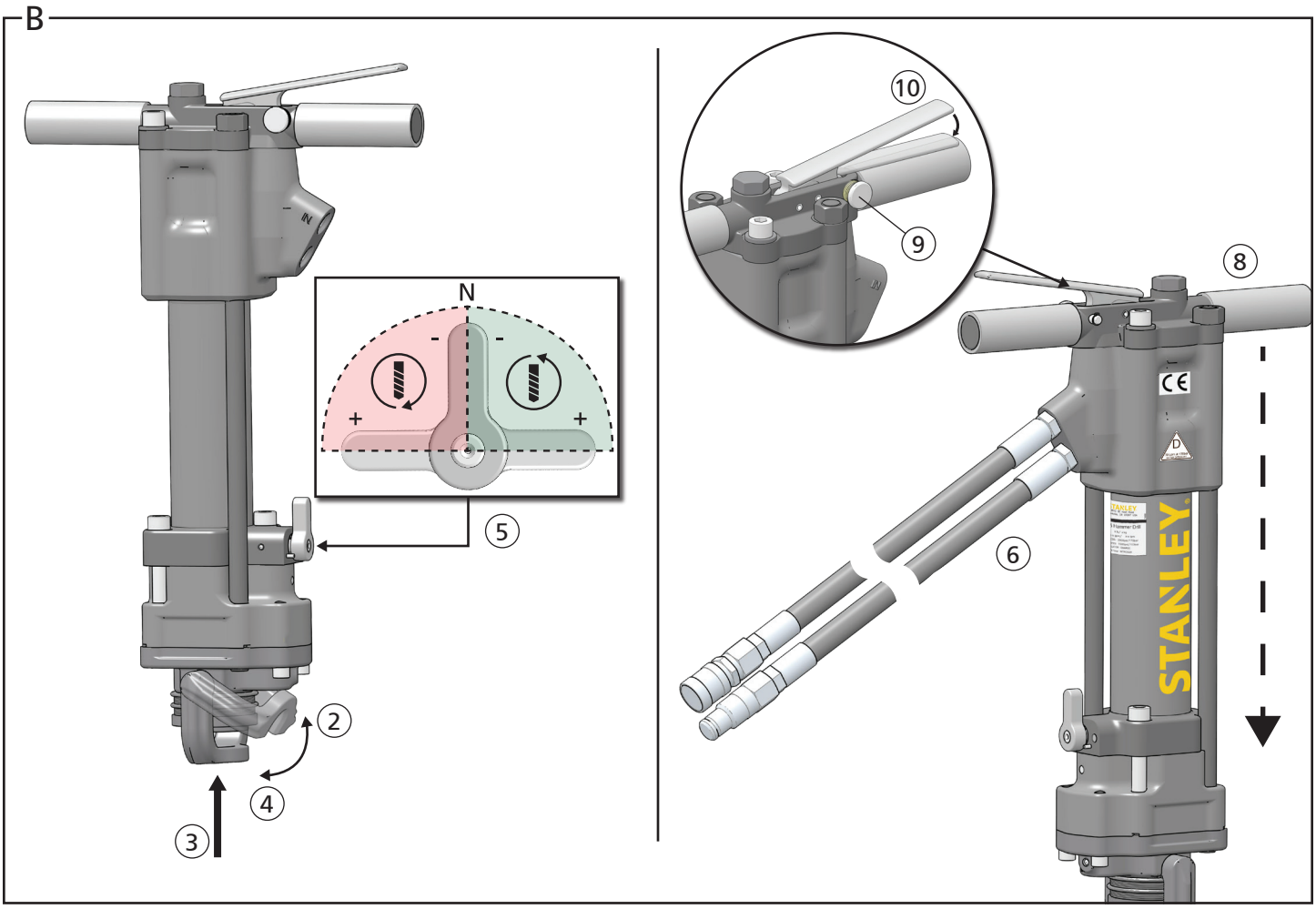
N
+
-
2
3
4
5
6
8
9
10
STANLEY
CE

C

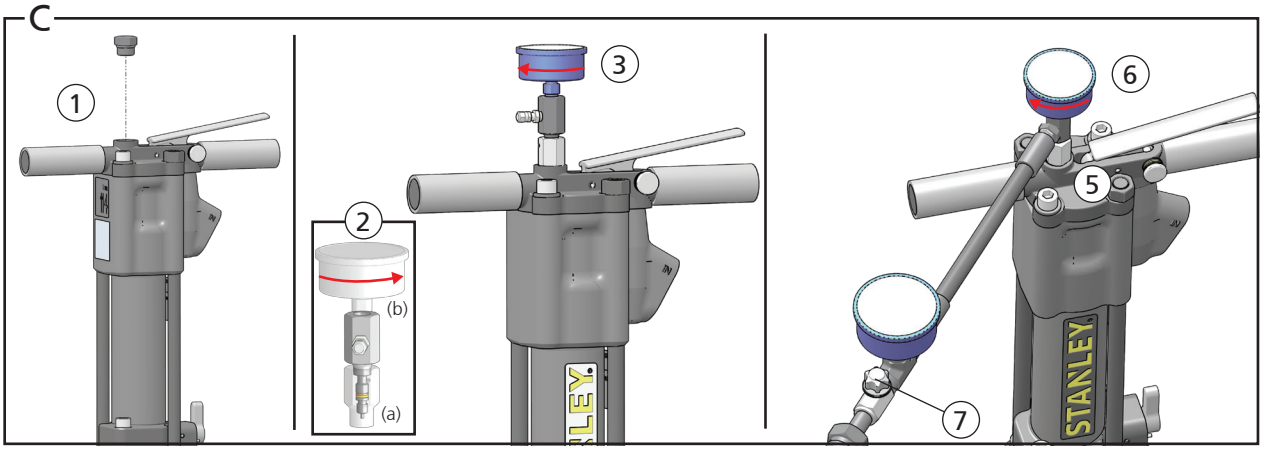

D

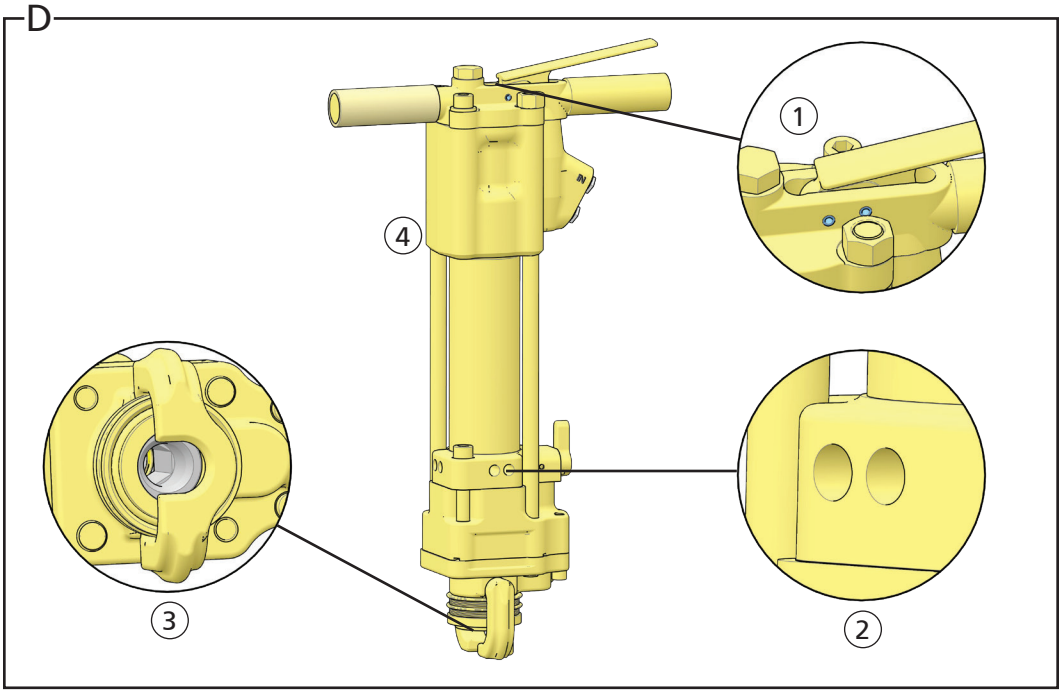

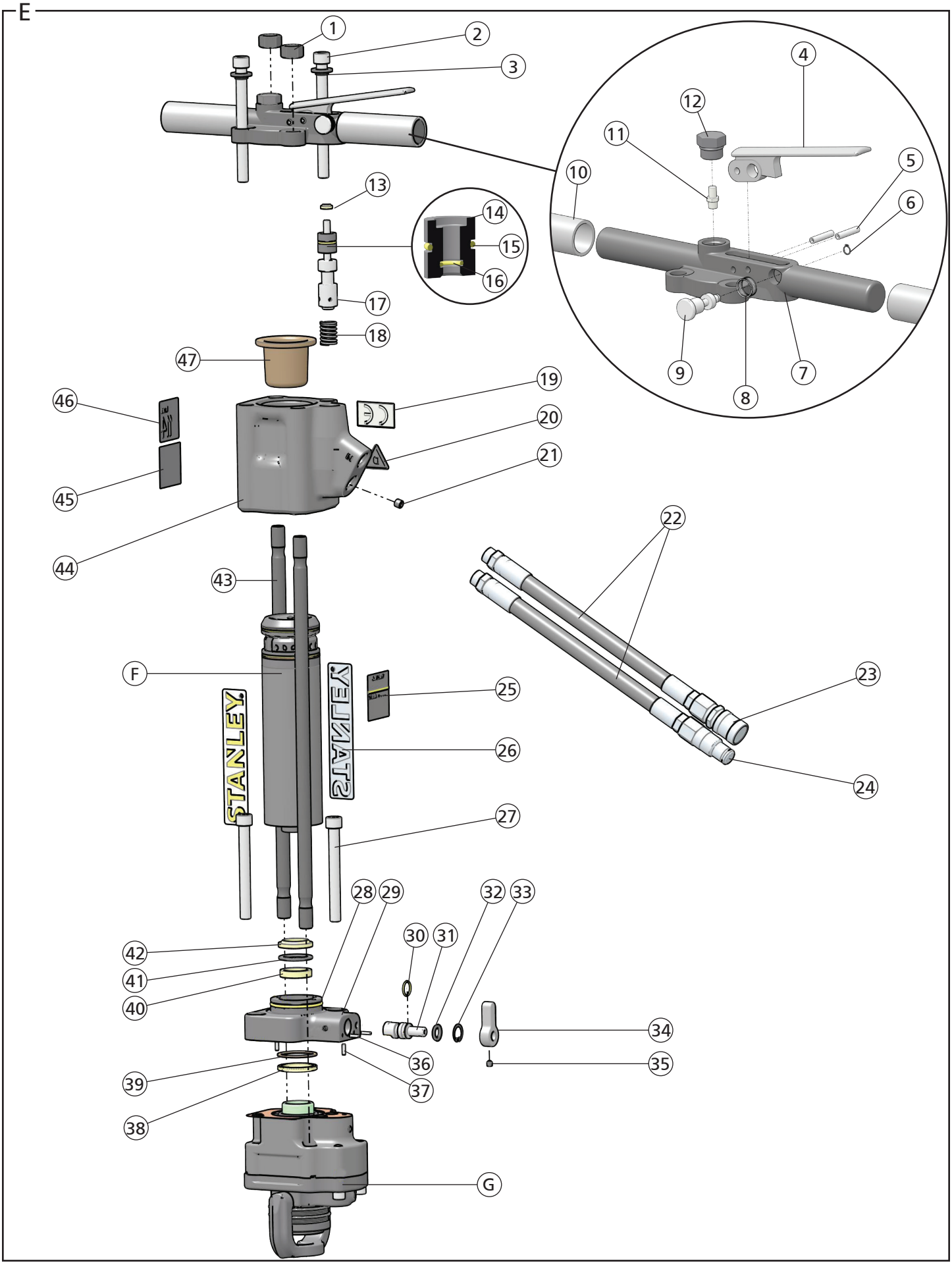
E
1
2
3
4
5
6
7
8
9
10
11
12
13
14
15
16
17
18
19
20
21
22
23
24
25
26
27
28
29
30
31
32
33
34
35
36
37
38
39
40
41
42
43
44
45
46
47
F
G
STANLEY
STANLEY

F

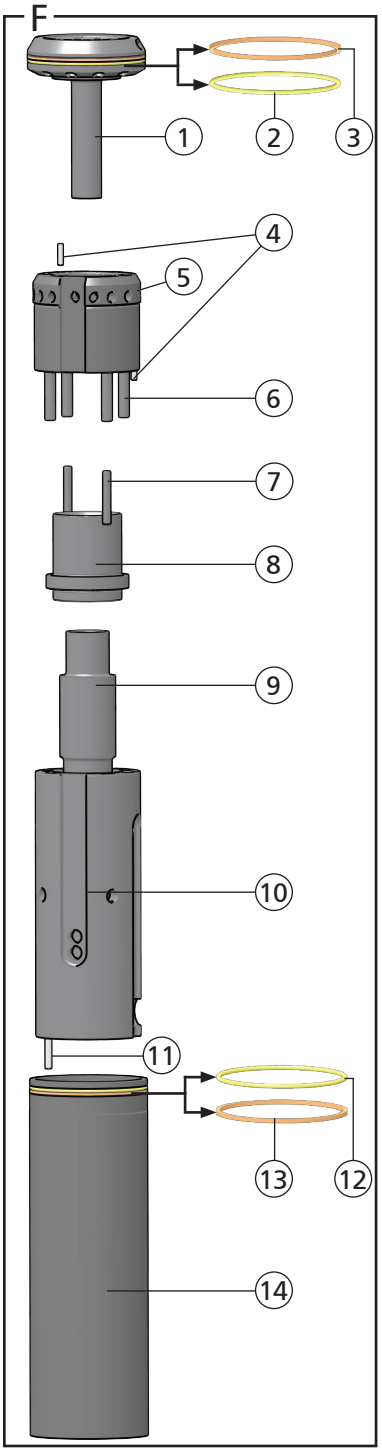
1
2
3
4
5
6
7
8
9
10
11
12
13
14

G

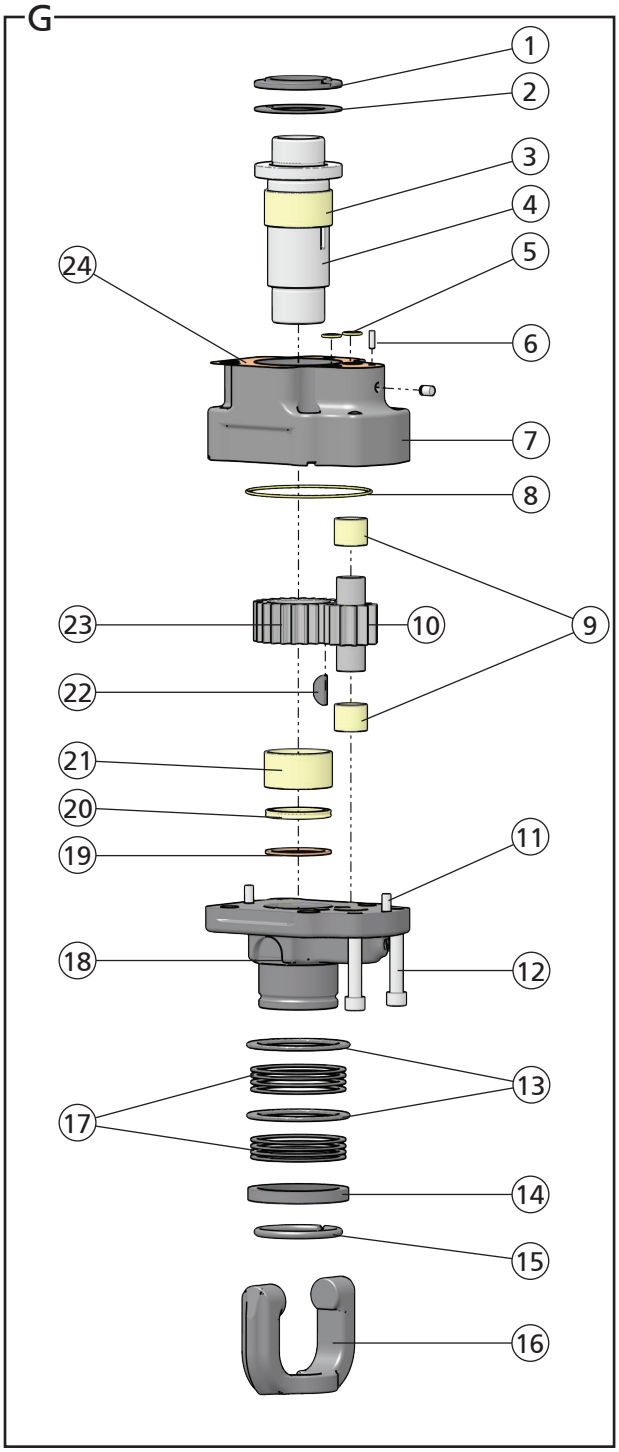
1
2
3
4
5
6
7
8
9
10
11
12
13
14
15
16
17
18
19
20
21
22
23
24

HD45 Parts Illustration - Detail E		
ITEM	P/N	DESCRIPTION
1	04374	Lock Nut
2	04372	Capscrew
3	25534	Washer
4	04371	Trigger
5	07492	Spirol Pin
6	00224	Retaining Ring
7	07483	Handle
	11358	Handle (HD4511001 & HD4531001)
8	07593	Spring
9	07594	Trigger Lock (HD4511001, HD4531001)
10	02494	Handle
11	20499	Charge Valve
12	07493	Charge Plug
13	04056	Rod Wiper*
14	04057	Bushing
15	00293	O-ring*
16	01362	O-ring*
17	04077	Valve Spool
18	04058	Spring
19	28322	CE Decal (HD4511001 & HD4531001)
	09612	General Caution Decal (HD45110B, HD45110D, HD46310)
20	11207	Circuit Type "D" Decal (HD4511001, HD4531001)
21	05243	Orifice Plug
22	01652	Hose Assembly
23	03972	Female Coupler
24	03973	Male Coupler
25	76649	Tool Name Tag (HD4511001, HD4531001)
26	74770	STANLEY Logo Decal
27	04936	Capscrew
28	02022	O-ring
29	04951	Drive Motor Control Block
	06680	Drive Motor Control Block (HD45310, HD4531001)
30	01211	O-ring*
31	04937	Motor Control Valve
32	04938	Washer
33	04940	Retaining Ring
34	04939	Lever
35	01607	Set Screw
36	02900	Roll Pin
37	01749	Roll Pin
38	11196	Quad Ring*
39	11197	Backup Ring*
40	04934	Cup Seal*
41	04780	Washer
42	04386	Cup Seal*
43	04932	Side Rod

HD45 Parts Illustration - Detail E		
ITEM	P/N	DESCRIPTION
44	05988	Accumulator Valve Block
45	28409	Composite Decal (HD4511001, HD4531001)
46	81443	Sound Power Level Decal (HD411001, HD4531001)
47	07479	Accumulator Diaphragm
G	30649	Motor Assembly
	30650	Motor Assembly (HD45310, HD4531001)
SK	05839	Seal Kit (*In seal kit)

HD45 Flow Sleeve Parts Illustration - Detail F		
ITEM	P/N	DESCRIPTION
1	04378	Porting Block
2	04379	O-ring*
3	04381	Backup Ring*
4	02900	Roll Pin
5	04380	Automatic Valve Body
6	04605	Push Pin
7	04571	Push Pin
8	04382	Automatic Valve
9	04954	Piston
10	04384	Flow Sleeve
11	00114	Roll Pin
12	04379	O-ring*
13	04381	Backup Ring*
14	04383	Flow Sleeve Tube

HD45 Motor Parts Illustration - Detail G		
ITEM	P/N	DESCRIPTION
1	04949	Thrust Backup Washer
2	04948	Thrust Washer
3	04947	Bushing
4	04944	Drive Hex
5	00018	O-ring*
6	01749	Roll Pin
7	05976	Motor Chamber
8	01257	O-ring*
9	03826	Bushing
10	04033	Idler Gear
11	00713	Dowel Pin
12	00682	Capscrew
13	04756	Latch Washer
14	04759	Spring Backup
15	04761	Retaining Ring
16	16445	Latch
17	07063	Wave Spring
18	04942	Motor Plate
19	11197	Backup Ring*
20	11196	Quad Ring*
21	04947	Bushing
22	04787	Woodruff Key

HD45 Motor Parts Illustration - Detail G		
ITEM	P/N	DESCRIPTION
23	05975	Drive Gear
	06678	Drive Hex (HD45310, HD4531001)
24	04950	Gasket*

Safety Precautions

	The Safety Alert Symbol alerts you to potential personal injury hazards. Obey all safety messages that follow to avoid possible injury or death.
DANGER	Indicates an imminently hazardous situation which will result in death or serious injury.
WARNING	Indicates a potentially hazardous situation which could result in death or serious injury
CAUTION	Indicates a potentially hazardous situation which could result in property damage.

Always observe safety symbols. They are included for your safety and for the protection of the tool.



WARNING: Read all safety warnings and instructions. Failure to follow warnings and instructions may result in tool damage and/or serious injury.

Warning: To reduce the risk of injury, read the instruction manual.

General

- Do not discard safety instructions. Give to the operator.
- This tool will provide dependable service if operated in accordance with the instructions given in this manual. Read and understand this manual and any stickers and tags attached to the tool and hoses before operation. Failure to do so could result in personal injury or equipment damage.
- Inspect the tool before each use and ensure all decals are legible. Contact STANLEY if replacements are needed.
- Establish a training program for all operators to ensure safe operation. Do not operate the tool unless thoroughly trained or under the supervision of an instructor. Keep out of the reach of children.
- Operators and maintenance personnel shall be able to physically handle the bulk, weight and power of the tool.
- Avoid unsuitable postures as these positions do not allow for counteracting of normal or unexpected movement of the tool, such as a sudden break of the tool bit.
- Do not operate a damaged, improperly adjusted, modified or incompletely assembled tool.
- Do not operate the tool in explosive atmospheres, such as in the presence of flammable liquids, gases or dust. Power tools create sparks which may ignite the dust or fumes.
- Provide adequate ventilation in closed areas when operating a gas or diesel hydraulic power source.
- Do not inspect, carry, clean, change accessories or perform maintenance on the tool while the power source is connected. Accidental engagement of the tool can cause serious injury.
- Ensure work piece is securely fixed. Be aware that failure of the work piece or accessories may generate high velocity projectiles.
- Stay alert, watch what you are doing and use common sense when operating a hydraulic tool. Do not operate this tool if you are tired or under the influence of drugs or alcohol. A moment of inattention while operating hydraulic tools may result in serious injury.
- Assess risks to others around you before operating the tool.
- During operation, do not contact mechanisms, accessories or hardware as they can become very hot or sharp; use your Personal Protection Equipment (PPE).
- Use and maintain the tool as stated in this manual. Misuse of the tool can cause serious injury. Do not modify the tool in any way.
- Supervising personnel should develop additional precautions relating to the specific work area and local safety regulations.
- Never operate the tool if you are unsure about the presence of underground utilities, such as electrical cables, gas pipes, etc. These can cause a hazard if damaged with the tool.
- The tool is not insulated against coming into contact with electric power. Use hose certified as non-conductive.
- Do not overreach. Maintain proper footing and balance at all times when using the tool.
- Slips, trips and falls are major causes of workplace injury. Be observant of hoses lying about the work area, as they can be a tripping hazard.
- Operators must start in a work area without bystanders and must assess the risks to bystanders.
- Operators must be familiar with all prohibited work areas such as excessive slopes and dangerous terrain conditions.
- Only use clean hydraulic fluid, filling equipment and lubricants that have been recommended by STANLEY.
- Ensure tools are working properly and safely by performing preventative maintenance (PM) procedures.
- Repair and service of this tool must only be performed by an authorized and certified dealer.
- Do not force the tool to do the work of a larger tool. Use the correct tool for your application.
- Use only hoses and hose couplings that are rated for a minimum working pressure of 2500 PSI (172 BAR).
- Keep hands away from rotating chuck or drill bits.
- In spite of the application of relevant safety regulations and the implementation of safety devices, certain residual risks cannot be avoided. These risks are: repetitive strain injury due to incorrect posture and risk of pinching fingers when changing tool bit or pressing trigger.

Dust and Fumes

- **WARNING:** Some dust created by power sanding, sawing, grinding, drilling, and other construction activities contains chemicals known to the State of California to cause cancer, birth defects or other reproductive harm. Some examples of these chemicals are:
    - Lead from lead-based paints,
    - crystalline silica from bricks and cement and other masonry products, and
    - arsenic and chromium from chemically-treated lumber.

  Your risk from these exposures varies, depending on how often you do this type of work. To reduce your exposure to these chemicals: work in a well ventilated area, and work with approved safety equipment, such as those dust masks that are specially designed to filter out microscopic particles.

  Protect yourself and those around you. Research and understand the materials you are grinding. Follow correct safety procedures and comply with all applicable national, state or provisional health and safety regulations relating to them, including, if appropriate arranging for the safe disposal of the materials by a qualified person.
- When dust or fumes are created, control them at the point of emission. Direct tool exhaust to minimize disturbance of dust.
- Use respiratory protection in accordance with employers instruction or as required by occupational health and safety regulations.
- Avoid prolonged contact with dust. Allowing dust to get into your mouth, eyes or lay on the skin may promote absorption of harmful chemicals.
- Select and replace tool bits as recommended in order to prevent an unnecessary increase in dust or fumes.
- Keep tool handles dry, clean and free from oil and grease. This will enable better control of the tool.
- Operate and maintain the tool as recommended in this manual to minimize dust.

PPE

- Always wear safety equipment such as impact resistant goggles, ear protection, head protection, breathing protection and safety shoes at all times when operating the tool.
- Hands may be exposed to hazards, impacts, cuts, abrasions and heat. Wear gloves.
- Wear a hardhat if performing overhead work.
- Use PPE that conforms to standards ANSI Z87.1 (Eye and Face Protection), ANSI Z89.1 (Head Protection), ANSI Z41.1 (Foot Protection) and ANSI S12.6 (S3.19) (Hearing Protection).
- Do not wear loose fitting clothing or jewelry when operating the tool. Entanglement, choking, scalping and laceration can occur if loose clothing, personal jewelry, neck wear, hair or gloves are not kept away

from the rotating tool and its accessories.



M003
Wear Ear
Protection



M004
Wear Eye
Protection



M016
Wear a Mask

Sound

- Exposure to high noise levels can cause permanent, disabling hearing loss and other problems, such as tinnitus (ringing, buzzing, whistling or humming in the ears). Use hearing protection in accordance with employer's instructions and as required by occupational health and safety regulations. Appropriate controls to reduce the risk can include actions such as damping materials to prevent work pieces from "ringing".
- Use and maintain as recommended in the manual to prevent an unnecessary increase in noise levels.

Vibration

- When using a rotary percussive tool to perform work related activities, the operator can experience discomfort in the hands, arms, shoulders, neck or other parts of the body.
- If you experience numbness, tingling, pain or whitening of the skin in your fingers or hands, stop using the tool. Tell your employer and consult a physician.
- Wear warm clothing when working in cold conditions and keep your hands warm and dry.
- Exposure to vibration can cause disabling damage to the nerves and blood supply of the hands and arms.
- Use and maintain as recommended in the manual to prevent an unnecessary increase in vibration.
- Check the vibration level after each service. If higher than normal, contact your STANLEY dealer.

Hydraulic

- **Warning:** Hydraulic fluid under pressure could cause skin injection injury. If you are injured by hydraulic fluid, get medical attention immediately.
- Do not let hydraulic oil get on the skin. Hydraulic oil is hot. Wear Personal Protection Equipment (PPE) at all times.
- Do not exceed the maximum relief valve setting stated on the tool.
- Inspect and clean couplers before use, daily. Replace damaged couplers immediately.
- Hydraulic circuit control valve must be OFF before coupling or uncoupling tools. Failure to do so may damage the couplers and cause overheating of the hydraulic system.
- Ensure the couplers are properly connected and are tight.
- Do not operate the tool at fluid temperatures above 140°F (60°C). Higher temperatures can cause operator discomfort and damage to the tool.
- Do not exceed the rated flow and pressure as stated on the tool. Rapid failure of the internal seals may result.

What is the HD45 Hydraulic Hammer Drill?

HD45 is a rotary percussion tool for drilling concrete, masonry and asphalt, using carbide tipped, fluted drill bits (see "Accessories" on page 10). HD45 requires an external hydraulic power source capable of supplying 3-9 GPM.

Specifications		
Pressure	1500-2500 PSI (103-172 BAR)	
Flow	3-9 GPM (11-34 LPM)	
Max. Pressure	2500 PSI (172 BAR)	
Max. Relief Pressure	2250 PSI (155 BAR)	
Recommended Back Pressure	250 PSI (17 BAR) or less	
Rotation Speed	0-300 RPM	
Couplers	3/8 inch male pipe head hose end	
Port Size	SAE 8 O-ring	
Tool Weight	51 lbs (23 Kg)	
Tool Length	24 inches (61 cm)	
Width (at handles)	14 inches (36 cm)	
Max. Hydraulic Oil Temp.	140°F (60°C)	
HTMA/EHTMA Category	Type 2, Category D	
Underwater Tool Max. Depth	500 Ft. (Increase accumulator charge by 40 PSI per 100 Ft.)	
Recommended Hose Diameters for Underwater Applications		
Depth	**8 GPM (30 LPM)**	**12 GPM (45 LPM)**
100 Feet (31 Meters)	5/8 Inches (16 mm)	5/8 Inches (16 mm)
300 Feet (91 Meters)	3/4 Inches (19 mm)	1 Inch (25.4 mm)
600 Feet (183 Meters)	1 Inch (25.4 mm)	1 Inch (25.4 mm)
1000 Feet (305 Meters)	1 Inch (25.4 mm)	1 1/4 Inches (32 mm)

Sound & Vibration Declaration	
Measured A-Weighted sound power	111.8 dBA
Uncertainty	3.39 dBA
Measured A-Weighted Sound Pressure	103.8 dBA
Uncertainty	3.39 dBA
Values determined according to noise test code given in ISO 15744, 11203 and 3744. Test conducted by independent notified body to comply with 2000/14/EC:2005.	
HD45 Trigger Handle	
Measured Vibration Emission Value: 3-Axis	14.9 m/sec²
Uncertainty	2.23 m/sec²
HD45 Non-Trigger Handle	
Measured Vibration Emission Value: 3-Axis	17.5 m/sec²
Uncertainty	2.23 m/sec²

Parts of an HD45 - Detail A

1	Trigger
2	Trigger Lock (CE Models)
3	Hydraulic Input and Output Ports
4	STANLEY Logo Decal
5	Rotation Motor
6	Model & Serial Number
7	Composite Safety Decal (CE Models)
8	Sound Power Level Decal (CE Models)
9	Accumulator Charging Port
10	Handles
11	CE Decal (CE Models)
	General Caution Decal
12	Circuit Type "D" Decal (CE Models)
13	Tool Bit Latch
14	Rotation Lever
15	Tool Name Tag

Tool Operation - Detail B

⚠WARNING

Do not install or change tool accessories while the hydraulic power source is connected. Accidental engagement of the tool can cause serious injury. Disconnect the hydraulic power source before installing or changing accessories.

1. Power down the hydrauic power source and disconnect from the tool.
2. Open the tool bit latch.
3. Insert a bit in to the tool. Ensure the bit slides into the hex bushing.

Note: Never use a dull bit as they cause more vibration.

4. Lock the tool bit latch.

⚠WARNING

Never operate the tool unless the inserted bit is retained. Danger of high velocity projectiles. Secure the tool bit using the tool bit latch.

Set Rotation Direction and Speed

5. The rotation lever starts in the neutral position (up). Turn to set rotation direction and speed.

Note: Turn lever left for clockwise, right for counter clockwise. The bit will spin faster the farther to 90° the lever is turned.

6. Wipe hydraulic couplers clean and connect to the hydraulic power source. Ensure the couplers are tight and correctly engaged.

Note: Ensure hydraulic oil is at or above 50° F before using the tool. Warm oil if necessary.

7. Power up the hydraulic power source.
8. Wrap hands around the tool handles. Hold the tool with a light, but safe grip, taking account of the required hand reaction forces. Place the bit on the surface to be drilled, at a 90° angle. Apply down pressure.

⚠WARNING

Risk from vibration is greater when the holding the tool with higher gripping force. Hold with a light, safe grip.

When using a rotary percussive drill to perform work-related activities, you may experience discomfort in the hands, arms, shoulders, neck or other parts of the body. Adopt a comfortable posture while maintaining secure footing and avoiding awkward or off-balance postures. Change posture often during extended tasks as this can help avoid discomfort and fatigue.

⚠WARNING

High reaction torque can develop if tool stalls. Hold the tool correctly and be ready to counteract sudden movements. Hold the tool with both hands.

9. Push the trigger lock (CE models only).
10. Slowly squeeze the trigger to start drilling. Squeeze harder for fast speed operation. Guide the hammer drill using both hands on the handles. Keep the drill bit centered in the hole.

Note: Collaring should be avoided where possible. However, if necessary, exposure should be kept to a minimum.

⚠WARNING

Beware of being drawn into or trapped by the rotating tool bit. Keep away from rotating parts.

Note: If the bit binds in the hole, release the trigger, reverse drill rotation direction and remove the drill bit from the hole. Remove debris from the hole.

11. Release the trigger to immediately stop the tool.

Note: If you encounter a breakdown or the tool stops for any reason, release the trigger and power down the hydraulic power source.

Tool Maintenance

Use only accessories, consumables and parts recommended by STANLEY.

Daily Maintenance

1. Remove hydraulic power from the tool and check all hydraulic connections and hoses for damage. Replace damaged parts before operating the tool.
1. Using a calibrated flow and pressure gauge, check the output of the hydraulic power source. Ensure it matches the flow and pressure in "Specifications" on page 9. Proper flow and pressure are critical to maintaining proper tool speed.
2. Inspect the tool bit latch and associated parts. Replace when they have become worn, cracked or distorted.
3. Inspect tool to ensure all decals are legible. Contact STANLEY if replacements are needed.

Accumulator Charge - Detail C

Check accumulator charge every 6 months or if poor performance develops.

Required Tools:

- **STANLEY Accumulator Charge Kit (P/N 31254)**
- **Nitrogen Bottle**

Check

1. Remove the charging plug.
2. (a) Hold the chuck end of the tester and (b) twist the gauge counter-clockwise. This will retract the valve stem.
3. Screw the tester onto the breaker charging port. Twist the tester gauge clockwise and read the pressure indicated on the gauge. Charge should be 500-700 PSI (34-48 BAR).

Charge

4. Retract the tester valve stem.
5. Connect the charging assembly hose to the tester.
6. Twist the tester gauge clockwise to advance the valve stem.
7. Slowly open the snub valve and charge to 600 PSI (41 BAR).
8. Close the snub valve, retract the tester valve stem and remove the tester from the breaker charging port. Replace the charging plug.

Underwater Tool Maintenance - Detail D

1. Using a water displacing oil, spray into the trigger slot.
2. Spray into the side holes.
3. Spray into the tool bit hex.
4. Spray or dip the rest of the tool.

Tool Storage

Clean the tool and store in a clean, dry space that is safe from damage. Ensure the tool is secured and will not move during transport. An unsecured tool could cause injury or damage to the tool.

Tool Disposal

Hydraulic Oil

Hydraulic oil can contaminate the air, ground and water if not properly recycled. Recycle hydraulic oil in accordance with all State, Federal and local laws, at your local oil recycling facility.

Hydraulic Hoses

Hang hydraulic hoses to drain. Collect the oil for recycling. Contact your local municipal recycling authorities for an approved hydraulic hose recycling site.

Tool Body

Drain hydraulic oil from the tool, making sure to collect the oil for recycling. Discharge the accumulator, disassemble the tool and dispose of all non-metal parts. Recycle the metal components. Contact your local municipal recycling authorities for recycling instructions.

Accessories	
1 inch x 18 inch | Carbide Bit | Drills 8 7/8 inches deep	04668
1 inch x 24 inch | Carbide Bit | Drills 14 7/8 inches deep	02281
1 1/4 inch x 24 inch | Carbide Bit | Drills 14 7/8 inches deep	02282
1 1/4 inch x 36 inch | Carbide Bit | Drills 29 inches deep	04896
2 inch x 24 inch | Carbide Bit | Drills 14 3/4 inches deep	02283
Service Tools	
Seal Kit	05839
O-ring Tool Kit	04337
Accumulator Charge Kit	31254
Accumulator Tester	02835
Accumulator Cylinder Puller	05640
Flow and Pressure Tester	04182
Flow Sleeve Removal Tube	04910
Flow Sleeve Removal Tool	04919
Bearing Installation Tool | 1 Sided, .8 inch Ø	05044
Bearing Installation Tool | 2 Sided, 1.862 & 1.742 inch Ø	05061
Latch Removal Tool	05045
Latch Installation Tool | 2.882 inch Ø	05062
Latch Installation Tool | 2.125 inch Ø	05879

Troubleshooting

Problem	Possible Cause	Solution
Tool does not run or runs improperly.	The hydraulic power source is not running or not running properly.	Ensure the power source is delivering proper flow and pressure. See "Specifications" on page 9.
	Couplers or hoses are blocked.	Turn off and disconnect the tool from the hydraulic power source. Inspect and ensure no blockage exists.
	Low accumulator charge pressure.	Check accumulator. See "Accumulator Charge - Detail C" on page 10.
	Hydraulic oil is above the max. operating temp. of 140°F (60°C).	Provide an oil cooler to maintain proper oil temperature.
	High back pressure.	Check the hydraulic system for excessive back pressure.
	Relief valve set too low.	Adjust your hydraulic system relief valve to 2100-2250 PSI (145-155 BAR).
	Mechanical failure.	Contact your STANLEY dealer for service.
Tool has low rotation torque.	Motor is new.	Continue operation and see if performance improves.
	Drill bit is binding while drilling.	Ensure drill is straight during drilling.
	Mechanical Failure.	Contact your STANLEY dealer for service.
Oil leakage around trigger.	Valve spool seal failure.	Contact your STANLEY dealer for service.
Oil leakage on the drill bit.	Lower piston or drive hex seal failure.	Contact your STANLEY dealer for service.

STANLEY®

STANLEY Infrastructure
6430 SE Lake Road, Portland, Oregon 97222 USA
(503) 659-5660 / Fax (503) 652-1780
www.stanleyinfrastructure.com

© 2014 Stanley Black&Decker, Inc.
New Britain, CT 06053 USA