SLOAN WES 111-1.6/1.1

CODE NUMBER

3760000

DESCRIPTION

1.6/1.1 gpf, Polished Chrome Finish, Dual Flush, Sloan® Exposed Manual Water Closet Flushometer.

DETAILS

- Flush Volume: 1.6/1.1 gpf (6.0/4.2 Lpf)
- Finish: Polished Chrome (CP)
- Valve: Diaphragm
- Valve Body Material: Semi-red Brass
- Fixture Type: Water Closet
- Fixture Connection: Top spud
- Rough-In Dimension: 11 ½" (292mm)
- Spud Coupling: 1 ½" (38mm)
- Supply Pipe: 1" (25mm)

FEATURES

- Lifting Handle UP initiates reduced flush (1.1 gpf/4.2 Lpf), eliminating liquid and paper waste, saving a 1⁄2-gallon of water
- Pushing Handle DOWN initiates full flush (1.6 gpf/6.0 Lpf), eliminating all waste
- Metal Non-Hold-Open Handle with Triple Seal Handle Packing
- Sweat Solder Adapter with Cover Tube & Cast Wall Flange with Set Screw
- Non-Hold-Open Handle, Fixed Metering Bypass and No External Volume Adjustment to Ensure Water Conservation
- Diaphragm, Handle Packing and Vacuum Breaker to be molded from PERMEX® Rubber Compound for Chloramine Resistance
- Includes two (2) adhesive backed Metal Wall Plates etched with Instructions



COMPLIANCES & CERTIFICATIONS

(ADA Compliant, cUPC Certified, BAA Compliant, EPD)

RECOMMENDED SPECIFICATION

Valve Body, Cover, Tailpiece and Control Stop shall be in conformance with ASTM Alloy Classification for Semi- Red Brass. Valve shall be in compliance with the applicable sections of ASSE 1037 and ANSI/ASME 112.19.2.

VALVE OPERATING PRESSURE (FLOWING)

15–80 PSI (103–552 kPa). Specific fixtures may require greater minimum flowing pressure - consult manufacturer requirements.

DOWNLOADS

- Control Stop Repair and Maintenance Guide
- Flush Connections Flanges Repair and Maintenance Guide
- Tail Piece Repair and Maintenance Guide
- Additional Downloads

NOTES

All information contained within this document subject to change without notice.

Looking for other variations of the SLOAN WES 111 product? View the general spec sheet with all options.

Find a compatible urinal for this flushometer.
Find a compatible water closet for this flushometer.

Sloan 10500 Seymour Ave, Franklin Park, IL 60131
Phone: 800.982.5839 • Fax: 800.447.8329 • sloan.com

ROUGH-IN

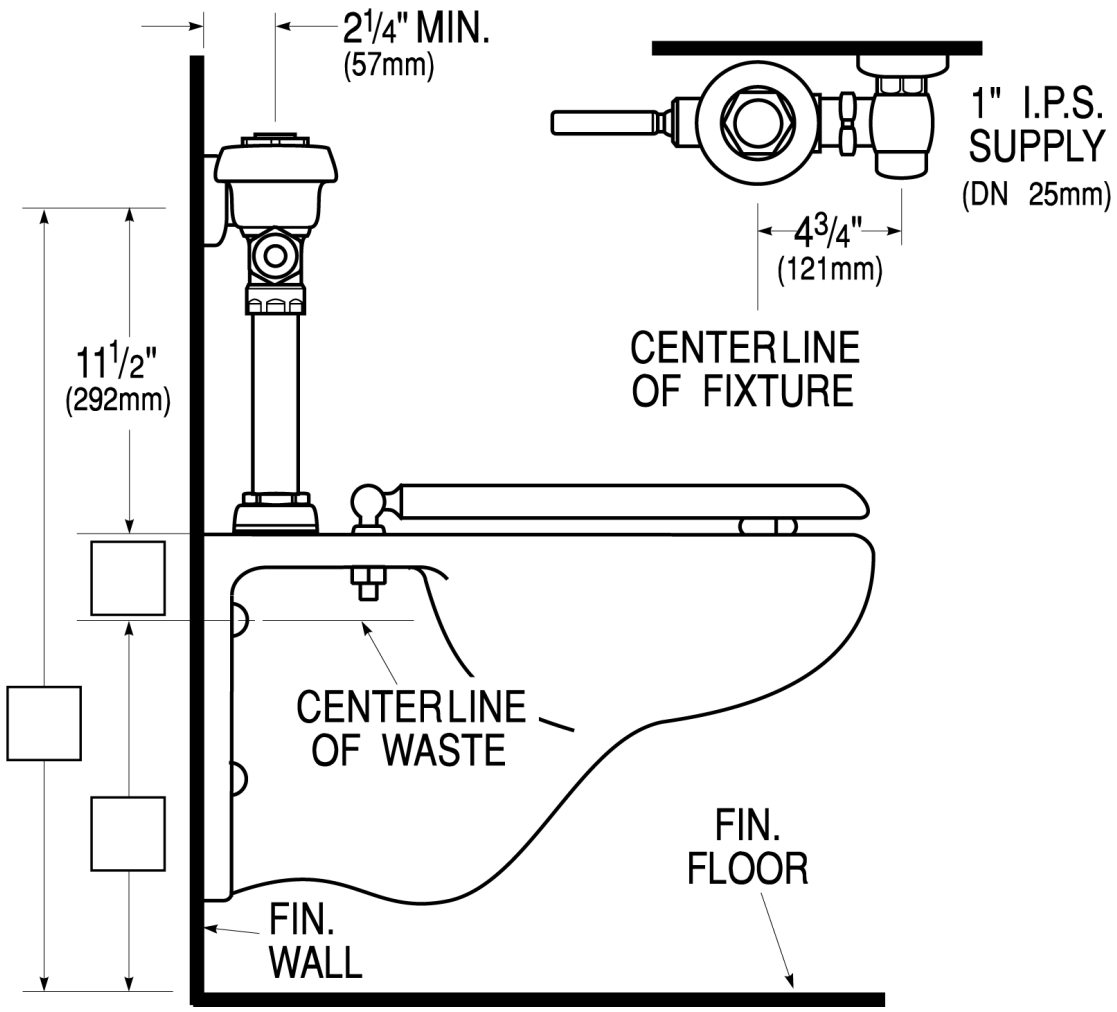

Sloan 10500 Seymour Ave, Franklin Park, IL 60131
Phone: 800.982.5839 • Fax: 800.447.8329 • sloan.com