ROLLON®

Linear Evolution

Hegra Rail



www.rollon.com

When you move. We move

Rollon S.p.A. was founded in 1975 as a manufacturer of linear motion components. Today Rollon group is a leading name in the design, production, and sale of linear rails, telescopic rails, and actuators, with headquarters based in Italy and offices and distributors located throughout the world. Rollon products are used in many industries, providing creative and efficient solutions in a wide variety of applications.

Rollon solutions for linear motion

Linear Line



Telescopic Line



Actuator Line



Actuator System Line









Linear Rails

Rails with roller bearings
Rails with caged ball bearings
Rails with recirculating ball bearing

Telescopic Rails

Rails with partial/total extension
Heavy duty rails
Rails for automated and manual applications

Actuators

Belt driven actuators
Ball screw driven actuators
Rack and pinion actuators

Solutions for industrial automation

Multi-axis for pick and place
Telescopic actuators
Seventh axis for robots
Solutions for metal sheet handling

Core Competencies

- Full range of linear rails, telescopic rails and actuators
- Worldwide presence with branches and distributors
- Fast delivery all over the world
- Large technical know-how for applications

Standard solutions

Wide range of products and sizes
Linear rails with roller and caged ball bearings
Heavy duty telescopic rails
Belt or ball screw driven linear actuators
Multi-axis systems

Collaboration

International know-how in several industries
Project consultancy
Maximizing performance and cost optimization

Customization

Special products
Research and development of new solutions
Technologies dedicated to different sectors
Optimal surface treatment

Applications













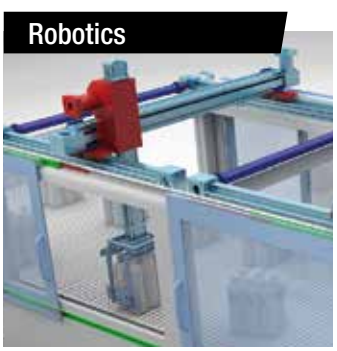

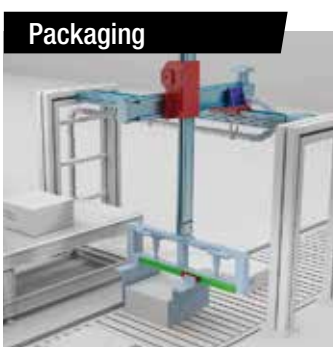

Contents

Hegra Rail



Overview of technical features

1 Product explanation HR-8

2 Product cross sections HR-10

3 Technical data
Performance characteristics and notes HR-15

4 Load capacities and dimensions
Partial extension guides HR-16
Full extension guides HR-29
Overextending guides HR-46
Heavy load extension guides HR-58
S-profiles HR-69

5 Accessories
Locking, catch plate, damping HR-74

6 Technical information
Selecting a suitable telescoping rail, Mounting tolerances,
Life cycle, Load capacity, HR-76
Deflection, Operating temperature, Corrosion protection,
Ball cage displacement, Motive force, Lubrication, HR-77
Maintenance intervals, Assembly information HR-78

Guides suitable for all applications HR-79

Ordering key
Ordering key with explanations HR-80

Technical features overview

Reference				Product name	Extraction	Size	Material			Stroke direction		
Product category		Product	Section				Steel	X*4	A	B	BM	EG
Partial extension		HTT		HTT030	60 % to 66 %	30	●	●	●	●		●
				HTT040		40	●	●	●	●		●
				HTT050		50	●	●	●	●		●
				HTT060		60	●	●	●	●		●
				HTT070		70	●	●	●	●		●
				HTT080		80	●	●	●	●		▲
				HTT100		100	●	●	●	●		
				HTT120		120	●	●	●	●		
				HTT150		150	●	●	●	●		
		HTC		HTC026		26	●	●		●		●
				HTC045		45	●			●		●
				HTC050		50	●			●		●
				HTC058		58	●	●		●		●
				HTC075		75	●			●		●
Full extension		HVB		HVB026		26	●	●		●		●
		HVD		HVD026		26	●	●		●		●
				HVD045		45	●			●		●
				HVD050		50	●			●		●
				HVD058		58	●	●		●		●
				HVD075	100 %	75	●			●		●
		HVC		HVC045		45	●			●		●
				HVC050		50	●			●		●
				HVC058		58	●	●		●	●	●
				HVC075		75	●			●	●	●
		HVT		HVT060		60	●	●	●	●		●
				HVT080		80	●	●	●	●		▲
				HVT100		100	●	●	●	●		
Over extension		H1D*1		H1D045		45	●			●		●
				H1D058		58	●	●		●		●
				H1D075		75	●			●		●
		H1C*1		H1C075	150 % to 200 %	75	●			●		●
		H1T*1		H1T060		60	●	●	●	●		●
				H1T080		80	●	●	●	●		●
				H1T100		100	●	●	●	●		
				H1T150		150	●	●	●	●		
		H2H080		H2H080		80	●	●	●			●
Heavy load extension		LTH		LTH30		30	●					
				LTH45		45	●					
				LTH30S		30	●					
				LTH45S		45	●					
		HGT		HGT060		60	●	●	●	●	●	●
				HGT080	100 %	80	●	●	●	●	●	▲
				HGT100		100	●	●	●	●	●	
				HGT120		120	●	●	●	●	●	
				HGT150		150	●	●	●	●	●	
				HGT200		200	●	●	●	●	●	
				HGT240		250	●	●	●	●	●	
S-profiles		LTF		LTF44	100 %	44	●			●		
		HGS		HGS060		60	●		●	●		●
				HGS080		80	●		●	●		●
				HGS100		100	●		●	●		●

The values given are defaults.

For a complete overview of the technical data, please consult our catalogs on the website www.rollon.com.

In many cases, special designs or alternative surface coatings are possible. Please contact our technical service.

*1 The over extension corresponds to 150 % stroke (1=150 % extraction). For a 200 % stroke (2=200 % extraction) please contact our technical service.

*2 Different temperature ranges from -30 °C to +250 °C, after consultation with the application technologies.

*3 The load capacity for aluminum is 40 % and for stainless steel 60 % of the stated values, if available in this material variant.

*4 Different stainless steels, such as the «electropolishing» option, are available, please contact our technical service.

*5 The availability of interlocks depends on the system length and varies per product group. Please contact our technical service.

*6 The operating temperature may differ if damping is used. Please contact our technical service.

● feasible
▲ only to length 1000
□ rotor is 35x12 EB=18
○ only with locking bolt
■ standard

Snap		Locking*5			Dam-ping	Max. load capacity per pair [N]		Max. rail length [mm]	Max. stroke [mm]	Max. extension speed [m/s]	Rigidity (deflection)	Operating tempera-ture*6 [°C]
EO	EB	VG	VO	VB	DG	C_{0rad} *3	C_{0ax}					
●	●				■	1200	70 % C_{0rad}	1000	660	0,8	+++	0 °C to +170 °C
●	●				■	2550	70 % C_{0rad}	1000	660	0,8	+++	0 °C to +170 °C
●	●	●	●	●	■	2900	70 % C_{0rad}	1200	720	0,8	+++	0 °C to +170 °C
●	●	●	●	●	●	3400	70 % C_{0rad}	1500	900	0,8	+++	0 °C to +170 °C
●	●	●	●	●	●	4200	70 % C_{0rad}	1700	1020	0,8	+++	0 °C to +170 °C
▲	▲	●	●	●	●	5000	70 % C_{0rad}	1700	1020	0,8	+++	0 °C to +170 °C
		●	●	●	●	10000	70 % C_{0rad}	2000	1200	0,8	+++	0 °C to +170 °C
		●	●	●	●	12000	70 % C_{0rad}	2000	1200	0,8	+++	0 °C to +170 °C
		●	●	●	●	15500	70 % C_{0rad}	2000	1200	0,8	+++	0 °C to +170 °C
●	●				●	750	60 % C_{0rad}	1000	660	0,8	+++	0 °C to +170 °C
●	●	●			●	1300	60 % C_{0rad}	1200	800	0,8	+++	0 °C to +170 °C
●	●	□	□	□	●	1800	60 % C_{0rad}	1200	800	0,8	+++	0 °C to +170 °C
●	●	●	●	●	●	2500	60 % C_{0rad}	1500	1000	0,8	+++	0 °C to +170 °C
●	●	●	●	●	●	3000	60 % C_{0rad}	1700	1020	0,8	+++	0 °C to +170 °C
●	●					1150	60 % C_{0rad}	1000	1000	0,8	+	0 °C to +170 °C
●	●					750	50 % C_{0rad}	1000	1000	0,8	++	0 °C to +170 °C
●	●				●	1700	50 % C_{0rad}	1200	1200	0,8	++	0 °C to +170 °C
●	●				●	1900	50 % C_{0rad}	1500	1500	0,8	++	0 °C to +170 °C
●	●				●	2500	50 % C_{0rad}	1500	1500	0,8	++	0 °C to +170 °C
●	●				●	3700	50 % C_{0rad}	2000	2000	0,8	++	0 °C to +170 °C
●	●				●	1200	50 % C_{0rad}	1200	1200	0,8	+	0 °C to +170 °C
●	●	●	●	●	●	1500	50 % C_{0rad}	1500	1500	0,8	+	0 °C to +170 °C
●	●	●	●	●	●	2100	50 % C_{0rad}	1500	1500	0,8	+	0 °C to +170 °C
●	●	●	●	●	●	3300	50 % C_{0rad}	2000	2000	0,8	+	0 °C to +170 °C
●	●	●	●	●	●	2700	50 % C_{0rad}	1500	1500	0,8	+	0 °C to +170 °C
▲	▲	●	●	●	●	4350	50 % C_{0rad}	2000	2000	0,8	+	0 °C to +170 °C
		●		●	●	5700	50 % C_{0rad}	2000	2000	0,8	+	0 °C to +170 °C
●	●				●	650	-	1000	1500	0,5	++	0 °C to +170 °C
●	●				●	1900	-	1500	2250	0,5	++	0 °C to +170 °C
●	●				●	2600	-	1500	2250	0,5	++	0 °C to +170 °C
●	●				●	1350	-	1500	2250	0,5	+	0 °C to +170 °C
●	●				●	2600	-	1500	2250	0,5	++	0 °C to +170 °C
●	●				●	3200	-	1500	2250	0,5	++	0 °C to +170 °C
					●	5500	-	2000	3000	0,5	++	0 °C to +170 °C
					●	7500	-	2000	3000	0,5	++	
●	●				●	5500	-	2000	3000	0,5	++	0 °C to +170 °C
						735	on request	1200	1215	0,5	++	-20 °C to +170 °C
						1673	on request	1500	1522	0,5	++	-20 °C to +170 °C
					●	749	on request	1200	1217	0,5	++	-20 °C to +50 °C
					●	1542	on request	1500	1522	0,5	++	-20 °C to +50 °C
●	●	●	●	●	●	5500	60 % C_{0rad}	1500	1500	0,5	+++	0 °C to +170 °C
▲	▲	●	●	●	●	9350	60 % C_{0rad}	2000	2000	0,5	+++	0 °C to +170 °C
		●	●	●	●	11000	60 % C_{0rad}	2000	2000	0,5	+++	0 °C to +170 °C
		●	●	●	●	11800	60 % C_{0rad}	2000	2000	0,5	+++	0 °C to +170 °C
		●	●	●	●	13900	60 % C_{0rad}	2000	2000	0,5	+++	0 °C to +170 °C
		●	●	●	●	17500	60 % C_{0rad}	2300	2300	0,5	+++	0 °C to +170 °C
		●	●	●	●	20000	60 % C_{0rad}	2000	2000	0,5	+++	0 °C to +170 °C
						648	-	1010	1010	0,3	+	-20 °C to +170 °C
●	●					1400	-	1000	1000	0,5	+++	0 °C to +170 °C
●	●					2450	-	1000	1000	0,5	+++	0 °C to +170 °C
●	●	○				3600	-	1500	1500	0,5	+++	0 °C to +170 °C

	steel	B	stroke in both directions	EG	snap on closed position	VG	locking closed position	DG	damping closed position
X	stainless steel	BM	stroke in both directions	EO	snap on opened position	VO	locking opened position		
A	aluminum		with driving disc	EB	snap on both positions	VB	locking both positions		

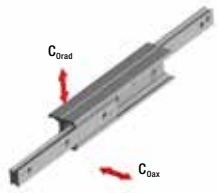

Product explanation

Partial and full extension guides of different types



Fig. 1

The Hegra Rail product family consists of five product categories: partial, fully extending, overextending and heavy-duty rails as well as S-profiles. Different versions in the single categories, such as design or materials, also provide for increased customer benefits.

The most important characteristics:

- High load capacity and minimal deflection
- Different versions and materials
- Compact design
- Lightweight; smooth operation
- Long life
- High functional reliability

Preferred applications:

- Rail vehicles (maintenance and battery compartments)
- Motor vehicle technology
- Construction and machine technology
- Special purpose machinery

Partial extension guides

Partial extension guides with a stroke of more than 50 % of the closed telescoping length, consisting of one guide rail and one slider. The high system rigidity is achieved here in combination with the connection construction.



Fig. 2

Full extension guides

Full extension guides with strokes of about 100 % of the closed length consisting of three elements in different designs and sizes.



Fig. 3

Overextending guides

Overextending guides with a stroke of up to 200 % of the closed telescoping length. The use of intermediate elements with a high moment of inertia achieves excellent system rigidity and a high load capacity in fully extended systems.



Fig. 4

Heavy load extension guides

Full extension guides with strokes of about 100 % of the length consist of a solid, double T-shaped intermediate element and the two corresponding sliders. This full extension guide was specially designed for extremely heavy loads with minimal deflection and high system rigidity.



Fig. 5

S-profiles

Full extension guides with strokes of about 100 % of the closed length consisting of two guide rails and one S-shaped intermediate element.
The advantages of the full extension guide are high rigidity and a compact design.

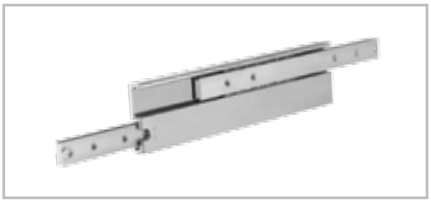

Fig. 6

Overview product cross sections

Partial extension guides

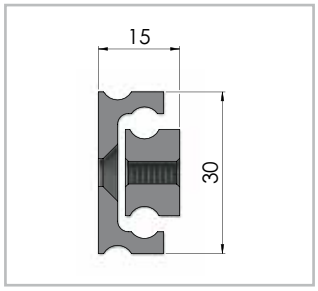

Fig. 7

HTT030

Load capacities p. HR-16

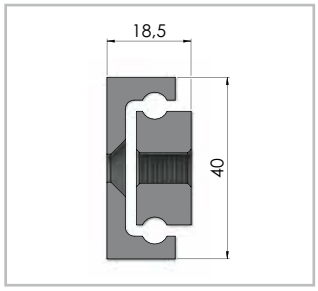

Fig. 8

HTT040

Load capacities p. HR-17

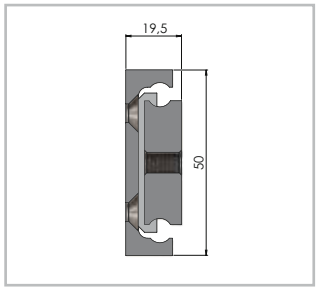

Fig. 9

HTT050

Load capacities p. HR-18

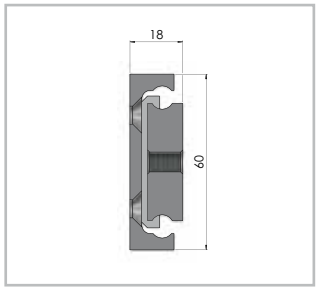

Fig. 10

HTT060

Load capacities p. HR-18

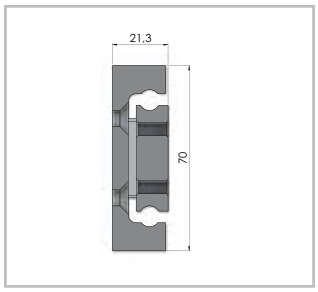

Fig. 11

HTT070

Load capacities p. HR-20

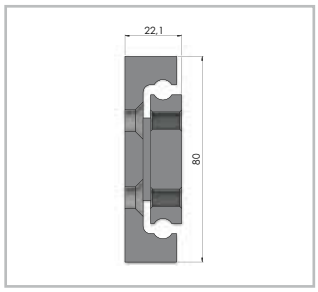

Fig. 12

HTT080

Load capacities p. HR-21

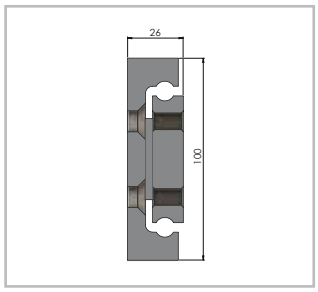

Fig. 13

HTT100

Load capacities p. HR-21

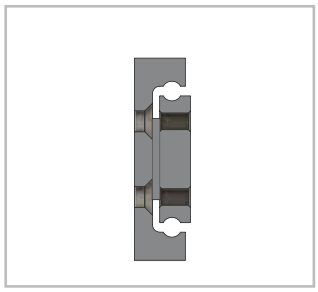

Fig. 14

HTT120, HTT150

Versions are available on request

Load capacities p. HR-22

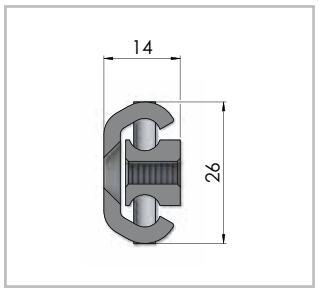

Fig. 15

HTC026

Load capacities p. HR-24

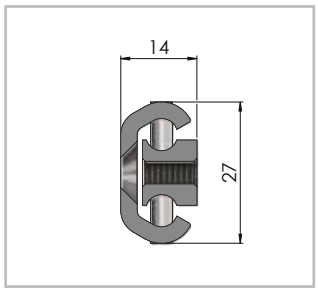

Fig. 16

HTCX026

Load capacities p. HR-24

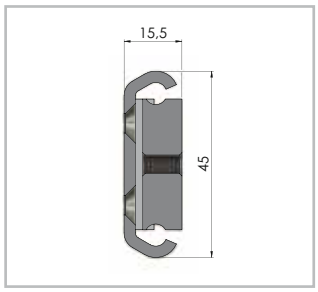

Fig. 17

HTC045

Load capacities p. HR-25

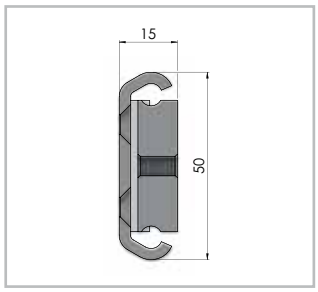

Fig. 18

HTC50

Load capacities p. HR-26

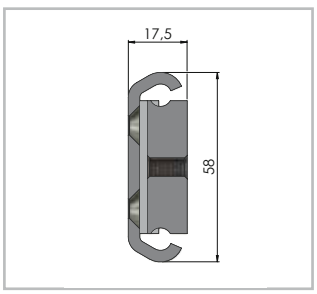

Fig. 19

HTC058

Load capacities p. HR-26

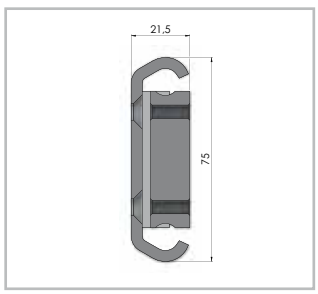

Fig. 20

HTC075

Load capacities p. HR-27

Full extension guides

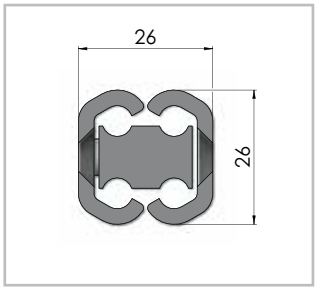

Fig. 21

HVB026

Load capacities p. HR-29

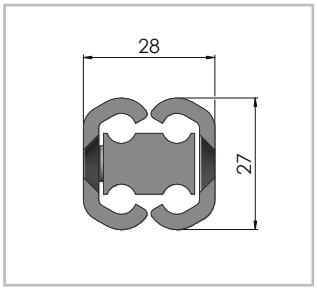

Fig. 22

HVBX026

Load capacities p. HR-29

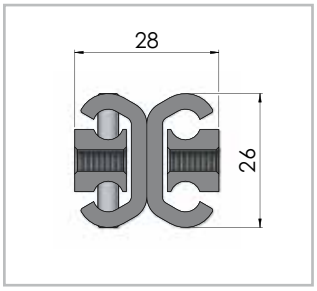

Fig. 23

HVD026

Load capacities p. HR-31

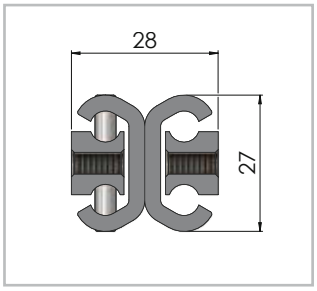

Fig. 24

HVDX026

Load capacities p. HR-31

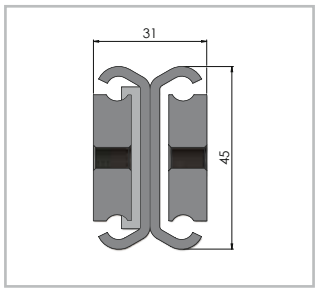

Fig. 25

HVD045

Load capacities p. HR-32

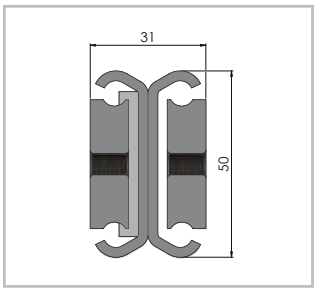

Fig. 26

HVD050

Load capacities p. HR-33

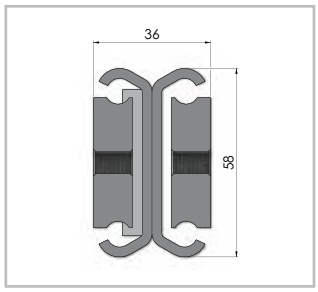

Fig. 27

HVD058

Load capacities p. HR-34

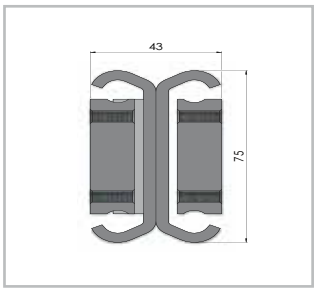

Fig. 28

HVD075

Load capacities p. HR-35

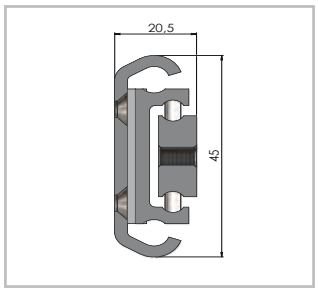

Fig. 29

HVC045

Load capacities p. HR-37

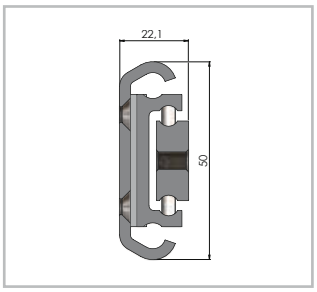

Fig. 30

HVC050

Load capacities p. HR-38

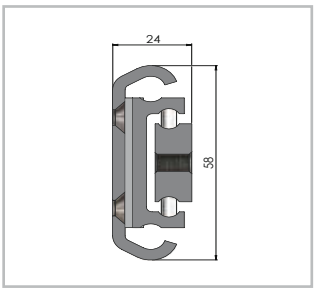

Fig. 31

HVC058

Load capacities p. HR-39

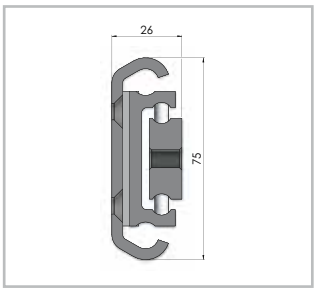

Fig. 32

HVC075

Load capacities p. HR-40

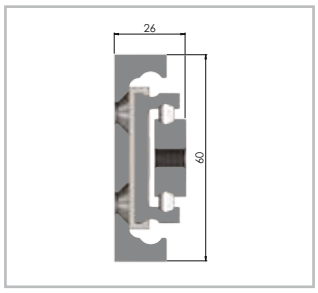

Fig. 33

HVT060

Load capacities p. HR-42

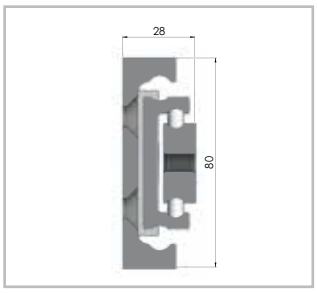

Fig. 34

HVT080

Load capacities p. HR-43

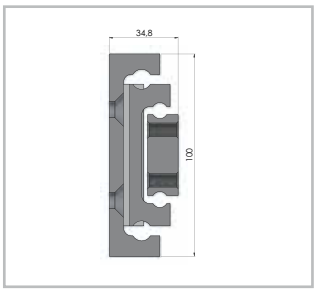

Fig. 35

HVT100

Load capacities p. HR-44

Overextending guides

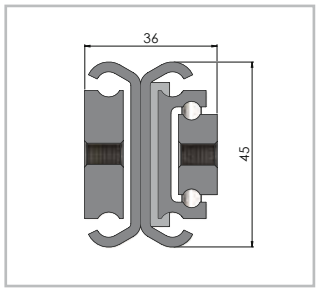

Fig. 36

H1D045

Load capacities p. HR-46

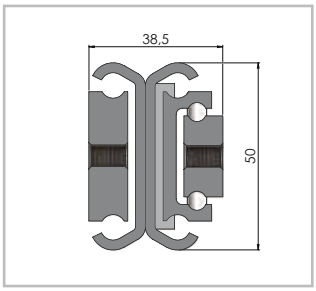

Fig. 37

H1D050

Load capacities p. HR-47

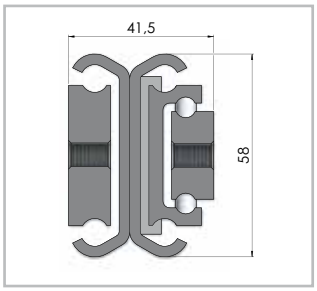

Fig. 38

H1D058

Load capacities p. HR-47

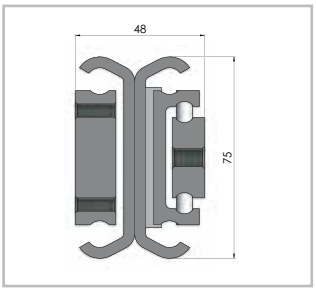

Fig. 39

H1D075

Load capacities p. HR-48

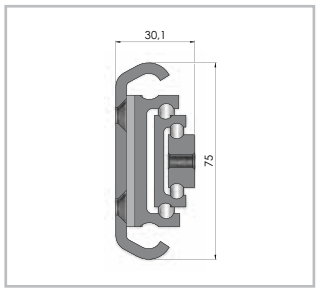

Fig. 40

H1C075

Load capacities p. HR-50

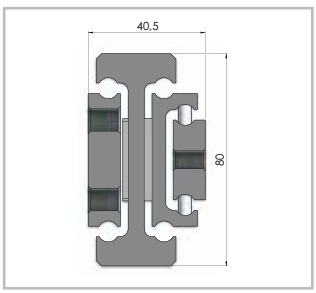

Fig. 41

H1T060

Load capacities p. HR-52

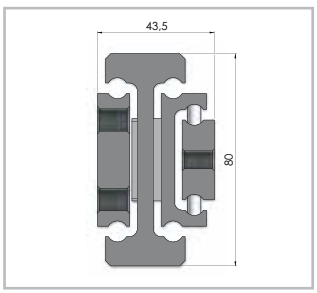

Fig. 42

H1T080

Load capacities p. HR-53

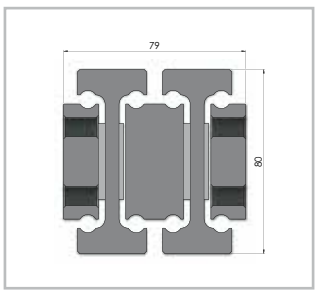

Fig. 43

H2H080

Load capacities p. HR-56

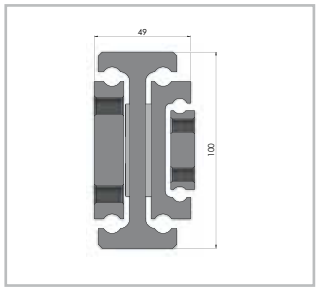

Fig. 44

H1T100

Load capacities p. HR-54

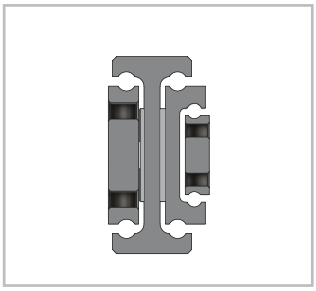

Fig. 45

H1T150

Versions are available on request

Load capacities p. HR-54

Heavy load extension guides

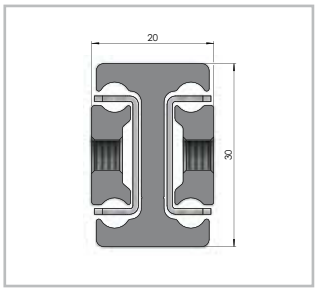

Fig. 46

LTH30

Load capacities p. HR-58

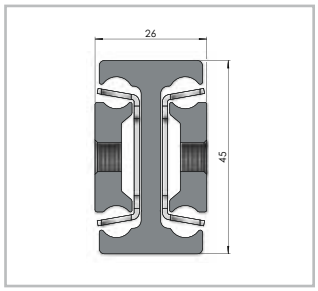

Fig. 47

LTH45

Load capacities p. HR-61

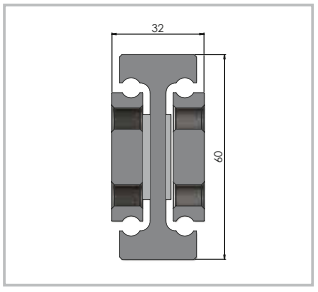

Fig. 48

HGT060

Load capacities p. HR-65

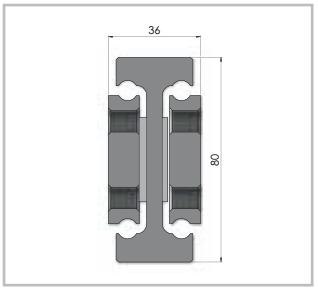

Fig. 49

HGT080

Load capacities p. HR-66

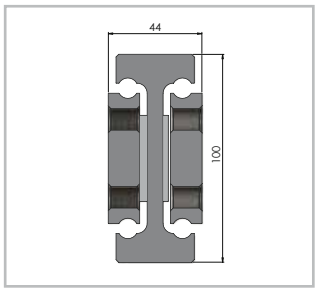

Fig. 50

HGT100

Load capacities p. HR-67

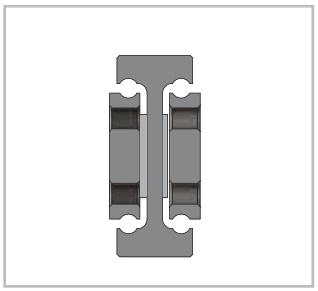

Fig. 51

HGT120, HGT150, HGT200, HGT240

Versions are available on request

Load capacities p. HR-67

S-profiles

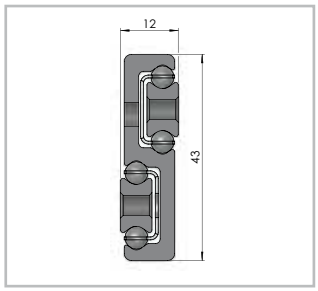

Fig. 52

LTF44

Load capacities p. HR-69

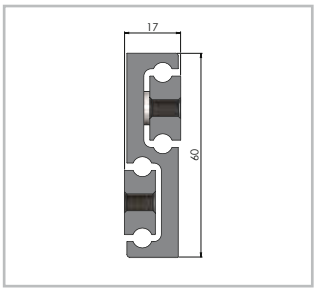

Fig. 53

HGS060

Load capacities p. HR-71

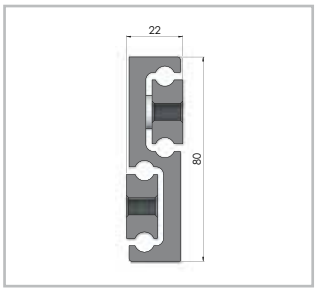

Fig. 54

HGS080

Load capacities p. HR-72

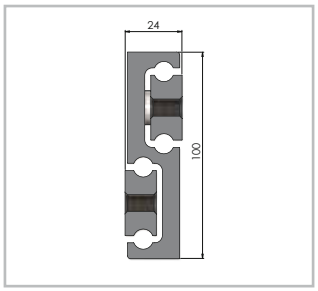

Fig. 55

HGS100

Load capacities p. HR-72

Technical data

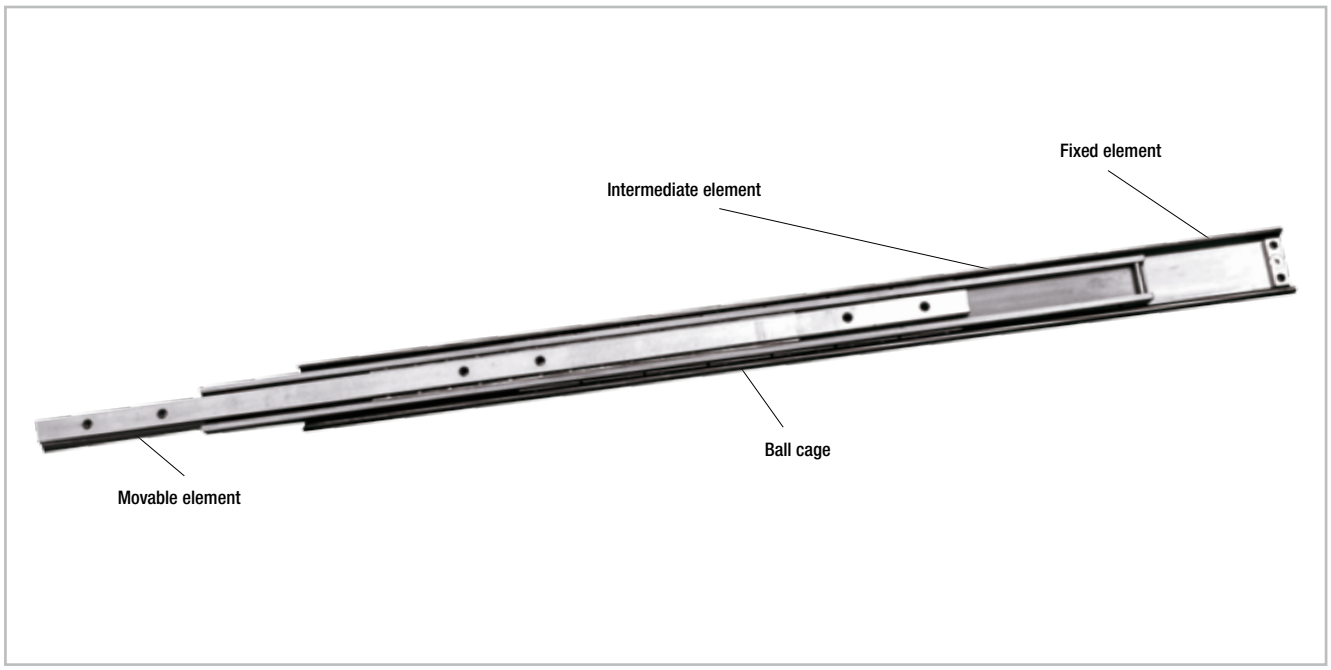

Fig. 56

Performance characteristics:

- Temperature range: 0 °C to +170 °C (32 °F to +338 °F)
  (in exceptions also -30 °C to +250 °C (-22 °F to +482 °F))
- Max. operating speed 0.8 m/s (depending on the application)
- Different materials and anti-corrosion coatings are available
- Special solutions, such as locking mechanisms, catches, damping elements or Einhaltung are available on request

Attention!
The load capacity for aluminum is 40 % and for stainless steel 60 % of the stated values, if available in this material variant.

Notes:

- Horizontal installation is recommended
- Vertical installation on request
- Special strokes on request
- All load capacities refer to one telescopic pair
- Mounting screws with a strength class of 10.9 must be used for all telescopic rails
- Internal stops are provided to stop the sliders when not under load and the ball cage. Please use external stops as limit stops for a system under load
- Not all accessories (interlocks, damping, drive disk, snap) can be combined with each other. Please contact our technical service.
- For models HGT with locking please observe right or left side use.
- Temperature range: LTH und LTF
  -20 °C to +170 °C (-22 °F to +338 °F)
- Temperature range: LTH ...S
  -20 °C to +50 °C (-22 °F to +122 °F)
- Telescopic guides made of aluminum or stainless steel are standard without greasing. If a greasing is desired, it must be stated separately at the order.
- Please note eventualy dimensional variations in use of stainless steel. Please contact our technical service.

Load capacities and dimensions

Partial extension guides

HTT030

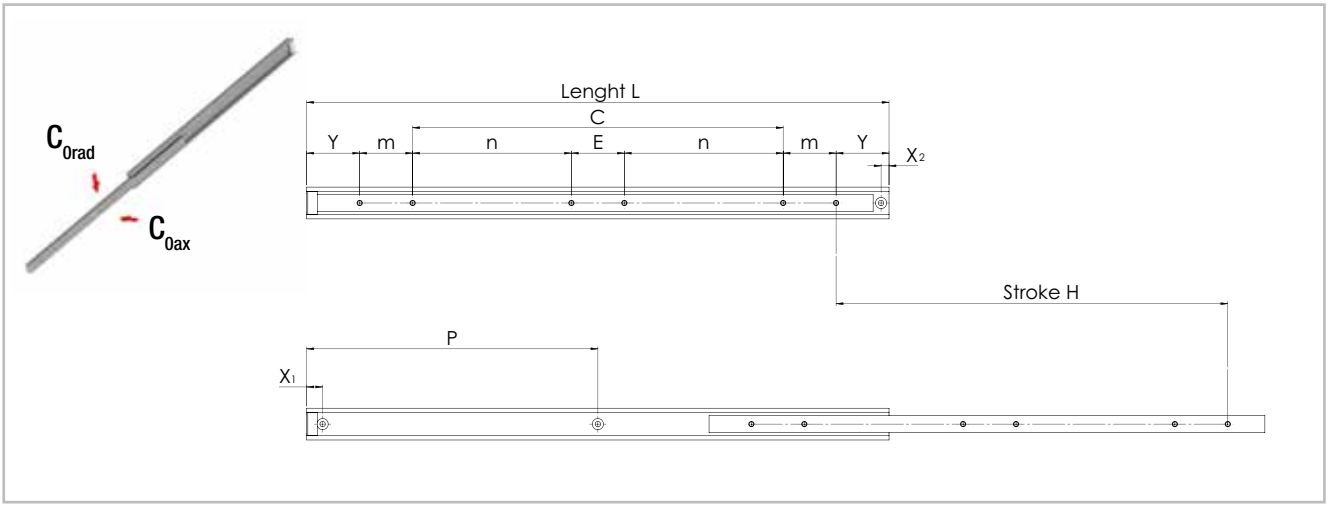

All dimensions are indicated in mm

Fig. 57

Type	Size	Length L [mm]	Stroke H [mm]	Load capacity per pair C_{0rad} [N]	Load capacity per pair C_{0ax} [N]	X1	X2	Y	m	n	E	C	P	Number of holes
HTT	30	250	130	1100	70 % C_{0rad}	15	7.5	50	50	-	-	50	125	4
		300	180	1200								100	150	
		350	230	1150								150	175	
		400	260	1100								200	200	
		450	310	1050								250	225	
		500	340	1000								300	250	
		550	370	950						150	50	-	275	6
		600	400	900						175			300	
		650	430	850						200			325	
		700	460	800						225			350	
		750	490	750						250			375	
		800	520	700						275			400	
		850	550	650						300			425	
		900	600	600						325			450	
		950	630	550						350			475	
		1000	660	500						375			500	

The load capacity for aluminum is 40% and for stainless steel 60% of the stated values, if available in this material variant (see Technical features overview).

Tab. 1

HTT040

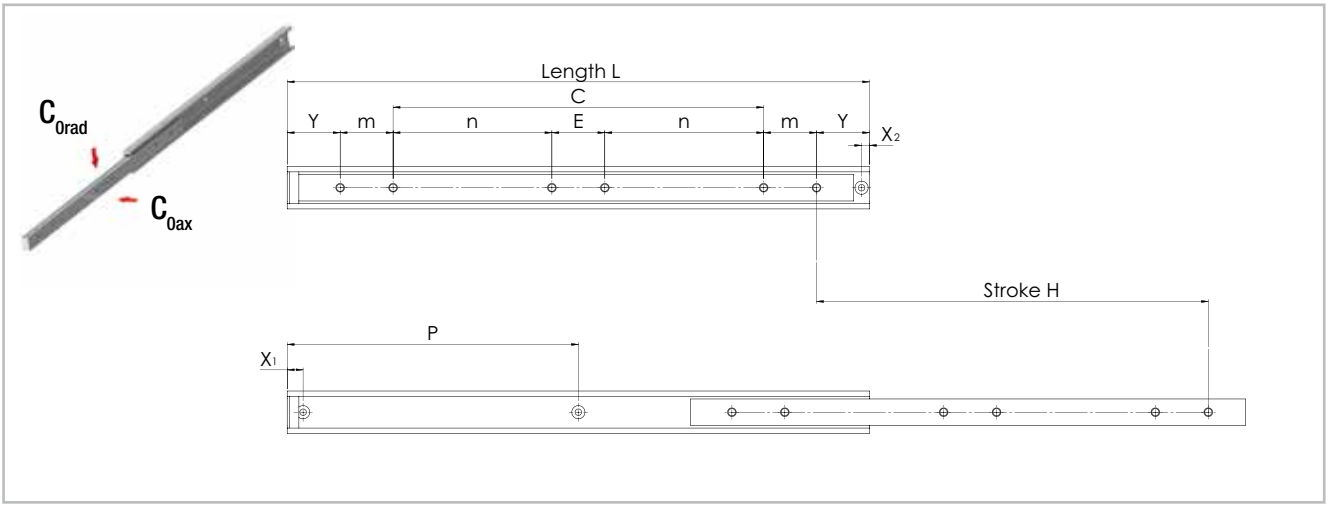

All dimensions are indicated in mm

Fig. 58

Type	Size	Length L [mm]	Stroke H [mm]	Load capacity per pair C_{0rad} [N]	Load capacity per pair C_{0ax} [N]	X1	X2	Y	m	n	E	C	P	Number of holes
HTT	40	250	130	2100	70 % C_{0rad}	15	7.5	50	50	-	-	50	125	4
		300	180	2250								100	150	
		350	230	2350								150	175	
		400	260	2450								200	200	
		450	310	2550								250	225	
		500	340	2500								300	250	
		550	370	2450						150	50	-	275	6
		600	400	2400						175			300	
		650	430	2350						200			325	
		700	460	2300						225			350	
		750	490	2250						250			375	
		800	520	2150						275			400	
		850	550	2050						300			425	
		900	600	1950						325			450	
		950	630	1800						350			475	
		1000	660	1650						375			500	

The load capacity for aluminum is 40 % and for stainless steel 60 % of the stated values, if available in this material variant (see Technical features overview).

Tab. 2

HTT050, HTT060

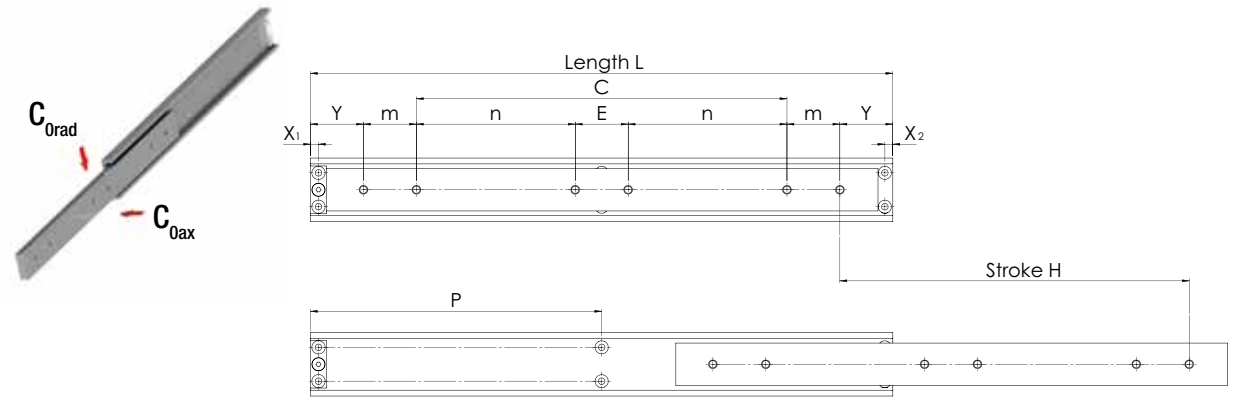

All dimensions are indicated in mm

Fig. 59

Type	Size	Length L [mm]	Stroke H [mm]	Load capacity per pair C_{0rad} [N]	Load capacity per pair C_{0ax} [N]	X1	X2	Y	m	n	E	C	P	Number of holes
HTT	50	300	180	2500	70 % C_{0rad}	15	7.5	50	50	-	-	100	150	4
		350	230	2600								150	175	
		400	260	2700								200	200	
		450	310	2800								250	225	
		500	340	2900								300	250	
		550	370	2850						150	50	-	275	6
		600	400	2800						175			300	
		650	430	2700						200			325	
		700	460	2600						225			350	
		750	490	2500						250			375	
		800	520	2400						275			400	
		850	550	2300						300			425	
		900	600	2200						325			450	
		950	630	2100						350			475	
		1000	660	2000						375			500	
		1100	690	1850						425			525	
		1200	720	1650						475			550	

The load capacity for aluminum is 40 % and for stainless steel 60 % of the stated values, if available in this material variant (see Technical features overview).

Tab. 3

Type	Size	Length L [mm]	Stroke H [mm]	Load capacity per pair C_{0rad} [N]	Load capacity per pair C_{0ax} [N]	X1	X2	Y	m	n	E	C	P	Number of holes
HTT	60	300	180	3200	70 % C_{0rad}	7.5	7.5	50	50	-	-	100	150	4
		350	210	3250								150	175	
		400	240	3300								200	200	
		450	270	3350								250	225	
		500	300	3400								300	250	
		550	330	3350						150	50	-	275	6
		600	360	3300						175			300	
		650	390	3250						200			325	
		700	420	3200						225			350	
		750	450	3100						250			375	
		800	480	3000						275			400	
		850	510	2900						300			425	
		900	540	2800						325			450	
		950	570	2700						350			475	
		1000	600	2600						375			500	
		1100	660	2450						425			550	
		1200	720	2250						475			600	
		1300	780	2050						525			650	
		1400	840	1900						575			700	
		1500	900	1700						625			750	

The load capacity for aluminum is 40 % and for stainless steel 60 % of the stated values, if available in this material variant (see Technical features overview).

Tab. 4

HTT070, HTT080, HTT100, HTT120, HTT150

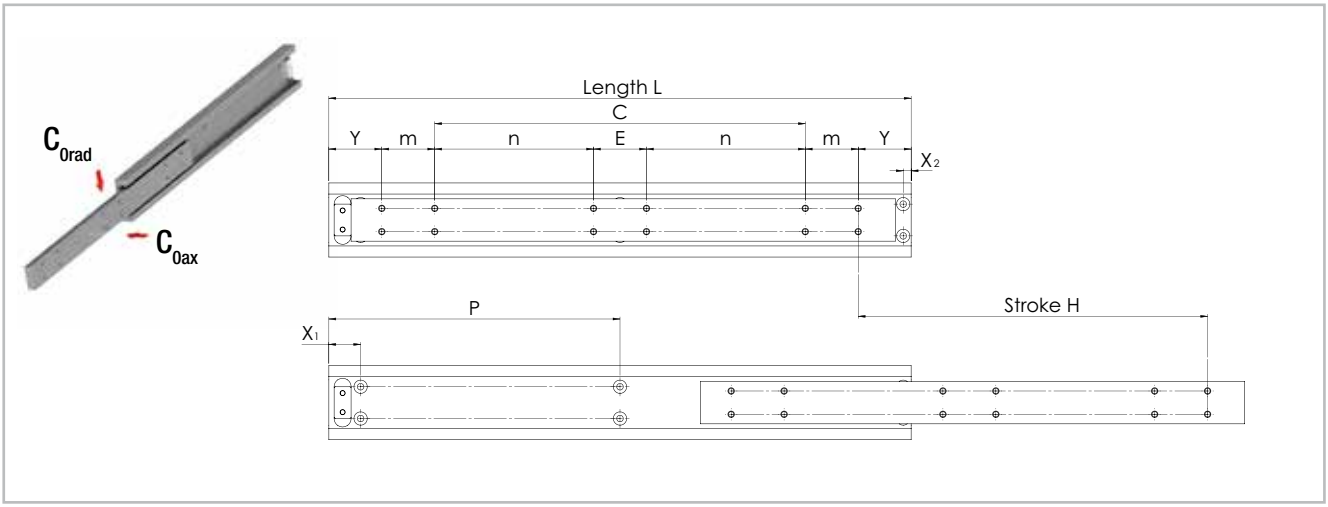

All dimensions are indicated in mm

Fig. 60

Type	Size	Length L [mm]	Stroke H [mm]	Load capacity per pair C_{0rad} [N]	Load capacity per pair C_{0ax} [N]	X1	X2	Y	m	n	E	C	P	Number of holes
HTT	70	500	300	4200	70 % C_{0rad}	30	7.5	50	50		-	300	250	8
		550	330	4150						150	50	-	275	12
		600	360	4100						175			300	
		650	390	4050						200			325	
		700	420	4000						225			350	
		750	450	3900						250			375	
		800	480	3800						275			400	
		850	510	3700						300			425	
		900	540	3600						325			450	
		950	570	3450						350			475	
		1000	600	3300						375			500	
		1100	660	3100						425			550	
		1200	720	2900						475			600	
		1300	780	2700						525			650	
		1400	840	2400						575			700	
		1500	900	2100						625			750	
		1600	960	1800						675			800	
		1700	1020	1500						725			850	

The load capacity for aluminum is 40 % and for stainless steel 60 % of the stated values, if available in this material variant (see Technical features overview).

Tab. 5

Type	Size	Length L [mm]	Stroke H [mm]	Load capacity per pair C_{0rad} [N]	Load capacity per pair C_{0ax} [N]	X1	X2	Y	m	n	E	C	P	Number of holes
HTT	80	500	300	4800	70 % C_{0rad}	35	15	100	100	-	-	100	250	8
		550	330	4900								150	275	
		600	360	5000								200	300	
		650	390	4900								250	325	
		700	420	4800								300	350	
		750	450	4700								350	375	
		800	480	4600								400	400	
		850	510	4500								450	425	
		900	540	4400								500	450	
		950	570	4250								550	475	
		1000	600	4100								600	500	
		1100	660	3800						300	100	-	550	12
		1200	720	3500						350			600	
		1300	780	3200						400			650	
		1400	840	2900						450			700	
		1500	900	2600						500			750	
		1600	960	2300						550			800	
		1700	1020	2000						600			850	
HTT	100	700	420	9000	70 % C_{0rad}	35	12	100	200	-	-	100	350	8
		750	450	9500								150	375	
		800	480	10000								200	400	
		850	510	9750								250	425	
		900	540	9500								300	450	
		950	570	9250								350	475	
		1000	600	9000								400	500	
		1100	660	8500						150	200	-	550	12
		1200	720	8000						200			600	
		1300	780	7500						250			650	
		1400	840	6900						300			700	
		1500	900	6300						350			750	
		1600	960	5700						400			800	
		1700	1020	5100						450			850	
		1800	1080	4500						500			900	
		1900	1140	3900						550			950	
		2000	1200	3300						600			1000	

The given load capacity for aluminum is 40 % and for stainless steel 60 % of the stated values, if available in this material variant (see Technical features overview).

Tab. 6

Other sizes and versions are available on request

Type	Size	Length	Load capacity per pair	
		L [mm]	C_{0rad} [N]	C_{0ax} [N]
HTT	120	700	11500	70 % C_{0rad}
		⋮	⋮	
		2000	4700	
HTT	150	700	14500	70 % C_{0rad}
		⋮	⋮	
		2000	6400	

Tab. 7

The given load capacity for aluminum is 40 % and for stainless steel 60 % of the stated values, if available in this material variant (see Technical features overview).

HTT

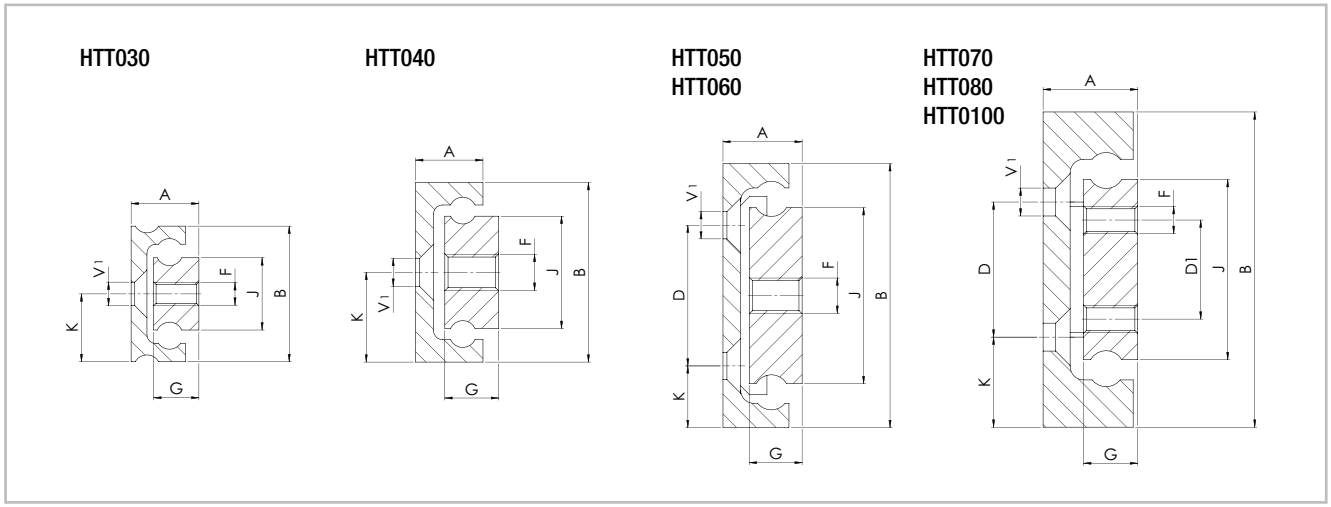

All dimensions are indicated in mm

[1] Mounting holes (V) for countersunk screws according to DIN 7991/ISO 10642

Fig. 61

Type	Size	A	B	J	G	K	D	D1	F	V1	Weight [kg/m]
HTT	30	15	30	16	10	15	-	-	M6	M5	2.4
	40	18.5	40	25	12	20			M8	M6	4.3
	50	19.5	50	30		12.5	25				5.6
	60	18	60	40		14	32				7.7
	70	21.3	70	40		20	30	22	M6		9.3
	80	22.1	80	50		25		30	M8	M8	10.4
	100	26	100	70	15	27.5	45	45	M10		17

Tab. 8

HTC026

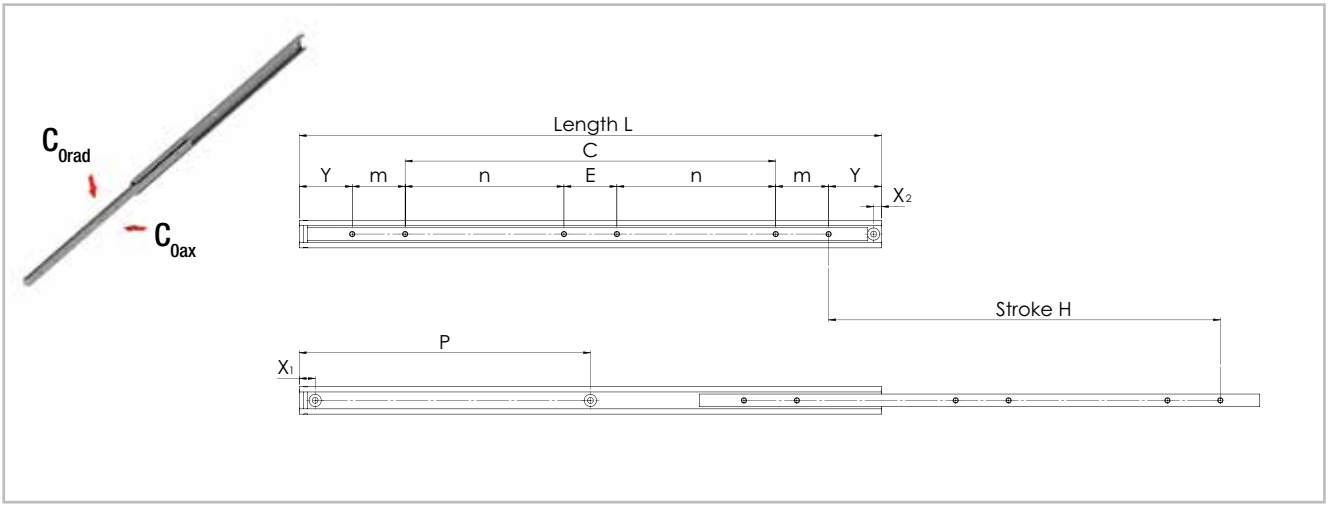

All dimensions are indicated in mm

Fig. 62

Type	Size	Length L [mm]	Stroke H [mm]	Load capacity per pair C_{0rad} [N]	Load capacity per pair C_{0ax} [N]	X1	X2	Y	m	n	E	C	P	Number of holes
HTC	26	250	130	700	60 % C_{0rad}	15	7.5	50	50	-	-	50	125	4
		300	180	750								100	150	
		350	230	750								150	175	
		400	260	700								200	200	
		450	310	650								250	225	
		500	340	600								300	250	
		550	370	550						150	50	-	275	6
		600	400	500						175			300	
		650	430	450						200			325	
		700	460	400						225			350	
		750	490	350						250			375	
		800	520	300						275			400	
		850	550	250						300			425	
		900	600	220						325			450	
		950	630	200						350			475	
		1000	660	180						375			500	

The load capacity for aluminum is 40 % and for stainless steel 60 % of the stated values, if available in this material variant (see Technical features overview).

Tab. 9

HTC045, HTC050, HTC058

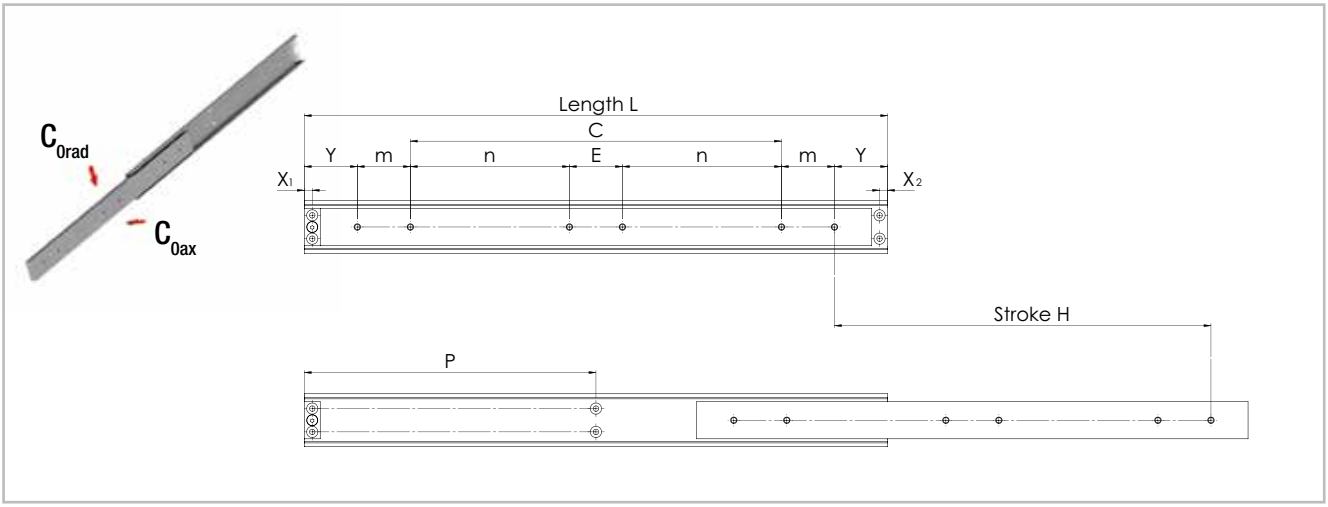

All dimensions are indicated in mm

Fig. 63

Type	Size	Length L [mm]	Stroke H [mm]	Load capacity per pair C_{0rad} [N]	Load capacity per pair C_{0ax} [N]	X1	X2	Y	m	n	E	C	P	Number of holes
HTC	45	300	180	1250	60 % C_{0rad}	7.5	7.5	50	50	-	-	100	150	4
		350	230	1300								150	175	
		400	260	1250								200	200	
		450	310	1200								250	225	
		500	340	1150								300	250	
		550	370	1100						150	50	-	275	6
		600	400	1050						175			300	
		650	430	1000						200			325	
		700	460	950						225			350	
		750	490	900						250			375	
		800	520	850						275			400	
		850	550	800						300			425	
		900	600	750						325			450	
		950	630	700						350			475	
		1000	660	650						375			500	
		1100	720	550						425			550	
		1200	800	450						475			600	

The load capacity for aluminum is 40 % and for stainless steel 60 % of the stated values, if available in this material variant (see Technical features overview).

Tab. 10

Type	Size	Length	Stroke	Load capacity per pair		X1	X2	Y	m	n	E	C	P	Number of holes
		L [mm]	H [mm]	C_{0rad} [N]	C_{0ax} [N]									
HTC	50	300	180	1500	60 % C_{0rad}	7.5	7.5	50	50	-	-	100	150	4
		350	230	1600								150	175	
		400	260	1700								200	200	
		450	310	1800								250	225	
		500	340	1750								300	250	
		550	370	1700						150	50	-	275	6
		600	400	1650						175			300	
		650	430	1600						200			325	
		700	460	1550						225			350	
		750	490	1450						250			375	
		800	520	1350						275			400	
		850	550	1250						300			425	
		900	600	1150						325			450	
		950	630	1050						350			475	
		1000	660	950						375			500	
		1100	720	750						425			550	
		1200	800	550						475			600	
HTC	58	300	180	2200	60 % C_{0rad}	7.5	7.5	50	50	-	-	100	150	4
		350	230	2300								150	175	
		400	260	2400								200	200	
		450	310	2500								250	225	
		500	340	2450								300	250	
		550	370	2400						150	50	-	275	6
		600	400	2350						175			300	
		650	430	2300						200			325	
		700	460	2200						225			350	
		750	490	2100						250			375	
		800	520	2000						275			400	
		850	550	1900						300			425	
		900	600	1800						325			450	
		950	630	1700						350			475	
		1000	660	1600						375			500	
		1100	720	1400						425			550	
		1200	800	1200						475			600	
		1300	860	1000						525			650	
		1400	920	800						575			700	
		1500	1000	600						625			750	

The load capacity for aluminum is 40 % and for stainless steel 60 % of the stated values, if available in this material variant (see Technical features overview).

Tab. 11

HTC075

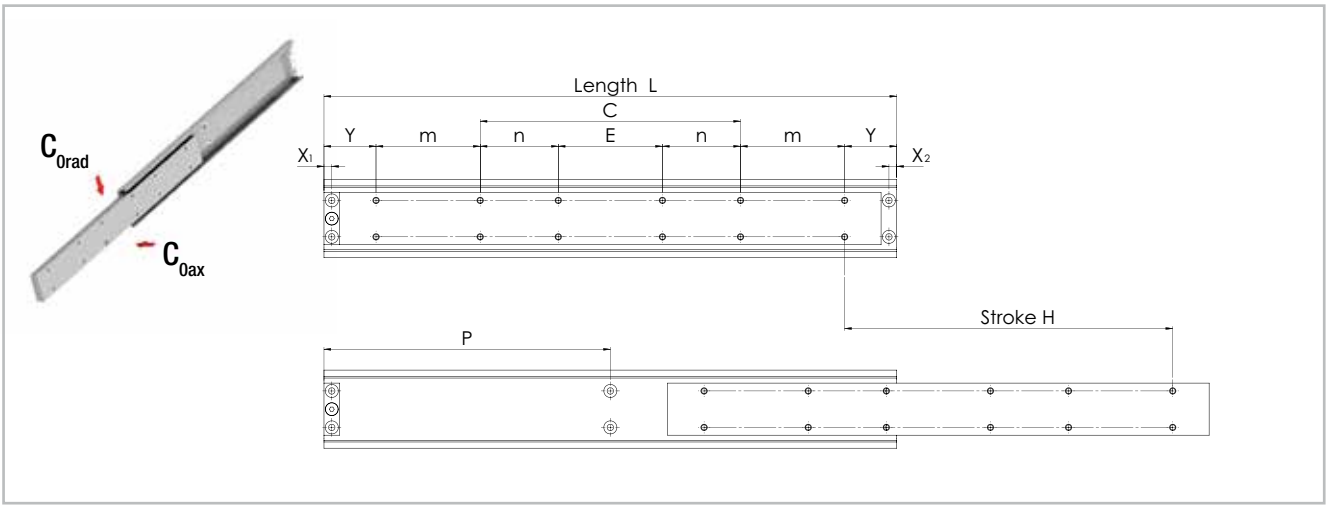

All dimensions are indicated in mm

Fig. 64

Type	Size	Length	Stroke	Load capacity per pair		X1	X2	Y	m	n	E	C	P	Number of holes
		L [mm]	H [mm]	C_{0rad} [N]	C_{0ax} [N]									
HTC	75	400	240	2800	60 % C_{0rad}	7.5	7.5	50	100	-	-	150	200	6
		450	270	2850								175	225	
		500	300	2900								200	250	
		550	330	3000						75	100	-	275	12
		600	360	2950						100			300	
		650	390	2900						125			325	
		700	420	2850						150			350	
		750	450	2800						175			375	
		800	480	2750						200			400	
		850	510	2700						225			425	
		900	540	2650						250			450	
		950	570	2600						275			475	
		1000	600	2500						300			500	
		1100	660	2250						350			550	
		1200	720	2000						400			600	
		1300	780	1750						450			650	
		1400	840	1500						500			700	
		1500	900	1200						550			750	
		1600	960	900						600			800	
		1700	1020	700						650			850	

The load capacity for aluminum is 40 % and for stainless steel 60 % of the stated values, if available in this material variant (see Technical features overview).

Tab. 12

HTC

HTC026

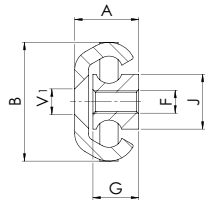

HTC045
HTC050
HTC058

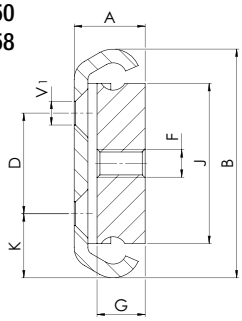

HTC075

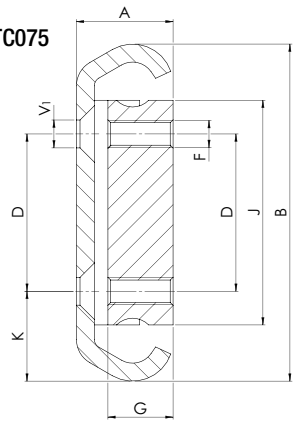

All dimensions are indicated in mm
V[1] Mounting holes (V) for countersunk screws according to DIN 7991/ISO 10642

Fig. 65

Type	Size	A	B	J	G	K	D	F	V1	Weight [kg/m]
HTC	26	14	26	12	10	-	-	M5	M5	1.81
	45	15.5	45	30	10	11.5	22	M6	M6	3.80
	50		50	35	10.5	14	22		M5	3.80
	58	17.5	58	40	12	13	32	M8	M6	7.10
	75	21.5	75	50	14.5	20	35	M6		8.80

Tab. 13

Full extension

HVB026

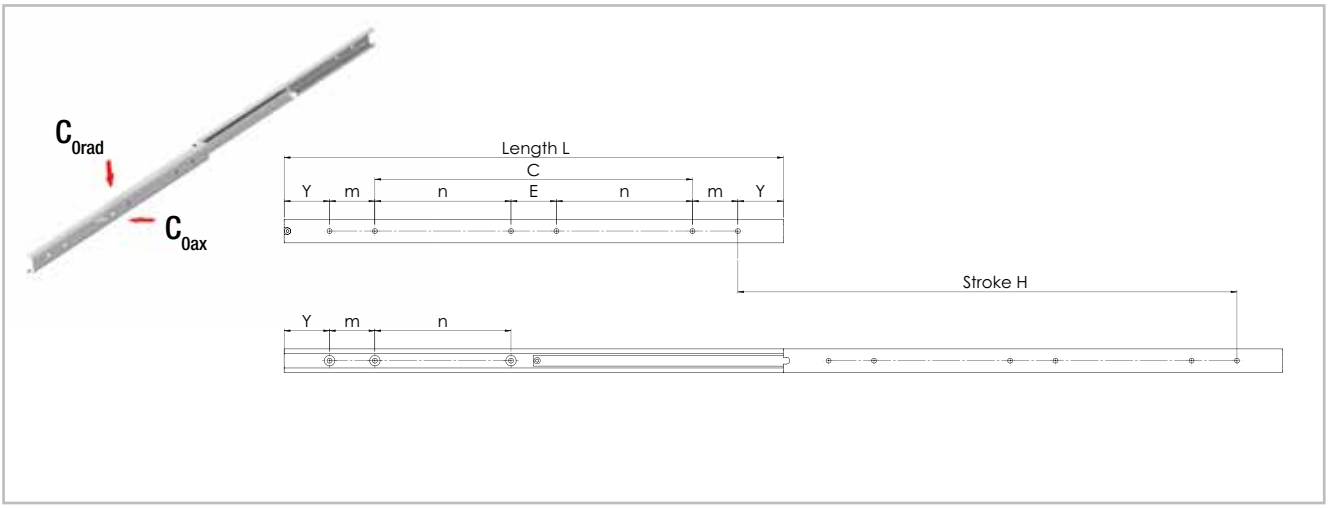

Fig. 66

All dimensions are indicated in mm
Attention! For assembly, the end limit screws must be removed. A drop out of the balls is possible after removing the screws!

Type	Size	Length L [mm]	Stroke H [mm]	Load capacity per pair C_{0rad} [N]	Load capacity per pair C_{0ax} [N]	Y	m	C	Number of holes
HVB	26	250	250	1050	60 % C_{0rad}	50	50	50	4
		300	300	1100				100	
		350	350	1150				150	
		400	400	1100				200	
		450	450	1050				250	
		500	500	1000				300	
		550	550	950				-	6
		600	600	900					
		650	650	850					
		700	700	800					
		750	750	750					
		800	800	700					
		850	850	650					
		900	900	600					
		950	950	550					
		1000	1000	500					

The load capacity for aluminum is 40 % and for stainless steel 60 % of the stated values, if available in this material variant (see Technical features overview).

Tab. 14

HVB

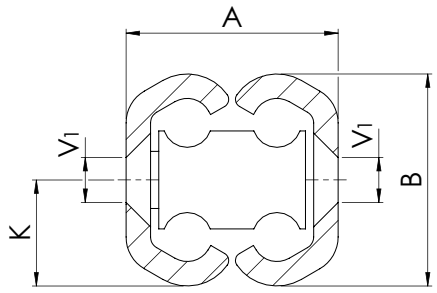

Fig. 67

All dimensions are indicated in mm
V[1] Mounting holes (V) for countersunk screws according to DIN 7991/ISO 10642

Type	Size	A	B	K	V1	Weight [kg/m]
HVB	26	26	26	13	M5	3.80

Tab. 15

HVD026

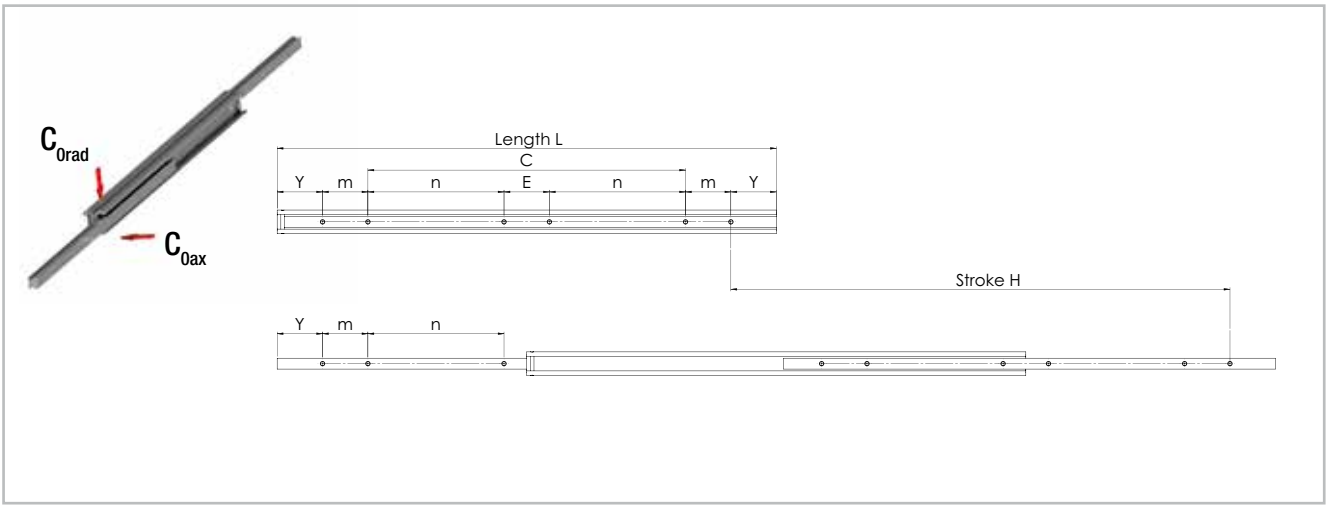

All dimensions are indicated in mm

Fig. 68

Type	Size	Length L [mm]	Stroke H [mm]	Load capacity per pair C_{0rad} [N]	Load capacity per pair C_{0ax} [N]	Y	m	C	Number of holes
HVD	26	250	250	650	50 % C_{0rad}	50	50	50	4
		300	300	700				100	
		350	350	750				150	
		400	400	700				200	
		450	450	650				250	
		500	500	600				300	
		550	550	550				-	6
		600	600	500					
		650	650	450					
		700	700	400					
		750	750	350					
		800	800	300					
		850	850	270					
		900	900	240					
		950	950	220					
		1000	1000	200					

The load capacity for aluminum is 40 % and for stainless steel 60 % of the stated values, if available in this material variant (see Technical features overview).

Tab. 16

HVD045, HVD050, HVD058

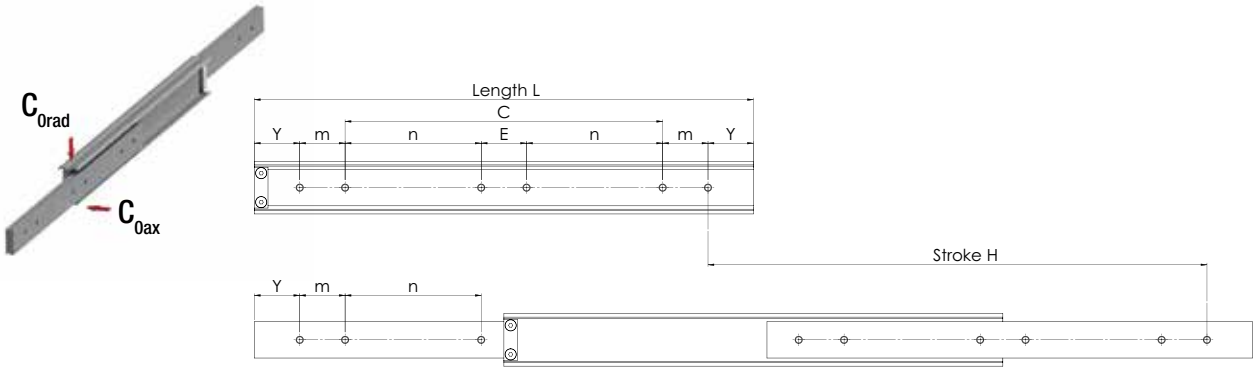

All dimensions are indicated in mm

Fig. 69

Type	Size	Length L [mm]	Stroke H [mm]	Load capacity per pair C_{0rad} [N]	Load capacity per pair C_{0ax} [N]	Y	m	n*	E*	C	Number of holes
HVD	45	300	300	1600	50 % C_{0rad}	50	50	-	-	100	4
		350	350	1650						150	
		400	400	1700						200	
		450	450	1700						250	
		500	500	1700						300	
		550	550	1650				150	50	-	6
		600	600	1600				175			
		650	650	1550				200			
		700	700	1500				225			
		750	750	1450				250			
		800	800	1400				275			
		850	850	1350				300			
		900	900	1300				325			
		950	950	1250				350			
		1000	1000	1200				375			
		1100	1100	1100				400			
		1200	1200	1000				425			

Tab. 17

The load capacity for aluminum is 40 % and for stainless steel 60 % of the stated values, if available in this material variant (see Technical features overview).

* When using full telescopes with interlocks in the open state (VO) or with interlocks open and closed (VB) the following measures change:
n reduces by 35 mm - E increases to 120 mm.

Type	Size	Length L [mm]	Stroke H [mm]	Load capacity per pair C_{0rad} [N]	Load capacity per pair C_{0ax} [N]	Y	m	n*	E*	C	Number of holes
HVD	50	300	300	1800	50 % C_{0rad}	50	50	-	-	100	4
		350	350	1850						150	
		400	400	1900						200	
		450	450	1850						250	
		500	500	1800						300	
		550	550	1750				150	50	-	6
		600	600	1700				175			
		650	650	1650				200			
		700	700	1600				225			
		750	750	1550				250			
		800	800	1500				275			
		850	850	1450				300			
		900	900	1400				325			
		950	950	1350				350			
		1000	1000	1300				375			
		1100	1100	1200				425			
		1200	1200	1100				475			
		1300	1300	1000				525			
		1400	1400	900				575			
		1500	1500	800				625			

The load capacity for aluminum is 40 % and for stainless steel 60 % of the stated values, if available in this material variant (see Technical features overview).

*When using full telescopes with interlocks in the open state (VO) or with interlocks open and closed (VB) the following measures change:
n reduces by 35 mm - E increases to 120 mm.

Tab. 18

Type	Size	Length	Stroke	Load capacity per pair		Y	m	n*	E*	C	Number of holes
		L [mm]	H [mm]	C_{0rad} [N]	C_{0ax} [N]						
HVD	58	300	300	2400	50 % C_{0rad}	50	50	-	-	100	4
		350	350	2450						150	
		400	400	2500						200	
		450	450	2450						250	
		500	500	2400						300	
		550	550	2350				150	50	-	6
		600	600	2300				175			
		650	650	2250				200			
		700	700	2200				225			
		750	750	2150				250			
		800	800	2100				275			
		850	850	2050				300			
		900	900	2000				325			
		950	950	1900				350			
		1000	1000	1850				375			
		1100	1100	1750				425			
		1200	1200	1650				475			
		1300	1300	1550				525			
		1400	1400	1450				575			
		1500	1500	1400				625			

Tab. 19

The load capacity for aluminum is 40 % and for stainless steel 60 % of the stated values, if available in this material variant (see Technical features overview).

*When using full telescopes with interlocks in the open state (VO) or with interlocks open and closed (VB) the following measures change:
n reduces by 35 mm - E increases to 120 mm.

HVD075

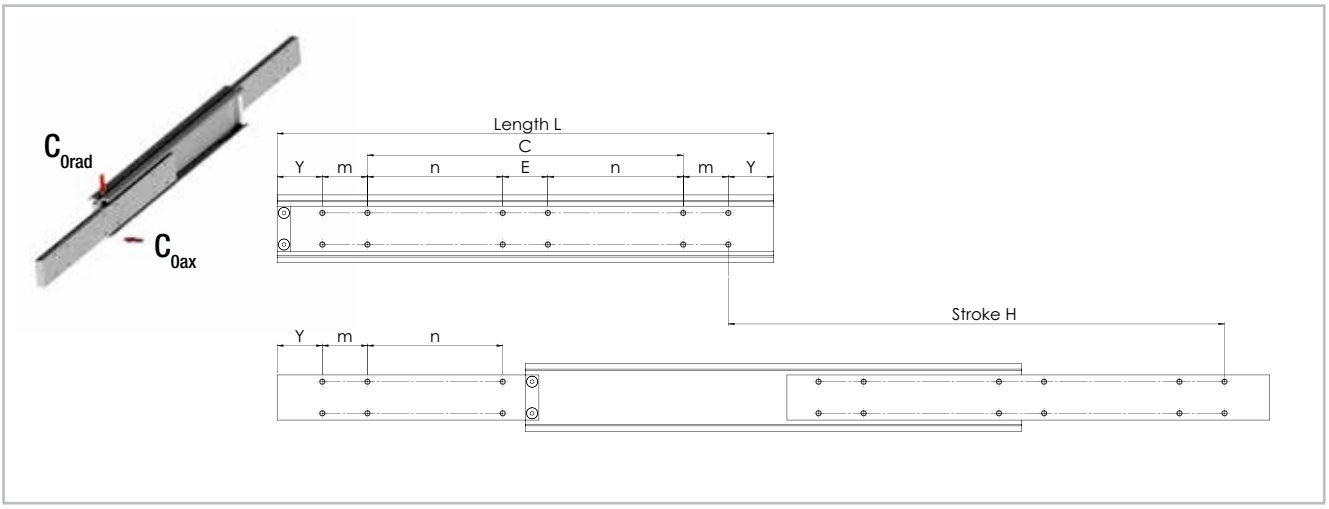

All dimensions are indicated in mm

Fig. 70

Type	Size	Length L [mm]	Stroke H [mm]	Load capacity per pair C_{0rad} [N]	Load capacity per pair C_{0ax} [N]	Y	m	n*	E*	C	Number of holes
HVD	75	300	300	3600	50 % C_{0rad}	50	50	-	-	100	8
		350	350	3650						150	
		400	400	3700						200	
		450	450	3650						250	
		500	500	3600						300	
		550	550	3550				150	50	-	12
		600	600	3500				175			
		650	650	3450				200			
		700	700	3400				225			
		750	750	3350				250			
		800	800	3300				275			
		850	850	3250				300			
		900	900	3200				325			
		950	950	3150				350			
		1000	1000	3100				375			
		1100	1100	3000				425			
		1200	1200	2900				475			
		1300	1300	2750				525			
		1400	1400	2600				575			
		1500	1500	2450				625			
		1600	1600	2300				675			
		1700	1700	2100				725			
		1800	1800	1900				775			
		1900	1900	1700				825			
		2000	2000	1400				875			

The load capacity for aluminum is 40 % and for stainless steel 60 % of the stated values, if available in this material variant (see Technical features overview).

*When using full telescopes with interlocks in the open state (VO) or with interlocks open and closed (VB) the following measures change: n reduces by 35 mm - E increases to 120 mm.

Tab. 20

HVD

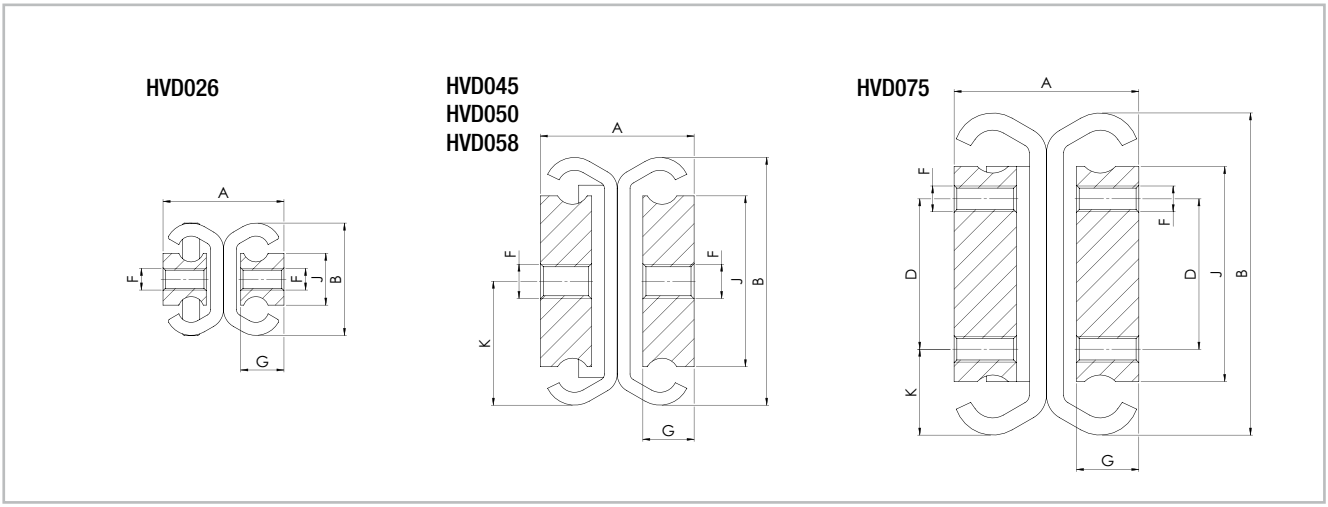

All dimensions are indicated in mm

Fig. 71

Type	Size	A	B	J	G	K	D	F	Weight [kg/m]
HVD	26	28	26	12	10	-	-	M5	3.80
	45	31	45	30		22.5		M6	7.70
	50		50	35		25			8.80
	58	35	58	40	12	29		M8	11.70
	75	43	75	50	14.5	20	35		18.80

Tab. 21

HVC045, HVC050, HVC058, HVC075

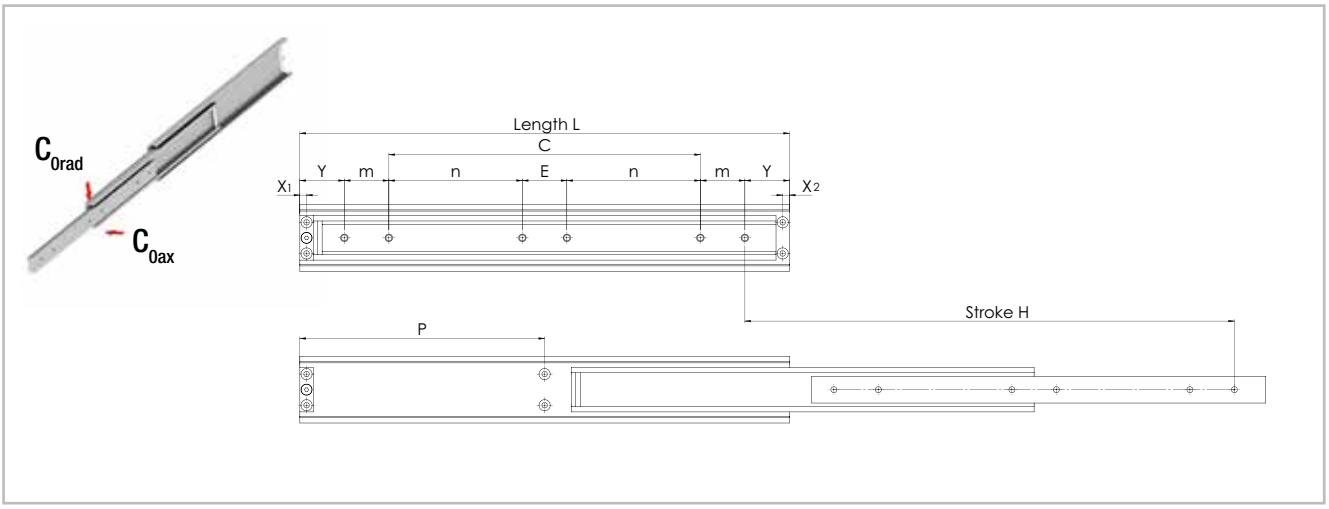

All dimensions are indicated in mm

Fig. 72

Type	Size	Length	Stroke	Load capacity per pair		X1	X2	Y	m	C	P	Number of holes
		L [mm]	H [mm]	C_{0rad} [N]	C_{0ax} [N]							
HVC	45	300	300	1150	50 % C_{0rad}	7.5	7.5	50	50	100	-	4
		350	350	1200						150		
		400	400	1200						200		
		450	450	1150						250		
		500	500	1150						300		
		550	550	1100						-	275	6
		600	600	1050							300	
		650	650	1000							325	
		700	700	950							350	
		750	750	900							325	
		800	800	850							400	
		850	850	800							425	
		900	900	750							450	
		950	950	700							475	
		1000	1000	650							500	
		1100	1100	500							50	
		1200	1200	400							600	

The load capacity for aluminum is 40% and for stainless steel 60% of the stated values, if available in this material variant (see Technical features overview).

Tab. 22

Type	Size	Length	Stroke	Load capacity per pair		X1	X2	Y	m	n*	E*	C	P	Number of holes
		L [mm]	H [mm]	C_{0rad} [N]	C_{0ax} [N]									
HVC	50	300	300	1400	50 % C_{0rad}	7.5	7.5	50	50	-	-	100	-	4
		350	350	1450								150		
		400	400	1500								200		
		450	450	1450								250		
		500	500	1400								300		
		550	550	1350						150	50	-	275	6
		600	600	1300						175			300	
		650	650	1250						200			325	
		700	700	1200						225			350	
		750	750	1150						250			325	
		800	800	1100						275			400	
		850	850	1050						300			425	
		900	900	1000						325			450	
		950	950	950						350			475	
		1000	1000	900						375			500	
		1100	1100	800						425			550	
		1200	1200	700						475			600	
		1300	1300	600						525			650	
		1400	1400	500						575			700	
		1500	1500	400						625			750	

Tab. 23

The load capacity for aluminum is 40 % and for stainless steel 60 % of the stated values, if available in this material variant (see Technical features overview).

*When using full telescopes with interlocks in the open state (VO) or with interlocks open and closed (VB) the following measures change: n reduces by 35 mm - E increases to 120 mm.

Type	Size	Length L [mm]	Stroke H [mm]	Load capacity per pair C_{0rad} [N]	Load capacity per pair C_{0ax} [N]	X1	X2	Y	m	n*	E*	C	P	Number of holes
HVC	58	300	300	2000	50 % C_{0rad}	7.5	7.5	50	50	-	-	100	-	4
		350	350	2050								150		
		400	400	2100								200		
		450	450	2050								250		
		500	500	2000								300		
		550	550	1950						150	50	-	275	6
		600	600	1900						175			300	
		650	650	1850						200			325	
		700	700	1800						225			350	
		750	750	1750						250			325	
		800	800	1700						275			400	
		850	850	1650						300			425	
		900	900	1600						325			450	
		950	950	1500						350			475	
		1000	1000	1450						375			500	
		1100	1100	1350						425			550	
		1200	1200	1250						475			600	
		1300	1300	1150						525			650	
		1400	1400	1050						575			700	
		1500	1500	1000						625			750	

Tab. 24

The load capacity for aluminum is 40 % and for stainless steel 60 % of the stated values, if available in this material variant (see Technical features overview).

*When using full telescopes with interlocks in the open state (VO) or with interlocks open and closed (VB) the following measures change:
n reduces by 35 mm - E increases to 120 mm.

Type	Size	Length L [mm]	Stroke H [mm]	Load capacity per pair C_{0rad} [N]	Load capacity per pair C_{0ax} [N]	X1	X2	Y	m	n*	E*	C	P	Number of holes
HVC	75	300	300	3200	50 % C_{0rad}	7.5	7.5	50	50	-	-	100	-	4
		350	350	3250								150		
		400	400	3300								200		
		450	450	3250								250		
		500	500	3200								300		
		550	550	3150						150	50	-	275	6
		600	600	3100						175			300	
		650	650	3050						200			325	
		700	700	3000						225			350	
		750	750	2950						250			325	
		800	800	2900						275			400	
		850	850	2850						300			425	
		900	900	2800						325			450	
		950	950	2750						350			475	
		1000	1000	2700						375			500	
		1100	1100	2600						425			550	
		1200	1200	2500						475			600	
		1300	1300	2350						525			650	
		1400	1400	2200						575			700	
		1500	1500	2050						625			750	
		1600	1600	1900						675			800	
		1700	1700	1750						725			50	
		1800	1800	1600						775			900	
		1900	1900	1450						825			950	
		2000	2000	1300						875			1000	

Tab. 25

The load capacity for aluminum is 40 % and for stainless steel 60 % of the stated values, if available in this material variant (see Technical features overview).

*When using full telescopes with interlocks in the open state (VO) or with interlocks open and closed (VB) the following measures change:
n reduces by 35 mm - E increases to 120 mm.

HVC

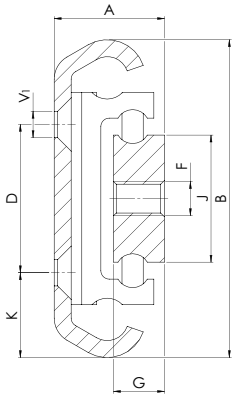

All dimensions are indicated in mm
V1 Mounting holes (V) for countersunk screws according to DIN 7991/ISO 10642

Fig. 73

Type	Size	A	B	J	G	K	D	F	V1	Weight [kg/m]
HVC	45	20.5	45	16	10	11.5	22	M6	M5	4.00
	50	22.1	50	20	12	14				5.10
	58	24	58	25		13	32	M8	M6	6.50
	75	26	75	30		20	35			9.30

Tab. 26

HVT060, HVT080

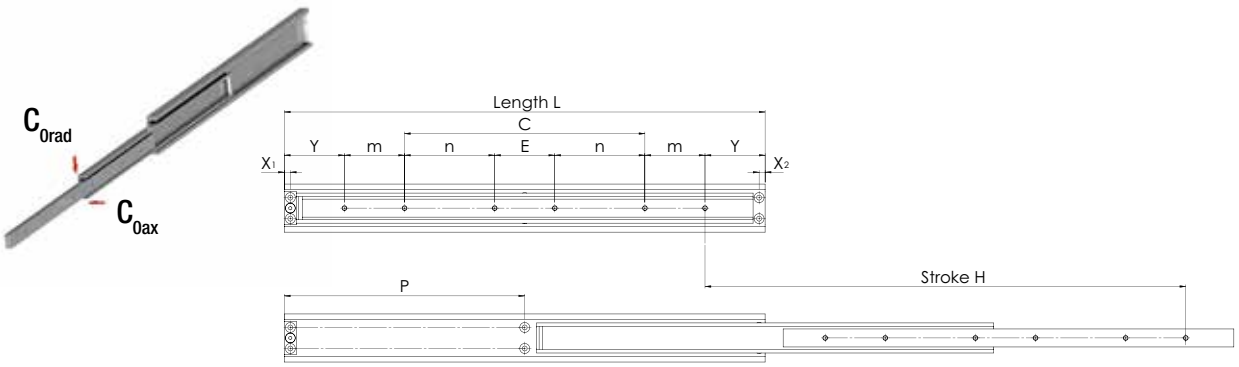

All dimensions are indicated in mm

Fig. 74

Type	Size	Length L [mm]	Stroke H [mm]	Load capacity per pair C_{0rad} [N]	Load capacity per pair C_{0ax} [N]	X1	X2	Y	m	n*	E*	C	P	Number of holes
HVT	60	300	300	2600	50 % C_{0rad}	7.5	7.5	50	50	-	-	100	-	4
		350	350	2650								150		
		400	400	2700								200		
		450	450	2650								250		
		500	500	2600								300		
		550	550	2550						150	50	-	275	6
		600	600	2500						175			300	
		650	650	2450						200			325	
		700	700	2400						225			350	
		750	750	2350						250			325	
		800	800	2300						275			400	
		850	850	2250						300			425	
		900	900	2200						325			450	
		950	950	2130						350			475	
		1000	1000	2050						375			500	
		1100	1100	1900						425			550	
		1200	1200	1750						475			600	
		1300	1300	1600						525			650	
		1400	1400	1500						575			700	
		1500	1500	1400						625			750	

Tab. 27

The load capacity for aluminum is 40% and for stainless steel 60% of the stated values, if available in this material variant (see Technical features overview).

*When using full telescopes with interlocks in the open state (VO) or with interlocks open and closed (VB) the following measures change: n reduces by 35 mm - E increases to 120 mm.

Type	Size	Length L [mm]	Stroke H [mm]	Load capacity per pair C_{0rad} [N]	Load capacity per pair C_{0ax} [N]	X1	X2	Y	m	n*	E*	C	P	Number of holes
HVT	80	500	500	4250	50 % C_{0rad}	10	10	100	100	-	-	100	-	4
		550	550	4300								150		
		600	600	4350								200		
		650	650	4350								250		
		700	700	4350								300		
		750	750	4300								350		
		800	800	4250						150	100	-	400	6
		850	850	4200						175			425	
		900	900	4100						200			450	
		950	950	4000						225			475	
		1000	1000	3900						250			500	
		1100	1100	3700						300			550	
		1200	1200	3500						350			600	
		1300	1300	3250						400			650	
		1400	1400	3000						450			700	
		1500	1500	2700						500			750	
		1600	1600	2400						550			800	
		1700	1700	2150						600			850	
		1800	1800	1900						650			900	
		1900	1900	1650						700			950	
		2000	2000	1400						750			1000	

Tab. 28

The load capacity for aluminum is 40 % and for stainless steel 60 % of the stated values, if available in this material variant (see Technical features overview).

*When using full telescopes with interlocks in the open state (VO) or with interlocks open and closed (VB) the following measures change: n reduces by 10 mm - E increases to 120 mm.

HVT100

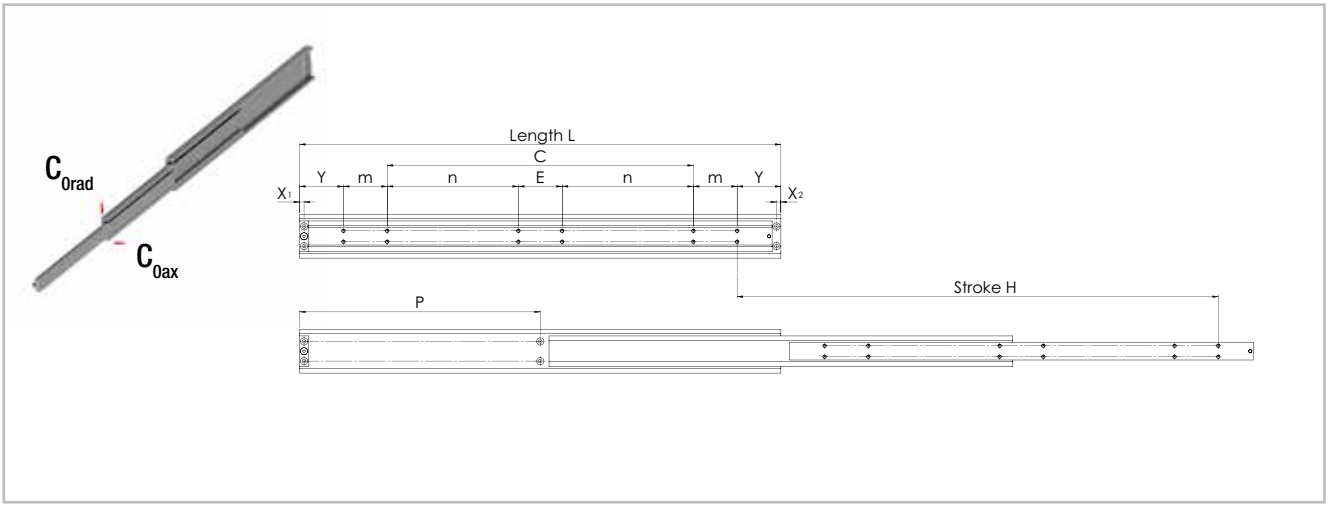

All dimensions are indicated in mm

Fig. 75

Type	Size	Length L [mm]	Stroke H [mm]	Load capacity per pair C_{0rad} [N]	Load capacity per pair C_{0ax} [N]	X1	X2	Y	m	n*	E*	C	P	Number of holes
HVT	100	600	600	5700	50 % C_{0rad}	10	10	100	100	-	-	200	-	8
		650	650	5600								250		
		700	700	5500								300		
		750	750	5400								350		
		800	800	5300								400		
		850	850	5200								450		
		900	900	5100								500		
		950	950	5000								550		
		1000	1000	4900								600		
		1100	1100	4700						300	100	-	550	12
		1200	1200	4500						350			600	
		1300	1300	4250						400			650	
		1400	1400	4000						450			700	
		1500	1500	3750						500			750	
		1600	1600	3500						550			800	
		1700	1700	3250						600			850	
		1800	1800	3000						650			900	
		1900	1900	2700						700			950	
		2000	2000	2400						750			1000	

Tab. 29

The load capacity for aluminum is 40 % and for stainless steel 60 % of the stated values, if available in this material variant (see Technical features overview).

*When using full telescopes with interlocks in the open state (VO) or with interlocks open and closed (VB) the following measures change: n reduces by 10 mm - E increases to 120 mm.

HVT

HVT060
HVT080

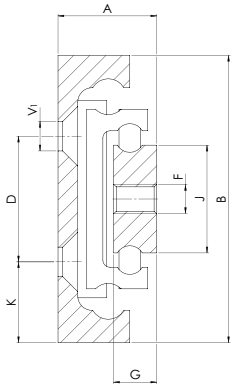

HVT100

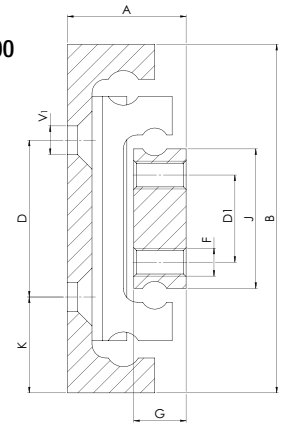

All dimensions are indicated in mm
V[1] Mounting holes (V) for countersunk screws according to DIN 7991/ISO 10642

Fig. 76

Type	Size	A	B	J	G	K	D	D1	F	V1	Weight [kg/m]
HVT	60	26	60	25	12	14	32	-	M8	M6	5.10
	80	27.5	80	30		12.5	35			M8	11.40
	100	34	100	40	15	27.5	45	25			18.70

Tab. 30

Over extension

H1D045, H1D050, H1D058

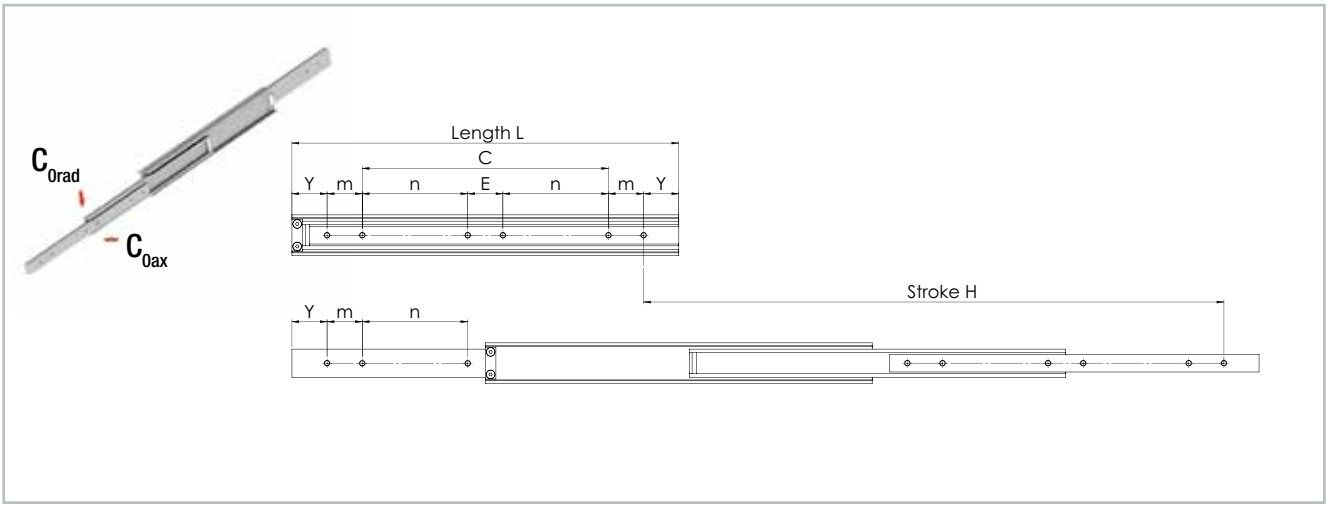

All dimensions are indicated in mm

Fig. 77

Type	Size	Length L [mm]	Stroke H [mm]	Load capacity per pair C_{0rad} [N]	Y	m	n	E	C	Number of holes
H1D	45	250	375	500	50	50	-	-	50	4
		300	450	550					100	
		350	525	600					150	
		400	600	650					200	
		450	675	650					250	
		500	750	650					300	
		550	825	650			150	50	-	6
		600	900	600			175			
		650	975	600			200			
		700	1050	550			225			
		750	1125	500			250			
		800	1200	450			275			
		850	1275	400			300			
		900	1350	350			325			
		950	1425	300			350			
		1000	1500	250			375			

The load capacity for aluminum is 40 % and for stainless steel 60 % of the stated values, if available in this material variant (see Technical features overview).

Tab. 31

Type	Size	Length L [mm]	Stroke H [mm]	Load capacity per pair C_{0rad} [N]	Y	m	n	E	C	Number of holes
H1D	50	250	375	600	50	50	-	-	50	4
		300	450	650					100	
		350	525	700					150	
		400	600	750					200	
		450	675	800					250	
		500	750	750					300	
		550	825	720			150	50	-	6
		600	900	690			175			
		650	975	650			200			
		700	1050	610			225			
		750	1125	570			250			
		800	1200	540			275			
		850	1275	500			300			
		900	1350	450			325			
		950	1425	400			350			
		1000	1500	350			375			
H1D	58	300	450	1700	50	50	-	-	100	4
		350	525	1800					150	
		400	600	1850					200	
		450	675	1900					250	
		500	750	1900					300	
		550	825	1850			150	50	-	6
		600	900	1800			175			
		650	975	1750			200			
		700	1050	1700			225			
		750	1125	1650			250			
		800	1200	1600			275			
		850	1275	1530			300			
		900	1350	1460			325			
		950	1425	1390			350			
		1000	1500	1320			375			
		1100	1650	1190			425			
		1200	1800	1060			475			
		1300	1950	920			525			
		1400	2100	760			575			
		1500	2250	600			625			

The load capacity for aluminum is 40 % and for stainless steel 60 % of the stated values, if available in this material variant (see Technical features overview).

Tab. 32

H1D075

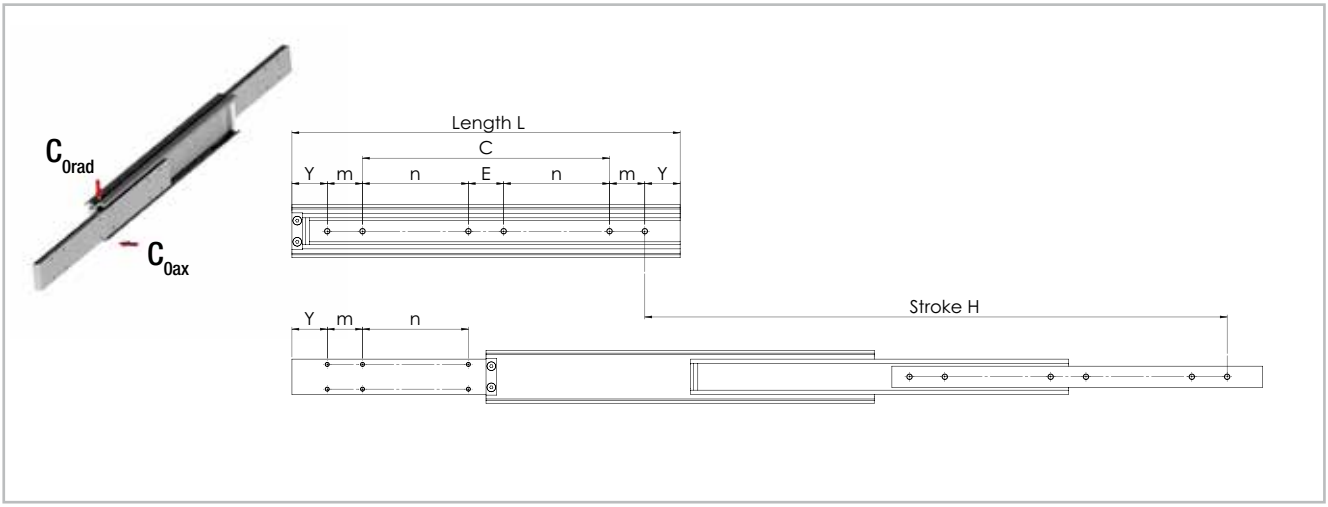

All dimensions are indicated in mm

Fig. 78

Type	Size	Length L [mm]	Stroke H [mm]	Load capacity per pair C_{0rad} [N]	Y	m	n	E	C	Number of holes	
										M6	M8
H1D	75	300	450	2400	50	50	-	-	100	8	4
		350	525	2500					150		
		400	600	2550					200		
		450	675	2600					250		
		500	750	2600					300		
		550	825	2550			150	50	-	12	6
		600	900	2500			175				
		650	975	2450			200				
		700	1050	2400			225				
		750	1125	2350			250				
		800	1200	2300			275				
		850	1275	2250			300				
		900	1350	2200			325				
		950	1425	2150			350				
		1000	1500	2100			375				
		1100	1650	2000			425				
		1200	1800	1850			475				
		1300	1950	1700			525				
		1400	2100	1550			575				
		1500	2250	1400			625				

The load capacity for aluminum is 40 % and for stainless steel 60 % of the stated values, if available in this material variant (see Technical features overview).

Tab. 33

H1D

H1D045
H1D050
H1D058

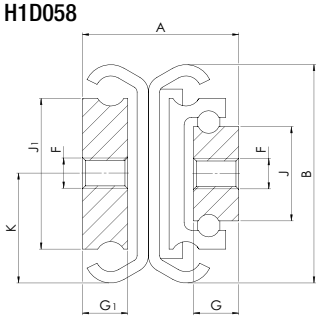

H1D075

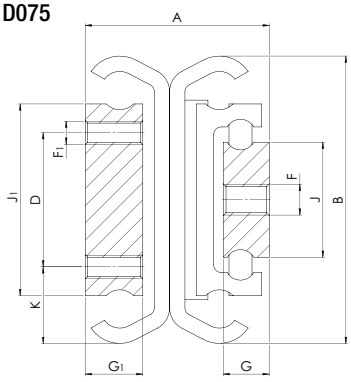

All dimensions are indicated in mm

Fig. 79

Type	Size	A	B	J	J1	G	G1	K	D	F	F1	Weight [kg/m]
H1D	45	36	45	16	30	10	10	22.5	-	M6	-	7.80
	50	37.5	50	20	35	12	10	25				9.60
	58	41.5	58	25	40	12	12	29		M8		8.80
	75	48	75	30	50		15	20	35		M6	18.35

Tab. 34

H1C075

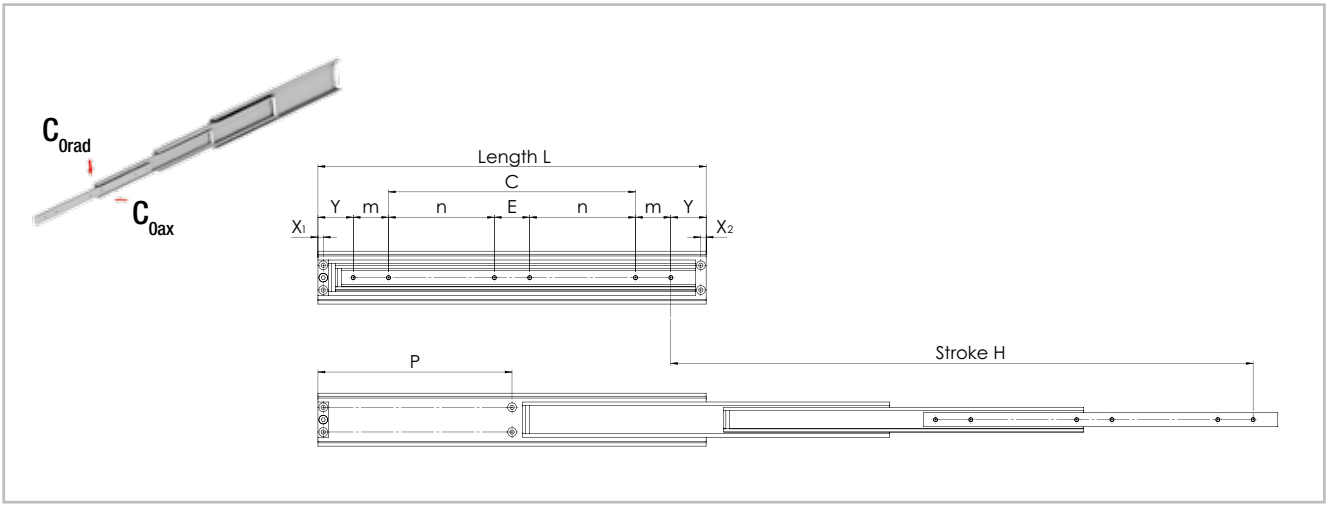

All dimensions are indicated in mm

Fig. 80

Type	Size	Length L [mm]	Stroke H [mm]	Load capacity per pair C_{0rad} [N]	X1	X2	Y	m	n	E	C	P	Number of holes
H1C	75	300	450	1200	7.5	7.5	50	50	-	50	100	-	4
		350	525	1250							150		
		400	600	1300							200		
		450	675	1350							250		
		500	750	1300							300		
		550	825	1200					150		-	275	6
		600	900	1150					175			300	
		650	975	1100					200			325	
		700	1050	1050					225			350	
		750	1125	1000					250			325	
		800	1200	950					275			400	
		850	1275	900					300			425	
		900	1350	850					325			450	
		950	1425	800					350			475	
		1000	1500	750					375			500	
		1100	1650	650					425			550	
		1200	1800	550					475			600	
		1300	1950	450					525			650	
		1400	2100	350					575			700	
		1500	2250	200					325			750	

The load capacity for aluminum is 40 % and for stainless steel 60 % of the stated values, if available in this material variant (see Technical features overview).

Tab. 35

H1C075

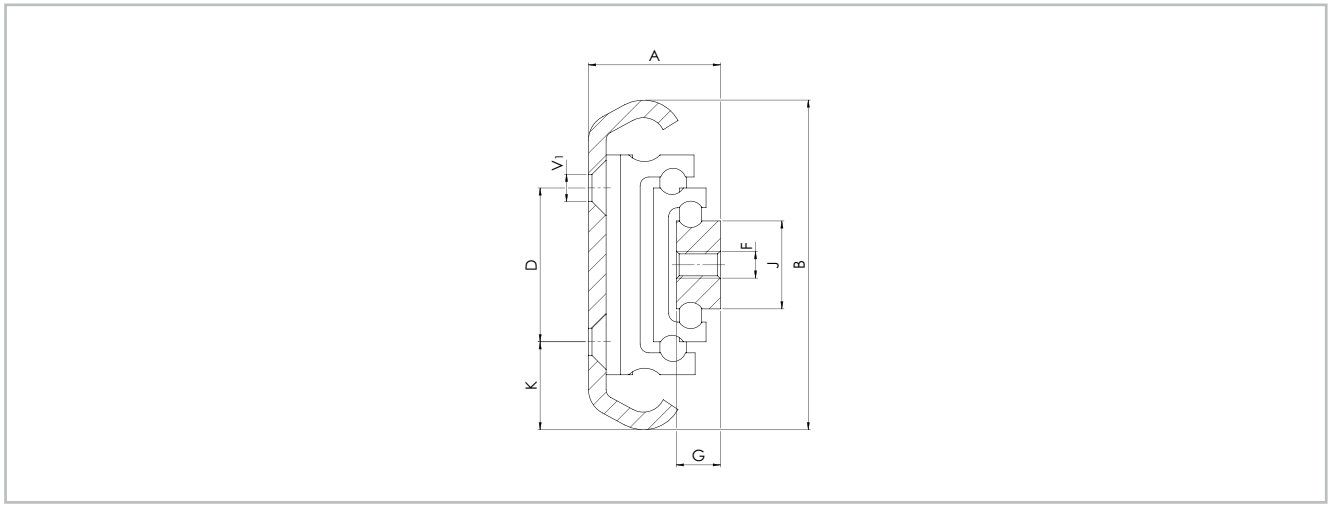

Fig. 81

All dimensions are indicated in mm
V1 Mounting holes (V) for countersunk screws according to DIN 7991/ISO 10642

Type	Size	A	B	J	G	K	D	F	V1	Weight [kg/m]
H1C	75	30	75	20	10	20	35	M6	M6	8.60

Tab. 36

H1T060, H1T080

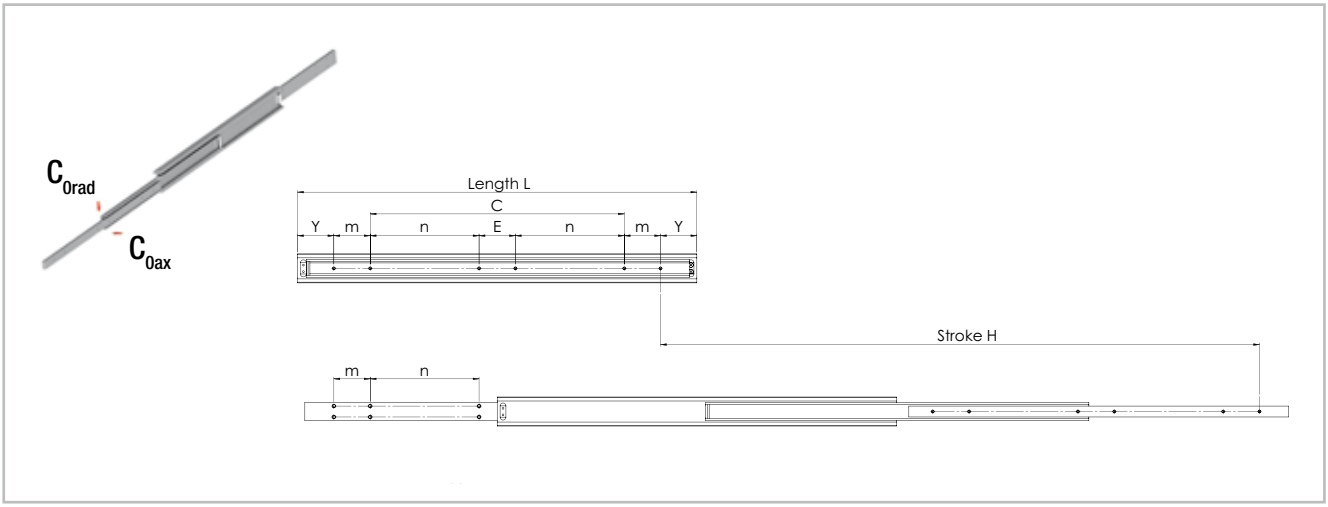

All dimensions are indicated in mm

Fig. 82

Type	Size	Length L [mm]	Stroke H [mm]	Load capacity per pair C_{0rad} [N]	Y	m	n	E	C	Number of holes	
										M6	M8
H1T	60	300	450	2400	50	50	-	-	100	8	4
		350	525	2500					150		
		400	600	2550					200		
		450	675	2600					250		
		500	750	2600					300		
		550	825	2550			150	50	-	12	6
		600	900	2500			175				
		650	975	2450			200				
		700	1050	2400			225				
		750	1125	2350			250				
		800	1200	2300			275				
		850	1275	2250			300				
		900	1350	2200			325				
		950	1425	2150			350				
		1000	1500	2100			375				
		1100	1650	2000			425				
		1200	1800	1850			475				
		1300	1950	1700			525				
		1400	2100	1550			575				
		1500	2250	1400			625				

The load capacity for aluminum is 40 % and for stainless steel 60 % of the stated values, if available in this material variant (see Technical features overview).

Tab. 37

Type	Size	Length L [mm]	Stroke H [mm]	Load capacity per pair C_{0rad} [N]	Y	m	n	E	C	Number of holes	
										M8	M10
H1T	80	500	750	3100	100	100	-	-	100	4	8
		550	825	3150					150		
		600	900	3200					200		
		650	975	3150					250		
		700	1050	3100					300		
		750	1125	3000					350		
		800	1200	2900					400		
		850	1275	2800					450		
		900	1350	2700					500		
		950	1425	2600					550		
		1000	1500	2500					600		
		1100	1650	2280			300	100	-	6	12
		1200	1800	2060			350				
		1300	1950	1840			400				
		1400	2100	1620			450				
		1500	2250	1400			500				

The load capacity for aluminum is 40 % and for stainless steel 60 % of the stated values, if available in this material variant (see Technical features overview).

Tab. 38

H1T100, H1T150

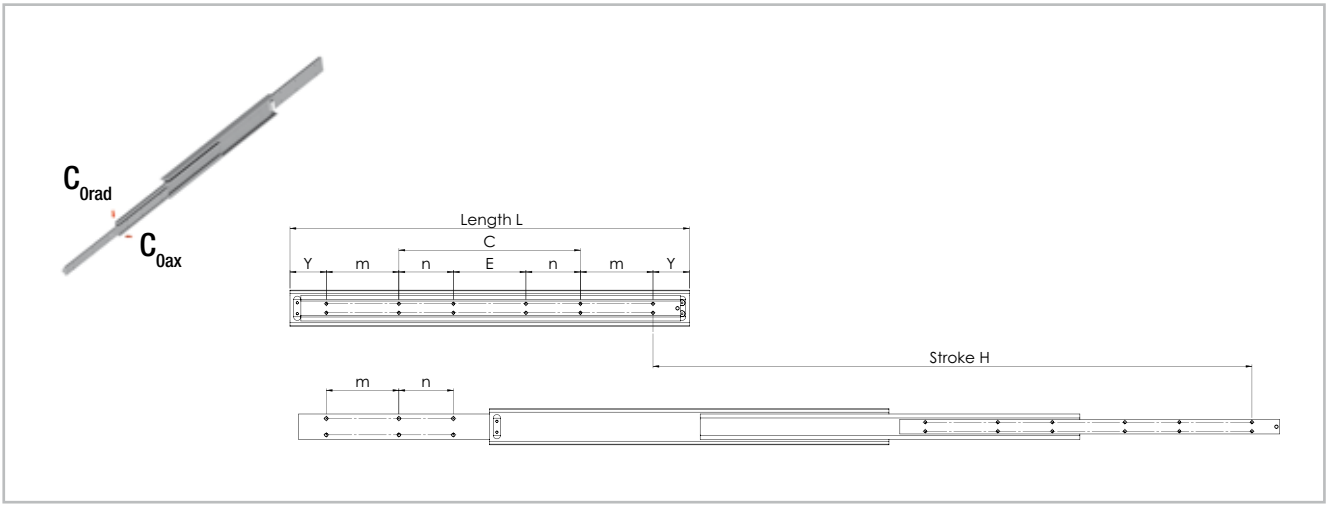

All dimensions are indicated in mm

Fig. 83

Type	Size	Length L [mm]	Stroke H [mm]	Load capacity per pair C_{0rad} [N]	Y	m	n	E	C	Number of holes
H1T	100	700	1050	5500	100	200	-	-	100	8
		750	1125	5500					150	
		800	1200	5300					200	
		850	1275	5100					250	
		900	1350	4700					300	
		950	1425	4500					350	
		1000	1500	4300					400	
		1100	1650	4000			150	200	-	12
		1200	1800	3700			200			
		1300	1950	3400			250			
		1400	2100	3100			300			
		1500	2250	2900			350			
		1600	2400	2600			400			
		1700	2550	2300			450			
		1800	2700	2000			500			
		1900	2850	1700			550			
		2000	3000	1400			600			

The load capacity for aluminum is 40 % and for stainless steel 60 % of the stated values, if available in this material variant (see Technical features overview).

Tab. 39

Other sizes and versions are available on request

Type	Size	Length L [mm]	Load capacity per pair C_{0rad} [N]
H1T	150	700	7000
		⋮	⋮
		2000	2300

Tab. 40

The load capacity for aluminum is 40 % and for stainless steel 60 % of the stated values, if available in this material variant (see Technical features overview).

H1T

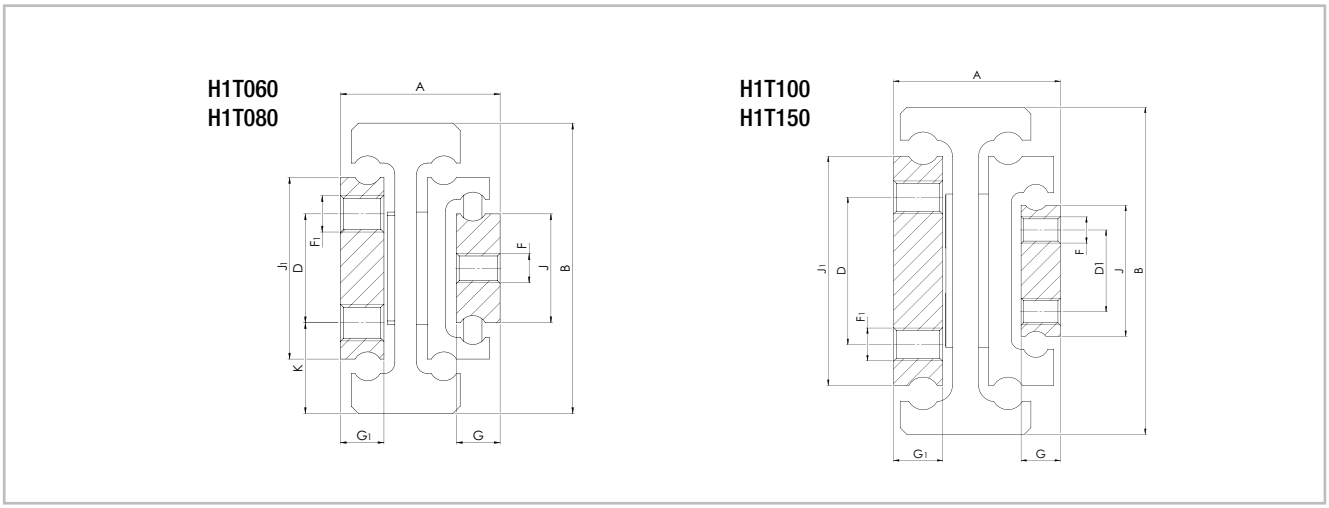

All dimensions are indicated in mm

Fig. 84

Type	Size	A	B	J	J1	G	G1	K	D	D1	F	F1	Weight [kg/m]
H1T	60	40.5	60	25	40	12	10	19	22	-	M8	M6	12.90
	80	44	80	30	50		12	25	30			M10	18.60
	100	51	100	40	70		15	27.5	45	25			28.60

Tab. 41

H2H080

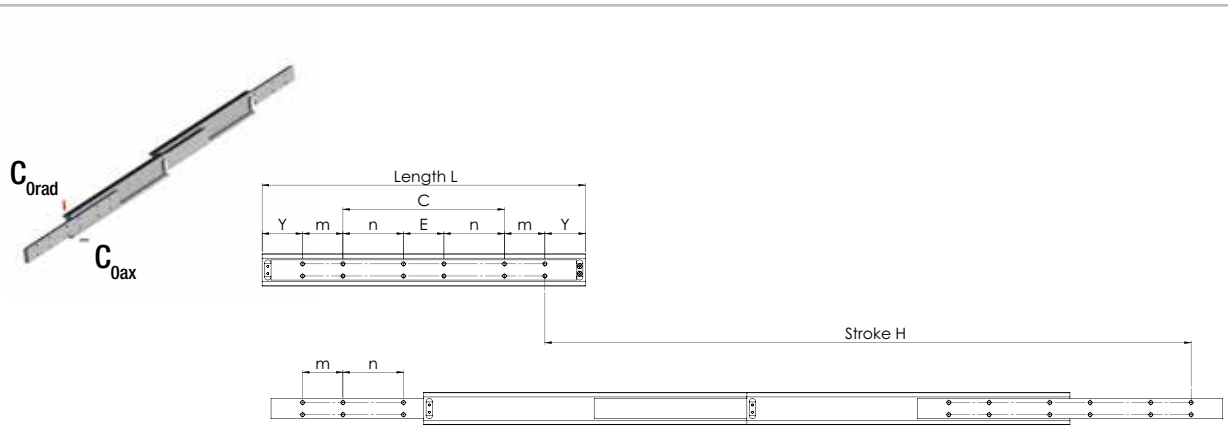

All dimensions are indicated in mm

Fig. 85

Type	Size	Length L [mm]	Stroke H [mm]	Load capacity per pair C_{0rad} [N]	Y	m	n	E	C	Number of holes
H2H	80	500	1000	4850	100	100	-	-	100	8
		550	1100	5200					150	
		600	1200	5400					200	
		650	1300	5500					250	
		700	1400	5350					300	
		750	1500	5200					350	
		800	1600	5050			150	100	-	12
		850	1700	4850			175			
		900	1800	4650			200			
		950	1900	4450			225			
		1000	2000	4250			250			
		1100	2200	3750			300			
		1200	2400	3250			350			
		1300	2600	3100			400			
		1400	2800	3000			450			
		1500	3000	2800			500			

The load capacity for aluminum is 40 % and for stainless steel 60 % of the stated values, if available in this material variant (see Technical features overview).

Tab. 42

H2H080

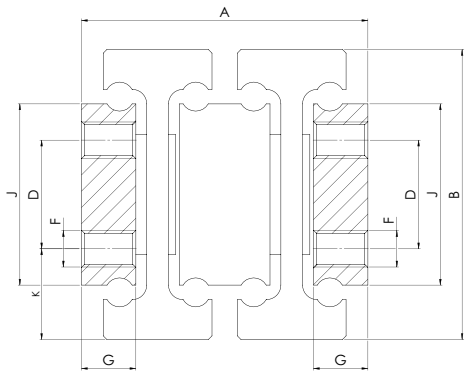

All dimensions are indicated in mm

Fig. 86

Type	Size	A	B	J	G	K	D	F	Weight [kg/m]
H2H	80	79+-1	80	50	15	25	30	M10	34.80

Tab. 43

Heavy load extension

LTH30 RF

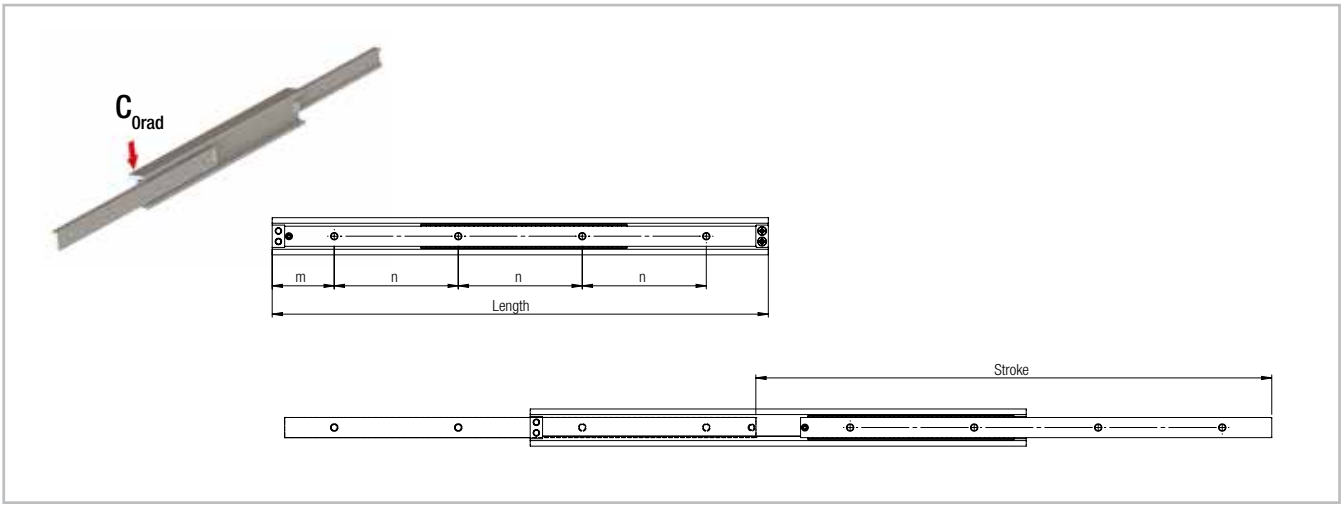

Fig. 87

Type	Size	Length L [mm]	Stroke H [mm]	Load capacity per pair C_{0rad} [N]	Load capacity per pair C_{0ax} [N]	m [mm]	n [mm]	Number of holes
LTH	30	250	285	404	on request	25	100	3
		300	323	1008		50		
		350	377	1042		25		4
		400	416	1136		50		
		450	485	1164		25		5
		500	523	1470		50		
		550	577	1464		25		6
		600	615	1402		50		
		650	685	1230		25		7
		700	723	1186		50		
		750	777	1100		25		8
		800	815	1066		50		
		850	884	962		25		9
		900	923	936		50		
		950	977	882		25		10
		1000	1015	858		50		
		1050	1084	792		25		11
		1100	1123	772		50		
		1150	1176	736		25		12
		1200	1215	720		50		

Tab. 44

LTH30 KF

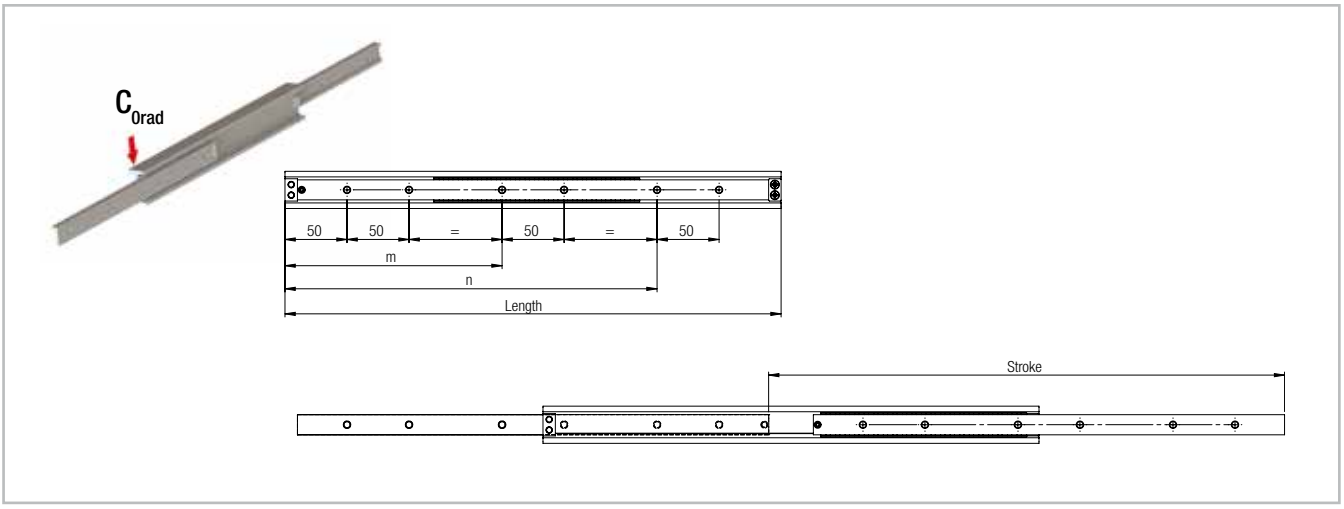

Fig. 88

Type	Size	Length L [mm]	Stroke H [mm]	Load capacity per pair C_{0rad} [N]	Load capacity per pair C_{0ax} [N]	m [mm]	n [mm]	Number of holes
LTH	30	250	285	404	on request	-	150	4
		300	323	1008			200	
		350	377	1042			250	6
		400	416	1136		175	300	
		450	485	1164		200	350	
		500	523	1470		225	400	
		550	577	1464		250	450	
		600	615	1402		275	500	
		650	685	1230		300	550	
		700	723	1186		325	600	
		750	777	1100		350	650	
		800	815	1066		375	700	
		850	884	962		400	750	
		900	923	936		425	800	
		950	977	882		450	850	
		1000	1015	858		475	900	
		1050	1084	792		500	950	
		1100	1123	772		525	1000	
		1150	1176	736		550	1050	
		1200	1215	720		575	1100	

Tab. 45

LTH30 S

… S version with reinforced and dampened end stops made of stainless steel

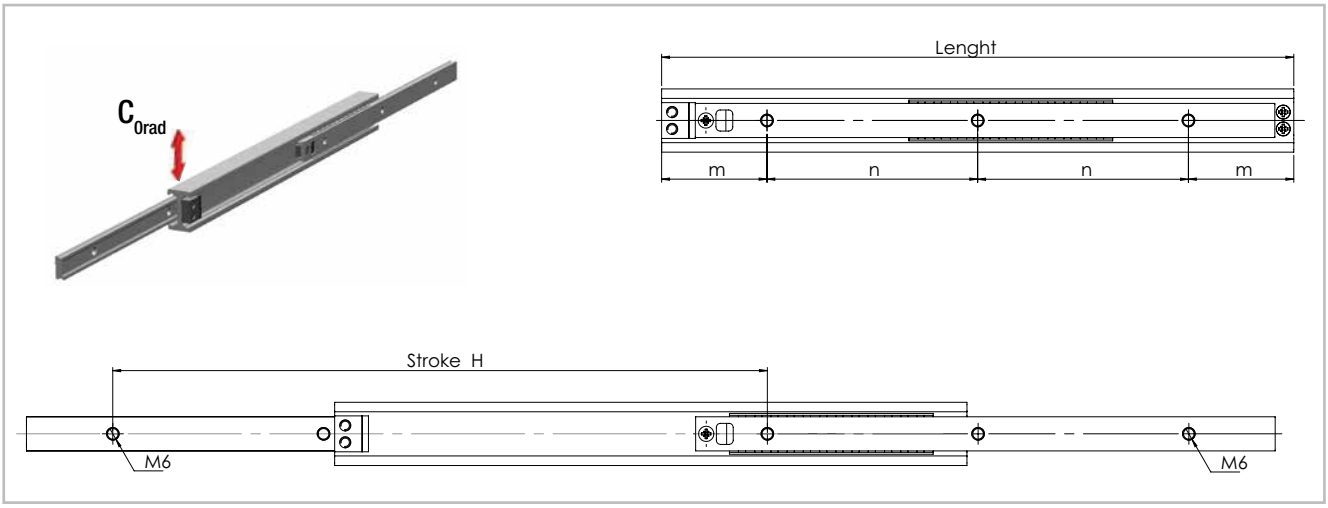

Fig. 89

Type	Size	Length L [mm]	Stroke H [mm]	Load capacity per pair C_{0rad} [N]	Load capacity per pair C_{0ax} [N]	m [mm]	n [mm]	Number of holes
LTH...S	30	300	310	816	on request	50	100	3
		350	364	880		75		
		400	402	994		50		4
		450	472	1032		75		
		500	510	1330		50		5
		550	564	1498		75		
		600	618	1392		50		6
		650	671	1276		75		
		700	725	1178		50		7
		750	764	1138		75		
		800	817	1060		50		8
		850	871	992		75		
		900	925	932		50		9
		950	979	878		75		
		1000	1017	856		50		10
		1050	1071	810		75		
		1100	1109	790		50		11
		1150	1179	732		75		
		1200	1217	718		50		12

Tab. 46

LTH45 RF

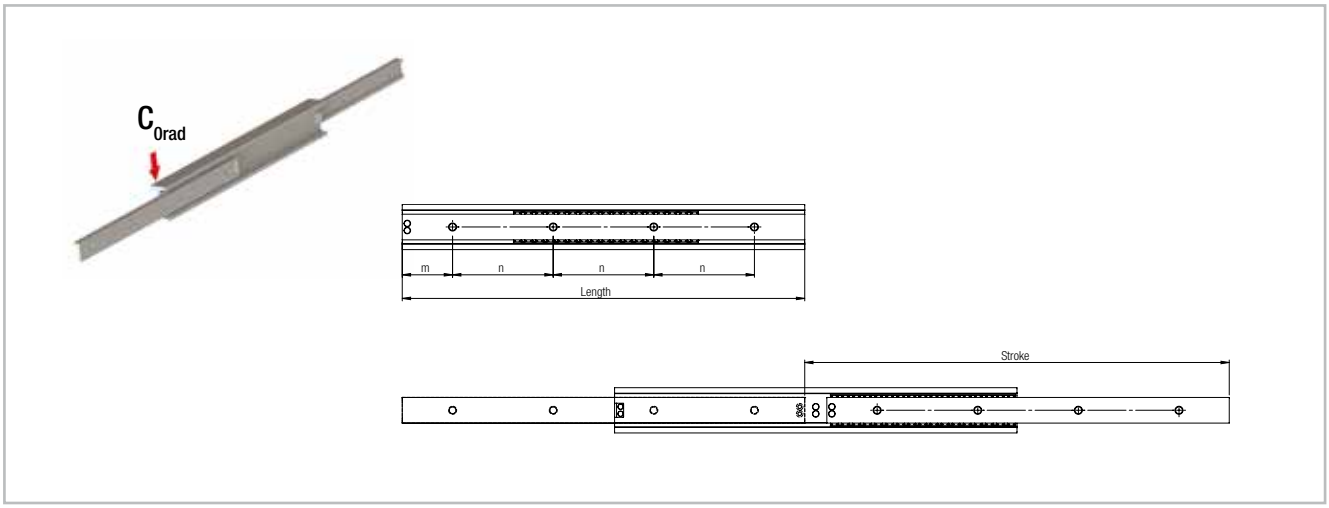

Fig. 90

Type	Size	Length L [mm]	Stroke H [mm]	Load capacity per pair		m [mm]	n [mm]	Number of holes
				C_{0rad} [N]	C_{0ax} [N]			
LTH	45	250	276	2610	on request	25	100	3
		300	310	2824		50		
		350	388	2820		25		4
		400	422	2842		50		
		450	478	2864		25		5
		500	512	2900		50		
		550	590	2764		25		6
		600	624	3032		50		
		650	680	3252		25		7
		700	714	3346		50		
		750	770	3084		25		8
		800	826	2860		50		
		850	882	2666		25		9
		900	916	2614		50		
		950	972	2450		25		10
		1000	1028	2306		50		
		1050	1084	2178		25		11
		1100	1118	2144		50		
		1150	1174	2034		25		12
		1200	1230	1934		50		
		1250	1286	1842		25		13
		1300	1320	1818		50		
		1350	1376	1738		25		14
		1400	1410	1716		50		
		1450	1488	1596		25		15
		1500	1522	1578		50		

Tab. 47

LTH45 KF

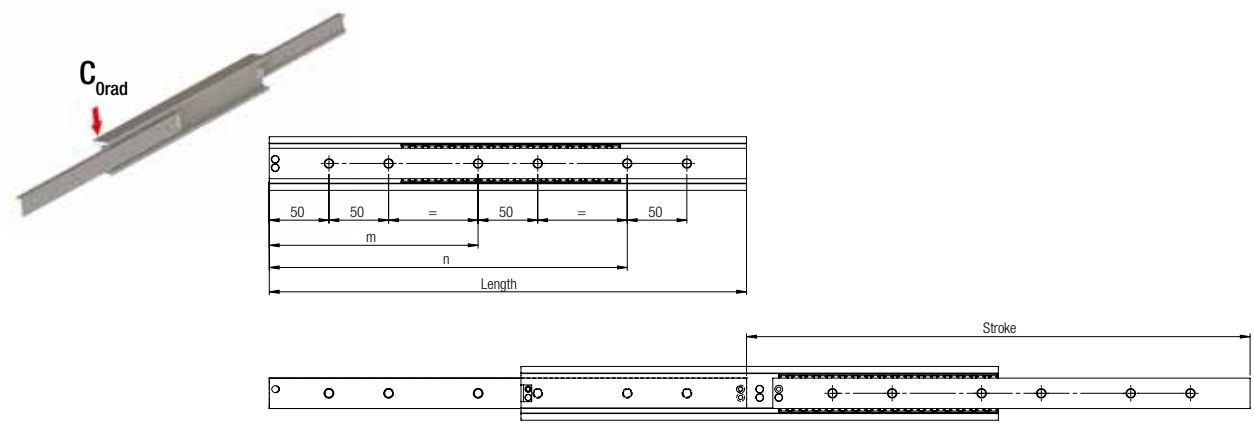

Fig. 91

Type	Size	Length L [mm]	Stroke H [mm]	Load capacity per pair		m [mm]	n [mm]	Number of holes
				C_{0rad} [N]	C_{0ax} [N]			
LTH	45	250	276	2610	on request	-	150	4
		300	310	2824			200	
		350	388	2820			250	
		400	422	2842		175	300	6
		450	478	2864		200	350	
		500	512	2900		225	400	
		550	590	2764		250	450	
		600	624	3032		275	500	
		650	680	3252		300	550	
		700	714	3346		325	600	
		750	770	3084		350	650	
		800	826	2860		375	700	
		850	882	2666		400	750	
		900	916	2614		425	800	
		950	972	2450		450	850	
		1000	1028	2306		475	900	
		1050	1084	2178		500	950	
		1100	1118	2144		525	1000	
		1150	1174	2034		550	1050	
		1200	1230	1934		575	1100	
		1250	1286	1842		600	1150	
		1300	1320	1818		625	1200	
		1350	1376	1738		650	1250	
		1400	1410	1716		675	1300	
		1450	1488	1596		700	1350	
		1500	1522	1578		725	1400	

Tab. 48

LTH45 S

… S version with reinforced and dampened end stops made of stainless steel

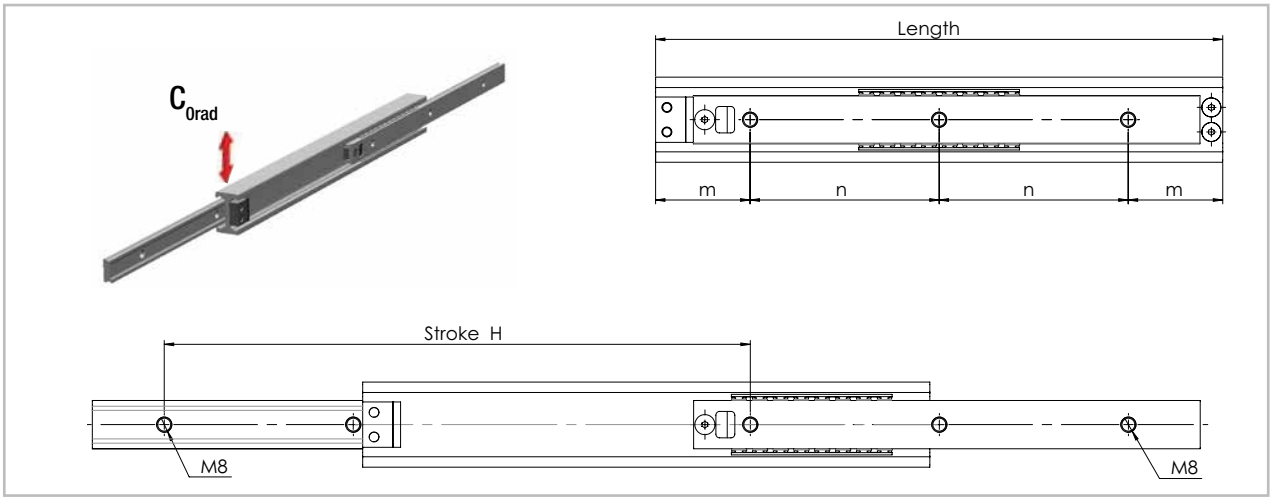

Fig. 92

Type	Size	Length L [mm]	Stroke H [mm]	Load capacity per pair C_{0rad} [N]	Load capacity per pair C_{0ax} [N]	m [mm]	n [mm]	Number of holes
LTH...S	45	300	310	1316	on request	50	100	3
		350	366	1832		75		
		400	422	1666		50		4
		450	456	2154		75		
		500	512	1972		50		5
		550	568	2200		75		
		600	624	2204		50		6
		650	680	2426		75		
		700	714	2942		50		7
		750	770	3084		75		
		800	826	2860		50		8
		850	882	2666		75		
		900	916	2614		50		9
		950	972	2450		75		
		1000	1028	2306		50		10
		1050	1084	2178		75		
		1100	1118	2144		50		11
		1150	1174	2034		75		
		1200	1230	1934		50		12
		1250	1286	1842		75		
		1300	1320	1818		50		13
		1350	1376	1738		75		
		1400	1410	1716		50		14
		1450	1488	1596		75		
		1500	1522	1578		50		15

Tab. 49

LTH

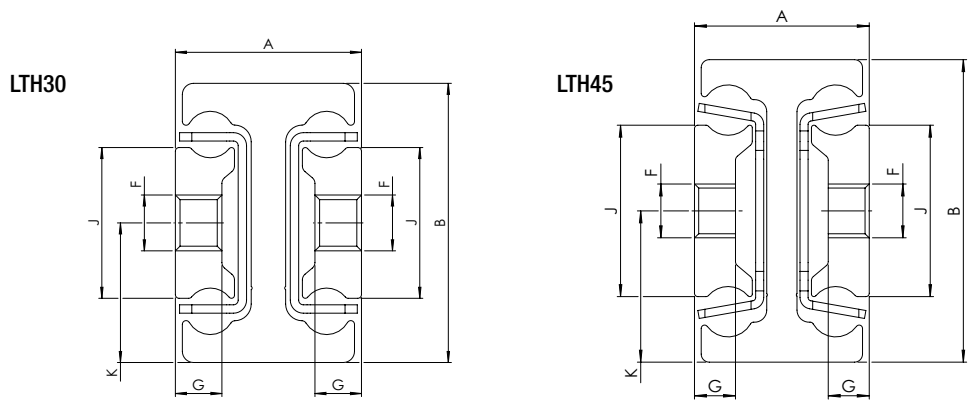

All dimensions are indicated in mm

Fig. 93

Type	Size	A	B	J	G	K	F	Weight [kg/m]
LTH	30	20	30	16.2	5.0	15.0	M6	3.5
	45	26	45	25.5	6.1	22.5	M8	6.0

Tab. 50

HGT060, HGT080, HGT100, HGT120, HGT150, HGT200, HGT240

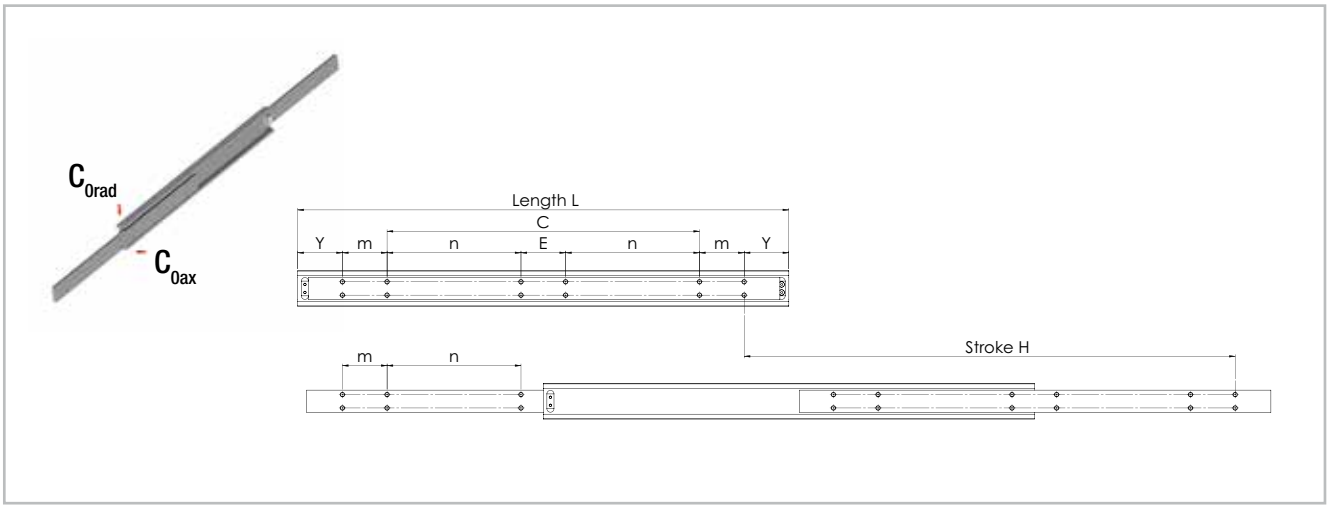

All dimensions are indicated in mm

Fig. 94

Type	Size	Length L [mm]	Stroke H [mm]	Load capacity per pair C_{0rad} [N]	Load capacity per pair C_{0ax} [N]	Y	m	n	E	C	Number of holes
HGT	60	400	400	5250	60 % C_{0rad}	50	50	-	-	200	8
		450	450	5350						250	
		500	500	5400						300	
		550	550	5500				150	50	-	12
		600	600	5400				175			
		650	650	5350				200			
		700	700	5250				225			
		750	750	5100				250			
		800	800	4900				275			
		850	850	4700				300			
		900	900	4500				325			
		950	950	4300				350			
		1000	1000	4050				375			
		1100	1100	3700				425			
		1200	1200	3300				475			
		1300	1300	2900				525			
		1400	1400	2500				575			
		1500	1500	2100				625			

The load capacity for aluminum is 40 % and for stainless steel 60 % of the stated values, if available in this material variant (see Technical features overview).

Tab. 51

Type	Size	Length L [mm]	Stroke H [mm]	Load capacity per pair C_{0rad} [N]	Load capacity per pair C_{0ax} [N]	Y	m	n	E	C	Number of holes
HGT	80	500	500	9000	60 % C_{0rad}	100	100	-	-	100	8
		550	550	9250						150	
		600	600	9350						200	
		650	650	9200						250	
		700	700	9050						300	
		750	750	8800						350	
		800	800	8600						400	
		850	850	8350						450	
		900	900	8100						500	
		950	950	7850						550	
		1000	1000	7550						600	
		1100	1100	7150				300	100	-	12
		1200	1200	6700				350			
		1300	1300	6200				400			
		1400	1400	5700				450			
		1500	1500	5200				500			
		1600	1600	4600				550			
		1700	1700	4100				600			
		1800	1800	3600				650			
		1900	1900	3000				700			
		2000	2000	2500				750			

The load capacity for aluminum is 40 % and for stainless steel 60 % of the stated values, if available in this material variant (see Technical features overview).

Tab. 52

Type	Size	Length L [mm]	Stroke H [mm]	Load capacity per pair C_{0rad} [N]	Load capacity per pair C_{0ax} [N]	Y	m	n	E	C	Number of holes
HGT	100	700	700	11000	60 % C_{0rad}	100	200	-	-	100	8
		750	750	10750						150	
		800	800	10500						200	
		850	850	10250						250	
		900	900	10000						300	
		950	950	9750						350	
		1000	1000	9500						400	
		1100	1100	9000				150	200	-	12
		1200	1200	8500				200			
		1300	1300	7900				250			
		1400	1400	7300				300			
		1500	1500	6700				350			
		1600	1600	6100				400			
		1700	1700	5450				450			
		1800	1800	4800				500			
		1900	1900	4100				550			
		2000	2000	3400				600			

The load capacity for aluminum is 40 % and for stainless steel 60 % of the stated values, if available in this material variant (see Technical features overview).

Tab. 53

Other sizes and versions are available on request

Type	Size	Length L [mm]	Load capacity per pair C_{0rad} [N]	Load capacity per pair C_{0ax} [N]
HGT	120	700	11500	60 % C_{0rad}
		⋮	⋮	
		2000	4700	
HGT	150	700	13900	60 % C_{0rad}
		⋮	⋮	
		2000	7000	
HGT	200	700	15000	60 % C_{0rad}
		⋮	⋮	
		2300	6700	

The load capacity for aluminum is 40 % and for stainless steel 60 % of the stated values, if available in this material variant (see Technical features overview).

Tab. 54

Type	Size	Length	Load capacity per pair	
		L [mm]	C_{0rad} [N]	C_{0ax} [N]
HGT	240	700	17500	60 % C_{0rad}
		⋮	⋮	
		2000	12500	

Tab. 55

The load capacity for aluminum is 40 % and for stainless steel 60 % of the stated values, if available in this material variant (see Technical features overview).

HGT

HGT060
HGT080
HGT100

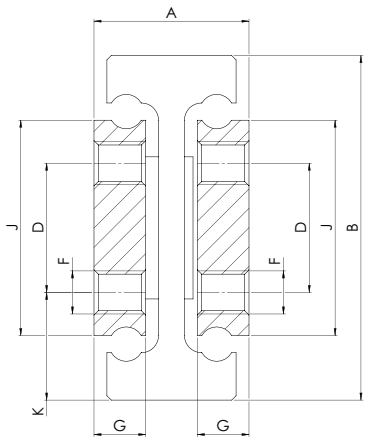

All dimensions are indicated in mm

Fig. 95

Type	Size	A	B	J	G	K	D	F	Weight [kg/m]
HGT	60	32	60	40	10	19	22	M6	11.70
	80	38	80	50	12	25	30	M10	17.50
	100	44	100	70	15	27.5	45		27.60

Tab. 56

S-profiles

LTF44

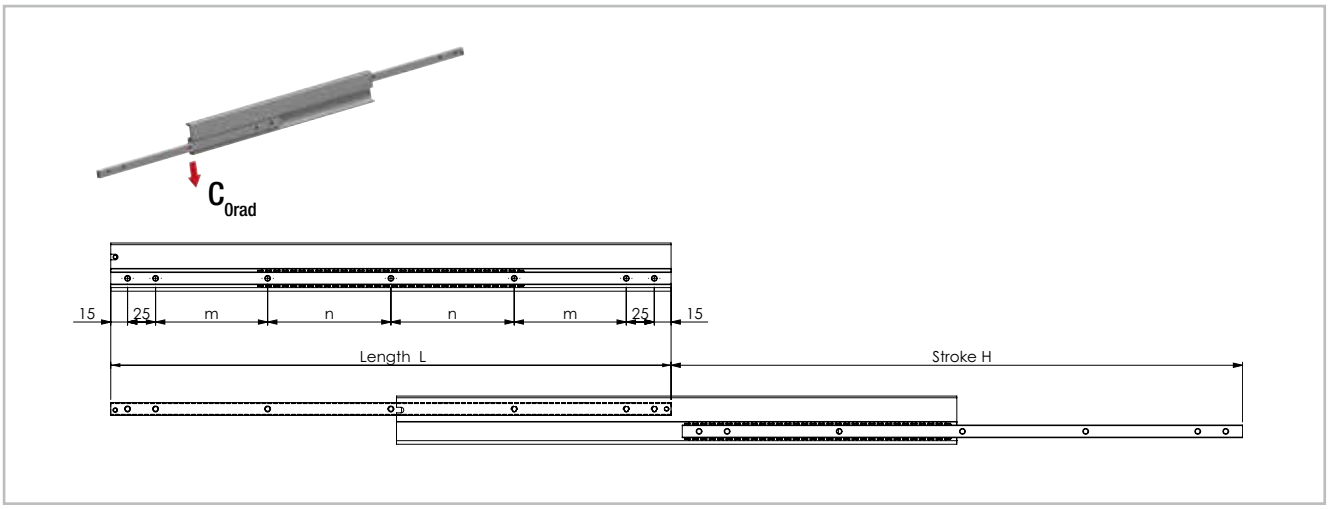

All dimensions are indicated in mm

Fig. 96

Type	Size	Length L [mm]	Stroke H [mm]	Load capacity per pair C_{0rad} [N]	Fixed and moving rails m [mm]	Fixed and moving rails n [mm]	Number of holes
LTF	44	200	210	228	60	-	5
		225	235	260	72.5		
		250	260	288	85		
		275	285	324	97.5		
		300	310	360	110		
		325	335	392	122.5		
		350	360	420	135		
		375	385	452	147.5		
		400	410	492	160		
		425	435	524	172.5		
		450	460	552	185		
		500	510	624	100	110	7
		550	560	684		135	
		600	610	768		160	
		650	660	816		185	
		700	710	888	150	160	
		750	760	948		185	
		800	810	1020		210	
		850	860	1080		235	
		900	910	1152		260	
		950	960	1224		285	
		1000	1010	1296		310	

Tab. 57

LTF44

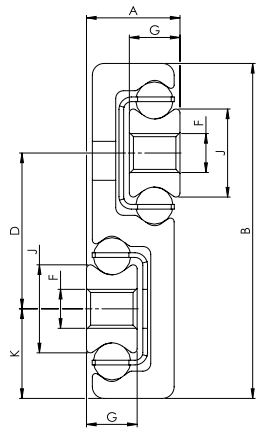

All dimensions are indicated in mm

Fig. 97

Type	Size	A	B	J	G	K	D	F	Weight [kg/m]
LTF44	44	12	43	11.3	6.5	11.5	20	M5	2.7

Tab. 58

HGS060, HGS080, HGS100

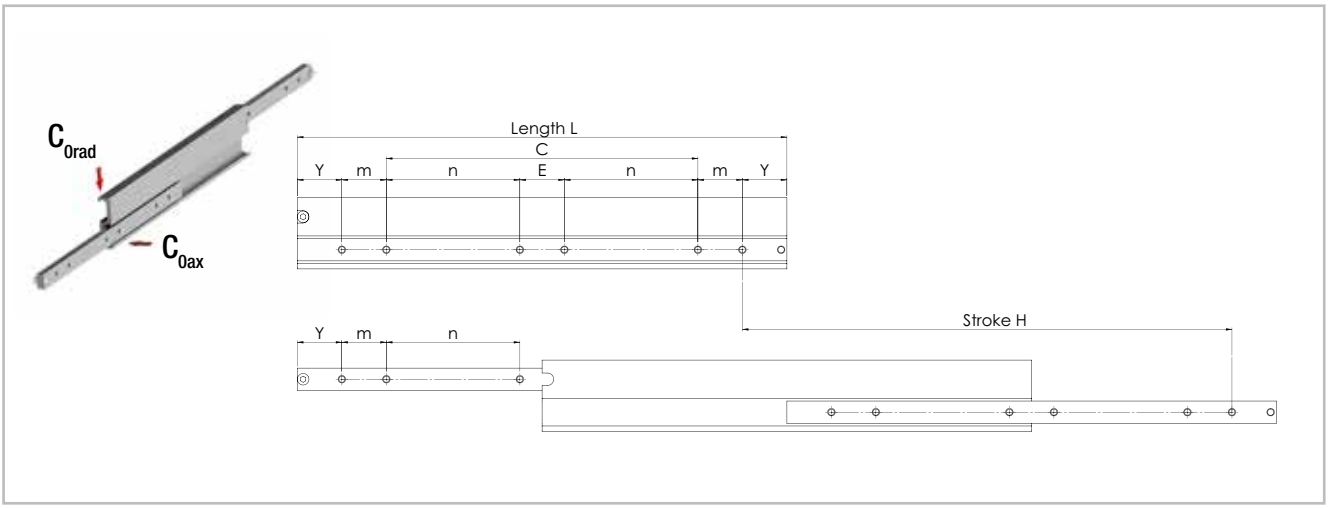

All dimensions are indicated in mm

Fig. 98

Type	Size	Length L [mm]	Stroke H [mm]	Load capacity per pair C_{0rad} [N]	Y	m	n	E	C	Number of holes
HGS	60	250	250	1000	50	50	-	-	50	4
		300	300	1250					100	
		350	350	1350					150	
		400	400	1400					200	
		450	450	1400					250	
		500	500	1400					300	
		550	550	1350			150	50	-	6
		600	600	1300			175			
		650	650	1250			200			
		700	700	1200			225			
		750	750	1150			250			
		800	800	1050			275			
		850	850	950			300			
		900	900	850			325			
		950	950	750			350			
		1000	1000	650			375			

The load capacity for aluminum is 40 % and for stainless steel 60 % of the stated values, if available in this material variant (see Technical features overview).

Tab. 59

Type	Size	Length L [mm]	Stroke H [mm]	Load capacity per pair C_{0rad} [N]	Y	m	n	E	C	Number of holes
HGS	80	250	250	1600	50	50	-	-	50	4
		300	300	2000					100	
		350	350	2200					150	
		400	400	2350					200	
		450	450	2450					250	
		500	500	2450					300	
		550	550	2450			150	50	-	6
		600	600	2400			175			
		650	650	2300			200			
		700	700	2200			225			
		750	750	2100			250			
		800	800	2000			275			
		850	850	1900			300			
		900	900	1800			325			
		950	950	1650			350			
		1000	1000	1500			375			
HGS	100	400	400	3200	50	50	-	-	200	4
		450	450	3500					250	
		500	500	3600					300	
		550	550	3600			150	50	-	6
		600	600	3550			175			
		650	650	3450			200			
		700	700	3300			225			
		750	750	3150			250			
		800	800	3000			275			
		850	850	2850			300			
		900	900	2700			325			
		950	950	2550			350			
		1000	1000	2400			375			
		1100	1100	2250			425			
		1200	1200	2100			475			
		1300	1300	1950			525			
		1400	1400	1850			575			
		1500	1500	1600			625			

The load capacity for aluminum is 40 % and for stainless steel 60 % of the stated values, if available in this material variant (see Technical features overview).

Tab. 60

HGS

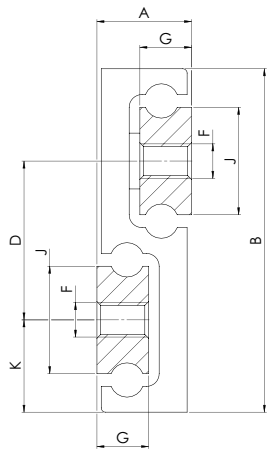

All dimensions are indicated in mm

Fig. 99

Type	Size	A	B	J	G	K	D	F	Weight [kg/m]
HGS	60	17	60	16	10	16	28	M6	6.00
	80	22	80	25	12	21.5	37	M8	10.50
	100	24	100	32		26	48		14.20

Tab. 61

Accessories

Available options (depending on telescope version)

Locking

Locking mechanisms make it possible to lock the Hegra rails in the end position. This prevents inadvertent extension or retraction of the rail in any case. Locking mechanisms can be implemented as locking bolts or bars. This ensures personal safety and protection of materials, especially in moving installations, as in vehicles. For models HGT with locking please observe right or left side use.



Fig. 100



Fig. 101

Driving disc

In the full extension rails with dual stroke the intermediate element does not follow a particular order. The exact position of the element is therefore defined only in fully extended condition. The optional driving disc defines the movement of the intermediate element. This prevents unwanted protrusion of the element. An example for use of the driving disc is in warehouse rails, which are extended in both directions.



Fig. 102



Fig. 103

Damping

Hegra telescoping rails can be equipped with damped end stops in closed position. Plastic or elastomer damping elements provide for quieter operation, a softer end stop when pushing in the rail and higher resistance at the end of the stroke.

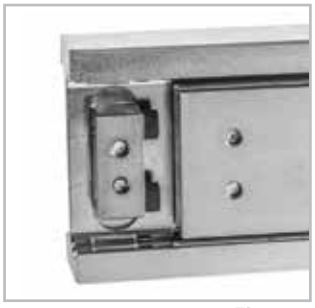

Fig. 104



Fig. 105

Snap

Hegra Rail telescopic guides can be partial with a snap through a ball thrust piece. Thus, an unintended process of the telescope system is avoided.

Note: Not all accessories (interlocks, damping, Drive disk, snap) can be combined with each other and available. (see Technical features overview) Please contact our technical service.

Technical information

Selecting a suitable telescoping rail

To find a telescoping rail that meets your requirements, the following factors must be considered.

- Desired load capacity
- Available sizes (height, width and rail length)
- Required extension type (partial, full extension, etc.)
- Length of travel
- Desired material and surface

Mounting tolerances

Installation length (mm)	≥ 150 < 420	≥ 420 < 1050	≥ 1050 < 2840
Tolerance (mm)	± 0.5	± 0.8	± 1.2

At the installation, width tolerances of ± 0.5 mm for compensating are to be considered. For all other dimensions, the tolerances according to DIN ISO 2768-1 (m) apply.

Life cycle

The life cycle describes the time span from installation to failure of the telescoping rail, due to wear.

The life cycle is affected by the following factors.

- Load
- Assembly precision
- Parallelism when installed in pairs
- Rigidity of the connection construction
- Jolts and vibrations
- Operating temperature
- Lubrication (in accordance with maintenance intervals)

Load capacity

The specified maximum load capacity always refers to one pair of vertically installed telescoping rails. To achieve this capacity, the following requirements must be fulfilled.

- An absolutely rigid connection construction
- Even distribution of the load over the entire length of the moving rail element
- Mounting of the telescoping rails on a flat and rigid surface using all provided mounting holes
- Please be sure to use the correct screw length to prevent damage to the ball cage: shank length of screw < thickness of the moving element
- Vertical installation of telescoping rails

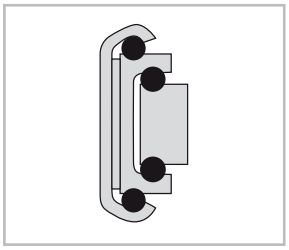

Vertical installation Fig. 106

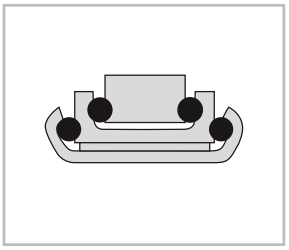

Level installation Fig. 107

If optimal implementation of all of these requirements is not possible, we will be glad to assist you in calculating the actual load capacity.

In case of a level installation of the telescoping rails, only 50 % of the permissible load values is possible, depending on the type.

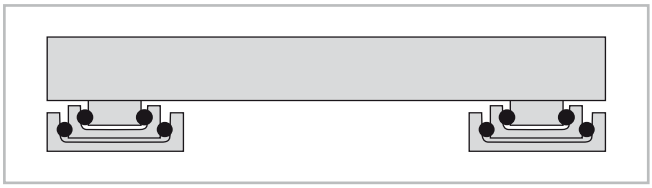

Fig. 108

Deflection

If the rails are installed in pairs and the requirements under “Load capacity” are taken into account, the maximum deflection of steel rails under full load is 1 % of the extended length (stroke). Example: 500 mm length of travel -> max. 5 mm deflection under full load.

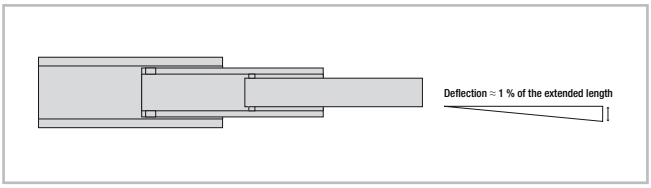

Fig. 109

Operating temperature

The telescoping rails can be used at ambient temperatures from 0 °C to +170 °C (32 °F to +338 °F). At lower temperatures down to -30 °C (-22 °F) or higher temperatures up to +250 °C (+482 °F), please contact our application engineers. These ranges always require the use of a special lubricant.

Corrosion protection

As standard features, all series are zinc electroplated, thick-film passivated and Reach/RoHs compliant. For higher corrosion protection we offer zinc nickel plating with stainless steel balls. Overview of available coatings:

Coating type thickness 12-15µm	Salt-spray test DIN EN ISO 9227	Reach/ RoHS
Thick-film passivated	ca. 400 hours	yes
Zinc nickel	more than 700 h	yes

Tab. 62

Ball cage displacement

The stroke movement of a telescoping rail is achieved by the ball cages, among other elements. You should ensure that the telescoping rail is always fully extended and retracted, since otherwise the ball cages can become displaced. Ball cage displacement occurs as a result of slippage and means that you can achieve the required extension length and the desired closed condition of the telescoping rail only with increased application of force.

Automated systems must have sufficient reserve driving force or an additional maximum stroke must be planned for in order to prevent displacement.

On request we also implement custom design solutions. Feel free to contact us.

Motive force

The motive force is subject to production-related tolerances and is also defined by the load and the deflection of a telescoping rail. Taking into account the load and deflection of a telescoping rail, the closing force is higher than the opening force, since deflection occurs under load and closing takes place by pushing against a slanted plane.

Lubrication

Alternative lubricants, for example for the food industry, or alternate temperature ranges are available on request. Our aluminium or stainless steel telescoping rails are generally delivered without grease.

Maintenance intervals

A visual inspection should be conducted occasionally; foreign particles should be removed and “dry” guide rails should be lightly lubricated with roller bearing grease. This prevents friction, protects the components and prolongs the life of the system. The lubrication intervals are variable and should be determined based on the respective operating conditions such as load, ambient conditions, travel speed, temperature, pollution, etc.

Mounting instructions

- Please use all mounting holes, in addition to screws of the correct length.
- A stable base is necessary for mounting the telescoping rails.
- In the connection construction, be aware that we have switched to counterbores according to DIN 74 Form F and due to the material thickness of our profiles, the head of the countersunk screw protrudes somewhat from the profile, so that the mating piece must have a corresponding counterbore.

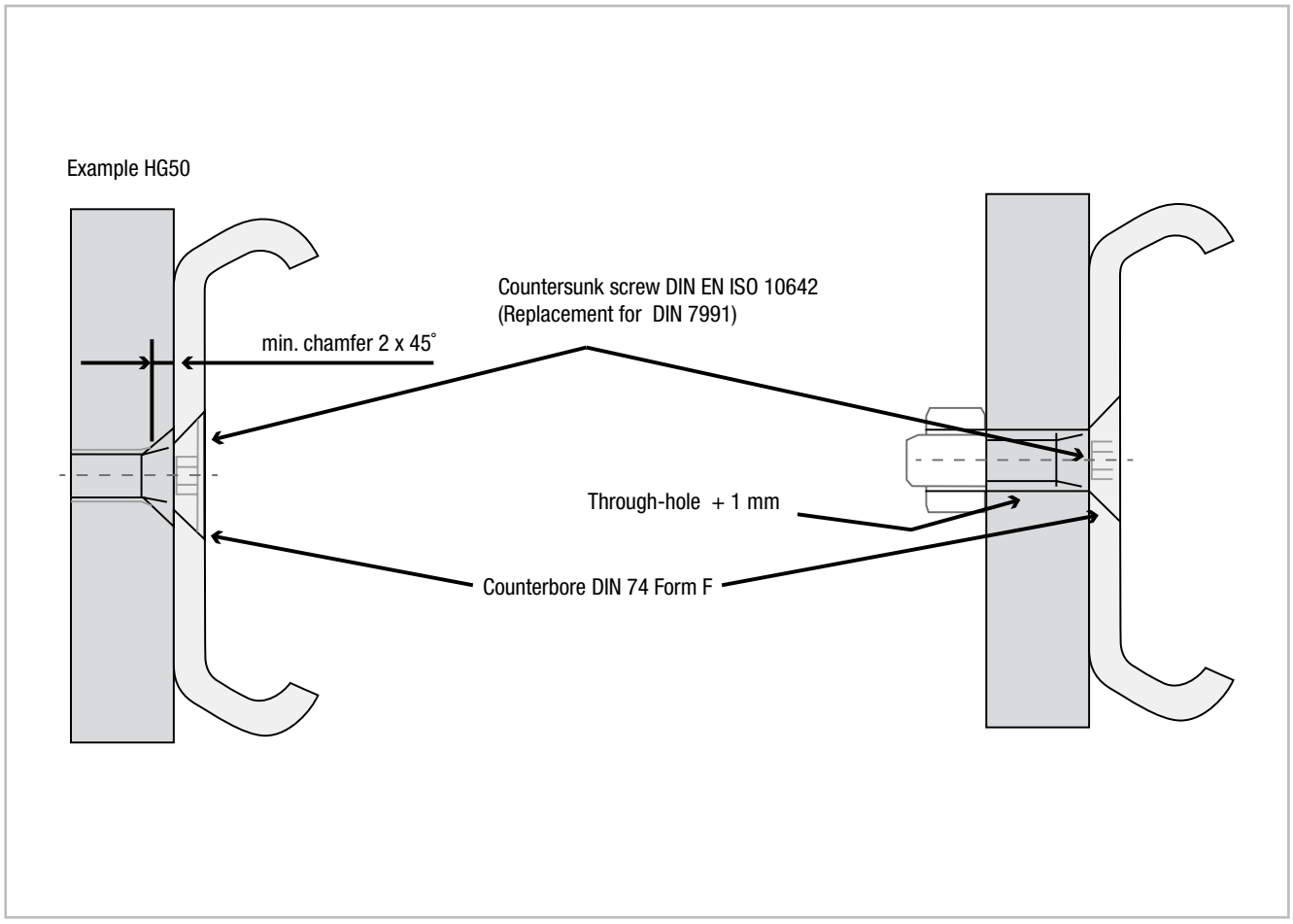

Fig. 110

Potential areas of use

Rail vehicle technology

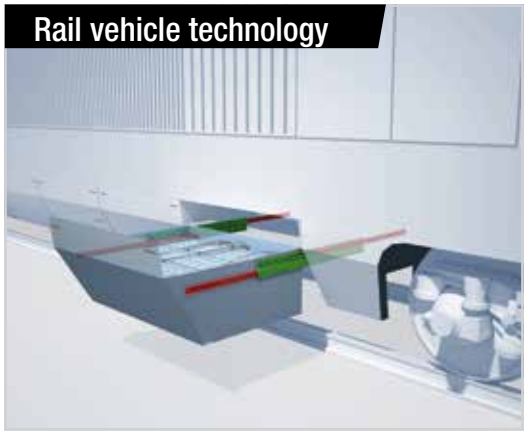

Aviation

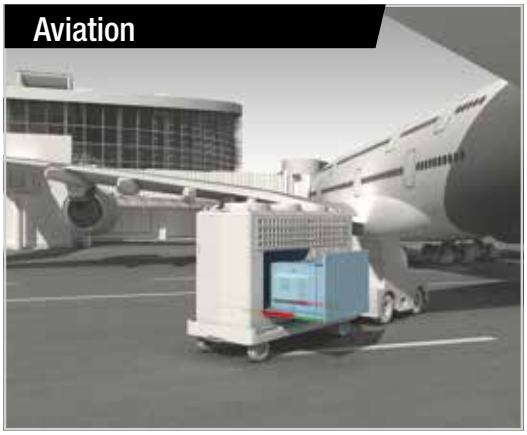

Medical technology

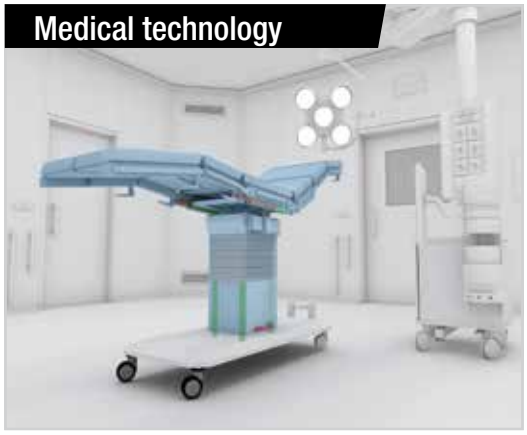



Warehouse logistics



Machine construction

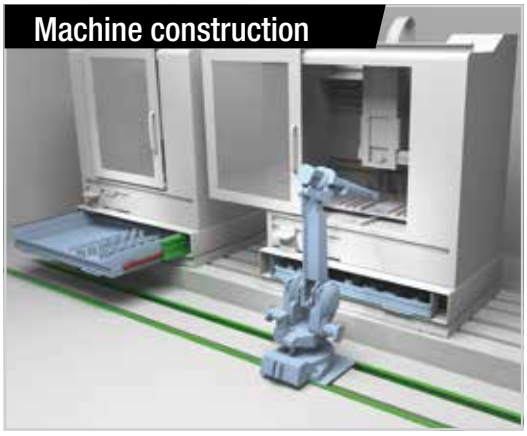

Motor vehicle technology

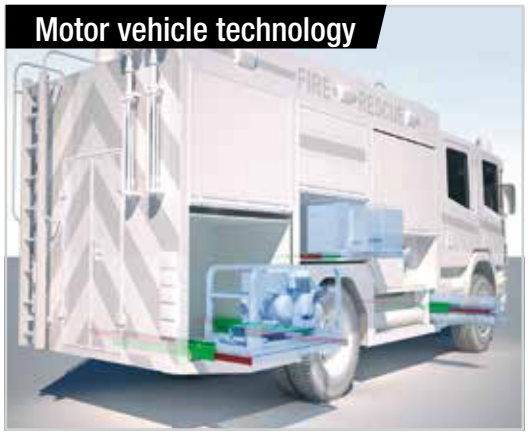



Ordering key

Hegra Rail

HGTX080	0500	0600	EG	VO	DG	B	Z	R	
								right or left version	
							alternate coating		
						stroke in both directions			
					damping				
				locking					
			snap						
		alternate stroke							
	closed length								
type with material and size									

Note on ordering: The size is always indicated as 3 digits, the length of the rail and the stroke are always 4 digits with the 0 prefixes.

Not all fileds must be filled out. If they are not used, they remain empty.

Ordering example: HGTX080-0500-0600-EG-V0-DG-B-Z-R

Type	
HTT	partial extension machined/drawn profile
HTC	partial extension c-profile
HVB	full extension outer c-profiles
HVD	full extension double c-profile
HVC	full extension single c-profile
HVT	full extension machined/drawn profile
H1D	over extension 150 % double c-profile
H1C	over extension 150 % single c-profile
H1T	over extension 150 % machined/drawn profile
H2H	over extension 200 % machined/drawn profile
LTH	heavy duty slide
HGT	heavy duty slide
LTF	s-profile
HGS	s-profile

Material	
	steel
A	aluminum
X*	stainless steel

* Different stainless steels, such as the “electropolishing” option, are available, please contact our technical service.

Accessory	
	no accessory
EO	snap on opened position
EG	snap on closed position
EB	snap on closed an opened position
VO	locking opened position
VG	locking closed position
VB	locking on closed an opened position
DG	damping closed position
B	stroke on closed an opened position
BM	stroke on closed an opened position with synchronization

Coating	
	thick-film passivation
Z	zinc nickel
N	nickel
E	anodizing colorless

Layout	
L	left version
R	right version

Special/Configuration	
S01	special (according to drawing)
C01	configuration (special stroke, stainless steel balls, special grease)

Notes

ROLLON®
LinearEvolution



- Rollon subsidiaries & agencies
- Sales partner

ROLLON S.p.A. - ITALY

Via Trieste 26
I-20871 Vimercate (MB)
Phone: (+39) 039 62 59 1
www.rollon.it - infocom@rollon.it

Subsidiaries:

ROLLON GmbH - GERMANY

Bonner Strasse 317-319
D-40589 Düsseldorf
Phone: (+49) 211 95 747 0
www.rollon.de - info@rollon.de

ROLLON B.V. - NETHERLANDS

Ringbaan Zuid 8
6905 DB Zevenaar
Phone: (+31) 316 581 999
www.rollon.nl - info@rollon.nl

ROLLON S.A.R.L. - FRANCE

Les Jardins d'Eole, 2 allée des Séquoias
F-69760 Limonest
Phone: (+33) (0) 4 74 71 93 30
www.rollon.fr - infocom@rollon.fr

ROLLON Corporation - USA

101 Bilby Road. Suite B
Hackettstown, NJ 07840
Phone: (+1) 973 300 5492
www.rolloncorp.com - info@rolloncorp.com

ROLLON Ltd - CHINA

No. 16 Jin Wen Road,
China, Shanghai, 201323
Phone: +86 21 5811 8288
www.rollon.cn.com - info@rollon.cn.com

ROLLON India Pvt. Ltd. - INDIA

1st floor, Regus Gem Business Centre, 26/1
Hosur Road, Bommanahalli, Bangalore 560068
Phone: (+91) 80 67027066
www.rollonindia.in - info@rollonindia.in

ROLLON - JAPAN

3F Shiodome Building, 1-2-20 Kaigan, Minato-ku,
Tokyo 105-0022 Japan
Phone: +81 3 6721 8487
info.japan@rollon.com - www.rollon.jp

Rep. Offices:

ROLLON S.p.A. - RUSSIA

117105, Moscow, Varshavskoye
shosse 17, building 1
Phone: +7 (495) 508-10-70
www.rollon.ru - info@rollon.ru

ROLLON Ltd. UK

The Works 6 West Street Olney
Buckinghamshire, United Kingdom, MK46 5 HR
Phone: +44 (0) 1234964024
www.rollon.uk.com - info@rollon.uk.com

Regional director:

ROLLON - SOUTH AMERICA

R. Joaquim Floriano, 397, 2o. andar
Itaim Bibi - 04534-011, São Paulo, BRASIL
Phone: +55 (11) 3198 3645
www.rollonbrasil.com.br - info@rollonbrasil.com

Please also be aware of our other product series



Contact:

The addresses of our worldwide sales partners are listed on our website: www.rollon.com

Changes and errors excepted. Texts and images may be used only with our permission.