ProxxonTools.com

PROXXON

MICROMOT Jigsaw
STS 12/E

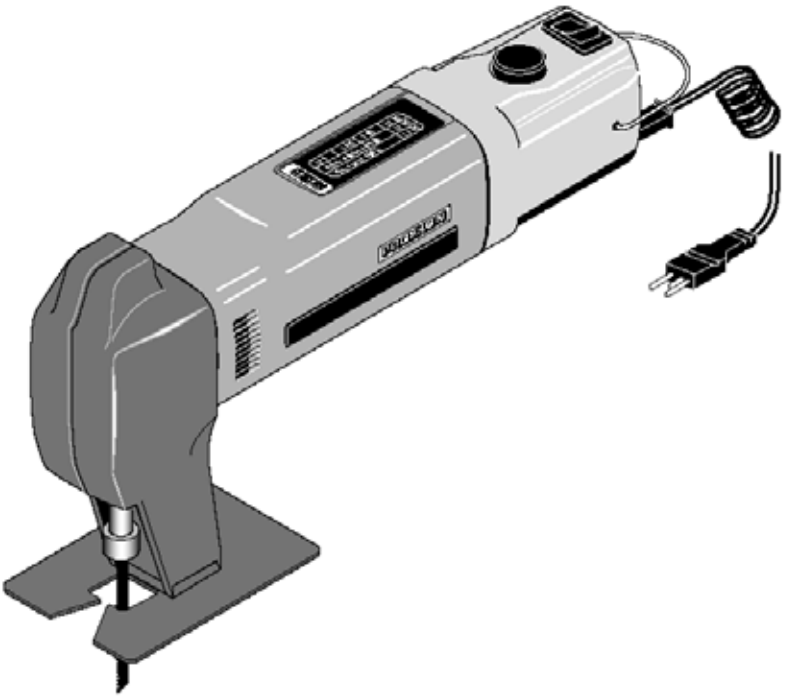

General:

This very lightweight and powerful machine is ideal for curved cuts in wood up to 3/8” (10 mm), circuit boards up to 7/64” (3 mm) and non-ferrous metals up to 3/32” (2,5 mm) thickness. Its weight makes it easy to handle and thus allows for precise control of the cutting action.

Legend (fig. 1):

1. speed control knob
2. plug for connection for power supply (AC adapter)
3. on/off switch
4. saw table
5. piston
6. saw blade

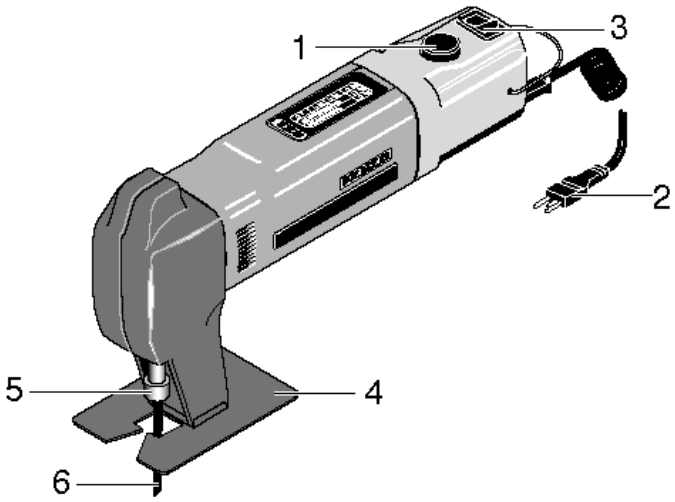

Fig. 1

Technical Data:

- Voltage: 2 – 18 Volt
- Direct current (DC) motor, 5 poles, current consumption max. 100 W.
- Electronic speed control for strokes from 2,000 – 5,000/min, stroke: 15/64” (6 mm)
- Noise development max.70 dB (A)
- Cutting depth: in wood up to 3/8” (10 mm), in circuit-boards up to 7/64” (3 mm), in non-ferrous metal up to 3/32” (2,5 mm).
- Housing made of fiberglass reinforced Nylon.
- 3 ¼” (100 cm) spiral cord.

Note:
The electronic speed-control is thyristor-regulated. Therefore it works only, when the unit is connected to non stabilized power supplies (e.g. all PROXXON MICROMOT power supplies). When connecting the unit to a battery, it will run full speed, only.

Power Supplies for Jigsaw STS 12/E:

For operating this unit we recommend PROXXON MICROMOT power supplies NG 2/S or NG 5/E or other power supply units with a minimum capacity of 2.0 A (24 VA).

Inserting and changing the saw blade (fig. 2):

Do not connect the saw to the power supply before inserting the blade and remove the plug from the adapter, when changing the saw blade during operation!

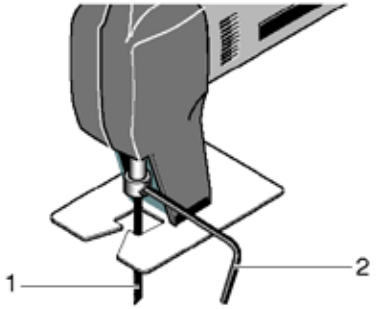

Fig. 2

Insert the saw blade **1** into the slot of the piston and tighten the clamping screw **2**, using the included Allen key.

Working with the unit (see fig. 3):

Connect the jigsaw to the chosen power source (see above) and switch it on via the rocker switch **2**:

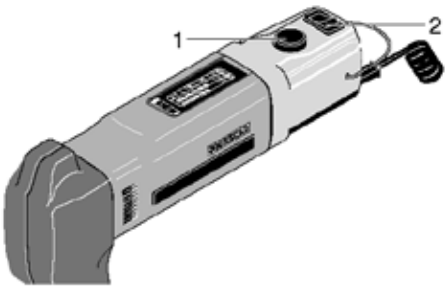

Fig. 3

A material oriented speed/stroke can be adjusted by turning the control knob **1**. Use higher speeds for wood, aluminum, brass and circuit boards, lower speeds for plastics, specially thin materials and very delicate work pieces.

Important: Only sharp and faultless saw blades will guarantee adequate cutting results. Please make sure to replace worn out saw blades in time and verify you have the appropriate saw blade, when working with different types of material.

Safety regulations:

- Do not lay down machine on your workbench while running.
- Do not leave running machine unattended.
- Let children only operate the unit, if under supervision of adults.
- Wear safety goggles.
- Make sure that the work piece is always securely fastened.
- Do not force the unit. Let the saw blade do the work!
- Store saw blades securely.
- Unplug the tool before carrying out any work on the unit.
- In any case ensure that the switch is set to the off position in order to prevent the unit from starting up again accidentally or unexpectedly.

Maintenance:

Lubricate the piston at regular intervals (after approx. 30 minutes of operation) with one drop of machine oil (see fig. 4).

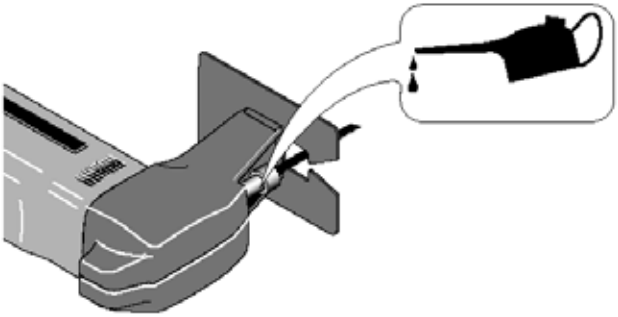

Fig. 4

Try to keep the unit as clean as possible. Other maintenance work is not necessary.