Montpellier

THE PERFECT BALANCE OF FUNCTION AND STYLE

LAUNDRY - DISHWASHING - COOKING - COOLING

Installation and Operating Instructions



Built Under Larder Fridge

MBUL101

Please read these instructions carefully before attempting to install or use this appliance.
We recommend that you keep these instructions in a safe place for future reference.

Welcome

Thank you for choosing this Montpellier appliance.

Our appliances have been designed to provide you with the best combination of style, reliability and performance to give you years of trouble-free use.

You may be familiar with a similar product, but please take time to read these instructions carefully before installing or using your appliance to ensure you get the most from your purchase.



We recommend that you keep this manual in a safe place for future reference.

Your appliance is covered by a comprehensive two year Parts & Labour Guarantee. In the unlikely event that you experience a problem with your appliance, you can rest assured that you are fully protected against the cost of repairs for the first 24 months . Please note that any claim must be accompanied by the model reference number, serial number and proof of purchase.

To activate your guarantee, you will need your product serial number. This can be found inside your appliance.

There are two ways to register your Guarantee:

- **Online:** Visit the Support page on our website and complete the online Product Registration form. **www.montpellier-appliances.com**
- **By Post:** Simply detach and fill in the form provided, attach a stamp and send it in the post. Don't forget to include your e-mail address so that we can send confirmation through to you.

Note: We are unable to take registrations over the phone.

Contents

3	Important information
5	Important safety and usage instructions
6	Before first use
7	General use of the fridge
8	Storage and use
9	Controls
10	Care and cleaning
11	Defrosting the fridge
12	Troubleshooting
14	Installation and ventilation
15	Mounting the fascia doors
17	Reversing the fridge door
19	Electrical information
21	Changing the light bulb
21	Climate range
22	Practical tips
23	Energy Efficiency information
24	Warranty and service

IMPORTANT: Please read the user instructions carefully before using the appliance for the first time and before installing it. Failure to install the appliance, or to have it installed, as per the user manual could invalidate the warranty. Any service calls relating to misuse or incorrect installation could incur a service charge.

Important Information

The Manufacturer cannot be held responsible for injuries or losses caused by incorrect use or installation of this product. Please note that the Manufacturer reserves the right to invalidate the guarantee supplied with this product following incorrect installation or misuse of the appliance or use in a commercial environment.

This appliance is not designed to be used by people (including children) with reduced physical, sensorial or mental capacity, or who lack experience or knowledge about it, unless they have had supervision or instructions on how to use the appliance by someone who is responsible for their safety.

Under no circumstances should any external covers be removed for servicing or maintenance except by suitably qualified personnel.

Appliance information:
Please enter the details on the appliance rating plate below for reference, to assist Customer Care in the event of a fault with your appliance and to register your appliance for guarantee purposes.

Appliance Model	MBUL101

Serial Number	

EU Declarations of Conformity

This appliance has been manufactured to the strictest standards and complies with all applicable legislation, including Electrical safety (LVD) 2014/35/EU and Electromagnetic interference (EMC) 2014/30/EU. Parts intended to come into contact with food conform to 1935/2004/EC.

IMPORTANT INFORMATION FOR CORRECT DISPOSAL OF THE PRODUCT IN ACCORDANCE WITH EU DIRECTIVE 2012/19/EU.

At the end of its working life, the product must not be disposed of as urban waste. The refrigeration system contains insulating gases and refrigerants, which require specialised waste disposal. The valuable materials contained in this appliance can be recycled. It must be taken to a special local authority differentiated waste collection centre or to a dealer providing this service.

Before disposing of an old appliance, remove the door seals, latch or bolt lock to avoid the risk of child entrapment.

Disposing of a household appliance separately avoids possible negative consequences for the environment and health. It also enables the constituent materials to be recovered, saving both energy and resources. As a reminder of the need to dispose of household appliances separately, the product is marked with a crossed-out wheeled dustbin 

Important Safety and Usage Instructions

Never store inflammable or explosive items and strong corrosive acids or alkalis in the appliance.

This is a household appliance, which is produced in accordance with the national standard. It is intended for food storage only, not for storage of blood, medicine and biological products.

To prevent risk of fire, keep the appliance away from petrol or any other inflammables.

To prevent risk of electromagnetic interference or other accidents, do not place a microwave oven on top of the refrigerator or use any electric appliance inside the refrigerator.

Do not allow children to play with or near the appliance.

The internal surfaces of the fridge compartment may be very cold when the appliance is running. Avoid touching, if possible, the surfaces especially when hands are wet.

Do not splash water onto the appliance. Keep it away from places of high humidity that may have adverse effect on the electric insulation performance.

This appliance is designed to be used in ambient temperatures between 18˚C and 38˚C. Use outside of this range may cause the appliance to fail.

Before first use

You must allow the fridge to settle for at least twenty four hours prior to switching the power on.

It is recommended that you clean the interior of the appliance prior to first use, using a solution of bicarbonate of soda and warm water and then thoroughly drying the interior.

The fridge may have an odour to it at first use. This will disappear as the appliance cools.

When first switching the appliance on it is advisable to set the fridge to setting 3 and leave the fridge to settle for 24 hours before adjusting the temperature to the preferred setting.

Please note:

The appliance will work continuously until it comes down to the correct temperature.

If the appliance is switched off, you should allow five minutes before switching it on again to prevent unnecessary damage to the compressor.

Never store inflammable or explosive items and strong corrosive acids or alkalis in the appliance.

This fridge cools your food by making the inside back of the cavity cold. It is normal for frost to build up on this surface; it then dissipates and drains through a small drain at the bottom, where it evaporates harmlessly. The presence of frosting at the back is not a malfunction of the fridge.

This refrigeration appliance is intended for use as a built-in appliance

General use of the fridge

Fridge

- Never put liquids in the refrigerator uncovered
- Never put hot foods in the refrigerator. Warm food should be allowed to cool to room temperature before being put into the refrigerator
- Nothing should rest against the rear wall of the refrigerator as this is a wet wall appliance which during normal usage will form droplets of ice on the rear wall(ref to image on Page13)and cause items to freeze to the back wall.
- Make sure food is clean and any extra water is wiped away before putting into the fridge
- Wrap or cover food before putting into the fridge. This will help prevent the loss of moisture, keep food fresh and avoid unpleasant odours
- Sort foods prior to storing. Any foods to be used soon should be stored at the front of the shelf to prevent deterioration caused by the door being open for prolonged periods
- Do not overfill the fridge. There should be sufficient space between the foods to allow the cool air to circulate
- Thawing frozen foods in the fridge compartment will help to keep the temperature low and save energy

Note: If the appliance does not have a freezer compartment (✳ ***) it is not suitable for freezing foodstuffs.

Storage and use

The fridge is for short term food storage. Although the temperature can be maintained between 0-10˚C, extended periods of food storage is not recommended.

As the cold air circulates within the fridge, the temperature can vary between the different sections. As such, foods should be stored in different sections according to type.

1. Butter and eggs
2. Food in jars and bottles
3. Drinks, e.g. milk
4. Cooked food
5. Yoghurts and cheese
6. Fresh meat and fish
7. Fruit and vegetables

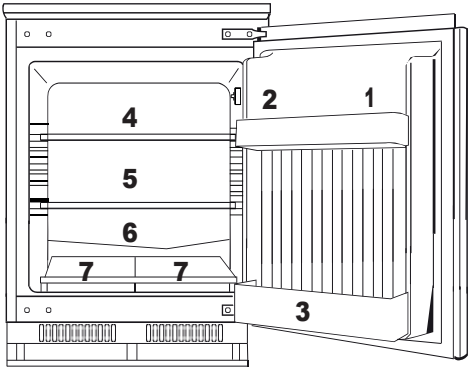

Fig.1

The fridge shelves can be moved according to the storage requirements within the fridge section. To move the shelf, lift up the front section and then pull it outwards. To replace, slide the shelf back into the slot, and lower the front section.

When storing root vegetables with leaves, such as carrots or turnips, their leaves should be removed. This prevents the leaves from absorbing nutrients from within the vegetables.

Controls

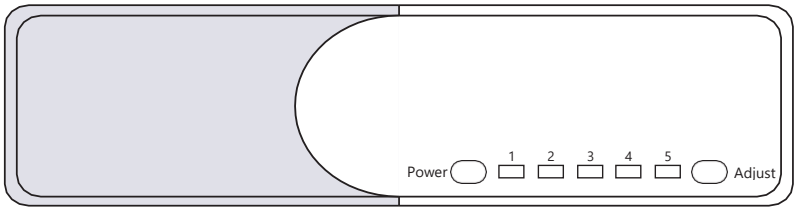

Fig. 2

Temperature control

The temperature controls for this fridge are simple and easy to use. To change the temperature simply press the adjust button on the right hand side of the unit to cycle through settings 1 to 5. The warmest setting being 1 and the coldest being 5.

After changing the temperature setting, the time taken to achieve the new temperature will depend on how big the change is from the previous setting.

Switching on and off

When the fridge is connected to a power supply the lights below the setting numbers will illuminate, indicating which setting is currently being used.

To switch the appliance on and off simply press and hold the power button on the left hand side of the unit for approximately 5 seconds

Care and cleaning

Always disconnect the appliance from the power supply before any cleaning or maintenance.

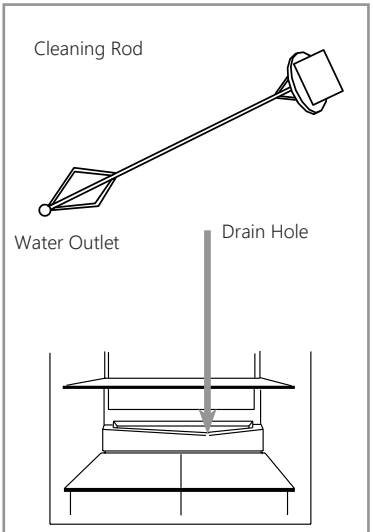

Fig. 3

The fridge and crisper sections should be cleaned using a solution of bicarbonate of soda and lukewarm water. Do not use abrasive products or detergents. After washing, rinse and dry thoroughly.

Clean the shelves, drawers and balconies separately by hand with a mild solution of washing up liquid and water. Do not put them in the dishwasher.

The water drain hole at the back of the fridge compartment and the evaporating tray should be cleaned periodically to prevent the defrosted water from collecting inside the fridge compartment. The cleaning rod can be used to clean the drain hole. Always ensure that the drainage channel, visible at the rear of the appliance, is kept clear of debris. If you notice that the drain hole/ channel is iced over, use warm (**not boiling**) water to remove the ice blockage.

If the appliance is not to be used for prolonged periods of time, unplug and clean the appliance. The doors should be left slightly ajar to prevent the formation of mildew and unpleasant odours.

Defrosting the fridge

The fridge is self-defrosting. Any water created will run out of the fridge through the channel at the back of the fridge.

It is important to keep the channel clear at all times using the cleaning tool supplied.

The defrosted water is collected in the evaporating tray at the back of the appliance and dissipated by evaporation.

If you notice a heavy build up of ice, refer to the troubleshooting section on ice on page 11.

Troubleshooting

If you have any problems with your appliance, you should check the troubleshooting guide prior to calling the Customer Care to prevent unnecessary service calls and potential cost. Contact details are on the back cover of this manual

If the appliance is not working, check the following:

- There is power to the appliance
- The house fuses are intact and the fuse in the plug has not blown
- The on/off switch is not set to off
- The plug socket is functioning correctly. To check this, plug another electrical appliance in to see if the socket is faulty

If the appliance is working, but not very well, check the following:

- The appliance is not overloaded
- The thermostat is set to an appropriate temperature
- The doors are closing properly
- The cooling system at the rear of the appliance is clean and free of dust, and not touching the rear wall
- There is enough ventilation at the side,rear walls and underneath
- The lower vents are neither blocked nor dirty

If the appliance is noisy, check the following:

- The appliance is level and stable
- The side and rear walls are clear, and there is nothing resting on the appliance
- **Note**: The cooling gas in the refrigerator may make a slight bubbling or gurgling noise, even when the compressor is not running

If there is water in the lower part of the refrigerator compartment:

- Check the drain hole in the channel at the back of the refrigerator is clear. If this is blocked refer back to Care and Cleaning (page10)
- Make sure no food or items are touching the back wall of the fridge as this may cause items to freeze to the back wall and during the automatic de-frost function water may run on to the shelves as well as in to the lower part of the fridge.

If ice has formed on the back wall of the fridge:

- It is normal for some ice droplets to form on the back wall of the fridge(see below image) as this is a wet wall fridge. This does not constitute a fault with the appliance
- Check that there is some resistance when opening the door of the appliance. If it opens at the slightest touch it may mean that the door seal needs to be replaced or the appliance is not correctly installed
- Check the door seal for any kinks, debris or damage. If you notice any, and are unable to resolve the issue yourself, contact the Customer Care so that the seal can be replaced

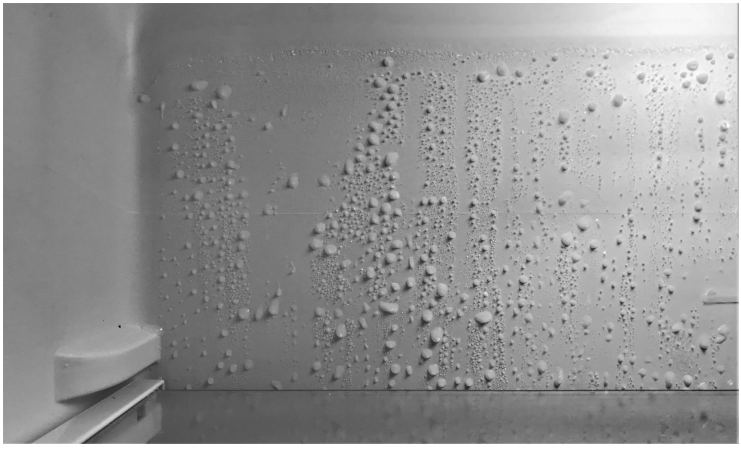

Installation and ventilation

This appliance must never be installed close to heat sources, e.g. heating elements, cookers or in damp places.

- To ensure the appliance is level, you should use the height adjustable feet at the front and rear of the appliance
- The ventilation system at the bottom of the appliance must not be blocked
- Fig. 4 shows the installation requirements for your appliance. All measurements are in millimetres. Failure to install the appliance correctly can lead to increased running costs, premature failure and may invalidate the warranty provided with the appliance

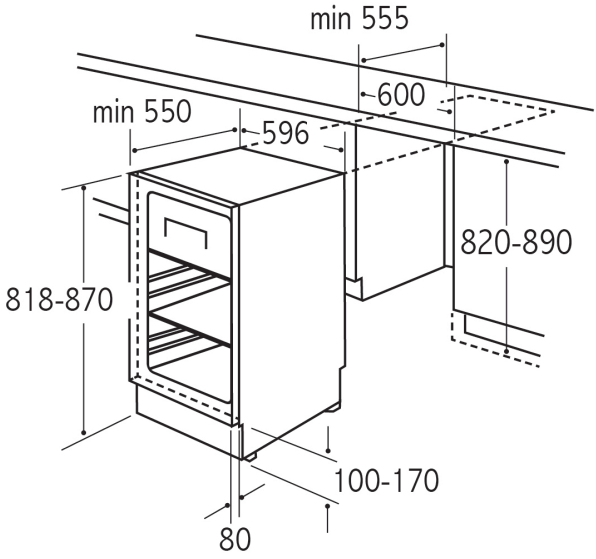

Fig. 4

Mounting the fascia doors

Fig. 6 - Fitting the decor door bracket

Remove the white decorative cover (Fig. 5) by lifting it upwards. Obtain the below measurements:

Dimension B = Measure from the underside surface of kitchen unit to the bottom of fixing bracket.

Dimension C = Measure from the underside surface of kitchen unit to the top of next unit door.

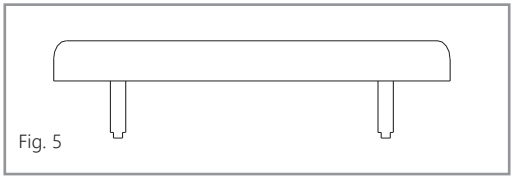
Fig. 5

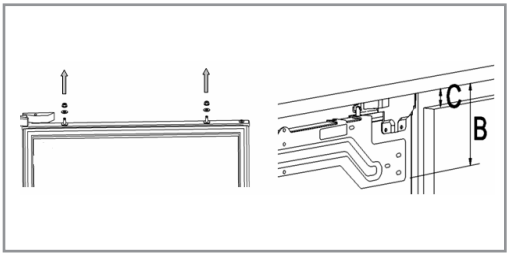

Unscrew and remove the nuts and washers from the top of the appliance door to remove the bracket.

Fig. 7 - Fitting the decor door bracket

Subtract C from B and put the fixing bracket (2) in place using this measurement for the vertical position and place to the centre for horizontal position. Secure the fixing bracket (2) using screws(1).

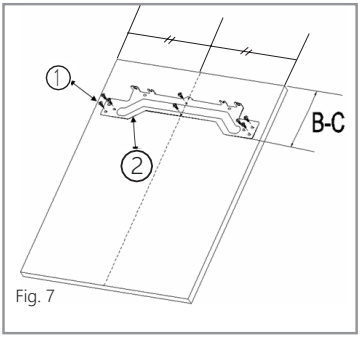

Fig. 7

Fig. 8 - Fitting the decor door

Place the decor door onto the appliance door by inserting adjustment bolts into the slots on the fixing bracket. Locate the washers and screw the nuts onto the adjustment bolts.

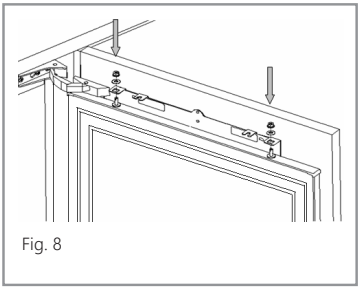
Fig. 8

Fig. 9 - Aligning the decor door

Close the door and check the alignment with the other unit doors. Adjust the decor door by screwing or unscrewing the adjustment bolts (3) for vertical adjustment and by the help of the slots on the fixing bracket for other directions. Lock the screws into place(4) once the door is correctly positioned.

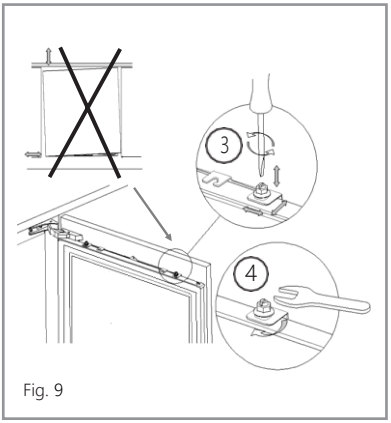

Fig. 9

Fitting the decor door base fixings

With the appliance door open, locate the metal decor door base fixing brackets and screw the fixings to the decor door. You may need to remove and re-fit these brackets depending upon the decor door used.

Fitting the decorative cover

Re-fit the decorative cover, that you removed in the first step, on to the decor door fixing bracket. Check that the whole door assembly operates smoothly and that the door seal of the refrigerator is still creating a seal.

Reversing the fridge door

We recommend you seek the help of another individual to support the doors whilst performing this operation.

1. Open the door
2. Carefully prise off the white cover caps for the side that you wish to switch the hinges to
3. Loosen the screws that hold the hinges to the fridge cabinet and remove the door
4. Remove the screws that secure the hinge to the door
5. Place the door somewhere safe where it will not cause or receive damage
6. Relocate the hinges to their opposing corners as shown in Fig. 10
7. Refit the door to the hinges. **Do not turn the door upside down**
8. Insert the cover caps (3) on the opposite side in the exposed holes
9. Ensure that the door seal is correct, as per page 17

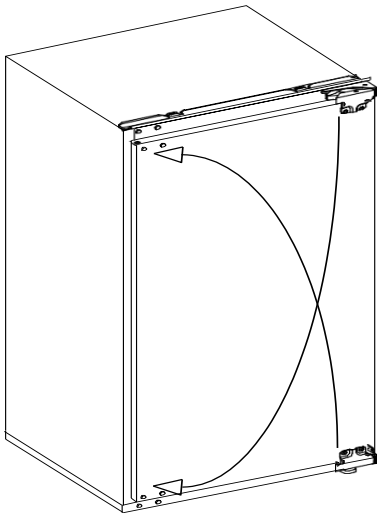

Fig. 10

Ensuring the door seals correctly:

It is normal for the seal to be compressed after the door has been reversed.

With the door closed, use a hair dryer to expand the seal and fill the gap between the door and the body of the appliance.

Take care not to use the hair dryer too close to the appliance, which could damage the seal. A distance of approximately 10cm should be adequate.

When completed, allow the seal and door to cool before touching them.

Once done, the seal will remain in position.

Electrical information

Warning! This appliance must be earthed.

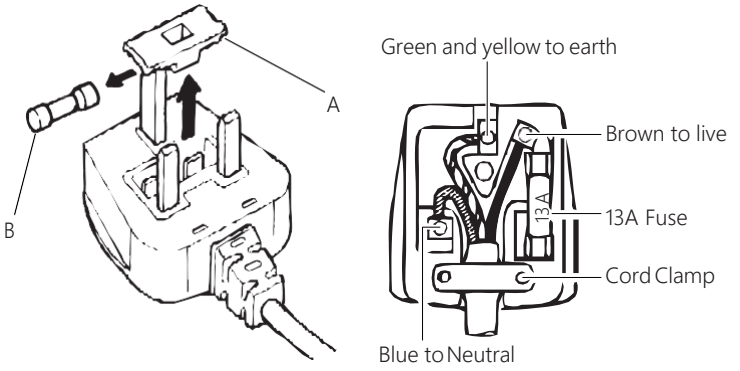

Fig. 11

The mains lead of this appliance has been fitted with a BS 1363A 13A fused plug. To change a fuse in this type of plug, follow the steps below:

1. Remove the fuse cover(A) and fuse(B)
2. Fit replacement 13A fuse, ASTA approved to BS 1362 type, into the fuse cover
3. Replace fuse cover

Important: Do not use the appliance without the fuse cover in position.

How to connect an alternative plug

If the fitted plug is not suitable for your socket outlet, then it should be cut off and disposed of safely to avoid possible shock hazard. A suitable alternative plug of at least 13 amp rating to BS 1363 should be used.

As the colours of the wires in the mains lead of this appliance may not correspond with the coloured markings identifying the terminals in your plug, proceed as follows:-

- The wire which is coloured GREEN and YELLOW must be connected to the terminal which is marked with letter (E) or by the Earth symbol ⏚ or coloured GREEN and YELLOW
- The wire which is coloured BLUE must be connected to the terminal which is marked with the letter (N) or coloured BLACK
- The wire which is coloured BROWN must be connected to the terminal which is marked with the letter (L) or coloured RED

If in doubt regarding the electrical connection of this appliance, consult a qualified electrician. Do not shorten the supply cable, the appliance may require removing for servicing.

N.B. Ensure that the plug socket is situated in an easily accessible place after installation.

E & O E. All instructions, dimensions and illustrations are provided for guidance only. The Manufacturer reserves the right to change specifications without prior notice.

Changing the light bulb

If the LED lighting fails in any way, it should only be replaced by an authorised service agents. In the event of light failure within your fridge please contact the Customer Care to arrange a service visit.

Climate range

The information about the climate range of the appliance is provided on the rating plate. It indicates at which ambient temperature (that is room temperature in which the appliance is working) is optimal for the operation of the appliance.

Climate class		Allowable ambient temperature
SN	Extended Temperate	This refrigeration appliance is intended for use at an ambient temperature ranging between 10°C and 32°C
N	Temperate	This refrigeration appliance is intended for use at an ambient temperature ranging between 16°C and 32°C
ST	Sub Tropical	This refrigeration appliance is intended for use at an ambient temperature ranging between 18°C and 38°C
T	Tropical	This refrigeration appliance is intended for use at an ambient temperature ranging between 18°C and 43°C

Practical tips

Due to the natural circulation of the air in the appliance, there are different temperature zones in the refrigerator chamber. The coldest area is directly above the vegetable drawers. Use this area for all delicate and highly perishable food such as:

- Fish, meat, poultry
- Sausage products, ready meals
- Dishes or baked goods containing eggs or cream
- Fresh dough, cake mixtures
- Pre-packed vegetables and other fresh food with a label stating it should be stored at a temperature of approximately 4°C

The warmest area is in the top section of the door. Use this area for storing butter and cheese.

To achieve the most effective food preservation for the longest possible time and to avoid wasting any food, position the products as shown in Fig. 1.(page 8) In addition this figure illustrates the layout of drawers, baskets and shelves, which allows the most efficient use of energy.

Optimal temperature and storage conditions will extend product shelf life and optimise electricity consumption. Optimal storage temperature range should be stated on the food packaging.

Montpellier

Energy Efficiency Information			
Attribute	**Symbol**	**Value**	**Units**
Model identification: MBUL101			
Category of the household refrigerating appliance		1	
Voltage / Frequency	220 - 240V ~ / 50Hz		
Dimensions (W x D x H cm)	59.6 x 55 x 81.8-87		
Mass of the appliance	M	28	kg
Energy efficiency class		F	
Annual energy consumption	AEc	116.07	kWh/year
The energy consumption is based on standard test results for 24 hours. Actual energy consumption will depend on how the appliance is used and where it is located.			
Storage volume (fridge)		135	L
Storage volume (freezer)		0	L
Star rating			
Defrosting type	Automatic		
Climate class		ST	
Airborne accoustic noise emissions	pW	40	dB(A)

Here For You

After-sales assistance

If you continue to experience problems with your appliance, please call the Montpellier customer service helpline on: **01759 487839**

Please have all your product details available, including the model number, serial number, date of purchase, and your retailer's details before registering a fault.

The service call cannot progress without this information.

Your 2 year Manufacturer's guarantee

THIS DOES NOT AFFECT YOUR STATUTORY RIGHTS.

Your new Montpellier appliance carries a free guarantee which protects you against the cost of repairs during the first 24 months from date of purchase provided that:

Any claim is accompanied by evidence of the model reference, model serial number and proof of purchase, such as a Sales Receipt, showing that the appliance was purchased within the 24 months prior to the date of claim.

What is not covered under the Guarantee

- Any appliance not correctly installed and operated in accordance with the manufacturer's instructions
- Any appliance that is used for anything other than domestic purposes.
  Any defect caused by accident, misuse, unauthorised modification or inexpert repair.
- Cost of Call-out where a fault cannot be found with the appliance.
  Cost of Call-out for work covering routine maintenance, such as, but not exclusively, cleaning of filters or defrosting.
- Cost of Call-out for work required to correct the alignment of doors following door reversal procedures carried out by you.
  Use of the appliance by anyone other than the Householder.
  Use in any commercial environment.
- Consumable items, such as, but not exclusively, fuses in plugs, bulbs and breakable items which require routine replacement.
  Repair costs incurred that have not been authorised by Montpellier service and/or carried out by a non-approved Montpellier engineer.
- Montpellier Appliances do not accept claims for consequential loss, rusting, corroding, delivery damage or scratches.

YOUR GUARANTEE IS VALID ONLY IN THE UK.

To register your appliance simply complete the card in your appliance pack and return it with a stamp affixed or alternatively you can register online at **www,montpellier-appliances.com/support**

SERVICE HELP-LINE

Should your appliance develop a fault, please call the Montpellier customer service helpline on:

01759 487839

Please remember to have all your product details available, including the model number, serial number, date of purchase and your retailer's details before registering a fault.

Montpellier Domestic Appliances Ltd.
Unit 1, Tewkesbury Retail Park, Northway Lane,
Tewkesbury, Gloucestershire GL20 8JU

www.montpellier-appliances.com



The symbol on the product or on its packaging indicates that this product may not be treated as household waste. Instead it shall be handed over to the applicable collection point for the recycling of electrical and electronic equipment. By ensuring this product is disposed of correctly, you will help prevent potential negative consequences for the environment and human health, which could otherwise be caused by inappropriate waste handling of this product. For more detailed information about recycling of this product, please contact your local city office, your household waste disposal service or the shop where you purchased the product.