MAXIMATOR®
Maximum Pressure.

High Pressure Technology • Testing Equipment
Hydraulics • Pneumatics

Techincal data sheet | **Emergency stop**



sample picture

Technical data:	
Emergency stop system consisting of an emergency stop control and 3/2 way-valve (exclusive).	
Pressure range:	0-10 bar
Temperatur range:	-10°C...+55°C (environs)
Pneu. connections:	1,2,3 und 7 BSP1/8" (F) 5 und 9 M5 (F)
Housing:	AL anodized &CrNi - steel
Locking feature:	PLr c
Manual stop function:	PLr b
Weight:	2,25 kg
ATEX 94/9/EG:	see product overview
Accessories (valve):	see product overview

Product Overview Emergency stop

Description	ATEX	Order code
Emergency stop control pneu. ATEX	II 2G D c T6 T 70°C	3301.4085

Product Overview 3/2 way-valve (required accessories)

Description	ATEX	Order code
Emergency stop valve 3/2-way BSP 1/4"	II 2 GD c T5 T100°C	3301.0192
Emergency stop valve 3/2-way BSP 1/2"	II 2 GD c T5 T100°C	3301.0170
Emergency stop valve 3/2-way BSP 3/4"	II 2 GD c T5 T100°C	3301.0171

Product Overview accessories

Description	Order code
Emergency stop mounting bracket	3301.1491

Release 03 / 2015 • MAXIMATOR Units • Data sheet Emergency stop • B.01.07.14_EN

For further questions or information please do not hesitate to contact us. We reserve the right for changes in design and type of products as long as it is in accordance to the defined requirements and technical specifications. For each project and service we apply our general business conditions including product liability.

MAXIMATOR®
Maximum Pressure.

High Pressure Technology • Testing Equipment
Hydraulics • Pneumatics

Techincal data sheet **Emergency stop**

Dimensions

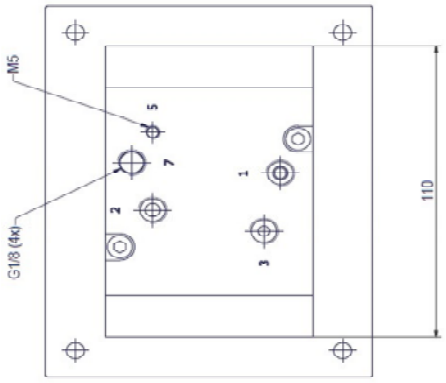

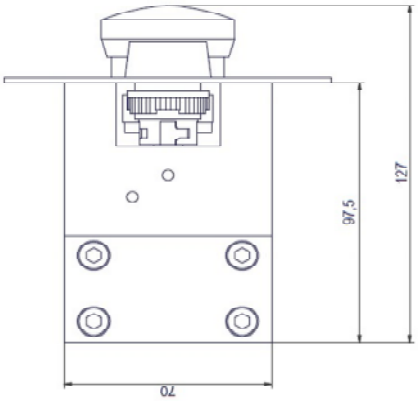

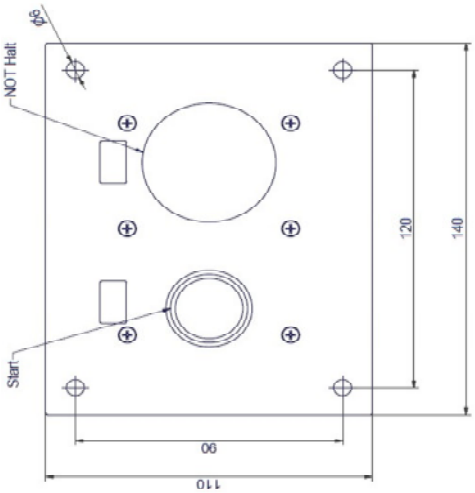

connection designations

1	Pressure connection
2	Pressure outlet
3, 5 und 7	Vent port

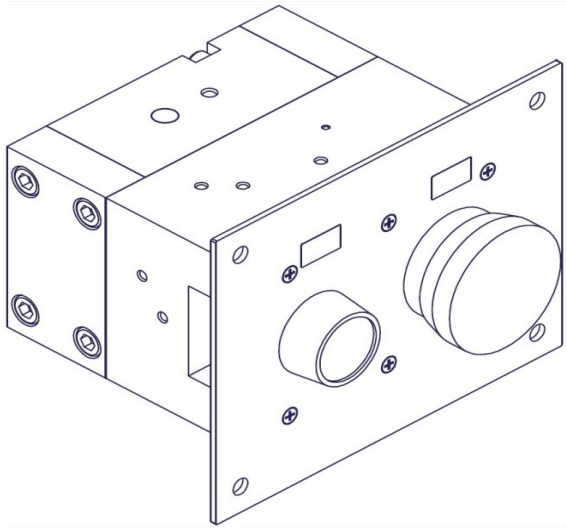

Release 03 / 2015 • MAXIMATOR Units • Data sheet Emergency stop • B.01.07.14_EN

For further questions or information please do not hesitate to contact us. We reserve the right for changes in design and type of products as long as it is in accordance to the defined requirements and technical specifications. For each project and service we apply our general business conditions including product liability.