©2012 Lennox Industries Inc.
Dallas, Texas, USA

INSTALLATION INSTRUCTIONS

ELO183DH Series Units

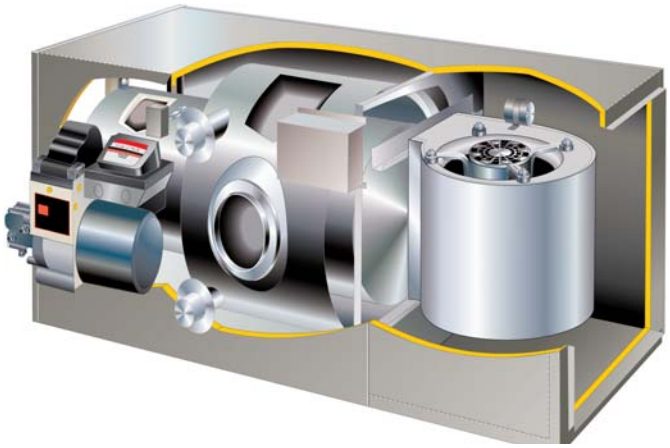

OIL UNITS
506903-01
12/2012
Supersedes 04/2012

Technical Publications
Litho U.S.A.

RETAIN THESE INSTRUCTIONS FOR FUTURE REFERENCE

⚠ IMPORTANT

This unit must be serviced annually by a licensed professional technician, or equivalent.

⚠ WARNING

Improper installation, adjustment, alteration, service, or maintenance can cause injury or property damage. Refer to this manual. For assistance or additional information, consult a licensed professional installer, or equivalent, or service agency.

⚠ WARNING

Do not store or use gasoline or other flammable vapors and liquids in the vicinity of this or any other appliance.

⚠ CAUTION

When venting this appliance, keep vent terminal free of snow, ice and debris.

⚠CAUTION

As with any mechanical equipment, personal injury can result from contact with sharp sheet metal edges. Be careful when you handle this equipment.

Table of Contents

Elite Series Oil Furnace 1
Shipping and Packing List 1
Unit Dimensions 2
ELO183DH Unit Parts Arrangement 3
Oil Burner Parts Arrangement 3
Requirements 4
Combustion & Ventilation Air 5
Installation 7
Adjustments 8
Venting 9
Flue Connections 10
Supply & Return Air Plenums 11
Optional Filter Kit 11
Oil Supply Line Sizing 11
Oil Supply Line & Filter Connections 13
Leak Check 13
Electrical Wiring 13
Unit Start-Up & Adjustments 15
Service 16
Burner Control 17
Troubleshooting 19
Start-Up & Performance Checklist 24

Elite® Series Oil Furnace

These instructions are intended as a general guide and do not supersede local codes in any way. Only licensed professional technicians, or equivalent, can install and service the Lennox Elite® Series ELO183DH oil furnaces. In Canada, refer to CSA B139 for recommended installation procedures. Consult authorities who have jurisdiction before installation.

⚠ WARNING

Never push the ignition reset button more than one time. Pushing the reset more than once can lead to a build-up of oil within the heat exchanger resulting in a fire or explosion.

Shipping & Packing List

1- Assembled oil furnace
1- Draft control
2- Nozzels

Check the components for shipping damage. If you find any damage, immediately contact the last carrier.

ELO183DH Unit Dimensions - Inches (mm)

Model No.		A	B	C	D	E	F	G	H
ELO183DH 101/114P36	in.	20-1/2	20-1/2	18	18	18	18	3	10-1/4
	mm	521	521	457	457	457	457	76	260
ELO183DH 135/150P60	in.	23-1/2	23-1/2	21	21	21	21	4-3/4	11-3/8
	mm	597	597	533	533	533	533	121	289

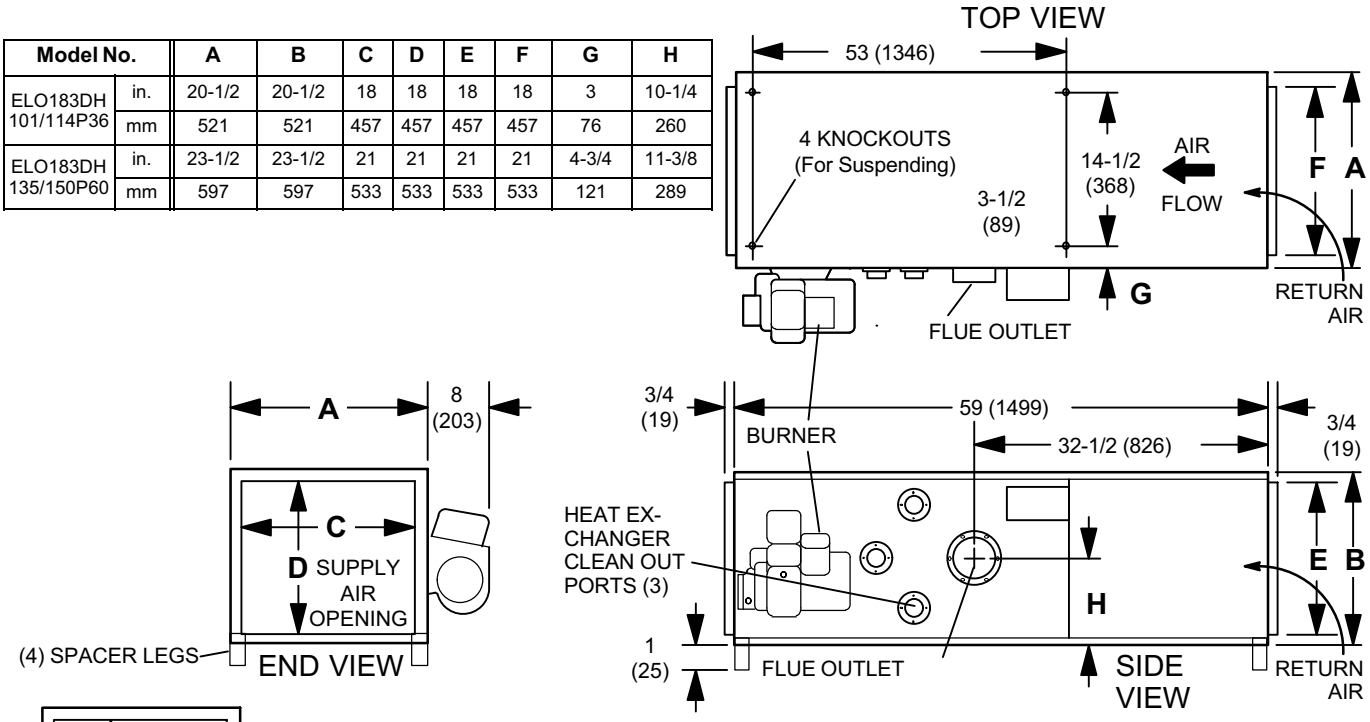

HORIZONTAL POSITION

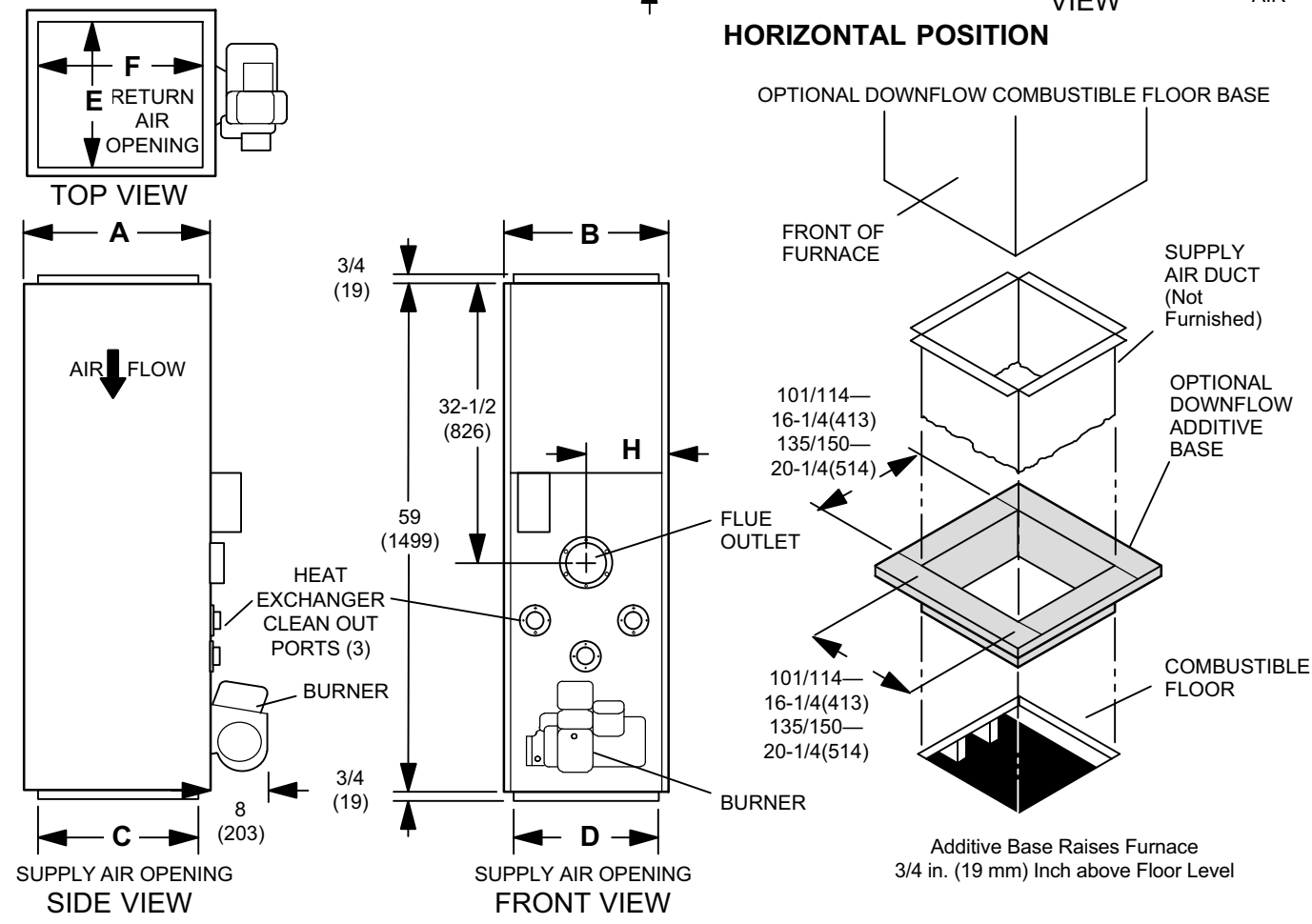

DOWNFLOW POSITION

ELO183DH Unit Parts Arrangement

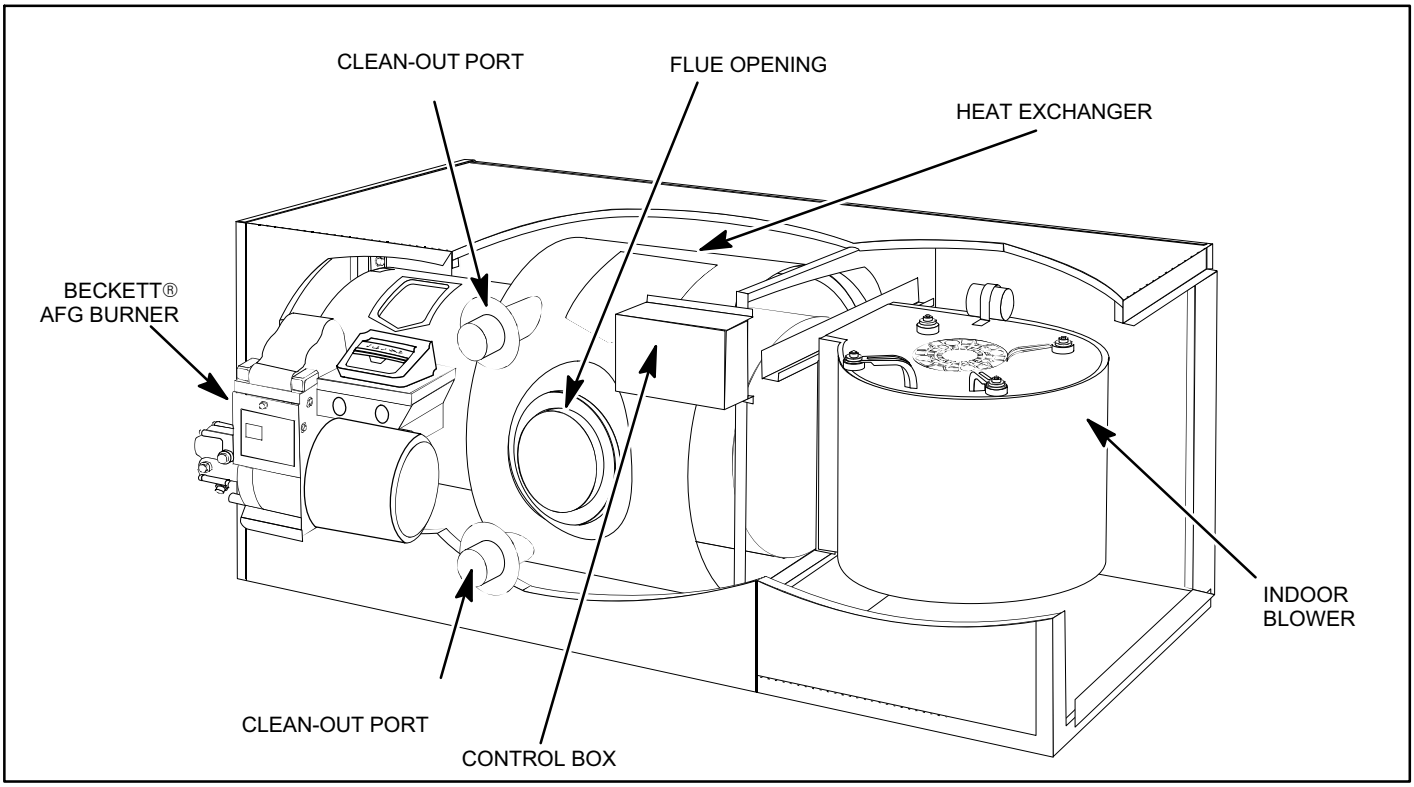

Figure 1

ELO183DH Oil Burner Parts Arrangement

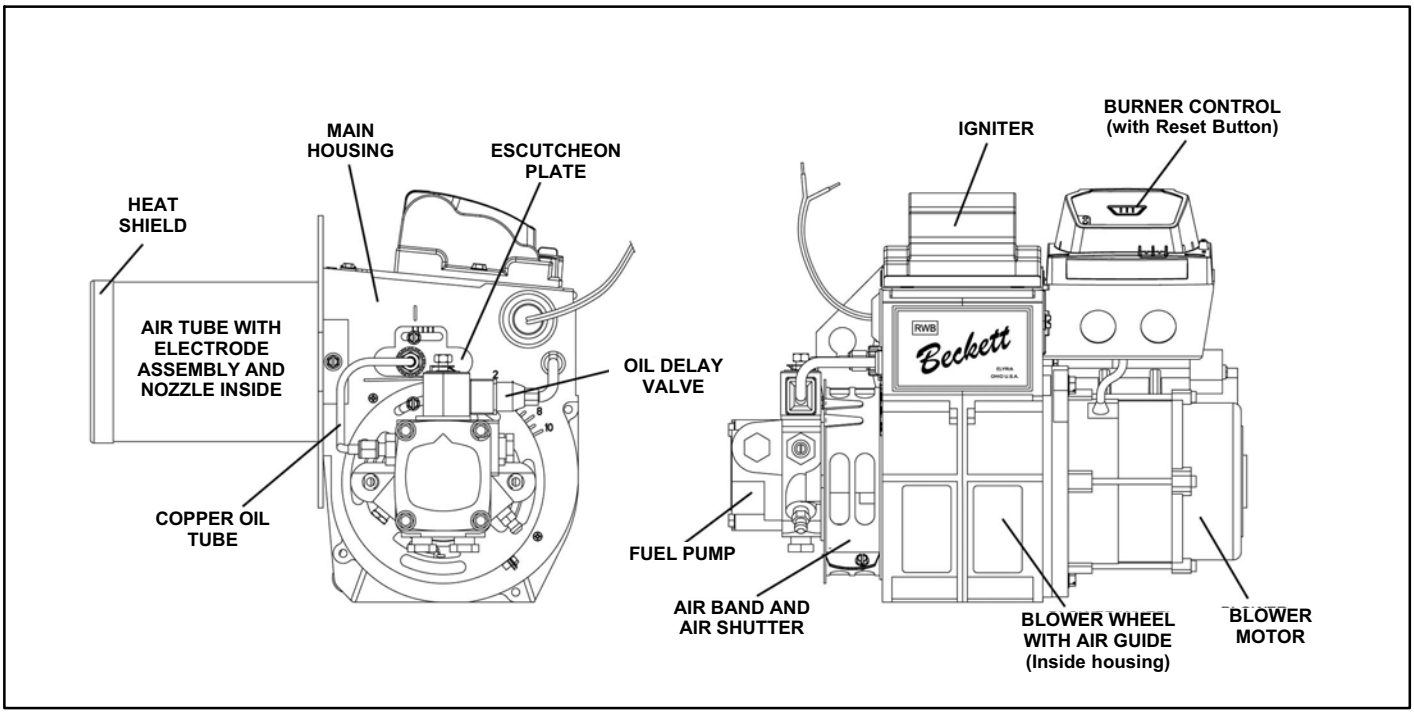

Figure 2

Requirements

⚠ WARNING

Product contains fiberglass wool.

Disturbing the insulation in this product during installation, maintenance, or repair will expose you to fiberglass wool dust. Breathing this may cause lung cancer. (Fiberglass wool is known to the State of California to cause cancer.)

Fiberglass wool may also cause respiratory, skin, and eye irritation.

To reduce exposure to this substance or for further information, consult material safety data sheets available from address shown below, or contact your supervisor.

Lennox Industries Inc.

P.O. Box 799900
Dallas, TX 75379-9900

⚠ WARNING

Improper installation, adjustment, alteration, service or maintenance can cause property damage, personal injury or loss of life. Installation and service must be performed by a qualified installer or service agency.

Installation of Lennox oil-fired furnaces must conform with the National Fire Protection Association Standard for the Installation of Oil Burning Equipment, NFPA No. 31, the National Electrical Code, ANSI/NFPA No.70 (in the U.S.A.), CSA Standard CAN/CSA-B139 (in Canada), Installation Code for Oil Burning Equipment, the Canadian Electrical Code Part1, CSA 22.1 (Canada), the recommendations of the National Environmental Systems Contractors Association and any state or provincial laws or local ordinances. Authorities having jurisdiction should be consulted before installation. Such applicable regulations or requirements take precedence over general instructions in this manual.

Chimneys and chimney connectors must be of the type and construction outlined in section 160 of NFPA No. 31.

Air for combustion and ventilation must conform to standards outlined in section 140 of NFPA No. 31 or, in Canada, CSA Standard B139. When installing ELO183DH units in confined spaces such as utility rooms, two combustion air openings are required. Dimensions of combustion air openings are shown in table 1. One opening shall be below burner level and the other opening shall be no more than 6 inches from the room's ceiling.

Combustion air openings should provide a minimum free area one-half square inch per 1,000 Btu per hour input. This combustion air should be brought into the area containing the furnace below the level of the furnace burner.

⚠ IMPORTANT

An opening to the outside for combustion air is strongly recommended, especially in new homes. Refer to table 1 or the unit rating plate for specific combustion air opening dimensions.

Table 1

Combustion Air Opening Dimensions	
Model No.	**(2 openings required)**
ELO183DH -101/114	10” X 20”
ELO183DH -135/150	11” X 22”

This unit is approved for clearances to combustible material as listed unit rating plate and in tables 2 or 3. Unit service and accessibility clearances take precedence over fire protection clearances.

Table 2

Horizontal Installation Clearances	
Clearances	**Inches (mm)**
Top of Cabinet	3 (76)
*Bottom and Rear of Cabinet	1 (25)
Front of Cabinet	24 (610)
Service Clearance (Front)	24 (610)
End of Supply Plenum	0 (0)
Supply Air Opening	0 (0)
Return Air Opening	0 (0)
Above Horizontal Warm Air Duct within 3 ft. (914mm) of Furnace	0 (0)
Flue Pipe Horizontal	7 (178)
Flue Pipe Vertical	7 (178)
**NOTE-When furnace is installed on combustible floor, 1” (25 mm) spacer legs must be installed to elevate unit off of mounting surface.*	

Table 3

Downflow Installation Clearances	
Clearances	**Inches (mm)**
Bottom of Plenum and Ductwork	1 (25)
Plenum Sides	1 (25)
Side of Cabinet	1 (25)
Rear of Cabinet	1 (25)
Front of Cabinet	16 (406)
Service Clearance (Front)	24 (610)
Flue Pipe Horizontal	1 (25)
Flue Pipe Vertical	7 (178)
Return Air Opening	0 (0)
*Floor	*Combustible
**NOTE-Clearance for installation on combustible floor if optional additive base is installed between the furnace and combustible floor. Not required in add-on coiling applications.*	

NOTE - Downflow Application Only - For installation on combustible floors, appliance shall not be installed directly on carpeting, tile or other combustible material other than wood flooring. When installed on wood flooring, the additive base must be used. See Unit Dimension illustration.

NOTE - Unit must be adjusted to obtain a temperature rise within the range listed in table 8.

When used in conjunction with a evaporator coil, the furnace shall be installed in parallel with, or on the upstream side of the evaporator coil. In a parallel flow arrangement, the dampers, or other measures used to control flow of air flow, shall be adequate to prevent chilled air from entering the furnace. If the furnace is manually operated, it must be equipped with means to prevent operation of either unit unless dampers are in the full-heat or full-cool position.

When installed, furnace must be electrically grounded in accordance with local codes or, in the absence of local codes, with the current National Electric Code, ANSI/ NFPA No. 70, if an external electrical source is utilized.

Field wiring connection with unit must meet or exceed specifications of type T wire and withstand a 63°F (17°C) temperature rise.

Notice to Home Owner

This furnace is equipped with safety devices that protect you and your property. If one or more of these devices is activated, furnace operation will stop. If your home is left unattended for an extended period of time, equipment operation must be checked periodically. If this is not possible, the water supply to the house should be shut off and the pipes should be drained. This will prevent problems associated with a NO HEAT condition (frozen pipes, etc.)

Combustion & Ventilation Air

Homes built with energy conservation in mind use tight construction practices. These houses are sealed so well that it becomes necessary to provide a means of bringing in air from outside for combustion. Also, exhaust fans, appliance vents, chimneys and fireplaces force additional air that could be used for combustion out of the house. Unless outside air is brought into the home for combustion, negative pressure (pressure outside is greater than inside pressure) will build to the point that a down draft can occur in the furnace vent pipe or chimney. Combustion gases enter the living space creating a potentially dangerous situation. Negative pressure may also interfere with proper combustion, causing sooting within the heat exchanger.

The importance of the previous paragraph cannot be overstated. Users may inadvertently block fresh air intakes after installation.

In the absence of local codes concerning air for combustion and ventilation, the following section outlines guidelines and recommends procedures for operating oil furnaces in a manner that ensures efficient and safe operation. Special consideration must be given to combustion air needs as well as requirements for exhaust vents and oil piping.

Combustion Air Requirements

⚠ CAUTION

Insufficient combustion air can cause headaches, nausea, dizziness or asphyxiation. It will also cause excess water in the heat exchanger resulting in rusting and premature heat exchanger failure. It can also cause property damage.

All oil-fired appliances require air to be used for the combustion process. If sufficient amounts of combustion air are not available, the furnace or other appliance will operate in an inefficient and unsafe manner. Enough air must be provided to meet the needs of all fuel-burning appliances, as well as appliances such as exhaust fans which force air out of the home. When fireplaces, exhaust fans, or clothes dryers are used at the same time as the furnace, much more air is required to ensure proper combustion and to prevent a down-draft situation. Insufficient amounts of air also cause incomplete combustion which can result in sooting. Requirements for providing air for combustion and ventilation depend largely on whether the furnace is installed in an unconfined or confined space.

Unconfined Space

An unconfined space is an area such as a basement or large equipment room with a volume greater than 50 cubic feet (1.4 cubic meters) per 1,000 Btu (293 W) per hour of the combined input rating of all appliances installed in that space. This space also includes adjacent rooms which are not separated by a door. Though an area may appear to be unconfined, it might be necessary to bring in outdoor air for combustion if the structure does not provide enough air by

infiltration. If the furnace is located in a building of tight construction with weather stripping and caulking around the windows and doors, follow the procedures outlined for using air from the outside for combustion and ventilation.

Confined Space

A confined space is an area with volume less than 50 cubic feet (1.4 cubic meters) per 1,000 Btu (293 W) per hour of the combined input rating of all appliances installed in that space. This definition includes furnace closets or small equipment rooms.

When the furnace is installed so that supply ducts carry air circulated by the furnace to areas outside the space containing the furnace, the return air must be handled by ducts which are sealed to the furnace casing and which terminate outside the space containing the furnace. This is especially important when the furnace is mounted on a platform in a confined space such as a closet or small equipment room. Even a small leak around the base of the unit at the platform or at the return air duct connection can cause a potentially dangerous negative pressure condition. Air for combustion and ventilation can be brought into the confined space either from inside the building or from outside.

Air from an Adjacent Space

If the confined space housing the furnace adjoins space categorized as unconfined, air can be brought in by providing two permanent openings between the two spaces. Each opening must have a minimum free area of 1 square inch (6.4 square centimeters) per 1,000 Btu (293 W) per hour of the total input rating of all fuel-fired equipment in the confined space. Each opening must be at least 100 square inches (614.5 square centimeters). One opening shall be within 12” (305 mm) of the top of the enclosure and one opening within 12” (305 mm) of the bottom (See figure 1).

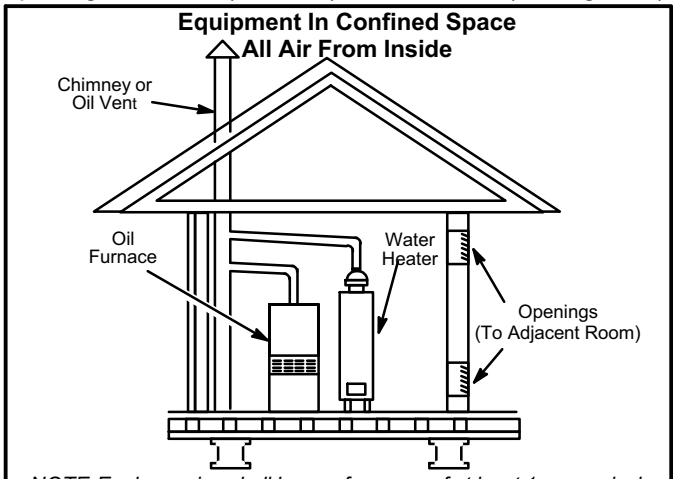

NOTE-Each opening shall have a free area of at least 1 square inch (6.4 square centimeters) per 1,000 Btu (293 W) per hour of the total input rating of all equipment in the enclosure, but not less than 100 square inches (614.5 square centimeters).

Figure 1

Air from Outside

If air from outside is brought in for combustion and ventilation, the confined space shall be provided with two permanent openings. One opening shall be within 12” (305 mm) of the top of the enclosure and one within 12” (305 mm) of the bottom. These openings must communicate directly or by ducts with the outdoors or spaces (crawl or attic) that freely communicate with the outdoors or indirectly through vertical ducts. Each opening shall have a minimum free area of 1 square inch (6.4 square centimeters) per 4,000 Btu (1172 W) per hour of total input rating of all equipment in the enclosure. (See figure 2.) When communicating with the outdoors through horizontal ducts, each opening shall have a minimum free area of 1 square inch (6.4 square centimeters) per 2,000 Btu (586 W) per total input rating of all equipment in the enclosure (See figure 3).

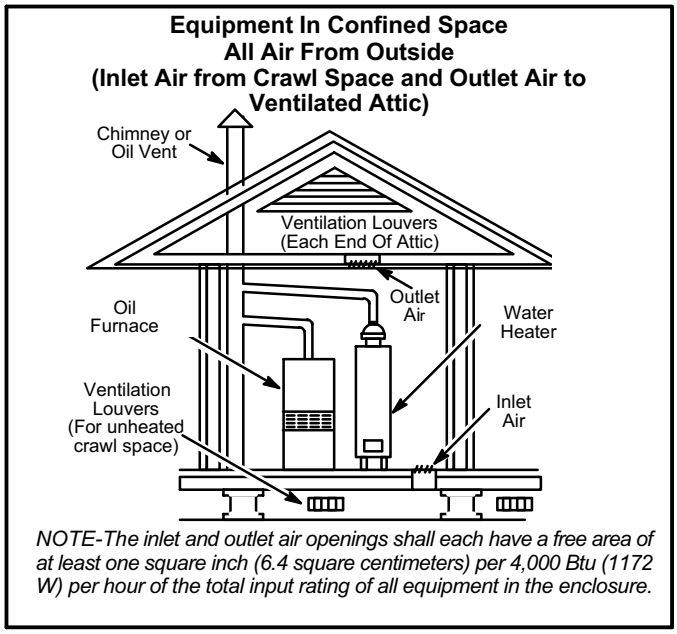

NOTE-The inlet and outlet air openings shall each have a free area of at least one square inch (6.4 square centimeters) per 4,000 Btu (1172 W) per hour of the total input rating of all equipment in the enclosure.

Figure 2

When ducts are used, they shall be of the same cross-sectional area as the free area of the openings to which they connect. The minimum dimension of rectangular air ducts shall be no less than 3” (76 mm). In calculating free area, the blocking effect of louvers, grilles, or screens must be considered. If the design and free area of protective covering is not known for calculating the size opening required, it may be assumed that wood louvers will have 20 to 25 percent free area and metal louvers and grilles will have 60 to 75 percent free area. Louvers and grilles must be fixed in the open position or interlocked with the equipment so that they are opened automatically during equipment operation.

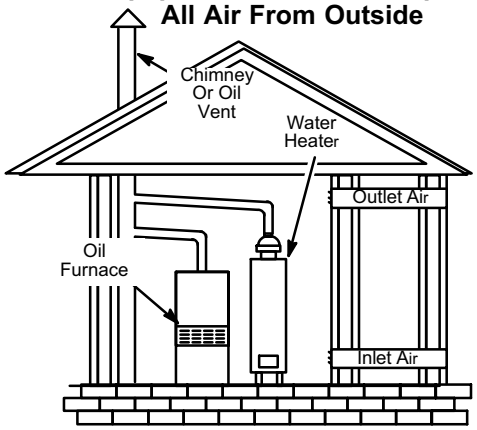

NOTE-Each air duct opening shall have a free area of at least one square inch (6.4 square centimeters) per 2,000 Btu (586 W) per hour of the total input rating of all equipment in the enclosure. If the equipment room is located against an outside wall and the air openings communicate directly with the outdoors, each opening shall have a free area of at least one square inch (6.4 square centimeters) per 4,000 Btu (1172 W) per hour of the total input rating of all other equipment in the enclosure.

Figure 3

⚠ CAUTION

Combustion air openings in the front of the furnace must be kept free of obstructions. Any obstruction will cause improper burner operation and may result in a fire hazard or injury.

⚠ CAUTION

The barometric draft control shall be in the same atmospheric pressure zone as the combustion air inlet to the furnace. Deviation from this practice will cause improper burner operation and may result in a fire hazard or injury.

Installation

When installed, ELO183DH furnaces must be level. If the furnace is not level, place fireproof wedges or shims between the low side of the furnace and floor. Make sure the weight of the furnace is evenly distributed on all four corners. Strain on sides of the cabinet causing cracking and popping noises may occur if weight of furnace is not evenly distributed.

Set the unit in desired location keeping in mind the clearances list in tables 2 and 3. Also keep in mind oil supply connections, electrical supply, flue connections and sufficient clearance for installing and servicing unit.

ELO183DH series units may be installed in a crawl space under a house, utility room or in a wide variety of suspended applications.

Horizontal Application

The ELO183DH furnace is shipped from the factory in the horizontal left hand air discharge application. Air flow may be reversed to right side discharge or unit may be used as downflow.

1. Reversing Airflow for Right Hand Discharge
   - Rotate the furnace 180° so that, when facing the front, the warm discharge is to the right.
   - Remove the nuts in the bracket that hold the burner to the furnace front. Rotate the burner and burner mounting plate 180° and reinstall the nuts.
   - Remove the screws that hold the limit control in place. Use the provided knockout hole to relocate the limit control to the top side of the front panel.
2. Installation on Non-Combustible Material
   - Set the furnace on non-combustible material (such as concrete blocks, bricks or angle iron). Install spacer legs, provided with unit, by using the cabinet screws from each corner of the unit.
   - Use a level to check the level of furnace in at least two directions. Use shims or non-combustible material. A minimum clearance of 1" must be maintained between bottom of furnace and combustible material.
3. Suspended Installation
   - To suspend the furnace, remove knockouts in top of panel at warm air discharge and at blower panel (Refer to unit dimensions). Use 3/8" rods cut to desired length.
   - Use one flat washer and two nuts for each rod (a nut and washer on the inside of unit and the other "locking" nut on the outside of unit; see figure 4). Level the unit by adjusting the nuts on the inside of unit.

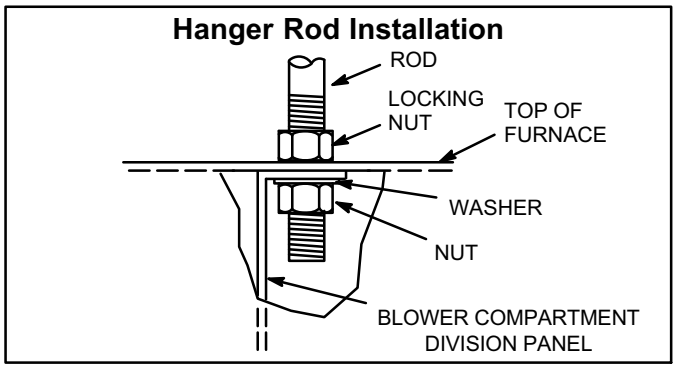

Figure 4

Downflow Application

When installing the ELO183DH in a downflow position and on combustible flooring, a combustible floor base must be used. See Unit Dimension illustration.

1. Rotate the furnace so that return is on top and supply is on bottom. Refer to table 3 for clearances to combustible flooring.
2. Remove the nuts in the bracket that hold the burner to the furnace front. Rotate the burner and burner mounting plate 90° and reinstall the nuts.

3. It is also recommended that the upper rear screw holding the blower housing to the blower deck be removed before installation in a closet. Removing this screw allows for easy service and removal of the blower assembly in a closet installation.

Adjustments

Neither the nozzle setting nor the air adjustments are factory set. The furnace is fire-tested and the limit control is checked to make sure it functions properly; no factory settings are made. During installation, the furnace must be adjusted to ensure proper operation. The installing dealer/contractor must have and use proper test equipment in order to correctly adjust the oil furnace. The use of test equipment is more critical than ever due to tighter tolerances needed to keep the furnace operating efficiently.

Among the test equipment for an oil furnace, the proper combustion test kit should contain the following:

- Draft gauge
- CO_2 or O_2 analyzer
- Smoke tester
- Pressure gauge
- High temperature thermometer
- Oil vacuum gauge
- Beckett T-501 or Z-2000 nozzle gauge
- Knowledge of proper test equipment operation

⚠ CAUTION

Improper nozzle and/or air adjustment of this unit may result in sooting problems. Refer to the following section for correct adjustment procedures.

Nozzle Adjustment

Proper adjustment of the nozzle assembly is critical. Before the flue pipe and oil lines are installed, the nozzle assembly must be checked for proper depth and alignment. You must remove the entire burner assembly (not just the nozzle) from the furnace to check the nozzle depth and alignment. The smaller sized firing nozzle has been factory-installed. This should be verified by the installer. A larger nozzle has been provided in the bag assembly for use with ELO183DH114 and 150 units. Inspect the spark transformer leads also to ensure they are still attached to the electrodes.

The burner assembly is attached to the vestibule panel by three nuts. Slots are provided in the mounting flange for removing the burner assembly from the vestibule. Loosen the nuts and turn the whole burner assembly clockwise (figure 5) to remove the entire burner assembly from the furnace. There is adequate wire to remove the burner without disconnecting wires. Once removed, turn the burner around in the vest panel area.

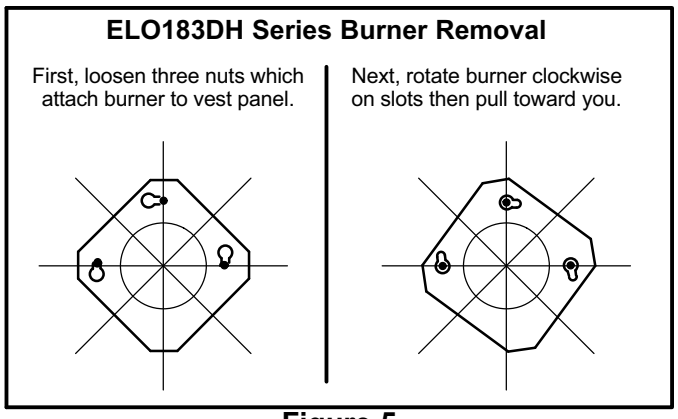

Figure 5

To correctly check and adjust the nozzle depth and alignment, use the Beckett T-501 or Z-2000 gauge.

To check the oil nozzle depth, insert the small end of the gauge into the end of the cone and measure from the flat of the end cone to the face of the nozzle. When nozzle depth is correct, the tip of the nozzle should just touch the end of the gauge. Refer to the illustration sheet provided with the gauge. Note that the scale side of the gauge is not used for this purpose. If necessary, loosen the escutcheon plate securing screw and slide the entire nozzle assembly forward or backward within the air tube (figure 6). Re-secure escutcheon plate screw when adjustment is completed.

To check nozzle alignment, again insert the small end of gauge into the end cone and measure the nozzle and electrode alignment against the center lines marked on the gauge (again refer to enclosed illustration sheet). If the nozzle is not centered, but found to be too far left or right, a new nozzle assembly will need to be ordered. Do not attempt to adjust by bending the 90 degree elbow in the oil line.

Take care to properly re-install burner assembly when nozzle adjustment has been completed.

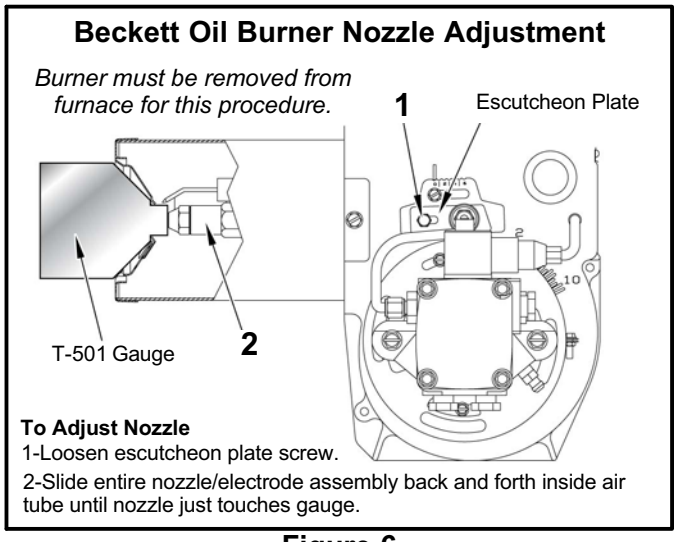

Figure 6

Indoor Coil Placement

In cooling / heat pump applications, Lennox recommends that the indoor coil be installed at least 4 inches above the top of the furnace cabinet to allow proper airflow. If coil cabinet does not provide proper clearance, use field-fabricated transition.

Venting

⚠ WARNING

Combustion air openings in front of the furnace must be kept free of obstructions. Any obstruction will cause improper burner operation and may result in a fire hazard.

⚠ WARNING

The barometric draft control shall be in the same atmospheric pressure zone as the combustion air inlet to the furnace. Deviation from this practice will cause improper burner operation and may result in a fire hazard.

⚠ CAUTION

Do not store combustible materials near the furnace or supply air ducts. The material (such as paint, motor oil, gasoline, paint thinner, etc.) may ignite creating a fire hazard.

⚠ WARNING

This furnace is certified for use with type "L" vent. "B" vent must not be used with oil furnaces.

Prior to installation of unit, make a thorough inspection of the chimney to determine whether repairs are necessary. Make sure the chimney is properly constructed and sized according to the requirements of the National Fire Protection Association. The smallest dimensions of the chimney should be at least equal to the diameter of the furnace vent connector. Make sure the chimney will produce a steady draft sufficient to remove all the products of combustion from the furnace. A draft of at least .04" w.c. (9.9 Pa) is required during burner operation.

1. Local building codes may have more stringent installation requirements and should be consulted before installation of unit.
2. The vent connector should be as short as possible.
3. The vent connector should not be smaller than the outlet diameter of the vent outlet of the furnace.
4. Pipe should be at least 24 gauge galvanized.
5. Single wall vent pipe should not run outside or through any unconditioned space.
6. Chimney should extend 3 feet (0.9 m) above highest point where the vent passes through the roof, and 2 feet (0.6 m) higher than any portion of a building within a horizontal distance of 10 feet (3 m).
7. The vent must not pass through a floor or ceiling. Clearances to single wall vent pipe should be no less than 6" (152 mm); more if local codes require it.
8. The vent may pass through a wall where provisions have been made for a thimble as specified in the Standards of the National Board of Fire Underwriters. See figure 7.

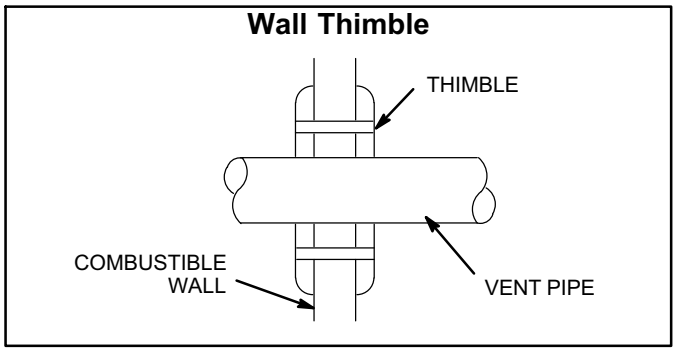

Figure 7

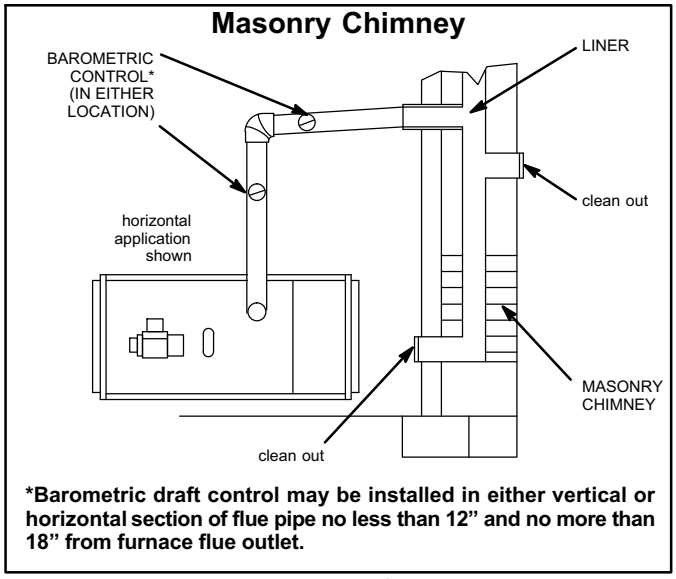

Figure 8

9. The vent pipe should slope upward toward the chimney on horizontal run at least 1/4 inch (6 mm) to the foot (0.3 m) and should be supported by something other than the furnace, such as isolation hangers.
10. Extend the vent pipe into the chimney so that it is flush with the inside of the vent liner. Seal the joint between the pipe and the liner.
11. The furnace shall be connected to a factory-built chimney or vent complying with a recognized standard, or masonry or concrete chimney lined with a lining material acceptable to the authority having jurisdiction.
12. When two or more appliances vent into a common vent, the area of the common vent should not be less than the area of the largest vent or vent connection plus 50% of the areas of the additional vent or vent connection. Chimney must be able to sufficiently vent all appliances operating at the same time.

13. The vent pipe shall not be connected to a chimney vent serving a solid fuel appliance or any mechanical draft system.
14. All unused chimney openings should be closed.
15. All vent pipe run through unconditioned areas or outside shall be constructed of factory-built chimney sections. See figure 9.
16. Where condensation of vent gas is apparent, the vent should be repaired or replaced. Accumulation of condensation in the vent is unacceptable.
17. Vent connectors serving this appliance shall not be connected into any portion of mechanical draft systems operating under positive pressure.
18. Keep the area around the vent terminal free of snow, ice and debris.

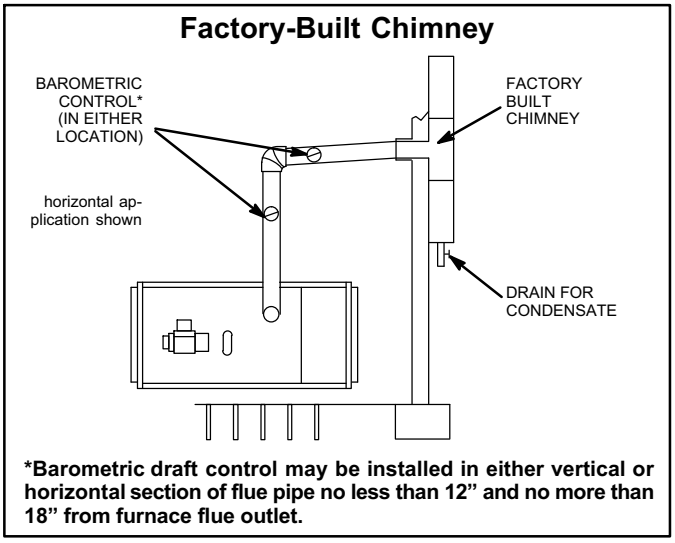

Figure 9

Removal of Unit from Common Venting System

In the event that an existing furnace is removed from a venting system commonly run with separate appliances, the venting system is likely to be too large to properly vent the remaining attached appliances. The following test should be conducted while each appliance is in operation and the other appliances not in operation remain connected to the common venting system. If venting system has been installed improperly, the system must be corrected as outlined in the previous section.

1 - Seal any unused openings in the common venting system.

2 - Visually inspect venting system for proper size and horizontal pitch and determine there is no blockage or restriction, leakage, corrosion or other deficiencies which could cause an unsafe condition.

3 - Insofar as is practical, close all building doors and windows and all doors between the space in which the appliances remaining connected to the common venting system are located and other spaces of the building. Turn on clothes dryers and any appliances not connected to the common venting system. Turn on any exhaust fans, such as range hoods and bathroom exhausts, so they will operate at maximum speed. Do not operate a summer exhaust fan. Close fireplace dampers.

4 - Following the lighting instruction on the unit, place the appliance being inspected in operation. Adjust thermostat so appliance will operate continuously.

5 - Test for spillage using a draft gauge.

6 - After it has been determined that each appliance remaining connected to the common venting system properly vents when tested as outlined above, return doors, windows, exhaust fans, fireplace dampers and any other fuel burning appliance to its previous condition of use.

7 - If improper venting is observed during any of the above tests, the common venting system must be corrected.

Flue Connections

⚠ IMPORTANT

When flue pipe is installed at less than minimum clearance listed in tables 2 and 3, radiation shields must be installed. See figure 10.

Use 24 gauge or heavier galvanized smoke pipe and fittings to connect furnace to vent. Maintain rise of at least one inch per foot. Connect flue pipe to chimney using the least number of elbows and angles possible. Flue pipe or vent connector must be inserted into but not beyond the outside wall of the chimney flue. No reduction in diameter of flue pipe is acceptable. It is best to have flue pipe as short and direct as possible.

Where two or more appliances vent into a common flue, the area of the common flue should be at least equal to the area of the largest flue or vent connector, plus 50% of the area of any additional flues or vent connectors. Install barometric draft control (provided) and flue pipe according to instructions packed with control.

Inspect flue pipe annually. Clean soot or ash from flue pipe, if necessary. If pipe is rusted, replace.

Radiation Shield Installation

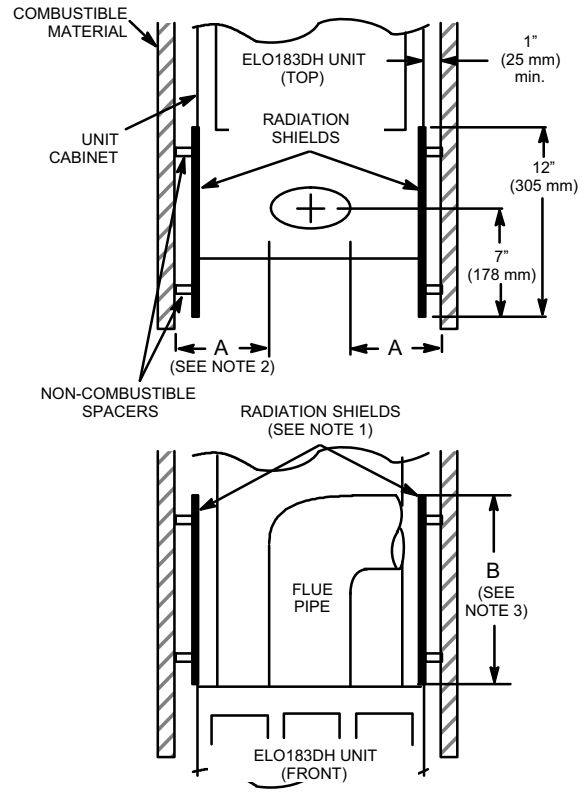

NOTE 1-Radiation shields must be constructed of 24 gauge sheet metal minimum.

NOTE 2-Radiation shields required when A is less than 9" (229mm).

NOTE 3-Radiation shields should extend from the top of the unit to the top of the flue pipe.

Figure 10

Barometric Draft Control Installation

Install the provided barometric draft control in the flue pipe **at least 12 inches** beyond the furnace flue outlet to provide space for flue gas sampling. The barometric draft control may be installed in either vertical or horizontal sections of the flue pipe; however, it should be positioned **no more than 18"** beyond the furnace flue outlet. Follow the instructions packed with the barometric draft control.

Supply & Return Air Plenums

NOTE - Following these suggestions when installing supply and return air plenums.

1. Use sealing strips of fiberglass.
2. In all cases, the plenum should be secured to furnace or evaporator cabinet with sheet metal screws.
3. Both supply and return air plenums shall be square and least 18" long. They should be the same dimension as the furnace opening.
4. If unit is installed in a confined space such as a utility room where there is no complete return air duct system, a return air connection should be run (the same size as the return air opening) to a location outside the room containing the furnace.
5. Install supply and return air ducts as desired.

Optional Filter Kit

An Optional filter kit is available for ELO183DH units. Kit 35K05 is used with ELO183DH-101/114 units, and kit 35K06 is used with ELO183DH-135/150 units. All kits include the following:

- 2 filters
- 3 rods
- 7 screws
- 1 rack assembly
- 1 panel

ELO183DH Filter Rack Installation

1. Slide filter rack over return duct flanges.
2. Using a scriber through the filter rack mounting holes, mark seven mounting hole locations in the return end of the cabinet. See figure 11.
3. Remove filter rack and drill 1/8" diameter holes at the marked positions.
4. Place filter rack in position again and secure it to the cabinet using the sheet metal screws provided. Clearance for the screw driver is provided in outside holes of rack and in filter support angles.
5. Bend the ends of filter rods and hook ends through holes provided in top and bottom filter support angles.
6. Slide filter between the support angles and the plenum side for the filter rack. The filter rods hold the filter in place.

ELO183DH Optional Filter Kit

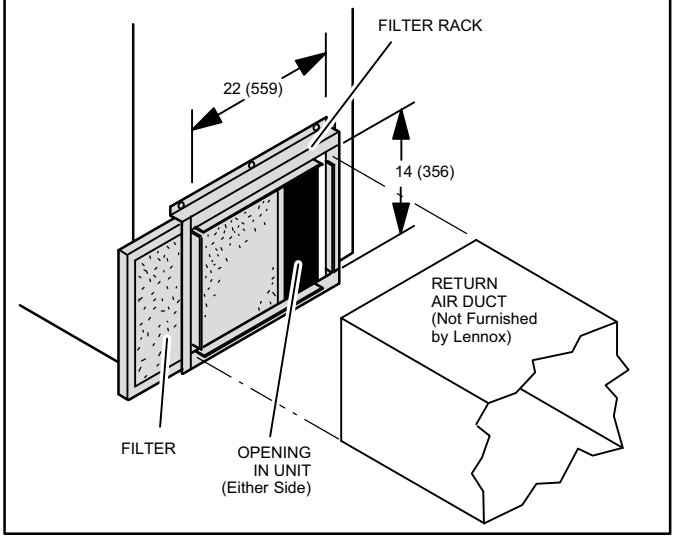

Figure 11

Oil Supply Line Sizing

Ensure that the restrictions of the piping system, plus any lift involved, do not exceed the capability of the oil pump. Use the following guidelines when determining whether to use a single-or two-stage oil pump.

One-Pipe System

When using a one-pipe system even with the oil tank that is above the burner and a vacuum of 6" (152 mm) Hg or less, a single-stage fuel pump with a supply line should be adequate without a separate return line. See figure 12.

Manual bleeding of the fuel pump is required on initial start up. Failure to bleed air from the oil pump could result in an air lock/oil starvation condition.

NOTE - As an extra precaution, cycle heating on and off ten times after bleeding air from the oil pump. This will eliminate air in the gun assembly.

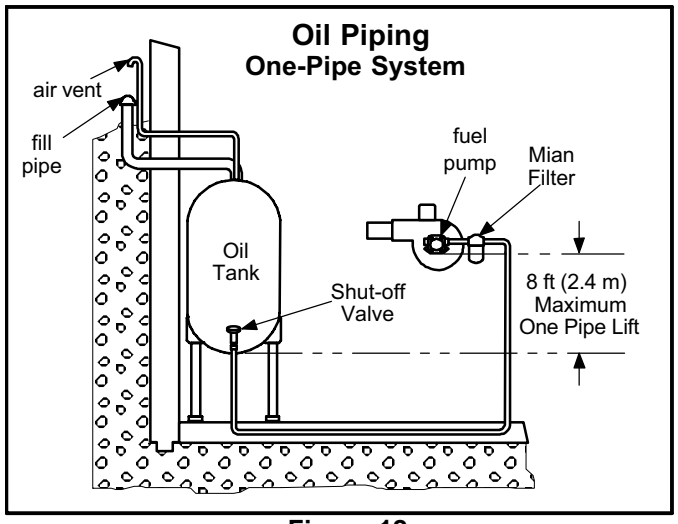

Figure 12

To determine the correct tubing size for piping, refer to table 4.

Table 4
One-Pipe Oil Line Sizing

Line Length	Pipe Diameter (OD Tubing)
0-50' (15 m)	3/8" (10 mm)
51-100' (15 m)	1/2" (12 mm)

Two-Pipe System

When using a two-pipe system with the oil tank below the level of the burner, use a single-stage fuel pump in lift conditions of up to 10 feet (3 m) and/or a vacuum of 10" (254 mm) Hg or less. See figure 13. Use a two-stage fuel pump when lift exceeds 10 feet (3 m) and/or a vacuum of 12" Hg to 17" Hg. Both conditions require that you use of a two-pipe system, which consists of a return line that purges the fuel pump of air by returning it to the tank. To determine the run and lift for piping, refer to table 5.

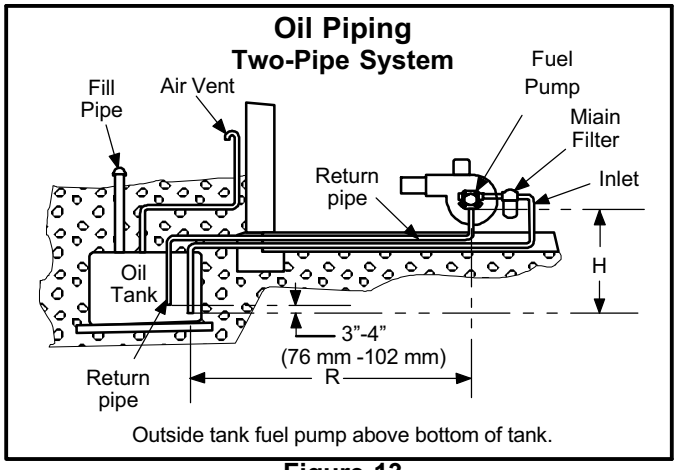

Figure 13

Use continuous lengths of heavy wall copper tubing or steel pipe for oil supply pipe. Install oil supply pipe under floor or near walls to protect it from damage. Avoid running pipes along joists or reverberating surfaces. Always use flare fittings. All fittings must be accessible. Do not use compression fittings.

⚠ IMPORTANT

Both oil supply and return pipes must be submerged in oil in the supply tank.

Table 5
Two-Pipe Maximum Pipe Length (H + R)

Lift "H"	3450 RPM - 3 GPH (11.4 LPH)			
	3/8" (10 mm) OD Tubing		1/2" (12 mm) OD Tubing	
	Single Stage	Two Stage	Single Stage	Two Stage
0' (0.0 m)	84' (25.6 m)	93' (28.3 m)	100' (30.5 m)	100' (30.5 m)
2' (0.6 m)	73' (22.3 m)	85' (25.9 m)	100' (30.5 m)	100' (30.5 m)
4' (1.2 m)	63' (19.2 m)	77' (23.5 m)	100' (30.5 m)	100' (30.5 m)
6 ' (1.8m)	52' (15.8 m)	69' (21.0 m)	100' (30.5 m)	100' (30.5 m)
8' (2.4 m)	42' (12.8 m)	60' (18.3 m)	100' (30.5 m)	100' (30.5 m)
10' (3.0 m)	31' (9.4 m)	52' (15.9 m)	100' (30.5 m)	100' (30.5 m)
12' (3.7 m)	21' (6.4 m)	44' (13.4 m)	83' (25.3 m)	100' (30.5 m)
14' (4.3 m)	---	36' (11.0 m)	41' (12.5 m)	100' (30.5 m)
16' (4.9 m)	---	27' (8.2 m)	---	100' (30.5 m)
18' (5.5 m)	---	---	---	76' (23.2 m)

Table 6
Fuel Pump Usage

Pump	Piping Application	Maximum Lift (vacuum)
Single-Stage Pump	One-Pipe System	8 ft. (6” Hg vacuum)
	Two-Pipe System	10 ft. (12” Hg vacuum)
Two-Stage Pump	Two-Pipe System	10 ft. or greater (12” to 17” Hg vacuum)

Oil Supply Line & Filter Connections

One-Pipe Systems

⚠ CAUTION

Do not install the bypass plug into the pump on one-pipe systems.

The burner is shipped with fuel pump set for one-pipe operation. For one-pipe systems, the oil supply pipe is connected to the inlet tap on the pump. A one-pipe system should only be used where there is gravity oil flow to the pump and the pipe is not run at any point above the oil level in the tank.

1 - Connect the inlet pipe to the pump inlet. Start the burner.
2 - Set the primary burner control for continuous operation during purging.
3 - Turn the bleed valve one turn counterclockwise to open.
4 - Bleed the unit until all air bubbles disappear.
NOTE - Hurried bleeding will prevent the unit from operating properly.
5 - Tighten the bleed valve securely.

Two-Pipe Systems

If the installation requires a two-pipe operation, install the bypass plug included in the bag which is attached to the pump. To convert the pump, install the bypass plug according to the provided pump instructions. Notice in the two-pipe system the return pipe must terminate in the tank 3” (76 mm) to 4” (102 mm) above the supply inlet. Ensure the return pipe terminates at the correct measurement or air may escape into the system. This could result in loss of prime.

NOTE- If using an outside tank in cold climates a number one fuel or an oil treatment is strongly recommended.

1 - Remove 1/4” plug from return port.
2 - Insert bypass plug and tighten it. See figure 13.
3 - Attach the return and inlet pipes. Start the burner. Air bleeding is automatic.
NOTE - If a faster bleed is necessary, open the bleed valve.
4 - The return pipe must terminate 3” to 4” above the supply pipe inlet. See figure 13.
NOTE - If the return pipe does not terminate where it should, air may enter the system, and prime may be lost.

An oil filter is required for all models. Install a field supplied oil filter inside the building between the tank shut-off valve and the burner. Locate filter close to burner for easy maintenance. Table 7 lists the filters for the ELO183DH furnace.

Table 7

Oil Filters	Cat. Number
10 micron filter (no mounting bracket)	81P89
10 micron filter (mounting bracket)	53P92
10 micron replacement cartridge for filter, 45 gph	53P93
Filter restriction indicator gauge	53P90

Consult burner manufacturer's instructions packaged with unit for further details concerning oil supply pipe connections.

Leak Check

After oil piping is completed, carefully check all piping connections (factory and field) for oil leaks.

Oil Line Heater (Optional)

A heater for the oil line is available for applications that are located in cold climates. The heater warms the oil pipe to assist the initial start-up. An oil line heater is available from Beckett using part number 51621 (Beckett Start Helper).

Electrical Wiring

All wiring must conform to the National Electric Code (NEC), or Canadian Electric Code (CEC) and any local codes.

1 - Refer to the appliance rating plate for proper fuse size.
2 - Install the room thermostat and make wire connections to the control. Avoid installing thermostat on an outside wall or where it can be affected by radiant heat. Set the adjustable heat anticipator on thermostat according to the wiring diagram sticker provided on unit.
3 - Install a separate fused disconnect switch near unit so power can be shut off for servicing.

4 - Complete line voltage wiring from disconnect switch near unit to make-up box.

NOTE - An equipment ground screw is provided. Refer to unit wiring diagram. Ground unit using a suitable ground wire.

⚠ WARNING

Run 24V Class II wiring only through specified low voltage opening. Run line voltage wiring only through specified high voltage opening. Do not combine voltage in one opening.

⚠ CAUTION

Use copper conductors only.

⚠ IMPORTANT

If using a programmable thermostat, be sure to use a type of thermostat that retains its memory in event of a power loss.

Typical ELO183DH Wiring Diagram

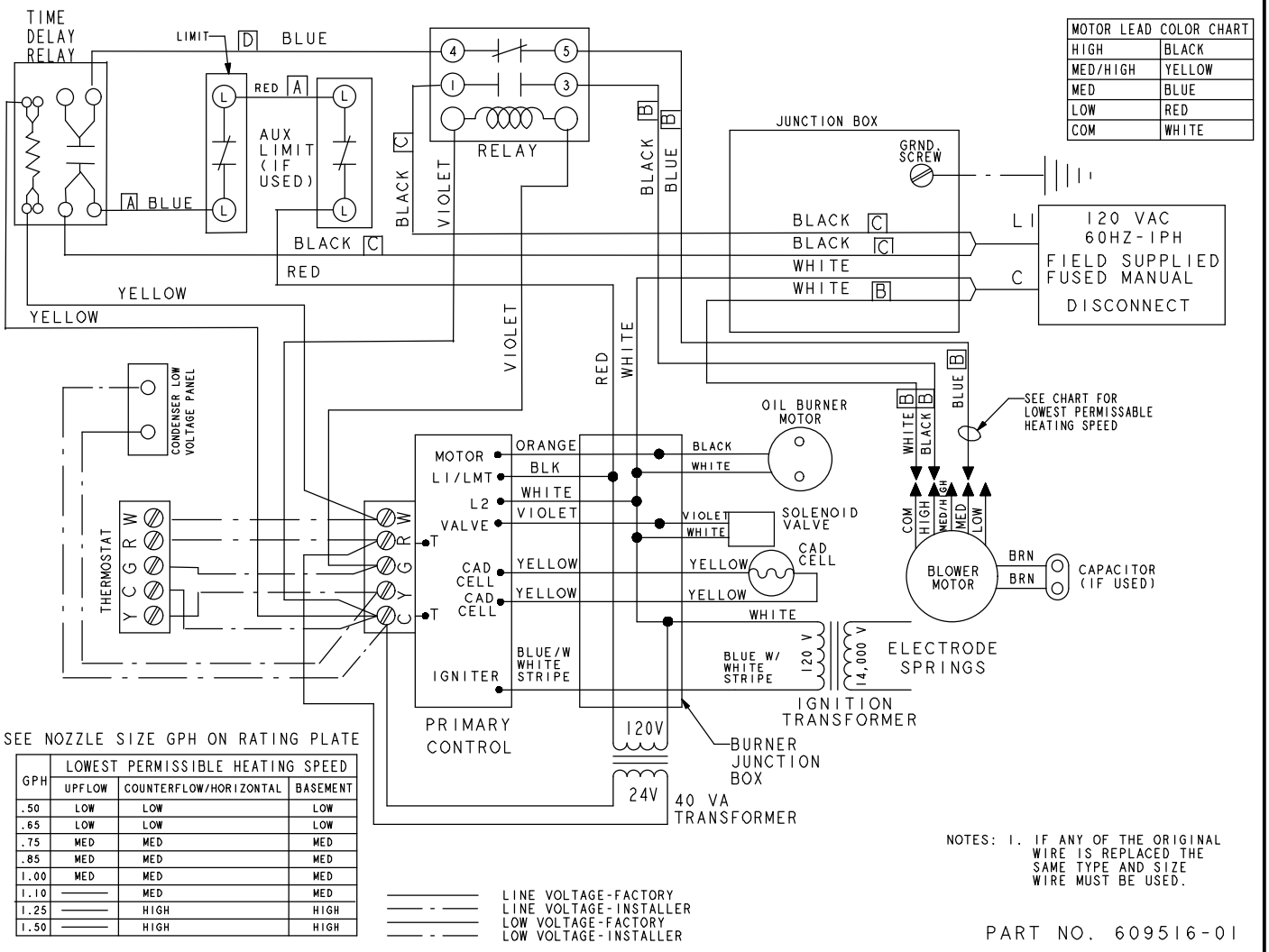

Figure 14

Unit Start-Up & Adjustments

Before starting unit, make sure the oil tank is adequately filled with clean No. 1 or No. 2 furnace oil.

NOTE - Water, rust or other contaminants in oil supply system will cause malfunction and failure of the internal parts of the fuel pump.

⚠ CAUTION

Never burn garbage or paper in the heating system. Never leave papers near or around the unit.

⚠ CAUTION

Blower access door must be in place before start-up.

Burner Start-Up

1 - Set thermostat for heating demand and turn on electrical supply to unit.

2 - Open all shut-off valves in the oil supply line to the burner.

3 - While the ignition is on, press and release the reset button on the burner control (hold 1/2 second or less).

4 - Bleed the pump until all froth and bubbles are purged. The bleed port is located on the bottom of the fuel pump. To bleed, attach a clear plastic hose over the vent plug. Loosen the plug and catch the oil in an empty container. Tighten the plug when all the air has been purged.

NOTE - A two-line fuel system will normally bleed itself by forcing air back to the tank through the return line. This type of bleeding procedure is not necessary.

5 - If burner fails to start within the set time, the burner control will lock out operation. Press the reset button to reset the control as in step 3. See figure 2 for burner parts arrangement.

⚠ CAUTION

Do not push the reset button on the primary control more than one time.

6 - If 2 pipe system fails to prime after pressing the reset button one time, use the manual bleed port to prime the pump.

Fuel Pump Pressure Adjustment

Measure fuel pump pressure with unit off. Attach pressure gauge to pump outlet. Turn unit on and check pressure and compare to table 9. Adjust if necessary.

Temperature Rise Adjustment

To measure temperature rise, place plenum thermometers in warm air and return air plenums. Locate thermometer in warm air plenum where thermometer will not “see” the heat exchanger to prevent it from picking up radiant heat. Set thermostat to its highest setting to start unit. After plenum thermometers have reached their highest and steadiest readings, subtract the readings. The difference in temperatures in the supply and return air plenums should approximate the temperatures listed in table 8 and on the appliance rating plate.

If the temperature rise is not within the range listed, check the following items:

- Make sure that properly sized nozzle has been used (table 9).
- Make sure that fuel pump pressure is correct.
- If furnace is in cutback mode, check for:
  Dirty filters,
  Dirty indoor coil,
  Restricted ducts, closed registers, etc.

Table 8
Temperature Rise

Unit	Temperature Rise °F
ELO183DH101	65 - 75
ELO183DH114	70 - 80
ELO183DH135	65 - 75
ELO183DH150	70 - 80

Table 9
Burner Specifications

Unit	Burner Number	Beckett Spec. No.	Beckett Air Tube Part No.	Input Rating BTU/HR	Nozzle Size, Spray, Angle, & Pattern	Pump Pressure	Head	Insertion Length	Static Plate Diameter
ELO183DH101/114	100591-05	ARM2008	AF46XNHS	105,000	0.65gph X 80° B	140	F3	5	2.75
ELO183DH101/114	100591-05	ARM2008	AF46XNHS	120,000	*0.75gph X 80° B	140	F3	5	2.75
ELO183DH135/150	100591-06	ARM2009	AF46WPHS	140,000	0.85gph X 80° B	140	F4	5	3.38
ELO183DH135/150	100591-06	ARM2009	AF46WPHS	150,000	*1.00gph X 80° B	140	F4	5	3.38

**Nozzle must be field-installed for conversion to higher heating input.*

NOTE - All nozzles are Delavan brand

Fan Delay

Fan on time is 1 to 30 seconds and non adjustable. Fan off time is 60 to 120 seconds and non adjustabe.

Limit Control

Limit Control — Do not adjust from factory setting.

Burner Adjustment

The following instructions are essential to the proper operation of ELO183DH series oil furnaces. To prevent sooting and prevent premature failure of the heat exchanger,, these instructions must be followed in sequence:

1. **Draft**—This test should be taken at the breach between the outlet of the vent connector and the barometric draft control. Generally a 1/4" hole will need to be drilled for the draft gauge to be inserted into the vent connector.

   A minimum of 0.03 draft must be established without the burner in operation. With the burner in operation, the draft should be 0.04 to 0.05. This is VERY critical to the flame retention head burners.

   Oil furnace installations also require careful inspection to make sure the chimney is in good shape and can accommodate the products of combustion. The temperature in the unconditioned space will also affect the draft if long vent connectors are allowed to get too cold.
2. **Overfire Draft**—This test should be taken with the burner in operation. Remove the plug from the center of the inspection port. Insert your draft gauge into the hole.

   A reading of the overfire draft should be 0.02 less than the reading found in the vent connector. If a positive reading is seen at this point, the combustion fan is pumping too much air into the heat exchanger. Make the necessary adjustments with the air shutter or air band.
3. **Smoke Test**—The smoke test should be taken at the hole drilled in step 1.

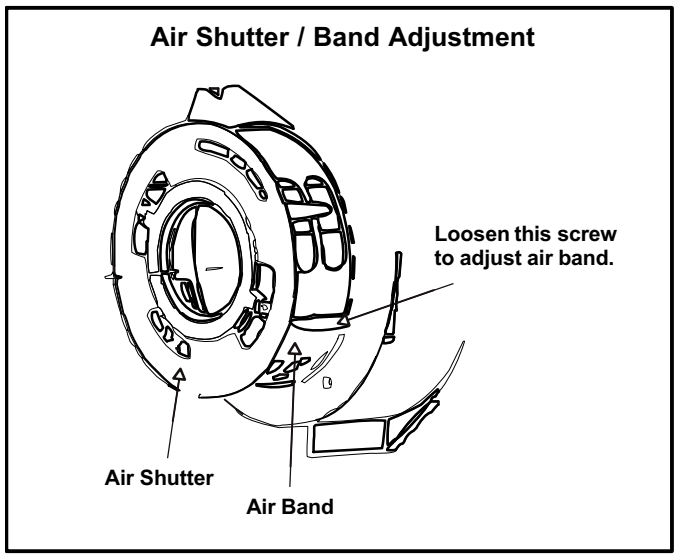

Figure 15

   Using a smoke test gun, adjust the air so that you will have just a trace (between 0 and #1) of smoke. If the burner is producing more than #1 smoke, adjust the air shutter (primary) and air band (secondary) to reduce the smoke. See figure 15. To adjust the air shutter, loosen the top screw on the air shutter (and lower screw, if necessary). Then, rotate the shutter until the desired smoke level is achieved. If smoke cannot be reduced to the desired level by moving the air shutter, adjust the air band to increase the air. To adjust the air band, loosen the air band screw and rotate the band.**This is the *starting* point. Do not stop here.**
4. **CO_2 Test**—Again, take this sample at the vent pipe.

   With the unit firing at a trace of smoke, take a sample of the CO_2. From the results of this test, a "window of operation" will be determined. This window of operation establishes some tolerance. The tolerance the installer builds in provides room within the set-up for those things which might affect combustion. Those things which might affect combustion can then do so without causing the unit to start sooting/smoking. Things which might affect combustion include a nozzle going bad, draft that changes during different climatic conditions, dirty oil, dirt obstructing the air inlet, etc.

   To build in a "window of operation," set up the burner to be 2% less in CO_2. For example, if you find a reading of 12% CO_2, adjust the air shutter (and air band, if necessary) to increase the air and drop the CO_2 to 10%.
5. **Retest the Smoke**—With a drop in the CO_2 and increase in the air you should see that the smoke has returned to 0.
6. **Retest the Overfire Draft**—This test serves to confirm that you have not increased the air too much. Again you do not want a positive pressure at the test port. It should still be 0.02 less than the draft pressure reading taken at the breach. You may need to increase the stack draft by adjusting the barometric draft control.
7. **Stack Temperature**—Take a stack temperature reading in the vent pipe. Subtract the room air temperature from the stack temperature. This will give you the net stack temperature. Use the efficiency charts provided in most CO_2 analyzers to determine furnace efficiency.
8. When the proper combustion and smoke readings have been achieved, re-tighten the air shutter screw(s) and air band screw.

Service

Servicing Filter

NOTE - Under no circumstances should the access panels to the blower compartment be left off or left partially open.

1. Throw-Away Type Filters — Filters should be checked monthly and replaced when necessary to assure proper furnace operation. Replace filters with like kind and size filters.

2. Reusable Type Filters — Filters should be checked monthly and cleaned when necessary to assure proper furnace operation. Use warm water and a mild detergent. Replace filter when dry. Permanent filters supplied with ELO183DH furnaces do not require oiling after cleaning. Examine filter label for any for special instructions that may apply.

Servicing Blower

Blower motor is pre-lubricated and sealed for extended operation. No further lubrication is required. Disconnect power to unit before cleaning blower wheel for debris.

Servicing Nozzle

Replace nozzle every year to to ensure proper operation. Clogged nozzles will result in improper firing or non-firing of unit.

Flue Pipe Inspection

The flue pipe should be inspected annually by a qualified service technician. Remove and clean any soot or ash found in the flue pipe. Inspect pipe for holes or rusted areas. If replacement is necessary, replace with the same size and type as required by code. Inspect the flue draft control device and replace if found defective.

Cleaning Heat Exchanger

1. Remove the vent pipe from the furnace.
2. Remove the locking screws and the caps from the clean-out tubes. Remove flue access elbow.
3. Using a long spiral wire brush, sweep down the outer drum of the heat exchanger. Then using the hose attachment, vacuum out loose debris.
4. Remove the locking screw and cap from the observation tube and with the spiral wire brush, reach upward toward the rear of the heat exchanger to clean out the crossover tube.

⚠ CAUTION

Do not attempt to clean the combustion chamber. It can be easily damaged.

5. Replace the clean-out caps and flue access elbow. Make sure locking screws are secure.
6. Brush out and vacuum the vent outlet area of the outer drum and replace vent pipe.
7. Clean around burner, blower deck and vestibule area.

NOTE - A heat exchanger clean-out kit ABRSH380 (35K09) is available from Lennox. The kit includes a radiator brush, a tapered brush and a non-metallic 36" spiral wire handle.

GeniSys™ Primary Burner Control

ELO183DH units are equipped with the Beckett GeniSys™ 7505B primary burner control. The control is positioned on the upper right-hand side of the Beckett AFG burner assembly. The control includes a reset button and three status lights. See figure 16 for location of reset buttons and status lights. Table 10 details reset button operation. Table 11 details status light function.

Additional information on the GeniSys™ 7505B primary burner control is provided with this furnace.

Beckett GeniSys™ 7505B Primary Burner Control

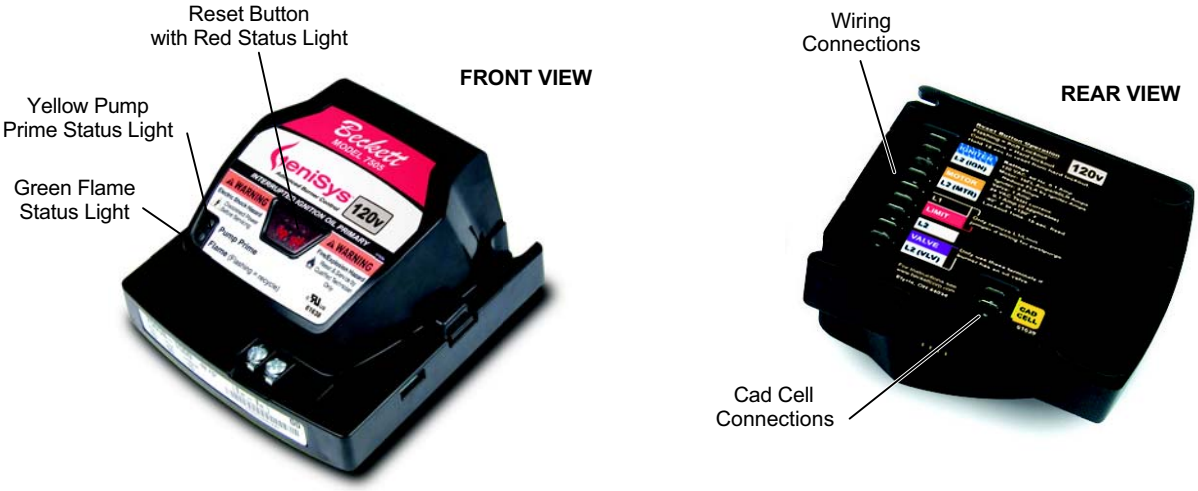

Figure 16

Table 10
Reset Button Operation

If the burner is in the below state:	Pushing the reset button will:		
	Button Click (press < 1 second)	Button Hold (press > 1 second)	Button Hold (press 15+ seconds)
Lockout	Reset from Soft Lockout		Reset from Restricted (Hard) Lockout
Valve-on Delay, Trial for Ignition, Ignition Carryover	Go to pump prime (see "Priming the Pump" above)	Disable the Burner: Any time the burner is running, press and hold the reset button to disable the burner. The burner will remain off as long as the button is held.	Enables pump priming After the reset button has been held for 15 seconds. The button can then be clicked during the next ignition sequence to enter pump prime mode.
Run (igniter is shut off)	No action		
	No action		
Pump Prime	No action	Exit Pump Prime mode and return to Standby	

Table 11
Status Light Function

Light Color	On Continuously	Flashing
Red	Restricted (Hard) Lockout	Soft Lockout
Green	Flame Sensed during normal operation (Could be stray light during standby)	Recycle
Yellow	Control is in pump prime mode ***or*** Reset button currently held for 15+ seconds.	N/A

Heating Sequence - Actions & Responses

1. **Action: Thermostat calls for heat** (W terminal is energized)
   Response:
   - Primary control is energized.
   - After 15-second prepurge, power is sent to the oil delay valve, ignition occurs and flame is established.
   - Igition sequence continues for 10 seconds after flame is sensed. Oil will continue to flow as long as cad cell senses flame.
   - Heat fan on timing (1 to 30 seconds) begins. When timing is complete, the indoor blower is at heat speed and warm air is delivered to the controlled space.
2. **Action: Thermostat ends call for heat** (W terminal is de-energized)
   Response:
   - After the thermostat is satisfied, the thermostat circuit opens. The oil delay valve and burner are de-energized.
   - Burner is de-energized.
   - Heat fan off timing (60 to 120 seconds) begins. When timing is complete, indoor blower is de-energized.
3. **Action: Burner fails to light**
   Response:
   - Oil primary control enters soft lockout after ignition failure (15 seconds without flame being sensed). Push reset button on primary control for one second to reset soft lockout.
   - After soft lockout reset, oil primary control allows second ignition attempt. Primary control enters hard lockout after second ignition failure (15 seconds without flame being sensed). Push reset button on primary control for 15 seconds until light on control turns yellow to reset hard lockout.
   - Burner motor is de-energized.
4. **Action: Established flame fails**
   Response:
   - Burner motor is de-energized and oil primary control goes into recycle mode.
   - If the fan off delay is longer than the recycle timing, the indoor blower continues to run on heating speed through the next trial for ignition.
5. **Action: Limit Switch Opens**
   Response:
   - Oil primary control de-energizes burner.
   - Indoor blower is energized immediately at cool speed.
   - Oil primary control is de-energized.
   - Indoor blower runs as long as limit stays open.
6. **Action: Limit Switch Closes**
   Response: If there is a heating demand, oil primary control and ignition sequence begins.

Troubleshooting

Burner failure or improper operation can result from a number of different causes. Often the cause can be pinpointed by observing the different types of failure or by the process of elimination.

The following troubleshooting charts list some failures, causes and a sequence of steps to isolate the point of failure. Check the simplest and most obvious items before progressing to other items.

Troubleshooting: Fan operating sequence

Action	System Response
Thermostat calls for heat. (W terminal is energized.)	Oil primary control is energized. Ignition system and oil primary control start the furnace. Oil flows as long as cad cell senses flame. Burner motor is energized and heat fan on delay timing begins. When timing is complete, the circulating fan is energized at heat speed and warm air is delivered to the controlled space.
Thermostat ends call for heat. (W terminal is de-energized.)	Oil primary control is de-energized, terminating the burner cycle. Heat fan off delay (60 to 120 seconds) timing begins. When timing is complete, the circulating fan is de-energized. Oil primary control and circulating fan are off.
Burner fails to light.	Oil primary control locks out within lockout timing (timing depends on oil primary control). Burner motor is de-energized. If heat fan has started, it continues through the delay off period.
Established flame fails.	Burner motor is de-energized and oil primary control goes into recycle mode. If heat fan off delay is longer than the recycle delay timing, the heat fan continues to run through the next trial for ignition.
Thermostat begins call for cool. (G and Y terminals are energized.)	Circulating fan is energized at the cool speed. Cooling compressor turns on immediately.
Thermostat ends call for cool. (G and Y terminals are de-energized.)	Circulating fan and cooling compressor turn off immediately.
Thermostat begins call for fan. (G terminal is energized.)	Circulating fan is energized immediately at cool speed.
Thermostat ends call for fan. (G terminal is de-energized.)	Circulating fan is de-energized.
Limit switch string opens.	Oil primary control shut off the burner. Circulating fan is energized immediately at heat speed. Oil primary control is de-energized. Circulating fan runs as long as limit string stays open. If there is a call for cooling or fan, the circulating fan switches from heat speed to cool speed.
Limit switch string closes.	Heat fan off delay (60 to 120 seconds) begins. Circulating fan turns off after the selected heat fan off delay timing. Oil primary control is energized, initiating burner light off.
Continuous circulating fan is connected. (Optional connectors are available for separate circulating fan speed tap.)	Circulating fan is energized at low speed when there is no call for heat, cool or fan.
Humidity control is connected. (Optional connectors are available for 120 Vac humidifier.)	Humidifier connections are energized when the burner motor is energized.

Troubleshooting: Burner fails to start.

Source	Procedure	Causes	Correction
Thermostat	Check thermostat settings.	Thermostat in **OFF** or **COOL**	Switch to **HEAT**.
		Thermostat is set too low	Turn thermostat to higher temperature.
Safety Overloads	Check burner motor, primary safety control, & auxiliary limit switch.	Burner motor overload tripped	Push reset button pump motor.
		Primary control tripped on safety	Reset primary control.
		Auxiliary limit switch tripped on safety	Reset auxiliary limit.
Power	Check furnace disconnect switch & main disconnect.	Open switch	Close switch.
		Blown fuse or tripped circuit breaker	Replace fuse or reset circuit breaker.
Thermostat	Touch jumper wire across TR-TW terminals on primary control. If burner starts, then fault is in the thermostat circuit.	Broken or loose thermostat wires	Repair or replace wires.
		Loose thermostat screw connection	Tighten connection.
		Dirty thermostat contacts	Clean contacts.
		Thermostat not level	Level thermostat.
		Faulty thermostat	Replace thermostat.
		Open circuit in wiring between fan relay and oil primary control.	Check wiring between fan relay and oil primary control.
Cad Cell	Disconnect the flame detector wires at the primary control. If the burner starts, fault is in the detector circuit.	Flame detector leads are shorted	Separate leads.
		Flame detector exposed to light	Seal off false source of light.
		short circuit in the flame detector	Replace detector.
Primary Control	Place trouble light between the orange and white leads. No light indicates that no power is going to the control.	Primary or auxiliary control switch is open	Check adjustment. Set the maximum setting.
			Jumper terminals; if burner starts, switch is faulty, replace control.
		Open circuit between disconnect switch and limit control	Trace wiring and repair or replace it.
		Low line voltage or power failure	Call the power company.
	Place trouble light between the orange and white leads. No light indicates faulty control.	Failed internal control circuit	Replace the control.
Burner	Place the trouble light between the orange and white leads to the burner motor. No light indicates that no power is getting to the motor.	Blown fuse	Replace the fuse.
	Place trouble light between the black and white leads to the blower motor. Light indicates power to the motor and burner fault.	Binding burner blower wheel	Turn off power and rotate the blower wheel by hand. If seized, free the wheel or replace the fuel pump.
		Seized fuel pump	
		Failed burner motor	Replace the motor.

Troubleshooting: Burner starts, but no flame is established.

Source	Procedure	Causes	Correction
Oil Supply	Check tank gauge or use dip stick.	No oil in tank	Fill tank.
	Coat dip stick with litmus paste and insert into bottom of tank.	Water in oil tank	If water depth exceeds 1 inch, pump or drain water.
	Listen for pump whine.	Tank shut-off valve closed	Open valve.
Oil Filters & Oil Line	Listen for pump whine.	Oil line filter is plugged	Replace filter cartridges.
		Kinks or restriction in oil line	Repair or replace oil line.
		Plugged fuel pump strainer	Clean strainer or replace pump.
	Open bleed valve or gauge port. Start the burner. No oil or milky oil indicates loss or prime.	Air leak in oil supply line	Locate and correct leak.
			Tighten all connections.
Oil Pump	Install pressure gauge on pump and read pressure. Should not be less than 140 psi.	Pump is partially or completely frozen. No pressure and the motor locks out on overload.	Replace pump.
		Coupling disengaged or broken - no pressure	Re-engage or replace coupling.
		Fuel pressure too low	Adjust to 140 psi.
Nozzle	Observe the oil spray (gun assembly must be removed from unit). Inspect the nozzle for plugged orifice or carbon build-up around orifice.	Nozzle orifice plugged	Replace nozzle with the same size, spray angle, and spray pattern.
		Nozzle strainer plugged	
		Poor or off center spray	
Ignition Electrodes	Remove gun assembly and inspect electrodes.	Fouled or shorted electrodes	Clean or replace electrodes.
		Dirty electrodes	
		Eroded electrode tips	Clean electrode tips and use T-501 gauge to reset the gap to 5/32 inches and correctly position tips.
		Improper electrode gap spacing	
		Improper position of electrode tips	
		Bad buss bar connection	Retension and realign.
		Cracked or chipped insulators	Replace electrode.
Ignition Transformer	Start burner and observe spark. Check line voltage to transformer primary.	Low line voltage	Check voltage at power source. Correct cause of voltage drop or call the power company.
		Burned out transformer windings.	Replace the transformer.
		No spark or weak spark	Properly ground the transformer case.
Burner Motor	Motor does not come up to speed and trips out on overload. Turn off power and rotate blower wheel by hand to check for binding or excessive drag.	Low line voltage	Check voltage at power source. Correct cause of voltage drop or the call power company.
		Pump or blower overloading motor	Correct cause of overloading.
		Faulty motor	Replace motor.

Troubleshooting: Burner starts and fires, but lock out on safety.

Source	Procedure		Causes	Correction
Poor Fire	After burner fires, immediately jumper across flame detector terminals at the primary control.	If burner continues to run, this may be due to poor fire. Inspect fire.	Unbalanced fire	Replace nozzle
			Too much air - -lean short fire	Reduce combustion air - check combustion.
			Too little air - - long dirty fire	Increase combustion air - check combustion.
			Excessive draft	Adjust barometric draft control for correct draft.
			Too little draft or restriction	Correct draft or remove restriction.
Flame Detector		If fire is good, fault is in the flame detector. Check detector circuit.	Faulty cad cell (open circuit)	Replace cad cell.
			Loose connections or broken cad cell wires	Secure connections or replace cad cell holder and wire leads.
			Cad cell cannot sense flame	Check cad cell for proper alignment. Check cad cell face and clean, if necessary.
Primary Control		If burner locks out on safety, fault is in the primary control.	Primary control circuit failed	Replace primary control.

Troubleshooting: Burner Starts and Fires, but Loses Flame and Lock Out on Safety

Source	Procedure		Causes	Correction
Poor Fire	After burner fires, immediately jumper across flame detector terminals at the primary control.	If burner continues to run (does not lock out of safety), fault may be due to poor fire. Inspect fire.	Unbalanced fire	Replace nozzle
			Too much air - - lean short fire	Reduce combustion air - check combustion.
			Too little air - - long dirty fire	Increase combustion air - check combustion.
			Excessive draft	Adjust barometric draft control for correct draft.
			Too little draft or restriction	Correct draft or remove restriction.
Flame Detector		If fire is good, fault is in the flame detector. Check detector circuit.	Faulty cad cell (open circuit)	Replace cad cell.
			Loose connections or broken cad cell wires	Secure connections or replace cad cell holder and wire leads.
			Cad cell cannot sense flame	Check cad cell for proper alignment. Check cad cell face and clean, if necessary.
Oil Supply		If burner loses flame (does not lock out on safety), fault is in the fuel system.	Pump loses prime - air slug	Prime pump at bleed port
			Pump loses prime - air leak in supply line	Check supply line for loose connections and tighten fittings.
			Water slug in line	Check oil tank for water (over 1 inch) pump or drain out water.
			Partially plugged nozzle or nozzle strainer	Replace nozzle.
	Listen for pump whine		Restriction in oil line	Clear restriction.
			Plugged fuel pump strainer	Clean strainer or replace pump.
			Cold oil - outdoor tank	Change to number 1 oil.

Troubleshooting: Burner starts and fires, but short cycles (too little heat)

Source	Procedure	Causes	Correction
Thermostat	Check thermostat.	Heat anticipator set too low	Correct heat anticipator setting.
		Vibration at thermostat	Correct source of vibration.
		Thermostat in the path of a warm air draft	Shield thermostat from draft or relocate.
Limit Control	Connect voltmeter between line voltage connections to primary control (black & white leads). If burner cycles due to power interruption, it is cycling on limit.	Dirty furnace air filters	Clean or replace filter.
		Temperature rise too high	Check fo proper nozzle size. Replace nozzle, if necessary. Check for restrictions and remove, if necessary. Check speed tap jumper and make sure it is still in factory position.
		Blower motor seized or burned out	Replace motor.
		Blower wheel dirty	Clean blower wheel.
		Wrong motor rotation	Replace motor.
		Restrictions in return or supply air system	Correct cause of restriction.
Power	If voltage fluctuates, fault is in the power source. Recheck voltage at the power source.	Loose wiring connection	Locate and secure connection.
		Low or fluctuating line voltage	Call power company.

Troubleshooting: Burner runs continuously (too much heat).

Source	Procedure		Causes	Correction
Thermostat	Disconnect thermostat wires at the primary control.	If burner turns off, fault is in the thermostat circuit.	Shorted or welded thermostat contacts	Repair or replace the thermostat.
			Stuck thermostat bimetal	Clear obstruction or replace thermostat.
			Thermostat not level	Level thermostat.
			Shorted thermostat wires	Repair short or replace wires.
			Thermostat out of calibration	Replace thermostat.
			Thermostat in cold draft	Correct draft or relocate the thermostat.
Primary control		If burner does not turn off, fault is in the primary control.	Failed primary control	Replace the primary control.

Troubleshooting: Burner runs continuously (too little heat).

Source	Procedure		Causes	Correction
Combustion	Check burner combustion for CO2, stack temperature, and smoke	Low CO_2 less than 10%.	Too much combustion air	Reduce combustion air.
			Air leaks into heat exchanger around inspection door, etc.	Correct cause of air leak.
			Excessive overfire draft	Adjust barometric draft control for correct draft.
			Incorrect nozzle assembly depth	Set to 1.13.
		High smoke reading more than a trace.	Dirty or plugged heat exchanger	Clean heat exchanger.
				Readjust burner.
			Insufficient overfire draft	Increase draft.
			Incorrect nozzle assembly depth	Set to 1.13.
			Too little combustion air	Increase combustion air.
		High stack temperature is more than 550°F Net.	Low volume indoor blower air	Check pump coupling for wear / slippage.
			Dirty heat exchanger	Clean heat exchanger.
			Dirty burner blower wheel	Clean burner blower wheel.
			Dirty furnace air filters	Clean or replace filter.
			Restricted or closed registers or dampers	Readjust registers or dampers.
Oil Pressure	Inspect fire and check oil pressure.		Partially plugged or bad nozzle	Replace nozzle.
			Oil pressure is too low (less than 140 psi.)	Increase oil pressure to 140 psi.

ELO183DH Start-Up & Performance Check List

Job Name _____ Job No. _____ Date _____

Job Location _____ City _____ State _____

Installer _____ City _____ State _____

Unit Model No. _____ Serial No. _____ Serviceman _____

HEATING SECTION

Electrical Connections Tight? ☐

Supply Voltage _____ Blower Motor Amps _____

Blower Motor H.P. _____

Piping Connections Tight? ☐ All Valves Open? ☐

Flue Connections Tight? ☐ Vent Clear? ☐ Filter Clean & Secure? ☐

Burner Model No. _____ Serial Number _____

Oil Pump Pressure [recommended minimum 140 psi] _____

PROPER DRAFT

Draft Reading (recommended .03-.04 inches w.c.) _____

% CO_2 _____ % O_2 _____ ppm CO _____

Smoke Test _____

Stack Draft _____ Overfire Draft _____

Net Stack Temp _____ Ambient Temp _____

External Static Pressure _____ Temperature Rise _____

THERMOSTAT

Calibrated? ☐ Heat Anticipator Properly Set? ☐ Level? ☐