Linear Servo Actuator
LSA Series
Shaft Type
Operating Manual

LSA-S6
LSA-S8
LSA-S10

First Edition

IAI
Quality and Innovation

IAI America, Inc.

Safety Precautions (Please read before using the product.)

Before installing, operating, maintaining or inspecting this product, please peruse this operating manual as well as the operating manuals and other related documentations for all equipment and peripheral devices connected to this product in order to ensure the correct use of this product and connected equipment/devices. Those performing installation, operation, maintenance and inspection of the product must have sufficient knowledge of the relevant equipment and their safety. The precautions provided below are designed to help you use the product safely and avoid bodily injury and/or property damage.

In this operating manual, safety precautions are classified as “Danger,” “Warning,” “Caution” and “Note,” according to the degree of risk.

Danger	Failure to observe the instruction will result in an imminent danger leading to death or serious injury.
Warning	Failure to observe the instruction may result in death or serious injury.
Caution	Failure to observe the instruction may result in injury or property damage.
Note	The user should take heed of this information to ensure the proper use of the product, although failure to do so will not result in injury.

It should be noted that the instructions under the ⚠ Caution and ⓘ Note headings may also lead to serious consequences, if unheeded, depending on the situation.
All instructions contained herein provide vital information for ensuring safety. Please read the contents carefully and handle the product with due caution.
Please keep this operating manual in a convenient place for quick reference whenever needed, and also make sure that the manual will get to the end-user.

Danger

[General]

- Do not use this product for the following applications:
  1. Medical equipment used to maintain, control or otherwise affect human life or physical health
  2. Mechanisms and machinery designed for the purpose of moving or transporting people
  3. Important safety parts of machinery

  This product has not been planned or designed for applications requiring high levels of safety. Use of this product in such applications may jeopardize the safety of human life. The warranty covers only the product as it is delivered.

[Installation]

- Do not use this product in a place exposed to ignitable, inflammable or explosive substances. The product may ignite, burn or explode.
- When installing the product, be sure to securely support and affix it (including the work). Failure to do so may cause the product to tip over, drop or malfunction, resulting in injury.

- Avoid using the product in a place where the main unit or controller may come in contact with water or oil droplets.
- Never cut and/or reconnect the cables supplied with the product for the purpose of extending or shortening the cable length. Doing so may result in fire.

[Operation]

- Do not enter the machine's range of operation while the product is operating or standing by. The actuator may move suddenly, causing injury.
- If you are using a pace maker or other mechanical implant, do not come within 30 cm of the product. The strong magnetic field generated by the product may cause the pace maker, etc., to malfunction.
- Do not pour water onto the product. Spraying water over the product, washing it with water or using it in water may cause the product to malfunction, resulting in injury, electric shock, fire, etc.

[Maintenance, Inspection, Repair]

- Never modify the product. Unauthorized modification may cause the product to malfunction, resulting in injury, electric shock, fire, etc.
- Do not disassemble and reassemble the components relating to the basic structure of the product or its performance and function. Doing so may result in injury, electric shock, fire, etc.

⚠ Warning

[General]

- Do not use the product outside the specifications. Using the product outside the specifications may cause it to fail, stop functioning or sustain damage. It may also significantly reduce the service life of the product. In particular, observe the maximum loading capacity and speed.

[Installation]

- If the machine will stop in the case of system problem such as emergency stop or power failure, design a safety circuit or other device that will prevent equipment damage or injury.
- Be sure to provide Class D grounding for the controller and actuator (formerly Class 3 grounding: Grounding resistance at 100 Ω or less). Leakage current may cause electric shock or malfunction.
- Before supplying power to and operating the product, always check the operation area of the equipment to ensure safety. Supplying power to the product carelessly may cause electric shock or injury due to contact with the moving parts.
- Wire the product correctly by referring to the operation manual. Securely connect the cables and connectors so that they will not be disconnected or come loose. Failure to do so may cause the product to malfunction or cause fire.

[Operation]

- Before operating the moving parts of the product by hand (for the purpose of manual positioning, etc.), confirm that the servo is turned off (using the teaching pendant). Failure to observe this instruction may result in injury.
- Do not scratch the cables. Scratching, forcibly bending, pulling, winding, crushing with heavy object or pinching a cable may cause it to leak current or lose continuity, resulting in fire, electric shock, malfunction, etc.
- Turn off the power to the product in the event of power failure. Failure to do so may cause the product to suddenly start moving when the power is restored, thus resulting in injury or product damage.
- If the product is generating heat, smoke or a strange smell, turn off the power immediately. Continuing to use the product may result in product damage or fire.
- If noise or abnormally high vibration is detected, stop the operation immediately. Continuing to use the product may result in product damage, malfunction due to damage, runaway machine, etc.

- If any of the internal protective devices (alarms) of the product has actuated, turn off the power immediately. Continuing to use the product may result in product damage or injury due to malfunction. Once the power supply is cut off, investigate and remove the cause and then turn on the power again.
- Do not step on the product, use it as a footstool or place any object on it. You may lose your footing or the product may tip over, resulting in a fall and consequent injury, product damage, malfunction due to damage, runaway machine, etc.

[Maintenance, Inspection, Repair]

- Before conducting maintenance/inspection, parts replacement or other operations on the product, completely shut down the power supply. At this time, take the following measures:
  1. Display a sign that reads, “WORK IN PROGRESS. DO NOT TURN ON POWER” at a conspicuous place, in order to prevent a person other than the operator from accidentally turning on the power while the operation is working.
  2. When two or more operators are to perform maintenance/inspection together, always call out every time the power is turned on/off or an axis is moved in order to ensure safety.

[Disposal]

- Do not throw the product into fire. The product may burst or generate toxic gases.

⚠ Caution

[Installation]

- Do not use the product under direct sunlight (ultraviolet ray), in a place exposed to dust, salt or iron powder, in a humid place, or in an atmosphere of organic solvent, phosphate-ester machine oil, etc. The product may lose its function over a short period of time, or exhibit a sudden drop in performance or its service life may be significantly reduced.
- Do not use the product in an atmosphere of corrosive gases (sulfuric acid or hydrochloric acid). Rust may form and reduce the structural strength of the product.
- When using the product in any of the places specified below, provide a sufficient shield. Failure to do so may result in malfunction:
  1. Place where large current or high magnetic field is present
  2. Place where welding or other operations are performed that cause arc discharge
  3. Place subject to electrostatic noise
  4. Place with potential exposure to radiation
- Do not install the product in a place subject to large vibration or impact (4.9 m/s^2 or more). Doing so may result in the malfunctioning of the product.
- Provide an emergency-stop device in a readily accessible position so the device can be actuated immediately upon occurrence of a dangerous situation during operation. Lack of such device in an appropriate position may result in injury.
- Provide sufficient maintenance space when installing the product. Routine inspection and maintenance cannot be performed without sufficient space, which will eventually cause the equipment to stop or the product to sustain damage.
- When transporting or installing the product, exercise due caution to prevent injury. For example, securely hold the product using a lift or support or engage multiple operators to carry the product.
- Do not hold the moving parts of the product or its cables during installation. It may result in injury.
- Always use IAI’s genuine cables for connection between the controller and the actuator. Also use IAI’s genuine products for the key component units such as the actuator, controller and teaching pendant.
- The brake mechanism is designed to prevent the slider from dropping when the power to the vertical axis is turned off. Do not use it as a safety brake, etc.
- Before installing or adjusting the product or performing other operations on the product, display a sign that reads, “WORK IN PROGRESS. DO NOT TURN ON POWER.” If the power is turned on inadvertently, injury may result due to electric shock or sudden activation of an actuator.

[Operation]

- Turn on the power to individual equipment one by one, starting from the equipment at the highest level in the system hierarchy. Failure to do so may cause the product to start suddenly, resulting in injury or product damage.
- Do not insert a finger or object in the openings in the product. It may cause fire, electric shock or injury.
- Do not bring a floppy disk or other magnetic media within 30 cm of the product. The magnetic field generated by the magnet may destroy the data in the floppy disk, etc.
- Do not step on the product, use it as a footstool or place any object on it. It may cause scoring, dents or deformation of the driving part, resulting in product damage, unintended stopping due to damage, or performance drop.

[Maintenance, Inspection, Repair]

- Wear protective goggles when applying grease to the actuator. Failure to do so may result in eye inflammation due to spattered grease.

Note

[Installation]

- Protection covers or other guards must be provided for the moving parts of the equipment to avoid direct contact with the operators.
- Do not configure a control circuit that will cause the work to drop in case of power failure. Configure a control circuit that will prevent the table or work from dropping when the power to the machine is cut off or an emergency stop is actuated.
- The following conditions must be met in order to improve the straightness of the table movement and ensure the smooth movement of the ball screw and linear guides:
  1. Flatness of the mounting surface must be within 0.05 mm.
  2. The mounting surface area must be large enough to ensure the rigidity of the actuator.

[Installation, Operation, Maintenance]

- When handling the product, wear protective gloves, protective goggles, safety shoes or other necessary gear to ensure safety.

[Maintenance, Inspection, Repair]

- When performing maintenance, apply the specified grease to the guides and ball screw. Pay special attention not to let fluoride grease mix with lithium grease. The machine may be damaged due to poor lubrication, increased resistance, etc.

[Disposal]

- When the product becomes no longer usable or necessary, dispose of it properly as an industrial waste.

Others

- IAI shall not be liable whatsoever for any loss or damage arising from a failure to observe the items specified in “Safety Precautions.”
- If you have any questions regarding the product, please contact your nearest IAI sales office. The addresses and phone numbers of our sales offices are provided at the end of this operation manual.

Table of Contents

1. Foreword 1

2. Safety Precautions 1

2.1 Basic Handling 1
2.2 Maintenance and Inspection 1
2.3 Permanent Magnets 1

3. Warranty 2

3.1 Warranty Period 2
3.2 Scope of Warranty 2

4. Name of Each Part 3

5. Transportation and Handling 4

5.1 Handling the Actuator by Itself 4
5.1.1 Handling the Packed Actuator 4
5.1.2 Handling the Unpacked Actuator 4
5.2 Handling the Actuator Assembly 5
5.2.1 Condition of Shipment from IAI (Assembled) 5
5.2.2 Handling after Assembly with Peripheral Equipment 5

6. Operating and Storage Environment 6

6.1 Operating Environment 6
6.2 Storage Environment 6

7. Installation 7

7.1 Installing the Actuator 8
7.2 Installation Surface 9
7.3 Tightening Screws 10
7.4 Installing a Connector Box Using T-slots 10
7.5 Installing a Load on the Slider 11

8. Wiring of the Cables 12

9. Precautions for Use 13

9.1 Actuator Load 13
9.2 Home Return 15
9.2.1 Operating Principles of Home Return 15
9.2.2 Fine-tuning the Home Position 15
9.2.3 Changing the Home Direction 15
9.3 Stainless Sheet 16

10. Selection Conditions 17
10.1 Selection Method 18
10.2 Example 20
11. Maintenance and Inspection 22
11.1 Inspection Items and Schedule 22
11.2 Visually Inspecting the Exterior 22
11.3 Cleaning the Exterior 22
11.4 Inspecting the Interior 23
11.5 Cleaning the Interior 23
12. Troubleshooting 24
12.1 What to Do When You Suspect a Failure 24
12.2 Encoder Open Error (Error Code: D12) 24
12.3 Driver Overload Error (Error Code: D0A) 25
12.4 Deviation Overflow Error (Error Code: C6B) 26
13. Replacement/Adjustment of Stainless Sheet 27
13.1 Replacement Procedure for Stainless Sheet 28
13.2 Adjusting the Stainless Sheet Tension 29
13.3 Operation Check 31
14. Specifications 33
14.1 Actuator 33
14.2 Cable Wiring Diagram 34
14.3 External Dimension Drawing 35
14.3.1 S6SS 35
14.3.2 S6SM 37
14.3.3 S8SS 39
14.3.4 S8HS 41
14.3.5 S8SM 43
14.3.6 S8HM 45
14.3.7 S10SS 47
14.3.8 S10HS 49
14.3.9 S10SM 51
14.3.10 S10HM 53

1. Foreword

Thank you for purchasing an IAI product.
This operating manual describes the correct handling, structure, maintenance and other aspects of your actuator.
Before using your actuator, be sure to read this operating manual and handle the actuator correctly. Keep this manual with you so that you can reference applicable information whenever necessary.
For more complete information on operating the actuator, also peruse the operating manual for your controller.

2. Safety Precautions

2.1 Basic Handling

- You must assume that any handling or operation not specifically explained in this operating manual or the controller operating manual cannot be performed, and do not perform any such handling or operation.
- Always use IAI's genuine parts for wiring between the actuator and controller.
- Entering the operation range of the machine while the machine is operating or receiving power may create a dangerous situation and must be avoided at all cost.

2.2 Maintenance and Inspection

- Be sure to turn off the controller power before performing maintenance or inspection.
- Exercise due caution so that other operator will not turn on the power inadvertently while inspection is still in progress.
- Put up a plate or other sign that clearly states "WORK IN PROGRESS," etc., in a conspicuous location.
- If two or more operators work together to perform maintenance or inspection, the operators should mutually watch out for each other's safety. Particularly when turning on/off the power or moving the axis, always call out before each action to ensure safety.

2.3 Permanent Magnets

This actuator uses high-performance rare-earth permanent magnets.
Accordingly, the actuator may cause malfunction in medical devices such as pacemakers.
Those who are wearing a pacemaker or any other medical device must not come within 30 cm of the actuator.

(Note)
- The information provided in this manual is subject to change without notice for the purpose of modification and improvement.
- This manual has been written with due attention to accuracy and completeness, but there may still be inaccuracies and omissions. Should you find any error, or if you have any feedback, please contact IAI's Engineering Service Section or Sales Engineering Section.

3. Warranty

3.1 Warranty Period

Warranty period shall be either of the following periods whichever ends first:

- **18 months after shipment from our factory**
- **12 months after delivery to a specified location**
- **2500 hours of operation time**

3.2 Scope of Warranty

If a breakdown occurs within the period specified above and is due to the manufacturer's error, we will repair the unit at no cost. However, the following items are not covered by this warranty.

- Faded paint or other changes that occur naturally over time.
- Consumable components that wear out with use.
- Unit seems to be noisy or similar impressions that do not affect machinery performance.
- Damage resulting from improper handling by the user or lack of proper maintenance.
- Any alterations made by other than IAI or its representatives.
- Breakdowns caused by using controllers made by other manufacturers.
- Any damages caused by fire and other natural disasters or accidents.

The warranty pertains to the purchased product itself and does not cover any damages that might arise from a breakdown of the supplied product.
Any repairs will be done at our factory. Even if the product is still covered under the warranty period, we will assess a separate charge for sending technicians to the customer's site.

4. Name of Each Part

The name of each part of the actuator is specified below.

In this manual, the right-left directions of the actuator are indicated by viewing the actuator from its top and also from its home side, with the actuator placed horizontally. “Front” refers to the side opposite to one on which the actuator home is located.

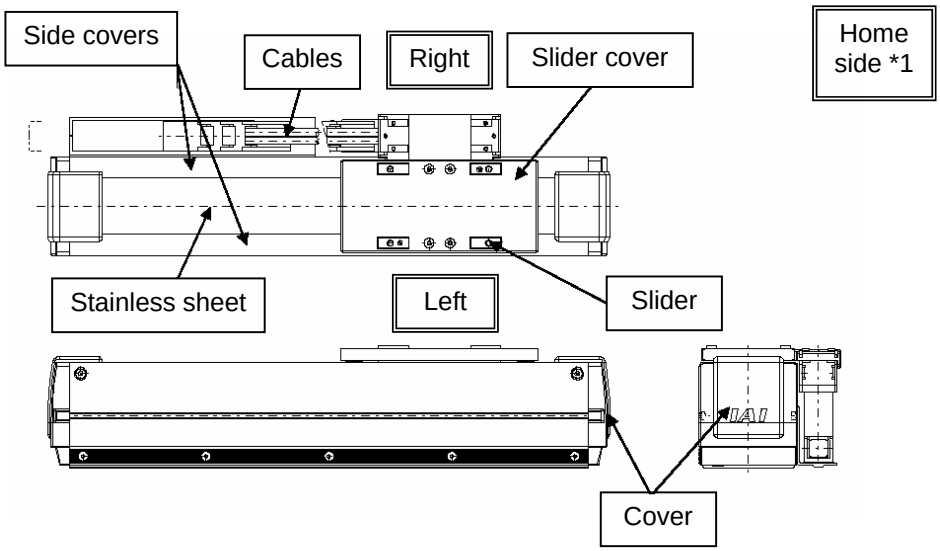

*1 In the above figure, the cables are facing top, while the home is located on the right side.
The actuator is shipped with its home adjusted to the side specified by the customer. Accordingly, the home position on your actuator may be different from the direction shown in the figure.

5. Transportation and Handling

5.1 Handling the Actuator by Itself

When transporting the actuator by itself, take note of the items specified below.

5.1.1 Handling the Packed Actuator

Unless otherwise specified, the actuator of single-axis configuration is packed individually.
When transporting or handling the packed actuator, exercise due caution not to hit the package against other object or drop the package.

- If the package is heavy, the operator must not attempt to carry the package alone.
- When setting down the package, place it horizontally.
- Do not step onto the package.
- Do not place on the package any heavy object or other article with an area of concentrated mass that may cause the package to deform.

5.1.2 Handling the Unpacked Actuator

When handling the unpacked actuator, hold it by the base.

⚠ Warning

- Do not apply excessive force on any part of the actuator. In particular, avoid transporting the actuator by holding its cables, cable bearer or slider.
- This actuator uses high-performance rare-earth permanent magnets. Therefore, those who are wearing a pacemaker or any other medical device must not come within 30 cm of the actuator.
- Handling precaution for the stainless sheet
  The stainless sheet has a thickness of only 0.1 mm or so in order to provide flexibility. Because of this very thin design, the stainless sheet easily gets dented and scratched. If the damaged stainless sheet is used continuously, the sheet may eventually break.

- Taboos in transportation



Do not transport the actuator by holding its slider.



Do not transport the actuator by holding its guide rail.



Do not transport the actuator by holding its cable bearer.



Do not transport the actuator by holding its stainless sheet.

5.2 Handling the Actuator Assembly

Pay attention to the following instructions when transporting an assembly of actuator axes.

5.2.1 Condition of Shipment from IAI (Assembled)

The actuators you have ordered are assembled at IAI, after which the assembly receives a shipping inspection and is shipped in an outer frame with skids.

The assembly is packed with the sliders securely affixed so that they will not move unexpectedly during transportation. In the case of a combined unit, the actuator ends are secured to prevent swinging due to external vibration.

- The package is not designed with special considerations for protection against impact due to dropping or collision, so please handle the package with care. Also, do not place any heavy object on the outer frame, as it is not strong enough to withstand loads.
- When suspending the package using ropes, etc., pass the ropes from underneath the reinforcement frames at the bottom of the skids. When lifting with a forklift, also place the forks underneath the skids.
- Set down the package carefully so as not to apply impact to the assembly or cause it to bounce.

◆ After unpacking, handle the actuator assembly correctly by observing the instructions given below.

5.2.2 Handling after Assembly with Peripheral Equipment

When transporting the actuators that have been assembled with peripheral equipment either at IAI or on your site, observe the instructions given below.

- Secure each slider to prevent unexpected movement during transportation.
- If any actuator end is protruding, secure it to prevent swinging due to external vibration.
- If the actuator ends are not secured, do not apply any impact force exceeding 0.3 G during transportation.
- When suspending the actuator-assembled peripheral equipment using ropes, etc., make sure the ropes do not contact the actuators directly.
- Pass the ropes over appropriate cushion materials, and make sure the loads from the ropes will be received by the base of each actuator.
- Secure the end of the Y-axis using a separate rope to maintain the axis in a stable horizontal position. At this time, be careful not to apply loads on the screw cover.
- Be careful not to allow the brackets, covers and connector box of each actuator to receive loads. Also protect the cables from pinching or excessive deformation.

6. Operating and Storage Environment

6.1 Operating Environment

The actuator should be set up in an environment, which meets the following criteria:

- Avoid direct sunlight.
- Avoid radiant heat from strong heat sources such as a furnace.
- Ambient temperature should be 0 ~ 40°C.
- The humidity should be less than 85% and there should be no condensation.
- Avoid exposure to corrosive or combustible gases.
- The area should have very little dust and be suitable for normal assembly operations.
- Avoid exposure to oil mist or fluids used in cutting.
- The unit should not be subject to vibrations greater than 0.3 G.
- Avoid extreme electromagnetic waves, ultraviolet rays and radiation.
- This product is not intended to be used in a chemical environment.

In general, the environment should be one in which an operator can work without protective gear.

6.2 Storage Environment

The storage environment should be similar to the operating environment. In addition, you must take precautions against condensation if the unit is to be stored for a long period of time. Unless there are special instructions, we do not include moisture absorption agents when shipping the unit. If you are storing the unit where condensation might occur, then you must treat the entire package or treat the unit itself after it is unpacked to prevent condensation. The unit can withstand up to 60°C during a short storage interval but only up to 50°C if the storage period is longer than one month.

7. Installation

Notes on Installation

The stainless sheet is designed very thin (thickness: 0.1 mm) in order to ensure flexibility. Therefore, the stainless sheet is easily dented or scratched. Once dented or scratched, the stainless sheet may break during use.

When installing the stainless sheet, pay attention to the following points:

Do not press the sheet directly with hands.



Do not generate powder dust or iron powder around the stainless sheet.
If dust/powder has generated, thoroughly remove attached dust/powder from the stainless sheet after the operation.
If the actuator is operated with the stainless sheet carrying foreign particles, the particles may enter the slider and damage the sheet or cause the sheet to deform, lift or present other problems.
Also, magnets are attached to the side covers to keep the stainless sheet in position. Since these magnets attract metal debris, iron powder and other metal objects, due attention must be paid to the surrounding environment.

7.1 Installing the Actuator

Install the actuator on a machined surface or other flat surface of equivalent accuracy.

This linear actuator has tapped mounting holes that can be used to affix the actuator from its back (take note that the tap size is different depending on the model).
There are also reamed holes for accepting positioning pins.

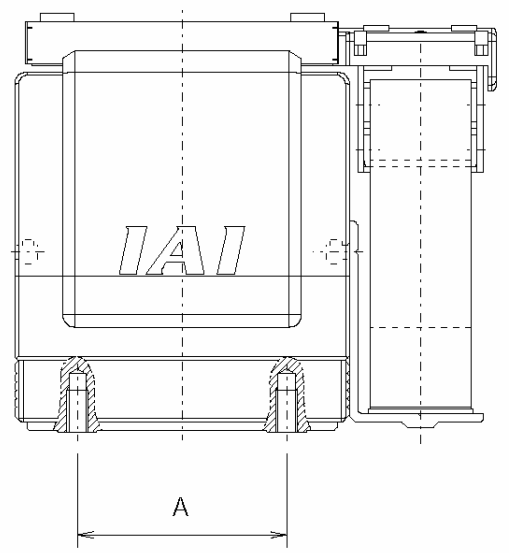

Model	Tap size and depth	Pitch (A)
S	M4, depth 10	30
M/MH	M5 depth 10	50
L/LH	M5 depth 10	70

* Note:	Tapped holes are not through, so pay attention to the bolt length when selecting bolts. Use of bolts of inappropriate length may damage the tapped holes or reduce the mounting strength of the actuator, consequently leading to lower accuracy or unexpected accident.

7.2 Installation Surface

- Ensure that the frame offers sufficient structural rigidity to prevent generation of vibration.
- Install the actuator on a machined surface or other flat surface of equivalent accuracy. The flatness of the installation surface must be 0.05 mm/m or less.
- Provide sufficient space to allow for maintenance work.
- The side and bottom surfaces of the actuator base provide reference surfaces used for alignment of slider travel.
- If you require higher traveling accuracy, install the actuator using these reference surfaces.

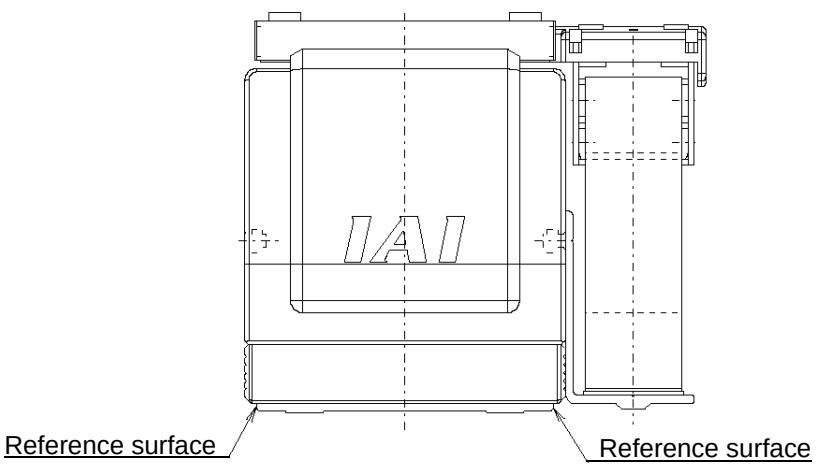

* Note:	As shown above, each side surface of the base provides a reference surface used for alignment of slider travel. If you require higher traveling accuracy, therefore, install the actuator with reference to either side surface of the base.

When installing the actuator on the frame using the base reference surfaces, provide the necessary machining by following the drawing below.

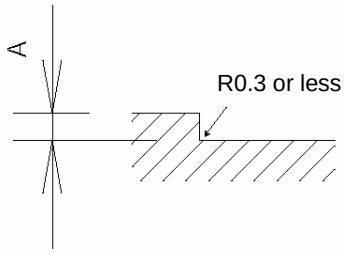

Model	Dimension A (mm)
S, M, /MH	1.5 ~ 2 or less
L/LH	1.5 ~ 3 or less

7.3 Tightening Screws

- Use hexagonal socket head bolts (male screws) for installing the base.
- Use of high-tensile bolts of ISO strength category 10.9 or above is recommended.
- Provide the following effective engagement length for the bolt and male screw.

When the male screw is made of steel → Same as the nominal diameter
When the male screw is made of aluminum → Twice the nominal diameter

- The recommended tightening torques are as follows.

Model	Nominal screw diameter	Tightening torque	
		Steel bolt bearing surface	Aluminum bolt bearing surface
S	M4	3.95 N·m (0.37 kgf·m)	1.76 N·m (0.18 kgf·m)
M/MH L/LH	M5	7.27 N·m (0.74 kgf·m)	3.42 N·m (0.35 kgf·m)

7.4 Installing a Connector Box Using T-slots

T-slots (M3) are provided on the side faces of the actuator for installation of a connector box or other external equipment.
If you are using a wiring kit, install a connector box using these T-slots.
T-slots can also be used for other purposes, such as installing sensors or securing cables.
The T-slot dimensions are specified below.

- Use of square nuts is recommended in T-slots, but hex nuts can also be used.
- When installing an object using T-slots, select bolts of an appropriate length so that the tip of the bolt will not contact the bottom of the T-slot.

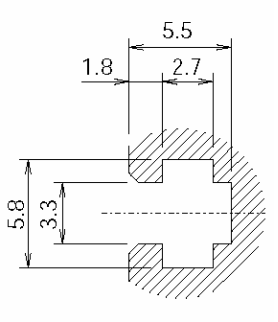

7.5 Installing a Load on the Slider

- The slider has tapped holes that can be used to affix a load.
- The procedure to affix a load on the slider shall conform to the actuator installation procedure.
- Two reamed holes are provided in the slider. Use these holes if the load must be installed/removed repeatedly. To fine-tune the squareness, etc., use one of these reamed holes in the slider.
- Refer to the table below for the screw-in depths and reamed depths.

* Note: Do not screw in the bolts to a length exceeding the applicable value specified in the table below, as it will damage the side cover or other part of the actuator.

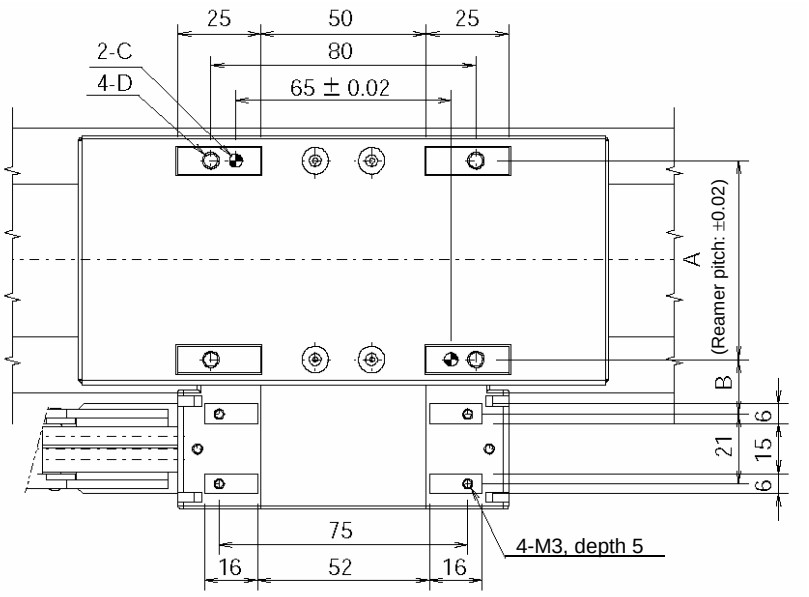

Model	A	B	C	D
S	45	14	ϕ 4H7, depth 8	M4, depth 10
M/MH	60	16.5	ϕ 4H7, depth 8	M5, depth 10
L/LH	80	16.5	ϕ 6H7, depth 10	M6, depth 10

8. Wiring of the Cables

- Do not cut any of the cables to reduce its length or reconnect the cut cable with other cable to extend the wiring length or for any other purpose.
- Do not pull the cables or bend them excessively.

- Controller connection diagram
  This is a connection example with the XSEL controller. This actuator can also be connected to the SSEL or SCON controller.

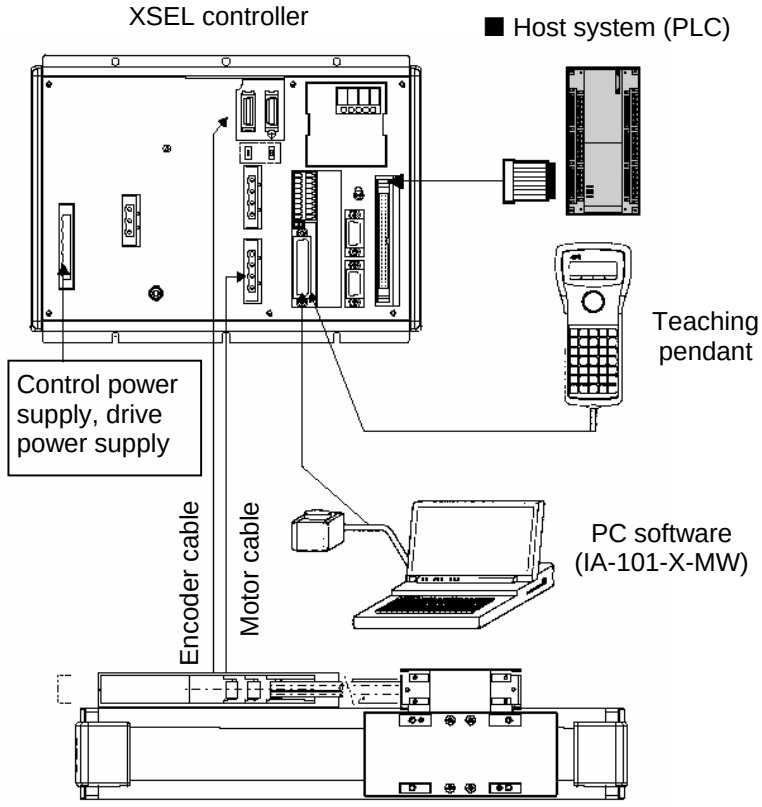

9. Precautions for Use

9.1 Actuator Load

Make sure the load specified in the “Specifications” section is not exceeded. In particular, pay attention to the moment applied to the slider, allowable overhang length, and load.

• Allowable load moment

Allowable load moments　　Unit：N･m (kgf･m)

	Ma	Mb	Mc
S6SS,S6SM	28.9 (2.95)	41.2 (4.2)	22.5 (2.3)
S8SS,S8SM S8HS,S8HM	42.2 (4.3)	60.3 (6.15)	37.6 (3.84)
S10SS,S10SM S10HS,S10HM	57.4 (5.85)	81.9 (8.35)	60.8 (6.2)

• Allowable overhang length

All models　Ma, Mb, Mc　300 mm or less

* The above overhang length assumes that the center of gravity of the load is located at a point corresponding to one-half the overhang length.

Moment directions

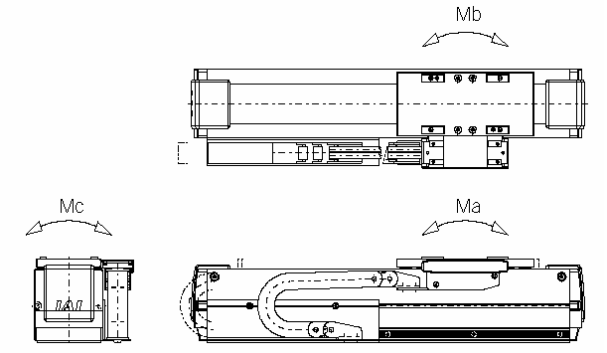

Allowable overhang directions

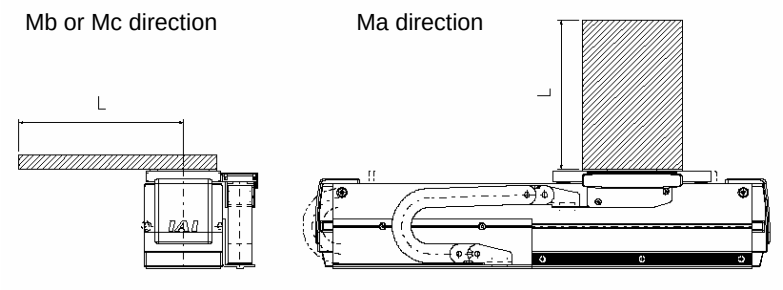

* Note:	If an excessive load moment is applied, the guide will reach its life prematurely or other undesirable effects will result. Using the actuator in a configuration where the overhang length exceeds the allowable value may also increase vibration or reduce the service life of the guide.

Notes on Moment Calculation

The allowable load moments in the table are calculated based on the guide.
The shaft-type linear actuator has the top surface of its slider located above the guide. Because of this structure, moments should be calculated by taking into consideration the height from the guide to the top surface of the slider, as shown below.

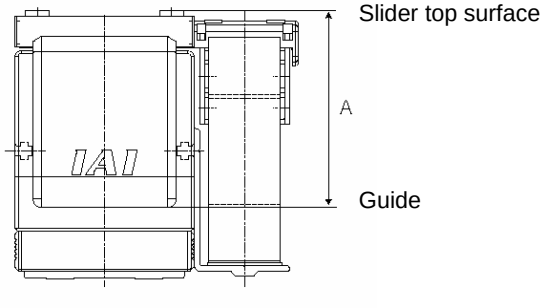

Dimension A	
S6SS、SM	: 69mm
S8SS、SM、HS、HM	: 79mm
S10SS、SM、HS、HM	: 99mm

9.2 Home Return

9.2.1 Operating Principles of Home Return

Home return is performed in the sequence specified below.

[1] When a home return command is issued, the moving direction is determined from the specified parameter.
[2] During home return, the mechanical end is detected via the software.
[3] The actuator reverses upon contacting the mechanical end, after which it detects a Z phase signal and recognizes this position as the reference point.
[4] The actuator moves further by the offset specified by the applicable parameter and recognizes the achieved position as the home.

9.2.2 Fine-tuning the Home Position

The actuator is shipped with its motor travel after the actuator contacts the stopper until a Z phase signal is output pre-adjusted. The table below lists the standard reversing distance for each model, where the reversing distance indicates the distance moved by the slider after it contacts the stopper and reverses, until it stops at the home position.

Model	Reversing distance from mechanical stopper
S6SS, S6SM	Approx. 5 mm
S8SS, S8SM S8HS, S8HM	
S10SS, S10SM S10HS, S10HM	

If the home return direction remains the same, changing the parameter based on this value allows you to fine-tune the home position of your actuator. Perform this fine-tuning by following the procedure below.

[1] Perform home return to check the home.
[2] Thereafter, move the actuator to a desired home. Check the difference and correct the parameter accordingly. The parameter accepts a positive value to set an offset in the moving direction of the actuator. (Negative values cannot be set.)
[3] Increasing the offset reduces the moving range by the amount incremented. If you have specified an offset exceeding 1 mm, also adjust the soft limits.

9.2.3 Changing the Home Direction

Changing the factory-set home direction after the delivery requires the moving direction parameter to be changed and the encoder readjusted. Please consult IAI.

> ⚠ Warning
>
> The encoder not only detects position and home signals, but it also plays an important role in the switching of AC-servo power phases. Since the AC-servo power phases have been adjusted precisely, never touch the encoder to change the home.

9.3 Stainless Sheet

The stainless sheet is held in position by the attraction forces of rubber magnets provided on the side covers. If ambient air contains a lot of magnetic substances such as iron powder, these magnetic substances may be attracted to the rubber magnets and enter the space between the stainless sheet and magnets, thereby causing problems. Therefore, avoid using the actuator in an environment where the actuator will come in contact with a high level of magnetic substances.

- If viscous substances such as adhesives and paints attach to the stainless sheet, slider malfunction or sheet damage may occur. Prevent viscous substances from contacting the actuator.

- Take note that applying a force only to a specific part of the stainless sheet may cause the affected part to deform and create various problems. Also, do not grip or hold the stainless sheet when installing or transporting the actuator, as it may damage the sheet.

Do not press the sheet directly with hands.



10. Selection Conditions

When selecting a desired model of shaft-type linear servo actuator, you must ensure that the selected actuator satisfies the following two conditions.

- The thrust required for acceleration must not exceed the maximum thrust of the shaft-type linear servo actuator.
- The thrust during continuous operation must not exceed the rated thrust of the shaft-type linear servo actuator.

The above conditions are explained by using a trapezoid operation as an example.

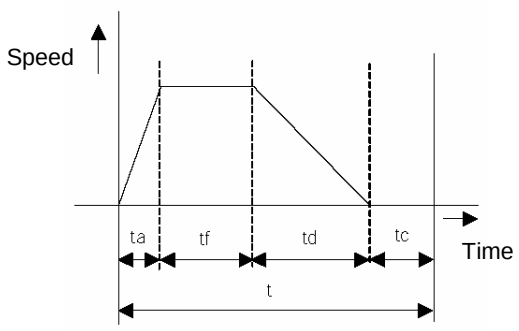

t: Operation time per cycle (sec)
ta: Acceleration time (sec)
tf: Moving time at constant speed (sec)
td: Deceleration time (sec)
tc: Stabilization time

The above operation pattern can be expressed differently in a graph where the vertical axis represents thrust.

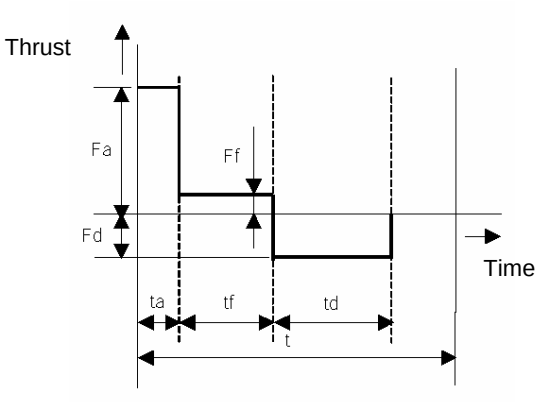

Fa: Thrust required for acceleration (N)
Ff: Traveling resistance (N)
Fd: Thrust required for deceleration (N)

10.1 Selection Method

Condition [1]: Maximum thrust

For the slider to accelerate according to a command, the thrust required for acceleration, or Fa, must be smaller than the maximum thrust of the shaft-type linear servo actuator.

$$Fa = (M+m)\,a + Ff$$

Here,
M: Slider weight
m: Slider payload (kg)
a: Commanded acceleration (m/s^2)* *1G = 9.8 m/s^2
Ff: Traveling resistance (N)

[Slider weight]	
S6SS,S6SM	: 1.4kg
S8SS,S8SM	: 1.7kg
S8HS,S8HM	: 2.0kg
S10SS,S10SM	: 3.5kg
S10HS,S10HM	: 4.0kg

In the case of a shaft-type linear servo actuator, the traveling resistance is determined by the speed and empirically calculated as specified below.

[Traveling resistance of shaft-type linear servo actuator]
The table below lists the traveling resistance of each model of shaft-type linear servo actuator.

	Traveling resistance Ff (N)
S6SS,S6SM	5V+5
S8SS,S8SM	9V+7
S8HS,S8HM	9V+7
S10SS,S10SM	20V+13.5
S10HS,S10HM	20V+13.5

* V: Slider speed (m/s)
(Achieved speed is used in a triangle wave operation.)

If the obtained Fa is smaller than the maximum thrust of the shaft-type linear servo actuator, condition 1 is satisfied.

	Maximum thrust (N)
S6SS,S6SM	60
S8SS,S8SM	100
S8HS,S8HM	140
S10SS,S10SM	260
S10HS,S10HM	320

Condition [2]: Thrust during continuous operation

Confirm that the thrust during continuous operation, or Ft, which also takes into consideration the load and duty, is smaller than the rated thrust of the shaft-type linear servo actuator.

$$F_t = \sqrt{\frac{F_a^2 \cdot t_a + F_f^2 \cdot t_f + F_d^2 \cdot t_d}{t}}$$

Fa: Thrust required for acceleration (N)
ta: Acceleration time (sec)
td: Deceleration time (sec)
Ff: Traveling resistance (N)
tf: Moving time at constant speed (sec)
t: Operation time per cycle (sec) (t = ta + tf + td + tc)

[Stabilization time tc]

S6SS,S6SM	: 0.15 sec
S8SS,S8SM	: 0.2 sec
S8HS,S8HM	: 0.2 sec
S10SS,S10SM	: 0.2 sec
S10HS,S10HM	: 0.2 sec

Here, Fd indicates the thrust required for deceleration and can be calculated as follows:

Fd= (M+m) ·d−Ff

M: Slider weight
m: Slider payload (kg)
d: Commanded deceleration (m/s^2)
Ff: Traveling resistance (N)

If the obtained thrust during continuous operation Ft is smaller than the rated thrust, the actuator can be operated in the applicable conditions.

	Rated thrust (N)
S6SS,S6SM	15
S8SS,S8SM	25
S8HS,S8HM	35
S10SS,S10SM	65
S10HS,S10HM	80

The actuator can be used in any operating conditions that satisfy both conditions 1 and 2 specified above. If either condition cannot be satisfied, take appropriate measures such as reducing the slider load, acceleration or duty.

Example

Let's select an actuator by following the procedure in "Selection Method."

★ Operating conditions

- Applicable model: S8SS/S8SM type
- Speed: 2.0 m/s
- Acceleration: 24.5 m/s^2 (The deceleration is assumed to be the same.)
- Travel: 1.5 m
- Slider payload: 2 kg
- The actuator moves back and forth over a stroke of 1.5 m.

＊1G＝9.8m/s^2

The above operation pattern can be illustrated by the graph shown to the right.

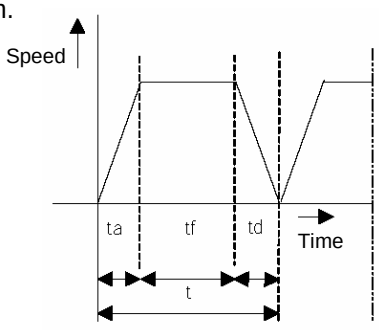

Now, let's start calculation according to "Selection Method."

Test condition [1], "maximum thrust."
Apply the above operation pattern to the aforementioned equation of maximum thrust.

$$Fa = (M+m) \cdot a + Ff$$

Here,

M:	Slider weight	(1.7 kg for the shaft-type linear servo actuator S8SS/S8SM)
m:	Slider load (kg)	: 2 kg in this example
a:	Commanded acceleration (m/s^2)	: 24.5 m/s^2 in this example
Ff:	Traveling resistance (N)	: 25 N in this example

From above, Fa is calculated as follows:
Fa = (3.7 x 24.5 + 25) → 115.74 N

The calculated value exceeds the maximum thrust 100 N of the shaft-type linear servo actuator S8SS/S8SM.

Let's lower the specified acceleration to 19.6 m/s^2. Fa changes as follows:
Fa = (3.7 x 19.6 + 25) → 97.59 N.

The calculated value is smaller than the maximum thrust 100 N of the shaft-type linear servo actuator S8SS/S8SM.

Test condition [2], “thrust during continuous operation.”
Apply the above operation pattern to the aforementioned equation of thrust during continuous operation.
Based on the examination result of maximum thrust, the specified acceleration is assumed as 19.6 m/s^2.

$$F_t = \sqrt{\frac{F_a^{\,2} \cdot t_a + F_f^{\,2} \cdot t_f + F_d^{\,2} \cdot t_d}{t}}$$

Here,
Fa = 97.59 N, Ff = 25 N, Fd = 47.59 N, ta = td = 0.10 sec, tf = 0.65 sec, t = 1.05 sec (including stabilization time tc of 0.2 sec)

From the above, Ft is calculated as 30.23 N.

Since this value exceeds the rated thrust 30 N of the shaft-type linear servo actuator S8SS/S8SM, this actuator cannot be used in the aforementioned operation pattern.

Let’s lower the duty and see what happens.
Repeat the above calculation based on t = 1.7 sec (including stabilization time tc of 0.2 sec).

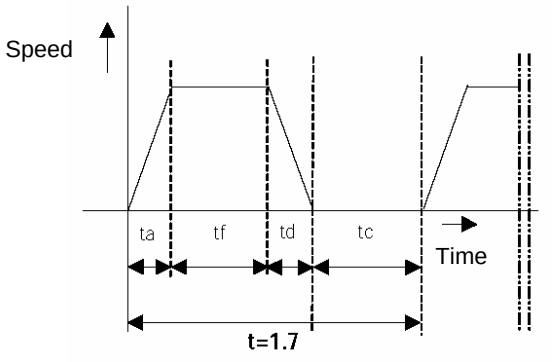

This time, Ft is calculated as 24.32 N.
Accordingly, the actuator can be used in this operation pattern.

11. Maintenance and Inspection

11.1 Inspection Items and Schedule

Perform maintenance and inspection at the intervals specified below.
This schedule assumes that the actuator is operated eight hours a day.
If the actuator is operated at a higher utilization, such as when the machine is used continuously day and night, reduce the inspection intervals accordingly.

	Visual inspection of exterior	Inspection of interior
Start-up inspection	○	
After 1 month of operation	○	
After 6 months of operation	○	○
After 1 year of operation	○	○
Every 6 months thereafter	○	
Every 1 year	○	○

11.2 Visually Inspecting the Exterior

Visually check the exterior of the following items.

Inspection location	Check items	Remarks
Actuator	Loosening of actuator mounting bolts, etc.	
Cables	Scratches, connector engagement	
Stainless sheet	Scratches, loosening	Refer to Chapter 13 in this manual.
Overall	Noise, vibration	

* As a guideline, the service life of the stainless sheet roughly corresponds to a traveled distance of 5,000 km.
  However, the stainless sheet may have to be replaced earlier depending on the use condition.
  To replace the sheet, you must either bring in the actuator to IAI or have IAI's service personnel visit your site to perform replacement, as a rule.

11.3 Cleaning the Exterior

- Clean the exterior surface as necessary.
- Wipe dirty areas using a soft cloth, etc.
- Do not blow highly compressed air onto the actuator, as it may cause dust to enter the actuator through gaps between parts.
- Do not use petroleum-based solvent as it damages resin and coated surfaces.
- To remove stubborn stains, take neutral detergent or alcohol into a soft cloth, etc., and wipe the area gently.

11.4 Inspecting the Interior

With the power supply turned off, turn up the stainless sheet and visually inspect the interior.
Check the following items inside the actuator.

Inspection location	Check items	Remarks
Actuator	Loosening of actuator mounting bolts, etc.	
Guide	Lubrication condition, soiling	If any abnormality is found, contact IAI.

Visually check the interior condition. Focus on entry of dust and other foreign matters and the lubrication condition.
Even if grease has turned brown, the actuator is lubricated properly if its traveling surface is glossy.
If grease has become dirty due to entry of dust and no longer looks glossy, or if the amount of grease has decreased over a long period of use, clean the respective parts and then add grease.
The procedure to check the interior is specified below:

[1] Move the slider toward the home side.
[2] Remove the covers.
[3] Remove the screws securing the sheet using a hex wrench with a width across flats of 2.5 mm.
[4] Turn up the sheet and check the interior.
[5] After the check, assemble the parts by following the same steps in the reverse order.

* Note: When checking the interior, do not forcibly bend or scratch the stainless sheet.
Do not pull the sheet, either, as it may change the initial installation condition.
If the installation condition changes, the sheet may become offset or reach its life prematurely. If you have noticed any negative effect as a result of improper handling of the sheet, please contact IAI's Sales Engineering Section.
When working with the stainless sheet, wear gloves or take other appropriate precautions to prevent cuts by the edges of the sheet.

11.5 Cleaning the Interior

- Wipe dirty areas using a soft cloth, etc.
- Do not blow highly compressed air onto the actuator, as it may cause dust to enter the actuator through gaps between parts.
- Do not use petroleum-based solvent, neutral detergent or alcohol.

12. Troubleshooting

12.1 What to Do When You Suspect a Failure

If the actuator has experienced an encoder open error, driver overload error, deviation overflow error or any other error, check the procedures explained below before concluding that the robot or controller is faulty. If the problem persists after the applicable measures have been taken, contact IAI with the detailed condition.

12.2 Encoder Open Error (Error Code: D12)

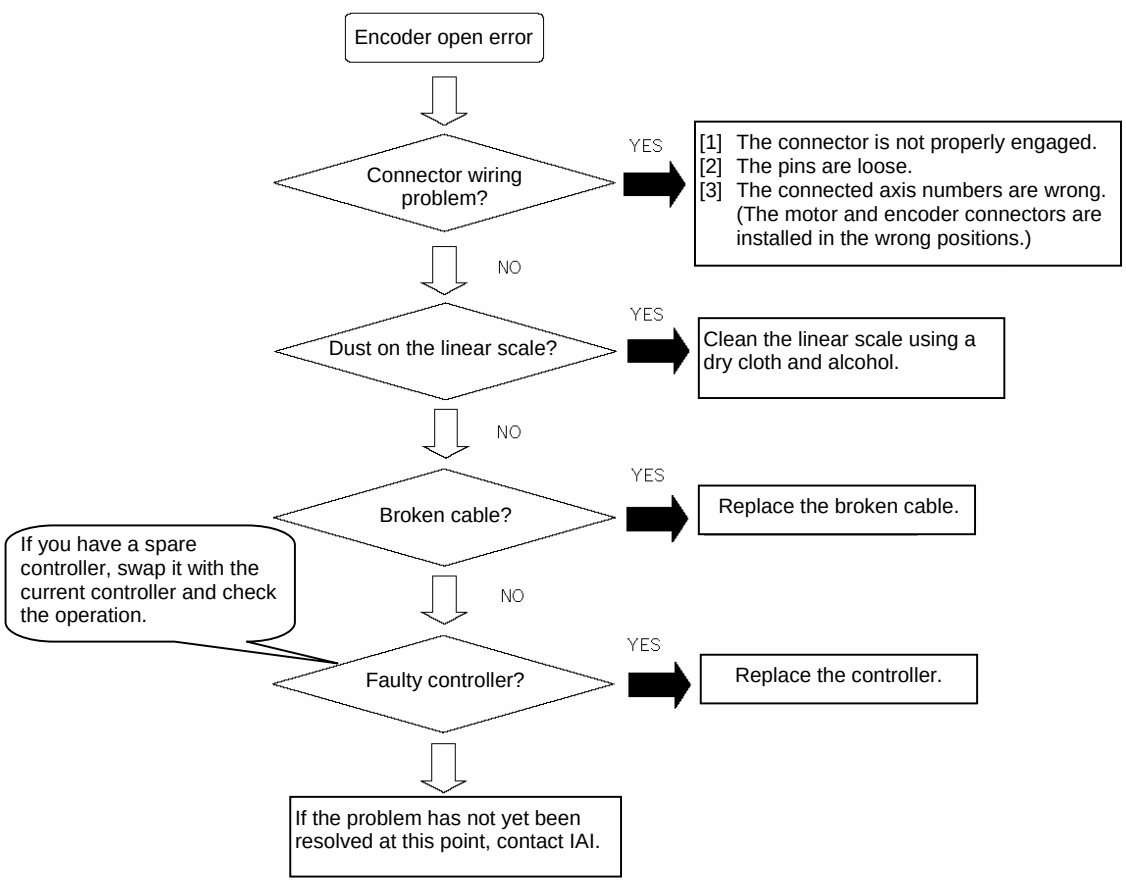

12.3 Driver Overload Error (Error Code: D0A)

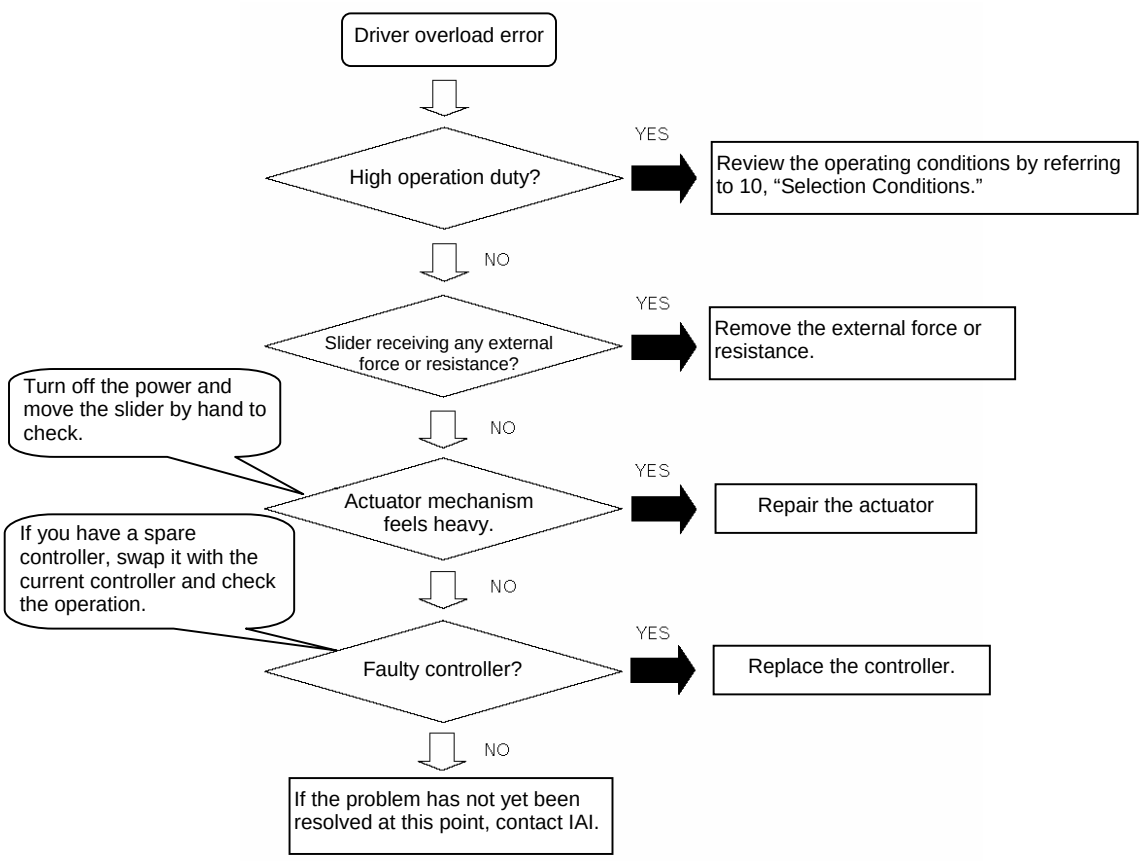

12.4 Deviation Overflow Error (Error Code: C6B)

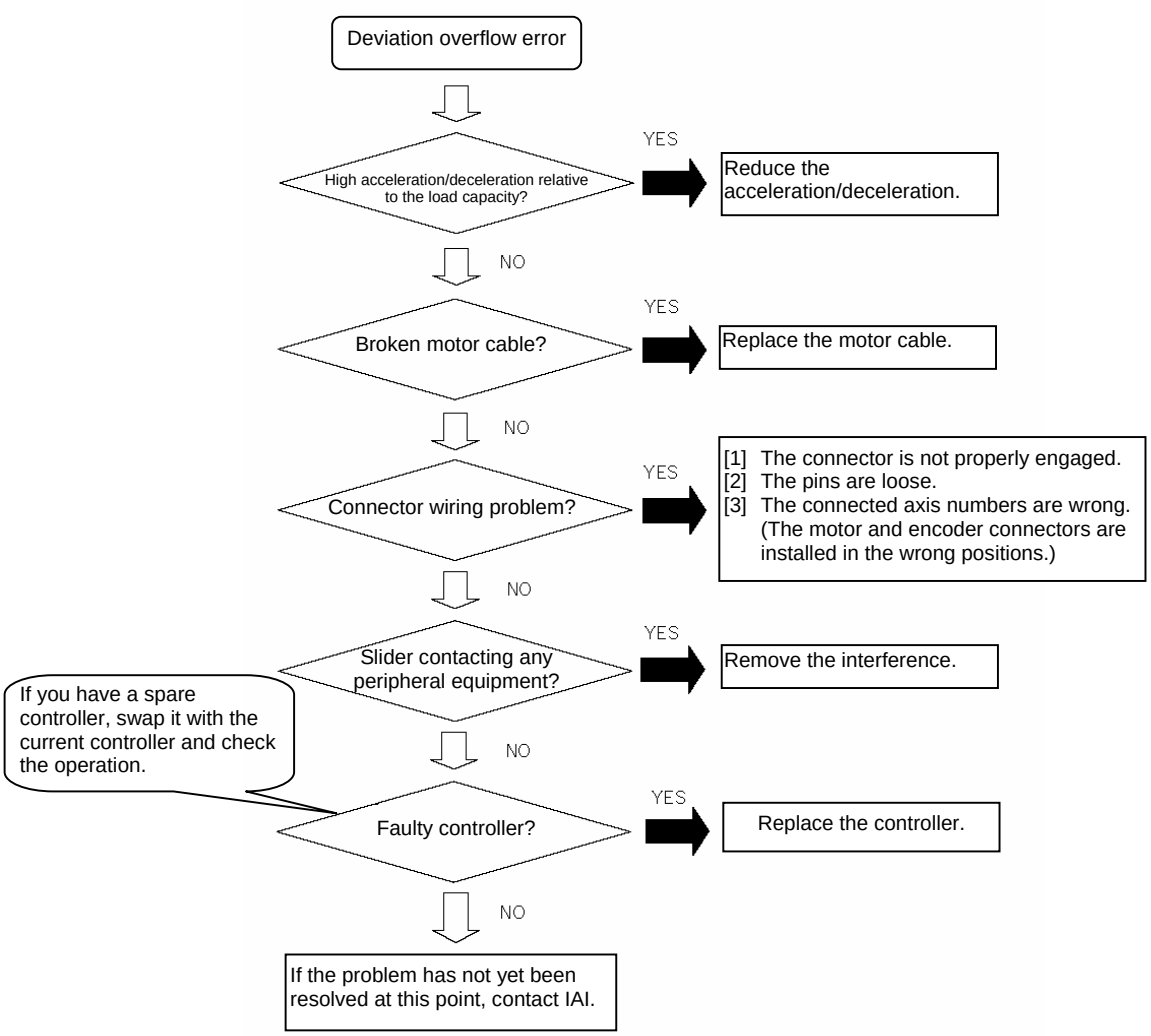

13. Replacement/Adjustment of Stainless Sheet

[Required Items]
- Replacement stainless sheet
- Hex wrench set
- Scale
- Adhesive tape
- Oil-based marker
- Tension gauge (having two forked hooks)

[Notes]
1. Stainless sheet tension
   Improper tension of the stainless sheet can promote deterioration and wear of the sheet.

   If the stainless sheet is too taut and the clearance from the slider cover becomes exceeds 1 mm, the stainless sheet may undergo fatigue failure.

   On the other hand, excessive slacks cause the stainless sheet to contact the back of the slider cover.

2. Checking the clearance between the stainless sheet and the back of the slider cover
   The stainless sheet is replaced without removing the slider cover.
   Therefore, the clearance between the stainless sheet and the back of the slider cover cannot be measured or checked directly.
   The stainless sheet must be tensioned so that this clearance becomes 1 mm.

[Name of each part]
The figure below shows the actuator with its right and left covers removed to expose the stainless-sheet retainer plates.

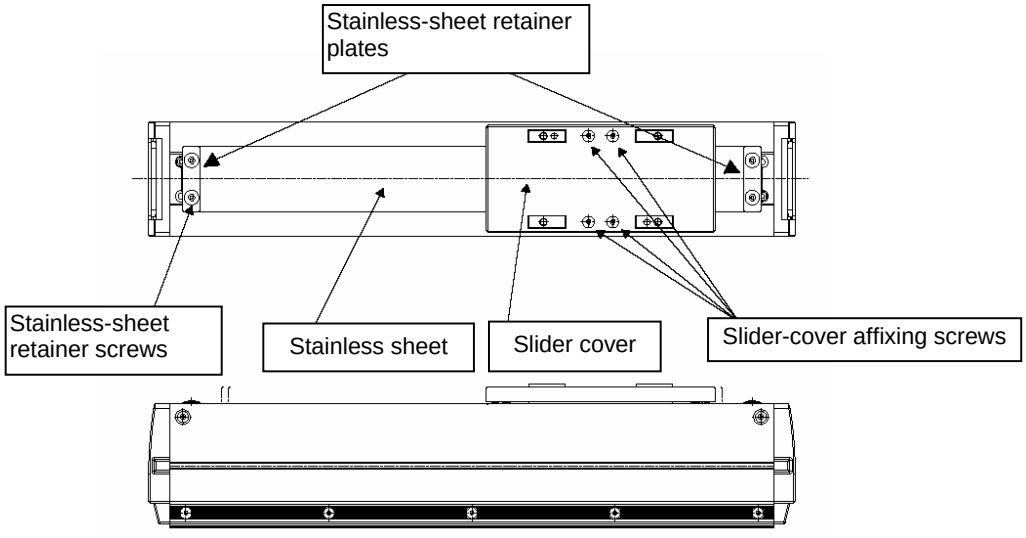

13.1 Replacement Procedure for Stainless Sheet

1. Replacing the damaged stainless sheet with a new stainless sheet
   [1] Remove the right and left covers. To remove each cover, hold both ends and pull out the cover slowly.

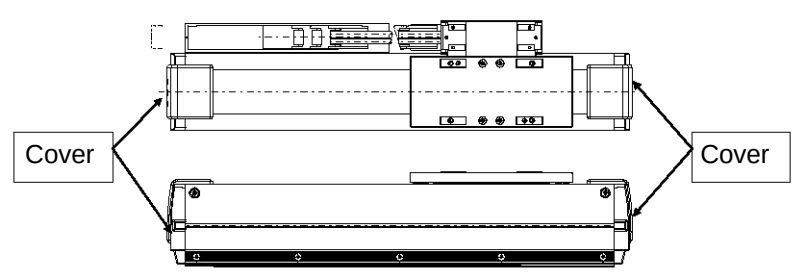

   [2] Check the damaged stainless sheet to confirm absence of scratches or soiling.
   [3] Loosen the screws affixing the damaged stainless sheet and remove the sheet retainer plates.
   [4] Connect the damaged stainless sheet and new stainless sheet using adhesive tape.
   [5] Slowly pull out the damaged stainless sheet.
   [6] Confirm that the new stainless sheet has been installed in the slider.

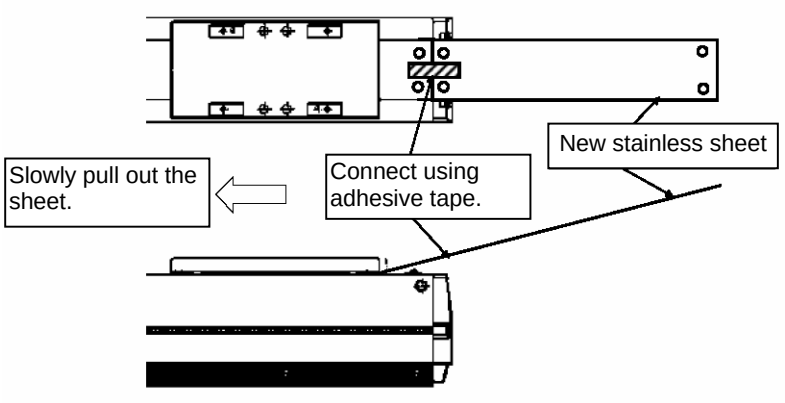

Connect the damaged stainless sheet and new stainless sheet using adhesive tape, and then slowly pull out the damaged stainless sheet so that the new sheet takes its position.

13.2 Adjusting the Stainless Sheet Tension

[1] First, affix the stainless sheet uniformly on the right and left in a manner free from meandering. (The stainless sheet is held in position by the attraction forces of magnets. Therefore, lift the sheet from one end and then put it back in place toward the same end to achieve better result. Also adjust the stainless sheet from the slider center toward both ends.)

[2] Move the slider to a position near the stroke center, and remove the stainless-sheet affixing screws and retainer plate on the front (counter-motor) side.

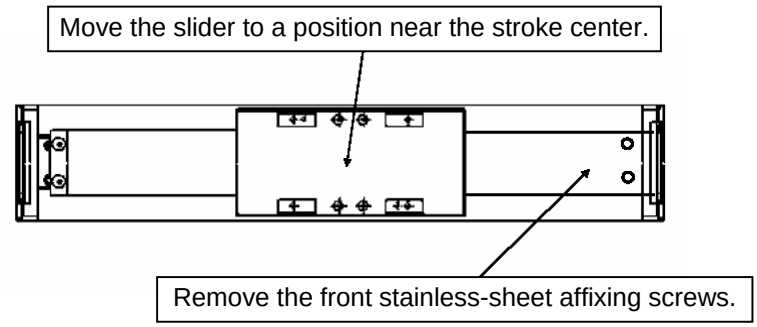

[3] Prepare for tension adjustment of the stainless sheet.

- As shown below, raise the stainless sheet by 1 to 2 cm at the end where the screws were removed in step [2], and then by using a tension gauge, pull the sheet in the direction of the free end with a force of 1 kg. (Use a tension gauge having two forked hooks at its tips and hook the gauge at two locations on the stainless sheet.)
- With the stainless sheet tensioned by a force of 2 kg, allow the stainless sheet to be attracted to the magnets from the slider end toward the other end, and then remove the tension gauge. (Once attracted to the magnets, the stainless sheet will not move.)
- Use an oil-based marker and ruler to draw a straight check line that crosses over the side covers and stainless sheet. (Refer to the figure below.)

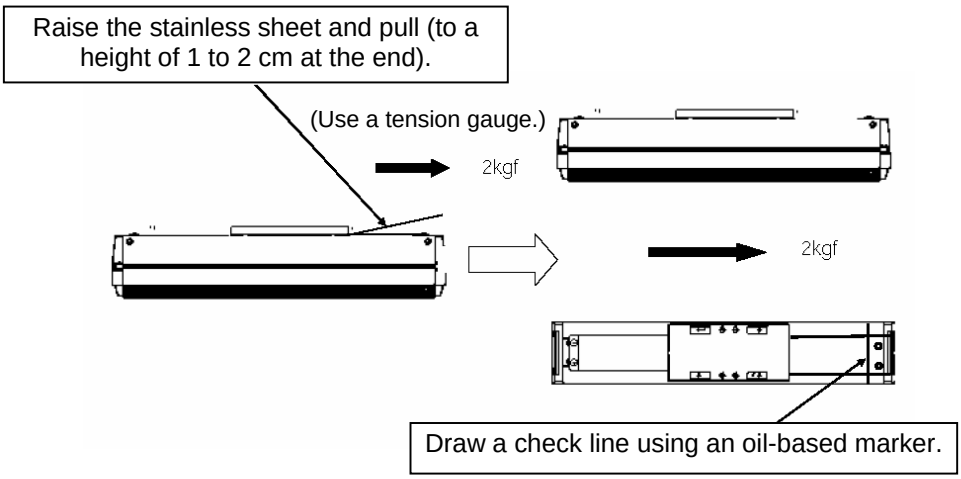

[4] Adjust the tension of the stainless sheet.

Adjust the stainless sheet in the direction of the arrow until the check lines on the side covers are offset from the check line on the stainless sheet by 0.5 mm. (Refer to the enlarged view of A.) (The stainless sheet is held in position by the attraction forces of magnets. Therefore, lift the sheet from one end and then put it back in place toward the same end to achieve better result.)

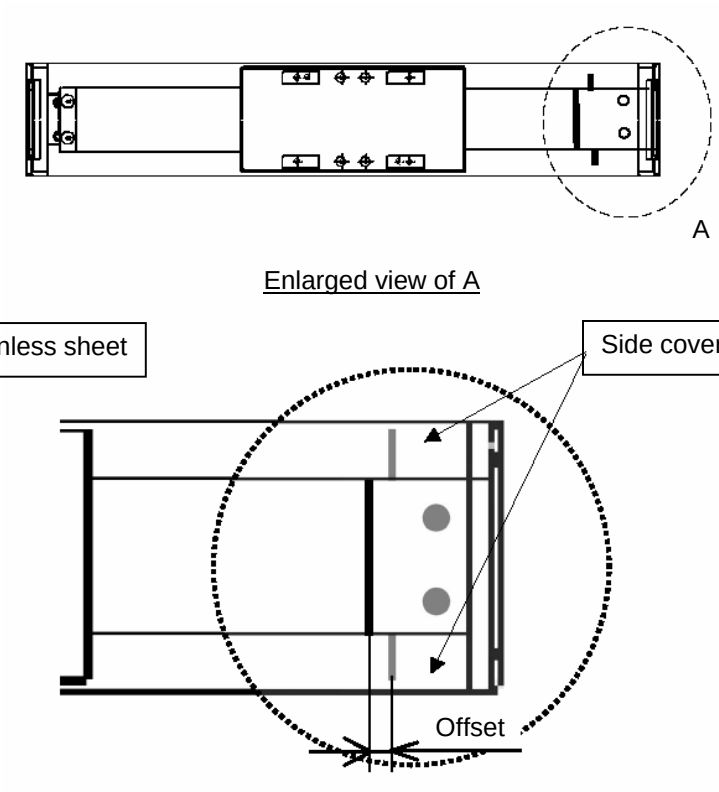

Move the stainless sheet in the direction of the arrow to fine-tune the sheet position until the check lines on the side covers are offset from the check line on the stainless sheet by 0.5 mm.

Once this adjustment is complete, an appropriate clearance has been achieved between the top surface of the stainless sheet and the back of the slider cover at the center of the slider cover.

[5] After the sheet has been positioned, loosely tighten the thin-head screws removed earlier until the stainless sheet no longer moves.

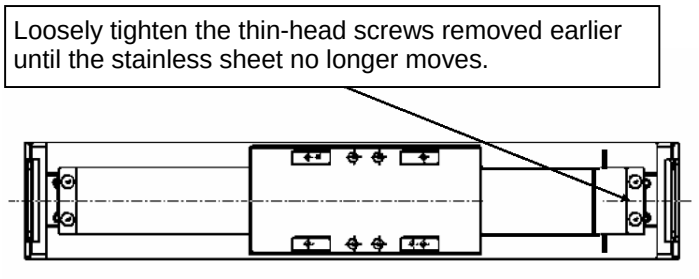

13.3 Operation Check

[1] Move the slider to check the tension of the stainless sheet.
Move the slider to check the tension. Specifically, check if the stainless sheet is positioned uniformly on the right and left without presenting meandering or waving over the entire stroke range.

If the stainless sheet is not uniformly positioned on the right and left or is waving, repeat the adjustment.

[2] Securely tighten the thin-head screws that have been tightened loosely, to affix the stainless sheet in position.

Tightening torque for thin-head screws (reference value)
359 N・cm (36.7 kgf・cm)

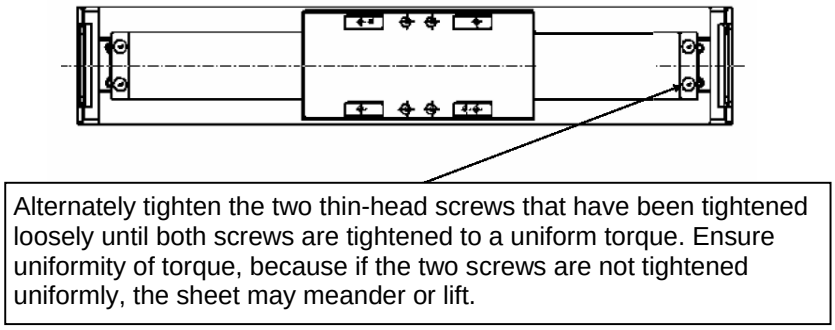

Move the slider to check once again if the stainless sheet is tensioned properly. Lastly, remove the check lines using alcohol, etc.

[3] Install the right and left covers. To install each cover, hold the right and left sides and push in the cover.

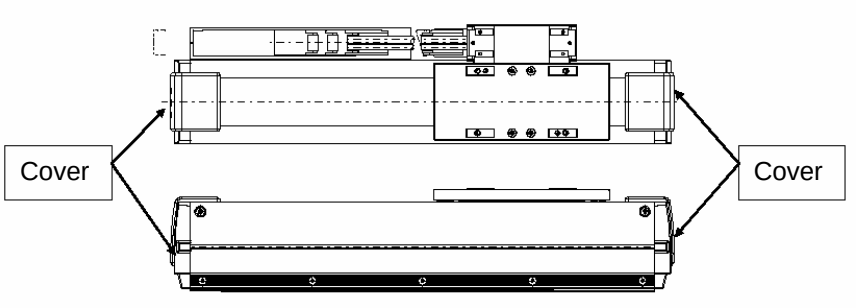

14. Specifications

14.1 Actuator

Item	Unit	LSA-S6SS	LSA-S6SM	LSA-S8SS	LSA-S8SM	LSA-S8HS	LSA-S8HM	LSA-S10SS	LSA-S10SM	LSA-S10HS	LSA-S10HM	
Stroke	mm	48 ~ 1,248 (in increments of 48)	40 ~ 1,048 (in increments of 48)	60 ~ 1,620 (in increments of 60)	60 ~ 1,440 (in increments of 60)	60 ~ 1,620 (in increments of 60)	60 ~ 1,380 (in increments of 60)	90 ~ 2,070 (in increments of 90)	60 ~ 1,860 (in increments of 90)	90 ~ 2,070 (in increments of 90)	105 ~ 1,815 (in increments of 90)	
Rated output	W	38		63		88		163		200		(*1)
Rated thrust	N	15		25		35		65		80		
Maximum load capacity	kg	3		5		7		15		20		(*3)
Load moment	N·m (kgf·m)	Ma: 28.9 (2.95)		Ma: 42.2 (4.3)				Ma: 57.4 (5.85)				
		Mb: 41.2 (4.2)		Mb: 60.3 (6.15)				Mb: 81.9 (8.35)				
		Mc: 22.5 (2.3)		Mc: 37.6 (3.8)				Mc: 60.8 (6.2)				
		Traveling life: 10,000 km										
Maximum speed	mm/sec	2,500										(*2)
Maximum acceleration/ deceleration	G	3										(*3)
Home return accuracy	± mm	0.01										
Positioning repeatability	± mm	0.005										
Lost motion	mm	0.02										
Overhang load length	mm	Ma direction: 300 or less Mb, Mc direction: 300 or less										

(*1) Calculated based on the rated thrust and maximum speed.
(*2) The maximum speed may not be reached depending on the stroke.
(*3) The specific value varies depending on the operating conditions.

14.2 Cable Wiring Diagram

[1] Cable in the cable bearer (motor cable)

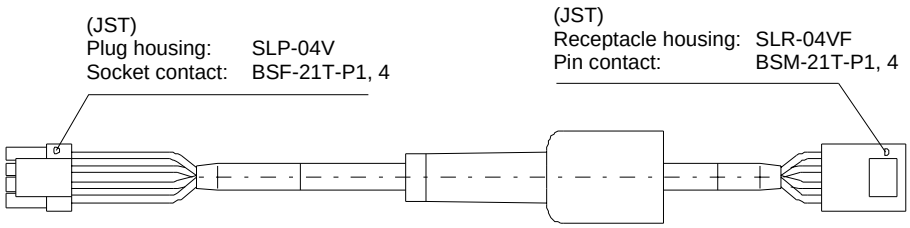

(Yoshinogawa Electric Wire & Cable Co., Ltd.)
RFV-A050C04 AWG 20 x 4 cores
ϕ 5.7

Wire	Color	Signal	No.		No.	Signal	Color	Wire
AWG 20 or equivalent	Red	U	1		1	U	Red	AWG 20 or equivalent
	White	V	2		2	V	White	
	Black	W	3		3	W	Black	
	Green	PE	4		4	PE	Green	

[2] Cable in the cable bearer (encoder cable)

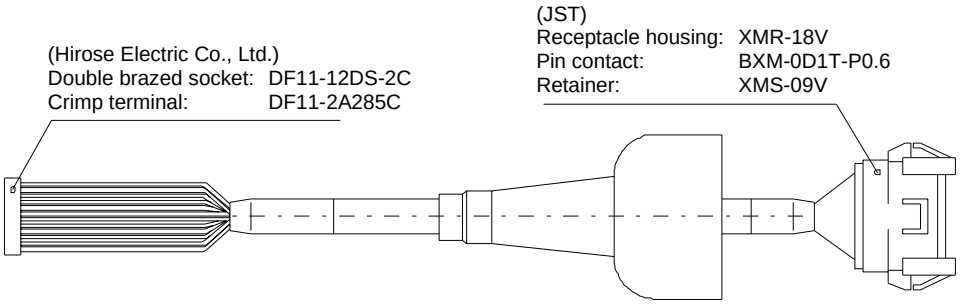

(Taiyo Electric Wire & Cable Co., Ltd.)
EXT-2-SB/2D276 5P x AWG26
External diameter: ϕ 7.2

Wire	Color	Signal	No.		No.	Signal	Color	Wire
AWG 26 or equivalent	1B/Light blue	EN_A	1		1	EN_A	1B/Light blue	AWG 26 or equivalent
	1R/Light blue	EN_/A	2		2	EN_/A	1R/Light blue	
	1B/Pink	EN_B	3		3	EN_B	1B/Pink	
	1R/Pink	EN_/B	4		4	EN_/B	1R/Pink	
	1B/Light green	EN_Z	5		5	EN_Z	1B/Light green	
	1R/Light green	EN_/Z	6		6	EN_/Z	1R/Light green	
	1B/Orange	SD	7		7	NC	-	
	1R/Orange	/SD	8		8	NC	-	
	1B/Gray	5V	9		9	FG	Shield	
	-	NC	10		10	SD	1B/Orange	
	1R/Gray	GND	11		11	/SD	1R/Orange	
	Shield	FG	12		12	NC	-	
					13	NC	-	
					14	5V	1B/Gray	
					15	GND	1R/Gray	
					16	NC	-	
					17	NC	-	
					18	NC	-	

14.3 External Dimension Drawing

14.3.1 S6SS

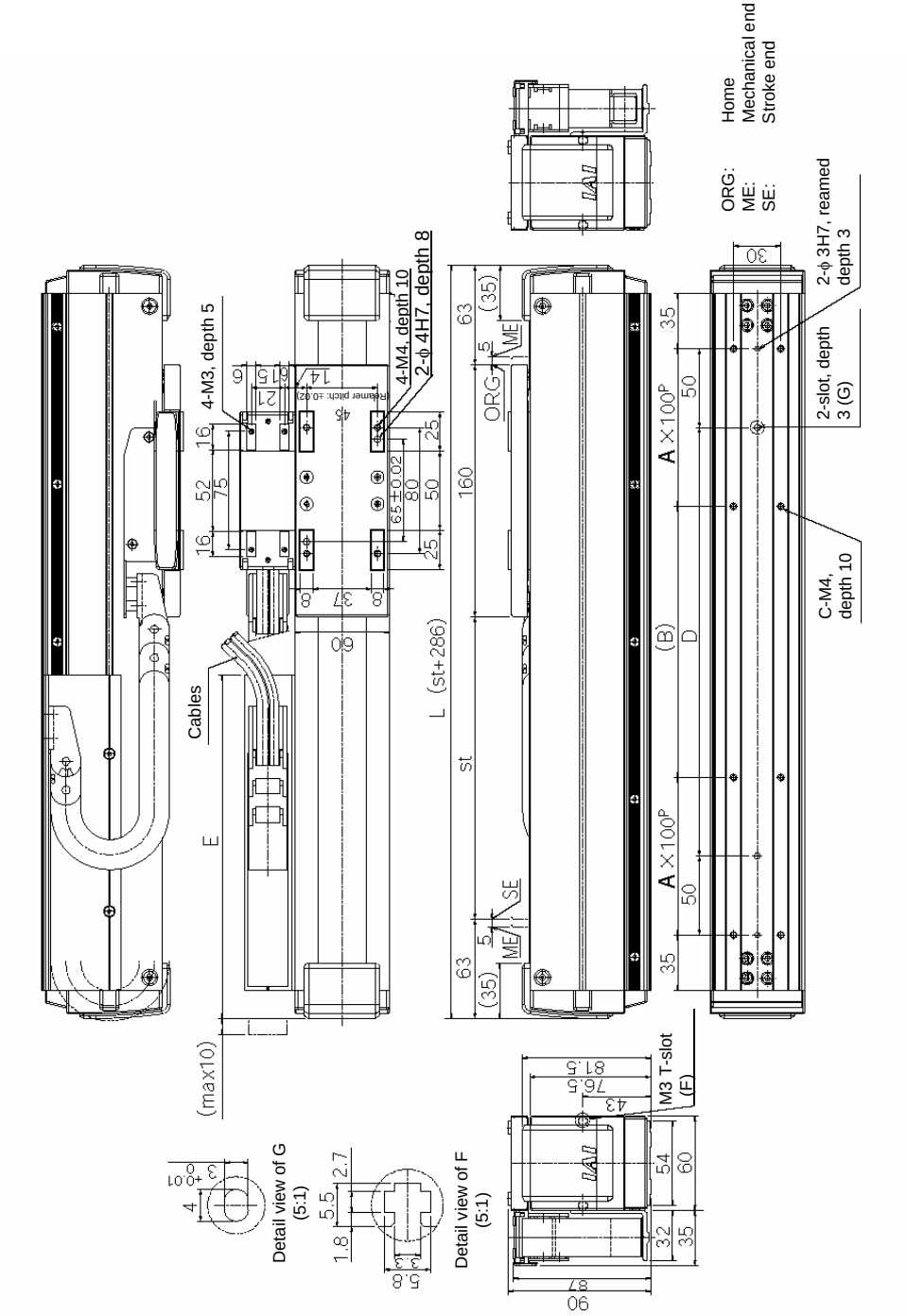

S6SS

No.	st	L	A	B	C	D	E
1	48	334	1	28	8	128	143
2	96	382	1	76	8	176	168
3	144	430	1	124	8	224	193
4	192	478	1	172	8	272	218
5	240	526	2	20	12	320	243
6	288	574	2	68	12	368	268
7	336	622	2	116	12	416	293
8	384	670	2	164	12	464	318
9	432	718	3	12	16	512	343
10	480	766	3	60	16	560	368
11	528	814	3	108	16	608	393
12	576	862	3	156	16	656	418
13	624	910	3	204	16	704	443
14	672	958	4	52	20	752	468
15	720	1006	4	100	20	800	493
16	768	1054	4	148	20	848	518
17	816	1102	4	196	20	896	543
18	864	1150	5	44	24	944	568
19	912	1198	5	92	24	992	593
20	960	1246	5	140	24	1040	618
21	1008	1294	5	188	24	1088	643
22	1056	1342	6	36	28	1136	668
23	1104	1390	6	84	28	1184	693
24	1152	1438	6	132	28	1232	718
25	1200	1486	6	180	28	1280	743
26	1248	1534	7	28	32	1328	768

14.3.2 S6SM

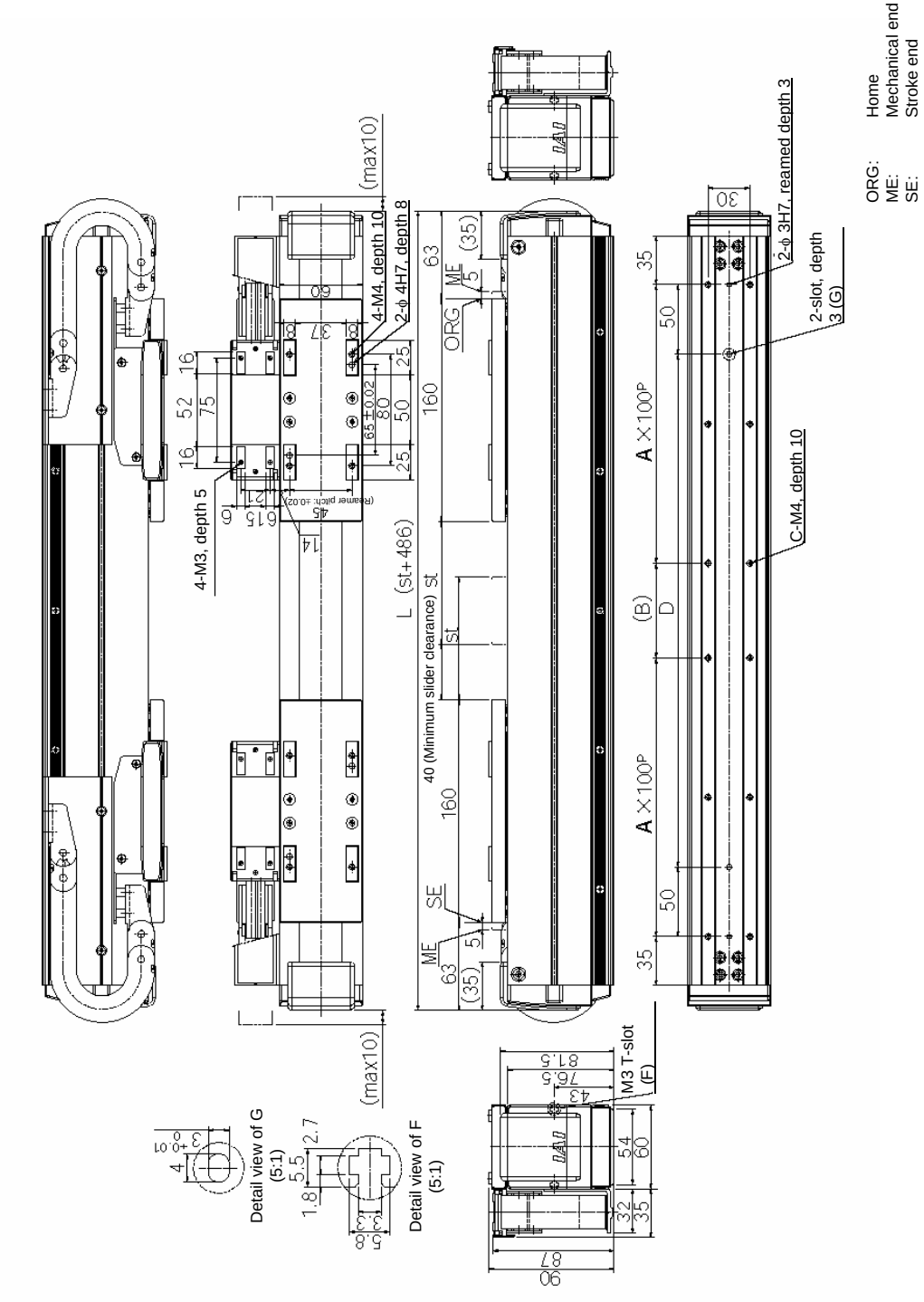
ORG: Home
ME: Mechanical end
SE: Stroke end
4-M3, depth 5
4-M4, depth 10
2-φ 4H7, depth 8
2-φ 3H7, reamed depth 3
2-slot, depth 3 (G)
C-M4, depth 10
M3 T-slot (F)
40 (Minimum slider clearance)
L (st+486)
A ×100P
(B)
D
(max10)
Detail view of G (5:1)
Detail view of F (5:1)

S6SM

No.	st	L	A	B	C	D
1	40	526	2	20	12	320
2	88	574	2	68	12	368
3	136	622	2	116	12	416
4	184	670	2	164	12	464
5	232	718	3	12	16	512
6	280	766	3	60	16	560
7	328	814	3	108	16	608
8	376	862	3	156	16	656
9	424	910	3	204	16	704
10	472	958	4	52	20	752
11	520	1006	4	100	20	800
12	568	1054	4	148	20	848
13	616	1102	4	196	20	896
14	664	1150	5	44	24	944
15	712	1198	5	92	24	992
16	760	1246	5	140	24	1040
17	808	1294	5	188	24	1088
18	856	1342	6	36	28	1136
19	904	1390	6	84	28	1184
20	952	1438	6	132	28	1232
21	1000	1486	6	180	28	1280
22	1048	1534	7	28	32	1328

14.3.3 S8SS

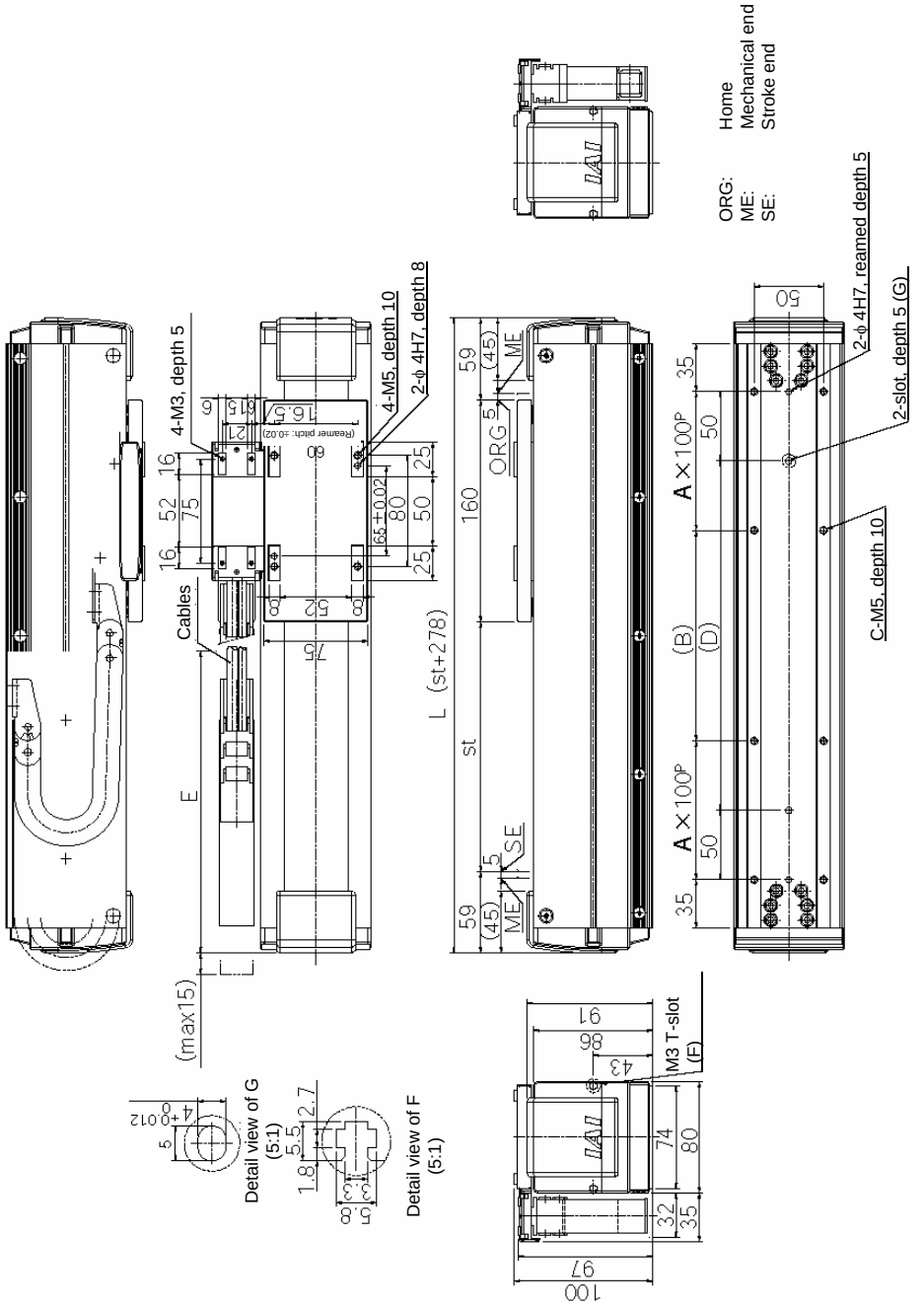
ORG: Home
ME: Mechanical end
SE: Stroke end
4-M3, depth 5
4-M5, depth 10
2-ϕ 4H7, depth 8
2-ϕ 4H7, reamed depth 5
2-slot, depth 5 (G)
C-M5, depth 10
Cables
L (st+278)
st
(max15)
Detail view of G (5:1)
Detail view of F (5:1)
M3 T-slot (F)
A×100P
(B)
(D)

S8SS

No.	st	L	A	B	C	D	E
1	60	338	1	32	8	132	168
2	120	398	1	92	8	192	193
3	180	458	1	152	8	252	218
4	240	518	2	12	12	312	243
5	300	578	2	72	12	372	268
6	360	638	2	132	12	432	293
7	420	698	2	192	12	492	318
8	480	758	3	52	16	552	343
9	540	818	3	112	16	612	393
10	600	878	3	172	16	672	418
11	660	938	4	32	20	732	443
12	720	998	4	92	20	792	468
13	780	1058	4	152	20	852	493
14	840	1118	5	12	24	912	543
15	900	1178	5	72	24	972	568
16	960	1238	5	132	24	1032	593
17	1020	1298	5	192	24	1092	618
18	1080	1358	6	52	28	1152	643
19	1140	1418	6	112	28	1212	693
20	1200	1478	6	172	28	1272	718
21	1260	1538	7	32	32	1332	743
22	1320	1598	7	92	32	1392	768
23	1380	1658	7	152	32	1452	793
24	1440	1718	8	12	36	1512	843
25	1500	1778	8	72	36	1572	868
26	1560	1838	8	132	36	1632	893
27	1620	1898	8	192	36	1692	918

14.3.4 S8HS

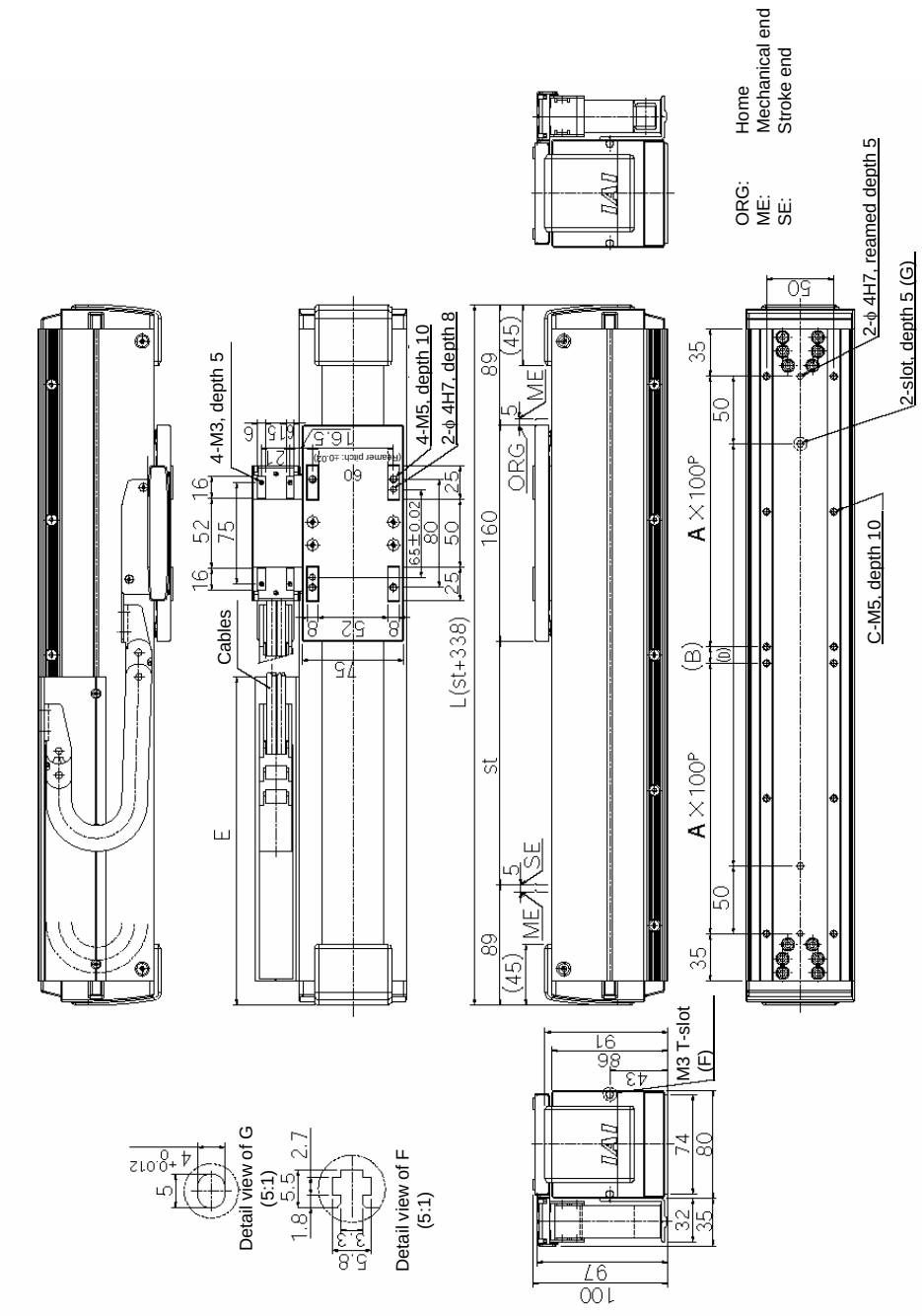
ORG: Home
ME: Mechanical end
SE: Stroke end
2-φ 4H7, reamed depth 5
2-slot, depth 5 (G)
C-M5, depth 10
4-M3, depth 5
4-M5, depth 10
2-φ 4H7, depth 8
Cables
L(st+338)
st
A×100P
(B)
M3 T-slot
(F)
Detail view of G
(5:1)
Detail view of F
(5:1)

S8HS

No.	st	L	A	B	C	D	E
1	60	398	1	92	8	192	193
2	120	458	1	152	8	252	218
3	180	518	2	12	12	312	243
4	240	578	2	72	12	372	268
5	300	638	2	132	12	432	293
6	360	698	2	192	12	492	318
7	420	758	3	52	16	552	343
8	480	818	3	112	16	612	393
9	540	878	3	172	16	672	418
10	600	938	4	32	20	732	443
11	660	998	4	92	20	792	468
12	720	1058	4	152	20	852	493
13	780	1118	5	12	24	912	543
14	840	1178	5	72	24	972	568
15	900	1238	5	132	24	1032	593
16	960	1298	5	192	24	1092	618
17	1020	1358	6	52	28	1152	643
18	1080	1418	6	112	28	1212	693
19	1140	1478	6	172	28	1272	718
20	1200	1538	7	32	32	1332	743
21	1260	1598	7	92	32	1392	768
22	1320	1658	7	152	32	1452	793
23	1380	1718	8	12	36	1512	843
24	1440	1778	8	72	36	1572	868
25	1500	1838	8	132	36	1632	893
26	1560	1898	8	192	36	1692	918
27	1620	1958	9	52	40	1752	943

14.3.5 S8SM

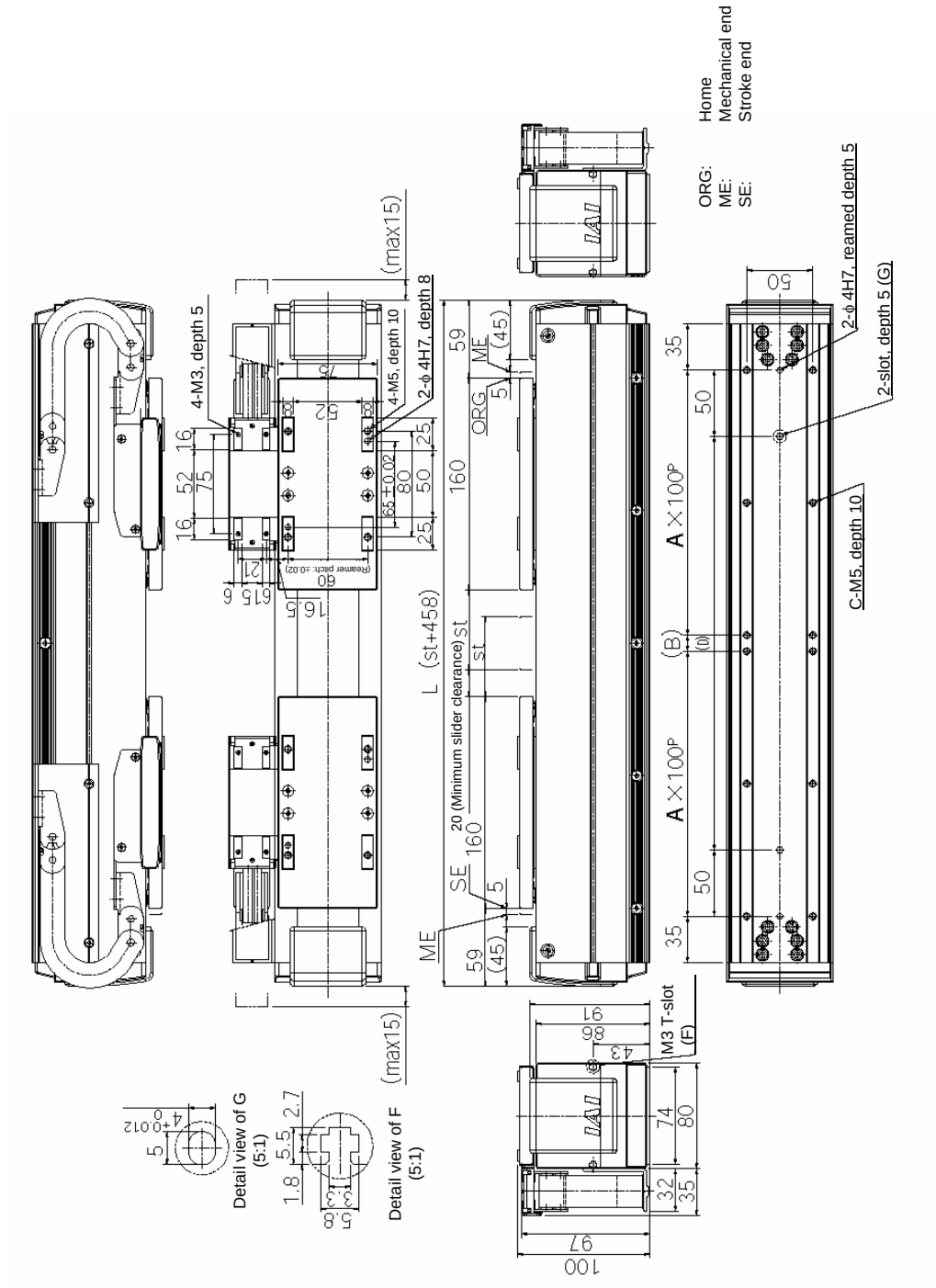
Home
Mechanical end
Stroke end
ORG:
ME:
SE:
(max15)
4-M3, depth 5
4-M5, depth 10
2-φ 4H7, depth 8
2-φ 4H7, reamed depth 5
2-slot, depth 5 (G)
C-M5, depth 10
M3 T-slot (F)
L (st+458)
st
20 (Minimum slider clearance)
A×100P
(B)
Detail view of G (5:1)
Detail view of F (5:1)

S8SM

No.	st	L	A	B	C	D
1	60	518	2	12	12	312
2	120	578	2	72	12	372
3	180	638	2	132	12	432
4	240	698	2	192	12	492
5	300	758	3	52	16	552
6	360	818	3	112	16	612
7	420	878	3	172	16	672
8	480	938	4	32	20	732
9	540	998	4	92	20	792
10	600	1058	4	152	20	852
11	660	1118	5	12	24	912
12	720	1178	5	72	24	972
13	780	1238	5	132	24	1032
14	840	1298	5	192	24	1092
15	900	1358	6	52	28	1152
16	960	1418	6	112	28	1212
17	1020	1478	6	172	28	1272
18	1080	1538	7	32	32	1332
19	1140	1598	7	92	32	1392
20	1200	1658	7	152	32	1452
21	1260	1718	8	12	36	1512
22	1320	1778	8	72	36	1572
23	1380	1838	8	132	36	1632
24	1440	1898	8	192	36	1692

14.3.6 S8HM

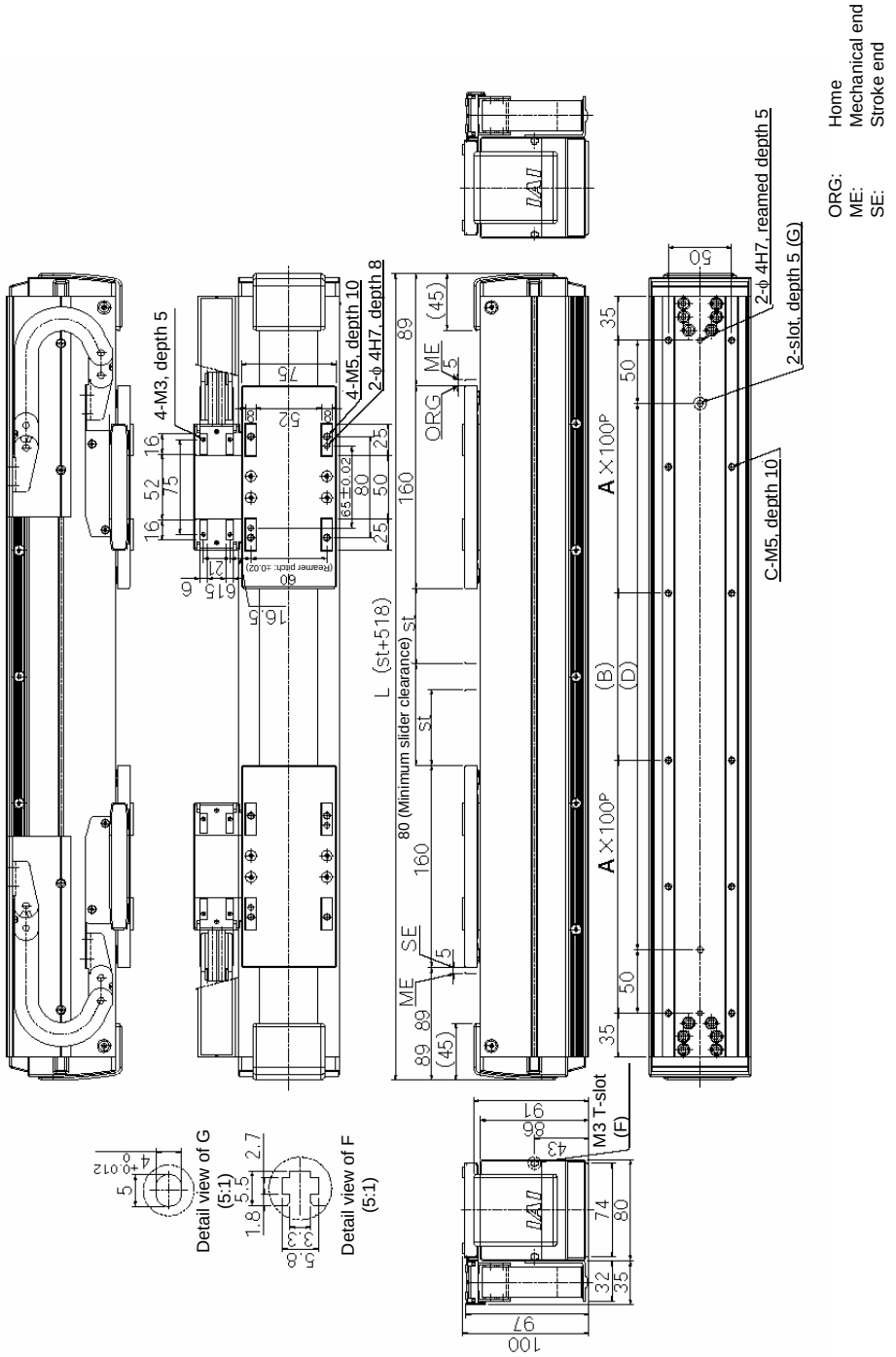
ORG: Home
ME: Mechanical end
SE: Stroke end
4-M3, depth 5
4-M5, depth 10
2-φ 4H7, depth 8
2-φ 4H7, reamed depth 5
2-slot, depth 5 (G)
C-M5, depth 10
M3 T-slot
(F)
L (st+518)
80 (Minimum slider clearance)
st
A×100P
Detail view of G
(5:1)
Detail view of F
(5:1)

S8HM

No.	st	L	A	B	C	D
1	60	638	2	132	12	432
2	120	698	2	192	12	492
3	180	758	3	52	16	552
4	240	818	3	112	16	612
5	300	878	3	172	16	672
6	360	938	4	32	20	732
7	420	998	4	92	20	792
8	480	1058	4	152	20	852
9	540	1118	5	12	24	912
10	600	1178	5	72	24	972
11	660	1238	5	132	24	1032
12	720	1298	5	192	24	1092
13	780	1358	6	52	28	1152
14	840	1418	6	112	28	1212
15	900	1478	6	172	28	1272
16	960	1538	7	32	32	1332
17	1020	1598	7	92	32	1392
18	1080	1658	7	152	32	1452
19	1140	1718	8	12	36	1512
20	1200	1778	8	72	36	1572
21	1260	1838	8	132	36	1632
22	1320	1898	8	192	36	1692
23	1380	1958	9	52	40	1752

14.3.7 S10SS

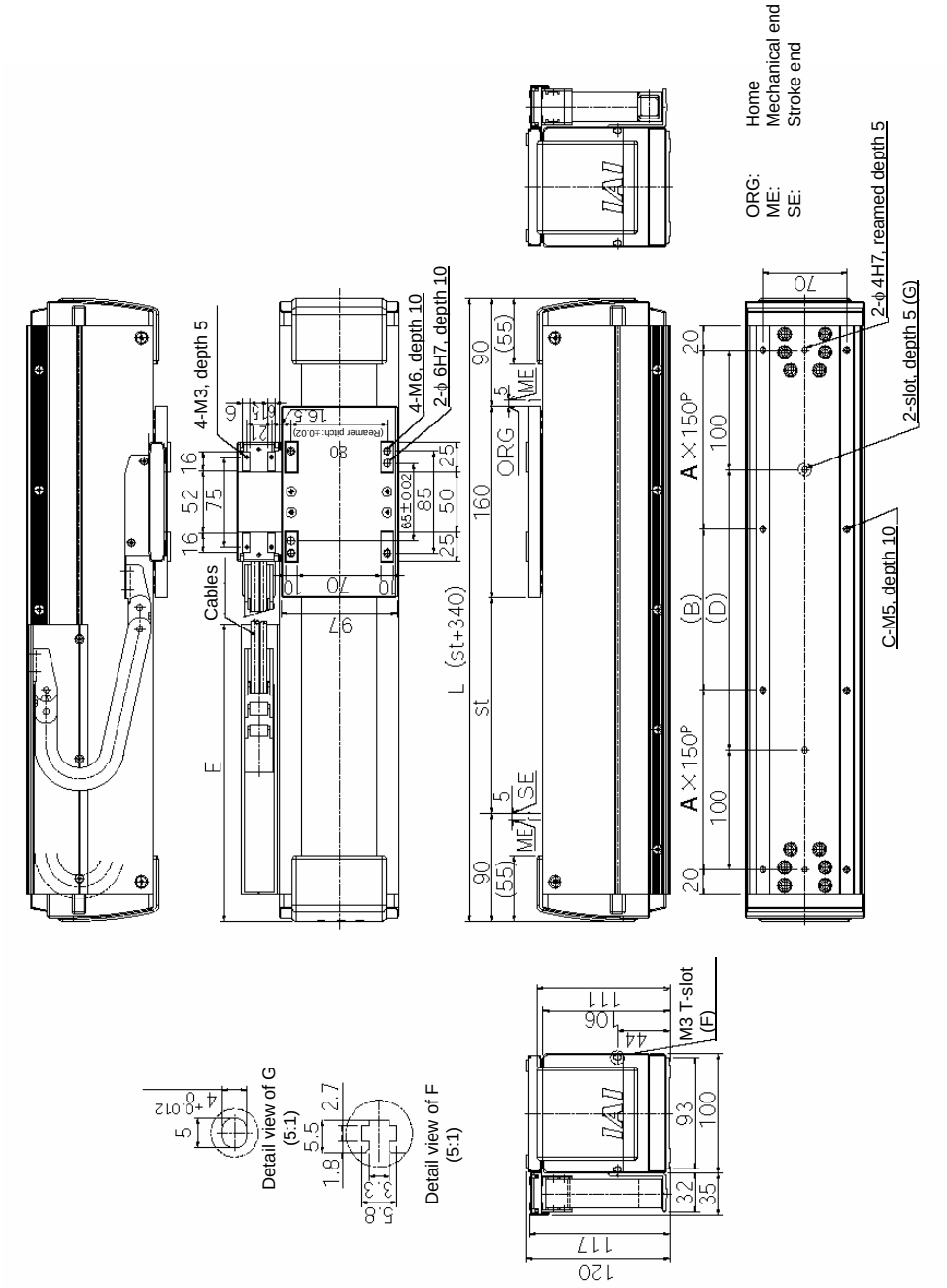
ORG: Home
ME: Mechanical end
SE: Stroke end
4-M3, depth 5
4-M6, depth 10
2-φ 6H7, depth 10
2-φ 4H7, reamed depth 5
2-slot, depth 5 (G)
C-M5, depth 10
Cables
L (st+340)
st
A×150P
Detail view of G (5:1)
Detail view of F (5:1)
M3 T-slot (F)

S10SS

No.	st	L	A	B	C	D	E
1	90	430	1	44	8	144	198
2	180	520	1	134	8	234	248
3	270	610	1	224	8	324	273
4	360	700	2	14	12	414	323
5	450	790	2	104	12	504	373
6	540	880	2	194	12	594	423
7	630	970	2	284	12	684	473
8	720	1060	3	74	16	774	498
9	810	1150	3	164	16	864	548
10	900	1240	3	254	16	954	598
11	990	1330	4	44	20	1044	648
12	1080	1420	4	134	20	1134	698
13	1170	1510	4	224	20	1224	723
14	1260	1600	5	14	24	1314	773
15	1350	1690	5	104	24	1404	823
16	1440	1780	5	194	24	1494	873
17	1530	1870	5	284	24	1584	923
18	1620	1960	6	74	28	1674	948
19	1710	2050	6	164	28	1764	998
20	1800	2140	6	254	28	1854	1048
21	1890	2230	7	44	32	1944	1098
22	1980	2320	7	134	32	2034	1148
23	2070	2410	7	224	32	2124	1173

14.3.8 S10HS

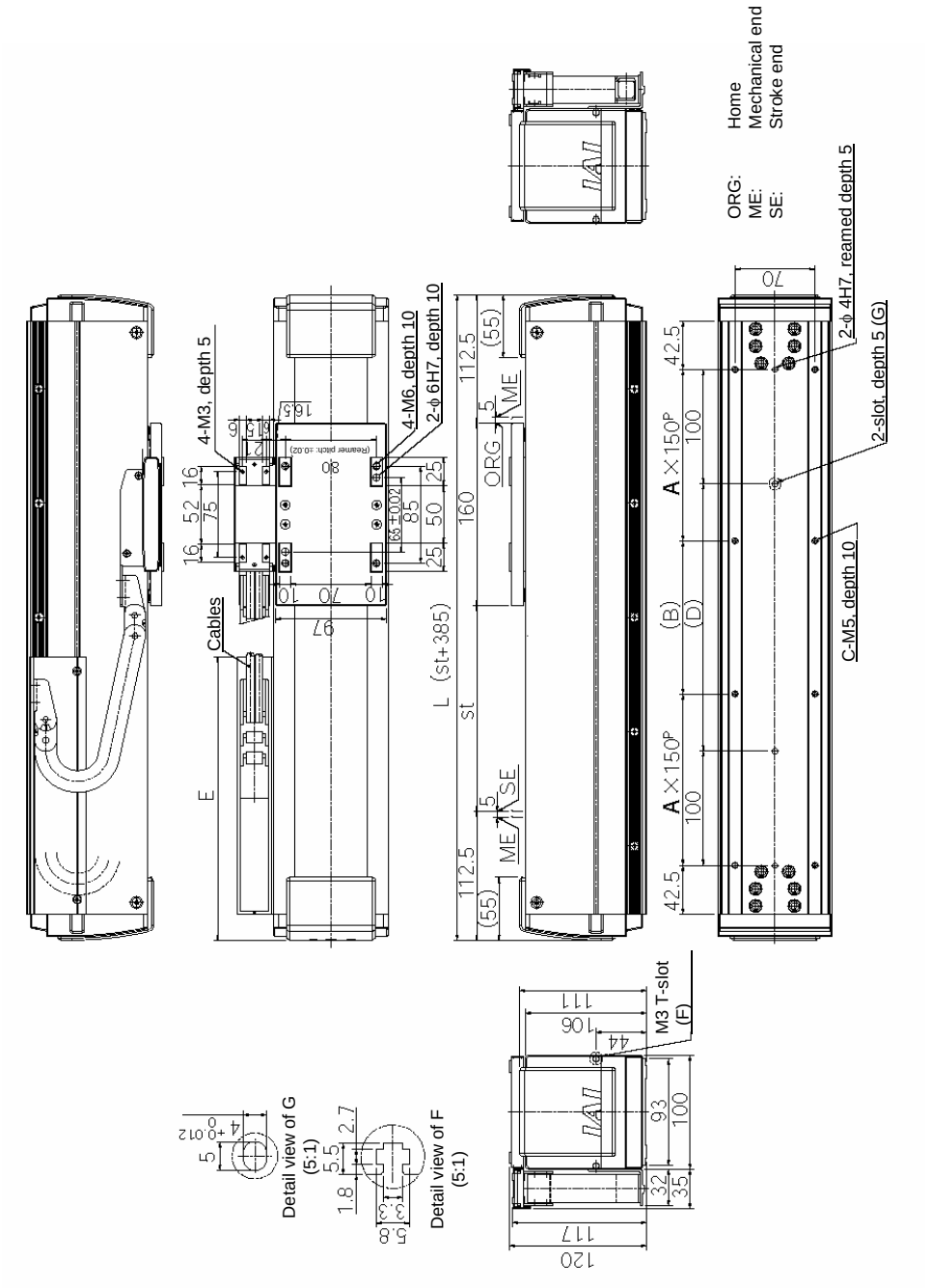
ORG: Home
ME: Mechanical end
SE: Stroke end
4-M3, depth 5
4-M6, depth 10
2-φ 6H7, depth 10
2-φ 4H7, reamed depth 5
2-slot, depth 5 (G)
C-M5, depth 10
Cables
M3 T-slot (F)
Detail view of G (5:1)
Detail view of F (5:1)
L (st+385)
A×150P
(B)
(D)
E
ORG
ME
SE

S10HS

No.	st	L	A	B	C	D	E
1	90	475	1	44	8	144	198
2	180	565	1	134	8	234	248
3	270	655	1	224	8	324	298
4	360	745	2	14	12	414	348
5	450	835	2	104	12	504	398
6	540	925	2	194	12	594	448
7	630	1015	2	284	12	684	473
8	720	1105	3	74	16	774	523
9	810	1195	3	164	16	864	573
10	900	1285	3	254	16	954	623
11	990	1375	4	44	20	1044	673
12	1080	1465	4	134	20	1134	698
13	1170	1555	4	224	20	1224	748
14	1260	1645	5	14	24	1314	798
15	1350	1735	5	104	24	1404	848
16	1440	1825	5	194	24	1494	898
17	1530	1915	5	284	24	1584	923
18	1620	2005	6	74	28	1674	973
19	1710	2095	6	164	28	1764	1023
20	1800	2185	6	254	28	1854	1073
21	1890	2275	7	44	32	1944	1123
22	1980	2365	7	134	32	2034	1148
23	2070	2455	7	224	32	2124	1198

14.3.9 S10SM

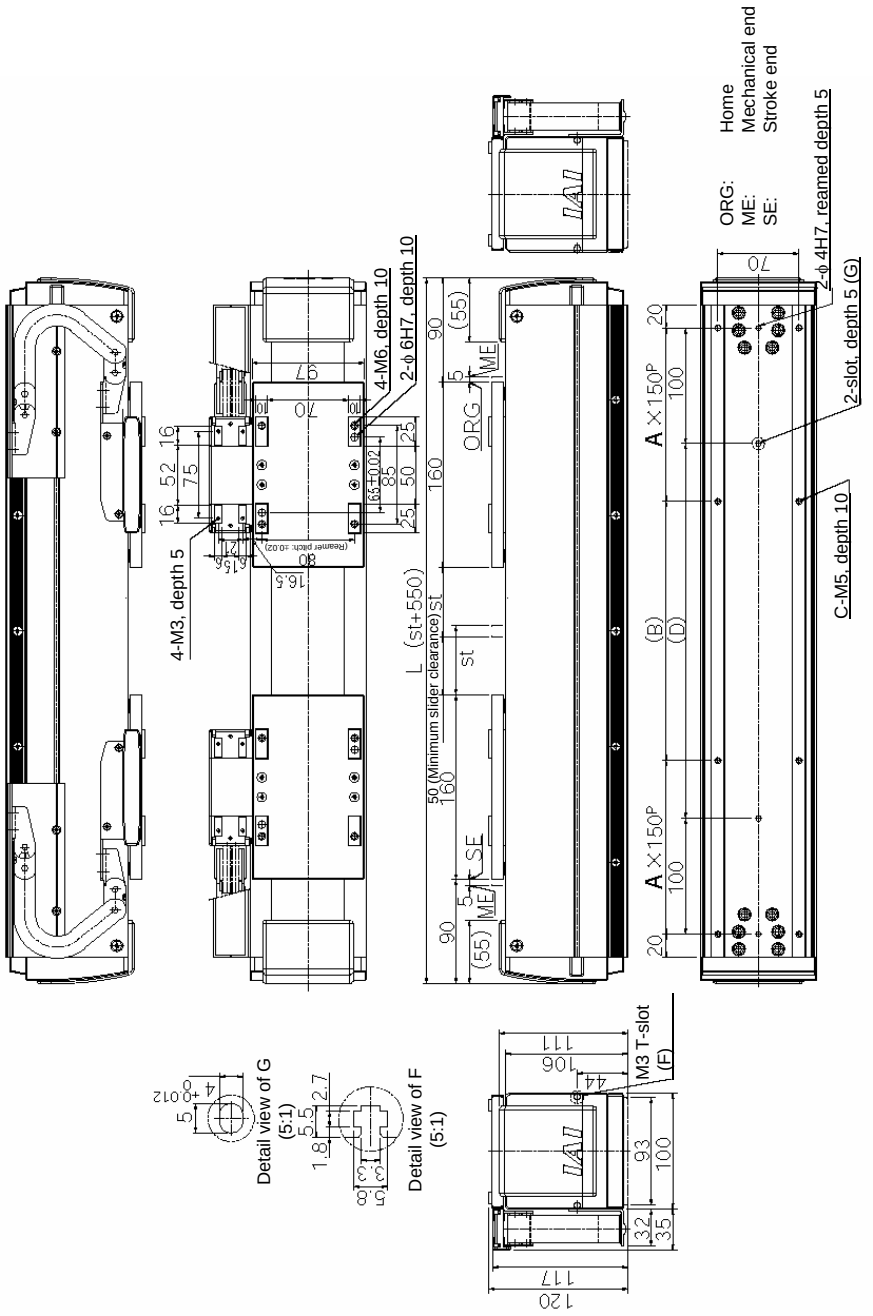
ORG: Home
ME: Mechanical end
SE: Stroke end
2-φ 4H7, reamed depth 5
2-slot, depth 5 (G)
C-M5, depth 10
4-M6, depth 10
2-φ 6H7, depth 10
4-M3, depth 5
L (st+550)
50 (Minimum slider clearance)
A ×150P
M3 T-slot (F)
Detail view of G (5:1)
Detail view of F (5:1)

S10SM

No.	st	L	A	B	C	D
1	60	610	1	224	8	324
2	150	700	2	14	12	414
3	240	790	2	104	12	504
4	330	880	2	194	12	594
5	420	970	2	284	12	684
6	510	1060	3	74	16	774
7	600	1150	3	164	16	864
8	690	1240	3	254	16	954
9	780	1330	4	44	20	1044
10	870	1420	4	134	20	1134
11	960	1510	4	224	20	1224
12	1050	1600	5	14	24	1314
13	1140	1690	5	104	24	1404
14	1230	1780	5	194	24	1494
15	1320	1870	5	284	24	1584
16	1410	1960	6	74	28	1674
17	1500	2050	6	164	28	1764
18	1590	2140	6	254	28	1854
19	1680	2230	7	44	32	1944
20	1770	2320	7	134	32	2034
21	1860	2410	7	224	32	2124

14.3.10 S10HM

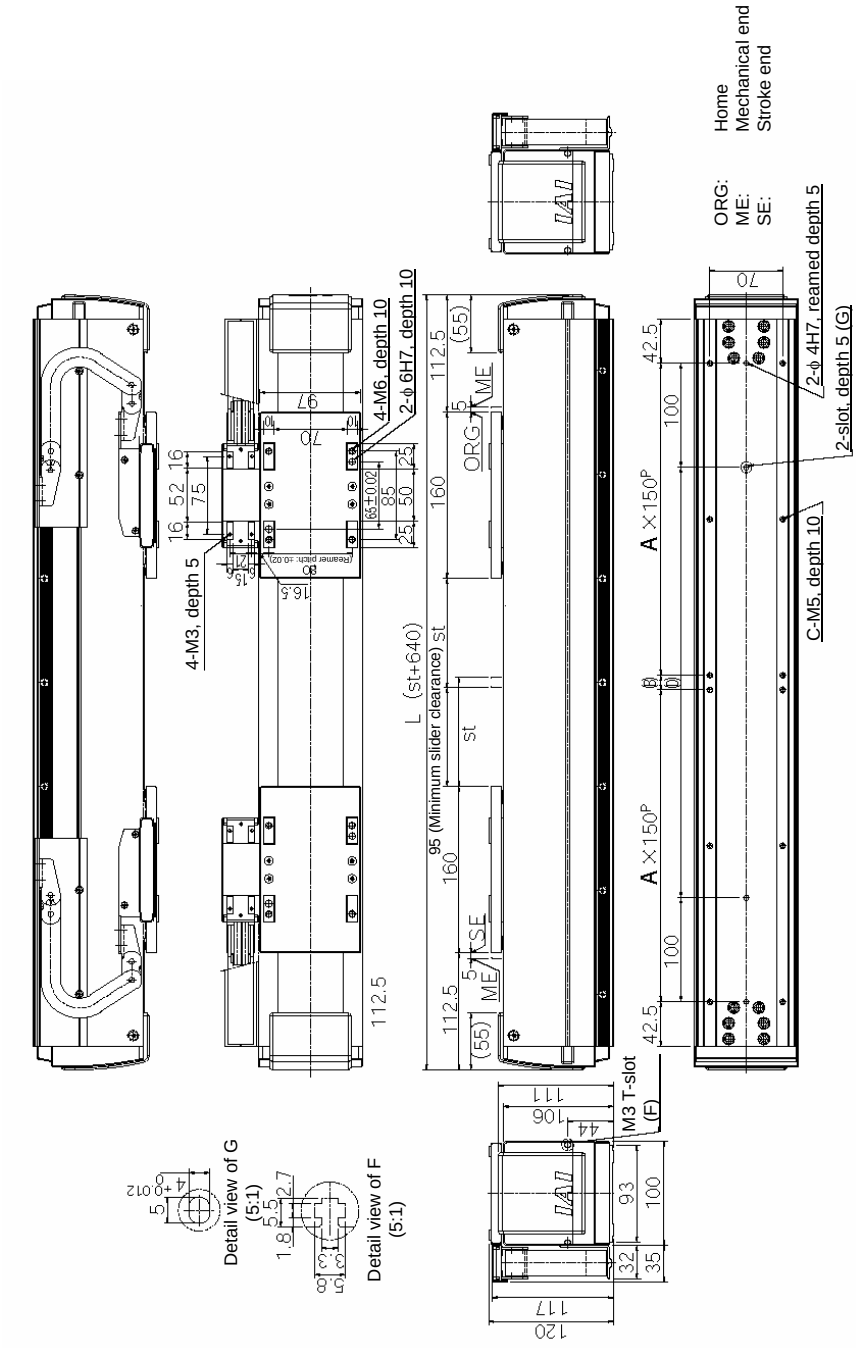
Home
Mechanical end
Stroke end
ORG:
ME:
SE:
4-M6, depth 10
2-φ 6H7, depth 10
4-M3, depth 5
2-φ 4H7, reamed depth 5
2-slot, depth 5 (G)
C-M5, depth 10
M3 T-slot (F)
95 (Minimum slider clearance)
L (st+640)
A ×150P
Detail view of G (5:1)
Detail view of F (5:1)

S10HM

No.	st	L	A	B	C	D
1	105	745	2	14	12	414
2	195	835	2	104	12	504
3	285	925	2	194	12	594
4	375	1015	2	284	12	684
5	465	1105	3	74	16	774
6	555	1195	3	164	16	864
7	645	1285	3	254	16	954
8	735	1375	4	44	20	1044
9	825	1465	4	134	20	1134
10	915	1555	4	224	20	1224
11	1005	1645	5	14	24	1314
12	1095	1735	5	104	24	1404
13	1185	1825	5	194	24	1494
14	1275	1915	5	284	24	1584
15	1365	2005	6	74	28	1674
16	1455	2095	6	164	28	1764
17	1545	2185	6	254	28	1854
18	1635	2275	7	44	32	1944
19	1725	2365	7	134	32	2034
20	1815	2455	7	224	32	2124

Catalog No.: MJ3646-1A

IAI
Quality and Innovation

IAI America, Inc.

Head Office: 2690 W. 237th Street, Torrance, CA 90505
TEL (310) 891-6015 FAX (310) 891-0815
Chicago Office: 1261 Hamilton Parkway, Itasca, IL 60143
TEL (630) 467-9900 FAX (630) 467-9912
Atlanta Office: 1220 E. Kenneston Circle, Marrietta, GA 30066
TEL (678) 354-9470 FAX (678) 354-9471

Home page: www.intelligentactuator.com

IAI Industrieroboter GmbH

Ober der Röth 4, D-65824 Schwalbach am Taunus, Germany
TEL 06196-88950 FAX 06196-889524

The information contained in this document is subject to change without notice for the purpose of product improvement.
Copyright © 2006. Apr. IAI Corporation. All rights reserved.