HUEGLI TECH SWITZERLAND



Technical Manual

Filename:
EABM030410EN.docx

Rev. 10
Date: 18/04/2014

ID Document
EABM0304EN

Products:

HT GC310/HT GC350/HT GC500/HT GC500Plus

Revision	Date	Pages	Notes
01	07/05/2009	102	The first version of the manual, drawn-up for version 01.00 of the controller.
02	15/12/2009	103	Added par. 2.18 and other minor changes.
03	13/01/2010	116	HT GC350 and HT HT GC500 model boards have been introduced.
04	30/07/2010	127	Valid for the 1.09 version of the board.
05	30/10/2010	127	Valid for 1.10 version of the board. 2.1.5.5, 3.3, 4.3, 4.4.1, 4.5.1, 7.1, 7.5.1, 8.18, 9.18
06	15/04/2011	155	Document format modified.
07	03/11/2011	161	Valid for 1.13 version of the board. The 'HT GC500*Plus*' model board has been introduced.
08	27/11/2012	145	Valid up to 1.23 version of the board.
09	07/04/2014	145	Document format modified.
10	29/04/2014	207	Total review of the manual, valid for 1.33 version of the board.

Content

1. Introduction 1
1.1 Reference documents 1
1.2 Safety information 1
1.3 Recycling information 2
1.4 Introduction and prerequisites 2
1.5 Notes on the configuration of the device parameters 2
1.6 Definitions 3
1.6.1 Anomalies 3
1.6.2 Acronyms 4
1.7 Conventions 5
1.8 Firmware revisions 5

2. Views of the devices 6

3. Installation 10
3.1 Mounting 10

4. Technical features 12

5. Connections 16
5.1 Common connections for all devices 16
5.1.2 Functional earth JC 16
5.1.3 Device JB supply 16
5.1.4 Connection to the public grid (or to common bus for HT GC500 and HT GC500^{Plus} only) JF 17
5.1.5 Connection to the generator JE 18
5.1.6 Voltmeter transformers Aron insertion o 19
5.1.7 Current transformer connection (CT) JD. 20
5.1.8 Auxiliary current. 21
5.1.8.1 Using a CT 21
5.1.8.2 Using a TOROID for auxiliary current (only from software version 01.12) 21
5.1.9 Engine connection JH 22
5.1.9.1 JH-2 COMMON PLUS Common positive 22
5.1.9.2 JH-1 START Command for the engine starter motor 23
5.1.9.3 JH-3 FUEL SOLENOID Fuel solenoid command 23
5.1.9.4 JH-4 and JH-5 +D Excitation and working of the charge alternator 24
5.1.10 Speed measurement (PICK-UP or W) JL-1, JL-2 and JL- 3 25
5.1.10.1 Magnetic pick-up 25
5.1.10.2 W signal 26
5.1.10.3 Revolutions measurement from frequency 26
5.1.11 Analogue resistive sensors (JM -1, JM-2, JM-3, JM-4) 26
5.1.11.1 Input JM-1 Analogue reference (Analog Reference) 27
5.1.11.2 Input JM-4 Coolant Temperature (CT Coolant Temperature) 28
5.1.11.3 JM-3 input oil pressure (OP Oil Pressure). 28
5.1.11.4 Input JM-2 Fuel Level (FL, Fuel Level) 29
5.1.12 JN digital inputs 29
5.1.13 JI relay digital outputs 30
5.1.14 Outputs for JG loads change-over command 32
5.1.15 Serial port 33

5.1.16 JO engine CAN-BUS connection. 33
5.2 Additional connectors for HT GC350 / HT GC5xx 34
5.2.1 Additional digital inputs (JV, JU) 35
5.2.1.1 JV digital inputs (HT GC350/HT GC5xx) 35
5.2.1.2 JU digital inputs (HT GC350/HT GC5xx) 35
5.2.2 Additional digital outputs (JT, JS, JR, JSB, JRB) 36
5.2.2.1 JS relay outputs (HT GC350/HT GC500) 36
5.2.2.2 JS relay outputs (HT GC350/HT GC500) 36
5.2.2.3 JR relay outputs (HT GC350/HT GC500) 37
5.2.3 JSB static outputs (HT GC500 Plus) 38
5.2.4 JRB relay and static outputs(HT GC500 Plus) 38
5.2.5 JZ – Additional serial communication port 39
5.3 Additional connectors for HT GC5xx 39
5.3.1 JP Interface PMCBUS (HT GC5xx) 39
5.3.2 JQ – PWM signal outputs (HT GC5xx) 39
5.3.3 JW – Powered analogue inputs (HT GC500) 40
5.3.4 JWB - Analogue inputs (HT GC500Plus) 40
5.3.5 Use of JW and JWB analogue inputs with potentiometers 41
5.3.6 JY – Analogue output (HT GC500Plus) (AO_CONTROLLER_01) 41
5.3.7 JX - Analogue output (HT GC500Plus) (AO_CONTROLLER_02) 42

6. Front panel 43
6.1 Pushbuttons 44
6.2 Warning lights 46
6.3 Multifunctional display 48
6.3.1 Lighting 48
6.3.2 Contrast adjustment 49
6.3.3 Mode navigation 49
6.3.4 Structure of display areas 49
6.3.5 (P.XX) Programming 50
6.3.6 (S.XX) Status information 50
6.3.6.1 S.01 STATUS 51
6.3.6.2 S.02 ANOMALIES 51
6.3.6.3 S.03 PLANT 52
6.3.6.4 S.04 SERIAL COMMUNICATION 52
6.3.6.5 S.05 CAN-BUS 53
6.3.6.6 S.06 BOARD 53
6.3.6.7 S.07 FUEL PUMP 54
6.3.6.8 S.08 DIGITAL INPUT 54
6.3.6.9 S.09 DITEL DIGITAL INPUT 54
6.3.6.10 S.10 DIGITAL OUT 55
6.3.6.11 S.11 DITEL DIGITAL OUT 55
6.3.6.12 S.12 ANALOGUE INPUTS 55
6.3.6.13 S.13 DIGRIN/DITHERM ANALOGUE INPUTS 56
6.3.6.14 S.14 DIVIT ANALOGUE INPUTS 56
6.3.6.15 S.15 ANALOGUE OUTPUTS 56
6.3.6.16 S.16 DANOUT ANALOGUE OUTPUTS 56
6.3.7 (M.XX) Electrical measure. 57
6.3.7.1 M.01 MAINS (MAINS/BUS for HT HT GC5xx) 57

6.3.7.2 M.02 GENERATOR 57
6.3.7.3 M.03 CURRENTS 57
6.3.7.4 M.04 POWERS 1 57
6.3.7.5 M.05 POWERS 2 57
6.3.7.6 M.06 ENERGY 1 58
6.3.7.7 M.07 ENERGY 2 58
6.3.7.8 M.08 SYSTEM 58
6.3.8 (B.XX) Parallel 59
6.3.8.1 B.01 REGULATIONS 59
6.3.8.2 B.02 SYNCHRONIZATION 60
6.3.8.3 B.03 PARALLEL 60
6.3.8.4 B.04 MC100 BOARDS 61
6.3.8.5 B.05 PMC-BUS 1 61
6.3.8.6 B.06 PMC-BUS 2 61
6.3.8.7 B.07 PMC-BUS 3 61
6.3.8.8 B.08 LOAD FUNCTION 1 61
6.3.8.9 B.09 LOAD FUNCTION 2 61
6.3.9 (E.XX) Engine measurements 62
6.3.9.1 E.01 ENGINE 1 62
6.3.9.2 E.02 ENGINE 2 62
6.3.9.3 E.03 COUNTERS 62
6.3.9.4 E.04 CAN-BUS 1 62
6.3.9.5 E.05 CAN-BUS 2 63
6.3.9.6 E.06 CAN-BUS 3 63
6.3.9.7 E.07 CAN-BUS 4 63
6.3.9.8 E.08 CAN-BUS 5 64
6.3.9.9 E.09 CAN-BUS 6 64
6.3.9.10 E.10 EXTERNAL MEASURES 1 64
6.3.9.11 E.11 EXTERNAL MEASURES 2 64
6.3.9.12 E.12 EXTERNAL MEASURES 3 64
6.3.10 (H.XX) Events and history logs. 65

7. Programming 66
7.1 General structure 66
7.1.1 Organization 66
7.1.2 Protection 66
7.1.3 SICES password protection (HT HT GC5xx only) 68
7.2 Operating procedure 69
7.2.1 Access to programming 69
7.2.2 Menu selection 69
7.2.3 Parameters selection 69
7.2.4 Modify a parameter 70
7.2.5 Set up limits 71
7.2.6 Exit from programming 71
7.2.7 Loading default values 71
7.3 Indicative notes 71
7.4 AND/OR logics. 72
7.5 Digital input configuration 74
7.5.1 Functions configurable on digital inputs 75
7.5.2 Virtual digital inputs 84
7.6 Digital outputs configuration 85

7.6.1 Functions configurable on the digital outputs 86
7.7 Conversion curves 88
7.8 Analogue inputs configuration 89
7.8.1 List of generic sensor analogue measurement 92
7.8.2 Virtual digital inputs 93
7.9 Configuration of the analogue outputs 95
7.10 Alternative parameters configuration 95

8. History logs 97
8.1 Access to the display of records 100
8.2 Exit from archives visualization 100
8.3 Log selection 100
8.4 Events pages 100
8.5 Frames for fast/slow analogues 101
8.6 Pages for peaks 102
8.7 Engine diagnostics pages (DTC) 102
8.8 Locked recordings 103
8.9 Deleting of an archive 103

9. Special procedures 104
9.1 Activation of a special procedure 104
9.2 “FUEL LEV.”: level sensor calibration. 105
9.3 "LANGUAGE": language selection 107

10. Working sequence 108
10.1 Controller modes 108
10.1.1 Events 110
10.1.2 Signallings 110
10.2 Mains sensor / parallel bars 112
10.2.1 Sensor for the parallel bars (HT HT GC5xx) 112
10.2.1.1 Signallings 112
10.2.2 Mains sensor 113
10.2.2.1 Status of the mains acquired by a MC100 board (HT HT GC5xx) 113
10.2.2.2 Mains status acquired by a digital input. 113
10.2.2.3 Mains status acquired by the internal sensor 114
10.2.2.4 Mains global status 116
10.2.2.5 Events 117
10.2.2.6 Signallings 117
10.3 Generator 119
10.3.1 Nominal sizes 119
10.3.2 Frequency 119
10.3.3 Voltages 120
10.3.4 Overview 120
10.3.5 Generator status. 121
10.3.6 Events 121
10.3.7 Signallings 121
10.4 Current 123
10.4.1 Fourth current 124
10.5 Engine 126
10.5.1 Nominal power 126
10.5.2 Rated engine speed 126
10.5.3 Engine speed (RPM) 126

10.5.4 Engine running/stopped status acknowledgement 127
10.5.5 Engine commands 128
10.5.5.1 Engine preheating control (PREHEAT). 128
10.5.5.2 Glow plugs pre-heating control (GLOW_PLUGS). 129
10.5.5.3 Using two battery sets (BATT1 e BATT2) 129
10.5.5.4 Control to enable the engine control unit (ECU_ENABLE) 130
10.5.5.5 Fuel solenoid valve control (FUEL) 130
10.5.5.6 Command for the starter (START) 131
10.5.5.7 Gas solenoid valve control (GAS) 131
10.5.5.8 Engine stop command when energized (STOP) 131
10.5.5.9 Idle speed command (IDLE) 131
10.5.6 Manual control sequence 132
10.5.6.1 Manual start 132
10.5.6.2 Manual stop 132
10.5.7 Automatic command sequence 133
10.5.7.1 Automatic startup 133
10.5.7.2 Standard automatic stop 134
10.5.7.3 Automatic emergency stop 134
10.5.8 Masking of protections on oil pressure 135
10.5.9 Events 135
10.5.10 Signallings 136
10.5.11 Fuel pump 137
10.5.11.1 Functioning mode 137
10.5.11.2 Use with an analog level transducer 138
10.5.11.3 To use this function requires: 138
10.5.11.4 Level evaluation 138
10.5.11.5 Pump control 139
10.5.11.6 Events 140
10.5.12 Maintenance 140
10.6 Inhibition to automatic intervention 140
10.6.1 Inhibition from contact 141
10.6.2 Inhibition from clock 141
10.6.3 Inhibition from "power load" (HT GC5xx only) 141
10.6.4 Inhibition due to failure of mains (HT GC5xx only) 141
10.6.5 Inhibition due to “GCB switch not open” (only HT GC5xx) 141
10.6.6 Signallings 142
10.7 Inhibition to taking of load 143
10.7.1 Inhibition from contact 143
10.7.2 Control from serial ports 143
10.7.3 Due to failure of mains (HT GC5xx only) 143
10.7.4 Inhibition due to “GCB switch not open” (only HT GC5xx) 143
10.7.5 Inhibition from MC100 board (HT GC5xx only) 143
10.7.6 Inhibition to synchronization on MCB ongoing (only HT GC5xx) 143
10.7.7 Signallings 144
10.8 Breakers management 145
10.8.1 Digital outputs for the management of the switches 145
10.8.2 Digital inputs for the management of the switches 146
10.8.2.1 Acquiring breakers status 146
10.8.2.2 Switches manual controls 147
10.8.2.3 Request for synchronization (HT GC5xx only) 147
10.8.3 Management logic 147

10.8.3.1 OFF/RESET management logic 147
10.8.3.2 Management logic in MAN and in TEST 147
10.8.3.3 Management logic in AUTO mode 149
10.8.4 Change-over switch. 149
10.8.5 Commutation management 149
10.8.6 Signallings 149
10.8.7 Events 149

11. Anomalies 150
11.1 Silence the horn. 151
11.2 Identify the anomaly 151
11.3 Cancel the anomaly 151
11.4 Signallings 152
11.5 Engine protections OVERRIDE. 155
11.6 Anomalies connected to digital inputs 156
11.7 Anomalies connected to analogue inputs 157
11.8 Anomalies list 158
01 – Minimum generator voltage 158
02 – Maximum generator voltage 158
03 – Minimum generator frequency 158
04 – Maximum generator frequency 159
05 – Belt break (D+ battery-charger failure) 159
06 – Maximum current (51) 159
07 – Manual stop while in AUTO 161
08 – Operating conditions failure 161
11 – Power reverse 161
12 – Gen-set locked 162
13 – Mains circuit breaker (MCB) not closed 162
14 – Genset circuit breaker (GCB) not closed 162
15 – Overload (from contact) 163
16 – Short circuit on the generator (50) 163
17 – Over speed (from contact) 163
18 – Over speed (from engine speed measurement) 163
19 – Overspeed (from generator frequency) 164
21 – Engine not stopped. 164
22 – Overcrank 164
23 – Mains circuit breaker (MCB) not open 164
24 – Genset circuit breaker (GCB) not open 165
25 – Minimum fuel level (from contact) 165
26 – Minimum fuel level (from analog sensor) 165
27 – Low fuel level (from contact) 165
28 – Low fuel level (from analog sensor) 166
29 – High fuel level (from contact) 166
30 – High fuel level (from analog sensor) 166
31 – High coolant temperature (from contact) 166
32 – High coolant temperature (from analog sensor) 167
33 – Maximum coolant temperature (from contact) 167
34 – Maximum coolant temperature (from analog sensor) 167
37 – Starter battery voltage, low 167
38 – Starter battery voltage, high 168
39 – Service required 168

41 – Minimum oil pressure (from contact) 168
42 – Minimum oil pressure (from analogue sensor) 169
43 – Low oil pressure (from contact) 169
44 – Low oil pressure (from analog sensor) 169
45 – Maximum auxiliary current 169
48 – Emergency stop 170
49 – Maximum power 170
51 – High controller temperature 170
52 – Generator voltages unbalance 170
53 – Generator current unbalance 171
55 – Wrong phases sequence 171
57 – Clock not valid 171
61 – Lost Excitation 171
62 – Faulty engine CAN-BUS 0 link 172
64 – Fuel pump failure 172
65 – Low coolant temperature (from analog sensor) 172
98 – Engine communication lost. 172
104 – Minimum speed (from engine speed measurement) 172
105 – Belt from Can-Bus is broken 173
106 – Maximum exported reactive power 173
118 – Overspeed from CAN BUS 173
132 – High coolant temperature from CAN-BUS 173
134 – Maximum coolant temperature from CAN-BUS 173
135 – Minimum coolant level from CAN-BUS. 174
136 – Low coolant level from CAN BUS 174
137 – Low battery voltage from CAN BUS 174
142 – Minimum oil pressure from CAN BUS 174
144 – Low oil pressure from CAN BUS 174
158 – High oil temperature from CAN BUS 175
159 – Maximum oil temperature from CAN BUS 175
160 – Water in fuel from CAN BUS 175
198 –Warnings from CAN BUS (cumulative) 175
199 – Alarms from CAN BUS (cumulative) 175
200 – (HT GC5xx only) PMCB bus link fault 176
201 – (HT GC5xx only) Duplicated address on PMCB bus 176
202 – (HT GC5xx only) Wrong number of gen. over the PMCB BUS 176
204 – (HT GC5xx only) Failure to close NECB switch 176
205 – (HT GC5xx only) Failure to open NECB switch 176
252 – Expansion modules missing (EXBUS) 177
253 – Missing analogue measurement (EXBUS) 177
254 – Duplicate address (EXBUS) 177
255 – Disconnected sensor (EXBUS) 177
271 – (HT GC5xx only) Failure to parallel on GCB 177
272 – (HT GC5xx only) MCB parallel failure (reverse parallel) 178
273 – (HT GC5xx only) Inconsistent parameters 178
274 – (HT GC5xx only) Production line open 178
275 – (HT GC5xx only) Interface device not open 178
276 – (HT GC5xx only) Alarm from master device 179
277 – (HT GC5xx only) GCB cannot be closed 179
278 – (HT GC5xx only) MCB cannot be closed 179

12. Other functions 180
12.1 Clock 180
12.1.1 Engine TEST startup weekly planning. 180
12.1.2 Working time intervals weekly planning. 181
12.1.3 Weekly schedule of forced intervention hours. 181
12.2 Thermometer 182
12.3 Counters 182
12.3.1 Counters reset 184
12.4 Gen-set lock 184
12.5 Loads protection from mains breaker damages 184
12.6 Load thresholds 184
12.6.1 Low power 185
12.6.2 High power 185
12.7 EJP function 185
12.8 PICO function 186
12.9 Speed control 187
12.10 Serial ports 187
12.11 CAN-BUS connection with engines 188
12.12 Report of faults (HT GC350, HT GC500, HT GC500^{Plus}) 188
12.13 Expansion modules 188
12.14 Non-volatile memory 189

Index

A

AIF.0000 ..... 41; 42
AIF.1001 92
AIF.1101 92
AIF.1111 ..... 92; 128
AIF.1201 92
AIF.1211 92
AIF.1221 ..... 92; 138
AIF.1601 92
AIF.1603 92
AIF.1605 92
AIF.1641 92
AIF.2001 ..... 65; 90; 92
AIF.2003 ..... 65; 90; 92
AIF.2005 ..... 65; 90; 92
AIF.2051 92
AIF.2303 186
AOF.3001 136
AOF.3011 136
AOF.3013 136
AOF.3015 136
AOF.3023 136
AOF.3025 136
AOF.3035 136
AOF.3101 ..... 89; 121
AOF.3111 122
AOF.3121 ..... 122; 123
AOF.3201 118
AOF.3211 118
AOF.3221 118
AVF.4001 ..... 93; 122
AVF.4006 ..... 93; 122
AVF.4007 ..... 93; 122
AVF.4008 ..... 93; 122
AVF.4009 ..... 93; 122
AVF.4012 ..... 93; 118
AVF.4017 ..... 93; 118
AVF.4018 ..... 93; 118
AVF.4019 ..... 93; 118
AVF.4020 ..... 93; 118
AVF.4023 ..... 93; 123
AVF.4024 ..... 93; 123
AVF.4025 ..... 93; 124
AVF.4026 ..... 93; 125
AVF.4031 ..... 93; 124
AVF.4032 ..... 93; 124
AVF.4033 ..... 93; 124
AVF.4034 ..... 93; 124
AVF.4041 ..... 93; 124
AVF.4047 ..... 93; 95; 124
AVF.4058 ..... 93; 124
AVF.4059 ..... 93; 124
AVF.4063 ..... 93; 124
AVF.4065 ..... 93; 124
AVF.4069 ..... 93; 124
AVF.4071 ..... 93; 124
AVF.4074 93
AVF.4075 93
AVF.4076 93
AVF.4080 93
AVF.4082 93
AVF.4085 93
AVF.4086 94
AVF.4088 94
AVF.4091 94
AVF.4092 94
AVF.4093 94
AVF.4096 94
AVF.4097 94
AVF.4105 94
AVF.4108 94
AVF.4111 94
AVF.4112 94
AVF.4114 94
AVF.4116 94
AVF.4121 94
AVF.4122 94
AVF.4123 94
AVF.4126 94
AVF.4134 94
AVF.4136 94
AVF.4137 94
AVF.4138 94
AVF.4139 94
AVF.4140 94
AVF.4141 94
AVF.4142 94
AVF.4143 94

D

DIF.0000 ..... 30; 35; 75
DIF.0001 ..... 30; 75; 84; 156
DIF.0002 ..... 75; 156
DIF.0003 ..... 30; 76; 156
DIF.0004 ..... 76; 155; 156
DIF.0005 ..... 76; 151
DIF.0006 ..... 30; 76; 146; 162; 164
DIF.0007 ..... 30; 76; 146; 162; 165
DIF.0008 ..... 76; 138; 156; 165
DIF.0009 ..... 30; 76; 138; 156; 166
DIF.0010 ..... 76; 138
DIF.0011 ..... 76; 138
DIF.0012 ..... 76; 138; 156; 166
DIF.0013 ..... 30; 76; 127; 156; 168
DIF.0014 ..... 76; 127; 156; 169
DIF.0015 ..... 76; 156; 166
DIF.0016 ..... 30; 76; 156; 167
DIF.0017 ..... 30; 77; 156; 163
DIF.0018 ..... 77; 156; 163

DIF.0019 ..... 77; 156
DIF.0021 ..... 77; 156; 157
DIF.0022 ..... 77; 156; 157
DIF.0023 ..... 77; 156; 157
DIF.0024 ..... 77; 156; 157
DIF.0026 ..... 77; 109
DIF.0027 ..... 77; 110; 185
DIF.0028 ..... 23; 24; 30; 77; 156; 170
DIF.0029 ..... 77; 110
DIF.0030 ..... 77; 143; 186
DIF.0031 ..... 77; 156; 157
DIF.0032 ..... 77; 156; 157
DIF.0033 77
DIF.0034 ..... 77; 139; 154; 156; 157
DIF.0035 ..... 78; 132
DIF.0036 ..... 78; 146
DIF.0037 ..... 52; 78
DIF.0038 78
DIF.0039 ..... 30; 78; 114
DIF.0040 ..... 30; 78; 141
DIF.0041 ..... 78; 156
DIF.0042 ..... 78; 155; 156
DIF.0043 ..... 78; 155; 156
DIF.0044 ..... 78; 156; 157
DIF.0045 ..... 156; 157
DIF.0046 ..... 79; 156; 157
DIF.0047 ..... 79; 156; 157
DIF.0048 ..... 79; 156; 157
DIF.0049 ..... 79; 156; 157
DIF.0050 ..... 30; 79; 112
DIF.0051 ..... 79; 156; 178
DIF.0052 ..... 79; 147
DIF.0053 79
DIF.0054 ..... 79; 147
DIF.0055 ..... 79; 80; 147
DIF.0056 80
DIF.0058 80
DIF.0059 ..... 76; 78; 80; 155
DIF.0060 ..... 80; 113; 114
DIF.0061 80
DIF.0062 80
DIF.0063 ..... 80; 126
DIF.0064 ..... 80; 96
DIF.0065 ..... 80; 96
DIF.0066 ..... 80; 96
DIF.0067 ..... 80; 96
DIF.0068 ..... 52; 80
DIF.0069 ..... 81; 170
DIF.0070 81
DIF.0071 ..... 81; 147
DIF.0072 ..... 81; 147
DIF.0073 ..... 81; 156; 157
DIF.0074 ..... 81; 91
DIF.0075 ..... 81; 184
DIF.0077 81
DIF.0078 ..... 81; 108
DIF.0079 ..... 81; 108
DIF.0080 ..... 81; 108
DIF.0081 ..... 82; 155
DIF.0085 ..... 82; 187
DIF.0086 ..... 82; 187
DIF.2096 ..... 83; 186
DIF.2241 ..... 83; 137
DIF.2242 ..... 83; 137
DIF.2243 ..... 83; 137
DIF.2710 84
DIF.2711 84
DIF.3005 ..... 84; 176
DOF.0000 ..... 31; 85; 86
DOF.0001 ..... 86; 152
DOF.0002 ..... 86; 128
DOF.0003 ..... 54; 86; 139; 172
DOF.0004 ..... 86; 184
DOF.0005 ..... 86; 110
DOF.0006 ..... 86; 117
DOF.0007 ..... 86; 121
DOF.0008 ..... 86; 136
DOF.0009 ..... 86; 152
DOF.0010 ..... 86; 152
DOF.0011 ..... 86; 153
DOF.0012 ..... 86; 153
DOF.0013 ..... 86; 154
DOF.0014 ..... 77; 78; 86; 128; 131
DOF.0016 ..... 31; 86; 128
DOF.0017 ..... 86; 152
DOF.0018 ..... 86; 152
DOF.0019 ..... 87; 110
DOF.0020 ..... 87; 111
DOF.0021 ..... 31; 87; 152
DOF.0022 ..... 86; 87; 111; 117; 121; 136; 154
DOF.0023 ..... 87; 128
DOF.0024 ..... 87; 128
DOF.0025 ..... 87; 128
DOF.0026 87
DOF.0028 87
DOF.0029 ..... 87; 145
DOF.0030 ..... 31; 87; 146
DOF.0031 87
DOF.0032 87
DOF.0033 ..... 87; 176
DOF.0034 ..... 87; 128
DOF.0035 ..... 87; 145; 149
DOF.0036 87
DOF.0037 ..... 87; 113
DOF.0038 ..... 87; 128
DOF.0039 ..... 87; 128; 129
DOF.0040 87
DOF.0041 ..... 87; 188
DOF.0049 87
DOF.0050 87
DOF.0051 87
DOF.0052 87
DOF.0053 88
DOF.0054 88
DOF.0055 88
DOF.0103 ..... 72; 86; 88; 111; 113; 117; 121; 136; 154

DOF.1034 ..... 88; 139
DOF.2002 ..... 88; 145
DOF.2003 ..... 88; 145
DOF.2032 ..... 88; 146
DOF.2033 ..... 88; 146
DOF.2034 ..... 88; 146; 149
DOF.3153 ..... 48; 88

E

EVT.1001 ..... 97; 110
EVT.1002 ..... 97; 110
EVT.1003 ..... 97; 110
EVT.1004 ..... 97; 110
EVT.1005 ..... 97; 110
EVT.1010 ..... 97; 117
EVT.1011 ..... 97; 117
EVT.1012 ..... 97; 117
EVT.1013 ..... 97; 141
EVT.1014 ..... 97; 141
EVT.1020 ..... 97; 121
EVT.1021 ..... 97; 121
EVT.1022 ..... 97; 121
EVT.1030 ..... 97; 149
EVT.1031 ..... 97; 149
EVT.1032 ..... 97; 149
EVT.1033 ..... 97; 149
EVT.1035 ..... 97; 149
EVT.1036 ..... 97; 149
EVT.1037 ..... 97; 149
EVT.1038 ..... 97; 149
EVT.1040 ..... 98; 135
EVT.1041 ..... 98; 135
EVT.1042 ..... 98; 135
EVT.1043 ..... 98; 135
EVT.1044 ..... 98; 135
EVT.1045 ..... 98; 135
EVT.1050 ..... 98; 135
EVT.1051 ..... 98; 135
EVT.1052 ..... 98; 135
EVT.1053 ..... 98; 135
EVT.1054 ..... 98; 135
EVT.1056 ..... 98; 135
EVT.1057 ..... 98; 135
EVT.1058 ..... 98; 135
EVT.1060 ..... 98; 135
EVT.1061 ..... 98; 135
EVT.1062 ..... 98; 135
EVT.1063 ..... 98; 135
EVT.1070 ..... 98; 140
EVT.1071 ..... 98; 140
EVT.1074 98
EVT.1075 98
EVT.1076 98
EVT.1077 98
EVT.1078 98
EVT.1080 ..... 98; 143
EVT.1081 ..... 98; 143
EVT.1082 ..... 98; 155
EVT.1083 ..... 98; 155
EVT.1091 98
EVT.1092 98
EVT.1093 98
EVT.1094 98
EVT.1095 98
EVT.1096 98
EVT.1097 98
EVT.1098 98
EVT.1099 98

P

P.0000 ..... 67; 68
P.0001 ..... 67; 68
P.0002 ..... 67; 68
P.0003 ..... 67; 68
P.0101 ..... 18; 71; 95; 158; 159; 163; 170; 171
P.0102 .... 69; 72; 95; 119; 120; 158; 159; 163; 170; 171
P.0103 ..... 19; 95
P.0104 ..... 19; 95
P.0105 ..... 72; 95; 112; 114; 119; 158; 159; 164
P.0106 ..... 69; 72; 95; 119; 159; 163; 171
P.0107 ..... 71; 95
P.0108 ..... 21; 95; 124; 186
P.0109 ..... 21; 57; 124; 169; 186
P.0110 ..... 26; 72; 126; 164; 172
P.0111 ..... 26; 72; 126; 164; 172
P.0112 ..... 28; 54; 72; 74; 90; 169
P.0113 ..... 28; 54; 72; 75; 90; 128; 167; 172
P.0114 ..... 29; 54; 72; 75; 90; 138; 165; 166
P.0115 ..... 24; 72; 127; 159
P.0116 ..... 72; 95; 112; 115; 116
P.0117 ..... 17; 95; 112
P.0118 ..... 17; 95; 112
P.0119 ..... 17; 71; 96; 112; 115
P.0124 ..... 21; 57; 58; 123
P.0125 ..... 72; 96; 126; 161; 170; 184
P.0126 ..... 57; 59; 72; 112; 114; 186
P.0127 ..... 26; 72; 126; 164; 172
P.0130 ..... 21; 124; 186
P.0131 ..... 21; 124; 186
P.0132 ..... 21; 125; 186
P.0140 188
P.0141 ..... 54; 55; 74; 85; 177; 189
P.0142 ..... 55; 89; 177; 189
P.0143 ..... 56; 89; 177; 189
P.0144 ..... 56; 95; 177; 189
P.0201 ..... 114; 115; 116
P.0202 ..... 120; 158
P.0203 115
P.0204 115
P.0205 ..... 113; 114
P.0206 ..... 113; 114
P.0207 141
P.0208 141
P.0209 ..... 129; 130; 131
P.0210 ..... 131; 133
P.0211 ..... 129; 133; 164

P.0212 134
P.0213 ..... 131; 135
P.0214 ..... 135; 164
P.0215 134
P.0216 ..... 76; 77; 78; 91; 135; 136; 156; 166; 167; 168; 169; 173; 174
P.0217 ..... 134; 161
P.0218 ..... 134; 147
P.0219 ..... 32; 33; 149
P.0220 ..... 32; 33; 149
P.0221 162
P.0222 109
P.0223 132
P.0224 127
P.0225 127
P.0226 ..... 120; 127
P.0227 ..... 120; 127
P.0228 ..... 119; 127
P.0229 ..... 119; 127
P.0232 127
P.0233 132
P.0234 ..... 23; 130; 135
P.0235 148
P.0236 114
P.0237 114
P.0238 116
P.0239 116
P.0240 134
P.0301 ..... 120; 158
P.0302 ..... 120; 158
P.0303 ..... 120; 158
P.0304 ..... 120; 158
P.0305 ..... 119; 158
P.0306 ..... 119; 158
P.0307 ..... 119; 159
P.0308 ..... 119; 159
P.0309 ..... 159; 160
P.0310 ..... 159; 160
P.0311 163
P.0312 163
P.0313 161
P.0314 161
P.0315 170
P.0316 170
P.0317 171
P.0318 171
P.0319 171
P.0320 171
P.0321 171
P.0322 171
P.0323 ..... 159; 160; 163
P.0324 ..... 159; 160; 163
P.0329 158
P.0331 164
P.0332 164
P.0333 164
P.0334 164
P.0335 167
P.0336 167
P.0337 167
P.0338 167
P.0339 169
P.0340 169
P.0341 169
P.0342 169
P.0343 ..... 138; 166
P.0344 166
P.0345 ..... 138; 166
P.0346 166
P.0347 ..... 138; 165
P.0348 165
P.0349 ..... 24; 159
P.0350 170
P.0351 170
P.0352 170
P.0353 172
P.0354 172
P.0355 ..... 128; 129
P.0356 ..... 128; 129
P.0357 ..... 24; 159
P.0358 172
P.0359 172
P.0362 ..... 167; 168
P.0363 167
P.0364 168
P.0365 168
P.0366 170
P.0367 ..... 22; 125; 169; 170
P.0368 ..... 22; 125; 169; 170
P.0379 173
P.0380 173
P.0400 137
P.0401 ..... 137; 138
P.0402 138
P.0403 138
P.0404 ..... 139; 172
P.0405 139
P.0406 ..... 139; 140
P.0418 ..... 109; 171; 180
P.0419 ..... 109; 110; 171; 180
P.0420 ..... 109; 110; 171; 180
P.0421 ..... 141; 171; 181
P.0422 ..... 141; 171; 181
P.0423 ..... 141; 171; 181
P.0424 ..... 62; 140; 168; 183
P.0425 ..... 140; 168
P.0426 ..... 110; 171; 181; 182; 187
P.0427 ..... 171; 182; 187
P.0428 ..... 171; 182; 187
P.0441 ..... 97; 110; 117; 121; 135; 140; 149
P.0442 99
P.0443 99
P.0452 ..... 176; 187
P.0453 187
P.0454 187
P.0469 68

P.0470 187
P.0472 187
P.0473 187
P.0474 187
P.0475 187
P.0481 184
P.0482 184
P.0483 ..... 184; 185
P.0484 184
P.0485 ..... 184; 185
P.0486 184
P.0491 151
P.0492 ..... 48; 49
P.0493 49
P.0501 ..... 30; 54; 75
P.0507 . 52; 75; 156; 162; 163; 164; 165; 166; 167; 168; 169; 170; 176; 178; 185; 186
P.050875; 141; 156; 157; 162; 163; 164; 165; 166; 167; 168; 169; 170; 176; 178; 185; 186
P.0509 ..... 52; 75; 139; 156
P.0531 ..... 35; 36; 54; 75
P.0570. ..... 54; 75
P.0580 ..... 31; 55; 85
P.0581 ..... 85; 128; 139; 172; 176; 184
P.0585 23
P.0589 ..... 36; 37; 38; 55; 85
P.0601 86
P.0602 86
P.0603 86
P.070029; 34; 62; 63; 64; 126; 127; 128; 164; 167; 169; 171; 172; 173; 174; 175; 188
P.0701 ..... 96; 126; 164; 172
P.0702 ..... 82; 187
P.0703 ..... 29; 34; 188
P.0704 ..... 173; 174; 175
P.0705 188
P.0708 188
P.0709 ..... 171; 172
P.0710 188
P.0711 ..... 172; 188
P.0712 ..... 82; 187
P.0800 ..... 175; 176
P.0802 ..... 58; 68; 145; 177; 178
P.0803 176
P.0804 ..... 141; 143
P.0831 42
P.0840 ..... 42; 84
P.0852 177
P.0853 178
P.0854 ..... 68; 145; 177
P.0855 ..... 68; 145; 149; 178
P.0856 41
P.0857 41
P.0861 42
P.0862 42
P.0863 42
P.0867 42
P.0880 ..... 68; 187
P.0884 ..... 81; 83; 84; 187
P.0885 186
P.0888 187
P.0890 187
P.0899 141
P.0900 ..... 68; 178
P.0902 81
P.0904 83
P.2151 ..... 84; 85
P.2152 84
P.2153 84
P.2154 85
P.2200 ..... 54; 75
P.3200 ..... 55; 85
P.4001 .... 90; 92; 93; 138; 165; 166; 167; 169; 172; 186
P.4002 ..... 65; 90; 157
P.4003 ..... 90; 92; 157
P.4004 ..... 90; 92; 157
P.4005 ..... 90; 91; 92; 155; 157
P.4006 ..... 90; 92; 157
P.4007 ..... 90; 92; 157
P.4008 ..... 90; 91; 92; 157
P.4051 95
P.4052 95
P.4053 95
P.4054 95
P.4055 95
P.4056 95
P.4057 95
P.4058 95
P.4131 177
P.6001 ..... 41; 95
P.6002 42
P.6011 95

S

ST.000 ..... 73; 111
ST.001 ..... 73; 111
ST.002 ..... 73; 111
ST.003 ..... 73; 111
ST.004 ..... 73; 111
ST.008 ..... 73; 154
ST.009 ..... 73; 154
ST.010 ..... 73; 154
ST.011 ..... 73; 154
ST.012 ..... 73; 154
ST.013 ..... 73; 154
ST.014 ..... 73; 154
ST.015 ..... 73; 154
ST.016 ..... 73; 117
ST.017 ..... 73; 84; 117
ST.018 ..... 73; 117
ST.019 ..... 73; 117
ST.020 ..... 73; 117
ST.024 ..... 73; 121
ST.025 ..... 73; 121
ST.026 ..... 73; 121
ST.027 ..... 73; 121

ST.028 ..... 73; 121
ST.032 ..... 73; 136
ST.033 ..... 73; 136
ST.035 ..... 73; 136
ST.036 ..... 73; 136
ST.037 ..... 73; 136
ST.038 ..... 73; 136
ST.039 ..... 73; 136
ST.040 ..... 73; 136
ST.041 ..... 73; 136
ST.048 ..... 74; 113
ST.052 74
ST.053 74
ST.054 74
ST.055 74
ST.056 74
ST.057 74
ST.058 74
ST.064 ..... 74; 84; 149
ST.065 ..... 74; 149
ST.066 ..... 74; 149
ST.068 ..... 74; 149
ST.069 ..... 74; 149
ST.080 ..... 74; 142
ST.081 ..... 74; 142
ST.082 ..... 74; 142
ST.083 ..... 74; 142
ST.084 ..... 74; 142
ST.088 ..... 74; 144
ST.089 ..... 74; 144
ST.090 ..... 74; 144
ST.091 ..... 74; 144
ST.092 ..... 74; 144
ST.093 ..... 74; 144
ST.096 74
ST.097 74
ST.098 74
ST.100 74
ST.101 74
ST.102 74
ST.103 74
ST.104 74
ST.111 74

1. Introduction

1.1 Reference documents

[1] SICES EAAM0302xx – HT GC310 / HT GC350 parameters table.

[2] SICES EAAM0322xx – HT GC500 / HT GC500^{Plus} parameters table.

[3] SICES EAAM0310xx – HT GC310 / HT GC350 / HT GC500 / HT GC500^{Plus} Operator's Manual.

[4] SICES EAAM0199xx – DST4602 / HT GC500 / HT GC500^{Plus} Parallel Functions Handbook

[5] EAAN0347xxEN – HT GC500 - Plant Configuration and power management.

[6] EAAN0340xxEN - HT GC500 Parallel Programming.

[7] SICES EAAS0454xx – HT GCxxx Modbus registers

[8] SICES EAAS0341xx – Serial Communication

[9] BOSCH CAN Specification – Version 2.0 – 1991, Robert Bosch Gmbh

[10] CAN open – Cabling and Connector Pin Assignment – CiA Draft Recommendation DR-303-1

[11] SICES EAAM0136xx – Interface usage handbook J1939.

[12] SICES EAAS0117xx – Can Bus communication with motors.

[13] SICES EAAS0425xx – Can Bus communication with motors.

[14] SICES EAAM458xx – Guide to BoardPrg3.xx.

1.2 Safety information

Many accidents are caused by poor knowledge and the non-observance of safety regulations, which must be observed when operating and/or servicing the machine.

To prevent accidents, before using or servicing the machine you should read, understand and observe the precautions and warnings in this manual.

The following words have been used to identify the safety messages contained in this manual.

WARNING! This word refers to the safety messages contained in this manual about potentially dangerous situations that, unless hazards are prevented, can lead to serious or fatal injuries.

These safety messages describe the usual precautions to be taken in order to avoid hazard situations. Ignoring these precautions can cause serious damage to property and/or injury to persons.

WARNING! This word refers to the safety messages about risks that, unless avoided, can lead to minor or moderate injuries or damage.

The message may also be used for hazards that can cause damage to property and/or injury to persons.

INFORMATION! **This term implies the message provides information useful for performing the current operation, or explanations or clarifications for procedures.**

1.3 Recycling information

Information on the disposal of old electrical and electronic equipment (applicable in European countries that have adopted separate waste collection systems).



Products bearing the barred wheeled waste container symbol cannot be disposed of with normal urban waste. Old electrical and electronic equipment should be recycled in a facility authorized to process these items and dispose of the components. Contact your local authority for information on where and how to deliver such products to the authorized site nearest you. Proper recycling and disposal helps conserve resources and prevents detrimental effects for health and the environment.

1.4 Introduction and prerequisites

This manual details HT GC310, HT GC350, HT GC500 and HT GC500 ^{Plus} boards.

In the document, from this point on, when we want to make reference to a specific board we will use the board name. On the contrary, the following wordings group the following boards:

- **HT GCxxx**: identifies all boards.
- **HT GC3XX** : identifies HT GC310 and HT GC350 boards (so, the boards that don't control parallel).
- **HT GC5xx**: identifies HT GC500 and HT GC500^{Plus} boards (so, the boards that control parallel).

Proper use of this manual requires specific knowledge in gen-set use and installation and parallel applications, if any.

The device uses a large number of configurable parameters and it is therefore impossible to describe all their possible combinations and effects.

In this document it is not present a description detailed of all the programming parameters: to this purpose see [1] [2]. The operator's manual [3]and the parallel functions manual [4]should be considered an integral part of this manual.

The devices are supplied with a generic "default" configuration; is the responsibility of the installer to adjust the operating parameters to his/her specific application.

SICES srl makes considerable efforts for a continuous improvement and upgrading of its own products; therefore, they are subject to modifications both in hardware and software, without prior notice. Some of the features described in this manual may therefore differ from those present in your device.

1.5 Notes on the configuration of the device parameters.

Although most of the parameters and features can be accessed and configured by directly operating on the device, some particular features or **configurations, due to their nature, can only be set or changed through the PC program SICES Board Programmer 3** (hereinafter referred to as “BoardPrg3”) provided on the CD that comes with the device and downloadable for free after registration on the SICES s.r.l. www.sices.eu and www.sicesbrasil.com.br/

It greatly simplifies the configuration of the device and its use is strongly recommended. It also allows you to save the current configuration of the device on a file and to reuse it on other identical devices,

The program also allows the configuration, saving or loading of the characteristic curves of non standard analogue sensors with resistive or live output.

BoardPrg3 can be used on all the SICES devices; connection to the PC can be realized both directly, via the RS232 serial port, via modem, RS485 serial port or ethernet network. To use the program refer to document [14] .

1.6 Definitions

1.6.1 Anomalies

HT GCxxx is able to report and manage all the anomalous conditions occurring during the working of the system. The anomalies are classified into four categories, according to their severity and based on the actions HT GCxxx performs to manage them:

- **Warning.** This term is used to indicate an anomaly that, under the circumstances, doesn't compromise the working of the generator: the operator should, anyway, take note of it, because sooner or later it could worsen in a more serious anomaly.
- **Discharge**. This typology is only available for HT GC5xx_. This term is used to indicate an anomaly that requires the stop of generator. There aren't immediate risks either for the generator or for users. The intervention sequence is:
    - If the generator is connected in parallel with another generator or with mains, HT GC5xx will provide to reduce gradually to zero the power supplied by the generator
    - Then it opens the generator switch (GCB) and, if necessary, closes the mains switch (MCB, where provided, if it is not already closed).
    - The motor is kept running for a configurable time (without load), to allow its cooling (cooling cycle).
    - In the end HT GC5xx stops the motor.
- **Deactivation**. This term is used to indicate an anomaly that requires the stop of generator. There aren't immediate risks for generator, but there are potential risks for users, that, therefore, have to be disconnected immediately from generator. The intervention sequence is:
    - HT GC5xxx immediately opens the generator switch (GCB), regardless the power supplied in that moment. If necessary it closes mains switch (MCB, where provided, if not already closed).
    - The motor is left in action for a configurable time (without load), to allow its cooling (cooling cycle).
    - In the end HT GCxxx stops the motor.
- **Alarm.** This term is used to indicate an anomaly that requires the stop of generator. There are immediate risks for the generator, that therefore, should be stopped immediately. The intervention sequence is:
    - HT GCxxx opens immediately the generator switch (GCB), regardless of the power supplied by the generator. If necessary it closes mains switch (MCB, where provided, if not already closed).
    - HT GCxxx stops the motor, without executing the cooling cycle.

1.6.2 Acronyms

ADPs Indicates the active power (kW) supplied by a generator.

ADPsn indicates the active power (kW) that the generator would supply in case one of the supplying generator (the least priority one) left parallel.

ADPt Indicates the active power (kW) supplied by all generators in parallel: it is the sum of the related ADPs.

AIF Identifies a function for configuring analogue inputs (“Analogue Input Function”). The number that follows the wording “AIF.” represents the code to be set in the parameter that configures the function of the desired analogue input.

AOF Identifies a function for configuring analogue outputs (“Analogue Output Function”). The number that follows the wording “AOF.” is the code to be set in the parameter that configures the function of the desired analogue output.

AVF identifies a function used for the configuration of virtual analogue inputs (“Analogue Virtual Function”). The number that follows the wording “AVF.” represents the code to be set in the parameter that configures the function of the desired analogue virtual input.

BPRs indicates the percentage contribution of this generator to the support of the total load.

BPRsn indicates the percentage contribution that this generator would provide to support the total load in case one of the supplying generator (the least priority one) left parallel.

DIF Identifies a function to configure digital inputs (“Digital Input Function”). The number that follows the wording “DIF.” represents the code that should be set in the parameter that configures the function of the desired digital input.

DOF Identifies a function for the configuration of digital outputs (“Digital Output Function”). The number that follows the wording “DOF.” is the code that should be set in the parameter that configures the function of the desired digital output.

DPRs indicates the active power (%) supplied by the generator: it is the ratio between ADPs and MDPs values.

DPRsn indicates the active power (%) that this generator would provide in case one of the supplying generators (the least priority one) left parallel.

DPRt Indicates the active power (%) supplied by all generators in parallel: it's the ratio between ADPt and MDPt values.

DTC Indicates a diagnostic code received from the engine control unit (ECU) via CAN-BUS (“Diagnostic Trouble Code”).

ECU Indicates the engine electronic control unit (“Engine Control Unit”).

EVT Identifies an event stored within the historical records. The number that follows the wording “EVT.” is the event numeric code.

GCB This term identifies the switch that connects the generator to users (or to the parallel bars for systems with more than one generator) (“Generator Circuit Breaker”).

MCB This term identifies the switch that connects mains to users (or to parallel bars if a switch MGCB doesn't exist) (“Mains Circuit Breaker”).

MDPs Indicates the maximum active power (kW) that can be supplied by a single generator.

MDPt Indicates the maximum active power (kW) that can be supplied by all generators in parallel. It is the sum of the related MDPs.

MGCB Indicates the switch that connects the parallel bars of the generator to users ("Master Generators Circuit Breaker").

MPM See the description of types of systems (par. [4].

MPtM See the description of types of systems (par. [4].

MPtM + MSB See the description of types of systems (par. [4].

MSB See the description of types of systems (par. [4].

MSB + MSTP See the description of types of systems (par. [4].

PMCB Identifies the communication bus (owner of SICES) through which all devices share information in order to allow the parallel functions described in this document [4] ("Power Management Communication Bus").

SPM See the description of types of systems (par. [4].

SPtM See the description of types of systems (par. [4].

SPtM + SSB See the description of types of systems (par. [4].

SSB See the description of types of systems (par. [4].

SSB + SSTP See the description of types of systems (par.[4].

1.7 Conventions

In this document a vertical bar on the right margin or a gray background indicates that the chapter or the paragraph has been amended respect to the previous document's version. Changes in the fields of a table are highlighted with a grey background colour.

1.8 Firmware revisions

Several parts of this manual refer to the controller's software revisions. These revisions are marked with the assigned SICES code (shown on the rear panel of the controller). Software code version has the following format: EB0220156XXYY, where "XX" s the main revision number and "YY" is the secondary revision number. Thus, code EB02201560100 refers to the controller's software release "1.00". The software revision is also displayed on page "S.06" of the LCD display.

Available software codes are:

- EB0220156XXYY: HT GC310 rev. A.
- EB0220162XXYY: HT GC310 rev. B.
- EB0220167XXYY: HT GC350.
- EB0220169XXYY: HT GC500 and HT GC500Plus.

2. Views of the devices

Front panel 1 HT GC310 and HT GC350 type:

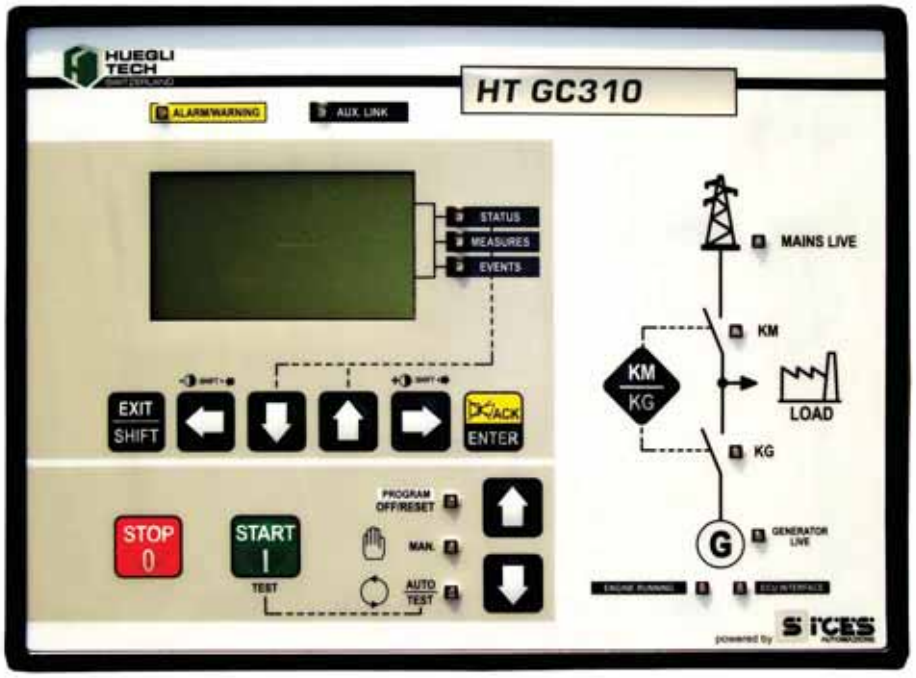

Front panel 1 HT GC500 and HT GC500^{Plus} type:

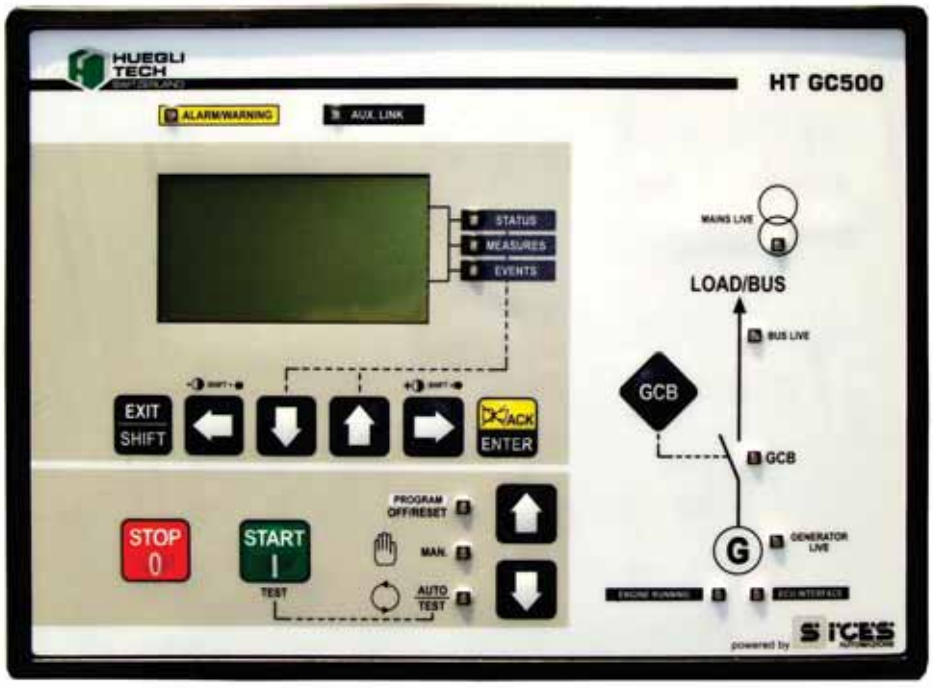

Front panel 2 HT GC310, HT GC350, HT GC500 and HT GC500^{Plus} type:

HT GC310 rear panel

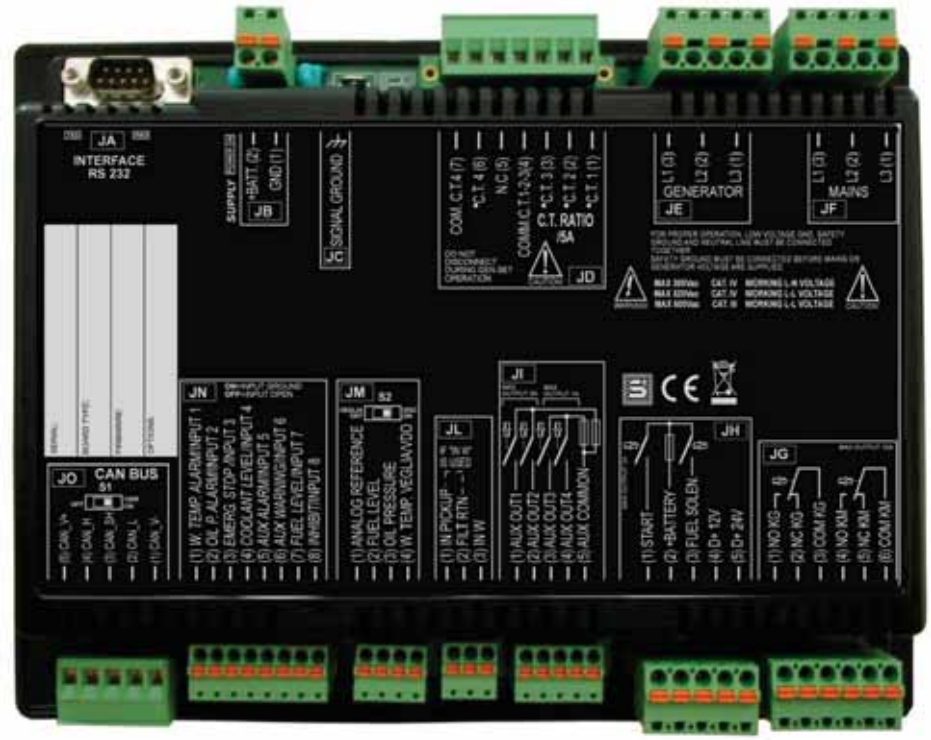

HT GC350 rear panel

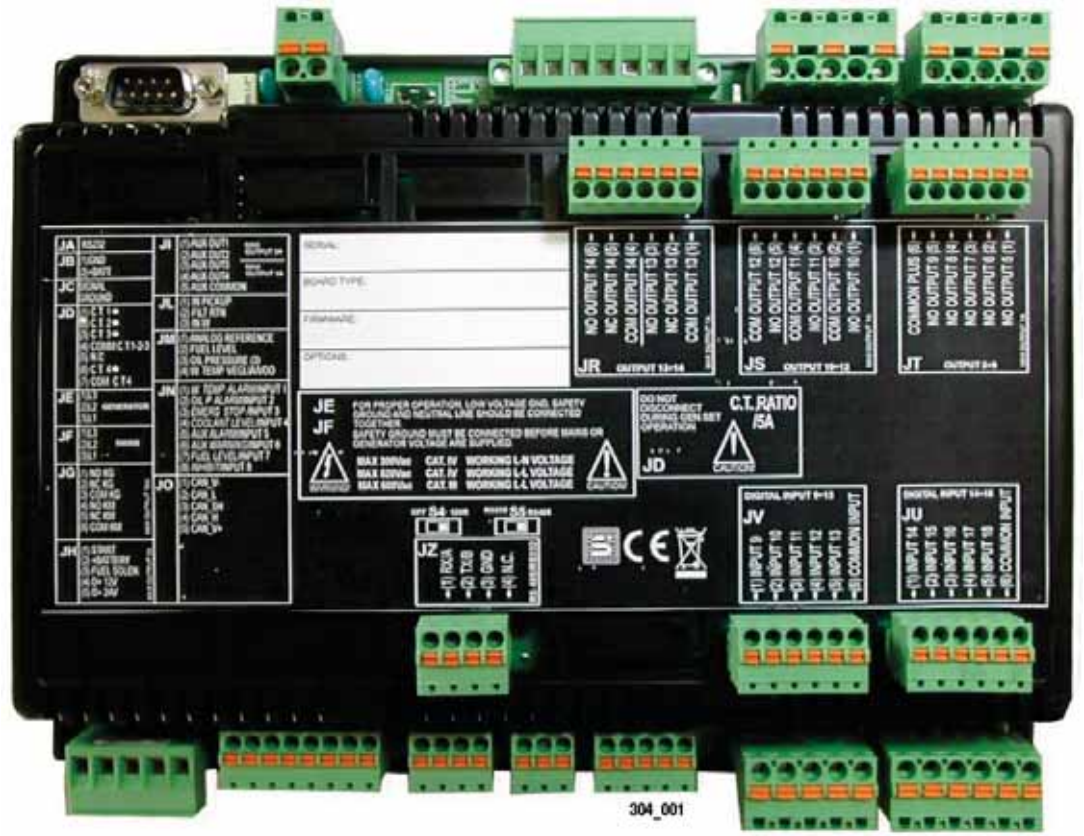

HT GC500 rear panel

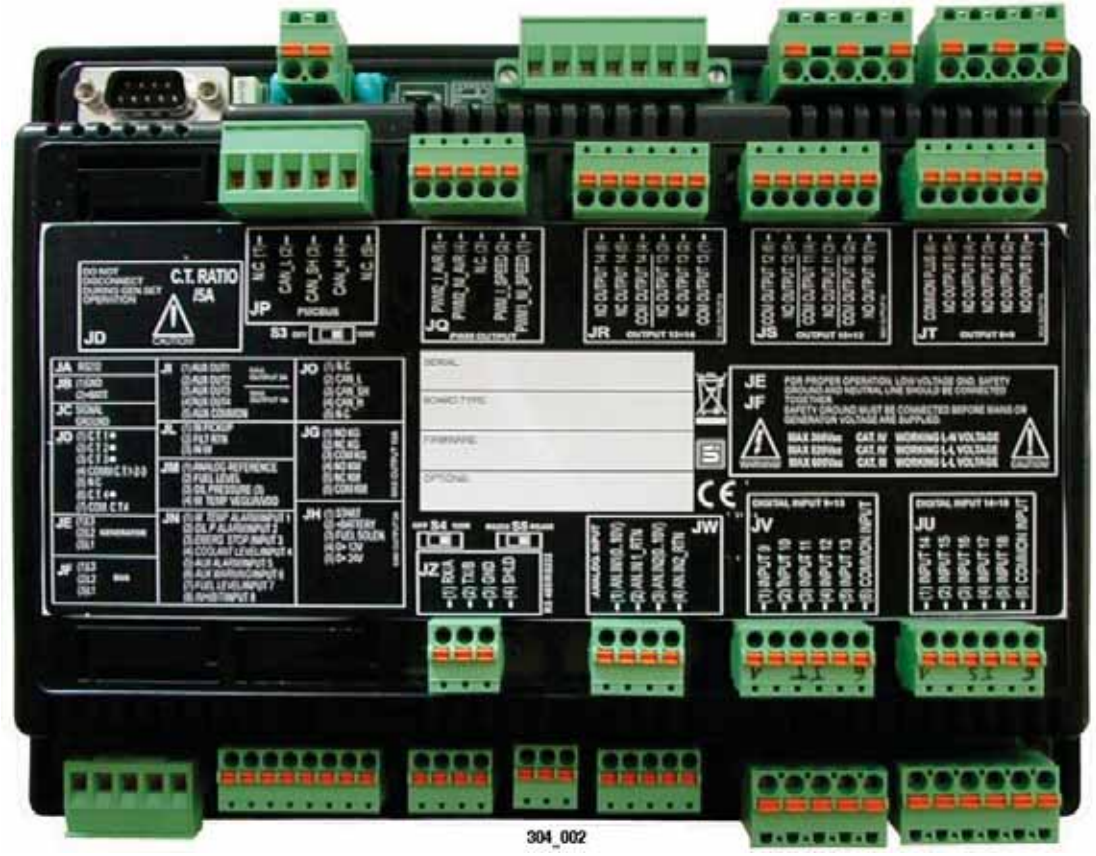

HT GC500^{Plus} rear panel

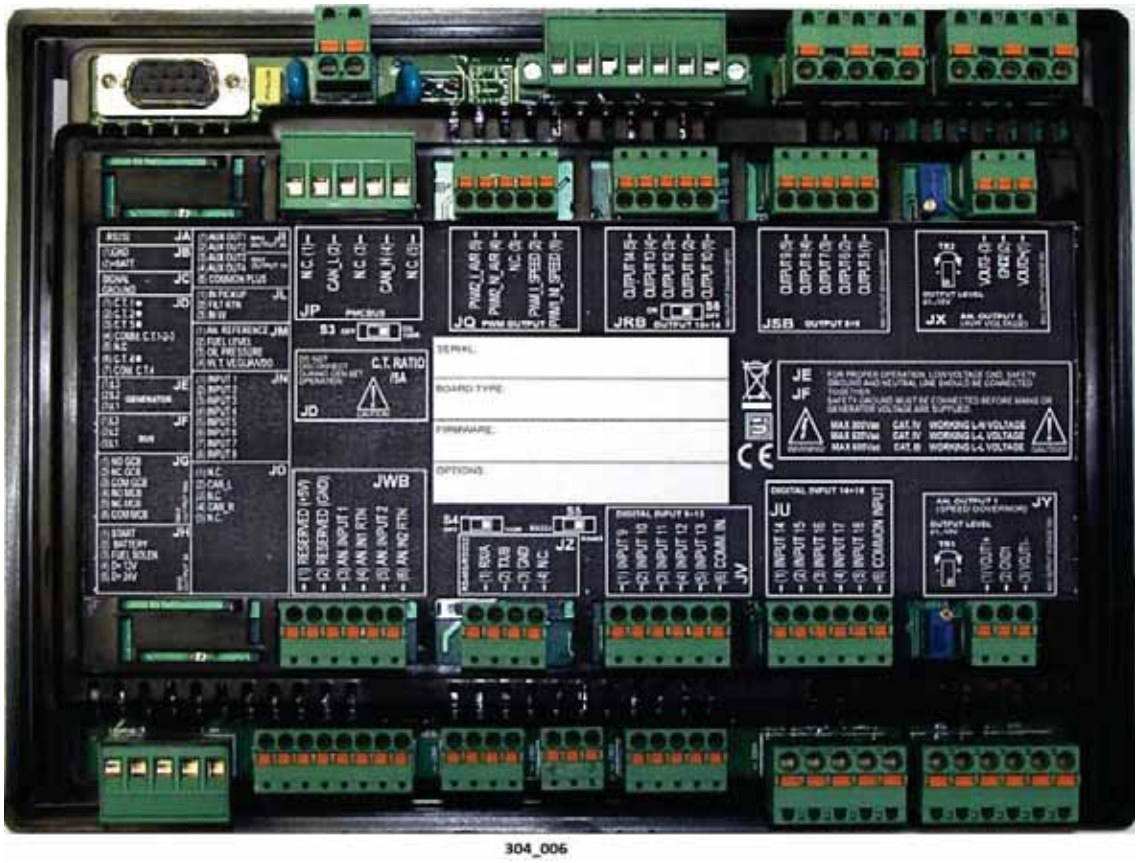

Upper view HT GC310 / HT GC350 / HT GC5xx



Lower view HT GC310 / HT GC350 / HT GC5xx

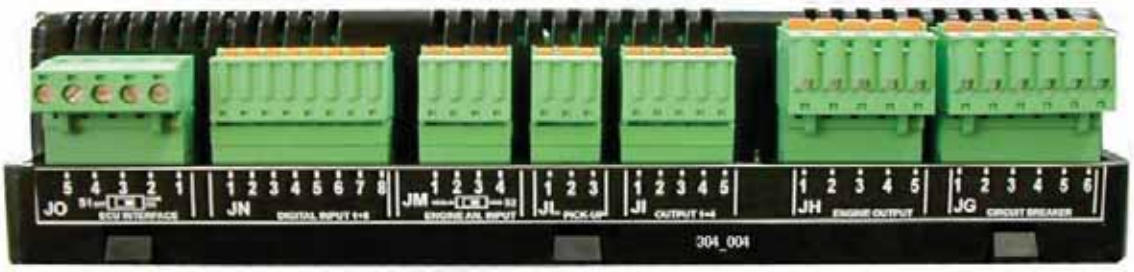

3. Installation

3.1 Mounting

The device must be mounted permanently on an electrical panel or cabinet. The back of the device must be accessed only through the use of keys or tools, and only by personnel authorized to perform maintenance operations. The device must be mounted so as to make it impossible to remove it without using tools.

The dimensions of the mounting slot are 218x159mm. The device is mounted with four hooks with locking screws: once you have put the device in place, insert the hooks in the side slots and tighten the screws. Be careful not to overtighten the screws to avoid damaging the coupling slots on the casing of the device.



Panel cut-out:



Due to the high voltages connected to measurement circuits of the board, all conductive parts of the panel should be connected to the protective earthing.

The protective earthing should constantly be connected where required.

Installing an overcurrent protection device is required for each phase of the mains and generator voltage inputs. The impedance of each alternating voltage measurement input is higher than 1 Mohm. A current protection of 1A can be appropriately used.

The section of the protective earthing conductor, where used, should be at least equal to the section of cables used to wire mains or generator voltage to the board. In addition, it must comply with the limit value of the overcurrent protection used.

For CAT.IV applications, the maximum phase-to-neutral voltage allowed is 300Vac, while the phase-to-phase voltage is 520Vac. Maximum voltage with respect to the protective earth is 300Vac.

For CAT.III applications, the maximum phase-to-neutral voltage allowed is 345Vac, while the phase-to-phase voltage is 600Vac. Maximum voltage with respect to the protective earth is 600Vac.

The device can operate in CAT.IV or CAT.III if the supply minus terminal of the device and the neutral terminal of the generator are connected to the protective earth.

4. Technical features

Features common in all versions, safe for where indicated:

Supply power voltage Vbatt:	7..33VDC with continuous operation. Protection against polarity reversal with built-in self-resetting fuse. Functioning guaranteed during the starting of the engine, in accordance with the technical specification “ST SGS-THOMSON Microelectronics – Starter motor engagement disturbance”. The device identifies the plant operation at 12 or 24 V, to manage its alarms when powered up and whenever OFF/RESET mode is selected. Resolution of the measurement of the battery voltage to 10 bits.
Power consumption in stand-by:	HT GC310: 85 mA @ Vbatt = 13.5 VDC ldisplay lamp off 56 mA @ Vbatt = 27 VDC display lamp off HT GC350 and HT GC5xx: 130 mA @ Vbatt = 13.5 VDC ldisplay lamp off 81 mA @ Vbatt = 27 VDC ldisplay lamp off
Maximum amperage draw in working conditions (all relays, LCD lamp and hooter activated)	HT GC310: 250 mA @ Vbatt = 13.5 VDC 165 mA @ Vbatt = 27 VDC HT GC350 and HT GC5xx: 470 mA @ Vbatt=13.5 VDC 280 mA @ Vbatt=27 VDC
Electric measurements for mains/generator set voltage and currents:	Analogue/digital conversion at 10bit; sampling frequency 10kHz. True RMS measurements (TRMS). Measurement of L-L phase-to-phase voltage Input resistance of voltage measurements: >2,8 Mohm L-L and L-N >1,5 Mohm L-GND and N-GND >10 Mohm L-functional earthing. Measurement of three currents with internal shunts with flyback current and TA ratio in common, plus a fourth independent current for neutral current measurement or differential protection or mains power measurement It is required the use of current transformers with a secondary current of 5 A and minimum power of 1 VA.
Maximum mains/generator voltages allowed:	400Vac nominal inputs: MAX 300 Vac in CAT.IV L-N MAX 520 Vac in CAT.IV L-L MAX 600 Vac in CAT.III L-L Versions with rated 100Vac inputs: MAX 150 Vac in CAT.IV L-N MAX 150 Vac in CAT.IV L-L MAX 300 Vac in CAT.III L-L
Maximum currents allowed:	5 Aac nominal values; possible sinusoidal transient voltage surges up to 20 Aac with progressive loss of the measurement accuracy depending on the amplitude of the surge.

Frequency measurements:	50 or 60 Hz nominal frequencies measured by L1-L2 phase voltages both for the mains and for the generator. For the generator the sensitivity of measurement is highest at low frequency to optimize the recognition of the started engine and decreases with frequency for higher interference rejection Minimum voltages for frequency detection: Versions with 100 Vac inputs: HT GC3XX 13.0 Vac L1-L2 @ 50 Hz mains 13.0 Vac L1-L2 @ 50 Hz generator 3.5 Vac L1-L2 @ 20 Hz generator HT GC5xx 17.5 Vac L1-L2 @ 50 Hz mains 7.5 Vac L1-L2 @ 50 Hz generator 1.3 Vac L1-L2 @ 20 Hz generator Standard 400 Vac inputs: HT GC3XX 50.0 Vac L1-L2 @ 50 Hz mains 50.0 Vac L1-L2 @ 50 Hz generator 14.0 Vac L1-L2 @ 20 Hz generator HT GC5xx 70.0 Vac L1-L2 @ 50 Hz mains 30.0 Vac L1-L2 @ 50 Hz generator 5.5 Vac L1-L2 @ 20 Hz generator
Digital inputs	HT GC310: 8 opto digital inputs; activation with GND negative supply. When opened, the voltage on the input terminals is Vbatt. HT GC350 and HT GC5xx As HT GC310 + two further generators with 5 opto-insulated inputs with two separated supplies in common, that can be connected to GND (so, active inputs to +Vbatt) or to +Vbatt (so, active inputs to GND). For all of the inputs: Voltage minimum threshold (between input positive and negative) for 2 VDC activation/deactivation Typical current with active input: 6 mA @ VBATT= 13.5.5VDC 12 mA @ VBATT= 27.0.0VDC
Relay outputs:	All relay outputs (safe for GCB and FUEL SOLENOID) can be configured individually through parameter. Two relays with positive common input, max 3 A @30VDC for starter motor and fuel solenoid valve. Two couple of relay outputs with positive input in common. 1st pair 1 A @30 VDC 1st pair 3 A @30 VDC Self-restoring fuse and integrated opening power-surge protection diodes. Two relay outputs with changeover voltage-free contacts to control the commutation of remote-control switches, max.10A @250Vac. HT GC350 and HT GC500 Further: 5 relay outputs with positive 1 A @30 VDC input in common with integrated protection diodes. 3 dry-contact NO 1 A @30 VDC relay outputs 2 changeover voltage-free contact relay outputs, max. 1 A@30 VDC All of the 10 outputs have integrated self-resetting fuses.

SSR outputs	8 active outputs with configurable GNDs, each of them max 280 continuative mA and overall maximum current for all outputs of 1 A @ 50°C; maximum interruptible voltage 30 VDC. Integrated overload thermal protection, short-circuit and overvoltage protection. When not active, the outputs are floating.
Excitation output for recharge alternator +D	Two dedicated outputs for 12 VDC or 24 VDC. systems. Excitation maximum current: 280 mA @ 13.5 VDC 135 mA @ 27 VDC
Engine instruments analogue inputs	Three inputs for resistive sensors plus one input for measuring and compensation of the reference potential of their common minus. Measurement resolution of 10 bits. Resistance measuring range: Maximum oil pressure .....400 ohm Maximum coolant temperature .....400/2800 ohm Maximum fuel level .....400 ohm Two different scales can be set for the coolant temperature. The three measurement inputs can also be used as digital inputs with GND activation. Common voltage compensation range of sensors: -0.5 / +2.5 VDC @ Rsens=100 ohm
Analog inputs	HT GC5xx: Two 0..10 VDC inputs Input impedance: 470 kohm Measurement resolution of 10 bits. Both inputs offer the possibility of differential measurement to compensate the differences of negative measurement with reference to GND. Compensation range: -10 /+9 VDC Moreover, on HT GC500*Plus* there are a 5VDC (J15-5) regulated and protected output and an internal GND terminal that can be used as reference for external potentiometers on the two analogue inputs.
Pick-up input or signal W to measure engine speed	Filtered for DC currents blocking. Minimum voltage 1.25 Vac @ 3 kHz Maximum voltage 60 Vac., Internal additional filter insertable for W signal measurement.
PWM outputs	HT GC5xx Couple of differential outputs with PWM signal, 5 VDC voltage and 2500 Hz frequency, for the connection to SICES PWM Converter device.
Analog outputs	HT GC500*Plus* Two independent ±10 VDC live outputs with 13-bit resolution for engine speed and AVRs, both galvanic insulated. Each output has an integrated trimmer to reduce the maximum output voltage, preserving in this way signal resolution.
Communication	1st RS232 serial port with 9-pole connector HT GC310: Engine J1939 CAN-BUS and MTU with galvanic isolation with external power supply and terminating resistor that can be inserted via the switch. HT GC350: 2nd Serial port selectable through RS232/RS485 switch and terminating resistor insertable through the switch Engine J1939 CAN-BUS and MTU with galvanic isolation with external power supply and terminating resistor that can be inserted via the switch. HT GC5xx

	2nd Serial port selectable RS232/RS485 and terminating resistor insertable through the switch J1939 and MTU engine CAN-BUS PMCBUS proprietary CAN-BUS Both of them with integrated galvanic isolation and supply
Display	LCD transflective graphic, LED backlight, 128x64mm size, resolution 70x38
Degree of protection	EXTERNAL IP 55 with gasket INTERNAL IP 20
Operating conditions	From -25°C to +70°C
Storage Temperature	From -30°C to +80°C
Size	247(L)x187(H)x70(P) mm
Weight	825 g HT GC310 1080 g HT GC350 / HT GC5xx

5. Connections

5.1 Common connections for all devices

5.1.2 Functional earth JC

The connection to the functional earth JC is mandatory, to guarantee the proper operation of the device and compliance with the EU Electromagnetic Compatibility Directive.

The connection is functional and not protective; the cross-section of the wire can therefore be smaller.

Connect the other end of the wire to a metal screw of the electrical panel (which must be grounded) next to the **JC** or to a grounding line, using, in any case, the shortest cable possible.

5.1.3 Device JB supply

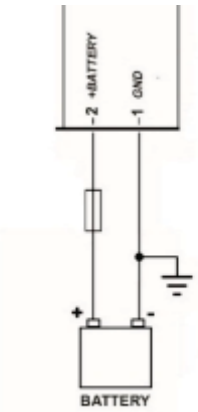

The **JB** connector is the supply connector: connect an uninterruptible power supply (usually the engine starter battery) to the **1-GND** terminal (minus) and to the **2-+BATT** terminal. (plus).

The minus terminal **1-(GND)** is the reference and the common return of the digital inputs, of the outputs and of the current and voltage measurements. **It must be connected to the protective earth .** Systems requiring isolation between battery minus and protective earth are nonetheless usable, but they may generate operating problems and could require special precautions, such as the use of insulating voltage transformers for the Mains and Generator voltage measurements.

Although the device is protected by a built-in self-resetting fuse, it is recommended that you use a fuse for the protection of the positive line **2-+BATT**. of supply.

The device automatically recognizes when it is powered if the generator set battery nominal voltage is 12 or 24V for managing the related logics and alarms. The recognition also takes place every time you switch to mode **OFF/RESET**.

NOTE: connect the positive voltage only after the connections are all established. Before connect the positive voltage, open all the panel.

5.1.4 Connection to the public grid (or to common bus for HT GC500 and HT GC500*Plus* only) JF

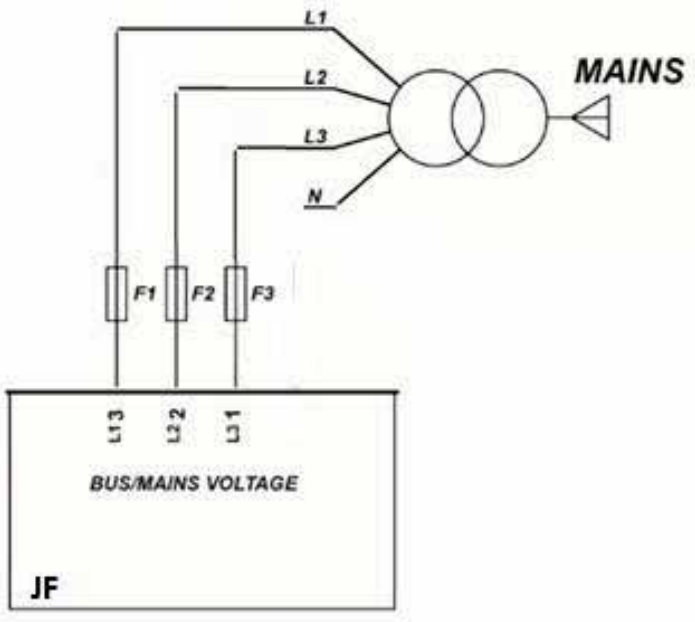

The connection to the public electric grid or common bus is made through the connector JF of the card.

Tri-phase connection:

- Connect phase L1 (or R) to terminal 3 of JF connector.
- Connect phase L2 (or S) to terminal 2 of JF connector.
- Connect phase L3 (or T) to terminal 1 of JF connector.
- No neutral connection is available

Single-phase connection

- Connect phase (L) to terminal 3 of JF connector.
- Connect neutral (N) to terminal 2 of JF connector.
- **Terminal 1 of JF connector must be let unconnected.**

Parameters P.0119 allows to select the tri-phase/single-phase mode.

For CAT.IV application, the max applicable voltage is 300 Vac (phase-to-neutral) and 520 Vac (phase-to-phase). Maximum voltage to ground is 300 Vac.

For CAT.III application, the max applicable voltage is 345 Vac (phase-to-neutral) and 600 Vac (phase-to-phase). Maximum voltage to ground is 600 Vac.

If working voltages are greater than these values, step-down transformer must be used in order to respect the specified limits. Nominal voltages on primary and secondary side of the voltage transformer are configurable by means P.0117 and P.0118. Voltage transformers having a nominal voltage of 400V on the secondary side are the solution that preserves the best available measurement precision of the board.

It is optionally possible to order a version of the device with max 100Vac (phase-phase) voltage inputs to be used with TV with 100V secondary ones. In this case P.152 parameter should be configured for 100V working.

Beware!: do not connect devices provided with optional 100V max inputs directly to mains or to 400V bus not to damage the device.

5.1.5 Connection to the generator JE

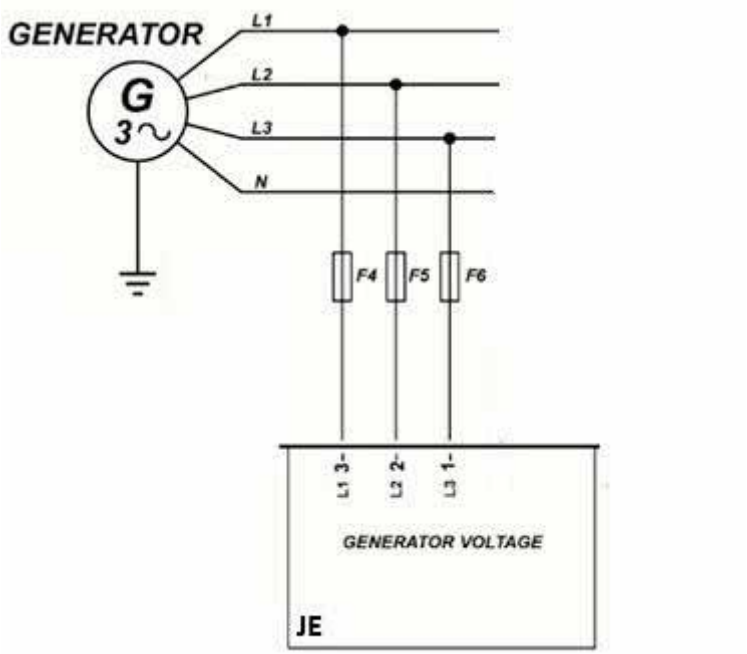

It is required to install an external over current protection for each phase of the generator connected to the device. The input impedance of grid input of the board, under normal operation condition, is greater than 1 Mohm. A 1 A protection threshold is adequate.

The connection to the public electric grid is made through the connector JE of the card.

Tri-phase connection:

- Connect phase L1 to terminal 3 of JE connector.
- Connect phase L2 to terminal 2 of JE connector.
- Connect phase L3 to terminal 1 of JE connector.
- No neutral connection is available

Single-phase connection

- Connect phase (L) to terminal 3 of JE connector.
- Connect neutral (N) to terminal 2 of JE connector.
- **Terminal 1 of JE connector must be let unconnected.**

Parameters P.0101 allows to select the tri-phase/single-phase mode.

For CAT.IV application, the max applicable voltage is 300 Vac (phase-to-neutral) and 520 Vac (phase-to-phase). Maximum voltage to ground is 300 Vac.

For CAT.III application, the max applicable voltage is 345 Vac (phase-to-neutral) and 600 Vac (phase-to-phase). Maximum voltage to ground is 600 Vac.

If working voltages are greater than these values, step-down transformer must be used in order to respect the specified limits. Nominal voltages on primary and secondary side of the voltage transformer are configurable by means P.0103 and P.0104. Voltage transformers having a nominal voltage of 400V on the secondary side are the solution that preserves the best available measurement precision of the board.

It is optionally possible to order a version of the device with max 100Vac (phase-phase) voltage inputs to be used with TV with 100V secondary ones. In this case it is necessary to configure P.151 parameter for 100V working.

Beware!: do not connect devices provided with optional 100V max inputs directly to 400V generator voltage not to damage the device.

5.1.6 Voltmeter transformers Aron insertion o

Both for the generator voltage measurement input and for mains/BUS voltage measurement input it is possible to use voltage transformers Aron insertion; this allows using only two transformers instead of three. The connection is possible both on 100Vac and 400Vac inputs.

Aron connection main scheme, both for the generator and for mains/BUS, is the following:

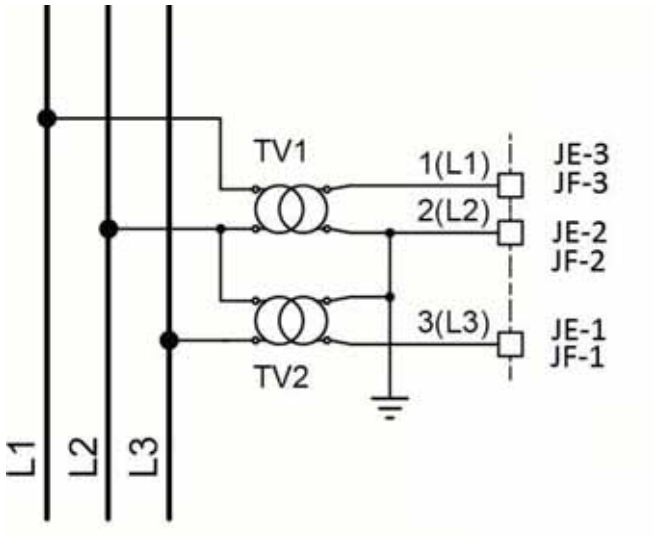

5.1.7 Current transformer connection (CT) JD.

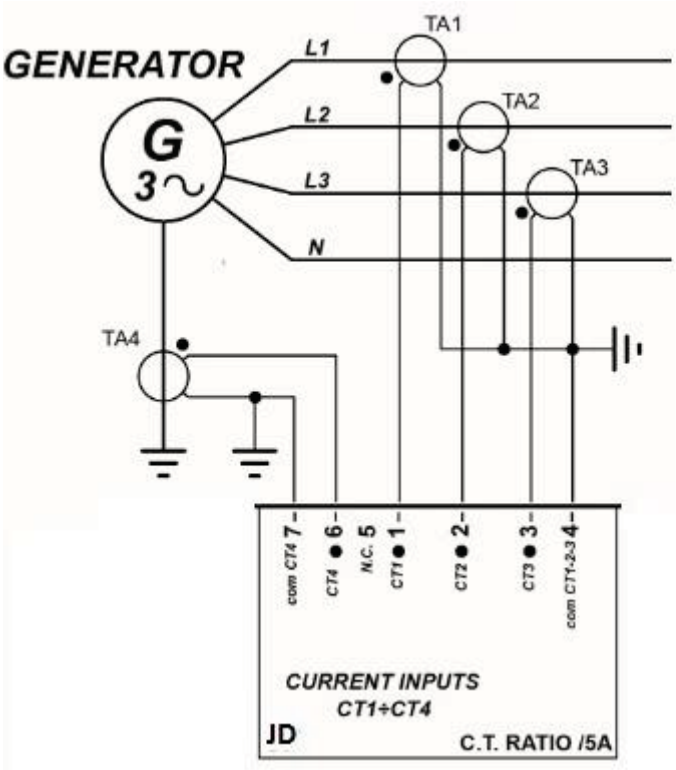

The currents measure must be 0 exclusively by means of current transformers (CTs). **Do not connect mains voltage conductors to JD.**

Voltage transformers having a nominal voltage of approximately 5 Ac on the secondary side are the solution that preserves the best available measurement precision of the controller board. Any current measurement needs a power of about 1VA; however, CTs of 3-5VA are recommended, to compensate for leaks along the connection cables.

The maximum current that the device can measure directly is of 5.4Ac, beyond which the measurement circuit gets saturated. The controller board is still able to measure, but with gradually decreasing precision, down to about 15 Ac **solely for transient situations** , such as measuring overcurrents or short circuit currents on the system, using an algorithm to compensate for the saturation of the measurement circuits.

The CTs for the measurement of the three currents have only one terminal clip for the return current, i.e. the JD-4 ; the fourth auxiliary current has a return separated from the other three through the JD-7 terminal clip.

The measurement is carried out by shunt.

IMPORTANT: returns of all TAs (JF-7 auxiliary one included) should be connected to the negative supply (JB-1GND) of the device as well.

If the CTs must be connected to other devices in addition to the HT GCxxx, then the HT GCxxx must be the last in the series. For acquiring the currents of the three phases of the generator, the JD connector is used:

- Connect to terminal JD-1 one terminal of the phase L1 C.T.
- Connect to terminal JD-2 one terminal of the phase L2 C.T.
- Connect to terminal JD-3 one terminal of the phase L3 C.T.

- Connect to terminal JD-4 a common connection of the remaining terminals of C.T.s

Returns of all of the three TAs should be also connected to the negative of the generator starter battery.

For single phase connection, terminals JD-2 and JD-3 should not be connected.

Using the P.0124 parameter you can define whether the CTs on the three phases are positioned on the generator (as shown in the drawing above) or on the load, so as to measure also the power absorbed by the mains. This also has an effect on the operation sequence and the display of symbols and currents and power/energy measures that appear on the menu M.xx.

5.1.8 Auxiliary current.

HT GCxxx allows to acquire a fourth measure of current, usable for example for a differential protection. By default, the fourth measure is not used.

The board is configured for the connection of a current transformer (C.T.) for the measure of the current: if it is required to use a toroid (instead of a C.T.) it is necessary to ask for the special option in phase of order (E6202111000XX).

Up to 01.11 version of the software, P.0109 parameter could be set on “0-Not used” and “1-Used”. From 01.12 version of the software on, P.0109 parameter allows selecting the type of auxiliary current to be used as well: “1-CT” and “2-Toroid”

5.1.8.1 Using a CT

Use a transformer that, with the maximum measurable current, supplies about 5 Ac on the secondary (in order not to reduce the precision of the board). The maximum measure current on the primary side is about 5.4 Ac (depending on the toroid ratio), beyond this value the circuit saturates. If the CTs must be connected to other devices in addition to the HT GCxxx, then the HT GCxxx must be the last in the series.

- Connect to the terminal JD-6 one terminal of CT
- Connect to the terminal JD-7 the connection return of CT

The CT return terminal must be also connected to the negative voltage of the supply and cranking battery.

From 01.28 version of the software, it is possible to configure a TA for auxiliary current reading both on the Generator and Users, but also on Mains. The parameter to be set is P.0130 “Connection of the auxiliary current”; it defines where the auxiliary current is measured: Only with HT GC5xx other two parameters are available:

0- On the generator
1- On the loads
2- On the mains.

Only with **HT GC5xx** other two parameters are available: P.0131 “Use of auxiliary current” and P.0132 “Adjustment for the calculation of power on mains”. These two parameters allow, respectively, to measure the power on the mains and to introduce a corrective factor on current reading, in case of three-phase three current imbalance.

5.1.8.2 Using a TOROID for auxiliary current (only from software version 01.12)

On HT GCxxx boards provided of an appropriate option it is possible to use a toroid for the measure of the current to be measured. The maximum measure current on the primary side is about 40 Ac (depending on the toroid ratio), beyond this value the circuit saturates.

In this case, P.0108 defines the winding ratio of the toroid (not the primary nominal current).

Activation threshold (Ampere) and trip delay (set in seconds) should be set by means P.0637 and P.0638.

Protection will be activated if the measured current is greater than P.0367 threshold for more than P.0368 seconds.

Protection is enabled only if engine is running and can be disabled also by means a digital input configured with the function “69”.

Toroid should be configured in the following way:

- Connect JD-6 to the main toroid terminal
- Connect JD-7 to the toroid return terminal.

The Toroid (JD-7) return terminal must be also connected to the negative voltage of the supply and cranking battery.

5.1.9 Engine connection JH

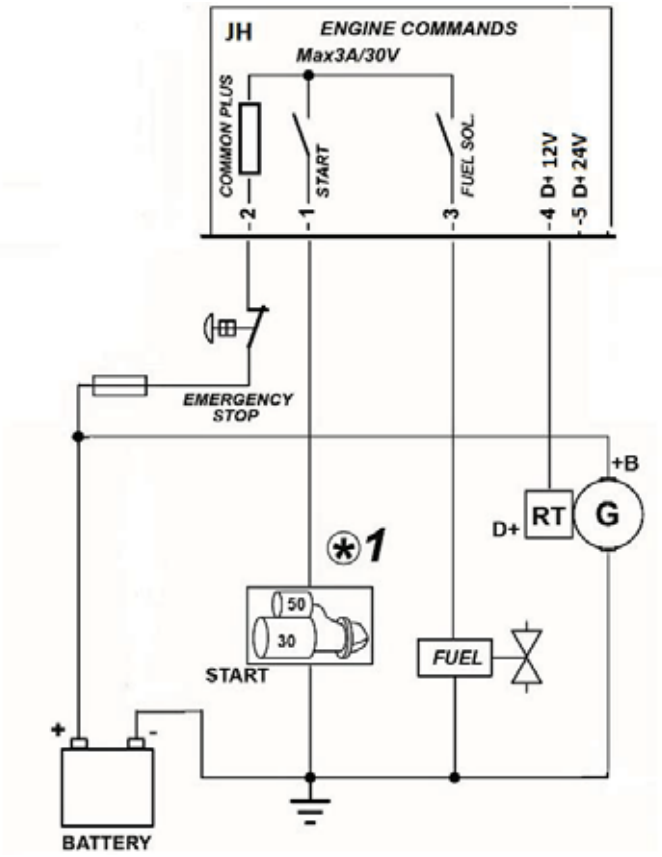

JH connector is configured, by default, for connections to starting motor (START), electromagnetic valve (FUEL SOLENOID); and for working excitation/control outputs of battery charge alternator (+D 12V and +D24V). START output, when not used to control the engine (for example with CAN-BUS engines), can be configured through the parameter for other aims.

5.1.9.1 JH-2 COMMON PLUS Common positive

Positive input mutual to START and FUEL outputs, internally protected by self-resetting fuse. An external fuse of adequate capacity can be also added. It should be connected to starting battery positive by means of an emergency button contact; that is, this connection should be interrupted when emergency button pushed.

⚠ BEWARE!: that's not true for systems with stopping in excitation.

Several emergency buttons may be used by series connecting them to each other. Usually JH-2 clamp is also connected to a digital input configured through DIF.0028 function – "Emergency stop" (by default it is JN-3 input) for the triggering of "A048 - Emergency stop" alarm when the button is pushed.

⚠ ***Caution: do not use the terminal as common minus for the two relay outputs.*** Within the outputs there are damper diodes for opening overvoltages that would be conducted and immediately damaged.

5.1.9.2 JH-1 START Command for the engine starter motor

Positive relay output, with maximum capacity of 3A @30VDC. Integrated internal diode for damping opening overvoltages. This terminal shows the battery voltage present on connector JH-2; although one is already present inside, with particularly inductive loads (remote control switches, electromagnets, etc.) it is advisable to use a damper diode for opening overvoltages. For currents above the rated use an external relaunch relay.

The controller activates this command when motor start is required and deactivates it automatically within 200-300ms from the instant when it recognizes the motor started state.

If this command is not necessary (for example with CAN-BUS interface engines), the output can be configured for other purposes by means of the parameter P.0585 , refer to par. 7.6 and [1].

5.1.9.3 JH-3 FUEL SOLENOID Fuel solenoid command

Positive relay output, with a capacity of 3A @30VDC. Integrated internal diode for damping opening overvoltages. This terminal shows the battery voltage present on connector JH-2; although one is already present inside, with particularly inductive loads (remote control switches, electromagnets, etc.) it is advisable to use a damper diode for opening overvoltages.

For currents above the rated use an external relaunch relay.

The output is configured by default to control the fuel shut-off electromagnetic valve for systems with stopping in excitation (see below). It is not possible to assign other functions to it.

Two different ways to stop the engine are implemented in HT GCxxx controllers.

Drop-down stop system

With this system (most widely used and default configuration) the engine is started by delivering power to the solenoid valve, which opens/closes the fuel flow and is turned off by cutting the power.

So the controller activates the JH-3 FUEL SOLENOID outlet prior to starting the engine (at least a delay of 200 ms is provided between the activation of this command and the activation of the command for the starter motor). It deactivates it when the motor must be turned off. If the engine is stopped by other means, it is possible to delay the deactivation of this command through parameter P.0234.

Pick-up stop system

This system is used when the engine requires an explicit command to stop. It is mainly used for safety reasons, to avoid possible engine stops due to electrical faults: in fact, when stopping in de-energization, if you detach, by mistake, the cable connected to JH-3 terminal, the engine stops. Instead, in case of shut-off while energizing, the engine does not stop until it receives the explicit arrest command.

By default, the positive auxiliary output **JI-1** is configured for the command of arrest during energizing. It is possible to configure any other output (see par. 7.6 and [1] or [2]).

⚠ **WARNING!** The series connection of the emergency stop button to terminal JH-2 DOES NOT WORK WITH SYSTEMS OF ARREST DURING ENERGIZING because you would get the opposite effect, i.e. cutting the power to the stop valve.

For these systems, in case it is necessary to assure the functionality of the emergency button, not considering the working of the HT GCxxx device, the button should have a double contact: a NC connected in series to JH-3 (in case, with JH-3 connected also to the input configured as DIF.0028 – "Emergency stop" to cause A048 shutdown), as already seen to cut off the supply to the starting motor, and a NO between the positive of the battery and the valve/stop control without intermediate fuses, that, when activated, supplies positive voltage to the cut-off valve, by by-passing HT GCxxx control.

5.1.9.4 JH-4 and JH-5 +D Excitation and working of the charge alternator

When the board starts the engine, JH-4 and JH-5 clamps (to be connected according to the engine working voltage) supply the current needed for the excitation of the battery recharge alternator.

With stationary engine and alternator, the alternator +D terminal is practically a short circuit to the battery minus and the voltage at its ends is close to 0V. During and after engine starting, as well as under normal operating conditions, with the revolution of the recharge alternator, the +D voltage rises up to the value of the battery voltage. When the engine stops, or even if only the recharge alternator stops because of the breakage of the drive belt, the +D voltage returns to 0V. The same thing happens in case of malfunction of the alternator.

The power delivered with the alternator stationary is limited internally and is 280mA for 12V systems and 135mA for 24V systems.

- If the battery is a 12VDC type, connect the D+ signal of the battery charger alternator to the terminal JH-4, leaving unconnected the terminal JH-5.
- If the battery is a 24VDC type, connect the D+ signal of the battery charger alternator to the terminal JH-5, leaving unconnected the terminal JH-4.

The excitation control is activated in correspondence with JH-3 fuel electromagnetic valve control at engine starting.

The measurement of the voltage level (high or low) of +D is used by the device for two purposes:

- Engine running/stop detection
- Usually the recharge alternator is driven by the drive shaft through a drive belt. Normally, the drive belt also drives other mechanical components of the engine, for example the cooling fan of the radiator. If during engine operation the +D voltage of the recharge alternator drops below 0V or if it does not rise after start, once the P.0349 time is up, it is assumed that the belt is broken or at least that there is a malfunction and the device activates an anomaly that can be configured with the parameter P.0357 (as warning, deactivation or lock) to protect the engine from the lack of operation of the mechanical parts driven by the belt.

By using P.0115 parameter it is possible to enable/disable the two previous functions individually; by default the two functions are disabled.

5.1.10 Speed measurement (PICK-UP or W) JL-1, JL-2 and JL- 3

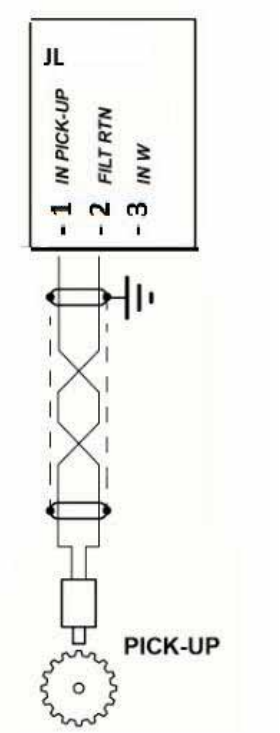

To measure the engine rotational speed you can use a magnetic pick-up placed on the fly-wheel, or use the W speed signal on the battery recharge alternator. The connection must be made with a shielded cable, with grounded shield.

In the case of engines equipped with digital control unit the rotational speed is measured directly via CAN-BUS.

Even if there is no measuring system available, the HT GCxxx can still calculate and show the rotational speed, from the generator frequency.

5.1.10.1 Magnetic pick-up

You can use either two ground insulated wires pick-up, or a one-wire pick-up with the thread screwed onto the grounded engine (GND), which is the return connection for the signal; the two-wire isolated pick-up is however recommended.

The signal is sinusoidal; the frequency depends on the rotational speed of the engine and on the number of teeth of the flywheel.

The minimum input voltage with the fully operative engine is about 1.25Vac at a frequency of 3kHz; in case the voltage is lower, the signal can be increased by screwing the pick-up so to near it to the cogged wheel, but taking the utmost care in order that it doesn't strike the cogged wheel during the flywheel rotation.

Connections:

JL-1 pick-up signal positive input

JL-2 pick-up signal negative input

With a single-wire pick-up, connect only **JL-3** (the connection to the battery negative is guaranteed by the contact of the sensor body onto the engine housing).

Usually, you can use a single pick-up, connected either to a HT GCxxx or to another device, such as a speed regulator, but paying attention to the polarity of the connections. Check also that the signal amplitude is sufficient.

The number of teeth of the flywheel must be set in the P.0110 parameters; by entering 0, the pick-up measurement is disabled.

5.1.10.2 W signal

Some battery charger alternators make available a “W” terminal that has an alternate voltage with a frequency proportional to the rotation speed of the battery charger. The W signal is generated inside the engine start battery recharge alternator. It is a square wave, with an amplitude ranging from 0V to Vbatt and a frequency proportional to the engine speed, but depending on how the alternator is built and on the ratio between the diameters of the pulleys onto which the driving belt runs.

In order to use the W signal, it is required:

- Connect the W signal of the battery charger alternator to the terminal **JL-3**.
- Connect terminal **JL-1** to terminal **JL-3**.

As already mentioned, the W signal frequency is proportional to the speed of the battery charger alternator, not to the engine speed: in fact, between the two speeds there is the speed reducing ratio of the belt pulleys. So it is necessary to set a numeric ratio (P.0111 parameter) that allows the board to convert the W signal frequency (proportional to revolutions per second of the battery charger alternator) into engine **rpm**. This ratio depends on many factors and it is not easy to calculate. If a frequency meter is available, simply start the engine (it will run at is rated and known speed, i.e. 1500 rpm) and measure the W signal frequency, and then calculate the ratio. If a frequency meter is not available, the following method can be used:

- Set a random value for P.0111 (e.g. 15).
- Start the engine and, when at operating speed, note the rpm value shown by the controller.
- Calculate the ratio between the displayed speed and the actual engine speed (displayed/actual).
- Multiply the value previously set in P.0111 by this ratio and set the new value.

Restarting the engine the speed measure should be close to the actual speed. Then, manually adjust the value P.0111 until you get the right display, considering that, for the same true speed, the value displayed by the controller decreases when increasing P.0111. To determine the engine speed, the generator frequency can also be used.

Leave P.0111 to 0 if W signal is not used.

NOTE: if W signal is used, set P.0110 to zero.

5.1.10.3 Revolutions measurement from frequency

If pick-up, W and can-bus are not available, it is possible to calculate the engine speed from the frequency of the generator. These two measures, in fact, are related by a fixed ratio, depending only by the number of poles of the alternator. On normal four poles alternators, this ratio (rpm) is 30 (engine speed is 30 times higher then alternator frequency). To use this feature, the following settings are needed:

- Set P.0110 to 0 (disables pick-up).
- Set P.0111 to 0 (disables W).
- Set P.0127 to the right ratio.

5.1.11 Analogue resistive sensors (JM -1, JM-2, JM-3, JM-4)

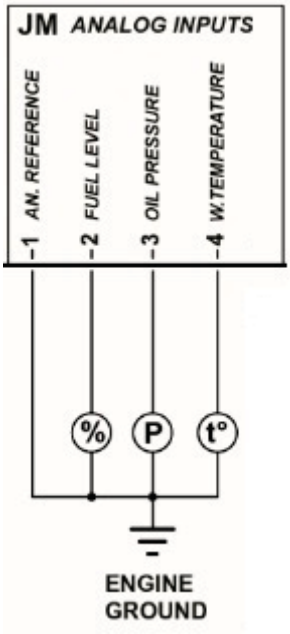

The device has three inputs arranged for the connection to JM-2, JM-3, JM-4 resistive type sensors); besides, there is also an input for the measurement of their common earth potential, JM-1.

With engines equipped with digital control unit, these data are normally acquired directly via CAN-BUS; sometimes it may be necessary to use and configure the resistive level sensor. Anyway, if you connect and configure one or more sensors, the displayed pressure measure will be the one of the sensor and not the one received from the engine.

For all these measures you can choose standard sensors with the most common resistance values directly from the configuration parameters of each individual sensor by using the controller or, through the BoardPrg3 program, you can define known generic curves at least two couples of resistance points/value of the size to be measured, see par. 7.7.

You can also individually configure the three inputs JM-2, JM-3 and JM-4 as additional digital inputs that become active when connected to ground (GND). So these will be displayed in the configuration menu of the digital inputs and will be manageable exactly as the other inputs; see par. 7.5

Ohm values and measured voltages at terminals are displayed at S.12 page.

If one or more inputs are configured as digital inputs, their state is displayed on page S.08 (0= input not active, 1 = input active). The inputs not configured as digital are displayed with a dash.

5.1.11.1 Input JM-1 Analogue reference (Analog Reference)

It is not a real measure input: it is used only together with the three inputs for resistive sensors. Its purpose is to compensate for the lack of equipotentiality between electric earthing of the device (GND terminal) and of the electric panel and electric earthing of the gen-set, usually generated by the voltage drop on the connection cables; particularly, this happens when the connections between electric panel and engine are long and when there is a power flow in the battery minus and earthing connections, for example due to the presence of the battery recharge device inside the electric panel.

The system is able to efficiently compensate for both positive and negative potentials, ranging between -0.5VDC and +2.5VDC, with sensors resistance values of 100 ohm. The range of compensation increases for lower resistance values and decreases for higher values of resistance, being optimized for the resistance values of the sensors in normal operating conditions of the system.

The measure of the voltage with respect to the GND terminal is displayed on page S.12, under item JM-1; the measuring range of the system, and therefore the value indicated, can be higher than the one useful for compensation, mentioned above.

The input measures the potential of the common ground point (negative) of the resistive sensors, which for the sensors mounted on the engine is represented directly by the engine itself or the chassis of the gen-set; JM-1 can therefore be connected to a grounding system or to a bolt on the engine.

If the minus of one or several sensors is isolated from the engine or the gen-set chassis, for example in the case of floats for fuel level measurement mounted on the plastic tanks or electrically separated from the gen-set, you need to connect the JM-1 to the return of the sensor and also to the negative electric mass of the engine or to the negative limit of the starting battery.

Note: this connection should be made using a dedicated wire having the shortest possible length. Avoid to make the wire lies near high power and high voltage cable.

5.1.11.2 Input JM-4 Coolant Temperature (CT Coolant Temperature)

The input has two different usable measurement fields that can be selected by means of S2 switch between “WAKE” and VDO” positions:

- VDO selection: measuring range 0..400 ohm
- WAKE selection: measuring range 0..2800 ohm

The board supports the measurement of engine coolant temperature by means of different types of resistive sensors; it is also possible to use the input as a further digital input. The selection takes place by means of P.0113 parameter; the input can be set as:

- 0 – “Not used”
- 1 – “VDO 120°C” (51.2 Ohm @ 90 °C, SW2 on VDO)
- 2 – “WAKE (for IVECO-AIFO-FPT, SW2 engines on WAKE)
- 6 – “BERU” (0-2800 Ohm, SW2 on WAKE)
- 7 – “VDO 150°C” (36.5 Ohm @ 120 °C, SW2 on VDO)
- 20 – “General-purpose sensors 0..400 ohm” (SW2 on VDO), from FW 01.13
- 21 – “General-purpose sensors 0..2800 ohm” (SW2 on WAKE), from FW 01.13
- 99 – “Digital input”

The utilization of AIF.0020– “General purpose 0..400 ohm” function and AIF.0021– “General purpose 0..2800 ohm” function provides for the recourse to the conversion curve, see par. 7.7

For utilization as 99 –“Digital input” see par. 7.5

5.1.11.3 JM-3 input oil pressure (OP Oil Pressure).

The input has a useful resistance measurement field ranging between 0 and 400 ohm;

It can be configured by means of P.0112 parameter for the functions:

- 0 – “Not used”
- 1 – “VDO 10 Bar “ (0-180 Ohm).
- 2 – “WAKE” (0-300 Ohm)
- 3 – “VDO 5 Bar “ (0-180 Ohm).

- 20 – “General-purpose sensors (bar) (0..300ohm, from FW 01.13)
- 99 – “Digital input”

Since 01.13 review of the software 20 - "Generic sensor" 0 .. 300 Ohm function is manageable as well; its use provides for the use of conversion curves, see par. 7.7

For utilization as 99 - “Digital input” see par. 7.5

5.1.11.4 Input JM-2 Fuel Level (FL, Fuel Level)

The controller is able to manage resistive fuel level sensor having a maximum resistance value of about 400 ohm.

If there are sensors with higher resistances, it will be possible to connect resistors in parallel with the sensor to bring back the sensor resistance within ranges supported by the board. But the result is that the correspondence of the resistance value is no more linear with the position of the float.

The input can be configured through P.0114 parameter as:

- 0 – “Not used”
- 1 – “Standard VDO” (0..180 ohm)
- 20 – “General-purpose sensor 0..400 ohm” from FW 01.13

Since 01.13 review of the software 20 - "Generic sensor" 0 .. 400 Ohm function is manageable as well; its use provides for the use of conversion curves, see par. 7.7

It is possible to adapt sensor and tank (that can has different conformations) by directly acting on the float and the device through an appropriate special procedure detailed at chapter 9.

- Connect terminal JO-2 to terminal CAN_H of the engine's control unit.
- Connect terminal JO-4 to terminal CAN_L of the engine's control unit.
- Connect the shielding mesh of the shielded cable to the protective earth or to signal on both sides make sure that interior, panel and the engine frame are kept at the same potential). **Do not connect the screen to JO-3 terminal.**

The CAN-BUS connection needs a 120Ohm termination resistor on both ends of the cable. Normally, the control units of the engine have the termination resistor built-in (if not, connect the resistor directly on the CAN_H and CAN_L terminals of the control unit). On HT GCxxx side, by pulling out JO connector, it is possible to access a lever selector (“S1”) that allows activating/deactivating a 120-Ohm terminating resistance (see serigraph on the board back).

NB: the resistance should always be activated, unless the connection goes on towards other devices.

Use the parameters from menu 7 (in particular parameters P.0700 and P.0703) to indicate to the controller board the type of engine with which it must interact and the functions that must be managed.

HT GC5xx board uses a self-powered CAN-BUS interface, so the connection of JO-1 and JO-5 terminals isn't necessary.

5.1.12 JN digital inputs

There are 8 digital inputs, galvanic insulated through opto isolators. To activate an input, it is necessary to connect the relevant terminal to the supplying negative of the board (JB-1 GND). When left floating, the input brings itself to +Vbatt. Avoid situations where intermediate or undefined voltage levels can occur.

The same command signal of an input can be shared by several different devices (for instance one signal that goes to two HT GCxxx). In this case it is recommended to separate the inputs with diodes, as shown in the figure below. This is to prevent the false activation of the input when one of the devices is being turned off .

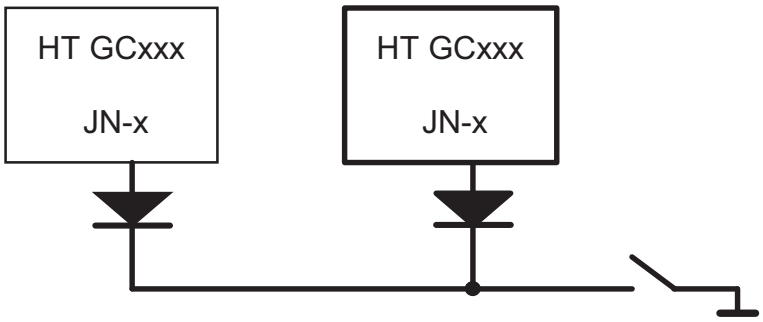

The eight inputs are wholly configurable (see par. 7.5):

As default, all the inputs JN are “active” only when the related terminal is connected to the negative of the supply voltage of the board; they are considered “not active” when the terminal is left open. **The logic state of the input can be reversed with respect to the physical state by ticking the “Reversed polarity” box on the input configuration page on BoardPrg3.** The box is only visible if the function selected is other than DIF.0000 – “Unused”.

It is possible to invert the logic status of the single inputs also by acting on P.0501 parameter.

For details about the digital inputs configuration, see 7.5

HT GC310/HT GC350

Terminal	Function
JN-1	**DIF.0016 – Maximum coolant temperature**
JN-2	**DIF.0013 – Minimum oil pressure**
JN-3	**DIF.0028 – Emergency stop**
JN-4	**Minimum coolant level ((DIF.0003-Auxiliary alarm + dedicated text message)**
JN-5	**DIF.0003 - Auxiliary alarm (block)**
JN-6	**DIF.0001 - Auxiliary warning**
JN-7	**DIF.0009 – Low fuel level**
JN-8	**DIF.0040 – Inhibition**

HT GC5xx

Terminal	Function
JN-1	**DIF.0007 – Generator circuit breaker (GCB) status**
JN-2	**DIF.0006 – Generator circuit breaker (GCB) status**
JN-3	**DIF.0028 – Emergency stop**
JN-4	**DIF.0039 – Parallel to the mains protections status**
JN-5	**DIF.0050 – Absence of voltage on the parallel bars.**
JN-6	**DIF.0017 – Overload**
JN-7	**DIF.0009 – Low fuel level**
JN-8	**DIF.0040 – Inhibition**

It is possible to configure one or more of the three analogue inputs (JM connector, terminals 2, 3, 4) as further digital inputs (see par. 7.5). When an input is configured to work as a digital one, the relevant analogue measure will get lost.

5.1.13 JI relay digital outputs

There are four digital relay outputs internally protected from overcurrent, approachable through JI connector.

When the outputs are working, the relays bring, on the relevant output terminal, the **positive** voltage supplied to JI-5 terminal. Opening power-surge damper diodes are present internally.

Beware!: Just a positive voltage can be connected to the common JI-5 clamp. DO NOT CONNECT JI-5 TO GND OR A.C.VOLTAGES. Do not exceed limits for currents and voltage indicated in the table below.

The outputs are divided into two couples with different current capacity:

JI-1 AUX OUT 1	**MAX 3A @ 30VDC**
JI-2 AUX OUT 2	
JI-3 AUX OUT 1	**MAX 1A @ 30VDC**
JI-4 AUX OUT 2	

Each couple is protected by an internal self-resetting fuse.

The four outputs are independent and wholly configurable (see par. 7.6).

The status of each output relay can be inverted with reference to the logic status by selecting the "Reversed polarity" box in the configuration page of the output on BoardPrg3. Anyway it is possible to invert statuses, for each output, through P.0580 parameter .

For the configuration of the outputs and their parameters, see par. 7.6.

The tables that follows detail factory default configurations:

HT GC310/HT GC350

Terminal	Function
JI-1	**DOF.1016 – "Command of arrest when energized"**
JI-2	**DOF.0021 – "Outside beeper"**
JI-3	**DOF.0000 – "Not used"**
JI-4	**DOF.0000 – "Not used"**

HT GC5xx

Terminal	Function
JI-1	**DOF.1016 – "Command of arrest when energized"**
JI-2	**DOF.0021 – "Outside beeper"**
JI-3	**DOF.0000 – "Not used"**
JI-4	**DOF.0030 – Enable GCB minimum voltage coil. (HT GC5xx.)**

.

5.1.14 Outputs for JG loads change-over command

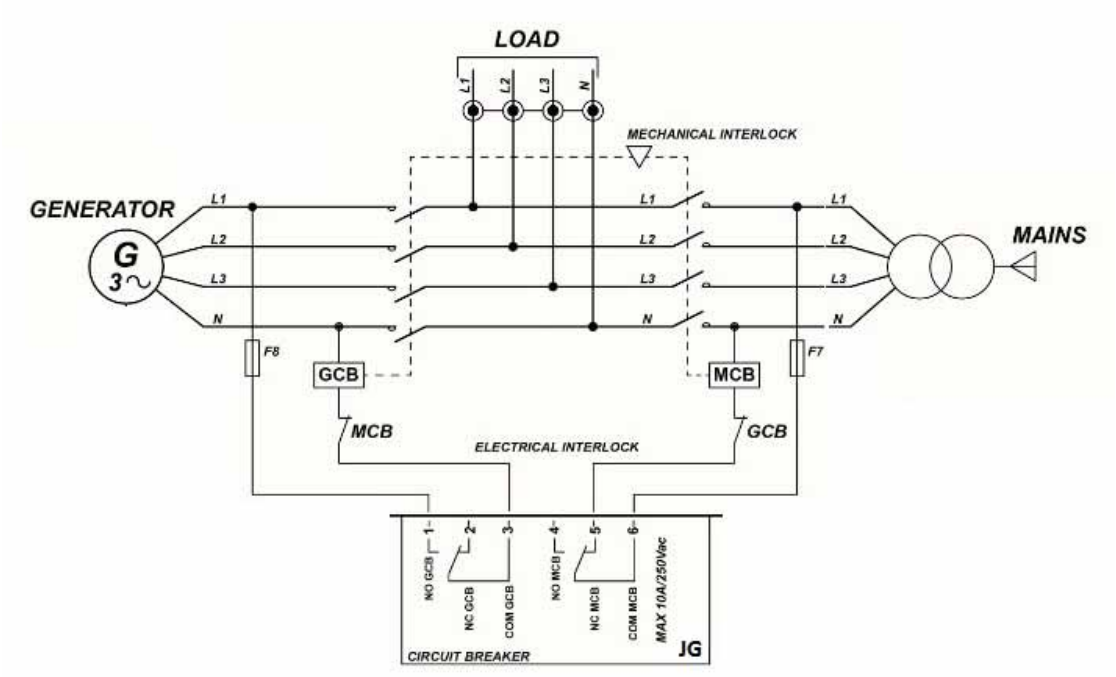

The controller uses two 10A@250Vac dry contact relays for controlling loads change-over.

The two switching relays are named KG and KM on HT GC310/HT GC350 and GCB and MCB on HT GC5xx. From now on we will refer to them as GCB and MCB.

Terminal	Function
JG-1	Normally open contact, of the GCB relay.
JG-2	Normally closed contact, of the GCB relay.
JG-3	Common contact of the GCB relay.
JG-4	Normally open contact, of the MCB relay.
JG-5	Normally closed contact, of the MCB relay.
JG-6	Common contact of the MCB relay.

The GCB command is used to connect the loads to the generator. The MCB command is used to connect the loads to the mains.

You must use the normally closed contact of the MCB and the normally opened contact of the GCB : that way, even if the controller is not powered, the loads remain still connected to the mains.

Three different systems can be used to change-over the loads:

- SWITCH (SIRCOVER): with only one command, the loads are changed-over to the mains or to the generator. Use the JG-01 and JG-03 terminals to control the SIRCOVER: that way, with the controller unpowered, the loads are automatically changed-over to the mains. The MCB output (terminals 4... 6 of the JG) is not used, therefore it can be associated to a different function. Configure parameter P.0220 with the time the SIRCOVER needs for the changeover: that way the controller avoids reversing the command before the changeover is completed (operation that risks blocking the SIRCOVER). Instead, reset the P.0219 parameter, because the pause between mains and gen-set and vice-versa is ensured by the SIRCOVER.

- Two separate breakers (preferably interlocked mechanically and electrically). The command for the breaker connecting the loads to the generator (GCB) must be taken between terminals 1 and 3 of the JI connector. That way, with the controller unpowered, the contact opens and the GCB breaker disconnects the generator from the loads. The command for the breaker connecting the loads to the mains (GCB)

must be taken between terminals 5 and 6 of the JG connector. That way, with the controller unpowered, the contact closes and the MCB breaker connects the loads from the power mains. Set P.0220 parameter on zero (the control can always be inverted immediately) and set at least P.0219 parameter to 2 seconds (to assure two-second pause during switching).

- One breaker (for manual gen-sets where the mains is missing). Use the JG-01 and JG-03 terminals to control the breaker: that way, with the controller unpowered, the loads are disconnected from the generator. Set to zero both parameter P.0220 and parameter P.0219

For output configuration, please, refer to par. 7.6.

If there is only one switch, the MCB output (terminals 4... 6 of the JG) is not used, therefore it can be associated to a different function (see par. 7.6).

The function of JG-1/2/3 output (GCB control) is not reconfigurable.

5.1.15 Serial port

JA connector can be used for the interfacing with external devices provided with RS232 interface. For the functions and protocols implemented, refer to document [8]. See par. 12.10

The diagram of the connector is:

- JA_01: not connected
- JA_02: RXD
- JA_03: TXD
- JA_04: DTR
- JA_05: GND
- JA_06: DSR
- JA_07: RTS
- JA_08: not connected
- JA_09: not connected

5.1.16 JO engine CAN-BUS connection.

Using engine equipped with ECU (Electronic Control Unit) and CAN-BUS interface, most of the previous detailed connections are no more required. With only one connection (CAN-BUS) the controller is able to start or stop the engine, as well as to control its speed, to make several measurements (such as running speed, coolant temperature and oil pressure) and to display the diagnose codes activated by the engine itself.

The same bus is also used for connecting to the optional modules DITHERM, DIGRIN, DIVIT, DITEL and DANOUT.

CAN-BUS connection is carried out by means connector JO. The pinout of the connector complies with CANopen standard. **NOTE: the connector has gold plated contacts and terminals, do not exchange it with other connectors.**

The CAN-BUS interface of the HT GCxxx is galvanically isolated.

HT GC5xx boards integrate internally the supplying for the galvanic isolation and any external supplying is not necessary.

The CAN-BUS connection of HT GC3XX boards needs to be supplied from outside with a voltage ranging from 7 to 32VDC:

- Connect JO-1 terminal to the battery positive, preferably with a dedicated cable that connects this terminal straight to the supplying positive clamp of the engine control unit.

- Connect JO-5 terminal to the battery negative clamp **directly on engine control unit**.

For the connections described below, use a type of cable suitable for the CAN-BUS (example HELUKABEL 800571). Connect cable shielding to an earthing close to the connector.

The CAN-BUS connection needs a 120Ohm termination resistor on both ends of the cable. Normally, the control units of the engine have the termination resistor built-in (if not, connect the resistor directly on the CAN_H and CAN_L terminals of the control unit).

In HT GCxxx the terminating resistor is integrated; for its activation it's necessary to move S1 switch on 120R ON position.

NOTE: the termination must be always enabled, unless the connection proceeds to other devices and the HT GCxxx is not one of the two ends.

Use the parameters from menu 7 (in particular parameters P.0700 and P.0703) to indicate to the controller board the type of engine with which it must interact and the functions that must be managed.

For further details about CAN-BUS connection, please refer to documents [12] and [13]. See par. 12.11

5.2 Additional connectors for HT GC350 / HT GC5xx

Besides to connectors available for HT GC310 board, HT GC350, HT GC500 and HT GC500^{Plus} boards have further connections for inputs, outputs and additional functions.

5.2.1 Additional digital inputs (JV, JU)

We suggest to separate inputs with diodes when two or more of them are connected in parallel between two different HT GCxxx control boards. This to avoid the wrong activation of the input when one of them is deactivated.

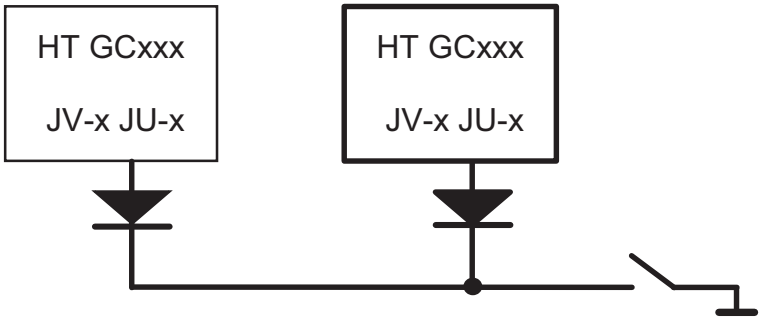

5.2.1.1 JV digital inputs (HT GC350/HT GC5xx)

They are a group of five additional opto-isolated digital inputs. It is possible to activate the inputs by connecting the terminal to the battery negative (in this case JV-6 common terminal should be connected to the battery positive); alternatively, it is possible to activate the inputs by connecting them to the battery positive (but in this case JV-6 common terminal should be connected to the battery negative).

The five inputs are wholly configurable (see par.7.5).

The logic state of the input can be reversed with respect to the physical state by ticking the "Reversed polarity" box on the input configuration page on BoardPrg3. The box is only visible if the function selected is other than DIF.0000 – "Unused".

It is possible to invert the logic status of single inputs also by acting on P.0531 parameter, to consider them active when the relevant terminal is open (reversed polarity).

Terminal	Function
JV-1	Input 9
JV-2	Input 10
JV-3	Input 11
JV-4	Input 12
JV-5	Input 13
JV-6	Common terminal for all inputs.

5.2.1.2 JU digital inputs (HT GC350/HT GC5xx)

They are a group of five additional opto-isolated digital inputs. It is possible to activate the inputs by connecting the terminal to the battery negative (in this case JU-6 common terminal should be connected to the battery positive); alternatively, it is possible to activate the inputs by connecting them to the battery positive (but in this case JU-6 common terminal should be connected to the battery negative).

The five inputs are wholly configurable (see par. 7.5).

The logic state of the input can be reversed with respect to the physical state by ticking the "Reversed polarity" box on the input configuration page on BoardPrg3. The box is only visible if the function selected is other than DIF.0000 – "Not used".

It is possible to invert the logic status of single inputs also by acting on P.0531 parameter, to consider them active when the relevant terminal is open (reversed polarity).

Terminal	Function
JU-1	Input 14
JU-2	Input 15
JU-3	Input 16
JU-4	Input 17
JU-5	Input 18
JU-6	Common terminal for all inputs.

5.2.2 Additional digital outputs (JT, JS, JR, JSB, JRB)

5.2.2.1 JS relay outputs (HT GC350/HT GC500)

Terminal	Function
JT-1	Normally open contact, of the 5 relay.
JT-2	Normally open contact, of the 6 relay.
JT-3	Normally open contact, of the 7 relay.
JT-4	Normally open contact, of the 8 relay.
JT-5	Normally open contact, of the 9 relay.
JT-6	Positive in common for all inputs

They are 5 relay outputs, with 1A@30VDC capacity and common positive clamp protected by an integrated self-resetting fuse. Also diodes for damping opening overvoltage are integrated.

When the outputs are working, the relays bring, on the relevant output terminal, the **positive** voltage supplied to JIT-6 terminal

Beware!: only a positive voltage can be connected to JT-6 common clamp. DO NOT CONNECT JT-6 TO GND OR TO ALTERNATE VOLTAGES. Do not exceed limits for currents and voltage.

The five outputs are wholly configurable.

The status of each output relay can be inverted with reference to the logic status by selecting the "Reversed polarity" box in the configuration page of the output on BoardPrg3. It is anyway possible for each output to invert the statuses via P.0589 parameter.

For the configuration of the outputs and their parameters, see par. 7.6.

5.2.2.2 JS relay outputs (HT GC350/HT GC500)

Terminal	Function
JS-1	Normally open contact, of the 10 relay.
JS-2	Common contact of the 10 relay.
JS-3	Normally open contact, of the 11 relay.
JS-4	Common contact of the 11 relay.
JS-5	Normally open contact, of the 12 relay.
JS-6	Common contact of the 12 relay.

They are three outputs created by means of three dry-contact relays with NO output and 1A@30VDC maximum capacity, each of them with integrated self-resetting fuse. There are no damping diodes for opening overvoltage, which for inductive loads should be added externally.

The three outputs are wholly configurable.

The status of each output relay can be inverted with reference to the logic status by selecting the "Reversed polarity" box in the configuration page of the output on BoardPrg3. It is anyway possible for each output to invert the statuses via P.0589 parameter.

For the configuration of the outputs and their parameters, see par. 7.6.

5.2.2.3 JR relay outputs (HT GC350/HT GC500)

Terminal	Function
JR-1	Common contact of the 13 relay.
JR-2	Normally closed contact, of the 13 relay.
JR-3	Normally open contact, of the 13 relay.
JR-4	Common contact of the 14 relay.
JR-5	Normally closed contact, of the 14 relay.
JR-6	Normally open contact, of the 14 relay.

They are two relay outputs with dry-changeover contacts, capacity 1A@30VDC, each of them with integrated self-resetting fuse. There are no damping diodes for opening overvoltage, which for inductive loads should be added externally.

The two outputs are wholly configurable .

The status of each output relay can be inverted with reference to the logic status by selecting the "Reversed polarity" box in the configuration page of the output on BoardPrg3. It is anyway possible for each output to invert the statuses via P.0589 parameter.

For the configuration of the outputs and their parameters, see par. 7.6

5.2.3 JSB static outputs (HT GC500 *Plus*)

Terminal	Function
JSB-1	Open drain output 5
JSB-2	Open drain output 6
JSB-3	Open drain output 7
JSB-4	Open drain output 8
JSB-5	Open drain output 9

They are 5 transistorized digital outputs, open-drain type. When the outputs are active, they connect the relevant clamps to GND (device-supplying negative), otherwise they are open-circuit. The maximum interruptable voltage is 30VDC.

Each output is able to absorb a maximum current (sink current) equal to 280mA/36V@50°c with a maximum overall absorption, for all static outputs, (JSB + JRB) of 1A. Open drain outputs are protected against overcurrent, overvoltage and overtemperature.

In case of intervention of one of these protections, the involved output disconnects; re-activation will take place only when the event that caused the intervention of the protection is removed.

The total current entering all active outputs flows from JB-1 GND negative supply terminal.

The five outputs are fully configurable (see par. 7.6).

The status of each output relay can be inverted with reference to the logic status by selecting the "Reversed polarity" box in the configuration page of the output on BoardPrg3. It is anyway possible for each output to invert the statuses via P.0589 parameter.

5.2.4 JRB relay and static outputs(HT GC500 *Plus*)

Terminal	Function
JRB-1	Open drain output 10
JRB-2	Open drain output 11
JRB-3	Open drain output 12
JRB-4	Normally open relay output 13.
JRB-5	Normally open relay output 14.

They are 5 digital outputs (3 open-drain outputs and 2 relay outputs); when outputs are active, they connect the relevant clamps to GND (device-supplying negative), otherwise they are open-circuit. The maximum interruptable voltage is 30VDC.

Each output is able to absorb a maximum current (sink current) equal to 280mA/36V@50°C with a maximum overall absorption, for all static outputs, (JSB + JRB) of 1A. Open drain outputs are protected against overcurrent, overvoltage and overtemperature. NO relay outputs are protected with self-resetting fuse. In case of intervention of one of these protections, the involved output is deactivated and will be reactivated only when the event that has caused the intervention of the protection has disappeared.

The total current entering all active outputs flows from JB-1 GND negative supply terminal.

The five outputs are fully configurable (see par. 7.6).

The status of each output relay can be inverted with reference to the logic status by selecting the "Reversed polarity" box in the configuration page of the output on BoardPrg3. It is anyway possible for each output to invert the statuses via P.0589 parameter.

5.2.5 JZ – Additional serial communication port

JZ allows to interface to the additional serial communication port.

Terminal	Function
JZ-1	RS232 RX – RS485 A
JZ-2	RS232 TX – RS485 B
JZ-3	GND
JZ-4	N.C.

This port can be used as RS232 or RS485 interface. Selector S5 on the rear panel allows to configure the operating mode. In case the RS485 mode is selected, switch S4 allows connect/disconnect the 120 ohm resistor for termination. **The serial interface is not galvanic insulated.**

For the functions and protocols implemented, refer to document [8]. See par. 12.10

5.3 Additional connectors for HT GC5xx

Besides connectors available for HT GC310 and HT GC350 boards, HT GC5xx board has further additional connections.

5.3.1 JP Interface PMCBUS (HT GC5xx)

PMCBUS is a SICES' proprietary protocol and it is used to interface with other SICES devices for the function of power and load distribution management. PMCBUS uses a CAN 2.0B interface working at 250 kbit/s.

The JP connector pinout complies with the CANopen standard. **NOTE: JO connector has gold plated contacts and terminals, do not exchange it with other connectors.**

Interface is insulated; please do not refer any terminals of this connector to the panel supply potential. Interface is self-powered, thus terminal JP-1 and JP-5 must be left unconnected.

Use adequate cables to obtain a steady communication (see par. 5.1.16) and insert terminating resistors properly. If HT GC5xx device is placed at the beginning or at the end of the communication line, use S3 selector on the rear panel to activate 120 ohm terminating resistor.

5.3.2 JQ – PWM signal outputs (HT GC5xx)

HT GC5xx has two outputs with PWM 0..5VDC@2500Hz signals, with default functions for the interfacing with analogue devices.

Terminal	Function
JQ-1	PWM1_NI_SPEED
JQ-2	PWM1_I_SPEED
JQ-3	N.C.
JQ-4	PWM2_NI_SPEED
JQ-5	PWM2_I_SPEED

PWM1 output is used to control a rpm regulator through an analogue interface, alternatively to the digital control carried out through CAN-BUS-J1939 interface. PWM2 output can be used for the connection to a voltage regulator (AVR), to control generator voltage and reactive power for parallel systems.

Beware!: these outputs cannot be directly connected to the regulators to be controlled.

A PWM-current converter is required for each output.

SICES PWM Converter E6102117100xx device has two PWM signal - current and/or voltage converter inside, it has galvanic insulation for the two outputs and for the PWM signal and it has been specifically designed for this application.

If a non-insulated converter is used, it should be placed in the same panel of the HT GC5xx board and supplied by the same HT GC5xx supplying source.

In any case, we suggest that the contingent resistor for I/V conversion on the output current loop is placed as close as possible to the voltage or rpm regulator, so to have a high immunity to electromagnetic interferences. Utilize a shielded connection cable with adequate insulation.

NOTE Only for HT GC500*Plus*:

HT GC500*Plus* is already provided with two powered outputs for AVR and SPEED and, safe for special applications, it doesn't need the PWm - current converter.
In the event that the PWM - current converter is anyway used, the control output value is limited between a minimum of 4% and a maximum of 96%.

5.3.3 JW – Powered analogue inputs (HT GC500)

Terminal	Function
JW-1	AN.IN1
JW-2	AN.IN1_RTN reference earth dedicated to ANALOGUE INPUT 1
JW-3	AN.IN2
JW-4	AN.IN2_RTN reference earth dedicated to ANALOGUE INPUT 2

HT GC500 is provided with two inputs for the measurement of specific voltage signals for 0..10VDC signals.

The two ANALOGUE inputs. INPUT 1 and ANALOGUE INPUT 2 are not galvanic isolated, but provide the opportunity to perform the measurement of signal in differential mode, so as to compensate for any non-equipotentiality of the earth of the signal source with reference to GND. The compensation range is -10 /+9VDC

Reference JW-2 and JW-4 terminals are internally connected to GND through 1-kohm resistors; this allows avoiding their connection to the earthing of voltage signal sources for short connections inside the electrical panel.

For configuration and uses of analogue inputs see par. 7.8

5.3.4 JWB – Analogue inputs (HT GC500*Plus*)

Terminal	Function
JWB-1	**+5V powered output exclusively used as positive reference for the use of trimmer/potentiometer for analogue inputs. Minimum resistor value should be 10kohm.**
JWB-2	**GND output exclusively used as negative reference for the use of trimmer/potentiometer for analogue inputs.**
JWB-3	AN.IN1
JWB-4	AN.IN1_RTN
JWB-5	AN.IN2
JWB-6	AN.IN2_RTN

HT GC500 *Plus* is provided with two outputs for the measurement of specific voltage signals for 0..10VDC signals

The two ANALOGUE inputs. INPUT 1 and ANALOGUE INPUT 2 are not galvanic isolated, but provide the opportunity to perform the measurement of signal in differential mode, so as to

compensate for any non-equipotentiality of the earth of the signal source with reference to GND. The compensation range is -10 /+9VDC

Reference JW-2 and JW-4 terminals are internally connected to GND through 1-kohm resistors; this allows avoiding their connection to the earthing of voltage signal sources for short connections inside the electrical panel.

Besides there are a JWB-1 output at +5VDC set and a JWB-2 output connected to the earth inside the device, specifically provided for the utilization with potentiometers. The overall minimum resistance applicable between JWB-1 and JWB-2 is of 10kohm.

For configuration and uses of analogue inputs see par. 7.8

5.3.5 Use of JW and JWB analogue inputs with potentiometers

One way to utilize ANALOGUE INPUT1 e ANALOGUE INPUT2 is to set speed, power or other set-ups by using potentiometers.

It is possible to use an external set voltage source, preferably insulated and set at 10VDC. The negative of the voltage source should be connected to JB-1 GND of the board.

(!)BEWARE!: when using external voltage references, do not connect JWB-2 internal negative reference clamp.

Only with HT GC500^{Plus} is possible to use JWB-1 clamps, only to this purpose, as source set at +5VDC to which it is possible to connect one or more voltage adjustment potentiometers (with halved-measure resolution); in this case JWB-2 clamp should be used as reference earth. It is possible to use a conversion curve in order to redefine the full scale at +5VDC (see par 7.7).

(!)WARNING: ***The minimum resistance between JWB-1 (+5 V reference) and JWB-2 (internal reference earthing) should not fall below 10 kohm.***

5.3.6 JY – Analogue output (HT GC500^{Plus}) (AO_CONTROLLER_01)

Terminal	Function
JY-1	VOUT1+
JY-2	GND1
JY-3	VOUT1-

Analogue output intended to the interfacing of external devices provided with the powered analogue input.

This output is used, by default, to supply a DC signal to the rpm regulator. The output voltage can be controlled through TR1 potentiometer, between a minimum of ±1VDC and a maximum of ±10VDC. The output can be symmetric if you connect at Vout1+ and Vout1- or asymmetrical if you connect between Vout1+ and GND1.

- TR1 potentiometer defines the maximum of Vout1+ and Vout1-
- The output is galvanic isolated (floating voltage source).
- The minimum load impedance is 10 kohm

P.6001 parameter defines the output function; when it is set as AIF.0000 - “Unused” the output is turned off, reducing in this way the consumption of the device.

The range value of output voltage can be controlled by means of the TR1 potentiometer and fine-tuned through P.0856 parameter (output minimum value expressed in %) and P.0857 parameter (output maximum value expressed in %) so as to get an accurate output range.

P.0831 parameter defines if the control is of normal or reverse:

- 0 - Normal setting: an ***increase*** of the control (expressed as a percentage) corresponds to an ***increase*** of the output voltage and vice versa.
- 1 - Reverse setting: an ***increase*** of the control (expressed as a percentage) corresponds to a ***decrease*** of the output voltage and vice versa.

P.0840 parameter defines the output idle value expressed in %. It should be adequately adjusted to get engine rated speed.

To know available functions to be assigned to other parameters related to this analogue output, refer to doc. [2] SICES EAAM0322xx – HT GC500 parameters table.

5.3.7 JX – Analogue output (HT GC500^{Plus}) (AO_CONTROLLER_02)

	Function
JX-1	VOUT2+
JX-2	GND2
JX-3	VOUT2-

Analogue output intended to the interfacing of external devices provided with live input.

This output is used, by default, to supply a DC signal to the voltage regulator(AVR), to be able to control generator voltage and reactive power for parallel systems. Output voltage can be adjusted through TR2 potentiometer, between a minimum of ±1V and a maximum of ±10V. The output can be symmetric if you connect at Vout2+ and Vout2- or asymmetrical if you connect between Vout2+ and GND2.

- TR2 potentiometer defines Vout2+ and Vout2- maximum
- The output is galvanic isolated (floating voltage source).
- The minimum load impedance is 10 kohm

P.6002 parameter defines the output function; if set as AIF.0000 - “Unused”, the output is turned off, reducing in this way the consumption of the device.

The range value of output voltage can be controlled by means of TR2 potentiometer and fine-tuned through P.0862 parameter (output minimum value expressed in %) and P.0863 parameter (output maximum value expressed in %) so as to get an accurate output range.

P.0861 parameter defines if the control is normal or reverse:

- 0 - Normal setting: an ***increase*** of the control (expressed as a percentage) corresponds to an ***increase*** of the output voltage and vice versa.
- 1 - Reverse setting: an ***increase*** of the control (expressed as a percentage) corresponds to a ***decrease*** of the output voltage and vice versa.

P.0867 parameter defines output rest value expressed in %. It should be adequately adjusted to get alternator rated voltage.

To know available functions to be assigned to other parameters related to this analogue output, refer to doc. [2] SICES EAAM0322xx – HT GC500 parameters table.

6. Front panel

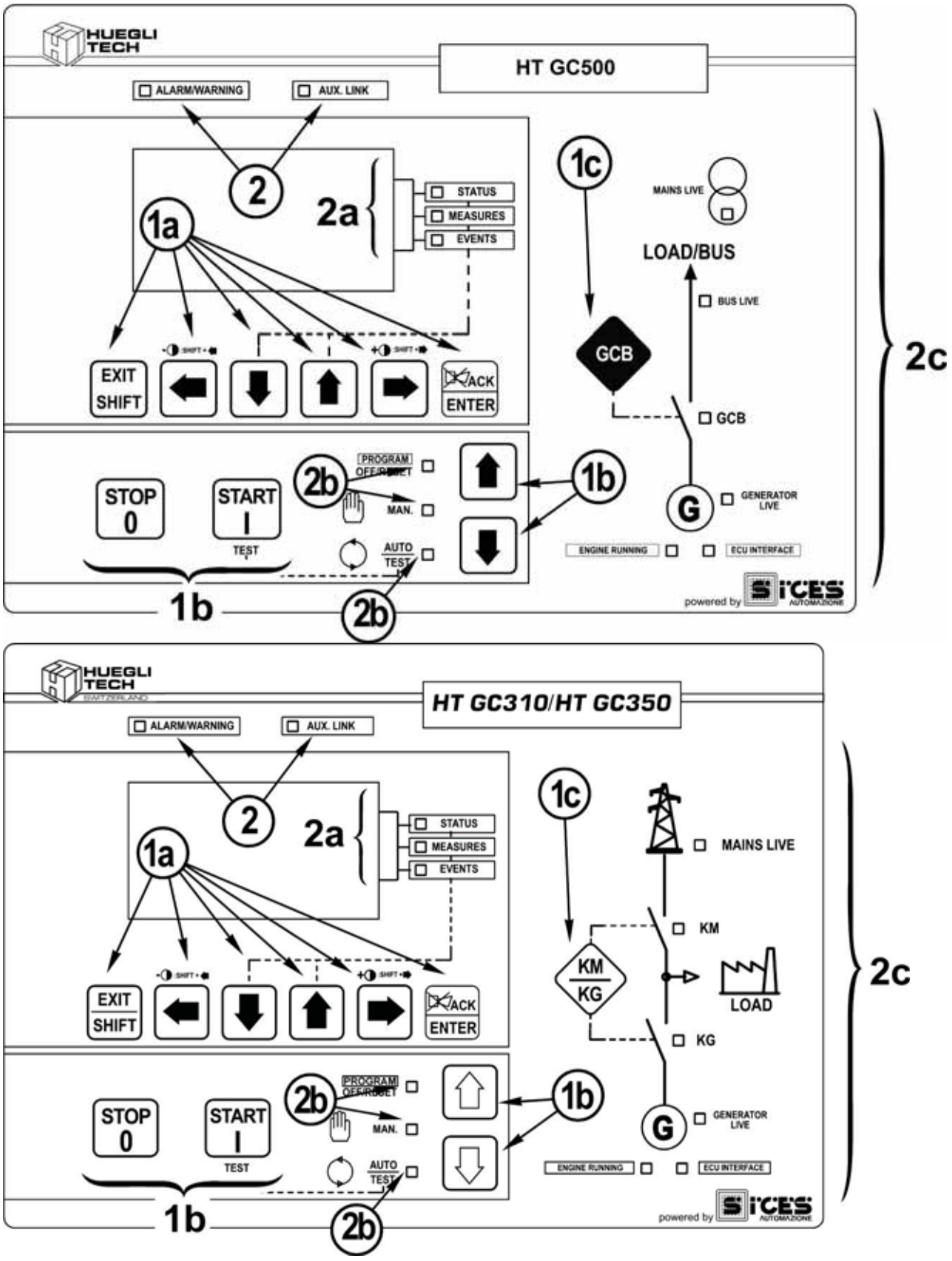

Fig. 1 – HT GC310 / HT GC350 Front Panel - Type 1

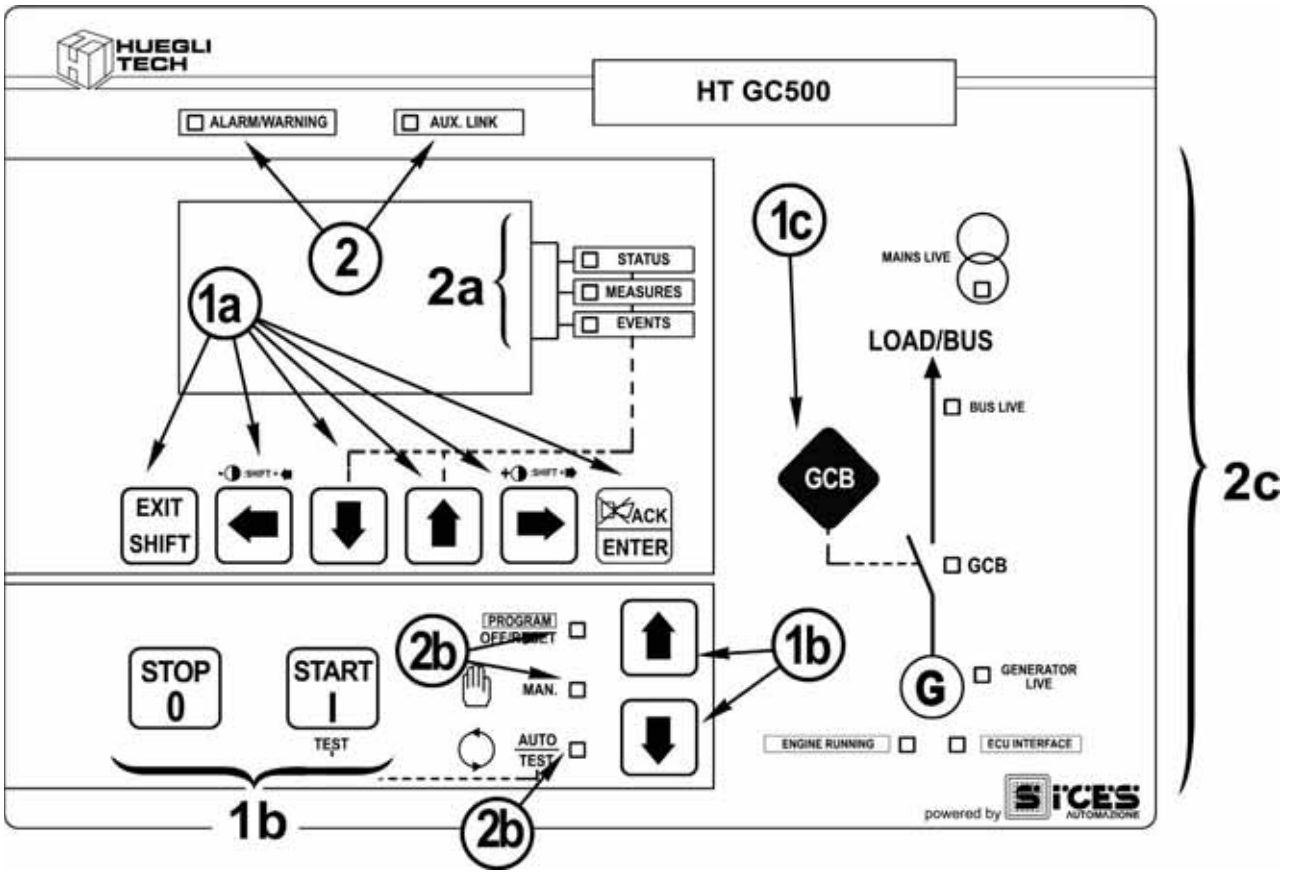

Fig. 2 – HT GC5xx Front Panel - Type 1

Fig. 3 – Front Panel - Type 2

KEY:

- Pushbuttons (1a, 1b, 1c)
- Warning lights (2, 2a, 2b, 2c).

6.1 Pushbuttons

Pushbuttons	Function
▲ ▼	For uses in combination with EXIT/SHIFT key, see description of this key. They allow selecting the main mode of the multifunctional display (**PROGRAM, STATUS, MEASURES, ENGINE, EVENTS, PMCB**). In **PROGRAM** and **EVENTS** mode you can scroll the menus and the variables/settings. During the setting, they allow increasing/decreasing the variable/setpoint value (during programming, during setpoints modification directly from the normal pages of the display, in language selection). Select the counter to be set to zero. They allow to scroll alarm or status if this function is active.
► ◄	For uses in combination with EXIT/SHIFT key, see description of this key. These buttons let you select the previous or next page on the display in all modes, except in the **PROGRAM** mode. In **PROGRAM** mode, they are used to position the cursor when entering the strings. For HT GC5xx, they allow selecting the setpoint to be modified among the available ones on the displayed page (after having pressed **ENTER**).

Pushbuttons	Function
ENTER /ACK	For uses in combination with EXIT/SHIFT key, see description of this key. Uses as per **ENTER**: It allows activating **PROGRAM** mode. Once it has been activated, it allows entering a submenu. It allows activating the **EVENTS** function and allows the opening of the selected archive. It allows starting a modification operation on a variable (during programming, during setpoints modification directly from the normal pages of the display, in language selection). Besides it allows confirming the set value. It activates the scroll mode of anomalies or statuses and some special modes on the display. It allows changing the display mode of digital inputs and outputs. It allows activating the selecting mode of the counter to be set to zero. Uses as per **ACK**: It allows suppressing the hooter (if activated). If the hooter isn't activated, it allows recognizing active anomalies.
EXIT / SHIFT	Uses as per **SHIFT**: While it is pressed, it shows the status of the system on the first row (instead of the status bar). By quickly pressing the key two times, the information is permanently displayed. In some page of the display, it shows an help text in the last row. On some pages of the display, the information is shown in rotation: by pressing and holding this key, the rotation stops on the currently displayed information. In the synchronization page (HT GC5xx), when pressed, it shows the actual controls sent to voltage/rpm regulators, instead of references. For boards with “type 1” keyboard: when used in **MAN** mode, depending on the selected configuration, it allows, in conjunction with the **GCB** key, controlling **MCB** mains switch. Pressed alongside the ◄ or ► pushbuttons, it changes the multifunction display contrast During the setting, used in combination with ▲▼ keys, it allows increasing/decreasing more quickly the variable/setpoint value (during programming, during setpoints modification directly from the normal pages of the display, in language selection). In **PROGRAM** mode, when it is used in combination with ▲▼keys, it allows a faster scroll of menus. Uses as per **EXIT**: It deactivates the scroll mode of anomalies or statuses. During the setting, it cancels the ongoing modification (during programming, during setpoints modification directly from the normal pages of the display, in language selection). It deactivates the selection mode of the counter to be reset. During programming or in HISTORY view, it allows to go up the in the previous menu level or to exit the function. If it is kept pressed for at least 2 seconds, the programming mode is leaved retaining the current menu position for further programming access. Used in combination with **ENTER** key, it allows “Accepting” possible warnings about anomalies on the non-volatile memory at starting. If pressed alongside the **ENTER** pushbutton for at least 5 seconds, it executes a clear task that depend on the shown screen of the multifunction display: default parameters are reloaded, counters are cleared, history data are cleared, peak values are cleared, cancel the BUS-OFF status of CAN-BUS.

Pushbuttons	Function
STOP	In **OFF/RESET**: it lights all warning lights (to diagnose possible broken warning lights). In **MAN**: it is used to control engine manual stop. In **AUTO**, **TEST** or **REMOTE START**: it activates A007 shutdown. Pressed at the same time with the START pushbutton at the power up, it allows to enter the board special functions. At starting, if errors in the non-volatile memory are reported, it allows repeating the test.
START	In **MAN** mode it can be used to start the engine. In **AUTO** mode enables/disables TEST mode. Only for the HT GC5xx boards: it temporarily disables the “inhibition to automatic intervention” due to “load management”, by allowing putting back into parallel a generator that was stopped due to low load. Pressed at the same time with the STOP pushbutton at the power up, it allows to enter the board special functions.
MODE UP **MODE DOWN**	They allow selecting the main operating mode of the board (see description of operating modes below). **NOTE: In order to change the mode, the pushbuttons must be kept pressed for at least half seconds.**
KM/KG or **MCB/GCB** or **GCB**	*Key available on models with "type 1" keyboard.* The name of the key changes depending on the kind of HT GCxxx board. To control switches, it can be used only in **MAN** and **TEST** mode. HT GC3XX boards: • Pressed alone opens/closes GCB switch. • If pressed in combination with SHIFT key, it controls the opening of both MCB and GCB switches: if they were already open, it would control the closing of MCB switch. HT HT GC5xx boards: • Pressed alone opens/closes GCB switch. • When it is pressed in combination with SHIFT key, it will open/close MCB switch. It is also used in the procedure that allows changing the rated speed of Volvo EDC3 engines.
GCB	*Key available on models with "type 2" keyboard.* It can only be used in **MAN** and **TEST** modes to open/close GCB circuit breaker. It is also used in the procedure to change the rated speed of Volvo EDC3 engines.
MCB	*Key available on models with "type 2" keyboard.* It can only be used in **MAN** and **TEST** modes to open/close MCB circuit breaker.

6.2 Warning lights

Led off	LED steady ON	LED flashing
□	▣	◘

Signalling		Function
ALARM / WARNING	▣	Signals at least one lockout or power-off or unload anomaly.
	◘	Flashing (lit at 50%): at least an early warning is present, but no shutdown, deactivation and discharge are present.

Signalling		Function
	☐	No anomalies.
AUX. LINK	▣	It indicates that a communication on one of the serial interfaces.
	▣	Flashing (lit at 50%): it indicates that a TEST or REMOTE START control from one of the serial interfaces is active.
	☐	It indicates that no communication on the serial interfaces.
STATUS	▣	Available on boards with "type 1" keyboard. It indicates that presently the visualization of the status pages (“S.XX”) is selected on the multifunctional display.
	☐	-
MEASURES	▣	Available on boards with "type 1" keyboard. It indicates that presently the visualization of the electric measures (“M.XX”) is selected on the multifunctional display For HT HT GC5xx it is on even if the display shows pages linked to parallel (“B.XX”).
	☐	-
EVENTS	▣	Available on boards with "type 1" keyboard. It indicates that presently the visualization of the historical archives (“H.XX”) is selected on the multifunctional display
	☐	-
OFF/RESET	▣	It indicates that the board is in OFF/RESET mode.
	▣	Flashing (lit at 50%): it indicates that the display of the programming pages (“P.XX”) is active on the multifunctional display
	☐	-
MAN	▣	It indicates that the board is in MAN mode.
	☐	-
AUTO / TEST	▣	It indicates that the board is in AUTO mode.
	▣	Flashing (lit at 50%): it indicates that the board is in TEST mode.
		Flashing (lit at 90%): it indicates that the board is in REMOTE START mode.
	☐	-
MAINS LIVE	▣	Mains voltages and frequency are "permanently within tolerance".
	▣	Flashing (75% illuminated): the mains is present, but either a voltage or the frequency are above the maximum threshold.
		Flashing (50% illuminated): transition between the "permanently within tolerance" and "absent" statuses.
		Flashing (25% illuminated): the mains is present, but either a voltage or the frequency are below the minimum threshold.
		Flashing (5% illuminated): mains is out of tolerance Information is received by the MC100 boards, but more than one MC100 boards are sending discordant information.
	☐	Mains voltages and frequency are "absent".
KM or MCB	▣	The MCB switch is closed.
	▣	Flashing (25% illuminated): MCB switch is opened at the presence of the closing control.
		Flashing (75% illuminated): MCB switch is closed at the presence of the opening control.

Signalling		Function
	☐	The MCB switch is opened.
BUS LIVE	▣	Signals BUS line ON.
	▣	Flashing (50% on): it indicates that the synchronization for the closing of GCB is in progress (only for HT HT GC5xx, in the version with "type 1" keyboard).
	☐	Signals BUS line OFF.
KG or **GCB**	▣	The GCB switch is closed.
	▣	Flashing (25% illuminated): GCB switch is opened at the presence of the closing control.
		Flashing (50% on): it indicates that the synchronization for the closing of GCB is in progress (only for HT HT GC5xx, in the version with "type 1" keyboard).
		Flashing (75% illuminated): GCB switch is closed at the presence of the opening control.
	☐	The GCB switch is opened.
GENERATOR LIVE	▣	Generator voltages and frequency are "permanently within tolerance".
	▣	Flashing (75% illuminated): the generator is present, but either a voltage or the frequency are above the maximum threshold.
	▣	Flashing (50% illuminated): transition between the "permanently within tolerance" and "absent" statuses.
	▣	Flashing (25% illuminated): the generator is present, but either a voltage or the frequency are below the minimum threshold.
	☐	Generator voltage and frequency are not present.
ENGINE RUNNING	▣	The engine is running
	▣	Flashing (50% illuminated): the engine is running, the cooling cycle is in progress.
	☐	The engine is OFF.
ECU INTERFACE	▣	It indicates that the CAN-BUS connection with the engine is active and HT GCxxx is receiving information from the engine.
	▣	Flashing (lit at 25%): it indicates the ERROR-PASSIVE status on the CAN-BUS connection.
		Flashing (lit at 50%): it indicates the BUS-OFF status on the CAN-BUS connection.
	☐	It indicates that CAN0 CAN-BUS interface is disables, or that the connection is working, but the engine is not transmitting information.

In the OFF/RESET mode, by pressing the STOP button, the board turns on all the warning lights, therefore allowing testing their functioning. If an output with DOF.3153 function is configured ("lights test"), also this output is activated: it can be used to turn on any lights outside the board, and have a single procedure to test the lights.

6.3 Multifunctional display

It is a graphic display with a resolution of 128x64 pixel. HT GCxxx utilizes fonts with two different dimensions to visualize different types of data on a matrix of 21 characters for 8 lines.

6.3.1 Lighting

The backlighting lamp is managed by the board that provides to turn it off within a configurable time span (P.0492) if no key is pressed.

To turn it on again it is enough to push any key. This function can be disabled by setting parameter P.492 to **0**.

If P.0492 is different from zero, the lamp will be off for most of the time: by using P.0493 parameter, it is possible to force the lamp "always on" when the engine is started (in order to have greater visibility on the measures shown on the display).

During engine starting phase, the lamp is automatically turned-off to reduce the power consumption of the controller board, in order to ensure greater autonomy for the controller itself in the event of critical conditions of the starter battery.

In case of very low temperatures (<10°C) within the board, the lamp remains anyway automatically on to heath the display (LCD displays get slower in writing when temperature decreases). On the contrary, in case of high temperatures (>55°C), the lamp is always automatically turned off after a second.

6.3.2 Contrast adjustment

Contrast can be set by simultaneously pressing SHIFT and ◄ (to decrease it) or SHIFT and ► keys (to increase it).

6.3.3 Mode navigation

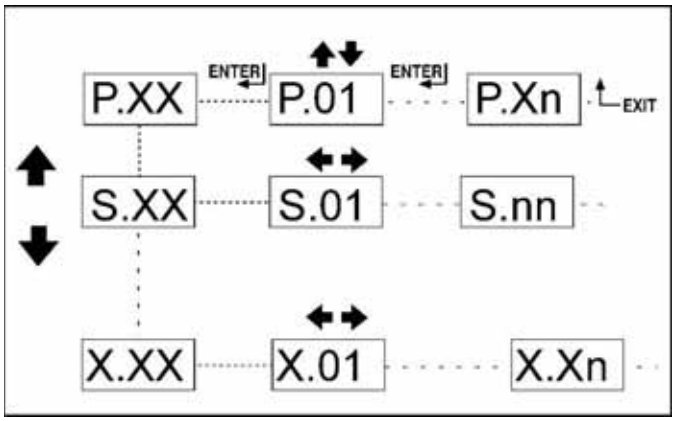

Fig. 2 - Mode navigation

The display has different display modes with various pages.

Mode	Description	Page identifier
PROGRAMMING	Programming	P.XX
STATUS	Status information	S.XX
MEASURES	Electrical measurements	M.XX
PARALLEL	Measures linked to parallel functions (only HT HT GC5xx).	B.XX
ENGINE	Measurements acquired from the engine	E.XX
HISTORY	History logs	H.XX

Screen modes are usually selected through ▲▼keys, whereas pages of each mode can be selected by means of ◄► keys.
Some modes are structured as menu; in this case, after having activated the mode through ENTER key, the keys ▲▼ will be used to navigate within menus.

When ▲▼ and ◄► keys have to be used to manage functions within the page, it will be necessary to push ENTER key to activate these functions and to push EXIT key to deactivate them.

6.3.4 Structure of display areas

All the multifunctional display's pages have the same structure

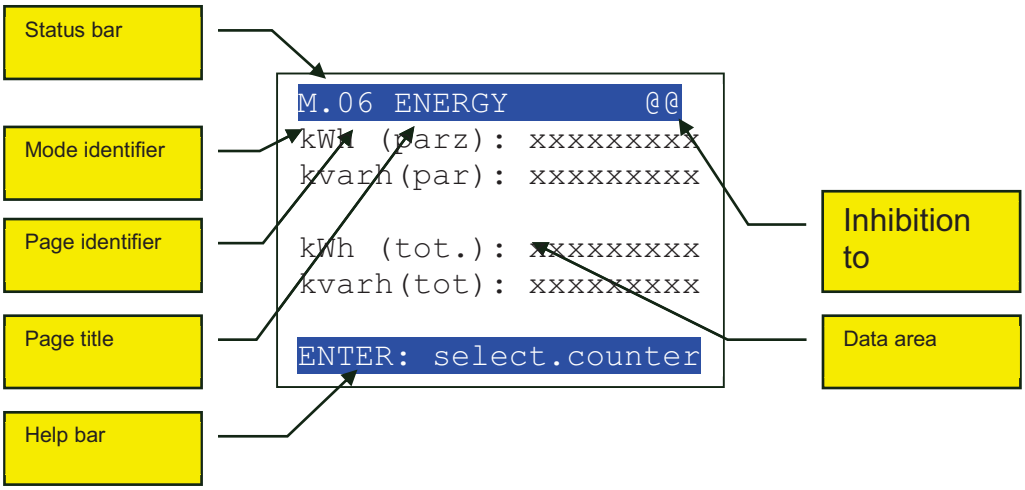

The status bar, shown in negative mode, is always present and contains useful information.

- The “Mode identifier” that consist of different letters that identify the screen mode. See previous table.
- The “Page identifier” that shows which page is currently shown on the display.
- The page title is a text (depending on the selected language) that describes the information shown on the page in short.
- If digital inputs are used to select the functioning mode of the board, a key-shaped icon is shown on the right of the status bar. See 10.1.
- If any form of “inhibition to automatic intervention” of the generator is active (from contact, out from scheduled times, etc.), a small padlock is shown on the right hand of the status bar. See 10.6.
- During data saving in the non-volatile memory, a small @ is shown on the right hand of the status bar.

The combination of mode and page identifiers univocally identifies any possible page of the multifunctional display.

By keeping SHIFT key pressed, the status bar shows, instead of the above-listed information, some important working statuses of the board. If statuses are more than one, the board shows them in rotation, one every two seconds. By quickly pressing SHIFT key twice (double click), status information are continuously displayed in rotation on the status bar, until the page is changed or SHIFT key is pressed again twice.

The help bar is only present on some specific pages. It could be necessary to press “SHIFT” key to make it visible.

6.3.5 (P.XX) Programming

This mode lets you display and change the programming parameters. See the paragraph 7 for detailed information on programming.

6.3.6 (S.XX) Status information

In this way, information on the system status is provided. You can scroll through the various pages using ◄►.

6.3.6.1 S.01 STATUS

Purpose of this page is to report the general status of the plant. It contains:

- Working status of the generator (engine stopped, running, supplying, etc.).
- Working mode of the controller (MAN, AUTO, etc.).
- The status of the electrical mains (absent, low, high etc.)
- The presence of “inhibition to the automatic intervention” of the generator.
- The presence of “inhibition to the power load”.
- Possible enabling of the engine protections OVERRIDE.

Some information are shown alongside an elapsing time; for example, during engine cooling down, the residual time is shown.

6.3.6.2 S.02 ANOMALIES

This page is automatically displayed in case of a new anomaly. For every anomaly, it is shown:

- A letter that identify the type.
  - “A”: alarm (block)
  - “U”: unload (only HT HT GC5xx).
  - “D”: deactivation.
  - “W”: warning.
- A three digit numeric code that uniquely identify the anomaly. This code flashes if this anomaly hasn't been “recognized” yet (see paragraph 11.2) with “ACK” key.
- An alphanumeric description, which depends on the language currently selected and which in some cases can be customized using the controller parameters.

Every fault uses one or two rows of the display LCD. The fault shown in the highest position is the most recent, chronologically. If the space available is not enough to display all the faults, only the most recent will be displayed. In order to see the other, it is required to:

- Use the ENTER button.
- Use the ▲▼ keys to scroll the anomalies
- Press EXIT to leave the mode

Some anomalies can show additional diagnostic information. This information is automatically displayed in case of a single active anomaly: if there are several active anomalies, use the procedure described above to select the individual anomalies and display any additional diagnostic information about the selected anomaly. The anomalies codes that have additional diagnostic information are:

- 273 (“incoherent parameters”). Only HT HT GC5xx. It displays an additional message to help understanding the problem.
- 277 (“GCB cannot be closed”). Only HT HT GC5xx. It displays an additional message to help understanding the problem.
- 278 (“MCB cannot be closed”). Only HT HT GC5xx. It displays an additional message to help understanding the problem.
- 252 ("missing expansion module"). It displays an additional message that identifies the expansion module, but that does not communicate with HT GCxxx.

- 253 ("missing analogue measurement"). It displays an additional message that identifies the acquisition channel and the expansion module from which a measure should be received, that is actually missing.
- 254 ("address duplicated on EXBUS"). It displays an additional message that identifies the type and address of the expansion module that results as connected twice to HT GCxxx.
- 255 (“connection interrupted with one sensor”). It displays an additional message that identifies the acquisition channel and the expansion module that are transmitting the “broken wire” information.
- 198 and 199 ("yellow light" and "red light" from CAN-BUS). In this case the board shows also the diagnostic codes received from the electronic control unit that controls the engine. For every diagnostic code it is shown:
    - The SPN code (it is a code defined by the SAE J1939 standard, which identifies the mechanical component that is having the problem).
    - The FMI code (it is a code defined by the SAE J1939 standard, which identifies the type of problem).
    - How many times this diagnostic code has been activated (OC).
    - The alarm code specific for the type of engine connected (DTC).
    - An alphanumeric description of the problem (if available, always in English).

  If one or more of the above information is not available, it is replaced by dashes or not displayed. If multiple diagnostic codes on the engine are active at the same time,they will be cyclically alternated on the display every 2 seconds. The engine diagnostic codes are stored (even if the engine deactivates them) until the yellow/red CAN-BUS indicator light warning is acknowledged with the “ACK” button.

6.3.6.3 S.03 PLANT

The digital inputs of the board can be configured to get "generic" status information, divided into two categories: simple (DIF.0037 function– “Generic status”) and important (DIF.0068 function– “Important generic status”). These codes should be set in the parameter that configures input functions (P.0507 for input 1). It is also possible to associate a text to so configured inputs (P.0509 for input 1). When one of these text is activated, the relevant text is shown on this page (if an input configured as "important status" is activated, the display of this page is forced).

Every status uses one row of the display LCD. If no space is available for all the status, only some of them will be shown. In order to see the other, it is required to:

- Use the ENTER button.
- Use the ▲▼ keys to scroll the anomalies
- Press EXIT to leave the mode

When this mode (scroll) is active, the last row of the display (displayed with the negative) shows the currently selected "generic status" index vs total (1/12, for example).

Note: if one of the inputs configured through DIF.0037 function and DIF.0068 function isn't active, the relevant message is not displayed on this page.

6.3.6.4 S.04 SERIAL COMMUNICATION

This page is used to show the serial communications status. In case of functional problems, please, verify the content of this page.

For serial main port the type of connection is always displayed (direct, via modem, via GSM), as well as its status (on standby, communicating etc.) In case of GSM modem, information related to the radio signal strength and the provider are shown.

For HT GC350, HT GC500 and HT GC500^{Plus} it is also shown the status of the second serial port.

6.3.6.5 S.05 CAN-BUS

This page is used to show the CAN-BUS interfaces status. In case of functional problems, please, verify the content of this page.

- CAN0: dedicated to communication with engine electronic controls (ECU).
- CAN1: dedicated to communication with the other SICES boards (PMCB only HT HT GC5xx).

Both interfaces can be used for the connection to enhancement modules (see paragraph 12.13).

For each interface HT GCxxx shows:

- The status of the interface. Three statuses are possible:
  - **ERROR-ACTIVE:** normal operations
  - **ERROR-PASSIVE:** the hardware interface is working, but there are problems in communication.
  - **BUS-OFF:** Gen-set has interrupted the connection to the bus due to too many errors. Usually that happens due to a fault of CAN-BUS interface, or due to a short circuit between CAN-H and CAN-L conductors of the connection cable. Only for HT GC3XX boards, it can also happen if CAN0 interface is no more supplied (terminal 1 and 5 of JO connector).
- The present value of the transmission and reception error counters, managed directly by the CAN-BUS interface.
- The maximum value reached by transmission and reception error counters, managed directly by the CAN-BUS interface. It is possible to set maximum values to zero by means of the following procedure: hold ENTER + EXIT keys pressed for some seconds until the board shows the message “SET TO ZERO/DEFAULT” (in case of HT HT GC5xx, this procedure sets to zero the counters of both CAN-BUS interfaces).

6.3.6.6 S.06 BOARD

This page is dedicated to the board. It contains:

- The language used by the device. It is possible to select a different language from this page:
  - Press the ENTER.
  - Use ▲▼ keys to choose the desired language.
  - Confirm with ENTER.
- Current date and time in long format (flashing if the clock is not valid)
- The temperature inside the board.
- The “internal code” (only for HT HT GC5xx): this is the number that should be supplied to SICES, with justified request, along with the series number, to get the temporary “SICES” password for the modification of parameters (see paragraph 7.1.3). This

password is valid for 2 hours of engine running: after this time HT HT GC5xx generates a new "internal code", which therefore makes the old password void.

- The unambiguous serial number of the controller board (called ID CODE).
- The code of the firmware currently loaded on the controller board (see par. 1.8).
- The firmware code currently charged on the expansion board (present only for HT GC350, HT GC500 and HT GC500^{Plus}).

6.3.6.7 S.07 FUEL PUMP

This page contains information relating to the fuel pump. It is displayed only if a board output is configured to control the pump (DOF.0003 function). See paragraph 10.5.11dedicated to the fuel pump.

This page shows the current status of the pump (off/on) and the request arising from the management logic (starting requested, stopping requested, in hysteresis).

If the tank level is acquired via an analogue input, the board shows also a bar that graphically indicates the current level, showing activation/stopping thresholds of the pump as well.

It also shows the control mode (“Manual-OFF”, “Manual-ON” and “Automatic”). It is possible to change the mode from this page, see paragraph 10.5.11.

6.3.6.8 S.08 DIGITAL INPUT

This page shows the status of all the digital inputs of the board. The following are shown:

- The status of inputs 1...8.
- The status of inputs 9...18 (only for HT GC350, HT GC500 and HT GC500^{Plus}).
- The status analogue inputs of JM connector; so that they can be used as digital ones, it is necessary to configure them through DOF.0099 function in P.0112 , P.0113 or P.0114 parameters. The board displays some dashes if analogue inputs haven't been configured as digital inputs.
- The status of the sixteen virtual digital inputs (see paragraph 7.5.2).

It is possible to display the digital inputs in two different ways:

- **LOGIC STATE**: HT GCxxx shows "1" for all inputs that are active from the logical point of view. HT GCxxx normally considers an digital input active when the related terminal is connected to the battery negative. But it is possible to indicate to HT GCxxx, individually for each input, to consider an input as active when the relevant terminal is floating (reversed polarity, see P.0501 parameter for inputs 1...8, P.0531 for inputs 9...18, P.0570 for analogue inputs used as digital inputs).
- **Physical state**: HT GCxxx shows "1" for all inputs whose terminal is connected to the battery negative. The display is in negative.

There is no parameter to "reverse the polarity" of virtual digital inputs.

It is possible to change the display mode of the digital inputs by pressing the ENTER key.

6.3.6.9 S.09 DITEL DIGITAL INPUT

This page shows the status of all digital inputs (sixteen) of DITEL enhancement module. The page is displayed only if DITEL module has been configured with P.0141 parameter. The board shows some dashes if DITEL module is configured but is not communicating on the CAN-BUS line.

It is possible to display the digital inputs in two different ways:

- **LOGIC STATE**: HT GCxxx shows "1" for all inputs that are active from the logical point of view. Usually, HT GCxxx considers an input to be active when the relevant terminal is connected to GND, therefore, with input opto isolator “on”. It is anyway possible to indicate to HT GCxxx, individually for each input, to consider an input as active when its terminal is floating (reverse polarity, see P.2200 parameter.

- **Physical state**: HT GCxxx shows "1" for all inputs whose terminal is connected to the GND. The display is in negative.

It is possible to change the display mode of the digital inputs by pressing the ENTER key.

6.3.6.10 S.10 DIGITAL OUT

This page shows the status of all digital outputs of the board.

It is possible to display the outputs in two different ways:

- **LOGIC STATE**: HT GCxxx shows "1" for all outputs that are active from the logical point of view, that is, when the function associated with the output requires its activation. Normally, HT GCxxx activates the internal control relay or transistor when the function associated with the output requires its activation. But it is possible to indicate to HT GCxxx, individually for each output, to activate the internal transistor or relay when the function associated to the output **doesn't** require the activation (reversed polarity, see P.0580 and P.0589 parameters, this last one only for HT GC350, HT GC500 and HT GC500^{Plus}).

- **Physical state**: HT GCxxx shows "1" for all the outputs whose internal relay or transistor is activated. The display is in negative.

It is possible to change the displaying mode of the digital outputs by pressing the ENTER key.

6.3.6.11 S.11 DITEL DIGITAL OUT

This page shows the status of all digital outputs of DITEL enhancement module. The page is displayed only if DITEL module has been configured with P.0141 parameter. The board shows some dashes if DITEL module is configured but is not communicating on the CAN-BUS line.

It is possible to display the outputs in two different ways:

- **LOGIC STATE**: HT GCxxx shows "1" for all outputs that are active from the logical point of view, that is, when the function associated with the output requires its activation. Normally, HT GCxxx activates the internal control relay or transistor when the function associated with the output requires its activation. It is anyway possible to indicate to HT GCxxx, individually for each output, to activate the internal relay or transistor when the function associated with the output does not require its activation (reverse polarity, see P.3200).

- **Physical state**: HT GCxxx shows "1" for all the outputs whose internal relay or transistor is activated. The display is in negative.

It is possible to change the displaying mode of the digital outputs by pressing the ENTER key.

6.3.6.12 S.12 ANALOGUE INPUTS

This page shows the status of all analogue inputs of the board (JM connector). For each input the measure in VDC is displayed, for terminals JM-2, JM-3 and JM-4 the measure in ohm is also displayed.

Only for HT HT GC5xx boards, some additional rows show present VDC measure of the analogue inputs, respectively, on JW connector and on JWB connector.

6.3.6.13 S.13 DIGRIN/DITHERM ANALOGUE INPUTS

This page shows the temperatures measured by DITHERM or DIGRIN enhancement modules (up to three temperatures for each module). The page is shown only if the modules have been configured through P.0142 parameter.

For each measure the board shows:

- Some dashes if the module does not transmit the measurement.
- The wording "OPEN" if the module indicates "broken wire" status.
- The wording "+OVER" if the module indicates "overflow" (too-high measure) status.
- The wording "-OVER" if the module indicates "underflow" (too-low measure) status.
- The temperature measured in the other cases.

6.3.6.14 S.14 DIVIT ANALOGUE INPUTS

This page shows measures got by DIVIT enhancement module (up to four measures). The page is displayed only if the module has been configured through P.0143 parameter.

For each measure the board shows:

- Some dashes if the module does not transmit the measurement.
- The wording "OPEN" if the module indicates "broken wire" status.
- The wording "+OVER" if the module indicates "overflow" (too-high measure) status.
- The wording "-OVER" if the module indicates "underflow" (too-low measure) status.
- The measure got in the other cases.

6.3.6.15 S.15 ANALOGUE OUTPUTS

This page shows the current value (%) of board analogue outputs. This page is only available for HT HT GC5xx boards. It is available only from 01.13 version of the firmware.

6.3.6.16 S.16 DANOUT ANALOGUE OUTPUTS

This page shows the current value (%) of the analogue outputs of DANOUT enhancement module (up to four outputs). The page is shown only if the module has been configured through P.0144 parameter. The values of analogue outputs are displayed with the negative if DANOUT module isn't communicating on CAN-BUS line.

6.3.7 (M.XX) Electrical measure.

In this mode the measures carried out by the board on electric lines can be displayed through different pages selectable by means of horizontal scroll keys.

6.3.7.1 M.01 MAINS (MAINS/BUS for HT HT GC5xx)

For HT GC3XX boards, this page shows the measures carried out on the mains. Only for HT HT GC5xx, the measures shown in this page refer to:

- Mains, if P.0126 = 1.
- Parallel bars of generators, if P.0126 = 0.

This page shows measured voltages and frequency, besides phase rotation wise (clockwise or counter clockwise). For three-phase systems, the phase-to-phase voltages are displayed; for the one-phase systems, the single phase voltage is displayed (the others are replaced by dashes) and the rotation direction is not displayed.

Down on the right hand it is possible to see an icon that immediately allows identifying that the page is relevant to mains/bar measures and not to the generator ones.

6.3.7.2 M.02 GENERATOR

This page shows the voltages and the frequency of the generator, in addition to the rotation direction of the phases (clockwise or counter clockwise). For three-phase systems, the phase-to-phase voltages are displayed; for the one-phase systems, the single phase voltage is displayed (the others are replaced by dashes) and the rotation direction is not displayed.

Down on the right hand it is possible to see an icon that immediately allows identifying that the page is relevant to generator measures and not to mains/bar ones.

6.3.7.3 M.03 CURRENTS

This window displays the three phase currents measured by the controller board (for single-phase systems the second and the third are replaced by dashes). If HT GCxxx is adequately configured (P.0109 <> 0), also the fourth current is shown (auxiliary current).

NB: normally, these currents are the ones delivered by the generator. But if measurement current transformers are connected on users' lines instead of on the generator lines (P.0124 =1), displayed current can be those absorbed by the mains. At the bottom right corner, the symbol of the generator or of the mains are displayed from time to time in order to identify the real source of the current.

6.3.7.4 M.04 POWERS 1

This page shows the active powers (kW), the power factors and the loading types on individual phases and globally (for single-phase systems, the information related to phases 2 and 3 are replaced by dashes).

At the right bottom corner the generator or mains icon is displayed, to indicate which powers you are looking at (see note in 6.3.7.3).

6.3.7.5 M.05 POWERS 2

This page shows the reactive powers (kvar), and the apparent powers (kVA) on individual phases and globally (for single-phase systems, the information related to phases 2 and 3 are replaced by dashes).

At the right bottom corner the generator or mains icon is displayed, to indicate which powers you are looking at (see note in 6.3.7.3).

6.3.7.6 M.06 ENERGY 1

In this page (partial and total) active and reactive power counters measured by the board **when users are connected to the generator** (current transformers on generator or on users' lines and GCB closed), are shown.

The active power is counted only if positive (it is not counted in the event of reversed power). The reactive power is counted in module (the counter goes up both with capacitive loads and with inductive loads).

On this page you can reset to zero the partial counters individually. To this purpose it is necessary to:

- Press ENTER: one of the counters will be highlighted.
- Use the vertical scrolling buttons ▲▼ to select the counter you want to reset to zero.
- Press and hold the ENTER and EXIT buttons for five seconds.
- Use the EXITbutton.

At the bottom to the right, the display shows an icon which identifies the generator, so as to allow you to easily distinguish this page from the next, which has an identical structure.

6.3.7.7 M.07 ENERGY 2

In this page (partial and total) active and reactive power counters measured by the board **when users are connected to mains** (current transformers on users' lines and GCB open), are shown. This page is visible only if HT GCxxx has been configured to operate with current transformers on users instead of on the mains (P.0124 = 1).

The active power is counted only if positive (it is not counted in the event of reversed power). The reactive power is counted in module (the counter goes up both with capacitive loads and with inductive loads).

On this page you can reset to zero the partial counters individually. To this purpose it is necessary to:

- Press ENTER: one of the counters will be highlighted.
- Use the vertical scrolling buttons ▲▼ to select the counter you want to reset to zero.
- Press and hold the ENTER and EXIT buttons for five seconds.
- Use the EXITbutton.

At the bottom to the right, the display shows an icon which identifies the mains, so as to allow you to easily distinguish this page from the previous, which has an identical structure.

6.3.7.8 M.08 SYSTEM

This window is only available for HT HT GC5xx boards. It shows the single-line scheme of the system. The shown items depend on the type of system (P.0802). The following can be displayed:

- The symbol of the generator (if there is voltage on a dark background).
- GCB switch.
- MGCB switch.
- Users (if powered, on a dark background).
- MCB breaker.
- The mains (flashing if there is no voltage).

- The setpoints for the active and reactive power for the supply in parallel with the mains (or the setpoint for the DROOP if this mode is active).

The symbol of the switches also contains an indication of the fact that it is possible to use synchronization to control its closure (empty dots) or not (filled dots). Moreover, the board, autonomously shows the symbol of the interblocks among the switches for the systems that do not include the parallel. It can also display the symbol of a commutator (SIRCOVER) instead of the two switches, if properly configured.

In addition, where possible, HT HT GC5xx shows:

- The active power and power factor of the generator.
- The active power and the power factor on the parallel bars (total of generators).
- The active power and the power factor of the users.
- The active power of the main.

Finally, where possible, HT HT GC5xx shows some arrows that indicate the direction of the power flow in the various branches of the system.

HT HT GC5xx independently determines (on the basis of the system configuration) what should be displayed.

It is generally possible to modify from this page the setpoints for the power or the DROOP (if displayed), unless these setpoint are acquired from analogue inputs or from any MC100 board connected on PMCB. To modify the setpoints:

- Press ENTER key: the selected setpoint will be displayed in negative.
- Use ▲▼ keys (possibly together with the SHIFT key) to change the setpoint value.
- Use the ◄► keys to select another setpoint.
- Press ENTER or EXIT to stop the setpoint modification procedure.

Note: if no keys are pressed for 60 seconds, the procedure to modify the setpoints is automatically terminated.

6.3.8 (B.XX) Parallel

In this mode relevant information for parallel operations can be displayed through different pages selectable by means of horizontal scroll keys. All these pages are only available for HT HT GC5xx.

6.3.8.1 B.01 REGULATIONS

This page is available only for HT HT GC5xx.

It shows measures useful to the fine tuning of engine speed and generator voltage. In fact, on the left hand, generator voltages and frequency are shown; as comparison, on the right hand, mains or parallel bars voltages and frequency are shown (it depends on P.0126).

At the bottom of the page present voltage and frequency references, expressed as a percentage, are shown. In case these references aren't linked to an analogue input, it is possible to modify them directly from this page (by modifying in this way generated voltages and frequency):

- Press ENTER key: the selected reference will be displayed in negative.
- Use ▲▼ keys (possibly together with the SHIFT key) to change the reference value.
- Use the ◄► keys to select another reference.

- Press ENTER or EXIT to stop the reference modification procedure.

6.3.8.2 B.02 SYNCHRONIZATION

This page is available only for HT HT GC5xx.

It shows information necessary for the synchronization.

The current phase difference is shown by means of an horizontal bar that acts as synchronoscope. Usually it shows phase angles between -180° and +180°. When the phase error goes below 20°, the bar is downsized to show angles between -20° and +20° (in this case the bar is shown with the negative).

Under the bar 5 small rectangles are shown. The first three ones indicate whether current phase, frequency and voltage differences allow closing the switch (if the rectangle is empty the difference is too high and the switch cannot be closed). The fourth one indicates a possible mismatch of phase-rotation direction (also in this case the empty rectangle indicates that the switch cannot be closed). When all the first four rectangles are entirely “full”, the status of the system is correct to close the switch: so the fifth rectangle becomes full and the board controls the closing of the switch.

At the bottom of the page present voltage and frequency references, expressed as a percentage, are shown. In case these references aren't linked to an analogue input, it is possible to modify them directly from this page (by modifying in this way generated voltages and frequency, easy to perform manual synchronization):

- Press ENTER key: the selected reference will be displayed in negative.
- Use ▲▼ keys (possibly together with the SHIFT key) to change the reference value.
- Use the ◄► keys to select another reference.
- Press ENTER or EXIT to stop the reference modification procedure.

Note: if no keys are pressed for 60 seconds, the procedure to modify the references is automatically terminated.

From 01.13 version of the software on, unless you aren't modifying the voltage/frequency references manually, by holding SHIFT key pressed, the board displays current values of actual regulation controls (frequency and voltage, in %) instead of references (they are displayed with the negative shape, to distinguish them from references).

6.3.8.3 B.03 PARALLEL

This page is available only for HT HT GC5xx.

It displays useful information when the generator is in parallel with the mains or with other generators. Active power, reactive power and power factor are shown. Besides average voltage, frequency and currents of the generator are shown.

It is possible to modify from this page the setpoints for the power or the DROOP, unless these setpoint are acquired from analogue inputs or from any MC100 board connected on PMCB. To modify the setpoints:

- Press ENTER key: the selected setpoint will be displayed in negative.
- Use ▲▼ keys (possibly together with the SHIFT key) to change the setpoint value.
- Use the ◄► keys to select another setpoint.
- Press ENTER or EXIT to stop the setpoint modification procedure.

Note: if no keys are pressed for 60 seconds, the procedure to modify the setpoints is automatically terminated.

6.3.8.4 B.04 MC100 BOARDS

This page is available only for HT HT GC5xx.

It shows the list of mains control boards (MC100) recognized on PMCB CAN-BUS connection. It is useful for diagnostic purposes.

6.3.8.5 B.05 PMC-BUS 1

6.3.8.6 B.06 PMC-BUS 2

6.3.8.7 B.07 PMC-BUS 3

These pages are only available for HT HT GC5xx.

The first part of “B.05” page shows supplied active and reactive power, on the whole, by all generators in parallel. It shows total active and reactive power counters of the system as well.

The second part of “B.05” page, “B.06” and “B.07” page shows active and reactive power, one by one, of each generator connected to PMCB CAN-BUS. They are shown in order of address. “B.05” and “B.06” pages are hidden if there aren't enough generators that require their use.

6.3.8.8 B.08 LOAD FUNCTION 1

This page is available only for HT HT GC5xx.

It is intended to “load management” (see document [4]), that is the capacity to start/stop generators on the basis of the power required by the users.

First of all the second row indicates if the function is enabled. The third row shows which mode is currently selected (for the allocation of priorities to generators). In the fourth row it is possible to select the "master" generator, that is, the one that always remains in motion regardless of load request by users. It can be modified in this page:

- Use the ENTER button.
- Utilize ▲▼keys (in case along with SHIFT key) to select the master generator.
- Press ENTER to confirm or EXIT to abort.

The fifth row shows, in specific situations, the time left to the next automatic change of the “master” generator. At the bottom of the page the list of generators, in order of priority (safe for when the board is "controlled" by MC100), is shown. Generators "not available" for load management are shown last with the negative.

6.3.8.9 B.09 LOAD FUNCTION 2

This page is available only for HT HT GC5xx.

It shows some special measures linked to “load management”. In details:

- ADPs: it's the power (in kW) supplied by the generator.
- ADPsn: it is the power (in kW) that this generator would supply if one of the currently working generator turned off.
- DPRs: it's the power (%) supplied by the generator.
- DPRsn: : it is the power (%) that this generator would supply if one of the currently working generator turned off.
- BPRs: it indicates (%) the quota of the total load supported by this generator.
- BPRsn: it indicates (%) the quota of the total load this generator should supply if one of the currently working generator turned off.

- ADPt: it is the power (in kW) absorbed by loads.
- DPRt: It is the power (%) supplied on the whole by generators.
- MDPt: it is the overall rated power (kW) of supplying generators.

6.3.9 (E.XX) Engine measurements

In this mode, the measurements acquired from the engine are displayed in full.

6.3.9.1 E.01 ENGINE 1

It displays the fundamental measurements for engine management:

- Engine Oil pressure
- Coolant temperature
- Engine speed

If any of these values is not available, it'll be replaced with dashes. If a CAN-BUS connection is active, the type of engine selected is also displayed.

6.3.9.2 E.02 ENGINE 2

It contains other measurements for engine management:

- Battery voltage
- Fuel level

If any of these values is not available, it'll be replaced with dashes.

6.3.9.3 E.03 COUNTERS

This page contains various counters (managed by the controller board), which concern the engine:

- Startups counter (resettable to zero).
- Counter of operating hours (resettable to zero).
- Counter of load operating hours with GCB closed (resettable to zero)
- Counter of operating hours in OVERRIDE (resettable).
- Counter of operating hours.
- Time to next service (hours) counter

If no interval for maintenance has been set (P.0424=0), the last counter shows dashes.

The first four counters are resettable (individually). To reset a counter, the operator must:

- Press ENTER: one of the counters will be highlighted.
- Use the vertical scrolling buttons ▲▼ to select the counter you want to reset to zero.
- Press ENTER and EXIT keys for five seconds (until the board shows a confirmation message).
- Use the EXITbutton.

6.3.9.4 E.04 CAN-BUS 1

This page is displayed only if P.0700 parameter is different from zero.

Some engine measures acquired by CAN-BUS are shown in this page. The number and type of available measures depend on the engine type. Not available measures are shown with dashes. This page shows the following measures

- Engine control unit temperature (SPN_1136).
- Air Temperature (SPN_171).
- Air Pressure (SPN_108).
- Supply battery voltage (SPN_158).
- Coolant pressure (SPN_109).
- Coolant level (SPN_111).
- Hours of engine operation (SPN_247).

6.3.9.5 E.05 CAN-BUS 2

This page is displayed only if P.0700 parameter is different from zero.

Some engine measures acquired by CAN-BUS are shown in this page. The number and type of available measures depend on the engine type. Not available measures are shown with dashes. This page shows the following measures

- Engine Oil Temperature (SPN_175).
- Engine Oil Level percentage (SPN_98).
- Fuel Temperature (SPN_174).
- Fuel Delivery Pressure (SPN_94).
- “Injector Metering Rail Pressure” (SPN_157).
- Instantaneous fuel consumption (SPN_183).
- Total fuel consumption (SPN_250, totale).

6.3.9.6 E.06 CAN-BUS 3

This page is displayed only if P.0700 parameter is different from zero.

Some engine measures acquired by CAN-BUS are shown in this page. The number and type of available measures depend on the engine type. Not available measures are shown with dashes. This page shows the following measures

- Temperature of the air coming out from the turbocharger (SPN_2629).
- (Relative) pressure of the air in the intake duct (SPN_102).
- Air temperature in the intake pipe (SPN_105).
- Intercooler temperature (SPN_52).
- Pressure in the engine crankcase (SPN_101).
- Actuator position (SPN_51).
- Rated speed required by the regulator (SPN_515).

6.3.9.7 E.07 CAN-BUS 4

This page is displayed only if P.0700 parameter is different from zero.

Some engine measures acquired by CAN-BUS are shown in this page. The number and type of available measures depend on the engine type. Not available measures are shown with dashes. This page shows the following measures

- Required torque (percentage of maximum request, SPN_91).
- Actual torque (percentage of the nominal one SPN _513).
- Lost couple (due to friction or other, a percentage of the nominal one, SPN_514).
- Current torque (percentage of the maximum one at present speed, SPN_92).
- Torque required by the regulator (a percentage of the nominal one, SPN_512).
- Exhaust gas temperature - left bank (SPN_2434).
- Exhaust gas temperature - right bank (SPN_2433).
- Exhaust gas temperature - only bank (SPN_2433).

6.3.9.8 E.08 CAN-BUS 5

This page is displayed only if P.0700 parameter is different from zero.

Some engine measures acquired by CAN-BUS are shown in this page. The number and type of available measures depend on the engine type. Not available measures are shown with dashes. This page shows the following measures

- Alternator left/rear bearing temperature (SPN_1122).
- Alternator right/front bearing temperature (SPN_1123).
- L1 alternator coil temperature (SPN_1124).
- L2 alternator coil temperature (SPN_1125).
- L3 alternator coil temperature (SPN_1126).
- “Injector Timing Rail Pressure” (SPN_156).

6.3.9.9 E.09 CAN-BUS 6

This page is displayed only if P.0700 parameter is different from zero.

Some engine measures acquired by CAN-BUS are shown in this page. The number and type of available measures depend on the engine type. Not available measures are shown with dashes. This page shows the following measures

- Engine nominal power (SPN_166).
- Engine rated rotation speed (SPN_189).
- Only for MTU engines, equipped with SMARTCONNECT controller: the board displays the diagnostic codes.
- Average fuel consumption (SPN_1029).
- Partial fuel consumption (SPN_182).

6.3.9.10 E.10 EXTERNAL MEASURES 1

6.3.9.11 E.11 EXTERNAL MEASURES 2

6.3.9.12 E.12 EXTERNAL MEASURES 3

These pages are dedicated to the displaying of the measurements acquired from the analogue inputs configured as "generic sensor". The operator has the option to acquire measures that

are not in any way linked to the board, and to show them on the display. It can also group them (by any standard), and display them on one of the 3 available pages.

The division of the measures on the different pages is done via the function configured in the analogue inputs:

- AIF.2001: display on E.07 page.
- AIF.2003: display on E.08 page.
- AIF.2005: display on E.09 page.

HT GCxxx shows a measure per line: it shows the text configured for the analogue input (P.4002 for the analogue input 1), followed by the measure. If more than 7 measures are associated to one of these pages, HT GCxxx shows all of them, by rotating them on the display every two seconds: hold down the SHIFT key to stop the rotation on the current view.

6.3.10 (H.XX) Events and history logs.

This mode allows the displaying of all the records managed by the board. See the paragraph 8 for detailed information on records.

7. Programming

The controller manages a high number of parameters that allow the manufacturer, the installer or the final user to configure it in order to adapt it to specific system requirements. This document doesn't include the list of parameters (even if they are all mentioned in the description of the various functions of the board), but we refer to [1] and [2] documents that detail them. In this document the general programming structure and the operating procedure to read and/or modify parameters are described.

⚠ **WARNING**: **Assigning an incorrect value to one or more parameters can cause malfunctions, damage to things and/or injury to people. The parameters must only be changed by qualified personnel. Parameters can be password protected (refer to par.7.1.2).**

7.1 General structure

7.1.1 Organization

To each parameter are associated:

- A three/four digit numeric code (allowing identification independently of the selected language).
- A description, varying according to the selected language.
- A level of protection (see next paragraph).

Parameters are grouped in menus, organized in a tree structure (a menu can contain more menus). To each menu are associated:

- A numeric code. In case of secondary menus, the code consists of the main menu code, plus a dot and its own code.
- A description, varying according to the selected language.

7.1.2 Protection

Access to programming mode can be controlled through four different protection levels, listed in priority order.

- SICES password (only GX5xx).
- MANUFACTURER password
- INSTALLER password
- USER password

Each parameter of the board is associated with a level of protection (in the documents [1] and [2] this combination is indicated in the column "ACC" with a letter "S" to indicate SICES level, "C" for the manufacturer, "I" for the installer and "U" for the user).

A parameter associated with SICES level can only be modified by setting SICES password. A parameter associated with the manufacturer's level can be modified by the same manufacturer (or with SICES password). A parameter associated with the installer's level can be changed by the manufacturer and the installer (and with SICES password). A parameter associated with the user's level can be changed by the manufacturer, the installer and the user (and with SICES password).

The general rule provides that parameters can only be modified when the controller board is in “OFF/RESET”. Some parameters are an exception and can be modified regardless of the status of the controller board, including with the engine running. As a general rule, if a

parameter cannot be modified, it will be enclosed between < and > while, if it can be modified, it is enclosed between [and] : that is, valid also for the restrictions due to password.

If the operator has to modify a parameter, he/she must input first the proper password in the parameter P.0000 (1 - System"), so that the controller can recognize it as "Manufacturer", "Installer" or "End User". After completing this operation, it will be possible to modify the required parameters. The access code entered remains saved in P.0000 for about 10 minutes since the end of programming. After this time, the code is automatically reset to zero and must be re-entered to access programming again.

It is possible to customize the password by using P.0001 (manufacturer), P.0002 (installer) and P.0003 (user) parameters, available in the 1 - System menu. Value "0" for these parameters means no password set. **SICES** password, on the other hand, is a special password, pre-assigned at the factory and supplied with the board (see par. 7.1.3).

If a password gets lost, it is possible to reconfigure it by logging in with the higher-level password. This is the reason why we recommend to set at least the "Manufacturer" password (P.0001): actually, in case someone else sets up this password, or a lower level one (even unwillingly) without providing information, no parameter modification will be possible anymore. On the other hand, knowing the "manufacturer" password will allow to cancel or modify the other passwords. Contact our service centre if the "manufacturer" password is lost.

The following examples show all the combinations for passwords assignment.

Example 1: P.0001=0 P.0002=0 P.0003=0

Any operator is seen as a "manufacturer", with no need of setting anything in P.0000. Therefore, all parameters, excluding critical ones, can be modified by anyone (controller's default mode).

Example 2: P.0001=0 P.0002=0 P.0003=UUU

No parameter modification is allowed. When user enters the "UUU" code in P.0000 the board consider it "manufacturer" because there is no password for "installer" and "manufacturer". After entering this code, all parameters, excluding critical ones, can be modified.

Example 3: P.0001=0 P.0002=III P.0003=UUU

No parameter modification is allowed. When entering "UUU" in P.0000, the operator is identified as "User" and is allowed to modify all parameters associated to the end user. By entering "III", the operator is identified as "installer" but, as no password is associated to the manufacturer, the controller identifies him/her as "manufacturer". After entering this code, all parameters, excluding critical ones, can be modified.

Example 4: P.0001=CCC P.0002=III P.0003=UUU

No parameter modification is allowed. When entering "UUU" in P.0000, the operator is identified as "User" and is allowed to modify all parameters associated to the end user. By entering "III", the operator is identified as "installer" and is allowed to modify all parameters associated to "installer" and "user". By entering "CCC", the operator presents himself/herself as "manufacturer", and s/he gets the authorization to modify all parameters of the board, safe for critical ones.

Example 5: P.0001=CCC P.0002=0 P.0003=0

As no password is associated to user and Installer, programming the relevant parameters is allowed without entering anything in P.0000. To modify the parameters associated to Manufacturer, simply enter "CCC" in P.0000.

Example 6: P.0001=0 P.0002=III P.0003=0

As no password is associated to user, programming the relevant parameters is allowed without entering anything in P.0000. When entering "III" in P.0000 the operator is identified as "installer" but, as no password is associated to "manufacturer", the

controller identifies him/her as "manufacturer". After entering this code, all parameters, excluding critical ones, can be modified.

Example 7: P.0001=CCC P.0002=III P.0003=0

As no password is associated to user, programming the relevant parameters is allowed without entering anything in P.0000. By entering "III" in P.0000, the operator is identified as "installer" and is allowed to modify all parameters associated to installer and user. When entering "III" in P.0000, the operator is identified as "manufacturer" and is allowed to modify all parameters, excluding critical ones.

Example 8: P.0001=CCC P.0002=0 P.0003=UUU

No parameter modification is allowed. When entering the "UUU" in P.0000, the operator is identified as user but, as no password is associated to "installer", the controller identifies him/her as "installer". Therefore, he/she is allowed to modify all controller parameters associated to installer and user. When entering "III" in P.0000, the operator is identified as "manufacturer" and is allowed to modify all parameters, excluding critical ones.

A parameter value can always be read but it can only be modified in case the P.0000 contains a proper password. Parameters P.0001, P.0002, P.0003 and P.0469 are excluded: actually, they are not displayed in case P.0000 does not contain a proper password.

P.0469 parameter (password for serial ports) can be displayed and/or modified only by directly acting on the board, having at least installer rights at disposal.

When accessing programming and setting the password (P.0000), parameters P.0001, P.0002 and P.0003 might not be immediately displayed. To enable display, return to the previous menu and then re-enter.

7.1.3 SICES password protection (HT HT GC5xx only)

Some parameters are protected by this special password: P.0802 (type of system), P.0854 (GCB mode), P.0855 (MCB mode), P.0880 (working in parallel with the mains) and P.0900 (interface device). The aim of SICES' password is to prevent changes to these parameters that could cause serious damages.

At present, two types of SICES' passwords are available: fixed and temporary.

The fixed password is supplied along with HT HT GC5xx board and is always valid.

The temporary password is supplied by SICES on justified request and depends on the specific board and a random value. After its first utilization, it remains valid for two hours of engine working. After this time span has elapsed, it is necessary require SICES a new temporary password.

To get a temporary password, the user should ask SICES by sending an e-mail totechelp@sices.eu. The e-mail should include the reasons of the request, the series number of the board (and of the panel if manufactured by SICES); besides, the univocal identifier of the board and the internal code shown on S.06 page of the board itself, should be indicated. SICES reserves the right to ascertain that the applicant is effectively qualified and authorized to perform this kind of changes.

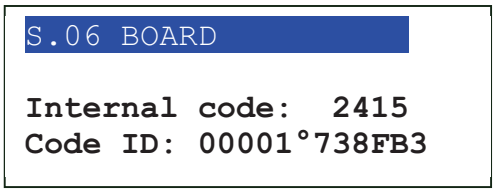

7.2 Operating procedure

In this procedure the use of the keyboard and the display for programming purposes will be described.

7.2.1 Access to programming

Programming is accessible in any controller operation status. The modification of the parameters is generally only possible with the board in OFF/RESET mode. To enter programming mode, use the ▲ and ▼ buttons till the base PROGRAMMING mode (P.03) screen is displayed. NOTE: when in a mode that limits the use of vertical scrolling buttons, you may require to press repeatedly the EXIT button (this can occur when displaying history logs or during some operations, such as setting the fuel pump control mode).

Then, press ENTER to access programming

The menu or variable selected before the last exit from programming are automatically displayed when starting the procedure (the main menu is displayed the first time you access). This is true if the programming procedure has been previously aborted by changing the operation mode of the controller board in MAN or AUTO or after maximum time with no programming operation has elapsed or keeping the EXIT button pressed for more than two seconds.

7.2.2 Menu selection

Current menu name, selected menu item and number of menu items are always displayed in the second line. Menu items (submenus) are displayed in the following lines. The selected item is highlighted in reverse. Use the ▲ e ▼ buttons to cyclically scroll through the menu to the lower and upper index items (i.e. pressing the ▲ allows to directly cycle from the first item to the last one).

Press the ENTER button to access the selected (highlighted) sub-menu. Press the EXIT button to leave the menu (back to the previous menu or to the base screen if exiting programming in the main menu).

7.2.3 Parameters selection

The name of the current menu (in the example the menu “1-SYSTEM”) is always shown in the first line, followed by the numeric Id of the selected item and the number of menu items. The following lines are used to display single parameters. In detail:

- The unambiguous parameter code (three/four digits), followed by the description in the current language, is shown in the fourth and fifth line.
- The sixth line shows the variable value, between brackets, aligned to the right side “< and >”.
- For some parameters, on the eighth line, a value is shown, which is in some way related to the actual parameter value. For example, in the case of the rated generator power, the rated plant current is shown, derived from the rated generator voltage (P. 0102) and from rated power, P.0106. Sometimes, this additional measure can be displayed for showing its absolute value, when the parameter is a percentage of other values, .

Use the ▲ e ▼ buttons to cyclically scroll through the menu to the lower and upper index items (i.e. pressing the ▲ allows to directly cycle from the first item to the last one and vice versa). Press the ENTER button to enable the parameter modification procedure (see following paragraph). Press the EXIT button to leave the menu (back to the previous menu).

7.2.4 Modify a parameter

You may only modify parameters displayed between square brackets. A parameter between symbols < and > cannot be modified. In this case it could be necessary to set a new suitable password or select OFF/RESET mode.

In case modifying the displayed parameter is allowed, press the ENTER button; the square brackets enclosing the value will blink to signal that the modification is in progress. Press again the ENTER button to confirm the new value; press the EXIT button to abort and return to the original value.

Parameter types are the following:

- **Numerics**: the value can be modified by pressing the ▲▼ buttons, in order to increase or decrease one unit from the most rightwards decimal digit (if you press the above buttons plus SHIFT, the figure will be increased or decreased by ten units at a time). The change is cyclical: increasing over the maximum value when will lead to the minimum one and vice versa.
- **Numerics selected in a pre-defined list** (for example the number of phases of the generator): same goes for the numeric parameters, considering that the ▲▼ buttons allow for passing to the fallowing/previous value in the pre-defined list (pressing the above buttons plus SHIFT, you go to the value ten units after/before the current one).
- **Numerics selected in a number-string couples list** (e.g. the type of pressure sensor): same as the previous point.
- **Time**: arameters: same as numerical parameters, with one exception: the controller manages the increment/decrement maintaining valid values (example: increasing from “00.59”, the value goes to “01.00” and not to “00.60”).
- **Strings** (e.g. telephone numbers): in this case the display shows also a cursor indicating the currently selected character in the string. The▲▼ buttons work on the selected character (passing to the one after/before in the ASCII table. If you press the above buttons plus SHIFT, you will move to the one 10 units before/after). The ◄► buttons allow to select the character to be modified. NOTE: you can only set the ASCII characters from 32 (Space) to 127 (Escape). It is not possible to set extended ASCII characters (over 127) and the control ones (from zero to 31).
- **Hexadecimal strings** (e.g. output bitmaps): same as for the string parameters, but the selectable characters are only ”0-9” and “A-F” (only capitals).
- **Bits**: Some parameters are managed with bits. Each bit set to 1 enables a function and each bit set to 0 disables a function. They can be used up to 16 bits. A hexadecimal value is assigned to each bit. The parameter should be set with the result of the sum of the hexadecimal values associated with functions that should be enabled. The layout is the same as described for hexadecimal strings.

  The description of these parameters is shown in a table like the one below:

Bit	Value	Description
1	0001	Enable function 1
2	0002	Enable function 2
3	0004	Enable function 3
4	0008	Enable function 4
5	0010	Enable function 5
6	0020	Enable function 6
7	0040	Enable function 7
8	0080	Enable function 8
9	0100	Enable function 9

10	0200	Enable function 10
11	0400	Enable function 11
12	0800	Enable function 12
13	1000	Enable function 13
14	2000	Enable function 14
15	4000	Enable function 15
16	8000	Enable function 16

In case the operator wants:

- To disable all functions: he/she must set to 0000 the relevant parameter.
- Enable 1 to 8 functions: the value to be set is given by the hexadecimal sum 0001+0002+0004+0008+0010+0020+0040+0080 = 00FF.
- Enable, for example, the functions 3, 4, 6 and 8: the value to be set is the sum 0004+0008+0020+0080 = 00AC.

7.2.5 Set up limits

The operator has not to worry about verifying that the set up value is acceptable for the controller since it is not possible to set up not acceptable values. Obviously, this is only true for individual parameters. However, it is possible to set two or more parameters in incongruent or incompatible ways. It is up to the operator to prevent this from occurring.

7.2.6 Exit from programming

There are three ways to exit programming mode:

- Press the EXIT button 'n' times to scroll back to the main menu, then press it again to exit programming. On the following access to the programming the main menu will be shown.
- Hold EXIT key pressed for two seconds from any position: you will immediately exit the programming and on the next access to programming you will find yourself at the same point.
- Change the board working mode to AUTO or MAN: at the following access to the programming you will find yourself at the same point.

7.2.7 Loading default values

⚠ **WARNING: This procedure permanently recharges the parameters with the factory default (depending on access rights).**

Sometimes, it may be useful to reload parameters factory values. To do so, first access programming, then press and hold the ENTER and EXIT buttons simultaneously for five seconds. Reload of factory values will be confirmed by a message on the display.

NOTE: factory values are reloaded only for parameters for which you are granted access rights.

7.3 Indicative notes

This paragraph includes some general notes for the programming.

Three basic menus are provided in order for the controller to learn the plant.

- 1-SYSTEM menu, first of all, allows indicating the way the board is connected to the engine and to the generator: single-phase or three-phase connection (P.0101 generator, P.0119 mains), type of used current transformers (P.0107), contingent

presence and type of sensor for engine speed (P.0110, P.0111 and P.0127), possible presence and type of oil-pressure, coolant-temperature and fuel-level transducers (P.0112, P.0113 and P.0114) and, in the end, possible presence of D+ signal (P.0115). Besides, it allows setting the rated characteristics of electric quantities: voltage (P.0102 and P.0116), frequency (P.0105), power (P.0106 and P.0125), etc. It is fundamental to set these parameters correctly, because almost all thresholds for the activation of protections are expressed in percentage values of them. **Only for HT HT GC5xx, in this menu it is possible to indicate if mains voltages or parallel bar voltages (P.0126) are connected to JF connector.**

- Working sequence configuration can be modified through the menu 2-SEQUENCE.
- Protections management is accessible through the menu 3-PROTECTION. As to this, it is important to know that, in order to enable/disable a protection, you may simply modify the associated time, leaving the threshold unchanged: by setting the time to zero, the protection is disabled. However, this general rule provides some exceptions. For a description of individual disable modes, refer to the chapter about anomalies.
- All operations not related to system, sequence and protections configuration, can be performed through the menu 4-AUXILIARY FUNCTIONS.
- 5-I/O menu allows indicating to the board the way its configurable digital inputs and outputs are used.

  WARNING! An incorrect configuration of functions associated to inputs can cause (in the worst case) the activation of false anomalies. On the contrary, the incorrect configuration of the output could even cause damages. Pay attention to the configuration.

- 7-CAN-BUS menu allows configuring the way the board has to dialogue on CAN0 CAN-BUS to get measures from the ECU of the engine and in case to send controls.
- "8-PARALLEL MANAGEMENT" menu allows configuring all functions that concerns parallel among generators or with the mains (synchronization, load distribution, power modulation, management of the power factor, load management, etc.). This menu is only available for HT HT GC5xx.

7.4 AND/OR logics.

The AND/OR logics are, basically, a list of boolean conditions (true/false, on/off, 1/0), which can be configured by the operator (programming), which the controller evaluates and the result of which can be assigned to a digital output. For using the AND/OR logics with a digital output, use the DOF.0103 function.

WARNING: the AND/OR logics cannot be configured directly from the panel of the controller, but through a PC equipped with the BoardPrg3 software (see [14]).

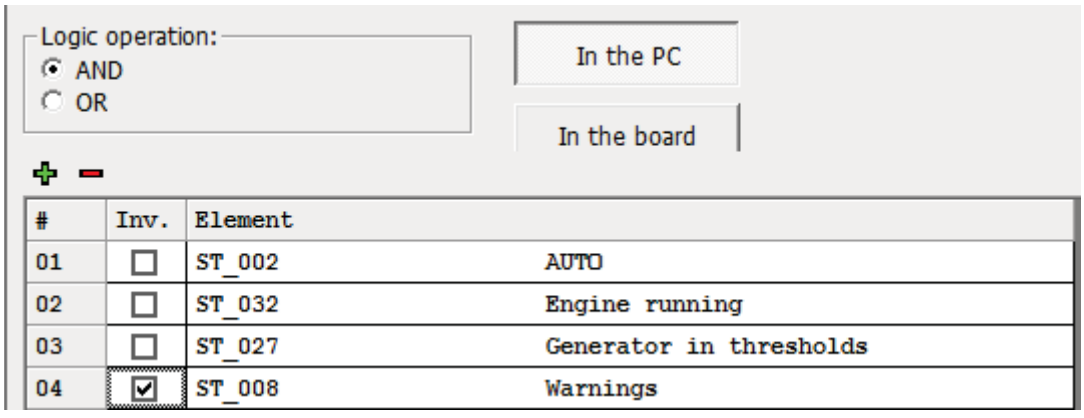

#	Inv.	Element	
01	☐	ST_002	AUTO
02	☐	ST_032	Engine running
03	☐	ST_027	Generator in thresholds
04	☑	ST_008	Warnings

The operator must first decide if the list of conditions must be evaluated as AND (all must be checked) or as OR (it is enough that one condition is met). It is not possible to have AND/OR mixed logics.

You can add up to 30 conditions. Each condition can be individually denied: in the previous figure, for example, the board will check that there are no active early warnings. The following conditions can be added:

- DI_XXX: logic states of all the digital inputs (physical or virtual).
- DO_XXX: logic states of all the digital outputs.
- AL_XXX: warnings/locks present.
- ST_XXX: internal states of the controller.
- AT_XXX: states concerning the thresholds on analogue measures (see paragraph7.8).

The following table shows the list of the internal states available for the AND/OR logics.

Status	Only HT HT GC5xx	Description
ST.000		OFF/RESET
ST.001		MAN
ST.002		AUTO
ST.003		TEST
ST.004		REMOTE START
ST.008		Warnings cumulative
ST.009	X	Deactivations discharges
ST.010		Deactivations cumulative.
ST.011		Locks cumulative
ST.012		Unacknowledged warnings cumulative
ST.013	X	Unacknowledged discharges cumulative
ST.014		Unacknowledged deactivations cumulative
ST.015		Unacknowledged locks cumulative
ST.016		Mains voltage/frequency present.
ST.017		Mains out of tolerance or absent
ST.018		Delay for mains within tolerance.
ST.019		Mains in tolerance
ST.020		Delay for mains out of tolerance or absent
ST.024		Generator voltage/frequency present
ST.025		Generator out of tolerance or absent
ST.026		Delay for generator within tolerance.
ST.027		Generator in tolerance
ST.028		Delay for generator out of tolerance or absent
ST.032		Engine started
ST.033		Oil protections enabled
ST.035		Engine sequence: standby
ST.036		Engine sequence: starting
ST.037		Engine sequence: low speed
ST.038		Engine sequence: delay before power delivery
ST.039		Engine sequence: ready to deliver
ST.040		Engine sequence: cooling
ST.041		Engine sequence: arrest

ST.048	X	Presence of bar voltages
ST.052	X	Active mains parallel protections (no mains)
ST.053	X	Active 27 protection
ST.054	X	Active 59 protection
ST.055	X	Active 81< protection
ST.056	X	Active 81> protection
ST.057	X	Active ROCOF protection
ST.058	X	Active VECTOR JUMP protection
ST.064		GCB status
ST.065		MCB status
ST.066	X	MGCB status
ST.068		Commands GCB
ST.069		Commands MCB
ST.080		Inhibition of the start from contact
ST.081		Inhibition of the start from clock/calendar
ST.082	X	Starting inhibition from load function
ST.083	X	Starting inhibition because it is not possible to deliver stand alone and there is no mains
ST.084	X	Starting inhibition because another generator has GCB not open
ST.088		Inhibition of the GCB closing from contact
ST.089	X	GCB closing inhibition because it is not possible to deliver stand alone and there is no mains
ST.090		Inhibition of the GCB closing from serial port
ST.091	X	GCB closing inhibition because another generator has GCB not open
ST.092	X	GCB closing inhibition because a returning synchronization is ongoing
ST.093	X	GCB closing inhibition from MC100 board
ST.096		Ready to deliver
ST.097	X	Input synchronization
ST.098	X	Returning synchronization
ST.100	X	Loading phase.
ST.101	X	Unloading phase.
ST.102	X	Production in parallel with mains.
ST.103	X	Supplying in parallel among generators
ST.104		Stand-alone supplying
ST.111	X	No MC100 on PMCB bus

7.5 Digital input configuration

HT GC310 board has eight standard opto-insulated digital inputs. HT GC350, HT GC500 and HT GC500^{Plus} boards have eighteen standard opto-insulated digital inputs.

Moreover, all boards can manage a DITEL module, with sixteen (opto-insulated) digital inputs. Use P.0141 parameter to configure the presence of DITEL module.

In case these inputs aren't enough, it is possible to use, as digital inputs, also terminals 2, 3 and 4 of JM connector, usually used as analogue inputs: of course if they are used as digital inputs, the relevant analogue measures will not be available. To use analogue inputs as digital inputs it is necessary to use AIF.0099 function (“Digital input”) in the following parameters:

- P.0112 for terminal JM-3.

- P.0113 for terminal JM-4.
- P.0114 for terminal JM-2.

For the connection of digital inputs and analogue inputs used as digital inputs refer to initial paragraphs.

Finally the boards manage sixteen virtual digital inputs. For the virtual digital inputs see 7.5.2.

All the inputs are fully configurable

As default, all the inputs are “active” only when the related terminal is connected to the negative of the supply voltage of the board; they are considered “not active” when the terminal is left open.

With BoardPrg3 the logic reversal of the input can be achieved simply by selecting the “Reversed polarity” box on the configuration page of the individual input. The box doesn't appear if the input is configured as DIF.0000 – “Unused”.

But it is possible to reverse this convention (individually for each input) also by acting directly on the device by means of suitable parameters:

Parameter	Inputs
P.0501	01...08
P.0531	09...18
P.0570	Analogue inputs used as digital ones
P.2200	DITEL #01

As you can see, there is no parameter to "reverse the polarity" of virtual digital inputs (it is not possible). The above parameters have a bit for each input:

- A bit set to zero means that the related input is “active” when it is connected to the negative supply of the controller.
- A bit set to one means that the related input is considered “active” when it is left open (connecting the input to ground will change to “not active” the status).

As default, all the bits are set to 0.

Each input (both physical and virtual) has three parameters associated:

- One parameter which configures its function (P.0507 for input 1).
- One parameter which configures any delay (P.0508 for input 1).
- One parameter allows to define a text message to display. (P.0509 for input 1).

See documents [1] [2] for the parameters list.

The parameters which configure the delay and the message for an input are used by the controller only for certain features of the inputs.

7.5.1 Functions configurable on digital inputs

Code	Function	Note	Delay	Message	Description
DIF.0000	Not used.				The input is not used.
DIF.0001	Warning		Yes	Yes	If the input is active, a warning is issued: the message shown is the one set by means the related “text” parameter.
DIF.0002	Deactivation		Yes	Yes	When the input is active a deactivation is induced: the text displayed is the one set in the parameters associated to the input.

DIF.0003	Alarm		Yes	Yes	When the input is active a shutdown is induced: the text displayed is the one set in the parameters associated to the input.
DIF.0004	Shutdown with oil masking		Yes	Yes	When the input is active, if the time span from the starting of the engine, configured through P.0216 parameter, has elapsed, a shutdown is induced: the displayed text is the one set in the parameters associated with the input If DIF.0059 function – “Engine protection override” is active, an early warning is induced instead of a shutdown.
DIF.0005	Reset instruction				When the input becomes active, the controller executes a reset of all anomalies. That is equivalent to change the controller mode to OFF/RESET and back again to the working mode.
DIF.0006	MCB mains contactor status		Yes		An input configured in this way is used to activate early warnings in the event of a discrepancy between the controls to the switch given by the board and the status of the same switch. Warning can be also issued in this case or, even, depending on the configuration, the gen-set can be started in case of MCB closure failure. For HT HT GC5xx controller, this status is used for the logic related to the parallel. It is also used to detect the status of the circuit breaker when it is commanded by external devices.
DIF.0007	Generator circuit breaker GCB status		Yes		An input configured in this way is used to activate the early warnings/alarms in the event of a discrepancy between the controls to the switch given by the board and the status of the same switch.
DIF.0008	Minimum fuel level		Yes		When the input is activated a shutdown with a fixed description (depending on the language) is generated. This function can be also used for the “Fuel pump management” (see par. 10.5.11).
DIF.0009	Low fuel level		Yes		When the input is activated an early warning with a fixed description (depending on the language) is generated. This function can be also used for the “Fuel pump management” (see par. 10.5.11).
DIF.0010	Fuel level for pump starte				If the input is “active” the fuel pump is started (see par. 10.5.11)
DIF.0011	Fuel level for pump stop.				If the input is “active” the fuel pump is stopped (see par. 10.5.11)
DIF.0012	High fuel level		Yes		When the input is activated an early warning with a fixed description (depending on the language) is generated. This function can be also used for the “Fuel pump management” (see par. 10.5.11)
DIF.0013	Minimum oil pressure		Yes		When the input is active, if the time span from the starting of the engine, configured through P.0216 parameter, has elapsed, a shutdown with a fixed description (depending on the language) is generated.
DIF.0014	Low oil pressure		Yes		When the input is active, if the time from engine start set with P.0216 parameter has elapsed, an early warning with fixed description (depending on the language) is generated.
DIF.0015	High coolant temperature		Yes		When the input is active, if the time from engine start set with P.0216 parameter has elapsed, an early warning with fixed description (depending on the language) is generated.
DIF.0016	Maximum coolant temperature		Yes		When the input is active, if the time from engine start set with P.0216 parameter has elapsed, an early warning with fixed description (depending on the language) is generated.

DIF.0017	Overload		Yes		Normally, the “tripped” contact of the machine protection breaker is connected to this input. When the input is activated a shutdown with a fixed description (depending on the language) is generated.
DIF.0018	Overspeed		Yes		When the input is activated a shutdown with a fixed description (depending on the language) is generated.
DIF.0019	Early warning with oil masking		Yes	Yes	When the input is active, if the time span from the starting of the engine, configured through P.0216 parameter, has elapsed, an early warning is induced: the text displayed is the one set in the parameters associated to the input
DIF.0021	Early warning with gas masking		Yes	Yes	When the input is active, if an output with the DOF.0014 function - "Gas valve" is active, an early warning is induced: the displayed text is the one set in the parameters associated with the input
DIF.0022	Shutdown with gas masking		Yes	Yes	When the input is active, if an output with DOF.0014 function - "Gas valve" is active, a shutdown is induced: the displayed text is the one set in the parameters associated with the input
DIF.0023	Fuel solenoid masked warning”.		Yes	Yes	When the input is active, if the control for the fuel electromagnetic valve (JH_03) is active, an early warning is induced: the displayed text is the one set in the parameters associated with the input
DIF.0024	Shutdown with fuel solenoid valve masking		Yes	Yes	When the input is active, if the control for the fuel electromagnetic valve (JH_03) is active, a shutdown is induced: the displayed text is the one set in the parameters associated with the input.
DIF.0026	Remote test request.				When the input is "active", the mode of the board switches from AUTO to TEST (the input does nothing if the board is not in AUTO or if the automatic intervention of the generator is required). When it becomes inactive, the status changes back to AUTO.
DIF.0027	Remote test request.		Yes		If the input is “active”, the controller operating mode changes from AUTO to REMOTE START(the input does nothing if the controller is in OFF/RESET or MAN mode). When it becomes inactive, the status changes back to AUTO.
DIF.0028	Emergency stop		Yes		This input is used to signal to the control an emergency stop. When the input is "not active" a shutdown with a fixed description (depending on the language) is generated.
DIF.0029	Remote start enabling				If this function is defined for one input, “REMOTE START” function is inhibited if the input is not active.
DIF.0030	Inhibition of switching of users to the generator				In automatic mode, when this input is “active”, the loads are changed-over to the mains, even when the mains is missing.
DIF.0031	Early warning with GCB masking		Yes	Yes	When the input is active, if GCB control is active, an early warning is generated: the displayed text is the one set in the parameters associated with the input.
DIF.0032	Shutdown with GCB masking		Yes	Yes	When the input is active, if GCB control is active, a shutdown is generated: the displayed text is the one set in the parameters associated with the input.
DIF.0033	Load Function Enable	HT HT GC5xx			It is used to enable/disable the “load function” when the generator works in parallel with other generators. **Available only with HT HT GC5xx.**
DIF.0034	Fuel pump early warning		Yes	Yes	If the input is active, a warning is issued: the message shown is the one set by means the related “text” parameter. The controller blocks the fuel pump as long as this input is “active”

DIF.0035	Low speed request.				When this input is “active”, the controller disables the minimum frequency and minimum voltage protections of the generator, because it assumes that the engine is running at a speed lower than the usual. The controller also prevents the change-over of the loads to the generator. In the case of certain CAN-BUS engines, the controller also controls the reduced rotational speed of the engine
DIF.0036	Status of general switch of generators	HT HT GC5xx			It acquires the status of MGCB switch (connecting the parallel bar of generators to the users). If the input is active, the board considers the switch as closed. **Available only with HT HT GC5xx.**
DIF.0037	General status			Yes	If the related input is active, the controller will show the text defined by the related text parameter on page S.03 of the display.
DIF.0038	Import/Export mode selection.	HT HT GC5xx			When working in parallel to the mains in “BASE LOAD” mode, the activation of this input switches the power management mode to “IMPORT/EXPORT” (the difference is that in “BASE LOAD” mode you select the power the generator has to produce, while in “IMPORT/EXPORT” mode you select the power that has to be imported/exported to the mains). **Available only with HT HT GC5xx.**
DIF.0039	Parallel to the mains protections status	HT HT GC5xx			Allows connecting the contact of an external protection that detects the “loss of mains” while the generator is in parallel to the mains itself. The input must be active when the mains is present. **Available only with HT HT GC5xx.**
DIF.0040	Inhibition				When the input is “active”, the automatic start of the engine is inhibited. For this function, the parameters “Delay” and “Message” are not used, whatever their value. The “REMOTE START” mode is not influenced by this function
DIF.0041	Power discharge + deactivation	HT HT GC5xx	Yes	Yes	When the input is active, a deactivation is generated. Before opening GCB switch, the power delivered by the generator is gradually reduced to zero (this is possible only if the generator is in parallel with the mains or other generators). The message shown is the one set by means of the related parameters. **Available only with HT HT GC5xx.**
DIF.0042	Deactivation with oil mask		Yes	Yes	When the input is active, if the time span from the starting of the engine, configured through P.0216 parameter, has elapsed: the displayed text is the one set in the parameters associated with the input. If "Engine protections override" function is activated, an early warning instead of a deactivation is generated.
DIF.0043	Power discharge + deactivation with oil masking	HT HT GC5xx	Yes	Yes	When the input is active, if the time span from the starting of the engine, configured through P.0216 parameter, has elapsed, a deactivation is generated. Before opening GCB switch, the power delivered by the generator is gradually reduced to zero (this is possible only if the generator is in parallel with the mains or other generators). The message shown is the one set by means of the related parameters. If an input is activated with DIF.0059 - "Engine protections override" function, an early warning instead of a deactivation is generated. **Available only with HT HT GC5xx.**
DIF.0044	Deactivation with gas mask		Yes	Yes	When the input is active, DOF.0014 control - "Gas valve" is active, a deactivation is generated: the displayed text is the one set in the parameters associated with the input.

DOF.0045	Power discharge + deactivation with gas masking	HT HT GC5xx	Yes	Yes	When the input is active, if DOF.14 control - "Gas valve" is active, a deactivation is generated . Before opening GCB switch, the power delivered by the generator is gradually reduced to zero (this is possible only if the generator is in parallel with the mains or other generators). The message shown is the one set by means of the related parameters. **Available only with HT HT GC5xx.**
DIF.0046	Deactivation with fuel solenoid valve masking		Yes	Yes	When the input is active, if the fuel solenoid valve control is active, generally a deactivation is generated: the displayed text is the one set in the parameters associated with the input.
DIF.0047	Power discharge + deactivation with fuel solenoid valve masking	HT HT GC5xx	Yes	Yes	When the input is active, if the fuel solenoid valve control (JH_03) is active, a deactivation is generated. Before opening GCB switch, the power delivered by the generator is gradually reduced to zero (this is possible only if the generator is in parallel with the mains or other generators). The message shown is the one set by means of the related parameters. **Available only with HT HT GC5xx.**
DIF.0048	Deactivation with GCB mask		Yes	Yes	When the input is active, if GCB control is active, generally a deactivation is generated: the displayed text is the one set in the parameters associated with the input.
DIF.0049	Power discharge + deactivation with GCB masking	HT HT GC5xx	Yes	Yes	When the input is active, if GCB control is active, generally a deactivation is generated. Before opening GCB switch, the power delivered by the generator is gradually reduced to zero (this is possible only if the generator is in parallel with the mains or other generators). The message shown is the one set by means of the related parameters. **Available only with HT HT GC5xx.**
DIF.0050	Absence of voltage on the parallel bars.	HT HT GC5xx			When the input is active, it indicates that there is no voltage on the parallel bars. **Available only with HT HT GC5xx.**
DIF.0051	Autoproduction line open.	HT HT GC5xx			This function is used to indicate that an external switch is open, and therefore the mains is disconnected from the parallel bars. Used only for parallel systems with the mains. It activates a shutdown. **Available only with HT HT GC5xx.**
DIF.0052	Request of switching-back synchronization from outside	HT HT GC5xx			This function is used in parallel systems with the mains, where MCB switch is not controlled by HT HT GC5xx, but the synchronizer HT HT GC5xx can be exploited to close this switch. The active input indicates that the board should perform synchronization. **Available only with HT HT GC5xx.**
DIF.0053	Request of load distribution from outside	HT HT GC5xx			This function is used in parallel systems among generators, where there is an external device for load splitting and HT HT GC5xx has no way to know if it is in parallel with another generator. The activation of this input indicates to HT HT GC5xx that it is in parallel with another generator, and that the signal coming from the external load splitter to change engine speed should therefore be used. **Available only with HT HT GC5xx.**
DIF.0054	GCB close manual command.	HT HT GC5xx			It works only in MAN and TEST; it is equivalent to pressing "KM/KG" (or "GCB") key to switch the loads onto the generator. If there is no input with the function DIF.0055, it acts as “toggle”: it controls the opening of the breaker when the same is closed and vice versa

DIF.0055	GCB open manual command.				It works only in MAN and TEST; it is equivalent to pressing "KM KG" (or "GCB") key to switch the loads onto the mains.
DIF.0056	Status of GCBs of other generators	HT HT GC5xx			This function is used in parallel systems among generators, where there are generators not connected to PMCB bus. The active input indicates that at least one GCB switch of the generators that does not communicate on PMCB is closed. **Available only with HT HT GC5xx.**
DIF.0058	Power control disabling	HT HT GC5xx			This function is used in parallel systems where, in some conditions, active and reactive power control is performed by external devices. If the input is active, the board disables internal power regulators and power factors: rpm. and voltage regulators are controlled according to speed and tension references. Since these references may be acquired by the analogue inputs, the external device that controls powers is able to work by acting on these analogue inputs. **Available only with HT HT GC5xx.**
DIF.0059	Engine protections override				When the input is “active”, all the protections for the engine, which normally act as interlock, discharge or deactivation elements, become mere warnings
DIF.0060	External mains sensor.				When the input is “active” the mains is considered to be “in tolerance” (see 10.2).
DIF.0061	DROOP request	HT HT GC5xx			When this input is active, HT HT GC5xx disables the traditional power controls (power modulation in parallel with the mains and load distribution in parallel among generators) and uses the DROOP function to adjust power. This function consists in controlling a speed regime inversely proportional to the supplied power (typically at zero power the generator will work at 52 Hz, at full load will work at 48 Hz). **Available only with HT HT GC5xx.**
DIF.0062	Selection of pilot group	HT HT GC5xx			This function is used only in parallel systems among generators, and only if the loading function is enabled. When the input is activated, the generator becomes the "pilot" or "master" of the loading function: in short, it becomes the highest-priority generator that will never be turned off, whatever the power absorbed by the users may be. **Available only with HT HT GC5xx.**
DIF.0063	1800 rpm selection				It only makes sense for some "CAN-BUS" engines: it allows switching rpm speed from 1500 to 1800. See [11].
DIF.0064	Select configuration 1.				When the input becomes "active", parameters of alternative configuration set 1 are copied in the working configuration.
DIF.0065	Select configuration 2.				When the input becomes "active", parameters of alternative configuration set 2 are copied in the working configuration.
DIF.0066	Select configuration 3.				When the input becomes "active", parameters of alternative configuration set 3 are copied in the working configuration.
DIF.0067	Select configuration 4.				When the input becomes "active", parameters of alternative configuration set 4 are copied in the working configuration.
DIF.0068	Important generic status			Yes	If the related input is active, the controller will show the text defined by the related text parameter on page S.03 of the display. In addition, the display is forced on "S.03" page.

DIF.0069	Disabling of auxiliary power protection				When this input is “active” the auxiliary current protection (normally used for differential protection) is disabled.
DIF.0070	70 – Immediate supply.	HT HT GC5xx			This function is used in combination with the outputs for the control of an external switching (DOF.0070 and DOF.0071) in parallel systems among generators. Normally this switching connects generators to users when generator power is not sufficient to supply them: if this input is active, users are connected to generators when at least one generator has closed its GCB. **Available only with HT HT GC5xx.**
DIF.0071	MCB close manual command.	HT HT GC5xx			Only acts in MAN and in TEST, used to control the manual closure of the MCB breaker. If there is no input configured with the function DIF.0072,, this input works in reality as toggle: it commands the closure of the breaker when the same is open and commands the opening when the same is closed. **Available only with HT HT GC5xx.**
DIF.0072	MCB open manual command.	HT HT GC5xx			Only acts in MAN and in TEST, used to control the manual opening of the MCB breaker. **Available only with HT HT GC5xx.**
DIF.0073	Alarm subject to OVERRIDE		Yes	Yes	When the input is active, normally a shutdown is generated. If the "engine protections OVERRIDE" function is active, an early warning is generated. The message shown is the one set by means of the related parameters.
DIF.0074	Disable the protections on the analogue measures.				When the input is active, any shutdowns associated with analogue measures become early warnings.
DIF.0075	Load thresholds enabling				If the input is not active, the management of load thresholds (described in 12.6) is disabled
DIF.0077	According to power setpoint.	HT HT GC5xx			Used only in applications of parallel with the mains, when "BASE LOAD" mode is selected to adjust power. Normally the used power setpoint is set with P.0884 parameter. If this input is active, you will shift (with power loading and unloading) to the setpoint set by P.0902 parameter. **Available only with HT HT GC5xx.**
DIF.0078	OFF/RESET by remote control.				When this input is active, the operation mode of the controller is forced into OFF/RESETand you cannot use the buttons on the panel to change it. See 10.1. When this input is turned off, if there are no inputs configured with 79 and 80 functions, the operating mode comes back to the one it was before the activation of the input.
DIF.0079	MAN by remote control:				When this input is active, the operation mode of the controller is forced into MAN and you cannot use the buttons on the panel to change it. See 10.1.
DIF.0080	AUTO by remote control.				When this input is active, the operation mode of the controller is forced into AUTO and you cannot use the buttons on the panel to change it. See 10.1.

DIF.0081	Complete protections override.				When a digital input configured with this function is active, all the protections of the board become early warnings, except for: - Emergency button. -Manual stop command in automatic mode. - Overspeed (from contact, from rpm, from frequency and from CAN-BUS). -Short circuit
DIF.0085	Increase speed	HT HT GC5xx			Only HT GC3XX. If the input is active, CAN-BUS engine speed decreases only with running engine. With stopped engine the speed value, if referred to P.0702 parameter "Engine speed fine tuning". Speed variation loading and unloading phase is set with P.0712 parameter "Loading and unloading phase for Up/Down Controls" in %/s.
DIF.0086	Reduce speed	HT HT GC5xx			Only HT GC3XX. If the input is active, CAN-BUS engine speed decreases only with running engine. With stopped engine the speed value, if referred to P.0702 parameter "Engine speed fine tuning". Speed variation loading and unloading phase is set with P.0712 parameter "Loading and unloading phase for Up/Down Controls" in %/s.

DIF.2096	Transfer to the generators.	HT HT GC5xx			**Only HT HT GC5xx** The activation of this input determines the transfer of the power load onto the generator and the opening of **MCB** mains switch. The generator, in the automatic mode, in motion and at full speed, will be synchronized with the mains, with a consequent closure of **GCB** switch for the parallel with the mains. After closing **GCB**, the generator will start increasing power (power loading and unloading phase, maximum parallel time) up to the set power value. Power load can be essentially performed in two modes: Base Load: In this case, the power that the generator has to supply is determined by the value set by **P.0884** parameter value "Base Load power reference" "**HT HT GC5xx** or via configured analogue input. Once reached the Base Load value or anyway not later than the maximum set time for the parallel with the mains, the board will control the opening of MCB switch, even if base the Load value has not been reached. It is advisable to carefully estimate the Base Load value to be set, in order to avoid power overloading to the engine during the opening of MCB switch. Import/Export. In this case, the power that the generator has to supply is determined by the value set by **P.0904** parameter value "Import/Export minimum power" **HT HT GC5xx** or via configured analogue input. To have a correct reference of power it is necessary to have a TA placed on phase L1 of the mains that allows reading the power supplied on the mains or an external device that will generate an analogue output proportional to the power on the mains. Once reached the Import/Export value or anyway not later than the maximum set time for the parallel with the mains, the board will control the opening of **MCB** switch, even if the Import/Export value has not been reached. To get a power load without putting power into the mains, during the parallel with the mains, **P.0904** parameter should be set to 0. The deactivation of the input activates the switching back to the mains. The sequence is the contrary of power load with the first synchronization phase, closing of MCB switch and discharge of power on the mains and afterwards opening of GCB switch. ***Information! : The start and stop sequence of the generator is determined by other parameters and/or operating logics.***
DIF.2241	Fuel pump in MAN-OFF mode.				If the input is active, the tank-filling fuel pump mode is in MAN-OFF. The pump is turned off (see par. 10.5.11)
DIF.2242	Fuel pump in MAN-ON mode.				If the input is active, the tank-filling fuel pump mode is in MAN-OFF. The pump stops only when the tank is full (see par. 10.5.11)
DIF.2243	Fuel pump in AUTO mode.				If the input is active, the fuel pump mode for the filling of the tank is in AUTO. The pump starts and stops according to the level of the tank (see par. 10.5.11)

DIF.2710	It enables the acquisition of the setpoint for the BASE LOAD from analogue input	HT HT GC5xx			From rev. 1.28. The activation of this input allows acquiring the power setpoint value between the analogue value acquired from the digital input (potentiometer, analogue input from external device, etc..) and the set value in P.0884 parameter "Power reference for Base Load", expressed in kW. **Available only with HT HT GC5xx.** ***Information! If the input is not configured with this function, the power set point is acquired by default from the analogue input, if enabled, otherwise from the value of P.0884 parameter "Power reference for the Base Load".***
DIF.2711	It enables the acquisition of the speed reference from analogue input	HT HT GC5xx			From rev. 1.28. The activation of this input allows acquiring the speed value between the analogue value from analogue input (potentiometer, analogue input from the external device, etc ...) and the value set in P.0840 parameter "Speed reference" expressed as a percentage %. **Available only with HT HT GC5xx.** ***Information! If no input is configured with this function, the speed reference is acquired by default only by the analogue input, if enabled, otherwise from the value of P.0840 parameter "Speed Reference %".***
DIF.3005	Status of the neutral earthing remote-control switch (NECB).	HT HT GC5xx	Yes		It acquires the status of the remote-control switch that divides neutral and earth. **Available only with HT HT GC5xx.**

7.5.2 Virtual digital inputs

From 1.23 review, the board, besides the physical digital inputs, also manages 16 virtual digital input . They are managed by the board exactly as if they were physical inputs (without limitations), but the status of virtual inputs is not acquired by the hardware, instead determined via software, by using AND/OR logics. In fact, every digital input can have an AND/OR logic associated, which determines its status (see par. 7.4).

Example of use 1. Let's suppose that we want to activate an early warning if the mains exceeds tolerance limits, but only if GCB switch is closed. Let us use the virtual digital input #1 (as example).

- Using the BoardPrg3 software we associate an AND/OR logic configured as AND to the #1 virtual digital input, with the following list of conditions:
  - ST.064 (“Status of the GCB”)
  - ST.017 (“Mains out of tolerance or absent”).
- The virtual digital input will therefore be active when the GCB is closed and the mains is out of tolerance.
- Let us set the DIF.0001 function (“Generic warning”) within the P.2151 parameter.
- Let us set the desired delay (for example 0.5 s) within the P.2152 parameter .
- Let us set the alarm message (for example “mains voltage warning”) within the P.2153 parameter .

Example of use 2. Let's suppose that we want to activate a digital output with this logic on digital inputs: OUT01 = (IN01 AND IN02) OR (IN03 AND IN04)

It is not possible to use AND/OR logics because they can make AND or OR separately. But it is possible to use the following three AND/OR logics:

- IN_VIRT_01 = (IN01 AND IN02)
- IN_VIRT_02 = (IN03 AND IN04)
- OUT01 = (IN_VIRT_01 OR IN_VIRT_02)

In this case P.2151 and P.2154 parameters that configure the function of the first two virtual digital inputs should be left as "0-Not used" as they are used as supports.

7.6 Digital outputs configuration

HT GC310 board have eight standard relay digital outputs.

HT GC350 and HT GC500 boards have eighteen standard relay digital outputs.

HT GC500^{Plus} board has eight standard digital outputs and ten transistor relay outputs.

All the boards can also manage a DITEL module, with eight or sixteen relay outputs. Use P.0141 parameter to configure the presence of DITEL module.

For the connection and the characteristics of the digital outputs, see opening paragraphs.

All digital outputs are fully configurable (with the exception of JH-3 fuel solenoid valve control and GCB JG-1 ... 3 switch control).

By default, internal relays/transistors associated with all digital outputs are activated when its related logic function requires their activation.

With BoardPrg3 the logic inversion of the output can be achieved by simply checking the "Inverted polarity" box in the configuration page of the single output. The box does not appear if the output is configured as DOF.0000 - "Not used".

It is however possible to reverse this convention (individually for each output) also by acting directly on the device by using the appropriate parameters:

Parameter	Outputs
P.0580	01...04, JH-1 e JG-4...6
P.0589	05...14
P.3200	DITEL #01

Said parameters have a bit for each output:

- A zero-bit means that the output is normally on standby and starts operating when the related feature requires it.
- A one-bit means that the output is normally operating and goes on standby when the related function requires it.

As default, all the bits are set to 0.

Each output is associated with a parameter that configures its function (P.0581 for output 1).

The only eighteen outputs of the board (not the outputs of DITEL expansion module) have three additional parameters (each), used for the "bit mapping" (see later). See documents [1] [2] for the parameters list.

The following two functions, not directly linked to the operation sequences of the board, are selectable for any digital output:

- DOF.0103 - “Logics AND/OR”. See 7.4.
- DOF.0022 – “Bit mapping” (not available for DITEL module outputs). With this function, a digital output of the board is configured to operate when at least one of the 196 possible preset conditions is true. This function therefore implements an OR logic among the 196 possible conditions in order to activate the output. The 196 conditions are divided into 3 blocks of 64 each. Each block is programmed on the board as a 16-character hexadecimal string (each hexadecimal character describes 4 bits; 4bits x 16 characters -> 64 bits). Therefore, each output has 3 associated 16-character hexadecimal strings (P.0601, P.0602 and P.0603 parameters for output 1). Please refer to the documents [1] and [2] for the detailed description of the 196 conditions. In general, however:
    - The first 128 conditions allow selecting all the anomalies of the board. NB: the output starts operations when the selected anomaly is active, not when the digital input that causes it is active (for example in OFF/RESET the inputs can operate but no anomaly is enabled, then the output will be idle).
    - The last 64 conditions are general statuses of board, engine, generator, mains and so on.

7.6.1 Functions configurable on the digital outputs

Code	Function	HT GC310	HT GC350	HT HT GC5xx	Note
DOF.0000	Not used.	X	X	X	The output is not used
---	Fuel solenoid valve	X	X	X	Function available only on JH-3output, which is not configurable for other functions.
DOF.0001	Reset pulse.	X	X	X	
DOF.0002	Glow plugs preheating.	X	X	X	
DOF.0003	Fuel pump	X	X	X	
DOF.0004	Load thresholds status.	X	X	X	
DOF.0005	Test in progress.	X	X	X	
DOF.0006	Mains in tolerance	X	X	X	
DOF.0007	Generator in tolerance	X	X	X	
DOF.0008	Engine running.	X	X	X	
DOF.0009	Generator faults.	X	X	X	
DOF.0010	Engine faults.	X	X	X	
DOF.0011	Speed anomalies.	X	X	X	
DOF.0012	Fuel faults.	X	X	X	
DOF.0013	Switching anomalies.	X	X	X	
DOF.0014	Gas valve.	X	X	X	
DOF.0016	Command of arrest when energized	X	X	X	
DOF.0017	Warnings cumulative	X	X	X	
DOF.0018	Cumulative of alarms (shutdowns).	X	X	X	

DOF.0019	Manual + Automatic.	X	X	X	
DOF.0020	Automatic	X	X	X	
DOF.0021	Outside siren.	X	X	X	
DOF.0022	Bit mapping.	X	X	X	Available only on the outputs present on GCxxx. Not configurable on the digital outputs of DITEL expansion modules.
DOF.0023	Idle speed command	X	X	X	
DOF.0024	Coolant heating.	X	X	X	
DOF.0025	Engine enabling.	X	X	X	
DOF.0026	Synchronization in progress.			X	
DOF.0028	Current switching synchronization.			X	
DOF.0029	MCB (NC) under voltage coil.			X	
DOF.0030	GCB under voltage coil.			X	
DOF.0031	Closing control for external switching to the generators.			X	
DOF.0032	Opening control for external switching from the mains.			X	
DOF.0033	Remote-control switch control for the earthing of the neutral (NECB).			X	
DOF.0034	Start control.	X	X	X	
DOF.0035	Impulse closing command for MCB (NC)	X	X	X	
DOF.0036	Synchro-check.			X	
DOF.0037	Live bars			X	
DOF.0038	Select battery 1.	X	X	X	
DOF.0039	Select battery 2.	X	X	X	
DOF.0040	Mains present (from protection from mains failure)			X	
DOF.0041	Device failure (Watch-dog)		X	X	The function is only configurable on JRB and JSB outputs (output 5 through output 14).
DOF.0049	PWM 500 Hz			HT GC500Plus	Only HT GC500Plus Configurable only on JS outputs (10, 11 and 12)
DOF.0050	Speed increase control			X	
DOF.0051	Speed decrease control			X	
DOF.0052	Speed reset control			X	

DOF.0053	Voltage increase control			X	
DOF.0054	Voltage decrease control			X	
DOF.0055	Voltage reset control			X	
DOF.0103	AND/OR logics.	X	X	X	
DOF.1034	Fuel pump solenoid.	X	X	X	
DOF.2002	MCB opening coil.			X	
DOF.2003	MCB closing coil.			X	
DOF.2032	GCB opening coil.			X	
DOF.2033	GCB closing coil.			X	
DOF.2034	Impulse closing command for GCB			X	Fixed function of JG-1/2/3 relay output (GCB control), which is not configurable with other functions. On HT HT GC5xx, the function is however configurable on the other outputs as well.
DOF.3153	Lamps test	X	X	X	

7.7 Conversion curves

The conversion curves are a tool which allow you to convert a numerical value into another numerical value. They can be used for two purposes:

- To convert the value acquired from a (physical) analogue input into the real units of measurement of the sensor.
- Convert an internal measure of the controller board into a percentage value, prior to "writing" it on an analogue output.

INFORMATION! : the conversion curves cannot be configured directly from the panel of the controller board, but through a PC equipped with the BoardPrg3 software (see [14]).

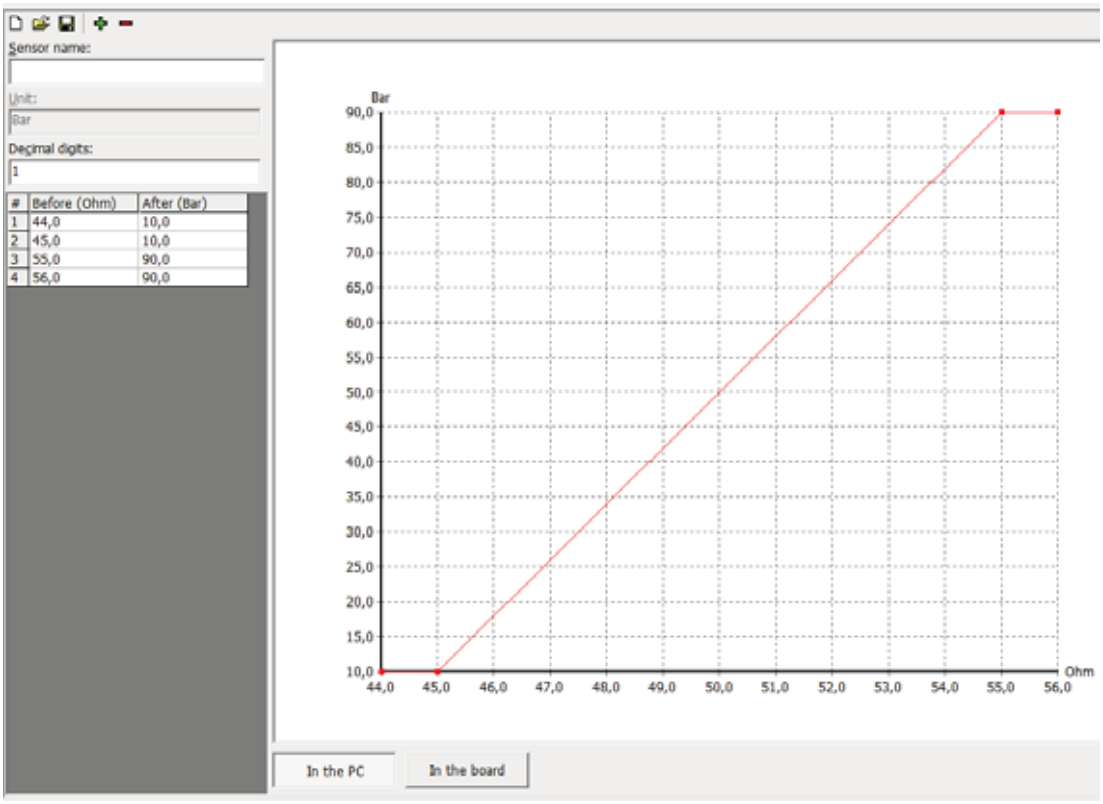

The figure above shows a conversion curve associated to an analogue output. The analogue output has been configured with the function AOF.3101 ("generator frequency"). With this configuration, the output will be 10% for a generator frequency lower than or equal to 45 Hz, 90% for a frequency higher than or equal to 55 Hz; for frequency values included between 45 Hz and 55 Hz, the output will take a value between 10% and 90%.

You can add up to 32 points in the graph, thus creating also non linear curves. See in the example that the curve configured has two horizontal segments at the beginning and at the end, obtained by entering two equal values in the “After” column, corresponding to two different values in the “before” column. This is not obligatory, but it allows you to set a saturation limit on one end or on both ends of the curve. In fact, the controller board extends to infinity the first and last segments of the curve. Being horizontal, whatever value the measure “to convert” assumes, you will obtain the same value of the “converted” measure. In the previous example, for any frequency measure lower than 45 Hz, the analogue output will be set at 10%. If from the example above you removed the first point (44 Hz 10%), the horizontal segment would not be at the beginning of the curve: in this case, if the frequency should drop below 45 Hz, the analogue output would drop below the 10%.

The BoardPrg3 software allows you (by means of the first buttons on top left) to save the curve on file to be able to use it again in other applications. So you can create an archive of the conversions associated to the sensors used.

7.8 Analogue inputs configuration

HT GC3XX boards have three standard analogue (resistive) inputs .

HT HT GC5xx boards add two 0-10VDC inputs to the three resistive ones.

All boards can also manage two modules for the acquisition of temperatures (DIGRIN/DITHERM, for a maximum of six temperatures). Use P.0142 parameter to configure the presence of DIGRIN/DITHERM modules.

Finally, all boards can manage a DIVIT module (for up to four analogue inputs). Use P.0143 parameter to configure the presence of DIVIT modules.

To connect analogue inputs, see the opening paragraphs.

The boards also manage eight virtual analogue inputs. For the virtual inputs see paragraph 7.8.2.

All inputs are configurable, but not all functions can be associated with all inputs. (For a list of the functions that can be assigned to resistive inputs, see par. 5.1.11; for the list of functions associated with each live analogue input, see the documents [1] and [2]). It is possible to apply a conversion curve to all analogue inputs.

Resistive analogue inputs. These inputs (JM connector) have a dedicated (non-generic) management. They can be used, in fact, to acquire only oil pressure (JM-3), coolant temperature (JM-4) and fuel level (JM-2). For the configuration, use the following parameters:

- P.0112 (JM-3).
- P.0113 (JM-4).
- P.0114 (JM-2).

With the above parameters, it is possible to disable the input ("0"), or select from a range of preset sensors (VDO, WAKE, etc.). By using "20" or "21" functions, it is possible to be adapted to any sensor, through the use of a conversion curve.

Use of analogue inputs as digital ones. The resistive analogue inputs of the board (JM connector) can be individually used as digital inputs. To do this, configure the input (P.0112 and further ones) with AIF.0099 function ("used as digital input"). For the wiring of inputs (when used as digital) see the opening paragraphs of the document.

Generic analogue inputs. They are the two 0-10VDC inputs of HT HT GC5xx boards, all inputs acquired by the expansion modules and virtual analogue inputs. Each of these analogue (both physical and virtual) inputs are associated with eight parameters:

- One parameter which configures its function (P.4001 for input 1).
- One parameter allows to define a text message to display. (P.4002 for input 1).
- Two thresholds consisting of three parameters each:
    - One parameter which configures the threshold value (P.4003 and P.4206 for input 1).
    - One parameter which configures the delay for managing the “out f threshold”(P.4004 and P.4007 for input 1).
    - One parameter which configures the checking options and the actions in case of “out of threshold” (P.4005 and P.4008 for input 1).

See documents [1] and [2] for the parameters list.

The parameter that configures the message for an analogue input (P.4002 for input 1) is used by the board whenever thresholds are used to trigger early warnings and/or alarms (see below); it is also used for AIF.2001, AIF.2003, AIF.2005 functions.:

The two thresholds are completely independent on each other. The third parameter of each threshold is a “bit” parameter that allows you to associate to each threshold the following options:

- Bit 1: allows configuring the "out of threshold" condition:
    - 0: the " out of threshold " condition occurs when the measurement is higher than the threshold.
    - 1: the " out of threshold " condition occurs when the measurement is lower than the threshold.

- Bit 2: allows managing the internal status linked to the thresholds on a measurement (see below).
- Bit 5...8: allow indicating the typology of anomaly:
    - Bit 5: early warning.
    - Bit 6: unload (only HT HT GC5xx).
    - Bit 7: Deactivation.
    - Bit 8: lock.

    Note: if none of these bits is selected, the threshold does not activate faults, but it can still be used to manage the internal status (see below). Only one of these four bits should be enabled: if two or more are active, the board uses the one that requires the most severe anomaly.
- Bit 9...13: allow determining the conditions under which the "out of threshold " condition can be assessed. They are not linked to anomalies, then they act even if the thresholds are used to drive the internal status (see below) and not to activate anomalies.
    - Bit 9: the " out of threshold" condition is assessed only if the engine is running.
    - Bit 10: the "out of threshold" condition is assessed only if the engine has been running since at least the time set with P.0216 parameter ("engine protection masking time").
    - Bit 11: the "out of threshold" condition is assessed only if GCB switch is closed.
    - Bit 12: the "out of threshold" condition is assessed only if the fuel solenoid valve is open (FUEL, see 10.5.5.5).
    - Bit 13: the "out of threshold" condition is assessed only if the GAS solenoid valve is open (GAS, see 10.5.5.7).

    It is possible to select any combination of these bits: the " out of threshold" condition is assessed only if all the selected conditions are met.
- Bit 14. This bit is only linked to anomalies. If selected, it subjects the activation of anomalies to the status of a digital input configured with DIF.0074 function ("disable protections on analogue measurements"): if this input exists and is active, the board does not trigger this anomaly.
- Bit 16. This bit is only linked to anomalies. If this bit is selected, the board "transforms" the anomaly into an early warning, if the OVERRIDE of engine protections or the complete OVERRIDE are active (see 11.5).

You can select any combination of these bit.

Internal status linked to thresholds on analogue measurements. The board is capable of using both thresholds on an analogue measure to activate/deactivate an internal status: this status is then accessible from the AND/OR logics, and it is therefore possible to use it to control the digital outputs of the board.

Intrinsically, the board uses the "out of threshold" condition of one of the two thresholds to activate the internal status, the "out of threshold" condition of the other threshold to deactivate it (therefore managing a band of hysteresis).

The configuration is performed by using the bit 2 of the configuration parameter of both thresholds (P.4005 and P.4008 for input 1). Set to "1" the bit 2 in the configuration parameter related to the threshold that should activate the internal status; set it to "0" in the configuration parameter of the other threshold.

Let's take an example: let's suppose that the analogue input 1 acquires a temperature and that the board should manage a heating system to keep the temperature at 50°C. Let's suppose then that you want to activate the external heating system when the temperature falls below 45°C and to turn it off when the temperature rises above 52°C. The parameters can be configured in the following way (example referred to analogue input 1):

- P.4003: 45.0 °C
- P.4004: 5.0 s
- P.4005: 0003 (bit 1 on, bit 2 on)
- P.4006: 52.0 °C
- P.4007: 3.0 s
- P.4008: 0000 (bit 1 off, bit 2 off)

The first threshold is used to activate the internal status (but the opposite could be done). With the first three parameters, the board is configured to activate the internal status (bit 2 of P.4005 on) when the temperature measurement is lower (bit 1 of P.4005 on) than the 45°C threshold for 5 consecutive seconds. The board is configured to deactivate the internal status (bit 2 of P.4008 off) if the temperature measurement is higher (bit 1 of P.4005 off) than the 52 C° threshold for 3 consecutive seconds.

7.8.1 List of generic sensor analogue measurement

All generic analogue current (non-resistive) inputs of HT HT GC5xx or voltage/current expansion modules are configurable. Use the following functions (P.4001 parameter for input 1 and corresponding ones for the other inputs) to acquire:

- AIF.1001 (“oil pressure – generic”). Use a conversion curve to configure the sensor.
- AIF.1100 (“oil temperature – generic”). Use a conversion curve to configure the sensor.
- AIF.1100 (“coolant temperature – generic”). Use a conversion curve to configure the sensor.
- AIF.1201 (“oil level – generic”). Use a conversion curve to configure the sensor.
- AIF.1211 (“coolant level – generic”). Use a conversion curve to configure the sensor.
- AIF.1221 (“fuel level – generic”). Use a conversion curve to configure the sensor.
- AIF.1601 - "air temperature in the intake pipe" Use a conversion curve to configure the sensor.
- AIF.1603 (“exhaust gas temperature – left bank”). Use a conversion curve to configure the sensor.
- AIF.1605 (“exhaust gas temperature – right bank”). Use a conversion curve to configure the sensor.
- AIF.1641 (“pressure of air coming out from the turbocharger”). Use a conversion curve to configure the sensor.
- AIF.2001 (“Generic sensor page 1”) Use a conversion curve to configure the sensor.
- AIF.2003 (“Generic sensor page 2”) Use a conversion curve to configure the sensor.
- AIF.2005 (“Generic sensor page 3”) Use a conversion curve to configure the sensor.

The previous functions configure the input as "Generic sensor". In this case, the acquired measurement will be displayed on the pages E.10 through E.12, preceded by the configured

message. **NOTE: You can also use the AIF.2051 function instead of the previous three. in this case, the measure acquired will not be displayed on pages E.10...E.12; however, you can still use it with the thresholds to manage digital outputs and activate warnings/locks.**

7.8.2 Virtual digital inputs

In addition to the physical analogue inputs, the controller also operates 8 virtual analogue inputs. They are managed by the board exactly as if they were physical inputs (without limitations), but the value of the virtual inputs is not acquired by the hardware, instead "copied" from one of the measures available on the board. It is therefore possible to associate some thresholds to internal measures and use them to activate the digital outputs or to generate anomalies.

To select the measure to be "copied" into the analogue input, use the parameter that configures the function (P.4001 for input 1):

Function	Note	Description
AVF.4001		Generator frequency
AVF.4006		L1-L2 Generator voltage
AVF.4007		L2-L3 Generator voltage
AVF.4008		L3-L1 Generator voltage
AVF.4009		L-L Generator medium voltage
AVF.4012		Mains/bars frequency
AVF.4017		L1-L2 mains/bars voltage
AVF.4018		L2-L3 mains/bars voltage
AVF.4019		L3-L1 mains/bars voltage
AVF.4020		L-L mains/bars medium voltage
AVF.4023		Current phase L1
AVF.4024		Current phase L2
AVF.4025		Current phase L3
AVF.4026		Auxiliary current (including N)
AVF.4031		Active power L1
AVF.4032		Active power L2
AVF.4033		Active power L3
AVF.4034		Total active power
AVF.4041		Total apparent power
AVF.4047		Total reactive power
AVF.4058		Total power factor
AVF.4059		Total Cos(ϕ)
AVF.4063		Partial active energy of the generator
AVF.4065		Partial reactive energy of the generator
AVF.4069		Partial mains/bars active power
AVF.4071		Partial mains/bars reactive power
AVF.4074	HT HT GC5xx	The active power of the main.
AVF.4075	HT HT GC5xx	The active power of the loads.
AVF.4076	HT HT GC5xx	Active power on generator bars
AVF.4080	HT HT GC5xx	Required (final) power
AVF.4082	HT HT GC5xx	Rpm regulator control

AVF.4085	HT HT GC5xx	Required reactive power (instantaneous)
AVF.4086	HT HT GC5xx	Control voltage regulator
AVF.4088		Speed
AVF.4091		Oil level
AVF.4092		Coolant level
AVF.4093		Fuel level
AVF.4096		Instantaneous consumption
AVF.4097		Average consumption
AVF.4105		Battery voltage measured by the controller
AVF.4108		Engine start number
AVF.4111		Engine operating hours (ECU)
AVF.4112		Engine operating hours
AVF.4114		Engine partial operating hours with GCB closed (partially)
AVF.4116		Engine partial operating hours left before maintenance (partially)
AVF.4121		Oil pressure
AVF.4122		Coolant pressure
AVF.4123		Fuel Delivery Pressure
AVF.4126		Air pressure in the intake pipe
AVF.4134		Room temperature
AVF.4136		Oil temperature
AVF.4137		Coolant temperature
AVF.4138		Fuel Temperature
AVF.4139		Air temperature in the intake pipe
AVF.4140		Temperature of the turbocharger
AVF.4141		Exhaust gas temperature (left bank)
AVF.4142		Exhaust gas temperature (right bank)
AVF.4143		Intercooler temperature

Example 1: In the following example, we want to activate an output when the rotation speed of the engine is higher than 1520 rpm.

ID	Descrizione	U.M.	Nel	Nel PC
P.4051	Funzione per l'ingresso analogico virtuale 1			4088-Velocità
P.4052	Messaggio per l'ingresso analogico virtuale 1			Velocita motore >1520
P.4053	Soglia #1 per l'ingresso analogico virtuale 1			1520,00
P.4054	Ritardo #1 per l'ingresso analogico virtuale 1	s		0,0
P.4055	Configurazione #1 per l'ingresso analogico virtuale 1			0002
P.4056	Soglia #2 per l'ingresso analogico virtuale 1			1515,00
P.4057	Ritardo #2 per l'ingresso analogico virtuale 1	s		0,0
P.4058	Configurazione #2 per l'ingresso analogico virtuale 1			0001

With this configuration, the "internal status" associated with the virtual analogue input will be activated when the speed gets higher than 1520 rpm and is deactivated when the speed comes back under 1515 rpm (hysteresis). This "internal status" can be copied into a digital output by using AND/OR logics.

Two virtual analogue inputs working on the same measure inside the board can be used. It is therefore possible, for example, to use a virtual analogue input that activates its " internal status" when the speed is higher than 1500 rpm and a second one that instead activates it when it is lower than 1480. By using AND/OR logics, it is therefore possible to activate an output when the speed is higher than 1520 or lower than 1480.

Example 2: Let's suppose you want to monitor the reactive power of the generator and trigger an alarm when it becomes lower than -100 kvar (capacitive).

The virtual input 1 is used:

- P.4051 (function) = AVF.4047 – “Total reactive Power”
- P.4052 (text) = “too capacitive load”
- P.4053 (1st threshold) = “-100.00”
- P.4054 (delay on the 1st threshold) = “5.0”
- P.4055 (configuration of the 1st threshold) = “0011”.
- P.4056 (2nd threshold) = -
- P.4057 (delay on the 1st threshold) = -
- P.4058 (configuration of the 1st threshold) = -

When the total reactive power is lower than -100 kvar consecutively for 5 seconds, the board will activate the early warning "W313-Low value: too capacitive load”.

7.9 Configuration of the analogue outputs

HT HT GC5xx boards have two standard analogue outputs. All HT GCxxx boards can anyway manage a DANOUT expansion module (maximum four outputs). Use P.0144 parameter to configure the DANOUT module.

Each output is associated with a parameter that configures its function (P.6001 for output 1, P.6011 for the first output of DANOUT module). See documents [1] and [2] for the parameters list.

To all analogue outputs it is possible to apply a conversion curve.

7.10 Alternative parameters configuration

You can use certain properly configured digital inputs to change the configuration of the system without changing the programming parameters. In fact, the controller manages internally four groups of alternative parameters that can be “copied” in the operating parameters on request (through a dedicated digital input).

Alternative configurations can be programmed only using the BoardPrg3. You cannot program or modify the configurations from the controller.

The parameters present in each alternative group are the following:

- P.0101: Generator number of phases.
- P.0102: Generator nominal voltage
- P.0103: Primary of generator voltmeter transformers.
- P.0104: Secondary generator voltmeter transformers.
- P.0105: Generator nominal frequency.
- P.0106: Generator nominal power (kVA).
- P.0107: Primary of the generator/user current transformer.
- P.0108: Current transformer primary for auxiliary power.
- P.0116: Mains/bars nominal voltage

- P.0117: Primary of mains/bars voltmeter transformers.
- P.0118: Secondary of mains/bars voltmeter transformers.
- P.0119: Mains/bars number of phases.
- P.0125: Engine nominal power (kW).
- P.0701: Nominal engine speed.

It is possible to change the configuration by means the following functions:

- DIF.0064 – “Select configuration 1”. When the input becomes "active", parameters of alternative configuration set 1 are copied in the working configuration.
- DIF.0065 – “Select configuration 2”. When the input becomes "active", parameters of alternative configuration set 2 are copied in the working configuration.
- DIF.0066 – “Select configuration 3”. When the input becomes "active", parameters of alternative configuration set 3 are copied in the working configuration.
- DIF.0067 – “Select configuration 4”. When the input becomes "active", parameters of alternative configuration set 4 are copied in the working configuration.

WARNING! : when an alternative configuration is copied in the operating parameters, the previous values of the operating parameters are lost. The only way to restore them is to have them stored in another alternative configuration and recall it.

This function is usually used with multiple-voltage and/or multiple-frequency panels: wiring the cams of a selector to the panel on the inputs of the controller, you can manually switch voltages and frequency without having to use the parameters of the controller.

NOTE: parameter change occurs only with engine shut off and with the controller in OFF/RESET mode.

8. History logs

During operations, the board makes periodic records of a single event, partially configurable with programming parameters. The controller manages five types of archive:

Events: at the time when an event (previously configured) occurs, the board adds a record in this archive. Full capacity is 99 records. If the archive is full and a new event occurs, the less recent is overwritten (so always the last 99 events are stored).

For each event, besides a numeric code that identifies it, the date/time on/at which it occurred, the operation mode of the board, the statuses of the engine, of the generator, of the mains and of the switches at that time are recorded. It also records the status of the digital inputs of the board and active anomalies (the four most recent ones).

If the event is an anomaly, measures described for the analog archives are also stored . These further analogue measurements are only available for the 15 most recent anomalies.

The configuration of the events can be recorded is possible by means of P.0441 parameter:

Value P.0441	Recording cause
0	Anomalies, new starts, clock updates, non-valid clock, OVERRIDE activation and deactivation.
1	As "0" and moreover the variations in the status of the generator.
2	As "1" and moreover the variations in the status of commutation.
3	As "2" and moreover the variations in the status of the engine.
4	As "3" and moreover the variations in the status of the mains.
99	All events

Below you will find a table showing the codes of all possible events.

Code	Note	Description
EVT.1001	Although blocked	Controller in OFF/RESET mode
EVT.1002	Although blocked	Controller in MAN mode
EVT.1003	Although blocked	Controller in AUTO mode
EVT.1004	Although blocked	Controller in TEST mode
EVT.1005	Although blocked	Controller in REMOTE START mode
EVT.1010		Mains failure
EVT.1011		Mains out of tolerance
EVT.1012		Mains in tolerance
EVT.1013		"Inhibition to automatic intervention" is active (from digital input).
EVT.1014		"Inhibition to automatic intervention" is not active (from digital input).
EVT.1020		Generator failure
EVT.1021		Generator out of tolerance
EVT.1022		Generator in tolerance
EVT.1030		GCB Close command
EVT.1031		GCB Open command
EVT.1032		GCB closed.
EVT.1033		GCB open.
EVT.1035		MCB Close command
EVT.1036		MCB Open command
EVT.1037		MCB closed
EVT.1038		MCB open.

EVT.1040		Engine stopped
EVT.1041		Starting cycle
EVT.1042		Engine running.
EVT.1043		Cooling cycle
EVT.1044		Stopping cycle
EVT.1045		Idle speed cycle
EVT.1050		Manual startup command
EVT.1051		Manual stop command
EVT.1052		Auto start command
EVT.1053		Auto stop command
EVT.1054		Start control (REMOTE START or TEST) from digital input.
EVT.1056		Start control (REMOTE START or TEST) from serial port.
EVT.1057		Stop control (MAN) from serial port.
EVT.1058		Start control (REMOTE START or TEST) from clock/calendar.
EVT.1060		Start control (REMOTE START or TEST) from SMS.
EVT.1061		Stop control (MAN) from SMS.
EVT.1062		Starting command for failure to close MCB.
EVT.1063	HT HT GC5xx	Startup command from MC100
EVT.1070		Fuel pump on
EVT.1071		Fuel pump off
EVT.1074		Reset
EVT.1075		Clock/Calendar not valid (but used by some functions)
EVT.1076	Although blocked	Date/time update
EVT.1077		New controller power-on
EVT.1078	HT HT GC5xx	Default of parameters reloaded.
EVT.1080		Activation of inhibition to power load.
EVT.1081		Deactivation of inhibition to power load.
EVT.1082		OVERRIDE activation of engine protections.
EVT.1083		OVERRIDE deactivation of engine protections.
EVT.1091	HT HT GC5xx	Triggered protection for the parallel with the mains “27 U<”.
EVT.1092	HT HT GC5xx	Triggered protection for the parallel with the mains “59 U<”.
EVT.1093	HT HT GC5xx	Triggered protection for the parallel with the mains “81 U<”.
EVT.1094	HT HT GC5xx	Triggered protection for the parallel with the mains “81 U<”.
EVT.1095	HT HT GC5xx	Triggered protection for the parallel with the mains “$\Delta f/\Delta t$”.
EVT.1096	HT HT GC5xx	Triggered protection for the parallel with the mains “Vector Jump”.
EVT.1097	HT HT GC5xx	Triggered protections for the parallel with the mains (from MC100 board).
EVT.1098	HT HT GC5xx	Triggered protections for the parallel with the mains (from contact).
EVT.1099	HT HT GC5xx	Restored protections for the parallel with the mains.

The wording "even if blocked" in the "notes" column indicates which events are still recorded, even if the records are blocked (see 8.8).

All the anomalies are recorded in the records of events. Every anomalies are recorded with their own numerical code, added to:

- 2000: if the anomaly is an early warning.

- 3000: if the anomaly is a discharge (only HT HT GC5xx).
- 4000: if the anomaly is a deactivation.
- 5000: if the anomaly is a shutdown.

For example, anomaly 273 will be recorded as "2273" when it is activated as an early warning, as "5273" if it is activated as a shutdown. By viewing the events from the board panel, the event code "2273" is automatically displayed as "W273", the code 5273 is displayed as "A273".

Fast analogues: with a pace configurable via P.0442 parameter (interval in seconds) the board records the following analogue dimensions.

- Date and time
- Phase-to-phase voltages and mains (or bar for HT HT GC5xx) frequency.
- Generator frequency and phase-to-phase voltages.
- Three currents of the generator (or of the users).
- Active, reactive and apparent power, power factor and kind of (total) load of the generator (or of users)
- Starting battery voltage, engine rotation speed, coolant temperature, oil pressure and engine fuel level.

The measures not acquired (because the controller was not set to acquire them) are replaced by dashes. These records have a 30-recording capacity that, with the default recording pace (60 seconds), covers a period of half an hour. Every following record overwrites the older one.

Slow analogues: with a pace configurable via P.0443 parameter (minutes), the board records the same dimensions described in the previous paragraph. These records have a 48-recording capacity that, with the default recording pace (30 minutes), covers a period of one day. Every following record overwrites the older one.

Peaks: the controller performs a series of recordings of maximum and minimum peaks for some significant measures.

- Total active power: the maximum peak is recorded, having the date/time and the measure of the engine coolant temperature (if available) associated.
- Currents: the maximum peaks of individual phases are recorded, having the date/time and power factor of that particular phase associated.
- Coolant temperature: the maximum peak is being recorded, with date/time associated.
- Controller temperature: the maximum an minimum peaks are recorded, having the date/time associated

Engine diagnostics (DTC): the board records of the diagnostic codes read from the engine control unit (ECU) via CAN-BUS. This archive have can store up to 16 records. Every following record overwrites the older one.

8.1 Access to the display of records

The history logs can be accessed in any controller working status. To access archive visualization, press the ▲ and ▼ buttons till the HISTORY LOGS (H.01) page is displayed. If you are in a mode that restricts the use of vertical scroll buttons, it could be necessary to press EXIT key one or more times (this situation may arise when programming of parameters or during special operations such as, for example, the setting of the control mode of the fuel pump).

Press ENTER to activate the mode (you will shift to "H.03" page): the menu that lists all available records is displayed.

8.2 Exit from archives visualization

There are two ways to exit from archive visualization:

- Press the EXIT button 'n' times to scroll back to page H.01
- Change the operating mode of the controller.

In both cases, page H.01 will display; you may move to other display modes using the ▲ and ▼ buttons.

8.3 Log selection

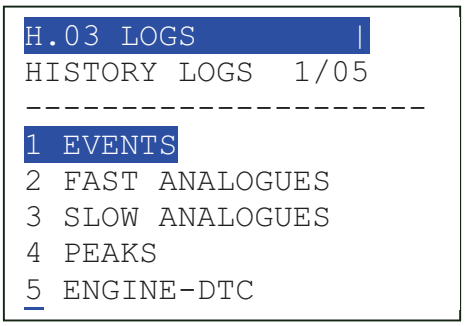

The second row always shows the index of the selected item and the number of items in the menu. The next lines of the display are used to display the archives that could be selected. The selected item is highlighted in reverse. Use the ▲ e ▼ buttons to cyclically scroll through the menu to the lower and upper index items (i.e. pressing the ▲ allows to directly cycle from the first item to the last one).

By pressing ENTER key, the selected record (highlighted one) will be entered; by pressing EXIT key "H.01" page will be displayed again.

8.4 Events pages

The second row shows what event is currently displayed with reference to the total number of events. NOTE: the most recent event is associated to the highest number. Use the ▲ and ▼ buttons to scroll cyclically trough all recordings.

To display every event, the controller uses at least three pages of the display: if the event displayed is one of the 15 most recent anomalies, it uses seven pages. It is possible to view the various pages associated to an event with ◄ ► keys.

The fourth line of each event page displays the date/time of the record; on the right it also displays two arrows indicating the availability of further pages to the right or to the left of the current page for the current event.

The lines from the fifth to the eighth show different information, depending on the selected page.

- On the first page the numerical code and a description of the event (which depends on the selected language) are shown.
- On the second page the operation mode of the board, as well as the statutes of the engine, of the generator and of the mains (recorded with the event) are shown.
- The third page shows the status of MCB and GCB switches, at the time of recording.
- For the 4th to 7th pages see the description of the archives of analogues.

8.5 Frames for fast/slow analogues

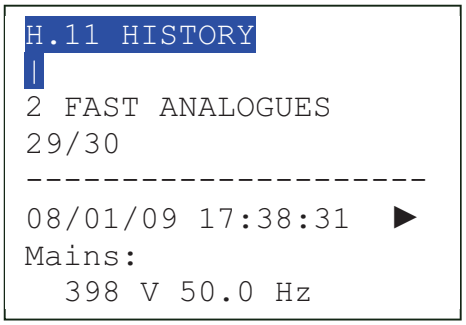

The second line shows which recording is currently displayed with reference to the total number of records (in the example 29th recording out of 30 is displayed). NOTE: the more recent record is associated to the highest number. Use the ▲ and ▼ buttons to scroll cyclically trough all recordings.

To display all records, the controller uses four pages of the display. It is possible to view the various pages associated to a recording with ◄ ► keys.

The fourth line of each page displays the date/time of the record; on the right it also displays two arrows indicating the availability of further pages to the right or to the left of the current page for the current recording.

The lines from the fifth to the eighth show different information, depending on the selected page.

- On the first page voltages and frequency of the mains (or of parallel bars for HT HT GC5xx) are shown.
- On the second page phase-to-phase voltages and frequency of the generator are shown.
- On the third page currents, total powers (kW, kvar, kVA), power factor and type of load are shown.
- On the fourth page coolant temperature, oil pressure, fuel level, rotation speed and battery voltage are shown.

If certain data are not available at the time of recording, dashes will be displayed.

8.6 Pages for peaks

```
H.19 HISTORY
|
4 MAX. PEAKS    1/07
--------------------
Maximum power

17/12/08 10:35:54
345.4 kW
```

The second line shows the record currently displayed, out of the total number of records (the total number of records is 7). Use the ▲ and ▼ buttons to scroll cyclically trough all recordings.

For the visualization of each recording, the board uses a single display page, then ◄► keys are not used.

The fourth line shows a description of the peak recording currently displayed:

- Maximum power
- Maximum current. (L1)
- Maximum current. (L2)
- Maximum current. (L3)
- Maximum coolant temperature
- Minimum controller's temperature.
- Maximum controller's temperature.

The sixth line shows the recording date and time. The seventh line displays the recorded measure (power, current etc.) A second measure recorded together with the main measure can be displayed on the eighth line:

- The coolant temperature is recorded together with the power.
- The power factors on individual phases are recorded together with the currents.

If certain data are not available at the time of recording, dashes will be displayed.

8.7 Engine diagnostics pages (DTC)

```
H.23 HISTORY          |
5 ENGINE-DTC    16/16
--------------------
09/01/2009 14:27:12

DTC:6.6 SPN:100 1 1
Engine oil pressure
Data low (shutdown)
```

The second line shows the record currently displayed, out of the total number of records (the maximum number of records is 16). NOTE: the more recent record is associated to the highest number. Use the ▲ and ▼ buttons to scroll cyclically trough all recordings.

For the visualization of each recording, the board uses a single display page, then ◄► keys are not used.

The fourth line shows the recording date and time.

The sixth line shows the diagnostic code. It contains:

- DTC is the diagnostic code specific of the engine (the one to be found in the user manual of the engine, in the example "6.6"). Each engine has its own specific codes. If this code is not available, it is replaced with dashes.
- SPN (Suspect Parameter Number): is a numeric code showing the engine part/component that generated the diagnostic code (in the example, “100” identifies oil pressure measure). This code is available only for the engines that comply with J1939 standard.
- FMI (Fault Mode Identifier): is a numeric code between 0 and 31 that identifies the kind of problem (in the example, “1” indicates an excessively low value of the measure, thus requiring engine stop). This code is available only for the engines that comply with J1939 standard.
- OC (Occurrence Count): indicates how many times this diagnostic code has been activated.

The seventh and eighth line show a text description of the problem, if available.

8.8 Locked recordings

The board does not archive recordings of analogues and recordings of events if it is in OFF/RESET mode and when there are any active shutdowns, disconnections or discharges. Exceptions are some event codes (highlighted by "Even if blocked" in the table in par. 8.4) and all the anomalies. When the records are locked, a padlock icon is displayed in all the windows of the records. To unlock the recordings, it is necessary cancel all anomalies and set the board in MAN or AUTO.

8.9 Deleting of an archive

It is possible to fully delete (empty) an archive with the following procedure:

- Display a recording of the concerned archive (see above).
- Press and hold ENTER + EXIT keys for 5 seconds: at the end the board will display a confirmation message and delete the archive.

9. Special procedures

In addition to the normal operating sequence, HT GCxxx provides for special procedures that should be activated in a particular way. Some of these procedures are reserved to S.I.C.E.S. s.r.l. and therefore they are not described in this document. Others, however, may also be used by the installer or by the end user.

The use of special procedures is no longer necessary because it is possible to perform the same functions without them.

When HT GCxxx performs one of these special procedures, the normal sequence of operations is not performed and the generator is unavailable. It is therefore necessary to perform these special procedures during installation or commissioning of the system. If it is necessary to execute them later, make sure that the users can be supplied from another source during this procedure.

As follows, is the list of special procedures used by the operator:

- **"FUEL LEV": level sensor calibration.**
- **"LANGUAGE": language selection.**

The operations required to activate the special procedures are common to all of them and are described below. NB: All special procedures are protected by a password, provided uncoded in this document. It is not possible to modify these passwords: therefore do not provide them to operators not interested in the special procedures.

Before activating one of the special procedures, make sure that the generator cannot be started.

9.1 Activation of a special procedure

During this phase, all the relay outputs of the board are disabled. The users are switched to the mains.

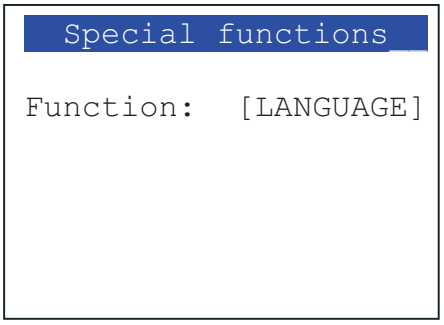

It is necessary to follow the following steps:

1) Remove the power from the board (extract JB connector or open any fuses inside the panel on the power supply wires of the board).

2) Wait at least 5 seconds.

3) Supply the board again, while simultaneously holding START and STOP keys pressed. During this phase the multifunctional display shows question marks. It is necessary keep the two keys pressed until the display appears as in the previous example. NB: if the keys are released early, the board will start performing its normal operating sequences and, to activate the special procedures, it will be necessary to repeat the procedure from step one.

4) On the third line the name of a special procedure will appear between square brackets. Release the START and STOP buttons, and then press ENTER: the square brackets will begin to flash.

5) Select the desired procedure by using ▲ and ▼ keys (until the name of the desired procedure appears in the square brackets). NB: This operation should always be done, even if the required special procedure is changing language. Confirm with ENTER key. Square brackets stop flashing.

6) Now it is necessary to set a password on the fifth line. This password is different for each special procedure (see paragraph related to each of them). To start the setting it is necessary to press ENTER key: the square brackets will begin to flash.

7) Use ▲ key to increase the value displayed in the square brackets, and ▼ key to decrease it (NB: by pressing SHIFT key simultaneously with increase and decrease keys, a faster variation of the value will be achieved).

8) When the desired value is screened in the square brackets, confirm with ENTER key. If the set password is correct, then the special selected procedure (described below) is performed; otherwise the board will display an error message and automatically return to step one.

NB: at any time it is possible to abort this procedure by removing power from the board. In any case, at the end of the special procedure, it is necessary to remove and re-supply power to the board to perform the normal sequence of operations again.

9.2 "FUEL LEV.": level sensor calibration.

This procedure is obsolete and is maintained and documented for compatibility with the boards having earlier versions of the firmware. It is advisable to use a conversion curve for the level sensor, see par. 7.7.

It is possible to connect an analogue level sensor to HT GCxxx to measure the quantity of fuel in the tank. This measure can be used to operate a pump for the automatic loading of the tank on the generator from the storage tank. It can also be used to trigger anomalies in case of its over-filling or emptying. The board manages resistive-type sensors, i.e. that vary the resistance to their ends according to the measured level. A measurement range between 0 and 400 Ohms, which allows operations with the most common types of sensor, is provided for. Each sensor has its own well-defined resistive field, and different from the others. Furthermore, even for the same sensor, each tank has a particular shape and it is likely that the sensor is not able (due to mechanical reasons) to provide the entire range of its resistance between full and empty tank conditions. This procedure has been implemented for these reasons: it allows the operator, during installation or commissioning, to define which resistance value corresponds to empty and full tank.

To perform this calibration, first it is necessary to follow the steps described in 9.1, by using the password "**135**" after selecting the "FUEL LEV" procedure. The board records the calibration values in a non-volatile memory. As a rule, therefore, this procedure is performed only once during the configuration of the system.

At the end of the procedure described in 9.1, the display appears as in the previous example.

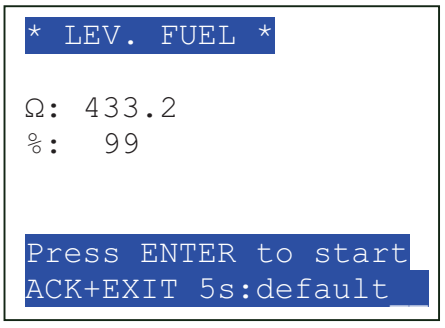

As you can see, the resistive value of the sensor and the corresponding percentage value are always shown (calculated by using present calibration values, not yet modified by the procedure itself).

To calibrate the sensor it is necessary to follow the following steps:

1) Use the ENTER button.

2) The text on the last two lines reads as follows:

```
Move the sens. to pos
 'Empty', press ENTER
```

It is therefore necessary to empty the tank or move the sensor float until it is positioned at the level of an empty tank. Wait for a few seconds until the measurement in ohms is stable, then press ENTER key.

3) The page now looks like this:

```
* LEV. FUEL *

Ω: 433.2
%:  99
                    [0]

Enter the level from.
 Associate Ω to them
```

It is now necessary to set the percentage value that should be associated with the current position of the float. Typically an empty tank is indicated with 0%, but it is possible to associate any value (for example, if you cannot manually move the float completely to the empty position, you can estimate at what level you brought it to and type in the value). To set the value, press ENTER (square brackets are flashing), use ▲ and ▼ keys to change the value and confirm with ENTER. NB: even if the value "0" is the desired one, it is anyway necessary to set it (by pressing ENTER key twice).

4) The text on the last two lines reads as follows:

```
Move the sens. to pos
 'Full', press ENTER
```

It is necessary to fill the tank up to the maximum or manually move the sensor float until it is positioned at the level of a full tank. Wait for a few seconds until the measurement in ohms is stable, then press ENTER key.

5) The page looks as described in step three. It is now necessary to set the percentage value that should be associated with the current position of the float. Typically a full tank is indicated with 100%, but it is possible to associate any value (for example, if you cannot manually move the float completely in the full position, you can estimate at what level you brought it to and type in the value). To set the value, press ENTER (square brackets are flashing), use ▲ and ▼ keys to change the value and confirm with ENTER at the end. NB: even if the value "100" is the desired one, it is anyway necessary to set it (by pressing ENTER key twice).

After the setting the calibration is completed. The procedure returns to step one, so it could be run it again, if necessary. Now the shown percentage value is calculated with the just set calibration values. It is therefore possible to move the float and verify the correct visualization of the level.

When the procedure is at step one, press ENTER and EXIT keys simultaneously for five seconds; the default setting will be reloaded. This calibration is suitable for "WAKE" type sensors and it matches the empty tank to 360 ohm and the full tank to 10 ohm.

9.3 "LANGUAGE": language selection

Starting with version 1.13 of the software, it is possible to change the language by selecting it directly from the page without entering S.06 page and then without entering the special procedure.

HT GCxxx allows you to select the language to be used for all the text messages shown on the multifunctional display. Currently the following languages are supported: Italian, English (default is English). To select the desired language, first it is necessary to follow the steps described in 9.1, by using the password "**1**". The board records the selected language in a non-volatile memory. Normally, therefore, this procedure will have to be done only once.

At the end of the procedure described in 9.1, the display shows the following screen:

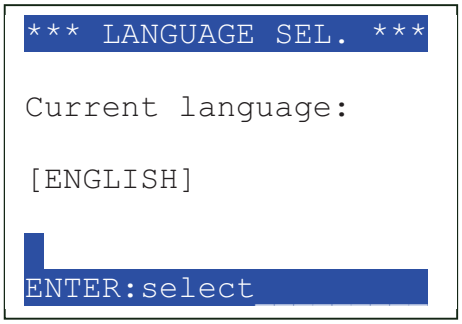

To change the language, the procedure is:

1) Use the ENTER button. The square brackets begin to flash.

2) Select the desired language (in square brackets) by using ▲ and ▼keys.

3) Confirm with ENTER key: the brackets stop flashing.

It is now possible to remove and replace the power supply to the board and work with the new language.

10. Working sequence

10.1 Controller modes

The active working mode is indicated by OFF/RESET, AUTO and MAN lights. HT GCxxx provides for three main working modes:

- **OFF/RESET**: HT GCxxx controls the opening of GCB switch and stops the engine. Where provided, it also controls the closing of MCB switch. The anomalies are all cancelled and you can access the programming to modify the parameters.
- **MAN:** the starting and stopping of the generator will be executed by the operator. GCB switch (and, where applicable, MCB switch) opening/closing as well will be executed by the operator: HT GCxxx always allows the opening of the switches; it allows closing GCB only if the engine is started and if generator voltages and frequency are within tolerance. The controllers HT HT GC5xx automatically activate the synchronization procedure (if required) following to the closing control of a switch by the operator. If the operator puts the generator in parallel with the mains or with another group, all parallel functions are managed automatically (see [4]). Protections are active: HT GCxxx is therefore always able to open GCB switch and stop the engine. Accessing programming is allowed, though only some parameters can be modified.
- **AUTO:** the starting and stopping of the generator and the management of GCB and MCB switches (where applicable) are executed by the board (the operator cannot intervene). All protections are enabled. Accessing programming is allowed, though only some parameters can be modified.

The operating mode can be selected in two different ways:

- By using MODE UP and MODE DOWN keys on the board panel.
- Using one or several digital inputs configured with the following functions:
  - DIF.0078 - “OFF/RESET by remote control”.
  - DIF.0079 - “MAN by remote control”.
  - DIF.0080 - “AUTO by remote control”.

  When one of these inputs is active, the operating mode of the controller is forced and you can no longer use the buttons on the panel, to change it (the first line of the display shows a key-shaped icon).

  When neither of these inputs is active, you are again able to use the buttons to change the operating mode.

  If there are multiple active inputs at the same time, priority is given to the input that forces the OFF-RESET mode, followed by the one that forces MAN mode and finally the one that forces AUTO mode.

  You needn't use all three inputs. For example, you can use a single input to force AUTO status: when the input is active the controller is always in AUTO mode, and when it is deactivated, the controller remains in AUTO mode, but you can use the buttons to change-over to MAN or OFF-RESET.

  If only one input is used to force OFF-RESET mode, the controller acts differently: when the input is active, the controller is always in OFF-RESET mode, and when the input goes back on standby, the controller goes back to the mode it was in prior to input activation.

When the main working mode of HT GCxxx is AUTO, it is possible to activate two additional modes (remember that the board is still in AUTO, then what said above is valid):

- **TEST:** this operation mode differs from AUTO in the fact that the engine is anyway started (automatically), regardless of the fact that the conditions of the system require or not the automatic intervention of the generator (the "inhibitions to automatic intervention" are ignored in this mode). With P.0222 parameter ("Enabling of test power load") it is possible to indicate to the board if it should automatically close GCB switch as a result the starting of the engine (if the conditions of the system allow the closure of the switch). In any case, the operator has the possibility to control the switches as in MAN. When the TEST mode is disabled, the board returns to AUTO (when the test is finished) and, if the automatic intervention of the generator is no longer required, the board opens GCB switch (with discharge of power, if required) and stops the engine. Accessing programming is allowed, though only some parameters can be modified.

  To switch to TEST mode, the board should be in AUTO, there should be no shutdowns, deactivations and discharges, there should be no REMOTE START requests (see below) and there should be no requests for automatic intervention (see engine sequence description).

  Note: the request for the switching to TEST is lost if the automatic intervention of the generator is required (for example, if there is no mains): when the automatic intervention is no longer required, the board will not return to TEST. The request of the TEST mode from digital input is an exception: when the automatic intervention is no longer required, if the input is still active, the board will return to TEST.

  You can shift to TEST mode as follows:

  - Pressing the “START ” button on the controller's panel. Shifting to TEST mode is immediate. Just press the START key again to return to AUTO.
  - By using a digital input configured with DIF.0026 function ("Request of test mode"): the board switches into TEST when this input is activated and returns to AUTO when it is deactivated.
  - By properly configuring the parameters:
    - P.0418 (“ Weekly test calendar”).
    - P.0419 (“Test start time”).
    - P.0420 (“Test starting duration”).

    They allow selecting the days of the week and a time slot within which the working mode switches from AUTO to TEST. The controller returns to AUTO when the TEST time interval ends.
  - By means of a proper command via SMS (refer to document [8]. In order for this feature to be used, the parameter P.0420 Test starting duration shall not be set to zero. In this case, the controller shifts from TEST after receiving the SMS and returns to AUTO after the time P.0420.
  - Through a control from the serial ports. Use HOLDING REGISTER 20 Modbus register: by writing the value "6", the board switches to TEST, by writing the value "7" the board comes back to AUTO. The TEST control from the serial ports is cancelled if the board considers the communication interrupted (60 seconds without a message).

- **REMOTE START:** this operation mode differs from AUTO in the fact that the engine is anyway started (automatically), regardless of the fact that the conditions of the system require or not the automatic intervention of the generator (the "inhibition to automatic intervention" are ignored in this mode). If there are no requests for "inhibition to power load", HT GCxxx will automatically close GCB switch (with synchronization for HT HT GC5xx). The operator cannot manually control the switches. When the REMOTE START mode is disabled, the board returns to AUTO and, if the automatic intervention of the generator is no longer required, the board opens GCB switch (with

power discharge for HT HT GC5xx) and stops the engine. Accessing programming is allowed, though only some parameters can be modified.

To switch to REMOTE START mode, the board should be in AUTO or TEST and there should be no shutdowns, deactivations and discharges. Moreover, it is possible to configure an input with DIF.0029 function ("enable remote start request"): if the input exists, it should be active.

You can shift to REMOTE START mode as follows:

- Through a control sent from MC100 boards on PMCB CAN-BUS (only HT HT GC5xx).
- By means of the digital input configured with the feature DIF.0027 (“remote start request”). In this case, it is necessary pay attention to the delay that is configured for the selected input: the board switches to REMOTE START when the input is active since the configured time, it comes back to MAN as soon as the input is deactivated.
- By properly configuring the parameters:
  - P.0426 (“Intervention forcing calendar”).
  - P.0419 (“Intervention forcing start time”).
  - P.0420 (“Intervention forcing end time”).

  They allow selecting the days of the week and a time slot within which the working mode switches from AUTO to REMOTE START. The controller returns to AUTO when interval ends.
- By means of a proper command via SMS (refer to document [8]. In this case, the controller shifts to REMOTE START as soon as it receives the SMS and returns to AUTO when it receives the opposite command.
- Through a control from the serial ports. Use HOLDING REGISTER 20 Modbus register: by writing the value "18", the board switches to REMOTE START, by writing the value "19" the board comes back to AUTO. The REMOTE START control from the serial ports is not cancelled in the event of a breakdown in communication.

10.1.1 Events

The board records the following events if the working mode changes (if enabled with P.0441=99):

- EVT.1001: the new mode is “OFF/RESET”.
- EVT.1002: the new mode is “MAN”.
- EVT.1003: the new mode is “AUTO”.
- EVT.1004: the new mode is “TEST”.
- EVT.1005: the new mode is “REMOTE START”.

10.1.2 Signallings

The following functions for the configuration of the digital outputs are related to the operation mode of the board:

- DOF.0005: the output is activated if the board is in TEST.
- DOF.0019: the output is activated if the board is not in OFF/RESET.

- DOF.0020: the output is activated if the board is in AUTO, TEST or REMOTE START.
- DOF.0022 ("Bit mapping"): the individual bits that indicate OFF/RESET, MAN, AUTO, TEST and REMOTE START are available.
- DOF.0103 (Logics AND/OR)
    - ST.000: the output is activated if the board is in OFF/RESET.
    - ST.001: the output is activated if the board is in MAN.
    - ST.002: the output is activated if the board is in AUTO.
    - ST.003: the output is activated if the board is in TEST.
    - ST.004: the output is activated if the board is in REMOTE START.

10.2 Mains sensor / parallel bars

HT GCxxx has a three-phase sensor (JF) that can be used to acquire voltages and frequency of the mains.

Only for HT HT GC5xx, the sensor can also be used to acquire voltages and frequency of the parallel bars of the system. P.0126 parameter determines whether this sensor is connected to the mains or to the parallel bars:

- P.0126=0: parallel bars.
- P.0126=1: mains.

Normally, for the types of systems composed of multiple generators (only HT HT GC5xx), the sensor is used to measure the voltage on the parallel bars (in these cases, the mains is normally acquired by a MC100 board). On the contrary, for systems which consist of a single generator, it is preferred to acquire the mains. It is not mandatory to act in this way.

The board uses parameters to configure the sensor, regardless of its use for the mains or for the parallel bars:

- P.0105: rated frequency (Hz).
- P.0116: mains/bars nominal voltage Phase-to-phase rated voltage shall be set for three-phases systems; single-phase, for single phase systems.
- P.0119: indicates a three-phases mains/bars (3) or a single-phase one (1).
- P.0117: value of the primary (Vac) of any voltage transformers linked to JF connector.
- P.0118: value of the secondary (Vac) of any voltage transformers linked to JF connector.

Note: if nominal voltage (P.0116) is set to zero, the board will anyway perform measures and display them, but for system management purposes, the tension is considered as not present.

10.2.1 Sensor for the parallel bars (HT HT GC5xx)

This description applies only to HT HT GC5xx. Definition:

- For systems which consist of more generators, "parallel bars" indicate that part of the circuit in which the lines of the alternators are linked. It can be separated from the users by MGCB switch.
- For systems consisting of a single generator, "parallel bars" indicate users.

HT HT GC5xx needs to verify the presence of voltage on the parallel bars, to verify if a switch (GC, but also MCB) can be closed without synchronization.

The information "no voltage on parallel bars" can be acquired in two ways:

- Using the mains/bars sensor for parallel bars (P.0126=0). In this way, the board uses a fixed threshold corresponding to 33% of rated voltage (with a 3% hysteresis): if all measured voltages are below this threshold, the parallel bars are considered to be "voltage free".
- Use a digital input configured with DIF.0050 function ("No voltage on parallel bars"): when the input is active, the parallel bars are considered to be "voltage free".

10.2.1.1 Signallings

This description applies only to HT HT GC5xx. The following functions for the configuration of the digital outputs are connected to the voltage on the parallel bars:

- DOF.0037 ("Voltage on parallel bars"): the output is activated if there is voltage on the parallel bars.
- DOF.0103 (“Logics AND/OR”):
    - ST.048: the output is activated if there is voltage on the parallel bars.

10.2.2 Mains sensor

Depending on the type of system, HT GCxxx may need to determine the status of the mains, for two reasons:

- For the systems that perform emergency service to the mains, to control automatic start and stop of the engine in case of anomalies on the mains (this is the only possibility for HT GC3XX).
- For systems that require the parallel with the mains, to verify whether the status of the mains allows the parallel and, if the parallel is already underway, to disconnect the generator in case of anomalies of the mains (only HT HT GC5xx).

See the document [4] for a description of the use of the mains sensor for the purpose of the parallel with the mains (only HT HT GC5xx). This chapter instead describes the use of the mains sensor for the emergency service.

HT GCxxx can determine the status of the mains in three ways, described below.

10.2.2.1 Status of the mains acquired by a MC100 board (HT HT GC5xx)

This description applies only to HT HT GC5xx.

If one or more MC100 boards are connected to the PMCB CAN-BUS, HT HT GC5xx uses as status of the mains the one transmitted by these boards. MC100 boards can only be used on systems composed of multiple generators, where, as a rule, the controllers HT GCxxx do not directly measure the mains. If different MC100s transmit the status of their mains, HT HT GC5xx creates a "global" status with the following logics (assessed in the order in which they are described):

- If at least a MC100 board indicates that the mains is steadily "present but out of tolerance", then for HT HT GC5xx the mains is steadily "present but out of tolerance".
- If at least a MC100 board indicates that the mains is steadily "not present", then for HT HT GC5xx the mains is steadily "not present".
- If at least a MC100 board indicates that the delay due to "mains out of tolerance" is in process, then for HT HT GC5xx the delay due to "mains out of tolerance" is in process.
- If at least a MC100 board indicates that the delay due to "mains within tolerance" is in process, then for HT HT GC5xx the delay due to "mains within tolerance" is in process.
- For HT HT GC5xx the mains is steadily "within tolerance".

The delays for "mains within tolerance" and "mains out of tolerance" are managed by MC100, then P.0205 and P.0206 parameters are ignored.

If HT HT GC5xx receives the status from the mains from MC100, it ignores its internal sensor and any external sensors connected to its digital inputs.

If two MC100 boards transmit different values for the status of presence of the mains, this situation is warned by a fast flashing (5% on) of the "MAINS LIVE" light.

10.2.2.2 Mains status acquired by a digital input.

It is possible to configure a digital input with DIF.0060 function ("External mains sensor"): HT GCxxx considers the mains "within tolerance" if the digital input is active. The delays configured with P.0205 and P.0206 parameters apply in this case (see 10.2.2.4).

If there is a digital input configured with DIF.0060 function, it is also used if the internal sensor is enabled (see next paragraph): in this case HT GCxxx considers the mains "within tolerance" if the digital input is active (whatever the voltage connected to the internal sensor is); but if the digital input is not active, HT GCxxx uses the mains status acquired by the internal sensor.

Only HT HT GC5xx: if there is no digital input configured with DIF.0060 function, and if the board cannot use the internal sensor to acquire the status of the mains, it is possible to use the digital input (if any) dedicated to the protections for the parallel with the mains (see document [4]) also to determine the status of the mains for the emergency service. This input is configured with DIF.0039 function ("External protections for the parallel with the mains"). The mains is considered to be "within tolerance" if the digital input is active (the delays configured with P.0205 and P.0206 parameters apply in this case - see 10.2.2.4).

10.2.2.3 Mains status acquired by the internal sensor

Only HT HT GC5xx: In order to use the mains/bars sensor to acquire the status of the mains, P.0126 parameter should be set to "1-mains". Refer to 10.2 the parameters that configure the mains/bars sensor.

In order to assess the mains status, the controller can perform up to four different checks that can be individually disabled. These checks are individually described (with examples) below: please, remember that disabling both voltages and frequency checks is not possible (in this case, mains is always considered not present).

10.2.2.3.1 Frequency check

Parameter	Description	Default value	Frequency in Hz
P.0105	Rated frequency	50 Hz	50.00
P.0236	Low frequency threshold	90.0 %	45.00
P.0237	High frequency threshold	110.0 %	55.00
P.0201	Maximum hysteresis	2.5 %	1.25

To disable this check, one of the following conditions shall be true:

- P.0236 = 0%.
- P.0237 = 0%.
- P.0237 = 200%.
- P.0236 >= P.0237

The hysteresis on the various thresholds is calculated as half the difference between P.0237 and P.0236. However, it is limited by the maximum value set with parameter P.0201. The hysteresis applies to:

- Upwards towards minimum frequency threshold (i.e., with the default values of the parameters, between 45.00 Hz and 46.25 Hz).
- Downwards towards maximum frequency threshold (i.e., with the default values of the parameters, between 53.75 Hz and 55.00 Hz).

These values define the following bands:

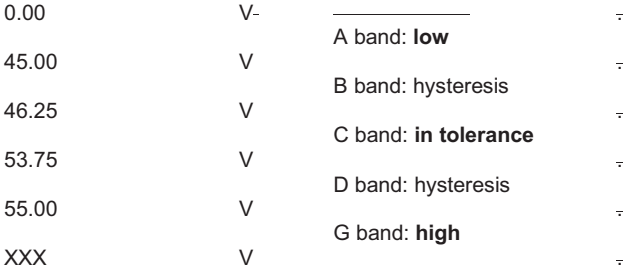

If the frequency is within the bands “B” o “D”, previous status is maintained (hysteresis). For example, in case the voltage was within the “C” band and is now within the “D” band, it is anyway considered “In tolerance”. On the other hand, in case the frequency was within the “C” band, and now is within “D” band, it is considered “Low”.

10.2.2.3.2 Voltages check

Parameter	Description	Default value	Voltage in Vac
P.0119	Number of phases.	3	-
P.0116	Rated voltage	400 Vac	400
-	Mains presence threshold	20.0 %	80
P.0203	Low voltage threshold	80.0 %	320
P.0204	High voltage threshold	110.0 %	440
P.0201	Maximum hysteresis	2.5 %	10

To disable this check, one of the following conditions shall be true:

- P.0203 = 0%.
- P.0204 = 0%.
- P.0204 = 200%.
- P.0203 >= P.0204

The hysteresis on the various thresholds is calculated as half the difference between P.0204 and P.0203. However, it is limited by the maximum value set with parameter P.0201. The hysteresis applies to:

- Downwards towards mains presence threshold (i.e., with the default values of the parameters, between 70 Vac and 80 Vac).
- Upward towards low voltage threshold (i.e., with the default values of the parameters, between 320 Vac and 330 Vac).
- Downwards towards high voltage threshold (i.e., with the default values of the parameters, between 430 Vac and 440 Vac).

These values define the following bands:

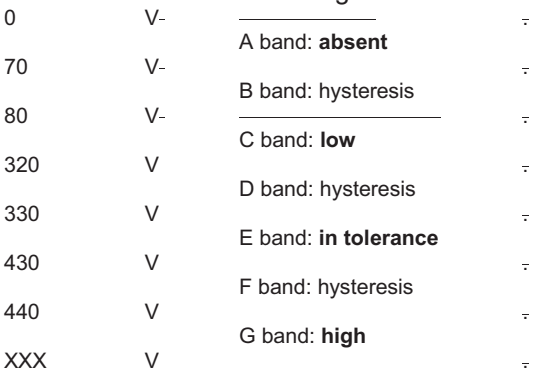

If the voltage is in the “B”,”D” or ”F” bands, previous status is maintained (hysteresis). For example, if the voltage was in the “E” band and now it is in “D” band, it is considered however “In tolerance”. On the contrary, if voltage was in the “C” band and now is in “D” band, it is considered “Low”.

The status are managed at individual phase level.

10.2.2.3.3 Unbalance check

Parameter	Description	Default value	Voltage in Volts
P.0116	Rated voltage	400 Vac	400
P.0238	Mains unbalance threshold	10.0 %	40
P.0201	Maximum hysteresis	2.5 %	10

In three-phases systems, the mains can be 'out of tolerance' in case the absolute value of the three phase-to-phase voltages differs more than the set threshold. The control is disabled on single-phase systems.

Note: HT GCxxx makes no verification on the displacement angle of the three phases, but only on the amplitude of phase-to-phase voltages.

To disable this check, simply set parameter P.0238 to zero.

The hysteresis is set with P.0201 parameter. The hysteresis is applied downwards. With the default values of the parameters, if the difference in absolute value between whatever two phase-to-phase voltages is higher than 40 Vac, the mains is considered out of tolerance. If the differences in absolute value among phase-to-phase voltages are all lower than 30 Vac (40 – 10), the mains is considered within tolerance.

10.2.2.3.4 Rotation direction check

Parameter	Description	Default value
P.0239	Required phase sequence	0-None

For three-phases systems mains can be 'out of tolerance' in case the rotation direction of the three phase-to-phase voltages differs from the specification set with parameter P.0239. On single-phase systems this control is disabled.

To disable this check, simply set parameter P.0239 to “0-None”.

With P.0239 parameter it is possible to select the direction of rotation required for the mains: "1-clockwise" or "2-anticlockwise". The mains is considered "out of tolerance" if the actual direction of rotation differs from the configured one.

10.2.2.3.5 Internal sensor status

In order to diagnose the mains “global” status, the following algorithms are used, shown in their computing order:

- If **all** voltages **and** frequency are in a status of "Not present", also the global status is "Not present".
- If **all** voltages **and** frequency are in a status of "Within tolerance", also the global status is " Within tolerance". In this case, if the control of the direction of rotation or the control on the asymmetry do not give a positive outcome, the mains is considered "Low".
- In case the status of at **least** one voltage **or** the frequency is “High”, also the global status is “High”.
- In case none of the previous conditions occurs, global status is “Low”.

10.2.2.4 Mains global status

What described in this paragraph **shall not apply** if the status of the mains is acquired via PMCB CAN-BUS or via one or more MC100 boards (only HT GC5xx).

Whichever the method used to acquire the mains instant status, to the extent of the plant operation logics, the mains global status is described in four steps:

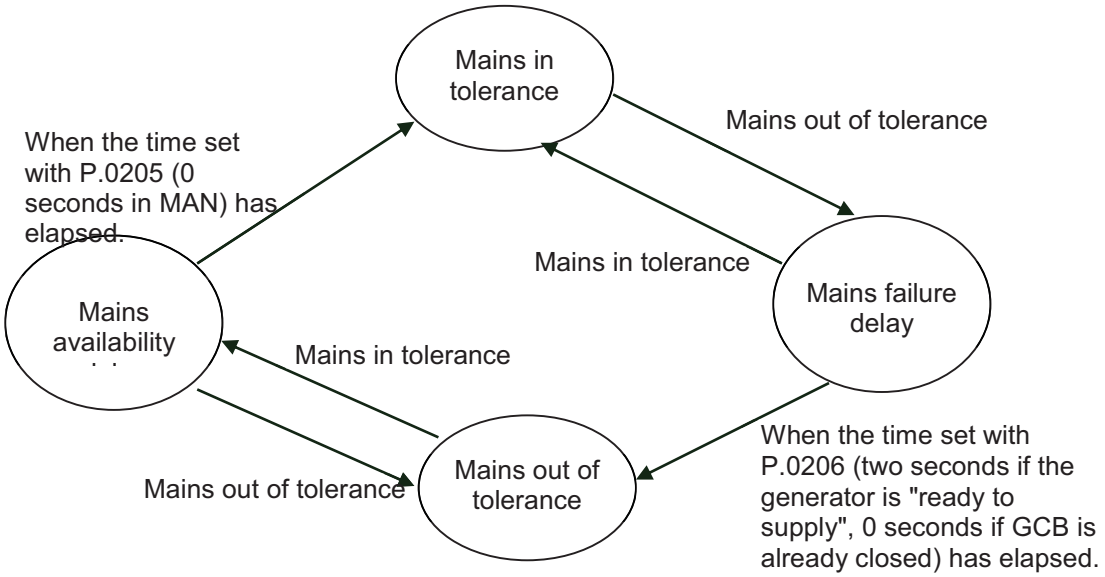

10.2.2.5 Events

The board records the following events if the status of the mains varies (if P.0441 >= 4):

- EVT.1010: the new status of the mains is steadily "not present or out of tolerance".
- EVT.1011: the new status of the mains is “present out of tolerance”.
- EVT.1012: the new status of the mains is steadily “within tolerance”.

10.2.2.6 Signallings

The MAINS LIVE light indicates the status of the mains (see description in 6.2).

The following functions for the configuration of the digital outputs are linked to the status of the mains:

- DOF.0006 (“Mains within tolerance”): the output is activated if the mains is steadily within tolerance or during the delay due to "mains out of tolerance".
- DOF.0022 (“Bit mapping”): there are the bits that indicate:
  - Mains present (although not within tolerance).
  - Mains steadily within tolerance.
- DOF.0103 (“Logics AND/OR”):
  - ST.016: the output is activated if there is voltage on the mains (even if it is out of tolerance).
  - ST.017: the output is activated if the mains is steadily "out of tolerance" (or not present).
  - ST.018: the output is activated when the mains is instantly within tolerance, and the delay due to "mains within tolerance" is ongoing.
  - ST.019: the output is activated if the mains is steadily "within tolerance".
  - ST.020: the output is activated when the mains is instantly out of tolerance (or not present), and the delay due to "mains out of tolerance" is ongoing.

The following functions for the configuration of the analogue outputs are linked to the management of the mains. The outputs are controlled according to the dimension of an

analogue value of the mains. Use the "conversion curves" to adapt the single value to the output (0-100%):

- AOF.3201 ("mains frequency").
- AOF.3211 ("average mains voltage").
- AOF.3221 ("active mains power").

The following measures on the mains can be "copied" into virtual analogue inputs, by using the following functions:

- AVF.4012 (“mains/bars frequency”).
- AVF.4017 (“mains/bars L1-L2 or L1-N voltage”).
- AVF.4018 (“mains/bars L2-L3 voltage”).
- AVF.4019 (“mains/bars L3-L1 voltage”).
- AVF.4020 (“mains/bars L-L medium voltage”).

10.3 Generator

HT GCxxx acquires generator (single or three-phase) voltage and frequency in order to protect the loads and the generator itself from operating outside its tolerance thresholds.

To connect the generator to HT GCxxx, see opening paragraphs.

10.3.1 Nominal sizes

Set the generator rated voltage in P.0102 parameter (Vac, set the phase-to-phase rated voltage on three-phase systems). Set the generator rated frequency in P.0105 parameter (Hz). Set the generator rated power in P.0106 parameter (kVA).

It is important to set these data because the thresholds for some protections are expressed as their percentage. Moreover, the board calculates the rated current of the system from these parameters:

Single-phase system: $$I_{nom} = \frac{P.0106 * 1000}{P.0102}$$

Three-phases system: $$I_{nom} = \frac{\left((P.0106 * 1000) / 3 \right)}{\left(P.0102 / \sqrt{3} \right)}$$

10.3.2 Frequency

Parameter	Description	Default value	Frequency in Hz
P.0105	Rated frequency	50 Hz	50.00
P.0228	Stopped engine threshold due to frequency	10.0 %	5.00
P.0229	Started engine threshold due to frequency	20.0 %	10.00
P.0305	Minimum frequency threshold	90.0 %	45.00
P.0307	Maximum frequency threshold	110.0 %	55.00

Considering the default values shown in the table, the following brackets are identified:

0.00 Hz
A band: **absent**
5.00 Hz
B band: hysteresis
10.00 Hz
C band: **low**
45.00 Hz
D band: **in tolerance**
55.00 Hz
E band: **high**
XXX Hz

The only managed hysteresis band is the one used to diagnose the stopped or running engine status. Thresholds P.0305 and P.0307 are used also to manage the generator protections on frequence. These protections can be individually disabled setting to zero the relevant parameter that specifies the delay (respectively P.0306 and P.0308). Even if the protections are disabled, thresholds are however used in order to define the frequency status: this allows not to switch the loads on the generator if the electrical magnitudes are out of the tolerance band.

10.3.3 Voltages

Parameter	Description	Default value	Voltage in Volts
P.0102	Rated voltage	400 Vac	400
P.0226	Stopped engine threshold due to voltage	17.5 %	70
P.0227	Started engine threshold due to voltage	20.0 %	80
P.0301	Minimum voltage threshold	75.0 %	300
P.0303	Maximum voltage threshold	112.5 %	450
P.0202	Hysteresis	2.5 %	10

The hysteresis on the various thresholds is set with P.0202 parameter. The hysteresis applies to:

- Upwards towards the minimum voltage threshold (thus, with the default values of the parameters, between 300 Vac and 310 Vac).
- Downwards towards maximum voltage threshold (i.e., with the default values of the parameters, between 440 Vac and 450 Vac).

These values define the following bands:

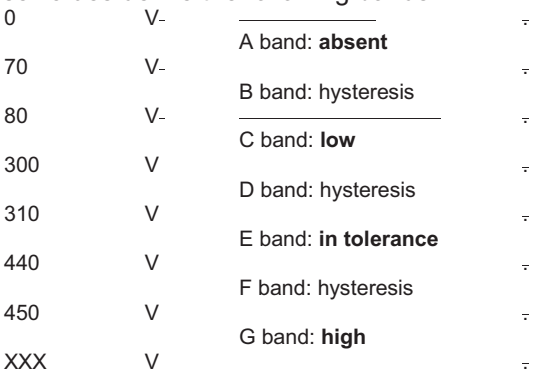

If the voltage is in the “B”, “D” or “F” bands, previous status is maintained (hysteresis). For example, if the voltage was in the “E” band and now it is in “D” band, it is considered however “In tolerance”. On the contrary, if voltage was in the “C” band and now is in “D” band, it is considered “Low”.

These controls are managed at a single-phase level. In three-phase systems phase-to-phase voltages are used, phase voltage in single-phase systems.

Thresholds P.0301 and P.0303 are used also to manage the generator protections on voltage. These protections can be individually disabled setting to zero the relevant parameter that specifies the delay (respectively P.0302 and P.0304). Thresholds are however used in order to define voltage status: this allows not to switch the loads on the generator if the electrical magnitudes are out of the tolerance band, even though protections are disabled.

10.3.4 Overview

In order to diagnose the "global" status of the generator, the following algorithms are used, computed in the order they are presented:

- If **all** voltages **and** frequency are in a status of "Not present", also the global status is "Not present".
- If **all** voltages **and** frequency are in a status of "Within tolerance", also the global status is " Within tolerance".

- In case the status of at **least** one voltage or the frequency is “High”, also the global status is “High”.
- In case none of the previous conditions occurs, global status is “Low”.

10.3.5 Generator status.

For general management purposes, generator operation can be described in three steps:

- Steady out of tolerance: the generator voltages and/or frequency status must be continuously other than “In tolerance” for two seconds.
- Steady within tolerance: generator's voltage **and** frequency global status must be “within tolerance” for at least 0.5 seconds.
- Transitory: during the transition between the two previous statuses.

10.3.6 Events

The boards records the following events if the status of the generator varies (se P.0441 >= 1):

- EVT.1020: the new status of the generator is steadily "not present or out of tolerance".
- EVT.1021: the new status of the generator is "present out of tolerance".
- EVT.1022: the new status of the generator is steadily "within tolerance".

10.3.7 Signallings

The situation of the generator is uninterruptedly displayed by the "GENERATOR LIVE" light (see par. 6.2).

The following functions for the configuration of the digital outputs are related to the status of the generator:

- DOF.0007 (“Generator within tolerance”): the output is activated if the generator is steadily within tolerance, or in the delay before stating it "out of tolerance".
- DOF.0022 (“Bit mapping”): there are the bits that indicate:
  - Generator present (even if not within tolerance).
  - Generator permanently within tolerance.
- DOF.0103 (“Logics AND/OR”):
  - ST.024: the output is activated if there is voltage on the generator (even if it is out of tolerance).
  - ST.025: the output is activated if the generator is steadily "out of tolerance" (or absent).
  - ST.026: the output is activated when the generator is instantly within tolerance, and the delay due to "generator within tolerance" is in progress.
  - ST.027: the output is activated if the generator is steadily "within tolerance".
  - ST.028: the output is activated when the generator is instantly out of tolerance (or absent), and the delay due to "generator out of tolerance" is in progress.

The following functions to configure the analogue outputs are linked to the management of the generator. The outputs are controlled according to the dimension of an analogue value of the generator. Use the "conversion curves" to adapt the single value to the output (0-100%):

- AOF.3101 ("generator frequency").

- AOF.3111 ("generator average voltage").
- AOF.3121 ("generator active power").

The following measures on the generator can be "copied" into virtual analogue inputs, by using the following functions:

- AVF.4001 ("generator frequency").
- AVF.4006 (“generator L1-L2 or L1-N voltage”).
- AVF.4007 (“generator L2-L3 voltage”).
- AVF.4008 (“generator L3-L1 voltage”).
- AVF.4009 (“generator L-L average voltage”).

10.4 Current

HT GCxxx is able to measure the three phase currents plus a fourth auxiliary current.

Normally HT GCxxx measures the three phase currents of the generator. But it is also able to measure the currents on the users: the advantage is that the board is able to measure currents and powers absorbed by the users even when they are connected to the mains. Use P.0124 parameter:

- P.0124=0. In this case, HT GCxxx assumes that the current transformers are connected on the generator lines. This is essential for systems composed of multiple generators (HT GC5xx).
- P.0124=1. In this case, HT GCxxx assumes that current transformers are connected to user's lines. The board combines current measurements to the mains **if GCB switch is being opened**, to the generator if it is being closed.

The board measures the three currents in true RMS voltage and calculates (the same in true RMS voltage) for each phase:

- The active power (kW).
- The active power in kvar (kvar).
- Apparent power (kVA).
- Power factor.
- Type of load (inductive or capacitive).

For three-phase systems, it also calculates total values. On the totals, the board calculated both power factor and cos(ϕ). The difference lies in the method of calculation:

- Power factor: it is calculated from total active power (kW) and apparent power (kVA) of the system.
- Cos (ϕ) is calculated from total active power (kW) and reactive power (kvar) of the system.

Finally, the board also manages active energy (kWh) and reactive energy (kVarh) meters, calculated on total active and reactive power measures. The active energy meter is incremented only if active power is positive (it does not count in case of "reverse power"). The reactive energy meter counts in absolute value (it does not distinguish between inductive and capacitive load).

If current transformers are placed on users, the board manages two active energy meters and two reactive energy ones: one pair is managed when the users are connected to the generator, the other pair when the users are connected to the mains.

The following functions for the configuration of analogue outputs are related to the management of currents/powers. The outputs are controlled according to the dimension of an analogue value. Use the "conversion curves" to adapt the single value to the output (0-100%):

- AOF.3121 ("generator active power").

The following measures can be "copied" into virtual analogue inputs, by using the following functions:

- AVF.4023 - ("Current phase L1")
- AVF.4024 - ("Current phase L2")

- AVF.4025 - ("Current phase L3")
- AVF.4031 ("active power phase L1").
- AVF.4032 ("active power phase L2").
- AVF.4033 ("active power phase L3").
- AVF.4034 - ("Total active power")
- AVF.4041 - ("Total apparent power")
- AVF.4047 - ("Total reactive power")
- AVF.4058 ("total power factor").
- AVF.4059 (“Total Cos(ϕ)”).
- AVF.4063 ("active power").
- AVF.4065 ("reactive power").
- AVF.4069 ("active power - users supplied by the mains").
- AVF.4071 ("reactive power - users supplied by the mains").

INFORMATION!: by copying a "power factor" or a "cos(ϕ)" in a virtual analogue input, in the management of any thresholds, it is necessary to keep in mind the international convention through which the board represents this data in case of "capacitive" or "inductive" load:

- "Inductive": the values for "power factor" or "cos(ϕ)" are numbers between 0 and 1.
- "Capacitive": the valuesfor "power factor" or "cos(ϕ)" are numbers between 1 and 2. To calculate the real value, it is necessary to calculate "2-read value". A power factor of "capacitive 0.85" internally is represented as 1.15.

10.4.1 Fourth current

The measure of the fourth current is completely independent from the three main currents. To use this measure, it is first necessary to enable measurement input, by setting P.0109 parameter:

- 0: disabled input
- 1: a current transformer is connected to the input. Set the primary of the transformer in the P.0108 parameter.
- 2: a toroid is connected to the input (it requires a hardware option). Set the transformation ratio of the toroid in P.0108 parameter.

It is then necessary to select on which line it is connected to, with P.0130 parameter:

- 0: on a generator line.
- 1: on a users' line.
- 2: on a mains line.

If the transformer is positioned on line L1 of the mains, HT GCxxx can calculate the imported/exported power from/to the mains. It is however necessary to:

- Set P.0131 parameter to "4".

- The board measures the power only on phase L1. For three-phase systems then it multiplies it by three, by assuming that the load is balanced. If it is not, it is possible to counterbalance the imbalance by adjusting P.0132 parameter.

It is possible to activate an anomaly on this current: set the threshold in P.0367 parameter and the delay in P.0368 parameter.

The following measures can be "copied" into virtual analogue inputs, by using the following functions:

- AVF.4026 (“auxiliary current.”).

10.5 Engine

HT GCxxx can start, stop and protect the engine by means of a series of thresholds on the acquired measures (oil pressure, coolant temperature, speed etc.).

10.5.1 Nominal power

HT GCxxx allows specifying the rated power of the engine (P.0125 parameter, in kW). It is important to set this figure, because the thresholds for some protections are expressed as its percentage.

Moreover, for CG5xx, all PID controllers that manage the active power during delivery in parallel with other generators or with the mains, work with percentages of power values referred to this parameter: the modification of this parameter may require a new calibration of PI controllers (see document [4]).

10.5.2 Rated engine speed

HT GCxxx allows setting engine rated speed via P.0701 parameter (rpm). The thresholds for the acknowledgement of started engine status and the one for overspeed protection are always expressed as a percentage, always with reference to this value, even in case DIF.0063 function were activated - "Select 1800 rpm": when this input is activated, the rated rotation speed becomes "1800 rpm", regardless of what configured with P.0701. The change in rotation speed with the one configured in P.0701 and 1800 rpm (and vice versa) is performed only with the board in OFF/RESET and with stopped engine.

This rated "variable" rpm. speed is used to manage engine speed control via CAN-BUS (CAN0): many electronic engines, in fact, accept a control via CAN-BUS to switch between 1500 and 1800 rpm. For HT GC5xx boards, it is also used to adjust speed and power in parallel logics.

10.5.3 Engine speed (RPM)

The board is able to perform a measurement of the engine rotation speed, in order to display it, optionally use it to diagnose the statuses of started/stopped engine, and optionally use it to manage a maximum speed protection (A018).

HT GCxxx can acquire this measure in different ways, listed in the order in which they are assessed:

- The measure can be acquired by a pick-up on the engine. See par. 5.1.10.1. To enable this measure, in P.0110 parameter the number of teeth of the rim on which the pick-up works should be set. This is a known value and, anyway, easily computed If P.0110 is set to a nonzero value, the following points are ignored.
- The measure can be acquired by the signal W of the engine battery charging alternator. See 5.1.10.2.
    - If P.0111 is set to a nonzero value, the following points are ignored.
- To determine the engine speed, the generator frequency can also be used. In this case, it is necessary to set the known ratio between engine rotation speed and the frequency of the generator in P.0127 parameter, and P.0110 and P.0111 parameters should set to zero. For example, a normal generator works at 1500 rpm to deliver 50Hz: set P.0127 to 30 (1500/50). If P.0127 is set to a nonzero value, the following points are ignored.
- The board can also read the engine rotation speed directly from the electronic control unit (ECU) of the engine itself through the CAN0 CAN-BUS. To do this, it is simply necessary to enable the CAN-BUS (P.0700 different from zero), and P.0110, P.0111 and P.0127 parameters should be set to zero.

10.5.4 Engine running/stopped status acknowledgement

There are six possible ways to define whether the engine is running or not:

- Directly from the electronic control unit (ECU) of the engine (if connected via CAN0 CAN-BUS, P.0700 <> 0).
- Engine speed (RPM) The engine is considered to be in motion if the rotation speed is above P.0225 threshold ("Started engine threshold (rpm)"; it is considered stopped if the rotation speed is below P.0224 threshold ("Stopped engine threshold (rpm)"). This control is not used if:
    - The rotation speed is not available (see 10.5.3).
    - P.0224=0.
    - P.0225=0.
    - P.0224 > P.0225.
- The board recognizes the presence of voltage on terminals 4 and 5 of JH (D+) connector: this voltage indicates that the battery-charger alternator of the engine is delivering current, and being driven by the engine itself, it also indicates that the engine is running. This control is not used if the board is not configured to use the D+ signal (P.0115 set to 0 or 2).
- From low and/or minimum lubricant pressure contacts. Note : this control is only available on the contacts, not with measurement thresholds on lubricant pressure measurement. The engine is considered to be in motion if at least one of the contacts is open (if there is pressure); it is considered stopped if all the contacts are closed (no pressure). This control is not used if:
    - No digital input acquires low and/or minimum lubricant pressure contacts (no input configured with DIF.0013 and DIF.0014 functions).
    - If P.0232 parameter ("Engine started from oil pressure contacts") is set to zero.
- From generator voltage. The engine is considered to be in motion if voltage on **at least one** phase is higher than P.0227 threshold ("Threshold for started engine (V)"); it is considered stopped if voltage is lower than P.0226 threshold ("Threshold for stopped engine (V)"). This control is not used if:
    - P.0226=0.
    - P.0227=0.
    - P.0226 > P.0227.
- From generator frequency. The engine is considered to be in motion if the frequency is above P.0229 threshold ("Started engine threshold (Hz)"; it is considered stopped if the frequency is below P.0228 threshold ("Stopped engine threshold (Hz)"). This control is not used if:
    - P.0228=0.
    - P.0229=0.
    - P.0228 > P.0229.

To acknowledge engine running status, at least one of the previous conditions must be continuously present for at least **0.2** seconds. The controller disables the starter command (and prevents other activations of the same) if it detects the engine running.

The engine is considered stopped if all the previous conditions are met (all the enabled ones) continuously for **five** seconds**.**

10.5.5 Engine commands

The board handle many digital outputs to control the engine. In the table below, there is the list of functions for the configuration of digital outputs, with an acronym used below and a description:

Function	Acronym	Description
DOF.0002	**GLOW_PLUGS**	Command for Diesel engines glow-plugs preheating.
DOF.0025	**ECU_ENABLE**	Enabling control for the engine control unit. It is activated along with the FUEL control, but may be deactivated after the FUEL control (useful to stop electronic engines, without causing vacuums in the fuel pipes).
-	**FUEL**	Fuel solenoid valve control.
DOF.0014	**GAS**	Gas solenoid valve control (gas engines only).
DOF.0034	**START**	Starter motor control.
DOF.0016	**STOP**	Solenoid control for the stopping of the engine.
DOF.0023	**IDLE**	Control to activate engine reduced speed (IDLE).
DOF.0038	**BATT1**	Control used to manage the dual battery.
DOF.0039	**BATT2**	Control used to manage the dual battery.
DOF.0024	**PREHEAT**	Engine preheating control.

The output connected to JH-3 terminal is not configurable and is internally pre-assigned to FUEL function. This function is not assignable to any other output.

All the other digital outputs of the board are configurable, so it is possible to associate engine controls in any way to the outputs of the board (use P.0581 parameters for output 1 and the equivalents for the other outputs, with the functions listed in the table). With the factory configuration of parameters, some controls are pre-assigned:

- STOP: output 1 (JI-1).
- START: output START (JH-1).
- FUEL: output FUEL (JH-3).

As follows, the controls are described individually.

Note: for electronic engines connected via CAN0 CAN-BUS to HT GCxxx, many of these controls are managed directly through the CAN-BUS connection, and therefore it is not necessary to configure the outputs. If the outputs are configured, the board controls them, regardless of the fact that the engine is connected in CAN-BUS.

10.5.5.1 Engine preheating control (PREHEAT).

The board is capable of controlling an external heating system, in order to maintain the temperature of the engine cooling liquid above a specific temperature. This to heat the engine as a whole, so that it is ready to deliver at any time.

This function is disabled if the board does not acquire the temperature of the coolant, neither via CAN-BUS from the engine control unit (P.0700 = 0), nor through the dedicated analogue input (P.0113 = 0), nor from the generic analogue inputs (AIF.1111 function).

The function is configured via P.0355 and P.0356 parameters:

- P.0355: temperature below which the heating system must activate.
- P.0356: temperature above which the one the heating system must deactivate.

The threshold P.0356 must be set to a value higher than P.0355: the two thresholds guarantee a hysteresis in order to avoid continue turn the heating system on/off due to minimum temperature shifts. The heating activates if the temperature drops below the threshold P.0355 for at least **one** second; it turns off when the temperature rises above the threshold P.0356 for at least **one** second.

This function is always active, even when the engine is running: it is clear however that when the engine is running, the temperature of the coolant will always be higher than P.0356 threshold, therefore the heating system will always be disabled.

10.5.5.2 Glow plugs pre-heating control (GLOW_PLUGS).

This control is intended for the old diesel engines, for which it was necessary to heat glow plugs before starting the engine. It can anyway be used to insert a delay between the opening of the fuel solenoid valve and the control of the starter motor: sometimes, in fact, if the two controls are activated together, the depression caused in the fuel pipes by the action of the motor starter does not allow the correct opening of the solenoid valve (the valve gets stuck).

To enable this function, it is necessary to set P.0209 parameter ("Pre-heating cycle duration") to a value other than zero.

The board activates the glow plugs pre-heating control the at the beginning of the starting cycle, along with the opening of the fuel solenoid valve. The output remains active throughout the glow plugs pre-heating cycle: it ends after P.0209 seconds. When the cycle ends, the starting sequence goes on (with the starter motor control): the glow plugs pre-heating control remains active until the engine actually starts or until the starting sequence is interrupted. In case of repeated attempts to start, the glow plugs pre-heating control goes on: the time configured with P.0209 is counted, but only during the first attempt.

P.0209 parameter is shared with the washing cycle for gas engines. If an output of the board is configured for the **GAS** control, the preheating cycle of glow plugs will not run.

10.5.5.3 Using two battery sets (BATT1 e BATT2)

The controller can control engine startups alternately managing two battery sets in order to ensure engine startups. To use this function requires at least one output configured with function DOF.0039 (BATT2).

If only BATT2 output is configured, then the board deactivates this output to select battery #1, it activates this output to select battery #2.

If both BATT1 and BATT2 outputs are configured, then the active board activates BATT1 output to select battery #1 and BATT2 output t select battery #2. It also guarantees a minimum time of **two** seconds with both outputs off during the shift between battery #1 and battery #2.

Finally, HT GCxxx guarantees a minimum delay of **two** seconds between the selection of a battery and the starter motor control.

In automatic, the board performs on battery #1 the number of starting attempts configured with P.0211 parameter. If the engine does not start, it switches on battery # 2 and performs again the same number of starting attempts. If the engine has not been started yet, it activates A022 shutdown ("failure to start"). In manual mode, the board always performs only one starting attempt, and then it always performs it on battery #1.

The automatic starting sequence is:

- Only if BATT1 output exists: BATT1 output **enabled**, BATT2 output **disabled**.
- Only if BATT1 output exists: 2-second wait (note 2).

- First startup attempt.
- Pause
- …...
- Last startup attempt.
- Only if BATT1 output exists: 2-second wait.
- Only if BATT1 output exists: BATT1 output **disabled**, BATT2 output **enabled**.
- 2 seconds delay
- BATT1 output **disabled**, BATT2 output **enabled**.
- 2 seconds delay.
- First startup attempt with the second battery.
- Pause
- …...
- Last startup attempt with the second battery.
- Failed startup alarm.
- 2 seconds delay.
- BATT1 output **disabled**, BATT2 output **disabled**.

Note 1: the **two**-second initial delay between the selection of battery #1 and the starter motor control is performed at the same time of the glow plugs pre-heating cycle, and it could be extended to the time configured in P.0209.

If the engine starts up, the sequence ends. The output BATT1 or BATT2 active in that moment is disabled after a **2** seconds delay after detecting started engine.

10.5.5.4 Control to enable the engine control unit (ECU_ENABLE)

10.5.5.5 Fuel solenoid valve control (FUEL)

These two controls are activated simultaneously at the beginning of the starting sequence. Both remain active even with started engine, until the starting of the shutdown sequence:

- The ECU_ENABLE control is removed immediately at the beginning of the shutdown sequence.
- The FUEL control is removed after P.0234 seconds ("delay between STOP and FUEL controls") from the starting of the stopping cycle.

The FUEL control should be used to control the solenoid valve placed on the fuel line. At the beginning of the starting sequence, the board opens the valve, thus allowing the fuel to get to the engine. At the beginning of the stopping sequence, the board closes the solenoid valve: the engine receives no more fuel and then it stops.

The ECU_ENABLE control should be used to give a consent to the starting of electronic control units of the engines. Lacking this consent, it is reflected in the shutdown of the fuel injection system: therefore, without this consent then the engine cannot start, but instead it will be stopped if it was running.

If ECU_ENABLE (not present) or STOP (present) controls are used to stop the engine, but a solenoid valve is anyway present on the fuel line, it is possible that the vacuum in the fuel circuit caused by the engine that is stopping may prevent the correct movement of the solenoid valve. In these cases, by using P.0234 parameter, it is possible to delay the closing control of

the fuel solenoid valve with reference to the stop control (ECU_ENABLE or STOP) of the engine: the engine is stopped through its own stopping system and, when the engine is stopped, the fuel solenoid valve can be closed.

10.5.5.6 Command for the starter (START)

This control should be used for the direct control of the starter motor. The board enables the START output to start the engine, and shall remove it immediately when it detects a "started engine" status (see 10.5.4). In this way, it ensures the immediate release of the starter motor ring gear, therefore avoiding that the starter motor is dragged by the engine. In case of failure to start, the board deactivates the START output at the end of the starting attempt.

The duration of each starting attempt is automatically determined by P.0210 parameter ("Duration of the starting control"). This duration may be increased for gas engines (see below). The starting cycles in MAN controlled by the START key last exactly as long as the key is pressed.

10.5.5.7 Gas solenoid valve control (GAS)

This control only makes sense for GAS engines. The aim is to perform the washing cycle of the engine. When a GAS engine is turned off, in the feeding circuit unburned gas is still present. If it is not disposed of before the next starting, it could be dangerous because it could explode unrestrainedly. Therefore, each time the engine is started, the washing cycle to remove this unburned gas is performed. The cycle consists in making the engine run, through the starting motor, without opening the GAS valve: the vacuum caused by the engine is enough to remove the unburned gas.

This function is enabled by configuring an output for the gas valve control (DOF.0014) and by setting P.0209 parameter to a value higher than zero.

The gas solenoid valve is opened after P.0209 seconds after the activation of the starter has been controlled (START): for this reason, if the duration of the stating cycle (P.0210) is lower than P.0209 parameter, the duration of the washing cycle is reduced to a second less than the time configured in P.0210 (with a minimum of 200 ms).

If the starting attempt ends without that the engine has started, the board closes the GAS valve and, at the next starting attempt, the washing cycle will be repeated.

P.0209 parameter is shared with the washing cycle for gas engines. If an output of the board is configured for the **GAS** control, the preheating cycle of glow plugs will not run.

10.5.5.8 Engine stop command when energized (STOP)

This control is used in systems where it is preferred to give priority to the supply by the generator. When the FUEL control is used, as a matter of fact, a failure of the solenoid valve control system results in its closure, and the resultant stop of engine as a consequence.

The STOP control is instead active only during the stopping cycle. Its purpose is to block the flow of fuel to the engine only during the stopping phase: when the engine has been stopped, the output is disabled, so allowing the reopening of the fuel pipeline. In this case, it is always possible to start the engine, even at the presence of a fault on the STOP control: at the limit it will not be possible to stop the engine.

The STOP control is activated at the beginning of the stopping cycle, at the same time when the ECU_ENABLE control is removed. The STOP control will remain active for the time set with P.0213 parameter ("Duration of the stop control").

Note: If the engine stops in a shorter time, and a restarting of the engine is required, the STOP control is disabled before.

10.5.5.9 Idle speed command (IDLE)

This control is used to activate the reduced rotation speed, directly on the rpm regulator of the engine.

The output is active during the entire IDLE cycle. If there is a request for IDLE before starting the engine, the control will be already active from the beginning of the starting sequence. Similarly, if the IDLE request is active during the stopping cycle, the control is active as well.

The IDLE cycle can be requested in two ways:

- By setting a nonzero delay in P.0233 parameter ("Low speed cycle duration"). The board performs an IDLE cycle at each stating of the engine (both manual and automatic). The maximum duration of the IDLE cycle is the one set with P.0233 parameter. It is however possible to link the duration of the cycle to the temperature of the coolant. By setting a nonzero value in P.0223 parameter ("Minimum temperature for the consent to supply"), the board monitors the temperature of the coolant and, as soon as it is above P.0223 threshold, it stops the IDLE cycle.

- With a digital input configured with DIF.0035 function ("Request for reduced speed"). When the input is active, the board runs the IDLE cycle.

During the IDLE cycle, minimum frequency and minimum voltage protections of the generator are disabled. At the end of the IDLE cycle, before enabling the protections, the board requires that voltages and frequency are within tolerance: if it is not the case, the board activates A008 shutdown ("no steady status").

During the IDLE cycle the board does not allow the closing of GCB switch. If the IDLE cycle is requested (with the digital input) while GCB is closed, the board opens GCB switch first (in case by discharging power if the generator is parallel to anything – HT GC5xx), and then activates the IDLE control.

10.5.6 Manual control sequence

10.5.6.1 Manual start

With the board in MAN, it is possible to request the starting of the engine with the START key of the panel. The sequence is entirely entrusted to the operator, who should hold the START key until the starting of the engine. If the engine starts, the board will automatically remove the control of the starter motor.

If the operator releases the START key when the engine has not been started yet, the board leaves the fuel (FUEL and also GAS) circuit open for 10 seconds (to verify if the engine starts): then, in case, it starts an automatic stop cycle.

During the manual start, the board will automatically perform glow plugs pre-heating and cleaning cycles. The starting is always performed with battery #1 (if two batteries are configured).

Note: if the starting is requested in MAN when the engine is already running (but it was not started by the board), HT GCxxx acknowledges the situation: it activates all engine controls as if it had started it, except for the starter motor, that is not activated.

10.5.6.2 Manual stop

With the board in MAN, it is possible to request the stopping of the engine in follow ways:

- With the STOP key on the board panel of the card.

- With a command from serial port. Write a value "3" in the HOLDING REGISTER 20 Modbus register.

- With an “SMS” control (see document [8]).

In all cases, HT GCxxx performs an emergency automatic stop cycle.

Note: the manual stop cycle can also be performed with already stopped engine.

10.5.7 Automatic command sequence

Before describing automatic start/stop procedures, it is necessary to define when the engine should be started and stopped automatically.

The engine is started automatically if there are no shutdowns, discharges and deactivations and if at least one of these conditions is present:

- If the TEST is activated (see 10.1).
- If the REMOTE START is activated (see 10.1).
- If there is no active "inhibition to intervention" of the generator (see 10.6) and the automatic intervention of the generator is required. This request depends on the type of system (see document [4]; for HT GC3XX boards, consider the type of SSB system):
    - Stand-alone production systems. The request for intervention is always active.
    - Emergency system to the mains. HT GC3XX boards are always and only included in this category. The request for intervention is active if the mains is out of tolerance or if MCB switch is not closed (if configured).
    - System for the production in parallel with the mains only. The request for intervention is active when the mains is present and if voltage and frequency measures authorize the parallel.

In automatic mode, the engine can be stopped in two ways:

- With normal procedure. After opening the GCB switch (for HT GC5xx possibly after discharging power), the board performs a cooling cycle of the engine (only if previously the load was connected to the generator), by keeping it running without load. This procedure applies if:
    - No automatic startup request is pending (see above)
    - Automatic intervention of the generator inhibited.
    - An anomaly, qualified as “deactivation” or “discharge” occurred (it is an anomaly typically dangerous for loads but not for the engine).
- With an emergency procedure. This procedure requires immediate engine stop, without engine cooling cycle. It applies if:
    - By putting the controller in OFF/RESET mode.
    - Any anomaly described as a "shutdown" is activated. In automatic mode, the stop commands from panel (STOP button), from serial port and from SMS are included in this category since they activate the alarm A07 (manual stop in auto mode).

10.5.7.1 Automatic startup

The board automatically executes the number of starting attempts configured with P.0211 parameter ("Number of starting attempts") for each battery set. At the end, if the engine is not started, it activates A022 shutdown - "Failure to start".

Each starting attempt has the maximum duration configured with P.0210 parameter ("Duration of the starting control"). It however ends if the condition of started engine is detected. Within the starting procedure, HT GCxxx automatically manages pre-lubrication, glow plugs pre-heating and cleaning cycles.

Between a starting attempt and the next one, the board makes a pause with a duration configured with P.0212 parameter ("Delay between two starts"). This pause may be longer when the selected battery set is changed.

If, during a starting attempt, the board recognizes the started engine condition, it waits for the maximum time configured with P.0217 parameter ("Maximum time for steady statuses") until voltages and frequency of the generator are within tolerance:

- If during the pause the engine stops, the board will goes on with the next starting attempts.
- If generator voltages and frequency are "within tolerance", the starting procedure is ended: from this time on, also minimum voltage and minimum frequency protections are active.
- If, at the end of the pause, voltages or frequency are not "within tolerance", the board activates A008 shutdown "no steady status".

If the low speed cycle is required, the previous pause will be performed after it is finished.

At the end of the automatic starting procedure, the board manages a further delay that allows the generator to stabilize/warm up before being connected to the load. This delay can be configured with P.0218 parameter ("delay before delivery"): does not act in MAN.

10.5.7.2 Standard automatic stop

This procedure starts after the board has opened GCB switch (or at least after the board has made an attempt to open). For HT GC5xx: any power discharge of the generator has already been done.

If during the automatic operations the board closed GCB switch, it considers that the generator was heated by the load, and that it therefore needs to cool down before being stopped. Then a cooling cycle is performed. It is simply consists in keeping the engine started without load for the time set with P.0215 parameter ("Duration of the cooling cycle").

Only HT GC5xx.

Often the generators have a whole range of auxiliary services (pumps, fans and so on) that are essential for the proper functioning of the generator. These auxiliary services are normally powered from an AC voltage: if this voltage is not available, the generator cannot stay in motion. It often happens that, for example in generators that only produce in parallel with the mains, these services are powered by mains voltage, and therefore the generator should be stopped as soon as the mains fails.

HT GC5xx allows configuring the source from which these services are supplied, via P.0240 parameter ("The engine services are supplied by:"):

- 0: generator voltage.
- 1: voltage on the parallel bars.
- 2: voltage on users.
- 3: mains voltage.

If HT GC5xx realizes that there is no voltage on the selected source, the cooling cycle is stopped immediately (this function works only on the cooling cycle, not in all the other management phases of the engine). By setting P.0240 to "0", the board can always run the cooling cycle.

10.5.7.3 Automatic emergency stop

The emergency stop procedure consists in stopping the engine without performing the cooling cycle. This procedure is common also in the standard stop, after the cooling cycle.

During the stopping cycle, the board removes ECU_ENABLE and FUEL controls (the second with P.0234 seconds of delay), and activates the STOP control for P.0213 seconds. The board waits until the engine stops. The maximum duration of the shutdown cycle is configurable with P.0214 parameter ("Duration of the stopping cycle"): if at the end of this phase the engine has not stopped, A021 shutdown is activated - "Failure to stop".

Normally the stopping cycle lasts P.0214 seconds even if the engine stops in a shorter time. If during the stopping cycle a new automatic intervention of the generator is required, the same stopping cycle will be arrested only when the engine is completely stopped. In this case HT GCxxx ensures that the STOP and FUEL controls do not overlap.

10.5.8 Masking of protections on oil pressure

HT GCxxx provides a parameter that allows configuring a delay (from the moment when the "started engine" condition is recognized) within which the oil pressure protections are disabled. This is to allow time for the pump to pressurize oil and prevent false alarms. The delay is configurable with P.0216 parameter ("Engine protection masking time").

10.5.9 Events

The board records the following events if the status of the engine varies (if P.0441 >= 3):

- EVT.1040: if the motor is idle.
- EVT.1041: starting cycle in progress.
- EVT.1042: the engine is running.
- EVT.1043: cooling cycle in progress.
- EVT.1044: stopping cycle in progress.
- EVT.1045: low speed cycle in progress.

The board moreover records the following events at the changing of start/stop requests (if P.0441 = 99):

- EVT.1050: manual start request.
- EVT.1050: manual arrest command.
- EVT.1052: starting automatic request.
- EVT.1053: stopping automatic request.
- EVT.1054: starting automatic request (from contact).
- EVT.1056: starting automatic request (from serial port).
- EVT.1057: stopping automatic request (from serial port).
- EVT.1058: starting automatic request (from clock/calendar).
- EVT.1060: starting automatic request (from SMS).
- EVT.1061: stopping automatic request (from SMS).
- EVT.1062: starting automatic request (for non-closed MCB).
- EVT.1063: **Only HT GC5xx**, starting automatic request (from MC100 board).

10.5.10 Signallings

The following functions for the configuration of the digital inputs are linked to engine management (besides those described for engine direct controls):

- DOF.0008: the output will be activated if the engine is in motion.
- DOF.0022 (Bit mapping). There are the bits that indicate:
    - Engine running.
    - Starting cycle ongoing.
    - Cooling cycle ongoing.
    - Stopping cycle ongoing.
- DOF.0103 (Logics AND/OR)
    - ST.032: the output will be activated if the engine is in motion.
    - ST.033: the output will be activated if the engine is in motion and if the “oil protection masking” time span has elapsed (P.0216).
    - ST.035: engine stopped.
    - ST.036: starting cycle ongoing.
    - ST.037: low speed cycle ongoing.
    - ST.038: delay before supplying ongoing.
    - ST.039: engine: ready for power delivery.
    - ST.040: cooling cycle ongoing.
    - ST.041: stopping cycle ongoing.

The following functions, for the configuration of analogue outputs, are linked to engine management. The outputs are managed on the basis of an engine analogue value. Use the "conversion curves" to adapt the single value to the output (0-100%):

- AOF.3001 (“engine speed”).
- AOF.3011 (“oil pressure”).
- AOF.3013 (“oil temperature”).
- AOF.3015 (“oil level”).
- AOF.3023 (“coolant temperature”).
- AOF.3025 (“coolant level”).
- AOF.3035 (“fuel level”).

10.5.11 Fuel pump

Gen-set implements the full management of the fuel pump, to pump fuel from the storage tank to the tank on the generator. To manage the pump, HT GCxxx has to acquire the fuel tank level on board the generator: for this purpose, a float with contacts or an analogue level sensor can be used (that can be selected through P.0401 parameter “type of sensor for fuel pump”).

10.5.11.1 Functioning mode

Three functioning modes of the fuel pump are provided:

- **MAN-OFF:** the pump is always off, even with the tank empty.
- **MAN-ON:** the pump is stopped only when the tank is full. No hysteresis band is managed: as soon as the tank is no longer full, the pump starts.
- **AUTO:** the controller starts/stops the pump depending on the level of the fuel in the tank on board the machine, with a hysteresis band that prevents continuous starts/arrests.

The functioning mode can be selected in this ways:

- Through the digital inputs configured through the functions:
  - DIF.2241: forces the pump in MANUAL-OFF mode.
  - DIF.2242: forces the pump in MANUAL-ON mode.
  - DIF.2243: forces the pump in AUTOMATIC mode.

  If at least one of these inputs is active, the pump functioning mode is forced and cannot be changed with the other methods described below. In case more than one input is active simultaneously, higher priority is assigned to MANUAL-OFF, followed by MANUAL-ON and then AUTOMATIC.
- By changing P.0400 parameter (“fuel pump mode”).
- “S.07” page of HT GCxxx display is dedicated to the fuel pump. From this page it is possible to change the pump functioning mode:
  - Use the ENTER button.
  - Use ▲ e ▼ keys to select the required mode.
  - Press ENTER to confirm or EXIT to abort.

  If no keys are pressed for 60 seconds, the modification procedure is automatically terminated.
- With a command from serial port. It is necessary to write Modbus HOLDING REGISTER 20:
  - By writing the value “13”, the functioning mode turns into MANUAL-OFF.
  - By writing the value “14”, the functioning mode turns into MANUAL-ON.
  - By writing the value “15”, the functioning mode turns into AUTOMATIC .

10.5.11.2 Use with an analog level transducer

To use this function:

- The level analogue transducer should be connected:
  - To the dedicated JM-2 analogue input: P.0114 set to "1" or "20".
  - To generic analogue inputs (JW or JWB connectors, or DIVIT expansion module inputs). In this case, use AIF.1221 function for the configuration of the input (P.4001 parameters for input 1).
- Configure the board to control the pump in accordance with the transducer (P.0401 =0).
- Set the thresholds to activate/deactivate the pump (parameters P.0402 and P.0403).
- In case they are configured, also minimum, low and high fuel level are used (P.0347, P.0345, P.0343 parameters): they are used even if the relevant intervention times are set to zero (to disable anomalies).

Very important is the thresholds setting which should be ranked by level (from down up), as follows: minimum, low, start, stop, high. As already explained, the controller operates even if thresholds are not in this order; all you need is the first three ones lower than the last two ones (within each of the two groups they can be swapped, but it is not recommended).

10.5.11.3 To use this function requires:

Configure the board to control the pump in accordance with the transducer (P.0401 =1).

To use this function, it is necessary to connect the contacts of the transductor to the analogue inputs of the board, by using the functions:

- DIF.0008 (“Fuel minimum level”): input activated if the level is under minimum level threshold.
- DIF.0009 (“Fuel low level"): input activated if the level is under low level threshold.
- DIF.0010 (“Level for the fuel pump starting”): input activated if the level is under pump starting threshold.
- DIF.0011 (“Level for the fuel pump stop”): input activated if the level is **under** pump stopping threshold.
- DIF.0012 (“Hight fuel level”): Input active if the level is **above** high level threshold.

The inputs configured through DIF.0010 and DIF.0011 functions are mandatory, the other three are optional. If they are present, they will be used even if the delay for the relevant input has been set to “0” to disable the anomaly.

10.5.11.4 Level evaluation

The controller assigns the actual fuel level by calculating in the order all the following evaluations:

- If the level is lower than the pump start threshold, the controller assigns the “start” position.
- If a low level threshold exists, and the level is lower than threshold, the controller assigns the “low” position.
- If a minimum level threshold exists, and the level is lower than the threshold, the controller assigns the “minimum” position.
- If the level is higher than the stop threshold, the controller assigns the “stop” position.

- If a maximum level threshold exists, and the level is higher than the threshold, the controller assigns the “maximum” position.
- If none of the previous condition is met, the controller assigns the “hysteresis” position.

10.5.11.5 Pump control

HT GCxxx uses two controls to manage the fuel pump, that can be associated to any digital output (P.0581 parameter and subsequent ones) with the functions:

- DOF.0003 (“Fuel pump”).
- DOF.1034 (“Fuel pump solenoid”).

The output for the pump control is mandatory (otherwise this function is disabled).

The output for the electromagnetic valve is optional. When it is used, it is necessary to configure a delay in P.0405 parameter (“delay between solenoid valve and fuel pump”): HT GCxxx guarantees the opening of the solenoid valve P.0405 seconds **before** activating the pump, and the opening of the solenoid valve P.0405 seconds **after** closing the pump. All that to avoid that the vacuum caused by the pump within the fuel circuit could bring about some malfunctioning of the solenoid valve (it could get stuck).

HT GCxxx controls the pump on the basis of the fuel level and on the basis of the working mode:

- AUTOMATIC. Referring to the level position evaluated in the previous paragraph, the pump:
  - Activates if the level is “start”, “low” or “minimum”.
  - Deactivates if the level is ”stop” or “maximum”.
  - Retains the actual command if in “hysteresis”.
- MANUAL-ON. Pump can be activated and deactivated according to operator needs. However, the controller prevents the start if the level (see previous paragraphs) is “stop” or “maximum”.
- MANUAL-OFF. The pump is deactivated

HT GCxxx can anyway stop the pump (even if the previous logic would require its start) when the following conditions are present:

- If there are active anomalies activated by digital inputs configured with DIF.0034 function ("fuel pump early warning"). Warning: it is the anomaly that stops the pump, not the activation of the input. Normally, this input is used to acquire the minimum level of the storage tank. In this case, configure a message for the input (P.0509 for input 1): it will be displayed as description of the early warning (like "EMPTY TANK").
- Moreover, you can set the maximum fuel pump activation time with parameter P.0404. This parameter should be used to set the time needed for the pump to fill the equipment tank, in the worst conditions: empty tank and engine started at maximum power. If the pump stays in motion (both from manual and automatic control) for a longer time span, the board activates W064 early warning: in fact, it is likely the presence of a failure of the pump or, anyway, that the pump is not drawing from the storage tank. The pump is stopped until W064 early warning is activated: when the operator “cancels” it, the pump restarts with another cycle.
- HT GCxxx allows configuring the electric source that has to supply the pump, through P.0406 parameter (“Supplying of the fuel pump”):
  - 0: generator voltage.

- 1: voltage on the parallel bars.
- 2: voltage on users.
- 3: mains voltage.
- 4: from an always present voltage.

If HT GCxxx detects that there isn't voltage on the selected source uninterruptedly for five seconds, it will stop the pump (set P.0406 on “4” to disable this control).

- The pump is disabled in OFF/RESET, but only if this mode persists consecutively for five seconds.

10.5.11.6 Events

The board will record the following events, if the fuel pump status changes (if enabled with P.0441 = 99):

- EVT.1070: the pump is started.
- EVT.1071: the pump is stopped.

10.5.12 Maintenance

The board can automatically communicate to the operator the request to carry out engine periodic maintenance. This function is configurable with parameters P.0424 and P.0425. With P.0424, it is possible to set extra operation hours for maintenance service. In P.0425, on the contrary, the type of anomaly to be activated at the end of the period is configured:

- 1: early warning (W039).
- 2: discharge (U039).
- 4: deactivation (D039).
- 8: shutdown (A039).

The function is enabled if the parameter P.0424 contains a value other than zero. The count starts in the moment this parameter is set. When the configured (working) hours have elapsed, the board records, on its non-volatile memory, the maintenance request. In this way, also cutting off the supply to the board, the piece of information doesn't get lost and, above all, the anomaly cannot be cancelled. If an alarm has been selected withy P.0425, then the generator cannot be used again. This function allows to manage rental contracts “by hour number”.

To cancel the maintenance request (and the relevant signal) requires setting again the parameter P.0424: to disable the function, set the parameter to zero; to set the next maintenance after the same period as the previous one, simply confirm the existing parameter; or set a new interval. To modify these parameters requires installer level password.

10.6 Inhibition to automatic intervention

If the board is in AUTO mode, whatever the status of the mains is, the automatic triggering of the generator can be prevented in several ways, which are described in the following paragraphs.

The activation of "inhibition automatic intervention" is signalled by displaying a padlock icon in the title bar on every page of the display.

NB: This function is usable only in AUTO mode, it has no effect in MAN, TEST and REMOTE START modes.

10.6.1 Inhibition from contact

The controller can use a digital input programmed for inhibiting the gen-set automatic operation (function DIF.0040 – "inhibition"). In case of an “active” input, the engine is never automatically started, not even if the plants condition require.

Use parameter P.0207 to set a delay between input's physical activation and this function's logic activation: however, the delay can only be applied to a controller in AUTO mode, otherwise the delay is nil. Use parameter P.0208 to set a delay between input's physical de-activation and this function's logic de-activation: in case the generator is already running, the delay is two seconds (firm).

The value set in the parameter that configures the delay of the used digital input (P.0508 for digital input 1) is ignored.

The board records any changes of this specific inhibition:

- EVT.1013: inhibition activated.
- EVT.1014: inhibition deactivated.

10.6.2 Inhibition from clock

By using P.0421, P.0422 and P.0423 parameters, it is possible to select the days of the week and a time bracket during which the generator is enabled to work. Outside this time bracket (and during not-selected days), the “inhibition to automatic intervention” function of the generator is active (and then the generator will be stopped).

In particular, parameter P.0421 allows to set the generator's weekly operation days. The remaining two allow to set an hour range valid for all selected days. The range start time (P.0422) refers to the days set in P.0421, while the range end time (P.0423) refers to the same day, if its value is higher than P.0422, or to the following day if lower (across midnight). Moreover, setting P.0422 and P.0423 to the same value defines a full day's range (see 12.1.2).

10.6.3 Inhibition from "power load" (HT GC5xx only)

In systems in parallel among more generators it is possible to use the "load management" (see document [4]). This function starts the generators that are strictly necessary for the power required by the loads at a given time. That is, exceeding generators are stopped even though, for example, it is an emergency plant and mains is Off. The “load management” uses the “inhibition to automatic intervention” function to stop generators.

10.6.4 Inhibition due to failure of mains (HT GC5xx only)

In systems that provide only the supplying in parallel with the mains (see [4]), should the mains fail, HT GC5xx would force the opening of GCB switch and, after a configurable waiting time (P.0899), it would activate the “inhibition to automatic intervention” to stop the generator until the mains is again "within tolerance".

10.6.5 Inhibition due to “GCB switch not open” (only HT GC5xx)

In multiple generator parallel plants, a generator's GCB switch might not open when the generator is stopped. This is an hazardous situation, as the voltage from the other running generators 'drags' the alternator of the gen-set with “not open GCB”. In this condition, notwithstanding the stop command, the engine would keep running with all external services unpowered (oil pumps and the like). In these conditions, it is possible to stop the closure of GCBs of the other generators (P.0804), and also to force their opening in case they are already closed: the generators are stopped (by means of the “inhibition to automatic intervention”) waiting until the problem is solved.

10.6.6 Signallings

The board makes the status of the single "inhibition to starting" available for the AND/OR logics, through the following internal statuses:

- ST.080: from contact.
- ST.081: from clock.
- ST.082: from load management (only HT GC5xx).
- ST.083: due to failure of mains (HT GC5xx only).
- ST.084: inhibition due to “GCB switch not open” (only HT GC5xx)

10.7 Inhibition to taking of load

In automatic mode, once the generator has been started, HT GCxxx normally always tries to close GCB switch. In these conditions, it is possible to force the opening of GCB switch by using the “inhibition to power load” function.

This internal function intervenes in all automatic modes (AUTO, TEST and REMOTE START). The activation of this function does not require the activation of anomalies.

If the "inhibition to power load" is activated when GCB is already closed, the board tries to open it, by carrying out generator power discharge first (only HT GC5xx if possible)

It is possible to activate this function in different ways, described in the following paragraphs.

The board records an event when the "inhibition to power load" is activated and deactivated (for any reason):

- EVT.1080: inhibition activated.
- EVT.1081: inhibition deactivated.

10.7.1 Inhibition from contact

It is possible to configure a digital input through DIF.0030 function (“inhibition to power load”). When this input is active, the inhibition to power load is active.

10.7.2 Control from serial ports

By writing the value "20" in the HOLDING REGISTER 20 Modbus register, inhibition to power load is activated, by writing the value "21" it is disabled. This control remains active for 30 seconds from the time it is received by HT GCxxx: it is therefore necessary to repeat it about every 25 seconds until the inhibition to power load should be kept active.

10.7.3 Due to failure of mains (HT GC5xx only)

In systems that provide the supply in parallel with the mains only (see [4]), if the mains fails, HT GC5xx will force the immediate opening of GCB switch, and will activate the “inhibition to power load” in order to stop its closure. The inhibition will be cancelled when the mains is "within tolerance" again.

10.7.4 Inhibition due to “GCB switch not open” (only HT GC5xx)

In multiple generator parallel plants, a generator's GCB switch might not open when the generator is stopped. This is an hazardous situation, as the voltage from the other running generators 'drags' the alternator of the gen-set with “not open GCB”. In this condition, notwithstanding the stop command, the engine would keep running with all external services unpowered (oil pumps and the like). In these conditions it is possible to stop the closure of the GCBs of the other generators (P.0804), and also to force their opening in case they are already closed: the board activates the “inhibition to power load” to stop the closure (or force the opening) of GCB.

10.7.5 Inhibition from MC100 board (HT GC5xx only)

If HT GC5xx is “controlled” by MC100 (see document [4]), MC100 can activate the “inhibition to power load” to force the opening of GCB switches of all generators.

10.7.6 Inhibition to synchronization on MCB ongoing (only HT GC5xx)

In a system composed of more than one generator, that can supply both stand alone and in parallel with the mains (MSB + MSTP or MPtM + MSB), some external logics (among which MC100) can intervene on supplying generators voltage and frequency in order to synchronize the generator bar to the mains in order to close MCB switch. At this stage, HT GC5xx activates

the inhibition to power load if its own GCB is open: in this way it stops its closure, in order not to disturb the ongoing synchronization.

10.7.7 Signallings

The board makes statuses of the single "inhibition to power load" available, for AND/OR logics, through the following internal statuses:

- ST.088: from contact.
- ST.089: due to failure of mains (HT GC5xx only).
- ST.090: for controls from the serial port.
- ST.091: inhibition due to “GCB switch not open” (only HT GC5xx)
- ST.092: inhibition to synchronization on MCB ongoing (only HT GC5xx)
- ST.093: for control from MC100 board (only HT GC5xx)

10.8 Breakers management

HT GC3XX.

It is always able to control GCB and MCB switches: it is not provided for that the switches can be controlled by external devices. MGCB switch is not provided for, and thus not managed.

HT GC5xx.

It is always able to control GCB switch (and does not provide for that the switch can be controlled by external devices). It manages MCB switch, but is able to control it only for systems which consist of a single generator (P.0802 <= 4). It accepts, however, that MCB switch is controlled by external logics.

Through the P.0854 parameter it is possible to configure the way HT GC5xx has to manage the GCB switch:

- 0: HT GC5xx cannot use synchronization to close GCB.
- 1: HT GC5xx can use synchronization to close GCB.

At the same way, through P.0855 parameter, it is possible to configure the way HT GC5xx has to manage MCB switch.

- 0: HT GC5xx controls MCB, and cannot use synchronization to close it.
- 1: HT GC5xx controls MCB, and can use synchronization to close it.
- 2: MCB is controlled by external devices.

HT GC5xx is not able to control any MGCB switch, but manages it in case of systems which consist of more generators.

10.8.1 Digital outputs for the management of the switches

Four different commands can be used to manage MCB breakers:

- DOF.0029 - “MCB (NC) Under voltage coil”. **Only HT GC5xx** This feature can be used to supply with power the under voltage coil (if any) of the breaker. The board activates this output when it wants to open the switch, it deactivates the output when it wants to close the switch: the actual closing control will be activated with at least 0.5-second delay from the deactivation of this output. A usually closed contact should be used, so that with non- supplied board, the undervoltage coil is excited and MCB switch can close.
- DOF.2002 - “MCB opening coil”. **Only HT GC5xx** The controller enables this output when it must open the breaker: the output goes back on standby once the breaker feedback shows that it is open (or when the opening time-out expires).
- DOF.2003 - “MCB closing coil”. **Only HT GC5xx** The board activates this input when it wants to close the switch (by assuring that DOF.0029 function, if any, isn't active for at least 0.5 seconds): the output is again at rest as soon as the switch feedback indicates that it is closed (or when the closure time-out lapses, or if the synchronism condition is no more present).
- DOF.0035 - “MCB steady opening command”. The board activates this output when it wants to open the switch: the output remains active also with open switch. The board deactivates this output when it wants to close the switch (by assuring that the possible DOF.0029 function isn't active for, at least, 0.5 seconds): the output remains deactivated with closed switch, too. Therefore, in order for the MCB breaker to close with the controller unpowered, the **normally closed** contact must be used. Use this output with the remote control switches, not with the motorized breakers.

Four different commands can be used to manage GCB breakers:

- DOF.0030 - “GCB Under voltage coil”. **Only HT GC5xx** This feature can be used to supply with power the under voltage coil (if any) of the breaker. The controller disables this output when it must open the breaker, and enables it when it must close the breaker: the real closing command will be activated with at least 0.5 seconds after the enabling of this output. A usually open contact should be used, so that with non-supplied board the undervoltage coil is de-energized and GCB switch opens.
- DOF.2032 - “GCB opening coil”. **Only HT GC5xx** The controller enables this output when it must open the breaker: the output goes back on standby once the breaker feedback shows that it is open (or when the opening time-out expires).
- DOF.2033 - “GCB closing coil”. **Only HT GC5xx** The controller enables this output when it must close the breaker (ensuring that the feature DOF.0030 «if available» has been active for at least 0.5 seconds): the output goes back on standby once the breaker shows that it is closed (or when the closing time-out expires, or if the synchronism condition is no longer met).
- DOF.2034 - “GCB steady closing command”. **Only HT GC5xx** The controller enables this output when it must close the breaker (ensuring that the DOF.0030 feature «if available» has been active for at least 0.5 seconds): the output stays active even with the breaker closed. The controller disables this output when it must open the breaker: the output remains enabled even with the breaker open. Use this output with the remote control switches, not with the motorized breakers. A usually open contact should be used, so that with non-supplied board GCB switch opens.

The board has an internal relay dedicated to "Steady GCB closing control" (DOF.2034, terminals JG-1...3). The function of this output is not configurable. On **HT GC5xx**, however, it is possible to configure other outputs with DOF.2034 function.

10.8.2 Digital inputs for the management of the switches

The digital inputs of the board can be used for various purposes, within the scope of the management of the switches.

10.8.2.1 Acquiring breakers status

Three functions are available to get the feedback of the switch:

- DIF.0007 - "GCB switch status". Utilize this function to get the feedback of the GCB switch (active input when the switch is closed).
- DIF.0006 - “MCB switch status”. Utilize this function to get the feedback of the MCB switch (active input when the switch is closed).
- DIF.0036 - “MGCB switch status”. **Only HT GC5xx.** Utilize this function to get the feedback of the MGCB switch (active input when the switch is closed).

It is not always necessary to connect the feedbacks of switches to the board: it depends on the type of system (see document [4]; for HT GC3XX consider SSB system). If HT GCxxx gets feedbacks, it will use them to:

- Issuing failed opening or failed closing warnings (MCB and GCB).
- For its own operating sequence.
- It is also used to detect the status of the circuit breaker when it is commanded by external devices (only HT GC5xx).
- To show the status of the circuit breakers on the front panel LEDs.

The delay associated with the input that acquires the feedback is used as maximum time for the opening or closing of the switch (MCB and GCB).

10.8.2.2 Switches manual controls

It is possible to connect some external keys to open/close the switches to the digital inputs of the board. HT GCxxx will use these inputs (only in MAN and in TEST) exactly in the same way as the GCB and MCB (if present) keys present on the panel.

- DIF.0054 - “GCB close command”.
- DIF.0055 - “GCB open command”.
- DIF.0071 - “MCB close command”. **Only HT GC5xx.**
- DIF.0072 - “MCBopen command”. **Only HT GC5xx.**

Please refer to the paragraph 10.8.3.2 for a description of the use of these controls.

10.8.2.3 Request for synchronization (HT GC5xx only)

If MCB is not controlled by HT GCxxx, it is anyway possible to use HT GCxxx synchronization function. When the external logic wants to close MCB switch and synchronization is required, it should require synchronization to HT GCxxx by activating a digital input (DIF.0052 - "Synchronization request for MCB"). For more details refer to the document [4].

10.8.3 Management logic

It is always possible to open GCB switch. It may instead be closed only if:

- The board is not in OFF/RESET.
- The engine has been started by the board.
- Generator voltages and frequency are "within tolerance".
- There are no shutdowns, deactivations and discharges.
- In AUTO: to control the closing of GCB, P.0218 time should be elapsed from the starting of the generator, or better, since the electrical features of the generator are within into tolerance bracket.

It is always possible to close MCB switch (if controlled by HT GCxxx). It may instead be opened only if:

- The board is not in OFF/RESET.

10.8.3.1 OFF/RESET management logic

In this mode, HT GCxxx always controls GCB when opening. If MCB is controlled by HT GCxxx (therefore always for HT GC3XX boards), it is always controlled to closing.

10.8.3.2 Management logic in MAN and in TEST

The document [4] details logics through which **HT GC5xx** allows opening/closing the switches manually (anyway the logics depend on the type of system). For **HT GC3XX**, refer to the same document, considering "SSB" as type of system.

As follows there is a description of the possible ways to send opening/closing manual controls of the switches to the board.

- By using the board keys with "type 1" keyboard:

  HT GC3XX.

Normally one of the two switches is always closed. Pressing GCB key alone, the operator requires the switching of users between mains and generator. Pressing SHIFT + GCB keys, the operator requires the opening of both switches.

When both switches are open:

- Pressing GCB key, the board closes GCB switch.
- Pressing SHIFT + GCB keys, the board closes MCB switch.

HT GC5xx.

Pressing GCB key alone, the operator acts only on GCB switch: s/he opens it if it was closed, closes it if it was open (MCB maintains its status). HT GC5xx, if it can, uses synchronization to close GCB: if it is not possible to use it, it opens MCB before closing GCB.

Pressing SHIFT + GCB keys, the operator acts only on MCB switch: s/he opens it if it was closed, closes it if it was open (GCB maintains its status). HT GC5xx, if it can, uses synchronization to close MCB: if it is not possible to use it, it opens GCB before closing MCB.

- By using the board keys with "type 2" keyboard:

  By pressing GCB key, the operator acts only on GCB switch: s/he opens it if it was closed and closes it if it was open (MCB keeps its status). **HT GC5xx**, if it can, uses synchronization to close GCB: if it is not possible to use it, it opens MCB before closing GCB. **HT GC3XX** cannot use synchronization: therefore it will always open MCB before closing GCB.

  By pressing MCB key, the operator acts only on MCB switch: s/he opens it if it was closed and closes it if it was open (GCB keeps its status). **HT GC5xx**, if it can, uses synchronization to close MCB: if it is not possible to use it, it opens GCB before closing MCB. **HT GC3XX** cannot use synchronization: therefore it will always open GCB before closing MCB.

- Using the digital inputs of the controller (to connect external buttons to allow for manual opening/closing of the breakers) See paragraph 10.8.2.2 for the list of available functions.

  These commands act on shifting the input from “not active” to “active”, not on the steady “active” state. For each switch, it is possible to utilize both open/close controls, or only the close one. If only the closing command is used, it acts as “toggle”: it commands the breaker opening if it is closed, or its closing if it is open. The same as described for MCB and GCB keys in the previous paragraph for the keyboard "type 2" is valid.

- Using the commands received from the serial ports. Only in TEST mode it is possible to use the Modbus HOLDING REGISTER 20: by writing the value “4”, HT GCxxx opens MCB and closes GCB. By writing the value “5”, the board opens GCB and closes MCB”

For a detailed sequence relevant to any single type of system, please refer to the document [4].

WARNING! (only HT GC5xx): P.0235 parameter determines what happens on GCB switch when the functioning mode turns from automatic mode (AUTO, TEST or REMOTE START) to MAN:

- P.0235=0: GCB holds its status.
- P.0235=1: GCB is opened immediately and without performing power discharge.

10.8.3.3 Management logic in AUTO mode

The document [4] details the logics by means **HT GC5xx** manages the switches in AUTO, TEST and REMOTE START (anyway logics depend on the kind of system). For **HT GC3XX**, refer to the same document, considering the "SSB" as type of system.

10.8.4 Change-over switch.

Only for the SSB type of system (single generator in emergency to mains for HT GC5xx and always for HT GC3XX), the board can control a commutator instead of a switch. To do this, it is enough not configure any output for MCB control (DOF.0035 function): for **HT GC5xx**, it is also necessary to configure the switch as "internally controlled" with P.0855 parameter. Use the "Steady GCB closing control" (DOF.2034) to control the switch (preset and non-modifiable function on the relay to terminals JG-1...3).

It is possible to configure a minimum time span before which it isn't possible (either manually or automatically) to reverse the commutator control (P.0220 “Contactors control holding time”). This is useful because if the command is inverted during the movement phase, with some type of power switches it is possible that they lock themselves, and a manual action will be required to unlock them.

10.8.5 Commutation management

In the event that HT GCxxx controls both MCB and GCB switches, but it cannot use synchronization to close a switch (for any reason for HT GC5xx and always for HT GC3XX controls), it can always use commutation: open the other switch and then close the needed switch. In this case, it is possible to configure the duration of the pause with both switches open, by means of P.0219 parameter (“contactors controls exchange time”).

10.8.6 Signallings

The board makes controls and status of the switches available, for AND/OR logics, through the following internal statuses:

- ST.064 - "GCB status"
- ST.065 - "MCB status"
- ST.066 - "MGCB status" (**only HT GC5xx**)
- ST.068 - “GCB steady closing command”.
- ST.069 - “MCB steady closing command”.

10.8.7 Events

The board keeps track of every change in the control and of the status of the switches in the records, if P.0441 >= 2:

- EVT.1030: GCB close command
- EVT.1031: GCB open command
- EVT.1032: GCB closed.
- EVT.1033: GCB open.
- EVT.1035: MCB close command
- EVT.1036: MCB open command
- EVT.1037: MCB closed
- EVT.1038: MCB open.

11. Anomalies

This chapter describes all the anomalies managed by the controller. Some of these act as protections for the loads, for the generator or for the engine. There is also signaling of specific events in the plant management. Before describing them in detail, some definitions are required.

Four types of anomalies are:

- **Warnings**: these anomalies do not require shutting the engine down. They point out to situations that are not dangerous at the moment, but the operator must take some action because, if ignored, they could degenerate in one of the following categories.
- **Discharges (only HT GC5xx):** these anomalies has features similar to deactivations (see below). As they do not create problems for the loads and the gen-set, in parallel operations opening of the power connection is preferably performed after power unloading. This is performed by fast unloading ramp. However, it is not possible to restart the engine until the anomaly has not been acknowledged.
- **Deactivations**: these anomalies require shutting the engine down. They create hazards for the loads but not immediately for the engine. For this reason, the controller opens immediately the GCB breaker (without discharging the power from the generator), then it stops the engine with standard procedure, i.e. with the cooling cycle. However, it is not possible to restart the engine until the anomaly has not been acknowledged.
- **Alarms**: these anomalies require shutting the engine down. They create hazards for the loads and/or for the engine and the generator. For this reason, the controller opens immediately the GCB breaker (without discharging the power from the generator), and stops the engine immediately with standard procedure, i.e. without the cooling cycle. It is not possible to restart the engine until the anomaly is acknowledged.

An alarm can be activated only if no other alarms are already active (there are some exceptions to this rule and will be underlined in the rest of the paragraph). Discharges, deactivations and early warnings can be present.

A deactivation can be activated only if no alarms and deactivations are already active. Whereas, other early warnings or discharges can be present.

For the activation of a discharge, no shutdowns, discharges or disconnections should be present. Some other warnings can be active.

For the activation of an early warning, no discharges, disconnections or shutdowns should be present. Some other warnings can be active.

When an anomaly activates, the controller performs the following:

- It activates the internal horn and, if configured, also the external one.
- Prompts the page S.02 on the multifunction display. This page shows the numeric code and the current language text related to all active anomalies. The numeric code flashes to indicate that the anomaly hasn't been recognized by the operator yet.
- It activates the "ALARM/WARNING" flashing light indicator if the anomaly belongs to the early warning category, or the light is steady if the anomaly belongs to discharge, disconnection or shutdown categories.
- If the anomaly is not an early warning, it disconnects the generator from the users or the parallel bars (HT GC5xx only under certain conditions discharges the power from generator first) and stops the engine (with or without cooling cycle).

The following operations can be carried out on an anomaly:

- **Silence** the horn.
- **Acknowledge it**: this informs the controller that the operator has acknowledged the event.
- **Reset**: this informs the controller that the anomaly is no longer active.

The multifunction display shows the anomaly until the operator “acknowledges” it, even if the relevant cause is no longer present (sequence ISA2C). Early warning anomalies are automatically cancelled by the board (after having been recognized) when the causes that originated them are no longer present.

11.1 Silence the horn.

It is possible to silence the buzzer by pressing ACK/ENTER key on the board panel. **With this operation, the anomaly is not recognized and therefore it continues to flash on the display.**

The management of the hooter is anyway linked to the value of P.0491 parameter (“duration of hooter control”):

- If set to zero, the horn will be never activated.
- If the hooter is set on 999, it will be activated when a new anomaly arises and deactivated through the above-described procedure (never automatically).
- If the hooter is set on a value between 1 and 998, it will be activated when a new anomaly arises and deactivated through the described procedure above, or when the configured time span has elapsed.

11.2 Identify the anomaly

The anomaly can be identified in two ways:

- By pressing the ACK/ENTER key on the board panel. **If you push this key when the hooter is on, it stops the hooter:** it should be pressed a second time to “recognize” the anomaly.
- Using the commands from the serial ports. Write the value "2" in the HOLDING REGISTER 20 Modbus register to acknowledge anomalies. NB: this control also cancels the hooter, in case it is active.

The previous operations “identify” all active anomalies. The relevant numeric codes on the display stop flashing.

11.3 Cancel the anomaly

An anomaly can be cancelled only when the cause that activated it is no more present.

The controller automatically resets all the acknowledged warnings when their cause is no longer active.

On the contrary, to cancel discharges, deactivations and shutdowns, it is necessary to follow one of the below procedures:

- By putting the controller in OFF/RESET mode.
- Using a digital input configured with the feature DIF.0005 - “Alarm reset command”. Anomalies are cancelled when the input from "inactive" turns into "active".
- Using the commands from the serial ports. Write the value "1" in the HOLDING REGISTER 20 Modbus register to cancel anomalies.

- By using an “SMS” control (see document [8]).

⚠ **WARNING! By cancelling an anomaly that caused the engine to stop through remote controls (therefore not putting it on OFF/RESET) the board remains in the present operating mode (e.g. AUTO) and, if conditions allow it, the engine restarts immediately.**

11.4 Signallings

The following functions for the configuration of digital outputs are linked to anomalies:

- DOF.0001 (“reset of anomalies”). The board activates this output for **one** second when the internal sequence for the cancellation of anomalies is carried out. This output can be used also to cancel any anomalies managed externally by other devices.
- DOF.0021 (“exsternal horn”). This output is activated and deactivated along with the internal hooter. It can be used to control a more powerful hooter and/or a lamp.
- DOF.0017: the output will be activated if at least an early warning is active.
- DOF.0018: the output will be activated if at least an early warning, a deactivation or a discharge are active.
- DOF.0009: the output will be activated if at least an anomaly linked to the generator is active. As follows is the list of anomalies that activate this output:
  - 001 (“Minimum generator voltage”).
  - 002 (“Maximum generator voltage”).
  - 006 (“Maximum current (from measure)”).
  - 008 (“Operating conditions failure”).
  - 015 (“Maximum current (from contact)”).
  - 016 (“Short-circuit”).
  - 052 (“Generator voltages unbalance”).
  - 053 (“Current unbalance rate”).
  - 055 (“Wrong generator phases sequence”).
  - 061 (“Lost excitation”).
  - 106 (“Maximum exported reactive”).
- DOF.0010: the output will be activated if at least an anomaly linked to the engine is active. As follows is the list of anomalies that activate this output:
  - 005 (“Battery-charger failure (from D+)”).
  - 021 (“Engine not stopped”).
  - 022 (“Overcrank”).
  - 031 (“Hight coolant temperature (from contact)”).
  - 032 (“High coolant temperature (from measure)”).
  - 033 (“Maximum coolant temperature (from contact)”).
  - 034 (“Maximum coolant temperature (from measure)”).

- 037 (“Low battery voltage (from measure)").
- 038 (“High battery voltage (from measure)").
- 039 (“Needed maintenance”).
- 041 (“Minimum oil pressure (from contact)”).
- 042 (“Minimum oil pressure (from measure)”).
- 043 (“Low oil pressure (from contact)”).
- 044 (“Low oil pressure (from measure)”).
- 049 (“Maximum power”).
- 062 (“CAN-BUS 0 (engine): BUS-OFF.
- 065 (“Low coolant temperature”).
- 098 (“CAN-BUS 0 (engine): maximum time w/o data”).
- 105 (“Battery-charger failure (from CAN-BUS)”).
- 132 (“High coolant temperature (from CAN-BUS)”).
- 134 (“Maximum coolant temperature (from CAN-BUS)”).
- 135 (“Minimum coolant level (from CAN-BUS)”).
- 136 (“Low coolant level (from CAN-BUS)”).
- 137 (“Low battery voltage from CAN BUS”).
- 142 (“Minimum oil pressure (from CAN-BUS)”).
- 144 (“Low oil pressure (CAN-BUS)”).
- 158 (“High oil temperature (from CAN-BUS)”).
- 159 (“Maximum oil temperature (from CAN-BUS)”).
- 160 (“Water in fuel from CAN BUS)”).
- 198 (“Warnings - Yellow lamp (from CAN-BUS)”).
- 199 (“Alarms/Blocks - Red lamp (from CAN-BUS)”).

▪ DOF.0011: the output will be activated if at least an anomaly linked to the speed control is active. As follows is the list of anomalies that activate this output:

- 003 (“Minimum generator frequency”).
- 004 (“Maximum generator frequency”).
- 011 (“Power reverse”).
- 017 ("Maximum speed from (from contact)").
- 018 (“Maximum speed (from measure)”).
- 019 (“Maximum speed (from Hz)”).
- 104 (“Minimum speed (from measure)”).
- 118 (“Maximum speed (from CAN-BUS)”).

- DOF.0012: the output will be activated if at least an anomaly linked to the fuel is active. As follows is the list of anomalies that activate this output:
  - 025 (“Minimum fuel level (from contact)”).
  - 026 (“Minimum fuel level (from measure)”).
  - 027 (“Low fuel level (from contact)”).
  - 028 (“Low fuel level (from measure)”).
  - 029 (“High fuel level (from contact)”).
  - 030 (“High fuel level (from measure)”).
  - 064 ("Fuel pump failure")
  - Anomalies caused by the digital inputs configured with DIF.0034 function ("Fuel pump early warning").
- DOF.0013: the output will be activated if at least an anomaly linked to switches is active. As follows is the list of anomalies that activate this output:
  - 013 (“MCB not closed”).
  - 014 (“GCB not closed”).
  - 023 (“MCB not open”).
  - 024 (“GCB not open”).
- DOF.0022 (Bit mapping). There are the bits that indicate:
  - At least a early warning is active.
  - At least a discharge or deactivation is active.
  - At least a shutdown is active.
  - At least a non-recognized early warning is active.
  - At least a non-recognized discharge or deactivation is active.
  - At least a non-recognized shutdown is active.
- DOF.0103 (Logics AND/OR)
  - ST.008: the output will be activated if at least an early warning is active.
  - ST.009: the output will be activated if at least a discharge is active (only HT GC5xx).
  - ST.010: the output will be activated if at least a deactivation is active.
  - ST.011: the output will be activated if at least a shutdown is active.
  - ST.012: the output will be activated if at least a non-identified early warning is active.
  - ST.013: the output will be activated if at least a non-identified discharge is active (only HT GC5xx).
  - ST.014: the output will be activated if at least a non-identified deactivation is active.

- ST.015: the output will be activated if at least a non-identified shutdown is active.

11.5 Engine protections OVERRIDE.

WARNING! using this function may seriously damage the engine. SICES cannot, in any case, be held responsible for damages, resulting from the use of the OVERRIDE function.

This term defines capacity of HT GCxxx of temporarily disabling (in particular conditions and on specific request) a series of protections. The OVERRIDE function, when is activated, turns a set of shutdowns, deactivations and discharges into simple “early warnings”: in this way, the board indicates, anyway, the presence of problems, but doesn't reduce the supplying capacity of the generator. In some situations, in fact, supply to users is put before the preservation of the engine. You should consider, for example, hospitals: there are situations in which it is preferable to damage the engine, and supply power for the longest period of time possible, rather than safeguarding the engine, but leaving operating rooms without light.

HT GCxxx manages two different OVERRIDE requests for protections; all of them can be activated through digital inputs. Use the following functions to configure the digital inputs:

- DIF.0059 (“Engine protections override”).
- DIF.0081 (“Full protections Override”).

Each OVERRIDE function turns a specific set of shutdowns/deactivations/discharges into "early warnings". The documents [1] and [2] have a table indicating all board anomalies: the column “OVER” indicates, for each anomaly, the OVERRIDE functions it is subject. The column includes:

- Letter “F” if the anomaly is subject to total OVERRIDE.
- Letter “E” if the anomaly is subject to engine protections OVERRIDE.

Besides what indicated in the table, the OVERRIDE function also affects "generic" anomalies connected to analogue and digital inputs. The following functions for the configuration of digital inputs activate anomalies that are subject to engine protections OVERRIDE and to total OVERRIDE, too:

- DIF.0004 – “alarm (after oil delay)”.
- DIF.0042 – “de-activation (after oil delay)”.
- DIF.0043 - “unload (after oil delay)” (only HT GC5xx).

For the anomalies that are triggered by thresholds on analogue inputs, it is possible to submit the anomaly to the OVERRIDE of protections via the bit 16 of the parameter that configures the options on the threshold (P.4005 for the first threshold of analogue input 1 - see 7.8).

The controller manages a separate operating time counter when this OVERRIDE mode is active. Moreover, it records when an event is triggered and when the OVERRIDE of protections is deactivated:

- EVT.1082: OVERRIDE activated.
- EVT.1083: OVERRIDE deactivated.

S.01 page of the display shows a message when the OVERRIDE of protections is activated. From 1.13 version of the software, if engine control units communicate via CAN-BUS that the OVERRIDE of protections is active, **although it was not required by HT GCxxx**, it is also indicated on the display of the board.

11.6 Anomalies connected to digital inputs

HT GCxxx manages a significant number of digital input, by taking also the expansion modules (DITEL) that it can manage into account. Every input can be used to activate anomalies. These anomalies are divided into two kinds:

- **Specific.** They are configured with DIF.0008, DIF.0009, DIF.0012, DIF.0013, DIF.0014, DIF.0015, DIF.0016, DIF.0017, DIF.0018, DIF.0028, DIF.0051 functions. HT GCxxx knows the modes through which these anomalies should be managed, and already has some default error messages (that cannot be configured) connected to each anomaly.

- **Generic.** They are configured with DIF.0001, DIF.0002, DIF.0003, DIF.0004, DIF.0019, DIF.0021, DIF.0022, DIF.0023, DIF.0024, DIF.0031, DIF.0032, DIF.0034, DIF.0041, DIF.0042, DIF.0043, DIF.0044, DIF.0045, DIF.0046, DIF.0047, DIF.0048, DIF.0049, DIF.0073 functions. As to these anomalies, the operator should configure the message that will be shown on the display. Moreover, by using the appropriate functions, HT GCxxx will be instructed regarding the way it will have to manage the anomaly.

Specific anomalies will be described in the following paragraphs: in the description the parameters relevant to the digital input #1 of HT GCxxx (P.0507, P.0508 and P.0509) will be always referred to. The documents [1] and [2] have a tables that show the parameters to be used for every digital input of HT GCxxx and of the expansion modules.

What stated above is true also for generic anomalies. They will not be described in the following paragraphs, because they will be infinite repetitions of the same description for each input. On the contrary, they are described here, by indicating parameters for input #1 of HT GCxxx.

HT GCxxx assigns the following numerical codes to generic anomalies related to digital inputs (documents [1] and [2] contain tables showing the codes for each input):

- 067 through 080 for inputs 1...14.
- 063 for input 15.
- 066 for input 16.
- 046 for input 17.
- 047 for input 18.
- 101 through 103 for analogue inputs (JM) when used as digital.
- 727 through 742 for virtual inputs.
- 743 through 758 inputs of DITEL expansion module.

By utilizing the parameter that configures the function (P.0507 of the input 1), it is possible to select the type of anomaly (early warning, discharge, deactivation or shutdown) and also to define the conditions for the anomaly management. By setting the delay to "0" (P.0508 for input 1), the anomaly is disabled. In the list below, the functions for the configuration of digital inputs, used to manage generic anomalies, are indicated. They are grouped four by four: the four functions for each group define the type of anomaly (see documents [1] e [2] for the list of functions).

- DIF.0001, DIF.0002, DIF.0041, DIF.0003. The board will activate this anomaly if the digital input is uninterruptedly active for the configured (P.0508) time span.

- DIF.0019, DIF.0042, DIF.0043, DIF.0004. The anomaly can be activated only if the engine has been started by HT GCxxx, and if it is in motion from, at least, the time span configured in P.0216 (“engine protection masking time”). The board will activate this anomaly if the digital input is uninterruptedly active for the configured (P.0508)

time span. The anomaly is subject to the engine protections OVERRIDE and to total OVERRIDE, too (see 11.5).

- DIF.0031, DIF.0048, DIF.0049, DIF.0032. The anomaly can be activated only if GCB switch is closed. The board will activate this anomaly if the digital input is uninterruptedly active for the configured (P.0508) time span.
- DIF.0023, DIF.0046, DIF.0047, DIF.0024. The anomaly can be activated only if the fuel electromagnetic valve is open (FUEL, see 10.5.5.5). The board will activate this anomaly if the digital input is uninterruptedly active for the configured (P.0508) time span.
- DIF.0021, DIF.0044, DIF.0045, DIF.0022. The anomaly can be activated only if the GAS electromagnetic valve is open (GAS, see 10.5.5.7). The board will activate this anomaly if the digital input is uninterruptedly active for the configured (P.0508) time span.
- DIF.0034. The board will activate this anomaly if the digital input is uninterruptedly active for the configured (P.0508) time span. The anomaly activation causes the stopping of the fuel pump (see 10.5.11.5).
- DIF.0073. The board will activate this anomaly if the digital input is uninterruptedly active for the configured (P.0508) time span. The anomaly is subject to the engine protections OVERRIDE and to total OVERRIDE, too (see 11.5).

11.7 Anomalies connected to analogue inputs

HT GCxxx is able to manage a high number of analogue inputs, also considering those acquired by DIGRIN, DITHERM and DIVIT expansion modules.

For each analogue input, HT GCxxx allows setting two thresholds on the acquired measure, and each threshold can activate an anomaly. These are **generic** anomalies, since HT GCxxx doesn't know how to manage them and hasn't default warning messages. They will not be described in the following paragraphs, because they will be infinite repetitions of the same description for each analogue input. On the contrary, they are described here, by indicating parameters for input #1 of HT GCxxx.

HT GCxxx assigns numeric codes 313 through 432 to **generic** anomalies linked to analogue inputs (the documents[1] and [2] have a tables that show the code of each input).

First of all the operator should configure the error message that will be shown on the board display when the anomaly is activated. It has to use P.4002 parameter, the only one for the two thresholds. HT GCxxx will add an initial wording to the configured message:

- “High value:” if the anomaly is activated when the measure is higher than the threshold.
- “Low value:” if the anomaly is activated when the measure is lower than the threshold.

For each analogue input, there are six parameters available for the management of thresholds, three for each threshold (P.4003, P.4004 and P.4005 for the first threshold of the first analogue input; P.4006, P.4007 and P.4008 for the second threshold of the first analogue input).

Besides the threshold value (P.4003 or P.4006) and the delay to be managed (P.4004 or P.4007), the operator has to configure the operations connected to the threshold (P.4005 or P.4008). The parameter that configures the actions is managed through bits (every bit enables/disables a function connected to the threshold). A description for these parameters follows 7.8

Beware!: : by setting the delay to “0”, the anomaly **isn't disabled**.

11.8 Anomalies list

From this point on, words **enabling** and **activation** will be utilized:

- Enabling an anomaly refers to the minimum conditions required for the controller to detect the relevant cause.
- Activation of an anomaly refers to the cause after enabling.

INFORMATION: normally engine and generator protections are active if the engine has been started by the board, that is, if the fuel solenoid valve control is activated. If not, the only way to "enable" the protections is to force the controller to start the engine again (by pressing the START key in MAN), for example: the cranking motor will not be activated but the controller will act as having already performed the startup.

01 – Minimum generator voltage

Type: **Deactivation**
Related parameters: **P.0101 P.0102 P.0202 P.0301 P.0302**
To disable: **P.0302=0**
Enabled in: **MAN, AUTO, TEST, REMOTE START**

This protection is only enabled if the controller has been started by the controller (if the command for the fuel solenoid is activated) and is disabled in the engine start/stop phases. It is enabled the first time (from engine start) the generator's frequency and voltages enter the tolerance range (see generator sequence description). In MAN it is always enabled if P.0329 =1 (enabled with open GCB) or if GCB switch is closed. It is enabled if, under the conditions previously mentioned, at least one of the generator voltages is continuously below the threshold P.0301 for the time P.0302.

02 – Maximum generator voltage

Type: **Alarm**
Related parameters: **P.0101 P.0102 P.0202 P.0303 P.0304**
To disable: **P.0304=0**
Enabled in: **MAN, AUTO, TEST, REMOTE START**

This protection is only enabled if the controller has been started by the controller (if the command for the fuel solenoid is activated) and is disabled in the engine start/stop phases. It is enabled if, under the conditions previously mentioned, at least one of the generator voltages exceeds continuously the threshold P.0303 for the time P.0304.

03 – Minimum generator frequency

Type: **Deactivation**
Related parameters: **P.0105 P.0305 P.0306**
To disable: **P.0306=0**
Enabled in: **MAN, AUTO, TEST, REMOTE START**

This protection is only enabled if the controller has been started by the controller (if the command for the fuel solenoid is activated) and is disabled in the engine start/stop phases. It is enabled the first time (from engine start) the generator's frequency and voltages enter the tolerance range (see generator sequence description). In MAN it is always enabled if P.0329 =1 (enabled with open GCB) or if GCB switch is closed. It is enabled if, under the conditions previously mentioned, the generator frequency is continuously below the threshold P.0305 for the time P.0306.

04 – Maximum generator frequency

Type: **Alarm**
Related parameters: **P.0105 P.0307 P.0308**
To disable: **P.0308=0**
Enabled in: **MAN, AUTO, TEST, REMOTE START**

This protection is only enabled if the controller has been started by the controller (if the command for the fuel solenoid is activated) and is disabled in the engine start/stop phases. It is enabled if, under the conditions previously mentioned, the generator frequency exceeds continuously the threshold P.0307 for the time P.0308.

05 – Belt break (D+ battery-charger failure)

Type: **Configurable**
Related parameters: **P.0115 P.0349 P.0357**
To disable: **P.0349=0**
Enabled in: **MAN, AUTO, TEST, REMOTE START**

This protection is enabled only when the board is configured to use D + signal (P.0115 >= 2). The protection is enabled if the engine was started from the controller (if the command for fuel solenoid is activated). It is activated if voltage on the D + signal remains below a fixed internal threshold consecutively for P.0349 time. The type of anomaly can be configured through P.0357 parameter.

06 – Maximum current (51)

Type: **Configurable**
Related parameters: **P.0101 P.0102 P.0106 P.0309 P.0310 P.0323 P.0324**
To disable: **P.0310=0**
Enabled in: **MAN, AUTO, TEST, REMOTE START**

HT GCxxx performs a time-dependent current protection (therefore, the higher the current overload, the shorter the reaction time) The curve used is called **EXTREMELY INVERSE** with function **I^2t**. It is a generator protection as it limits the thermal accumulation of the generator during the supply phase. As engine protection, the maximum power protection must be used, that is independent from the load type.

A maximum current threshold and the maximum time the generator can work with this current are defined. If the current is lower than the defined threshold, the protection does not activate. If the current rises above the threshold, the protection activates with a time inversely proportional to the overcurrent. In order to correctly set the thresholds, perform the following steps:

- Define the system rated current (see10.3.1).
- Set the maximum current threshold with the parameter P.0309, as a percentage of the rated current.
- Set the action time in the parameter P.0310: the protection will be activated within time set if the current is constantly equal to the threshold P.0309 multiplied by $\sqrt{2}$. It will be activated more quickly when the current is higher and more slowly when the current is lower.

In order to calculate the intervention time for a set current, please use the following formula:

$$t_I = \frac{P.0310}{\left(\frac{I}{P.0309}\right)^2 - 1}$$

Where I is the current in the circuit.

Please remember that the protection is performed by performing the integral of the current value during time; therefore, current values above the rated threshold all concur to define the intervention time, with their instant weight resulting from the above formula. Thus, only way to experimentally verify this formula is to switch instantaneously from a normal load situation to an overload situation.

The following graph shows the curve used for enabling protection, with a value of P.0310 set to 60 seconds (I is the maximum current):

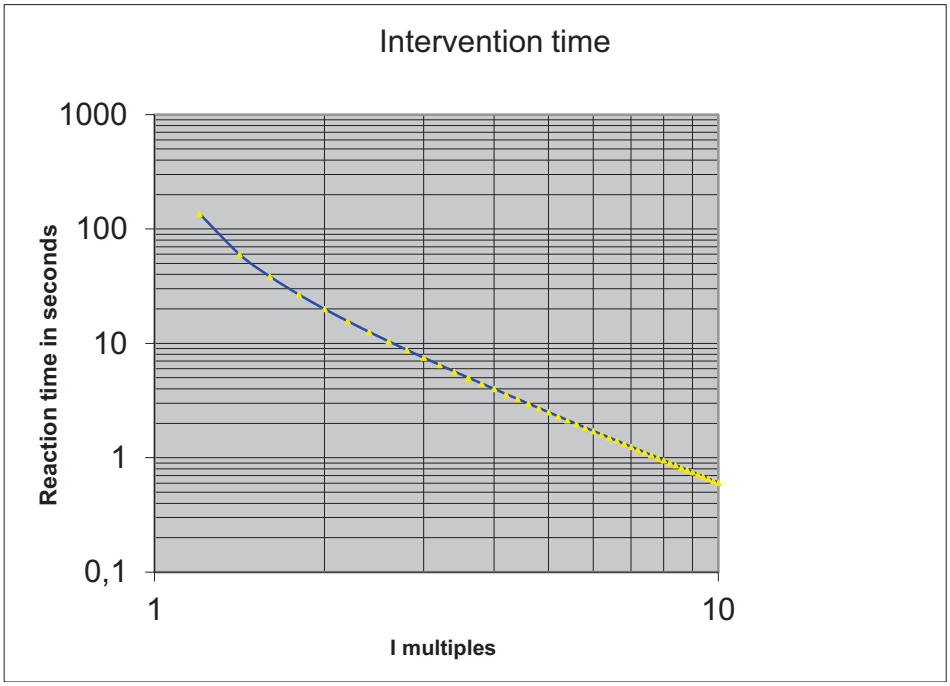

This protection is only enabled if the controller has been started by the controller (if the command for the fuel solenoid is activated) and is disabled in the engine start/stop phases. Type is configurable with parameter P.0323 (though it cannot be configured as warning).

By utilizing P.0324 parameter, it is possible to convert this protection into **51V** protection (values 2 or 3 in P.0324). The 51V protection differs from 51 “normal” protection for the fact that the threshold set with P.0309 is automatically reduced when the generator voltage decreases. In detail:

- If the generator voltage is higher than 80% the rated, the current threshold remains the one set.
- If the generator voltage is less or equal to 20% of the rated, the current threshold becomes 20% of the one set.
- If the generator voltage is between 20% and 80% of the rated, the current threshold is reduced in percentage.

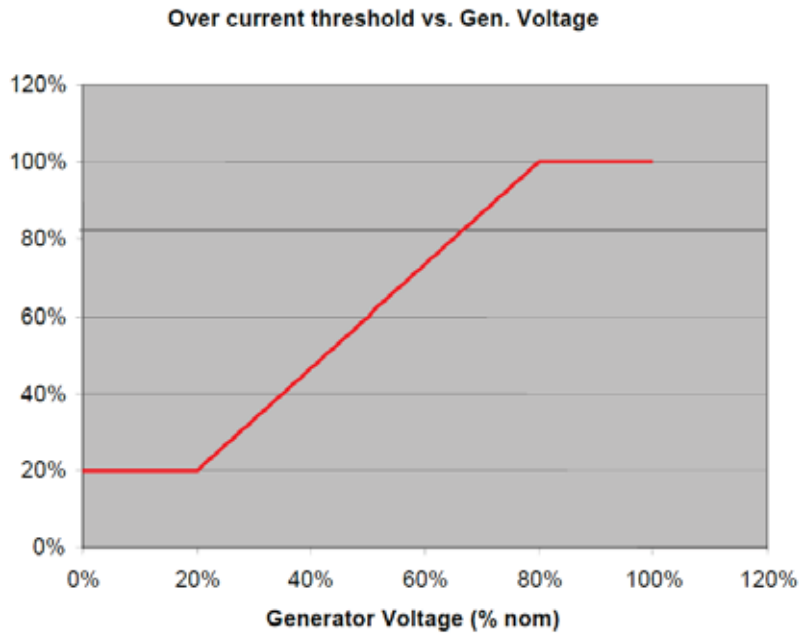

07 – Manual stop while in AUTO

Type: **Alarm**
Related parameters: **-**
To disable: **-**
Enabled in: **AUTO, TEST, REMOTE START**

This protection is always enabled and cannot be disabled . It is activated when pressing the "STOP" button on the front panel or sending a stop command through the serial port or via SMS, while in AUTO, TEST or REMOTE START mode.

08 – Operating conditions failure

Type: **Alarm**
Related parameters: **P.0217**
To disable: **P.0217=0**
Enabled in: **AUTO, TEST, REMOTE START**

This protection is only enabled if the engine has been started by the controller (if the command for the fuel solenoid is activated). It is activated when the generator voltages and frequency are not steady within tolerance range within time P.0217 from the engine running acknowledgement (or from the end of the engine's idle cycle, if enabled).

11 – Power reverse

Type: **Alarm**
Related parameters: **P.0125, P.0313, P.0314**
To disable: **P.0314=0**
Enabled in: **MAN, AUTO, TEST, REMOTE START**

This protection is only enabled if the controller has been started by the controller (if the command for the fuel solenoid is activated) and is disabled in the engine start/stop phases. It activates if, in the previous conditions, the system total active power is negative and has an absolute value continuously above threshold P.0313, for time P.0314. **NB: the protection is not active if the board is measuring power when users are connected to the mains (see 10.4).**

12 – Gen-set locked

Type: **Alarm**
Related parameters: **-**
To disable: **-**
Enabled in: **MAN, AUTO, TEST, REMOTE START**

This protection is always enabled and cannot be disabled . It is activated when the board receives the related control from the serial ports or via SMS. It deactivates when it receives the opposed control from the serial ports or via SMS. Disconnecting the controller from the battery cannot disable the protection. In case of rent, where the customer has requested, for example, the generator for all weekends of a month, the renter can use this anomaly to lock the generator during the days of the week, thus avoiding bringing it and taking it back each time.

13 – Mains circuit breaker (MCB) not closed

Type: **Warning**
Related parameters: **P.0221 P.0507 P.0508 (for input 1 or equivalent for other inputs.**
To disable: **P.0508=0 (for input 1 or equivalent for other inputs).**
Enabled in: **MAN, AUTO, TEST, REMOTE START**

This protection is enabled only if one of the digital inputs of the board is configured to acquire "MCB switch status" (DIF.0006 function) and a time other than zero was set for this input (P.0507 and P.0508 parameters for input 1 or equivalent for the other inputs).

Note: with HT GC5xx for the systems in parallel with the mains it is mandatory that the board receives the feedback of the switch; in these cases, it isn't possible to disable the early warning by setting the delay to zero (the board uses a 2-second delay when set to “0”).

It activates only when MCB is commanded to close and the status acquired is continuously “not active” (open) for the time set. **HT GC5xx**, in AUTO, makes three attempts to close the switch before triggering the anomaly.

For emergency systems, by using P.0221 parameter, it is possible to force the engine to start and the switching of the users onto the generator as a result of this early warning (see document [4]).

14 – Genset circuit breaker (GCB) not closed

Type: **Early warning / deactivation / shutdown**
Related parameters: **P.0507 P.0508 (for input 1 or equivalent for other inputs.**
To disable: **P.0508=0 (for input 1 or equivalent for other inputs).**
Enabled in: **MAN, AUTO, TEST, REMOTE START**

This protection is enabled only if one of the digital inputs of the board is configured to acquire "GCB switch status" (DIF.0007 function) and a time other than zero was set for this input (P.0507 and P.0508 parameters for input 1 or equivalent for the other inputs).

Note: with HT GC5xx for the systems in parallel with the mains or with other generators it is mandatory that the board receives the feedback of the switch; in these cases, it isn't possible to disable the early warning by setting the delay to zero (the board uses a 2-second delay when set to “0”).

It activates only when GCB is commanded to close and the status acquired is continuously “not active” (open) for the time set. **HT GC5xx**, in AUTO, makes three attempts to close the switch before triggering the anomaly.

For HT GC3XX is always an early warning. For HT GC5xx it is an early warning in MAN, a deactivation or a shutdown in AUTO (depending on the situation).

15 – Overload (from contact)

Type: **Alarm**
Related parameters: **P.0507 P.0508 (for input 1 or equivalent for other inputs.**
To disable: **P.0508=0 (for input 1 or equivalent for other inputs).**
Enabled in: **MAN, AUTO, TEST, REMOTE START**

This protection is enabled only if one of the digital inputs of the board is configured to acquire the external "Overload" contact (DIF.0017 function) and if a time other than zero has been set for this input (P.0507 and P.0508 parameters for input 1 or equivalent for the other inputs). Active if the configured input remains continuously active for the associated time.

16 – Short circuit on the generator (50)

Type: **Configurable**
Related parameters: **P.0101 P.0102 P.0106 P.0311 P.0312 P.0323 P.0324**
To disable: **P.0312=0**
Enabled in: **MAN, AUTO, TEST, REMOTE START**

This protection intervenes as quickly as possible and it doesn't depend on timings of the curve represented for maximum current protection. The protection is configured by setting (P.0311) threshold, indicated as percentage of the system rated current (see 10.3.1 for the determination of the rated current from P.0101, P.0102 and P.0106 parameters). It is only enabled if the controller has been started by the controller (if the command for the fuel solenoid is activated) and is disabled in the engine start/stop phases. It activates when the current on at least one phase remains continuously above the P.0311 threshold for time P.0312. Type is configurable with parameter P.0323 (though it cannot be configured as warning).

By utilizing P.0324 parameter, it is possible to convert this protection into **50V** protection (values 1 or 3 in P.0324). The 50V protection differs from the 50 “normal” protection for the fact that the threshold set with P.0311 is automatically reduced when the generator voltage decreases. In detail:

- If the generator voltage is higher than 80% the rated, the current threshold remains the one set.
- If the generator voltage is less or equal to 20% of the rated, the current threshold becomes 20% of the one set.
- If the generator voltage is between 20% and 80% of the rated, the current threshold is reduced in percentage.

Please see the graphic in the anomaly description “06 – Maximum current (51)”.

17 – Over speed (from contact)

Type: **Alarm**
Related parameters: **P.0507 P.0508 (for input 1 or equivalent for other inputs.**
To disable: **P.0508=0 (for input 1 or equivalent for other inputs).**
Enabled in: **MAN, AUTO, TEST, REMOTE START**

This protection is enabled only if one of the digital inputs of the board is configured to acquire the external "Over speed" contact (DIF.0018 function) and if a time other than zero has been set for this input (P.0507 and P.0508 parameters for input 1 or equivalent for the other inputs). It is only enabled if the controller has been started by the controller (if the command for the fuel solenoid is activated) and is disabled in the engine start/stop phases. Active if the configured input remains continuously active for the associated time.

18 – Over speed (from engine speed measurement)

Type: **Alarm**

Related parameters: **P.0110 P.0111 P.0127 P.0333 P.0334 P.0700 P.0701**
To disable: **P.0334=0**
Enabled in: **MAN, AUTO, TEST, REMOTE START**

This protection is enabled only if the board acquires a measure of engine rpm speed (see 10.5.3). It is enabled only if the engine has been started from the board (if the control for the fuel solenoid valve is activated) and it is disabled in the early start and stop stages of the engine. It activates if the acquired speed measure exceeds threshold P.0333 continuously, for time P.0334.

19 – Overspeed (from generator frequency)

Type: **Alarm**
Related parameters: **P.0105 P.0331 P.0332**
To disable: **P.0332=0**
Enabled in: **MAN, AUTO, TEST, REMOTE START**

This protection is only enabled if the controller has been started by the controller (if the command for the fuel solenoid is activated) and is disabled in the engine start/stop phases. It activates if the generator frequency exceeds threshold P.0331 continuously, for time P.0332.

21 – Engine not stopped.

Type: **Alarm**
Related parameters: **P.0214**
To disable: **P.0214=0**
Enabled in: **AUTO, TEST, REMOTE START**

This protection is activated when the engine is not diagnosed stopped within the time configured in P.0214 (by the stop control). NB. This interlock can be activated even if another one is already active.

22 – Overcrank

Type: **Alarm**
Related parameters: **P.0211**
To disable: **-**
Enabled in: **AUTO, TEST, REMOTE START**

This protection is activated after the board has made P.0211 consecutive attempts to start the engine (automatic restarts) without success (for each group of batteries).

23 – Mains circuit breaker (MCB) not open

Type: **Warning/Deactivation**
Related parameters: **P.0507 P.0508 (for input 1 or equivalent for other inputs.**
To disable: **P.0508=0 (for input 1 or equivalent for other inputs).**
Enabled in: **MAN, AUTO, TEST, REMOTE START**

This protection is enabled only if one of the digital inputs of the board is configured to acquire "MCB switch status" (DIF.0006 function) and a time other than zero was set for this input (P.0507 and P.0508 parameters for input 1 or equivalent for the other inputs).

INFORMATION!: with HT GC5xx for the systems in parallel with the mains it is mandatory that the board receives the feedback of the switch; in these cases, it isn't possible to disable the early warning by setting the delay to zero (the board uses a 2-second delay when set to “0”).

It activates only when MCB is commanded to open and the status acquired is continuously “active” (closed) for the time set. **HT GC5xx**, in AUTO, makes three attempts to open the switch before triggering the anomaly.

For HT GC3XX is always an early warning. For HT GC5xx it is normally an early warning: it becomes a shutdown if the system does not provide for continuous parallel with the mains.

24 – Genset circuit breaker (GCB) not open

Type: **Warning/Alarm**
Related parameters: **P.0507 P.0508 (for input 1 or equivalent for other inputs).**
To disable: **P.0508=0 (for input 1 or equivalent for other inputs).**
Enabled in: **MAN, AUTO, TEST, REMOTE START**

This protection is enabled only if one of the digital inputs of the board is configured to acquire "GCB switch status" (DIF.0007 function) and a time other than zero was set for this input (P.0507 and P.0508 parameters for input 1 or equivalent for the other inputs).

Note: with HT GC5xx for the systems in parallel with the mains or with other generators it is mandatory that the board receives the feedback of the switch; in these cases, it isn't possible to disable the early warning by setting the delay to zero (the board uses a 2-second delay when set to “0”).

It activates only when GCB is commanded to open and the status acquired is continuously “active” (closed) for the time set. **HT GC5xx**, in AUTO, makes three attempts to open the switch before triggering the anomaly.

For HT GC3XX is always an early warning. For HT GC5xx it is an early warning in MAN, a shutdown in AUTO.

25 – Minimum fuel level (from contact)

Type: **Alarm**
Related parameters: **P.0507 P.0508 (for input 1 or equivalent for other inputs.**
To disable: **P.0508=0 (for input 1 or equivalent for other inputs).**
Enabled in: **MAN, AUTO, TEST, REMOTE START**

This protection is enabled only if one of the digital inputs of the board is configured to acquire the external "Minimum fuel level" contact (DIF.0008 function) and if a time other than zero has been set for this input (P.0507 and P.0508 parameters for input 1 or equivalent for the other inputs). Active if the configured input remains continuously active for the associated time.

26 – Minimum fuel level (from analog sensor)

Type: **Alarm**
Related parameters: **P.0114 P.0347 P.0348 P.4001 (for input 1 or equivalent for other inputs.**
To disable: **P.0348=0**
Enabled in: **MAN, AUTO, TEST, REMOTE START**

This protection is enabled only if the board acquires fuel level measurement. It can acquire it from its analogue inputs (see **Errore. L'origine riferimento non è stata trovata.**). It activates if the level measure remains continuously below or equal to threshold P.0347 for time P.0348.

27 – Low fuel level (from contact)

Type: **Warning**
Related parameters: **P.0507 P.0508 (for input 1 or equivalent for other inputs.**
To disable: **P.0508=0 (for input 1 or equivalent for other inputs).**
Enabled in: **MAN, AUTO, TEST, REMOTE START**

This protection is enabled only if one of the digital inputs of the board is configured to acquire the external "Low fuel level" contact (DIF.0009 function) and if a time other than zero has been set for this input (P.0507 and P.0508 parameters for input 1 or equivalent for the other inputs). Active if the configured input remains continuously active for the associated time.

28 – Low fuel level (from analog sensor)

Type: **Warning**
Related parameters: **P.0114 P.0345 P.0346 P.4001 (for input 1 or equivalent for other inputs).**
To disable: **P.0346=0**
Enabled in: **MAN, AUTO, TEST, REMOTE START**

This protection is enabled only if the board acquires fuel level measurement. It can acquire it from its analogue inputs (see **Errore. L'origine riferimento non è stata trovata.**). It activates if the level measure remains continuously below or equal to threshold P.0345 for time P.0346.

29 – High fuel level (from contact)

Type: **Warning**
Related parameters: **P.0507 P.0508 (for input 1 or equivalent for other inputs.**
To disable: **P.0508=0 (for input 1 or equivalent for other inputs).**
Enabled in: **MAN, AUTO, TEST, REMOTE START**

This protection is enabled only if one of the digital inputs of the board is configured to acquire the external "High fuel level" contact (DIF.0012 function) and if a time other than zero has been set for this input (P.0507 and P.0508 parameters for input 1 or equivalent for the other inputs). Active if the configured input remains continuously active for the associated time.

30 – High fuel level (from analog sensor)

Type: **Warning**
Related parameters: **P.0114 P.0343 P.0344 P.4001 (for input 1 or equivalent for other inputs.**
To disable: **P.0344=0**
Enabled in: **MAN, AUTO, TEST, REMOTE START**

This protection is enabled only if the board acquires fuel level measurement. It can acquire it from its analogue inputs (see **Errore. L'origine riferimento non è stata trovata.**). It activates if the level measure remains continuously above or equal to threshold P.0343 (in percentage) for time P.0344.

31 – High coolant temperature (from contact)

Type: **Warning**
Related parameters: **P.0216 P.0507 P.0508 (for input 1 or equivalent for other inputs).**
To disable: **P.0508=0 (for input 1 or equivalent for other inputs).**
Enabled in: **MAN, AUTO, TEST, REMOTE START**

This protection is enabled only if one of the digital inputs of the board is configured to acquire the external "High coolant temperature" contact (DIF.0015 function) and if a time other than zero has been set for this input (P.0507 and P.0508 parameters for input 1 or equivalent for the other inputs). It is only enabled if the controller has been started by the controller (if the command for the fuel solenoid is activated) and is disabled in the engine start/stop phases. It activates if the input configured is continuously “active” for the time configured, but only after the time P.0216 (oil mask) from engine start has elapsed (this is to allow you to start the engine idle, to cool it off)

32 – High coolant temperature (from analog sensor)

Type: **Warning**
Related parameters: **P.0113 P.0216 P.0335 P.0336 P.0700 P.4001 (for input 1 or equivalent for other inputs).**
To disable: **P.0336=0**
Enabled in: **MAN, AUTO, TEST, REMOTE START**

This protection is enabled only if the controller acquires the measure of the engine coolant temperature. It can acquire it from its analogue inputs (see 10.5.12) or from CAN-BUS (P.0700 different from zero). It is only enabled if the controller has been started by the controller (if the command for the fuel solenoid is activated) and is disabled in the engine start/stop phases. It activates if the temperature remains continuously above or equal to threshold P.0335 for time P.0336, but only after the time P.0216 (oil mask) from engine start has elapsed (this is to allow you to start the engine idle, to cool it off)

33 – Maximum coolant temperature (from contact)

Type: **Alarm**
Related parameters: **P.0216 P.0507 P.0508 (for input 1 or equivalent for other inputs).**
To disable: **P.0508=0 (for input 1 or equivalent for other inputs).**
Enabled in: **MAN, AUTO, TEST, REMOTE START**

This protection is enabled only if one of the digital inputs of the board is configured to acquire the external "Maximum coolant temperature" contact (DIF.0016 function) and if a time other than zero has been set for this input (P.0507 and P.0508 parameters for input 1 or equivalent for the other inputs). It is only enabled if the controller has been started by the controller (if the command for the fuel solenoid is activated) and is disabled in the engine start/stop phases. It activates if the input configured is continuously “active” for the time configured, but only after the time P.0216 (oil mask) from engine start has elapsed (this is to allow you to start the engine idle, to cool it off)

34 – Maximum coolant temperature (from analog sensor)

Type: **Warning/Alarm**
Related parameters: **P.0113 P.0216 P.0337 P.0338 P.0700 P.4001 (for input 1 or equivalent for other inputs).**
To disable: **P.0338=0**
Enabled in: **MAN, AUTO, TEST, REMOTE START**

This protection is enabled only if the controller acquires the measure of the engine coolant temperature. It can acquire it from its analogue inputs (see **Errore. L'origine riferimento non è stata trovata.**) or from CAN-BUS (P.0700 different from zero). It is only enabled if the controller has been started by the controller (if the command for the fuel solenoid is activated) and is disabled in the engine start/stop phases. It activates if the temperature remains continuously above or equal to threshold P.0337 for time P.0338, but only after the time P.0216 (oil mask) from engine start has elapsed (this is to allow you to start the engine idle, to cool it off)

37 – Starter battery voltage, low

Type: **Warning**
Related parameters: **P.0362 P.0363**
To disable: **P.0363=0**
Enabled in: **MAN, AUTO, TEST, REMOTE START**

It is always enabled except when the cranking motor is activated. It activates if the battery voltage is continuously lower than the threshold P.0362 for time P.0363.

INFORMATION!: the threshold P.0362 is expressed as a percentage of the rated battery voltage which is not configurable but is automatically selected by the controller between 12 e 24 VDC. Selection is made when the controller is powered and every time it is forced in OFF/RESET mode. If the controller previously sensed a value lower than, or equal to, 17 VDC, it considers to be powered by a 12 VDC battery, otherwise it will consider a 24 VDC rated voltage.

38 – Starter battery voltage, high

Type: **Warning**
Related parameters: **P.0364 P.0365**
To disable: **P.0365=0**
Enabled in: **MAN, AUTO, TEST, REMOTE START**

It is always enabled except when the cranking motor is activated. It activates if the battery voltage is continuously above threshold P.0364 for time P.0365.

INFORMATION!: the threshold P.0364 is expressed as a percentage of the rated battery voltage which is not configurable but is automatically selected by the controller between 12 e 24 VDC. Selection is made when the controller is powered and every time it is forced in OFF/RESET mode. If the controller previously sensed a value lower than, or equal to, 17 VDC, it considers to be powered by a 12 VDC battery, otherwise it will consider a 24 VDC rated voltage.

39 – Service required

Type: **Configurable**
Related parameters: **P.0424 P.0425**
To disable: **P.0424=0**
Enabled in: **MAN, AUTO, TEST, REMOTE START**

It activates after P.0424 engine running hours since last parameter P.0424 setting. Engine operating hours are counted even when engine is not started by the controller. When activated, it acts as warning, unload , deactivation or alarm as configured with P.0425.

It cannot be cancelled even disconnecting the controller's power supply. Only possible setting P.0424 again, setting it to zero to disable the function or confirming the actual value or setting a new one. To be programmed, parameters P.0424 and P.0425 require “installer” access level: this function can be used for gen-set rental in order to lock the gen-set when the established hours are elapsed.

41 – Minimum oil pressure (from contact)

Type: **Alarm**
Related parameters: **P.0216 P.0507 P.0508 (for input 1 or equivalent for other inputs).**
To disable: **P.0508=0 (for input 1 or equivalent for other inputs).**
Enabled in: **MAN, AUTO, TEST, REMOTE START**

This protection is enabled only if one of the digital inputs of the board is configured to acquire the external "Minimum oil pressure" contact (DIF.0013 function) and if a time other than zero has been set for this input (P.0507 and P.0508 parameters for input 1 or equivalent for the other inputs). It is only enabled if the controller has been started by the controller (if the command for the fuel solenoid is activated) and is disabled in the engine start/stop phases. It activates if the input configured is continuously “active” for the time configured, but only after the time P.0216 (oil mask) from engine start has elapsed (this is to allow you to ignore the normal status of low pressure, which occurs at startup).

42 – Minimum oil pressure (from analogue sensor)

Type: **Alarm**
Related parameters: **P.0112 P.0216 P.0341 P.0342 P.0700 P.4001 (for input 1 or equivalent for other inputs).**
To disable: **P.0342=0**
Enabled in: **MAN, AUTO, TEST, REMOTE START**

This protection is enabled only if the controller acquires the measure of the engine lubrication oil pressure. It can acquire it from its analogue inputs (see **Errore. L'origine riferimento non è stata trovata.**) or from CAN-BUS (P.0700 different from zero). It is only enabled if the controller has been started by the controller (if the command for the fuel solenoid is activated) and is disabled in the engine start/stop phases. It is activated if the measure of the temperature is higher than or equal to P.0341 threshold consecutively for P.0342 time, but only after P.0216 time has elapsed (oil masking) from the starting of the engine (used to override the normal status of low pressure at starting).

43 – Low oil pressure (from contact)

Type: **Warning**
Related parameters: **P.0216 P.0507 P.0508 (for input 1 or equivalent for other inputs).**
To disable: **P.0508=0 (for input 1 or equivalent for other inputs).**
Enabled in: **MAN, AUTO, TEST, REMOTE START**

This protection is enabled only if one of the digital inputs of the board is configured to acquire the external "Low oil pressure" contact (DIF.0014 function) and if a time other than zero has been set for this input (P.0507 and P.0508 parameters for input 1 or equivalent for the other inputs). It is only enabled if the controller has been started by the controller (if the command for the fuel solenoid is activated) and is disabled in the engine start/stop phases. It activates if the input configured is continuously “active” for the time configured, but only after the time P.0216 (oil mask) from engine start has elapsed (this is to allow you to ignore the normal status of low pressure, which occurs at startup).

44 – Low oil pressure (from analog sensor)

Type: **Warning**
Related parameters: **P.0112 P.0216 P.0339 P.0340 P.0700 P.4001 (for input 1 or equivalent for other inputs).**
To disable: **P.0340=0**
Enabled in: **MAN, AUTO, TEST, REMOTE START**

This protection is enabled only if the controller acquires the measure of the engine lubrication oil pressure. It can acquire it from its analogue inputs (see **Errore. L'origine riferimento non è stata trovata.**) or from CAN-BUS (P.0700 different from zero). It is only enabled if the controller has been started by the controller (if the command for the fuel solenoid is activated) and is disabled in the engine start/stop phases. It is activated if the measure of the temperature is higher than or equal to P.0339 threshold consecutively for P.0340 time, but only after P.0216 time has elapsed (oil masking) from the starting of the engine (used to override the normal status of low pressure at starting).

45 – Maximum auxiliary current

Type: **Alarm**
Related parameters: **P.0109 P.0367 P.0368**
To disable: **P.0368=0**
Enabled in: **MAN, AUTO, TEST, REMOTE START**

This protection is enabled only when the board is configured to use the auxiliary current measuring input (P.0109 parameter different from zero). It is only enabled if the controller has

been started by the controller (if the command for the fuel solenoid is activated) and is disabled in the engine start/stop phases. It activates if the auxiliary current value is continuously above threshold P.0367 for time P.0368. It is possible to disable this protection without changing the parameters, by activating a digital input configured with DIF.0069 function - "Auxiliary current protection disabling" in P.0507 parameter for input 1 or equivalent ones for the other inputs.

48 – Emergency stop

Type: **Alarm**
Related parameters: **P.0507 P.0508 (for input 1 or equivalent for other inputs).**
To disable: -
Enabled in: **MAN, AUTO, TEST, REMOTE START**

This protection is enabled only if one of the digital inputs of the board is configured to acquire the external "Emergency stop" contact (DIF.0028 function, P.0507 and P.0508 parameters for input 1 or equivalent ones for the other inputs). It is activated if the configured input is "non active" consecutively for the associated time.

49 – Maximum power

Type: **Configurable**
Related parameters: **P.0125 P.0350 P.0351 P.0352**
To disable: **P.0351=0**
Enabled in: **MAN, AUTO, TEST, REMOTE START**

It is only enabled if the controller has been started by the controller (if the command for the fuel solenoid is activated) and is disabled in the engine start/stop phases. It activates if the system total active power is positive and remains continuously over the threshold P.0350 for time P.0351. With parameter P.0352 it is possible to select the protection to be activated (warning, deactivation, unload alarm). **WARNING! The protection does not work when the controller measures the mains currents (see 10.4).**

51 – High controller temperature

Type: **Warning**
Related parameters: **P.0366**
To disable: **P.0366 = 99.0**
Enabled in: **MAN, AUTO, TEST, REMOTE START**

It activates if the internal controller temperature is over the threshold P.0366, even for an instant.

52 – Generator voltages unbalance

Type: **Alarm**
Related parameters: **P.0101 P.0102 P.0315 P.0316**
To disable: **P.0316=0**
Enabled in: **MAN, AUTO, TEST, REMOTE START**

It is only enabled if the system is three-phase (P.0101=3) and only if the engine has been started by the controller (if the command for the fuel solenoid is activated) and is disabled when the engine is started/stopped. Threshold P.0315 is expressed as a percentage of the system rated voltage It represents the maximum acceptable difference (absolute value) between two phase-to-phase voltages. It activates if the difference between two phase-to-phase voltages (absolute value) is continuously over the threshold P.0315 for time P.0316.

53 – Generator current unbalance

Type: **Alarm**
Related parameters: **P.0101 P.0102 P.0106 P.0317 P.0318**
To disable: **P.0318=0**
Enabled in: **MAN, AUTO, TEST, REMOTE START**

It is only enabled if the system is three-phase (P.0101=3) and only if the engine has been started by the controller (if the command for the fuel solenoid is activated) and is disabled when the engine is started/stopped. P.0317 threshold is expressed as a percentage of the rated current of the system (see 10.3.1 how to infer rated current from P.0102 and P.0106). It represents the maximum acceptable difference (absolute value) between any two phase currents. The protection activates if the difference between any two currents (absolute value) is continuously over the threshold P.0317 for time P.0318. **WARNING! The protection does not work when the controller measures the mains currents (see 10.4).**

55 – Wrong phases sequence

Type: **Configurable**
Related parameters: **P.0101 P.0319 P.0320**
To disable: **P.0319=0**
Enabled in: **MAN, AUTO, TEST, REMOTE START**

It is only enabled if the system is three-phase (P.0101=3) and only if the engine has been started by the controller (if the command for the fuel solenoid is activated) and is disabled when the engine is started/stopped. Furthermore, generator voltages and frequency should be within tolerance bracket and GCB switch should be open. Parameter P.0319 allows you to select the phases frequency required (0=disables feature, 1=clockwise rotation, 2=counter-clockwise rotation, 3=like the mains). The protection activates when the generator rotation direction does not match the one configured, with a 0.5 seconds filter time. When activated, it acts as warning, unload, deactivation or alarm as configured with P.0320.

57 – Clock not valid

Type: **Warning**
Related parameters: **P.0418 P.0419 P.0420 P.0421 P.0422 P.0423 P.0426 P.0427 P.0428**
To disable: **-**
Enabled in: **MAN, AUTO, TEST, REMOTE START**

It is always enabled It is activated if the board has recognized clock status and functions using the clock as invalid, such as the periodic weekly test (P.0418, P.0419and P.0420), the time to enable work (P.0421, P.0422, P.0423) or the time for forcing intervention (P.0426, P.0427, P.0428), have been configured. To deactivate it, you need to set the clock.

61 – Lost Excitation

Type: **Alarm**
Related parameters: **P.0321 P.0322**
To disable: **P.0322 = 0**
Enabled in: **MAN, AUTO, TEST, REMOTE START**

It is only enabled if the controller has been started by the controller (if the command for the fuel solenoid is activated) and is disabled in the engine start/stop phases. It activates if the reactive power is negative (capacitive) and continuously exceeds (in absolute value) threshold P.0321 for time P.0322. **WARNING! The protection does not work when the controller measures the mains currents (see 10.4).**

62 – Faulty engine CAN-BUS 0 link

Type: **Configurable**
Related parameters: **P.0700 P.0709**
To disable: **-**
Enabled in: **MAN, AUTO, TEST, REMOTE START**

It is enabled only if CAN0 CAN-BUS (engine) is configured (P.0700 <> 0). It is activated when the internal CAN controller switches to BUS-OFF status because of bus communication errors. Parameter P.0709 is used to select the protection type (warning, unloading, deactivation, interlock).

64 – Fuel pump failure

Type: **Warning**
Related parameters: **P.0404, P.0581 (for output 1 or equivalent for other outputs).**
To disable: **P.0404 = 0**
Enabled in: **MAN, AUTO, TEST, REMOTE START**

It is enabled only if there is an output configured to control the fuel pump (DOF.0003 "fuel pump" function in P.0581 parameter for output 1 or equivalent for the other outputs). It is activated when the pump works consecutively for P.0404 time: it turns off the pump (note: it does not set the pump in MAN-OFF, its leaves in its mode; as soon as the early warning is acknowledged, the pump will be started again).

65 – Low coolant temperature (from analog sensor)

Type: **Warning**
Related parameters: **P.0113 P.0353 P.0354 P.0700 P.4001 (for input 1 or equivalent for other inputs).**
To disable: **P.0354 = 0**
Enabled in: **MAN, AUTO, TEST, REMOTE START**

This protection is enabled only if the controller acquires the measure of the engine coolant temperature. It can acquire it from its analogue inputs (see **Errore. L'origine riferimento non è stata trovata.**) or from CAN-BUS (P.0700 different from zero). It activates if the coolant temperature remains continuously below threshold P.0353 for time P.0354.

98 – Engine communication lost.

Type: **Configurable**
Related parameters: **P.0700 P.0709 P.0711**
To disable: **P.0709 = 0 (not for MTU MDEC engines)**
Enabled in: **MAN, AUTO, TEST, REMOTE START**

It is enabled only if engine CAN0 CAN-BUS is configured (P.0700 different from 0). For MTU MDEC engines it is activated as per specification when the board does not receive NMT ALIVE PDU message consecutively for the specified time. For the other types of engines, it is activated if the controller does not continuously receive messages from the engine for time P.0711. With P.0709 the protection is configured as warning, deactivation unload or interlock.

104 – Minimum speed (from engine speed measurement)

Type: **Deactivation**
Related parameters: **P.0110 P.0111 P.0127 P.0358 P.0359 P.0700 P.0701**
To disable: **P.0359=0**
Enabled in: **MAN, AUTO, TEST, REMOTE START**

This protection is enabled only if the board acquires a measure of engine rpm speed (see 10.5.3). It is enabled only if the engine has been started from the board (if the control for the fuel solenoid valve is activated) and it is disabled in the early start and stop stages of the engine. It is disabled during the IDLE cycle. It is activated when acquired speed is lower than P.0358 threshold, consecutively for P.0359 time.

105 – Belt from Can-Bus is broken

Type: **Warning**
Related parameters: **P.0700 P.0704**
To disable: **bit 12 di P.0704 on.**
Enabled in: **MAN, AUTO, TEST, REMOTE START**

This protection is enabled only if the board is connected to the engine via the CAN BUS (P.0700 different from zero). It is activated when the engine signals the battery-charger alternator failure status over the CAN BUS.

106 – Maximum exported reactive power

Type: **Alarm**
Related parameters: **P.0379 P.0380**
To disable: **P.0380 = 0**
Enabled in: **MAN, AUTO, TEST, REMOTE START**

It is only enabled if the controller has been started by the controller (if the command for the fuel solenoid is activated) and is disabled in the engine start/stop phases. It is activated if the reactive power is positive and is higher than P.0379 threshold, consecutively for P.0380 time.

WARNING! The protection does not work when the controller measures the mains currents (see 10.4).

118 – Overspeed from CAN BUS

Type: **Alarm**
Related parameters: **P.0700 P.0704**
To disable: **bit 11 di P.0704 on.**
Enabled in: **MAN, AUTO, TEST, REMOTE START**

This protection is enabled only if the board is connected to the engine via the CAN BUS (P.0700 different from zero). It is activated when the engine signals the overspeed state over the CAN BUS.

132 – High coolant temperature from CAN-BUS

Type: **Warning**
Related parameters: **P.0700 P.0704**
To disable: **bit 5 di P.0704 on.**
Enabled in: **MAN, AUTO, TEST, REMOTE START**

This protection is enabled only if the board is connected to the engine via the CAN BUS (P.0700 different from zero). It is activated when the engine signals the coolant high temperature state over the CAN BUS. For SCANIA engine only: the protection is disabled in the first P.0216 seconds from the starting of the engine.

134 – Maximum coolant temperature from CAN-BUS

Type: **Alarm**
Related parameters: **P.0700 P.0704**
To disable: **bit 6 di P.0704 on.**

Enabled in: **MAN, AUTO, TEST, REMOTE START**

This protection is enabled only if the board is connected to the engine via the CAN BUS (P.0700 different from zero). It is activated when the engine signals the coolant maximum temperature state over the CAN BUS. For SCANIA engine only: the protection is disabled in the first P.0216 seconds from the starting of the engine.

135 – Minimum coolant level from CAN-BUS.

Type: **Alarm**
Related parameters: **P.0700 P.0704**
To disable: **bit 8 di P.0704 on.**
Enabled in: **MAN, AUTO, TEST, REMOTE START**

This protection is enabled only if the board is connected to the engine via the CAN BUS (P.0700 different from zero). It is activated when the engine signals the minimum coolant level state over the CAN BUS

136 – Low coolant level from CAN BUS

Type: **Warning**
Related parameters: **P.0700 P.0704**
To disable: **bit 7 di P.0704 on.**
Enabled in: **MAN, AUTO, TEST, REMOTE START**

This protection is enabled only if the board is connected to the engine via the CAN BUS (P.0700 different from zero). It is activated when the engine signals the low coolant level state over the CAN BUS.

137 – Low battery voltage from CAN BUS

Type: **Warning**
Related parameters: **P.0700 P.0704**
To disable: **bit 10 di P.0704 on.**
Enabled in: **MAN, AUTO, TEST, REMOTE START**

This protection is enabled only if the board is connected to the engine via the CAN BUS (P.0700 different from zero). It is activated when the engine signals the low battery voltage state over the CAN BUS.

142 – Minimum oil pressure from CAN BUS

Type: **Alarm**
Related parameters: **P.0700 P.0704**
To disable: **bit 2 di P.0704 on.**
Enabled in: **MAN, AUTO, TEST, REMOTE START**

This protection is enabled only if the board is connected to the engine via the CAN BUS (P.0700 different from zero). It is activated when the engine signals the minimum oil pressure state over the CAN BUS. For SCANIA engine only: the protection is disabled in the first P.0216 seconds from the starting of the engine.

144 – Low oil pressure from CAN BUS

Type: **Warning**
Related parameters: **P.0700 P.0704**
To disable: **bit 1 di P.0704 on.**
Enabled in: **MAN, AUTO, TEST, REMOTE START**

This protection is enabled only if the board is connected to the engine via the CAN BUS (P.0700 different from zero). It is activated when the engine signals the low oil pressure state over the CAN BUS.

158 – High oil temperature from CAN BUS

Type: **Warning**
Related parameters: **P.0700 P.0704**
To disable: **bit 3 di P.0704 on.**
Enabled in: **MAN, AUTO, TEST, REMOTE START**

This protection is enabled only if the board is connected to the engine via the CAN BUS (P.0700 different from zero). It is activated when the engine signals the high oil temperature state over the CAN BUS.

159 – Maximum oil temperature from CAN BUS

Type: **Alarm**
Related parameters: **P.0700 P.0704**
To disable: **bit 4 di P.0704 on.**
Enabled in: **MAN, AUTO, TEST, REMOTE START**

This protection is enabled only if the board is connected to the engine via the CAN BUS (P.0700 different from zero). It is activated when the engine signals the maximum oil temperature state over the CAN BUS.

160 – Water in fuel from CAN BUS

Type: **Warning**
Related parameters: **P.0700 P.0704**
To disable: **bit 9 di P.0704 on.**
Enabled in: **MAN, AUTO, TEST, REMOTE START**

This protection is enabled only if the board is connected to the engine via the CAN BUS (P.0700 different from zero). It is activated when the engine signals the water in fuel state over the CAN BUS.

198 –Warnings from CAN BUS (cumulative)

Type: **Warning**
Related parameters: **P.0700**
To disable: **bit 15 di P.0704 on.**
Enabled in: **MAN, AUTO, TEST, REMOTE START**

This protection is enabled only if the board is connected to the engine via the CAN BUS (P.0700 different from zero). It is activated when the engine signals the active state of its yellow lamp over the CAN BUS.

199 – Alarms from CAN BUS (cumulative)

Type: **Configurable**
Related parameters: **P.0700**
To disable: **bit 16 di P.0704 on.**
Enabled in: **MAN, AUTO, TEST, REMOTE START**

This protection is enabled only if the board is connected to the engine via the CAN BUS (P.0700 different from zero). It is activated when the engine signals the active state of its red lamp over the CAN BUS. Using bit 14 of P.0704 it is possible to configure the protection as warning or alarm.

200 – (HT GC5xx only) PMCB bus link fault

Type: **Warning**
Related parameters: **P.0800**
To disable: -
Enabled in: **MAN, AUTO, TEST, REMOTE START**

It's enabled only if PMCB bus is installed and enabled (P.0800 different from 0). It is activated when the internal CAN controller switches to BUS-OFF status because of bus communication errors.

201 – (HT GC5xx only) Duplicated address on PMCB bus

Type: **Warning**
Related parameters: **P.0800 P.0452**
To disable: -
Enabled in: **MAN, AUTO, TEST, REMOTE START**

It's enabled only if PMCB bus is installed and enabled (P.0800 different from 0). It is activated if another generator-control board connected to the bus has the same address of this one (P.0452).

202 – (HT GC5xx only) Wrong number of gen. over the PMCB BUS

Type: **Warning**
Related parameters: **P.0803**
To disable: **P.0803 = 0**
Enabled in: **MAN, AUTO, TEST, REMOTE START**

It's enabled only if PMCB bus is installed and enabled (P.0800 different from 0). It is activated if a number of generator-control boards other than configured with P.0803 is connected to PMCB bus.

204 – (HT GC5xx only) Failure to close NECB switch

Type: **Warning**
Related parameters: **P.0581 for output 1 (or equivalent for other outputs)**
P.0507 P.0508 for input 1 (or equivalent for other inputs)
To disable: -
Enabled in: **AUTO, TEST, REMOTE START**

This anomaly is enabled only if the board controls NECB switch for the earthing of the neutral of the generator (DOF.0033 function in P.0581 parameter for output 1 or equivalent for the other outputs), and if it acquires its feedback (DIF.3005 function in P.0507 parameter for input 1 or equivalent for the other inputs). It is activated if the switch remains open for the time associated with the feedback input, at the presence of the closing control.

205 – (HT GC5xx only) Failure to open NECB switch

Type: **Warning**
Related parameters: **P.0581 for output 1 (or equivalent for other outputs)**
P.0507 P.0508 for input 1 (or equivalent for other inputs)
To disable: -
Enabled in: **AUTO, TEST, REMOTE START**

This anomaly is enabled only if the board controls NECB switch for the earthing of the neutral of the generator (DOF.0033 function in P.0581 parameter for output 1 or equivalent for the other outputs), and if it acquires its feedback (DIF.3005 function in P.0507 parameter for input

1 or equivalent for the other inputs). It is activated when the switch remains closed for the time associated with the feedback input, at the presence of the opening control.

252 – Expansion modules missing (EXBUS)

Type: **Warning**
Related parameters: **P.0141 P.0142 P.0143 P.0144**
To disable: **-**
Enabled in: **MAN, AUTO, TEST, REMOTE START**

The protection is enabled if the CAN-BUS is activated (P.0141, P.0142, P.0143 o P.0144 different from zero). It will be activated when one or more boards configured with the previous parameters isn't communicating on the CAN-BUS. On page S.02, by selecting this early warning, the board shows which module isn't communicating.

253 – Missing analogue measurement (EXBUS)

Type: **Warning**
Related parameters: **P.0142 P.0143**
To disable: **-**
Enabled in: **MAN, AUTO, TEST, REMOTE START**

The protection is enabled if the CAN-BUS is activated (P.0141, P.0142, P.0143 o P.0144 different from zero). It will be activated when HT GCxxx doesn't receive an analogue measure from the CAN-BUS. The board verifies the sole presence of the actually utilized analogue measures (those that have a function different from zero in P.4131 parameter or equivalent ones for the other analogue inputs). On S.02 page, by selecting this early warning, the board indicates which channel of which module isn't carrying out the measurement.

254 – Duplicate address (EXBUS)

Type: **Warning**
Related parameters: **P.0141 P.0142 P.0143 P.0144**
To disable: **-**
Enabled in: **MAN, AUTO, TEST, REMOTE START**

The protection is enabled if the CAN-BUS is activated (P.0141, P.0142, P.0143 o P.0144 different from zero). It will be activated if two or more expansion modules are configured with the same address. On S.02 page, by selecting this early warning, the board indicates which module has the duplicated address.

255 – Disconnected sensor (EXBUS)

Type: **Warning**
Related parameters: **P.0142 P.0143**
To disable: **-**
Enabled in: **MAN, AUTO, TEST, REMOTE START**

The protection is enabled if the CAN-BUS is activated (P.0141, P.0142, P.0143 o P.0144 different from zero). It will be activated when a DIGRIN, DITHERM or DIVIT module reports the status of “disconnected sector”. On S.02 page, by selecting this early warning, the board indicates which channel of which module has a disconnected sensor.

271 – (HT GC5xx only) Failure to parallel on GCB

Type: **Alarm**
Related parameters: **P.0802 P.0852 P.0854**
To disable: -

Enabled in: **AUTO, TEST, REMOTE START**

This protection is enabled only if plant configuration (P.0802, P.0854) allows the synchronization on GCB circuit breaker. It's activated when the GCB circuit breaker does not close itself within the time configured with P.0852 from the start of the synchronization.

272 – (HT GC5xx only) MCB parallel failure (reverse parallel)

Type: **Warning**
Related parameters: **P.0802 P.0853 P.0855**
To disable: -
Enabled in: **AUTO, TEST, REMOTE START**

This protection is enabled only if plant configuration (P.0802, P.0855) allows the synchronization on MCBcircuit breaker. It's activated when the MCB circuit breaker does not close itself within the time configured with P.0853 from the start of the synchronization.

273 – (HT GC5xx only) Inconsistent parameters

Type: **Warning/Alarm**
Related parameters: **-**
To disable: -
Enabled in: **MAN, AUTO, TEST, REMOTE START**

This protection is always enabled and is activated when plant configuration parameters are non consistent. For example, to configure a system in parallel with the mains, surely there digital inputs that acquire the statuses of the switches should exist. Missing the above conditions, the alarm starts. An explanation is provided on the page S.02 of the display to better understand what the problem is.

The anomaly is also triggered if (for whatever reason) factory defaults for all programming parameters are reloaded. In this case, to eliminate the alarm, it is necessary to reprogram at least one of the parameters that require SICES password (see paragraph 7.1.3).

274 – (HT GC5xx only) Production line open

Type: **Deactivation**
Related parameters: **P.0507 P.0508 (for input 1, or equivalent)**
To disable: -
Enabled in: **MAN, AUTO, TEST, REMOTE START**

If an external switch disconnects the generator from the mains while it is in parallel with the mains, the board triggers this anomaly (GCB switch is opened immediately and the generator is stopped with the cooling cycle). To recognize the opening of the switch, a digital input can be configured (DIF.0051 "Sectioned self-producing line" function). If the input is activated, the active board triggers the anomaly.

275 – (HT GC5xx only) Interface device not open

Type: **Alarm**
Related parameters: **P.0900**
To disable: **-**
Enabled in: **MAN, AUTO, TEST, REMOTE START**

When the generator is in parallel with the mains, if the switch configured as "interface device" (P.0900) does not open within 0.5 seconds from the acknowledgement of the lack of mains, the active board triggers this anomaly.

276 – (HT GC5xx only) Alarm from master device

Type: **Warning/Alarm**
Related parameters: **-**
To disable: **-**
Enabled in: **MAN, AUTO, TEST, REMOTE START**

This alarm is issued when an external "master" device (MC100) requires it over the PMCB. MC100 uses this possibility, for example, when its emergency key is pressed.

277 – (HT GC5xx only) GCB cannot be closed

Type: **Warning**
Related parameters: **-**
To disable: **-**
Enabled in: **MAN, AUTO, TEST, REMOTE START**

This warning is issued when the GCB circuit breaker has to be closed, but actually it cannot be closed due to an external non consistent condition (for example when the mains is in tolerance, the MCB is closed but there are no voltages on the bus-bars). An explanation is provided on the page S.02 of the display to better understand what the problem is.

278 – (HT GC5xx only) MCB cannot be closed

Type: **Warning**
Related parameters: **-**
To disable: **-**
Enabled in: **MAN, AUTO, TEST, REMOTE START**

This early warning is activated when the board needs to close MCB, but at present it cannot be closed due to inconsistent external conditions (for example, if GCB is closed but there is no voltage on parallel bars). An explanation is provided on the page S.02 of the display to better understand what the problem is.

12. Other functions

12.1 Clock

The board is equipped with a standard hardware clock/calendar with internal rechargeable power supply, which keeps it active and updated for long periods even in absence of Vbatt supply. It is shown in detail in the page S.06. It can be set through the programming menu 4.2 or the serial port, and is used for many functions:

- History logs recordings.
- Engine TEST startup weekly planning.
- Weekly planning of time intervals in which the gen-set can start automatically.
- Weekly scheduling of the periods in which the generator has to intervene, regardless of system conditions.

The first function was widely explained in the chapter8; the descriptions of the other three functions will follow.

The configuration of activity scheduling and updating of the clock/ calendar display are possible by operating directly from the keyboard; however, it is advisable to use BoardPrg3, which greatly simplifies the setting of schedules and allows the automatic synchronization of HT GCxxx clock/calendar with the time of the PC it is connected to with a single click.

12.1.1 Engine TEST startup weekly planning.

The engine TEST startup is planned on a weekly basis. It is namely possible to specify on which days of the week the engine should be started as test. **Periodical test start-up is not linked to manual or auto engine starts.** I.e. the engine may have been used just few minutes before but test will anyway start at due time. In addition to the dates, it is also possible to select a start time and duration. This time interval is common to all the days selected.

The parameters related to this function are the following:

- **P.0418**: allows to specify in which days of week the engine TEST will be performed. It is a bit-configurable parameter; each bit of the parameter corresponds to a day of the week. The value for the parameter is the sum of the “value” (in hexadecimal form) fields in the following table related to the days you are interested in.

Bit	Hexadecimal value	Day
0	01	Sunday
1	02	Monday
2	04	Tuesday
3	08	Wednesday
4	10	Thursday
5	20	Friday
6	40	Saturday

  For example, if you want to perform the TEST only on Monday and Thursday, you must set 12 (10+2).

- **P.0419**: allows to set start time for the TEST (Hours and minutes).
- **P.0420**: allows to configure the TEST duration (in minutes).

P.0420 sets the duration instead of an end test time. This is due to the same parameter being also used for TEST activated by an SMS command.

12.1.2 Working time intervals weekly planning.

In some applications, it is useful to inhibit the automatic intervention of the engine for mains failure in hours or days where the mains is not used. For example, if a factory is closed on Sunday, the engine should never start in this day for mains fault (because it consumes unnecessary fuel). With this function you can select in which days and in which time intervals the gen-set can start automatically. The planning is made on a weekly basis: therefore, it is possible to plan in which days the generator must operate. Besides days, it is possible to set a single auto operation enable time slot common to all selected days.

The parameters related to this function are the following:

- **P.0421**: allows to specify in which days of week the engine can start automatically. It is a bit-configurable parameter; each bit of the parameter corresponds to a day of the week. The value to be set for the parameter is the sum of the value fields (in hexadecimal form) in the following table related to the days needed.

Bit	Hexadecimal value	Day
0	01	Sunday
1	02	Monday
2	04	Tuesday
3	08	Wednesday
4	10	Thursday
5	20	Friday
6	40	Saturday

- **P.0422**: allows to configure the start of the time interval during which the engine can start automatically (in hours and minutes).

- **P.0423**: allows to configure the end of the time interval during which the engine can start automatically (in hours and minutes).

Usually P.0422 will be set to a value lower than P.0423. On the contrary, if it contains a higher value, the controller infers that the time interval is set across midnight: in this case, the time set with P.0422 refers to the days selected with P.0421, while the time set with P.0423 refers to the following days.

For example, in case an automatic gen-set start is required only Monday through Friday, between 08:00 and 18:00, you must set:

- P.0421= 3E (02+04+08+10+20)
- P.0422 = 08:00
- P.0423 = 18:00

12.1.3 Weekly schedule of forced intervention hours.

In some applications, it is required that at certain times and on certain days the intervention of the generator is forced, even if the conditions of the system do not require it (for example, emergency system with mains present). Normally, this function is used in order to not use the power mains in times when its cost is too high. The planning is made on a weekly basis: therefore, it is possible to plan in which days the generator must operate. Besides days, it is possible to set a single auto operation enable time slot common to all selected days. In the selected days, within the time slot, the board switches to "REMOTE START" mode.

The parameters related to this function are the following:

- **P.0426**: allows specifying in which days of the week the automatic intervention of the generator is forced. It is a bit-configurable parameter; each bit of the parameter corresponds to a day of the week. The value to be set for the parameter is the sum of the value fields (in hexadecimal form) in the following table related to the days needed.

Bit	Hexadecimal value	Day
0	01	Sunday
1	02	Monday
2	04	Tuesday
3	08	Wednesday
4	10	Thursday
5	20	Friday
6	40	Saturday

- **P.0427**: allows setting the start time of the slot in which automatic operations are forced, in hours and minutes.
- **P.0428**: allows setting the stop time of the slot in which automatic operations are forced, in hours and minutes.

Usually P.0427 will be set to a value lower than P.0428. On the contrary, if it contains a higher value, the controller infers that the time interval is set across midnight: in this case, the time set with P.0427 refers to the days selected with P.0426, while the time set with P.0428 refers to the following days.

12.2 Thermometer

The controller is provided with a hardware thermometer, for measuring its internal temperature. The temperature is shown at page S.06, multifunction display. It is used for many functions:

- At very low temperatures information display slows down. By using the thermometer when the temperature drops below a threshold (<10° C), the board keeps the backlight lamp on, which helps to warm the display and thus to improve its efficiency.
- The electronic components inside the controller have an extended working temperature range. Despite this, it is possible in critical ambient conditions that temperature goes out of this range. The board uses the thermometer to activate an early warning (at the same time by turning off the lamp of the display which is a source of additional heat) when the room temperature rises above a configurable threshold. This already serves to alert the operator, but it is also possible, by using the bit mapping function of configurable outputs or AND/OR logics, to make sure that, when the early warning is active, an output is also activated, therefore used to activate the cooling mechanisms.
- For diagnostic purposes, the board records maximum and minimum peaks of room temperature, by using the thermometer. This makes a post-examination of working conditions possible, therefore verifying if it is the necessary to add heating/cooling mechanisms to improve operating conditions.

12.3 Counters

The controller manages internally the following counters:

1. Engine starts counter (resettable to zero).
2. Engine running hours counter
3. Engine running hours counter (resettable to zero)
4. Load working time with GCB closed (hours) counter (resettable to zero)
5. Partial engine running hours counter (resettable to zero) with protections OVVERRIDE active.
6. Time to next service (hours) counter

7. Resettable meter for active energy (kWh) measured when the users are connected to the generator (see 10.4): it counts only supplied power, it does not count in the event of power reversal.

8. Total active power meter (kWh), with power measured when the loads are connected to the generator (see 10.4); it measures only the supplied power and does not measure in case of power reverse.

9. Resettable meter for reactive energy (kVarh) measured when the users are connected to the generator (see 10.4): it counts in absolute value.

10. Total reactive power meter (kvarh), with power measured when the loads are connected to the generator (see 10.4): it measures the absolute value.

11. Resettable meter for active energy (kWh) measured when the users are connected to the mains (see 10.4).

12. Total active power meter (kWh), with power measured when the loads are connected to the mains (see 10.4)

13. Resettable meter for reactive energy (kVarh) measured when the users are connected to the mains (see 10.4): it counts in absolute value.

14. Total reactive power meter (kvarh), with power measured when the loads are connected to the main (see 10.4): it measures the absolute value.

15. Controller total power supply time (hours) counter

Almost all these counters and meters are displayed on the controller's front panel (only the total supply time counter is not displayed). However, all can be read via the serial port (with the ModBus protocol). Some of these counters can be reset by the operator following a proper procedure, or via the serial port (they are marked in the list with “resettable to zero”). All these counters are saved in a non-volatile memory; therefore they store their values also when the controller is powered off. Since non-volatile memories have a very large, but not infinite, number of records, it is necessary to reduce writing operations to a minimum. Therefore, a counter may not be immediately saved as its value changes; consequently, before powering the controller off, ensure to know when and how the counters were saved.

Counters are saved (all together and in the same time) in the following conditions:

- Immediately after each engine start (with engine running, not after each start attempt).
- Immediately after each engine stop (when controller acknowledges the engine stopped status, not when stop is requested).
- After each engine running hours counter increase (total, also if the engine has been started for instance six times for ten minutes each time).
- After each total engine running hours counter increase (total, also if the engine has been started for instance six times for ten minutes each time).
- Each time the load engine working hours counter is increased (total, also if the engine has been started for instance six times for ten minutes each time).
- Each time the working hours counter with engine protections OVVERRIDE active is increased (total, also if the engine has been started for instance six times for ten minutes each time).
- Every time the controller is set to OFF/RESET.
- For each hour the controller is powered.
- When parameter P.0424 is changed (maintenance interval).

Furthermore, counters are saved when they are reset to zero (individually or globally) via front panel or serial port. Note that some counters have a decimal part (for example the minutes-counters associated to hours-counters), which is also saved in a non-volatile memory. Powering off the controller in an uncontrolled way can cause the loss of the decimal part. It is enough to switch the controller to OFF-RESET to force data saving, before switching off the power.

12.3.1 Counters reset

See the description of M.06 (6.3.7.6), M.07 (6.3.7.7), E.03 (6.3.9.3) pages.

12.4 Gen-set lock

A command inhibiting gen-set operation can be sent to the controller either through a PC's serial port or a SMS. The locked gen-set can be re-activated either through a PC's serial port or a SMS (powering the controller Off will not work). The controller signals the inhibition status by activating the alarm AA012.

12.5 Loads protection from mains breaker damages

Please refer to the document [4] that details this function.

12.6 Load thresholds

The function in hand should not be mistaken for the “load management” available in parallel systems, whose description is indicated within the document [4].

This function allows to monitor the trend of the active power in order to diagnose:

- A low power condition.
- A high power condition, to disconnect part of the loads, if needed.

It is necessary to choose a priori the condition to be monitored (using the P.0481 parameter: set it to zero to select the low power monitoring, set it to one to select the high power monitoring).

To associate an output to this function, the code DOF.0004 - "load thresholds" must be configured in the parameter P.0581 parameter (or equivalents). If no output is configured in this way, the function will not work.

It is possible to enable this function through a digital input configured by means of DIF.0075 function - “Enable load thresholds”: if the input exists, the function will be enabled when the input is activated. If the function is disabled, the output configured through DOF.0004 function will be always disabled.

Function is configured with the following parameters:

- P.482: initial observation delay If the enabling input exists (DIF.0075), during the first P.0482 seconds starting from the input activation, the board will control the output at rest: this happens to allow time to the system for stabilizing before starting to control the power.
- P.0483: lower threshold (percentage of the rated power P.0125).
- P.0484: delay associated to the lower threshold (in seconds).
- P.0485: higher threshold (percentage of the rated power P.0125).
- P.0486: delay associated to the higher threshold (in seconds).

If the thresholds P.0483 and P.0485 are set to zero or are not congruent, the function will be disabled. The function is disabled also in case current transformers are connected to the users and the users are not connected to the generator (GCB open) (see 10.4).

12.6.1 Low power

Aim of this function is to diagnose a low power (or low load) status and point it out by means of a digital output of the board: in a situation of more than one generators in parallel, this output could be used to deactivate some generators, even if the “load management” (see [4]) allows to do the same but in a cleverer way.

The controller watches the total active power delivered, comparing it with two thresholds (so setting a hysteresis band): the output is activated (signaling the low power condition) if the power drops below the lower threshold for the set time. In the same way, the output is disabled if the power rises above the upper threshold for the set time.

12.6.2 High power

Purpose of this function is to diagnose a high power status (high load) to disconnect part of the less important loads. The controller watches the total active power delivered, comparing it with two thresholds (so setting a hysteresis band): the output is disabled if the power remains below the lower threshold for the set time. In the same way, the output is enabled if the power rises above the upper threshold for the set time. The output is activated in a maximum power condition, and can directly be used as control for disconnecting loads. Ensure to pay attention to the thresholds: when a part of the loads is disconnected, the power will decrease. If the lower threshold is too high, the output will be disabled, and this could cause the load to be reconnected, with a pendulum effect.

12.7 EJP function

Warning: HT GCxxx is unable to directly track EJP information from the mains. In order to use this function, an external detector should be used. This detector must provide two output signals coherent with said function.

The EJP function allows to start the engine and warm it before mains failure, so when it will happen, loads can be immediately changed-over on gen-set, reducing to the minimum the time the loads remain unsupplied.

The system is based on two signals, available through the mains provider:

A. A signal activated well in advance with respect to the mains failure (e.g. approx 30 mins).

B. A signal activated just before mains failure.

We want to start the engine in (a settable) advance in relation to signal B; however, the load must be taken only when B is active. The controller can perform this operation following the steps below:

- A and B signals must remain active until mains reactivates.
- Both signals must be connected to relays with exchanging contacts.
- The time between A and B signals activation must be known.

To use this function the controller has to be configured in the following way:

- Configure a digital input with feature DIF.0027 – “Remote start request” (in parameter P.0507 or the equivalents). In addition, this input requires configuring the engine startup delay (in seconds, in the parameter P.0508 or equivalent), since A activates. If, for example, we want to warm the engine for five minutes and the A signal will activate 30 minutes before B, it will require to set 1500 seconds, i.e. 25 minutes (it is possible to set delays up to 4000 seconds, i.e. 66 minutes).

- Set up a digital input with DIF.0030 "Inhibition to power load" function (in P.0507 parameter or equivalent ones).

Then connect the NO contact of signal A to first configured input and the contact **NC** of signal B to second input.

When both signals are inactive, the controller does not receive the remote start request and remains at rest in AUTO mode. The "inhibition of supply" contact is skipped.

When signal A activates, both controller inputs will be active. The controller will not immediately shift to REMOTE START mode, but will do only after the time set in P.0508 (or equivalents) is elapsed. So, also in this phase the inhibition of supply is skipped. In this phase, window S.01 shows the remaining time to startup.

After the time since activation of signal A, the controller shifts to REMOTE START mode and performs the engine start. In this phase, the inhibition of supply input is no longer skipped, and being it active (connected on contact NC), it will prevent the loads change-over on gen-set.

When signal B activates, the inhibition of supply input deactivates, allowing the load change-over on gen-set.

When the mains is on, both signals A and B deactivate. Therefore, the controller reverts to AUTO mode, due to mains on, performs the engine stop (with cooling cycle).

12.8 PICO function

This function is available from 1.28 firmware version. In some areas of the world, at certain times of the day, the supply from the mains has a huge cost. This function allows using the generator to supply users in a given time slot (week calendar setting).

For this function, it is preferable (but not mandatory) to use the HT GC5xx boards: if it is possible to manage the parallel with the mains, they avoid causing a black-outs to users when switching from mains to generator and vice versa. The description below refers to **HT GC5xx** boards.

Basically, within set days and time slots, HT GC5xx should start the generator and put it in parallel with the mains. When in parallel, it should transfer the power absorbed by the users from the mains to the generator, then it should open the mains switch. The parallel with the mains should have a maximum configurable duration: elapsed this time, MCB switch should be opened. At the end of the time slot, HT GC5xx puts back the group in parallel with the mains, transfers users' power from the generator to the mains, opens GCB switch and stops the generator. Also in this case the duration of the parallel with the mains should be limited.

HT GC5xx should then (but it is not mandatory) be able to measure the power on the interchange point with the mains. It is possible to use an external tool to perform this measurement, and connect it to an analogue input of HT GC5xx (P.0885 parameter or AIF.2303 function in P.4001 parameters or equivalent ones). Alternatively, it is possible to use the fourth current transformer of HT GC5xx to perform this measurement. In this case set:

- P.0126 = 1 (mains/bars sensor used to measure the mains).
- P.0109 = 1 (it uses a current transformer for the fourth current).
- P.0108 = x (current transformer primary).
- P.0130 = 2 (current transformer connected on L1 phase of the mains).
- P.0131 = 4 (fourth current used to calculate the power on the mains).

After this, the board calculates power on phase L1 of the mains and, for three-phase systems, it multiplies it by three, therefore assuming a balanced load. This value is then multiplied by P.0132 coefficient (default 1.0), which allows correcting load imbalances.

To activate the "load transfer" function from the generators to the mains, it is necessary to configure a digital input with DIF.2096 function: this input should be active. Moreover:

- If the board is able to measure the power on the mains, the "import/export" mode should selected for the parallel with the mains (P.0880 = 2) and select "0 kW" (P.0888) as power on the interchange point.
- Alternatively, select "BASE LOAD" mode for the parallel with the mains (P.0880 = 1) and set alleged users' power in P.0884.

See document [4], that describes the "transfer to the generators" function in details.

Use P.0426, P.0427 and P.0428 parameters to select the time slot during which the intervention of the generator should be forced (see description in 12.1.3).

The maximum time that the generator can stay in parallel with the mains is generally decided by the Supplier of the power mains; it can be set with P.0890 "Maximum time in parallel with the mains" parameter. By leaving the parameter to zero, no limitation is set on the duration of the parallel to mains.

12.9 Speed control

For HT GC5xx boards, see document [4].

HT GC3XX boards are capable of controlling engine speed only when connected to it via CAN0 CAN-BUS line. It is possible to change engine speed by setting P.0702 parameter.

It is however also possible to use two digital inputs (UP/DOWN) to change engine speed:

- DIF.0085: "increase speed".
- DIF.0086: "reduce speed".

When the engine is running, the board increases engine speed if the input configured with DIF.0085 function is configured, and decreases it if the input configured with DIF.0086 function is active. If no input is active, the speed control remains unchanged. Each time the engine is stopped, the speed control is set back to what determined with P.0702 parameter. The pace at which the speed is increased/decreased is configurable with P.0712 parameter: it indicates the change of speed reference per second (if UP input remains active for a second, the speed reference will be increased by this percentage).

12.10 Serial ports

HT GC310 has only one standard serial port, HT GC350, and HT GC5xx have two standard independent serial ports. They both support Modbus protocol. To configure the ports, the following parameters are used:

Function	Settings for serial port 1	Settings for serial port 2
Modbus address	P.0452	P.0472
Baud Rate	P.0453	P.0473
Settings (no. of bits, parity, stop bits)	P.0454	P.0474
MODBUS registers order	P.0470	P.0475

P.0470 and P.0475 parameters specify how the information at 32 is broken down to 16-bit registers provided for by Modbus:

- 0-LSWf: by transferring information at 32-bit, the lowest-index Modbus register will contain the lowest 16 bits of information.
- 1-MSWf: by transferring information at 32-bit, the lowest-index Modbus register will contain the highest 16 bits of information.

See the document[8] for a description of these parameters.

12.11 CAN-BUS connection with engines

HT GCxxx has a CAN-BUS interface dedicated to the interfacing with electronic engines (CAN0). Please refer to documents [12] [13] for detailed information. To activate the connection, first of all, it is necessary to select the kind of engine through P.0700 parameter (among the list of allowed engines). Then, it is possible to decide whether only to receive information from the ECU of the engine or also send controls (P.0703, detailed in the above-mentioned documents): by setting P.0703 on “0”, HT GCxxx doesn't transmit anything on the CAN-BUS. In the end it is possible to set a time-limit through P.0711 parameter: HT GCxxx will activate an anomaly in case it doesn't receive messages from the ECU of the engine within this period of time.

Only for some engines, it is possible to specify the value in rpm for low speed (P.0710), and it is possible to start the DROOP mode directly in the ECU of the engine (P.0708). Finally, for SCANIA engine only, it is possible to indicate atmospheric pressure to the engine using P.0705 parameter.

12.12 Report of faults (HT GC350, HT GC500, HT GC500*Plus*)

It is possible to configure one of the outputs from 5 to 14 with DOF.0041 "Device failure" function. The output configured in this way is always active: it becomes non active only in case of failure of the board. It can therefore be used to indicate a fault.

12.13 Expansion modules

The board is able to handle expansion modules, linking them to the CAN-BUS interfaces. HT GC3XX boards have a single CAN-BUS interface (CAN0 - engine) and then expansion modules can only be connected to them. Instead HT GC5xx boards have two CAN-BUS interfaces: use P.0140 parameter to configure on which interface expansion modules are connected.

- P.0140 =0: modules connected to CAN-BUS 0 (engine).
- P.0140 =1: modules connected to CAN-BUS 1 (PMCB).

If possible, always connect the modules to CAN0 CAN-BUS (engine). The only case when this is not possible, is when a MTU engine with MDEC control unit is connected to CAN0 (140 ... 143 values in P.0700 parameter).

If the modules are connected to CAN1 CAN-BUS it is anyway necessary to use external CANBRIDGE modules to separate the boards connected on PMCB bus (otherwise each board would "see" the expansion modules of the others as well).

It is possible to connect the following additional optional modules:

- Two modules to measure temperatures (for a total of six measurements). It is possible to use DITHERM or DIGRIN modules, that can be mixed in any ways.
    - DITHERM module: acquires up to three thermocouples (galvanically insulated inputs).
    - DIGRIN module: acquires up to three Pt100 probes (galvanically insulated inputs).
- A DIVIT module: it acquires up to four sizes 0...5V / 0...10V / 0...10mA / 0...20mA (galvanic isolated inputs).
- A DANOUT module: controls up to four analogue outputs 0...5V / 0...10V / 0...10mA / 0...20mA (galvanic isolated inputs).

- A DITEL 16IN module: acquires up to sixteen opto isolated digital inputs. To DITEL 16IN module it is possible to connect two DITEL 8 OUT relay modules (for a total of 16 digital outputs). You cannot use the output modules without a related input module.

Below we use the name DITEMP to refer to a temperature measurement module (DITHERM or DIGRIN).

To configure the modules on the HT GCxxx, it is necessary to set the number of modules available with the parameters

- P.0141 the number of DITEL 16IN modules (with any DITEL 8OUT module) (maximum 1).
- P.0142 the number of DITEMP modules (i.e. DITHERM or DIGRIN) (maximum 2).
- P.0143: the number of DIVIT modules (maximum 1).
- P.0144: the number of DANOUT modules (maximum 2).

Once the presence of the modules is configured, they appear as analogue or digital inputs or outputs and are managed as the native ones of the board. For the related parameters see the documents [1] and [2]. In BoardPrg3, once the presence of a module is configured, it appears in the I/O menu on the left column, with each individual input/output ready to be configured.

For the configurations to be made on the modules, refer to their user manuals. But it is necessary to make a statement as to DIVIT module. It is capable of measuring anything: it is necessary to convert the performed measurement (Volt or mA) into the real unit of measurement of the acquired dimensions. This conversion can be made directly in the module (DIVIT) or on HT GCxxx. **Beware not to have a double conversion.**

SICES advises to:

- Configure DIVIT module to transmit a percentage value. In the example below, a channel configured to acquire a signal 0-10 mA, will transmit “0” at 0 mA and “100” at 10 mA.

ID	Descrizione	U.M.	Nel dispositivo	Nel PC
P.0101	Sensore 1 - Tipo ingresso	-		1-0/10 mA
I1_SO1	Ingresso 1 - Valore 1 in ingresso (mA/V)	mA/V		0,000
I1_DE1	Ingresso 1 - Valore 1 corrispondente trasmesso	-		0,0
I1_SO2	Ingresso 1 - Valore 2 in ingresso (mA/V)	mA/V		10,000
I1_DE2	Ingresso 1 - Valore 2 corrispondente trasmesso	-		100,0

- On HT GCxxx, use a conversion curve to convert from a % value to the actual standard of measurement.

12.14 Non-volatile memory

The controller has a non-volatile memory inside, used to store various information such as parameters, counters etc. The memory is subdivided into various areas. When the controller is powered, it performs a check on the data stored in each area: if even just one area is incorrect, it displays an error message. Said message contains a numerical code (in hexadecimal form); each bit to 1 of said code corresponds to an area of the memory that is not valid. Here is a table listing the areas and their bit.

HT GC3XX

Area	Hexadecimal value	Description
1	0001	Coefficients for the calibration of the measuring inputs of the controller.
2	0002	Various information (language selected, lcd display contrast, maintenance request).
3	0004	Counters
4	0008	History log for diagnose codes acquired via CAN-BUS from the engine.
5	0010	Calibration coefficient of the fuel level analogue sensor.

6	0020	History log of the maximum peaks.
7	0040	Parameters alternative configurations.
8	0080	Parameter:
9	0100	Parameters (for expansion modules).
10	0200	Parameters (for expansion modules).

HT GC5xx

Area	Hexadecimal value	Description
1	0001	Coefficients for the calibration of the measuring inputs of the controller.
2	0002	Various information (language selected, lcd display contrast, maintenance request).
3	0004	Counters
4	0008	History log for diagnose codes acquired via CAN-BUS from the engine.
5	0010	Calibration coefficient of the fuel level analogue sensor.
6	0020	History log of the maximum peaks.
7	0040	Parameters alternative configurations.
8	0080	Parameter:
9	0100	Parallel with the mains protections triggering/reset records.
10	0200	Parameters (for expansion modules).
11	0400	Parameters (for expansion modules).

If, for example, the value between brackets is “0004”, it means that only the counters area is not valid. If the value is “0082”, it means that the parameters areas (0080) and the Current language area (0002) are not valid.

If any of the areas is not valid, the normal operating sequences are not carried out until the operator presses the “ENTER + EXIT” buttons: in fact, the situation must be taken note of, because it may cause malfunctions (for example, imagine what would happen if the invalid area were the one of the parameters) Only when the operator presses “ENTER + EXIT” the controller reloads the default settings for the data stored in the invalid areas: it means that, in the event the controller is shut off without pressing “ENTER + EXIT”, next time you turn it on you will get again the invalid memory report.

This document is owned by S.I.C.E.S. S.r.l. All rights reserved. S.I.C.E.S. S.r.l. reserves the right to modify this document without prior notice.

S.I.C.E.S. S.r.l. has made any effort to ensure that the information herein provide are correct; in any case Huegli-Tech AG does not assume any liability for the use these information.

Huegli Tech AG (LTD)
4900 Langenthal Switzerland
Phone: +41(0)629165030
Fax: +41(0)629165035
e-mail: support@huegli-tech.com
web: www.huegli-tech.com



A product powered by:

S.I.C.E.S. S.r.l.

www.sices.eu