TM-QUICKSAND

OPERATION AND MAINTENANCE OF SOUND SUPPRESSOR MODEL QUICKSAND

Before using this suppressor, be certain you have read and understand this manual.

Manufactured by

GEMTECH
Div. of Gemini Technologies, Inc.
P.O. Box 140618
Boise, Idaho 83714

ISSUED: October 16, 2013

WARNING

☞**Because sound suppressed weapons make less noise than non-suppressed weapons, it is easy to forget that they are still firearms. It is of vital importance to remember that a sound suppressed firearm is just as dangerous as a non-suppressed one, and the same safe handling requirements apply.**

TM-QUICKSAND

FIRST EDITION	November 2010
SECOND EDITION	August 2011
THIRD EDITION	October 2013

Published by:

ATI Star Press
Antares Technologies, Inc.
P.O. Box 140618
Boise, Idaho 83714
Phone: (208) 938-2173

Illustration p. 9 drawn for Gemtech by Michael L. Smith

COPYRIGHT NOTICE:

©2013 Gemini Technologies, Inc.
All rights reserved. The contents of this publication may not be reproduced in any form or by any means in whole or in part without the prior written permission of the copyright owner.

TM-QUICKSAND

OPERATIONAL MANUAL FOR
SOUND SUPPRESSOR MODEL
QUICKSAND (7.62 mm NATO)

Manufactured by

GEMTECH
Division of Gemini Technologies, Inc.
P.O. Box 140618
Boise, Idaho 83714-0618

Phone: (208) 939-7222
FAX: (208) 939-7804

CONTENTS:

General Description ..... P. 2
Effectiveness and Ablative Warning ..... P. 3
Safety Notes ..... P. 4
Physical Specifications ..... P. 4
Ammunition Recommendations ..... P. 5
Bi-Lock Mount Installation ..... P. 6 & 7
Suppressor Mounting/Dismounting ..... P. 8
Maintenance and Cleaning ..... P. 10
Mount Disassembly and Service ..... P. 11
Warranty Statement ..... P. 12
Point of Impact Shift Issues ..... P. 13

✯✯ ✯ ✯ ✯ WARNING ✯✯ ✯ ✯ ✯

☞ **Failure to follow installation and maintenance instructions detailed in this manual can result in potential for serious injury to the user and damage to the weapon.** Firearm sound suppressors are user attached firearm muzzle devices, and as such are subject to improper attachment unless the proper procedures outlined in this manual are followed.

MANUFACTURER'S DISCLAIMER

The manufacturer is not responsible for improper usage of this product. This product is potentially dangerous, and as such it is the user's responsibility to understand and implement its proper use. If you do not understand the instructions in this manual, please contact the manufacturer for further clarification.

GENERAL DESCRIPTION

Congratulations! You have just purchased one of the most efficient and versatile centerfire rifle sound suppressors made. Please take a few minutes to read this instruction manual and keep it in a safe and convenient place. Designed for the 7.62x51 NATO cartridge, it is usable with any .30 caliber cartridge of similar case capacity.

The model QUICKSAND sound suppressor is offered only in the Quik-Mount configuration, a secure and accurate quick-detach mounting system. It is fast to operate and has no flash hider threads to gum up or be damaged in the field. There are no gates or parts to break. The Quik-Mount system is compatible with the older Bi-Lock™ mounts having two lateral projecting lugs for coupling.

All muzzle attachments, including suppressors, will change barrel harmonics and standing waves, which may result in a slight change in point of impact with the device in place. The QUICKSAND suppressor and mount combination has been carefully engineered to provide a consistent, repeatable, and predictable shift in point of impact. This is discussed further on page 15 of this manual. When used with standard weight law enforcement or military grade barrels, the QUICKSAND suppressor will have no deleterious effect on group size.

This suppressor is effective in markedly reducing the sound of the muzzle blast, making it difficult for an observer to determine the origin of the shot and eliminating the need for shooter hearing protection. There is no way of eliminating the ballistic crack (or sonic boom) of the projectile traveling downrange.

This suppressor contains no expendable parts. We recommend against cleaning the interior of the suppressor. This instruction manual gives the necessary instructions for maintenance of this unit.

USE OF ABLATIVE AGENTS (ARTIFICIAL ENVIRONMENT)

Do not fire this suppressor with any foreign material inside. This suppressor is designed to operate completely dry. Introduction of liquids, greases, or other foreign materials can cause abnormal pressures and must **never** be used. Any resultant damage is not covered under warranty.

OVERALL EFFECTIVENESS

The real limiting factor on the effectiveness of centerfire rifle suppressors is related to the sound of the bullet in free flight. The free flight bullet noise is related to the general bullet shape and is also directly proportional to the bullet velocity. The QUICKSAND suppressor is capable of reducing the sound of the muzzle blast to the vicinity of bullet and action noise levels. Because of the sound level of the bullet in flight, it is not possible to truly appreciate the degree of reduction when the muzzle blast is reduced to less than the bullet flight noise. Because of the frequency multiplication and spectrum shift capabilities of the QUICKSAND suppressor, the muzzle blast is reduced and masked by the bullet flight noise.

Besides sound suppression, there are two additional added benefits of a sound suppressor, which are seldom mentioned. The first is that a sound suppressor is also an exceptionally effective recoil reducer, often reducing recoil to less than one fourth of its original magnitude. The second is that a sound suppressor is an exceptionally effective flash suppressor, and when using a night vision device as a sight, the use of an efficient sound suppressor is almost mandatory to keep the flash from causing “blooming” on the viewing screen of certain variations of night vision devices.

The added weight of the suppressor on the barrel changes barrel vibrations, which usually improves grouping. The extra weight will alter the point of impact slightly as compared to the non-suppressed weapon. However, because of the design of the mounting system, point of impact shift is consistent and predictable.

SAFETY NOTES

1. Always handle weapons in a safe manner and assume they are loaded until they have been cleared.
2. User installation or removal of the sound suppressor must be accomplished in accordance with the instructions contained in this book.
3. Any installation, or removal of the Bi-Lock Compensator mounting system must be accomplished by a qualified armorer in accordance with the instructions contained in this book.
4. Serious injury to the user may result from an improperly installed Bi-Lock Muzzle Brake and/or suppressor.
5. **Operating Temperatures:** During use, the QUICKSAND suppressor absorbs large quantities of heat from the burning propellant gases. This heat is dissipated by radiation, convection, and conduction. The heat buildup is particularly noticeable during fully automatic fire, where the temperature of the suppressor can easily exceed 900°F in a short period of time. **The elevated temperatures can pose a hazard to personnel and materials that may contact the suppressor when hot, and the suppressor must be allowed to cool to ambient temperature before handling.**
6. **Only use the suppressor completely dry.**

SPECIFICATIONS

Caliber:	7.62 NATO and similar
Length:	9.2 inches
Diameter:	1.5 in.
Weight:	17 ounces
Materials:	High tensile strength titanium alloys
Finish:	Natural, non-reflective
Minimum barrel length:	16 inches

☆☆☆☆☆ WARNING ☆☆☆☆☆

☞This suppressor is not intended for fully automatic fire. With fully automatic fire, heat buildup within the suppressor can reach levels that can cause severe burns and can ignite flammable materials. Because the suppressor becomes very hot during use, care must be used to prevent burns when touching or removing a hot suppressor.

AMMUNITION

For all of our centerfire rifle suppressors it is recommended that only full metal jacketed, factory loaded hunting ammunition, or specific match-grade bullets be used. Some of the highly frangible jacketed bullets used in reloading ammunition have a tendency to have jacket separation, which is why we recommend the use of full metal jacketed bullets with the suppressor. Jacket separation will cause the bullet to tumble while in the suppressor which can seriously damage the internal baffles and lead to suppressor failure. Because of this, damage caused by use of any bullet other than the above **will not be covered under warranty if there is jacket separation.**

There has been a move toward the use of specially loaded .308 (7.62x51mm) subsonic ammunition to eliminate the ballistic crack of the projectile traveling faster than the speed of sound. Unfortunately, the majority of subsonic .308 ammunition is loaded with heavy, boat-tail projectiles which do not stabilize adequately in the twist rate of virtually all .30 caliber rifles. These projectiles, which may give a decent group at 50 meters, will yaw significantly during the first 10-15 meters in front of the muzzle, including within the suppressor. **Because of the potential for suppressor damage with subsonic ammunition, Gemtech will not warrant damage caused by subsonic ammunition not approved by us.** Specifically, we recommend against the use of Lapua, IMI, and other .308 subsonic ammunition loaded using boat-tail projectiles. At the time of printing of this manual, only Engel Ballistic Research subsonic ammunition meets Gemtech warranty specifications.

An excellent alternative for subsonic .30 caliber ammunition is the .300 Blackout or .300 Whisper cartridge. There are a number of weapons chambered for this new round, and semi- or full-automattic weapons chambered for this round will cycle normally.

✯ ✯ ✯ ✯ ✯ WARNING ✯ ✯ ✯ ✯ ✯

☞ **Failure to follow installation instructions detailed in this manual can result in potential for serious injury to the user and damage to the weapon.**

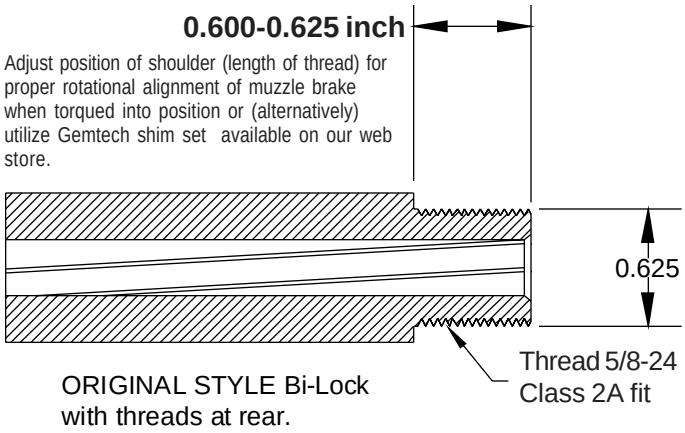

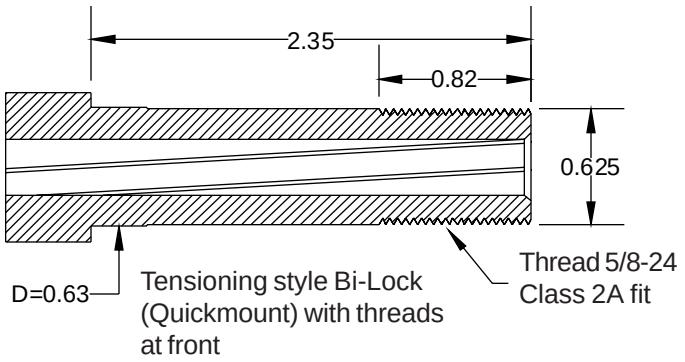

BARREL MUZZLE THREADING

INSTALLATION OF BI-LOCK MOUNT

This suppressor is attached to the rifle with ease on a standard sized, proprietary Bi-Lock mount. Proper alignment and mounting of the suppressor is dependent on the care and precision used during installation of the Bi-Lock mount.

1. The Bi-Lock mount attaches to threads on the muzzle of the rifle. Unless specially ordered otherwise, the Bi-Lock mount is supplied to mount on 5/8-24 NEF Class 2A threads. Our experience has shown that threads smaller than 5/8 inch are more likely to stress relieve the muzzle of the weapon, introducing inaccuracy. We recommend cutting barrels to no less than 18 inches.

2. Thread the muzzle of the rifle as specified in Fig 1 (P.6) for the Bi-Lock used with 5/8x24 threads (Class 2A fit). For proper alignment, it is essential that the threads be absolutely concentric with the bore of the weapon and that there is a sharp shoulder at the rear of the threads that is 90 degrees to the bore axis. Barrel threading must be performed on a lathe with the barrel turned between centers. The barrel threading procedure is critical, and errors will result in misalignment. (See drawing P. 6). Gemtech can thread the barrel, properly install the Bi-Lock™ mount, and gauge the installation for a nominal fee.

3. Some hand fitting may be necessary for cosmetic purposes only if having the locking lugs in any particular orientation is considered desirable. Orientation of the lugs makes no functional difference. There are several methods of achieving this orientation.

   a) The simplest is to trim the 90 degree shoulder area on the barrel while in the lathe so that when torqued on, the Bi-Lock™ mount will be oriented as desired.

   b) The second method is to custom cut a stainless steel compression washer to act as a shim. If using this method, it is important that the washer be fabricated with both sides parallel. This can affect group size as a function of barrel temperature. We recommend the Gemtech shim set available on our web store.

   c) We suggest against trying to trim the back of the Bi-Lock™ mount to achieve cosmetic fit.

4. Whichever method of insuring rotational position is utilized, proper orientation must allow for torquing the Bi-Lock™ into final position. We have found that the process of final tightening will rotate the Bi-Lock™ an additional 15-20 degrees.

5. Thread Adhesives: For auto-loading weapons, Rocksett is the preferred adhesive having a higher temperature rating. For bolt action weapons, Loctite® 242 is acceptable.

6. Degrease all surfaces with acetone. Apply the spacing shim (if used) and the appropriate thread adhesive. Screw on the Bi-Lock™ mount.

7. Using a torque wrench, torque the Bi-Lock ™ mount into position utilizing between 30 and 40 ft-lbs. Allow the thread adhesive to set up for at least 72 hours before use.

☆☆☆☆☆ **DANGER** ☆☆☆☆☆

☞ **Before performing any installation or maintenance operation, always remove the magazine from the firearm, open the action, and visually ascertain that the chamber is empty and the weapon unloaded. Failure to do so can result in potential for serious injury to the user and others in the vicinity.**

SUPPRESSOR MOUNTING/DISMOUNTING

Mounting: Mounting of the suppressor on the Bi-Lock™ mount can be performed in less than 5 seconds. (See drawing P. 9 opposite.)

1. Place the base of the suppressor onto the Bi-Lock™ mount.

2. Rotate the suppressor until the lugs on the Bi-Lock™ mount enter the base of the suppressor. This can occur in only one position.

3. Press the suppressor onto the Bi-Lock™ mount against spring tension approximately 0.2 inch until the suppressor can be rotated on the Bi-Lock Compensator.

4. Rotate the suppressor 90 degrees counterclockwise (with reference to the operator's viewpoint) until the Bi-Lock™ mount lugs engage in recesses in suppressor mount. Internal stops prevent over-rotation. The suppressor will snap forward approximately 0.1 inch when engaged. Gently attempt to twist the suppressor to be certain it is locked in position. *The lugs must engage the locking recesses in the mount closer plate before use.*

Quickmount suppressor installation on Bi-Lock equipped weapons.

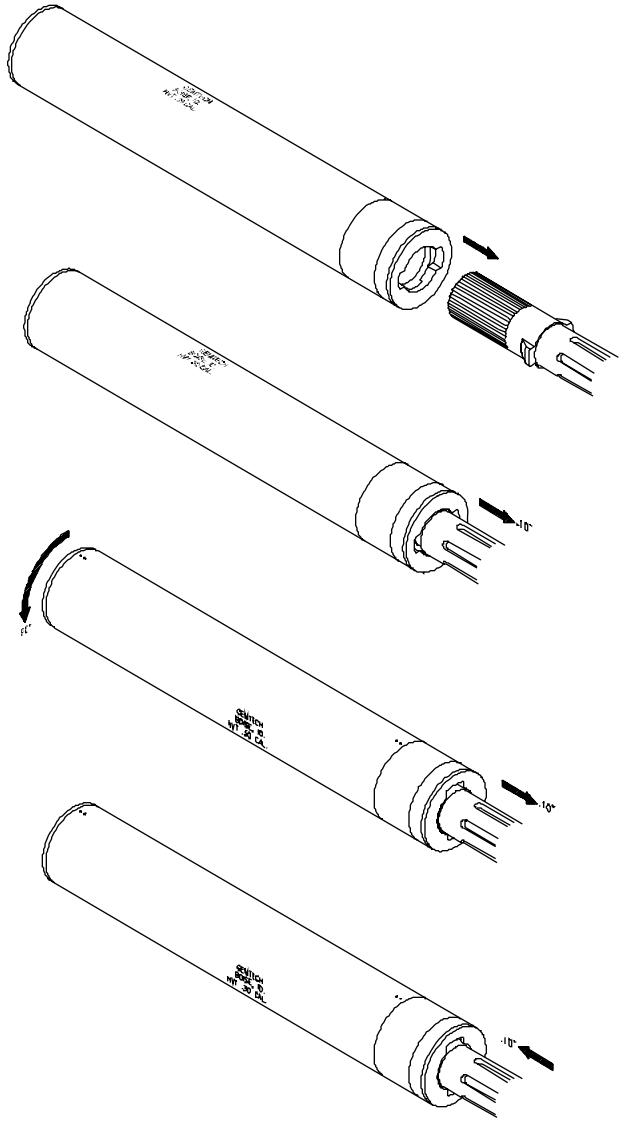

Drawn1998 Michael L. Smith
Date: 09/03/98 Filename: TRUNST.dwg
Gemini Technologies, Inc.
Boise, Idaho

Dismounting: Dismounting is the reverse of mounting.

1. The suppressor will become dangerously hot with usage. If the suppressor must be dismounted when hot, a protective glove, such as Nomex, must be worn.
2. Move the suppressor rearward on the Bi-Lock™ mount approximately 0.1 inch until it can be rotated.
3. Rotate the suppressor approximately 90 degrees clockwise (with respect to the operator's viewpoint).
4. Pull the suppressor forward clear of the weapon. Carbon buildup on the Bi-Lock™ mount can be broken loose by twisting the suppressor during removal after the mount has cleared the Bi-Lock™ mount lugs.

☆☆☆☆☆ **CAUTION** ☆☆☆☆☆

☞ **Always read the warning label on any cleaner or solvent, and remember that virtually all solvents are inherently dangerous and potentially toxic. Always use adequate ventilation and both skin and eye protection when using organic solvents and avoid open flames.**

CLEANING

The QUICKSAND suppressor is constructed of 100% titanium parts. As such, there is no real concern about corrosion from the products of combustion of the propellant gases. We have found no need for frequent or compulsive cleaning, and we strongly recommend against attampts to clean the inside of the suppressor.

Suppressors are distinctly different from firearms. Where firearms do require periodic service, suppressors (like most other accesories) are more apt to be damaged by cleaning.

We do not encourage cleaning because it is not necessary. Over many tens of thousands of rounds, there is little carbon build-up, primarily because the high flame temperature burns it off. There is no lead build-up provided cast bullets are not used.

The only portion of the suppressor which should be cleaned is the mount. The inside of the mount (which receives the body of the flash hider) should be periodically scrubbed lightly with a bronze brush dipped in solvent. Suitable brushes resemble toothbrushes built with brass/bronze bristles.

Although no cleaning solution is perfect, we recommend a home-made solution referred to as "Ed's Red." This consists of equal parts of Automatic Transmission Fluid (Type A), mineral spirits, odorless kerosene, and acetone. Because the Acetone evaporates quickly, the solution should be stored in a sealed container. A simpler version is a 2:1 mixture of mineral spirits and automatic transmission fluid

Ultrasonic cleaners are not effective with hydrocarbon-based solutions. Water based cleaners are not recommended.

The suppressor must be blown dry with a source of compressed air so there is absolutely no residual moisture in the suppressor. **Firing with liquid remaining in the suppressor can result in abnormal and erratic internal pressures.** Any damage resulting is the user's responsibility and not covered under warranty.

NOTICE

If hunting with a suppressor is desired, consult your local state Fish & Game Department, as not all states permit hunting with a suppressor.

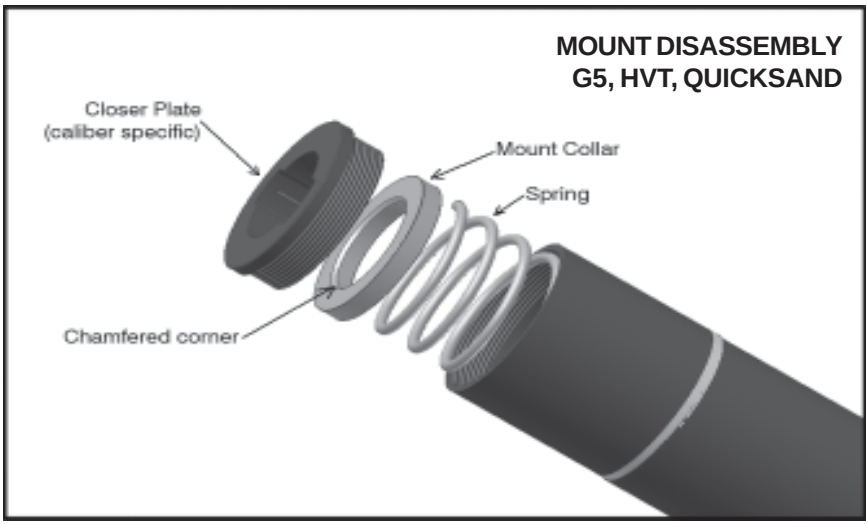

WARRANTY STATEMENT

Our "warranty" has been practiced since our personnel started in the suppressor business in 1976, in a time before legalese and when a hand-shake and this simple statement sufficed: "If a Gemtech product breaks and it's your fault, we'll fix it for a fair price in a timely manner. If it's our fault, we'll fix it quickly at no charge." This policy born of pride in craftsmanship and honor has served us and our clients well for over two decades and will continue in Gemtech's future.

The small print follows:

The Magnuson-Moss Act (Public Law 93-637) does not require any seller or manufacturer of a consumer product to give a written warranty. It does provide that if a written warranty is given, it must be designated at “full” or as “limited” and sets minimum standards for a “full” warranty.

As do most major firearms manufacturers, Gemtech has elected not to provide any written warranty, either “limited” or “full,” rather than to attempt to comply with the provisions of the Magnuson-Moss Act and the regulations issued thereunder.

There are certain implied warranties under state law with respect to sales of consumer goods. As the extent and interpretation of these implied warranties varies from state to state, you should refer to your state statutes.

Gemtech certifies that all sound suppressors manufactured by them are free of defects in materials or workmanship, and that they meet manufacturing specifications at the time of manufacture.

It is our intent that the customer be completely satisfied with the product. Certain Gemtech products may be classified as ordnance and/or implements of war and are sold by us with the specific understanding that Gemtech has taken every reasonable precaution in providing our customers with inherently safe merchandise, and that we assume no liability whatsoever for unsafe handling by the purchaser or his agents. Gemtech assumes no responsibility whatsoever and we will honor no claims for damages, regardless of nature, for physical injury or property damage resulting from careless and/or irresponsible handling, adjustments to equipment, neglect or abuse.

Gemtech reserves the right to make changes at any time and without notice, in prices, to change specification or design, to add or remove accessory materials, and to add or delete items without incurring any obligation.

Warranties specifically apply only to defects in materials or workmanship. They do not cover misuse by the user, damage due to failure to follow instructions in the manual, use of inappropriate ammunition, or improper mounting.

Use of ammunition that does not meet SAAMI specifications will void all warranties.

REPAIR POLICY

Gemtech maintains complete repair facilities for all suppressors manufactured by them. Return authorization and shipping instructions must be obtained prior to return. Contact Gemtech for this information.

ATF no longer requires transfer on a Form 5 to the manufacturer for repair. However, they do require a letter accompanying the weapon detailing the repairs required. We will require also a photocopy of the front of the owner’s Form 3, 4, or 5.

NOTE: ATF prohibits transferring the serial number to a new outer tube in the case of damage to the tube. Tube damage will require a new suppressor.

POINT OF IMPACT SHIFT ISSUES

There are a number of issues determining the Point of Impact in a firearm and the change in POI when adding accessories on the barrel, such as flash hiders, muzzle compensators, and suppressors or varying ammunition.

When a cartridge is fired, the barrel undergoes a series of complex movements. The projectile, of course, is being forced using high pressure gases through a tubular structure that is slightly too small. Barrel steel, is slightly elastic (stainless moreso than chrome-moly steel), and the propelling pressure causes a microscopic and temporary expansion of the barrel diameter. This is associated with undulations of the barrel. These changes vary slightly with heat, which is caused by both the temperature of the hot propelling gases and the heat of friction of the bullet. Heat is lost through conduction, convection, and radiation. This may well explain the “cold shot” displacement of the POI seen in some barrels.

The barrel with its muzzle accessories is a system and not simply an accessory added like a telescopic sight on a receiver. Any weight on the end of the barrel can alter the oscillations of the barrel during firing, which will affect the location of the POI. When the removable device is installed or removed, the POI will be different, and this difference results in the POI shift. Compared to other muzzle devices (which are normally installed and never removed), a suppressor is frequently removed and the weapon is frequently utilized both with and without the suppressor.

There are several factors that directly affect the degree of POI shift.

1. Foremost is the weight of the suppressor itself with heavier suppressors causing greater POI shift.
2. Barrel rigidity is also a major issue. Heavier so-called varmint weight barrels will exhibit less POI shift for a given suppressor than lighter “field weight” barrels.
3. Barrel length is an issue with longer barrels having more flexibility that shorter barrels. This is probably more an issue of length/diameter ratio. Longer barrels with thinner profiles are less rigid than shorter barrels with heavier profiles.
4. Barrel mounting/bedding enters into the consideration.

As a rule, most of the varmint or sniper grade rifles have a relatively heavy barrel, and suppressors weighing less than 17-18 ounces will exhibit only minimal POI shifts. Weapons with exceptionally lightweight barrels, such as the M1A or M14, will exhibit a significant POI shift.

POI shift determination will need to be made for each individual firearm/suppressor/ammunition combination. On rare occasions for a specific load, barrel, and suppressor there may be no POI shift, but this is highly unusual and is not predictable.

All Gemtech products are 100% manufactured in the United States of America.

