AD-A047 730 ROME AIR DEVELOPMENT CENTER GRIFFISS AFB N Y F/G 9/5
FAA LIGHTNING PROTECTION STUDY: HANDBOOK OF INSTALLATION PROCED--ETC(U)
OCT 77 R M COSEL DOT-FA72WAI-356
UNCLASSIFIED FAA-RD-77-170 NL

1 OF 2
AD A047730

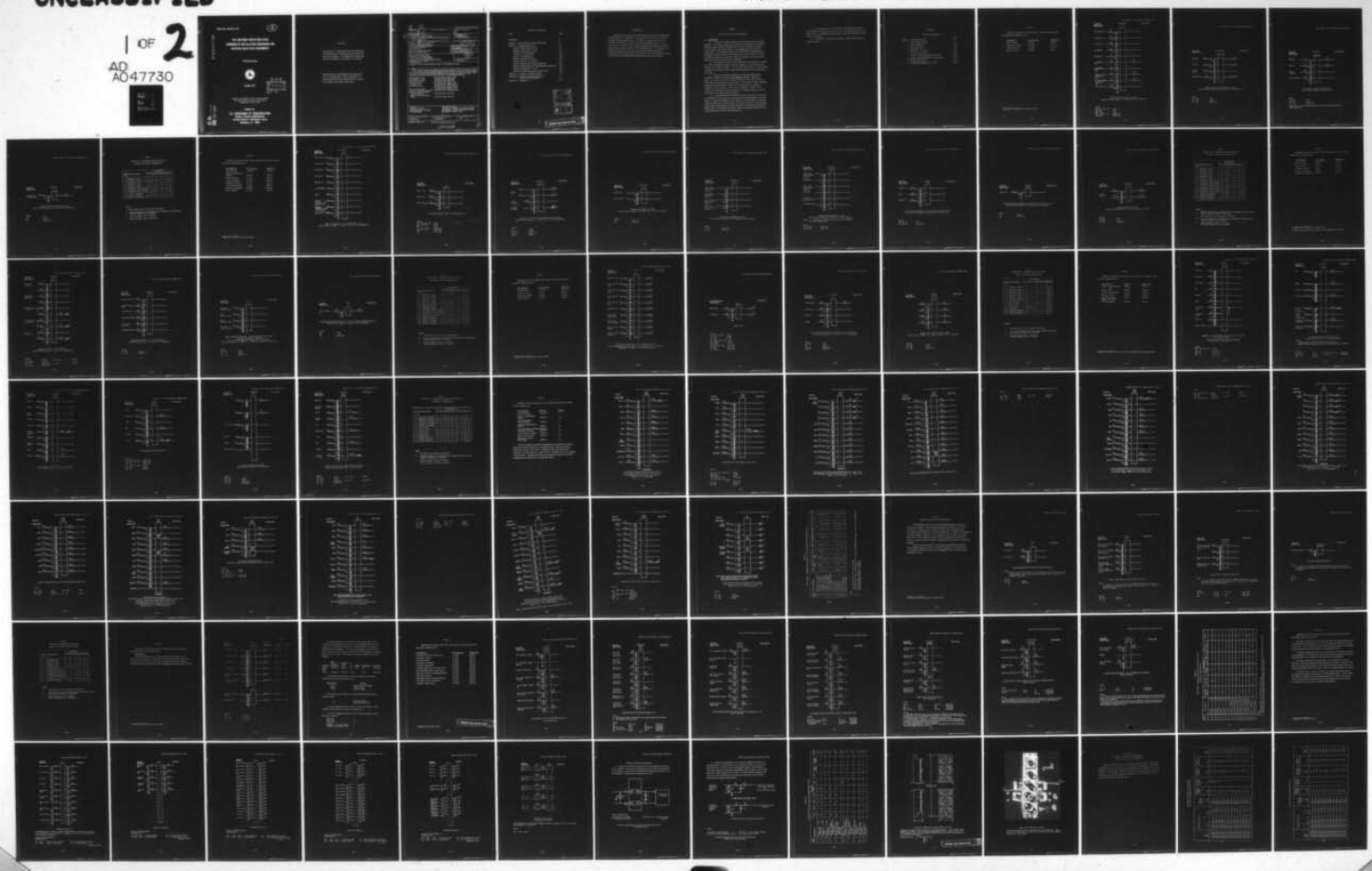

Report No. FAA-RD-77-170

12

AD A047730

FAA LIGHTNING PROTECTION STUDY: HANDBOOK OF INSTALLATION PROCEDURES FOR SELECTED SOLID STATE EQUIPMENTS

Richard M. Cosel



DDC
RECEIVED
DEC 20 1977
B

October 1977

Document is available to the U.S. public through the National Technical Information Service, Springfield, Virginia 22161.

Prepared for

U.S. DEPARTMENT OF TRANSPORTATION
FEDERAL AVIATION ADMINISTRATION
Systems Research & Development Service
Washington, D.C. 20590

AD No.
DDC FILE COPY

NOTICE

This document is disseminated under the sponsorship of the Department of Transportation in the interest of information exchange. The United States Government assumes no liability for its contents or use thereof.

The United States Government does not endorse products or manufacturers. Trade or manufacturers' names appear herein solely because they are considered essential to the object of this report.

Technical Report Documentation Page

1. Report No.	2. Government Accession No.	3. Recipient's Catalog No.
FAA-RD-77-170		

4. Title and Subtitle	5. Report Date
FAA Lightning Protection Study: Handbook of Installation Procedures for Selected Solid State Equipments	October 1977
	6. Performing Organization Code

7. Author(s)	8. Performing Organization Report No.
Compiled by Richard M. Cosel	102p.

9. Performing Organization Name and Address	10. Work Unit No. (TRAIS)
Department of Defense U.S. Air Force Rome Air Development Center Rome, New York 13441	9567 0006
	11. Contract or Grant No.
	DOT-FA72WAI-356
	13. Type of Report and Period Covered
	1999

12. Sponsoring Agency Name and Address	14. Sponsoring Agency Code
Department of Transportation Federal Aviation Administration Systems Research and Development Service Washington, D. C. 20590	ARD-350

15. Supplementary Notes

Prepared by Post Doctoral Program, Rome Air Development Center.

16. Abstract

The handbook summarizes lightning protection installation data as developed in a series of detailed reports previously prepared under the Post Doctoral Program by various authors. Each report is specifically referenced below and in the appropriate handbook section. The handbook details the circuitry and parts lists for the following equipments.

Wilcox Mark 1/A ILS	FAA-RD-75-49, January 1975
Wilcox Mark 1/C ILS	FAA-RD-75-50, March 1975
Wilcox Mark 1/D ILS	FAA-RD-77-102, May 1977
AIL Type 55K ILS	FAA-RD-75-47, January 1975
AIL Mark 1 ILS	FAA-RD-75-48, January 1975
AN/GRN-27(V) ILS	FAA-RD-74-131, April 1974 and FAA-RD-75-24, February 1975
Mark III (Cat. III) ILS	FAA-RD-75-73, February 1975
Runway Visual Range Equipment	FAA-RD-75-181, December 1975
Automated Radar Terminal System (ARTS III)	FAA-RD-75-70, April 1975
Airport Surveillance Radar, ASR-7	FAA-RD-75-180, July 1975

17. Key Words	18. Distribution Statement
Lightning Protection Solid State System Protection LPM Installation	Document is available to the public through the National Technical Information Service, Springfield, Virginia 22151.

19. Security Classif. (of this report)	20. Security Classif. (of this page)	21. No. of Pages	22. Price
Unclassified	Unclassified	103	

Form DOT F 1700.7 (8-72) Reproduction of completed page authorized

309050

TABLE OF CONTENTS

Title	Page
Foreword	iv
Chapter 1 - Introduction and General Information	1-1
Chapter 2 - Technical Instructions	2-1
Section 1 Wilcox Mark 1/A ILS	2-2
Section 2 Wilcox Mark 1/C ILS	2-7
Section 3 AIL Type 55K ILS	2-17
Section 4 AIL Mark I ILS	2-22
Section 5 AN/GRN-27 (V) ILS	2-27
Section 6 Mark III (CAT III) ILS	2-34
Section 7 Runway Visual Range Equipment	2-51
Section 8 Automated Radar Terminal System (ARTS III)	2-56
Section 9 Wilcox Mark 1/D ILS	2-67
Section 10 Airport Surveillance Radar ASR-7	2-76
Appendix A - Lightning Protection Modules	A-1
Appendix B - Leadless Transient Suppressors Electrical Characteristics	B-1
Appendix C - References	C-1

ACCESSION for
NTIS White Section
DDC Buff Section
UNANNOUNCED
JUSTIFICATION
BY
DISTRIBUTION/AVAILABILITY CODES
Dist. AVAIL. and/or SPECIAL
A

PRECEDING PAGE BLANK-NOT FILMED

FOREWORD

This handbook was prepared by the Department of Electrical Engineering, Florida Institute of Technology as a participant in the Post Doctoral Program at Rome Air Development Center. The effort was conducted via RADC Job Order No. 9567 006 for the Federal Aviation Administration under Contract No. DOT-FA 72 WAI-356. The contract was administered under the direction of Mr. Fred S. Sakate, ARD 350, FAA, Washington, D.C. The handbook was compiled by Richard M. Cosel from the series of individual investigative reports prepared previously under this program by the participating universities. Each report is specifically referenced on the first page of each section.



Chapter 1

Introduction and General Information

1. Introduction

1.1 The objective of this handbook is to provide the necessary detailed guidance, to be used in conjunction with information available in the applicable instruction books and other handbooks, for the proper installation of devices for the protection of the listed systems from lightning induced transients in buried cables. The equipments listed are all of the newer solid state design utilizing low voltage control levels interfacing with circuits which can be easily overloaded, resulting in catastrophic failure of components, erroneous status indications and loss of remote control capability.

1.2 The handbook essentially summarizes the recommendations contained in a series of detailed investigative reports, appendix C, previously prepared under the Post Doctoral Program. Each equipment is treated in a separate section complete with schematics of the terminal board installations and recommended parts lists.

1.3 The protective devices specified are newly developed leadless versions of a family of transient voltage suppressor diodes, Appendix B. These are mounted in an also newly developed barrier strip with an integral diode holder allowing for ease of maintenance. These barrier strips, designated Lightning Protection Modules (LPMs) are to be available in two lengths, 5 terminal, FAA part number FA 9455A and 10 terminal, FA 9455B. These modules are described in detail in Appendix A. An additional type for use with coaxial lines is presently under development.

1.4 In each of the technical instruction sections the lines to be protected are identified by station name, terminal block and/or plug designator, and signal name. In addition the applicable circuit diagram in the equipment's instruction manual is referenced. In each case the LPM barrier strip will replace existing barrier strips in the junction box where the cables are terminated at building or shelter entry, normally the demarcation cabinet in permanent structures or outside junction box on trailers and field shelters.

1.5 Specific junction box terminals are determined by the original field installation and will vary from site to site. Accordingly in each case the affected lines are identified on the drawings by either the component terminal board or receptacle.

1.6 All resisters specified are 2 watt 5% carbon composition unless otherwise noted.

Chapter 2

Technical Instructions

		page
Section 1	Wilcox Mark I/A ILS	2-2
2	Wilcox Mark I/C ILS	2-8
3	AIL Type 55K ILS	2-19
4	AIL Mark I ILS	2-25
5	AN/GRN - 27 (V) ILS	2-31
6	Mark III ILS (CAT III)	2-39
7	Runway Visual Range Equipment (RVR)	2-57
8	ARTS III Automated Radar Terminal System	2-63
9	Wilcox Mark 1/D ILS	2-67
10	Airport Surveillance Radar ASR-7	2-76

Section 1

Lightning Protection for Status and Control Lines of the Wilcox Mark 1/A Instrument Landing Systems*.

Unit Affected	FAA Type No.	Manual (TI)
Status Control	FA 8014	6750.10
Glide Slope Control	FA 8024	6750.15
Localizer Control	FA 8006	6750.15
Marker Beacon	FA 8032	6770.3

* Report No. FAA-RD-75-49, January 1975

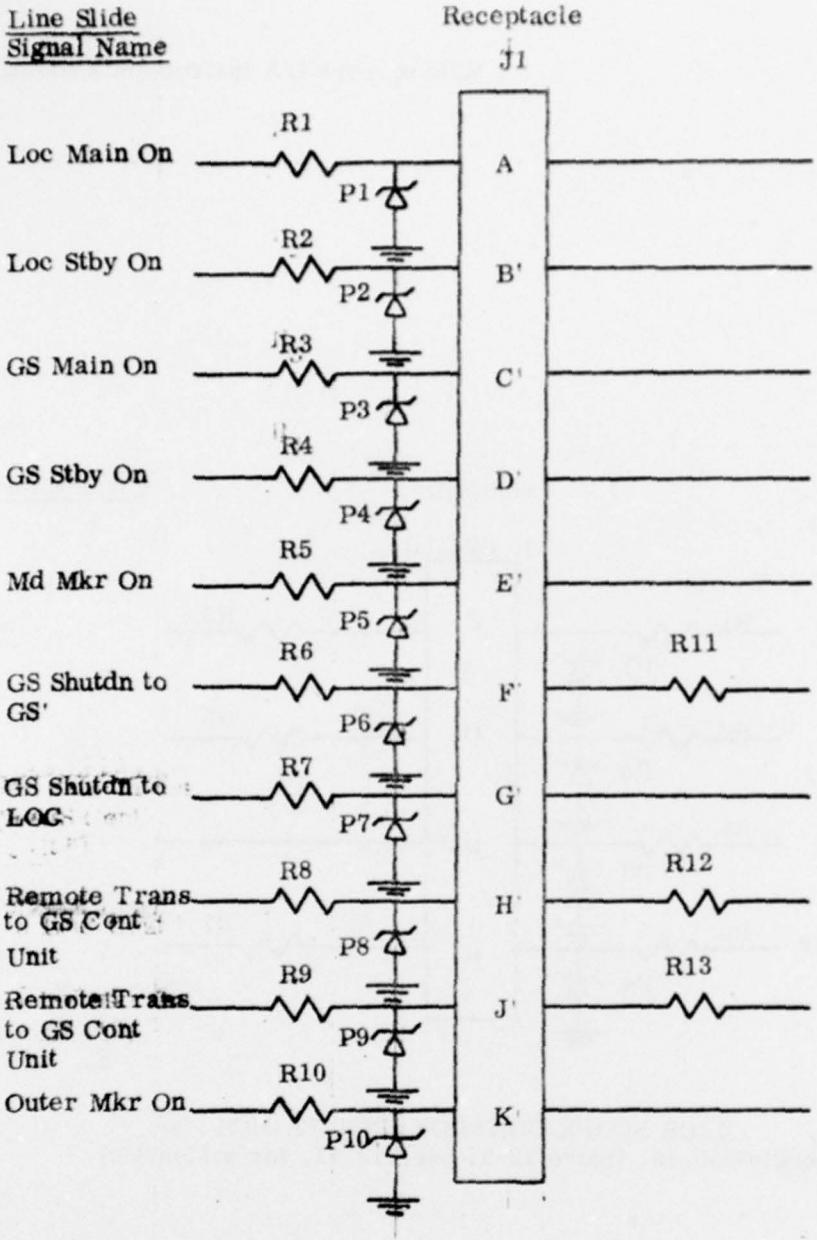

STATUS/CONTROL UNIT FA 8014
(See TI 6750.10, figure 12-2, page 12-25, for schematic)

Parts:

R1 - R4, R6 - R9	56 Ω
R5, R10	30 Ω
R11 - R13	16 Ω
P1 - P4, P6 - P9	GZ41114X
P5, P10	GZ41114Q

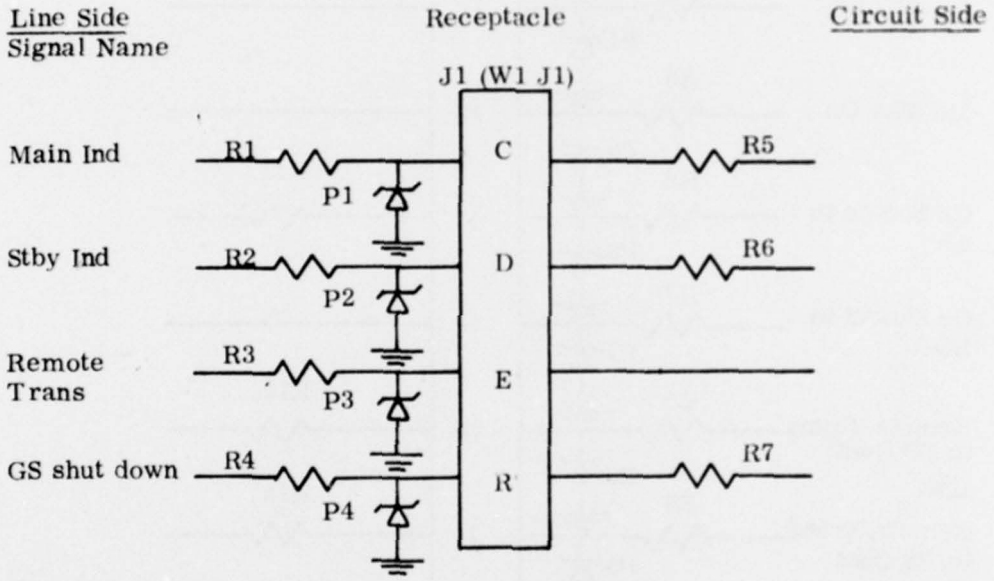

GLIDE SLOPE CONTROL UNIT FA 8024
(See TI 6750.15, figure 12-5, page 12-11, for schematic)

Parts:

R1 - R4	56 Ω
R5 - R7	16 Ω
P1 - P4	GZ41114X

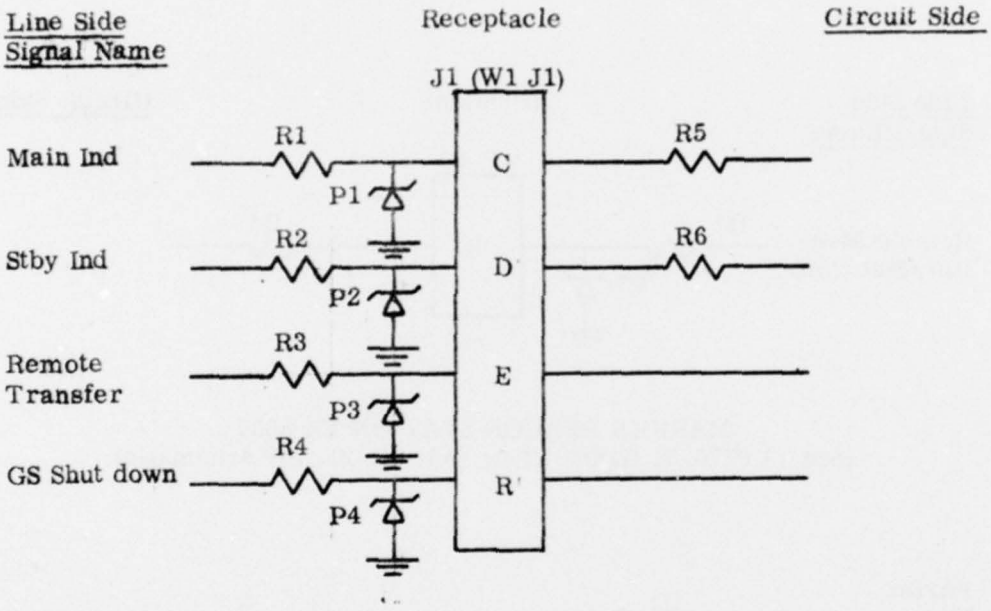

LOCALIZER CONTROL UNIT FA 8006
(see TI 6750.15, figure 12-6, page 12-13)

Parts:

R1 - R4	56 Ω
R5, R6	16 Ω
P1 - P4	GZ41114X

Standard Telco carbon blocks should be used to protect telephone line (J1-U and J1-Z)

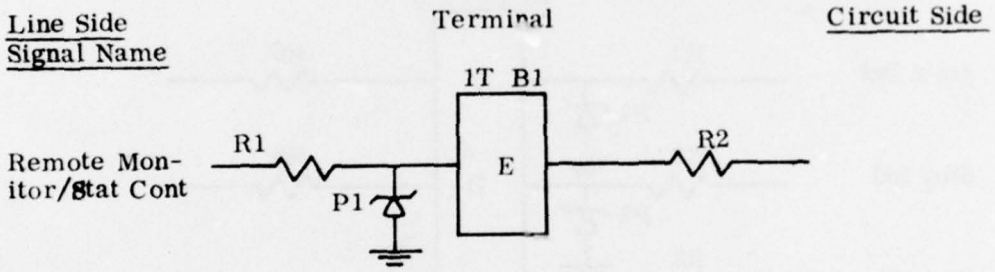

MARKER BEACON STATION FA 8032
(See TI 6770.3, figure 12-9, page 12-21, for schematic)

Parts:

R1	30 Ω
R2	10 Ω
P1	GZ41114Q

Table 1-1

PARTS LIST - Lightning Protection for Wilcox
Mark I/A Instrument Landing System

ITEM No.	DESCRIPTION	QUANTITIES					
		S/C	GS	LOC	MMKR	OMKR	Total
1	Resistor, 10 Ω				1	1	2
2	Resistor, 16 Ω	3	3	2			8
3	Resistor, 30 Ω	2			1	1	4
4	Resistor, 56 Ω	8	4	4			16
5	Protector, GZ 41114 Q	2			1	1	4
6	Protector, GZ 41114 X	8	4	4			16
7	LPM, 5 terminal		1	1	1	1	4
8	LPM, 10 terminal	1					1

Notes:

1. All resistors are 2 watt carbon, 5% tolerance
2. GZ Series protectors are leadless type as supplied by General Semiconductor Industries or equivalent.
3. LPM 5 terminal, Part # FA 9455 A

   LPM 10 terminal, Part # FA 9455 B

Section 2

Lightning Protection for Status and Control Lines of the Wilcox Mark I/C Instrument Landing Systems.*

Units Affected	FAA Type No.	Manual (TI)
Status Control	FA 8856	6750.51
Localizer/Glide Slope Control	FA 8852	6750.52
Monitor Detector	FA 8851	6750.57
Localizer Monitor	FA 8850	6750.59
Glide Slope Monitor	FA 8867	6750.61
Localizer Interphone	FA 8840	6750.62
Glide Slope Interphone	FA 8860	6750.48
Marker Beacon	FA 8831	6750.58

* Report No. FAA-RD-75-50, March 1975.

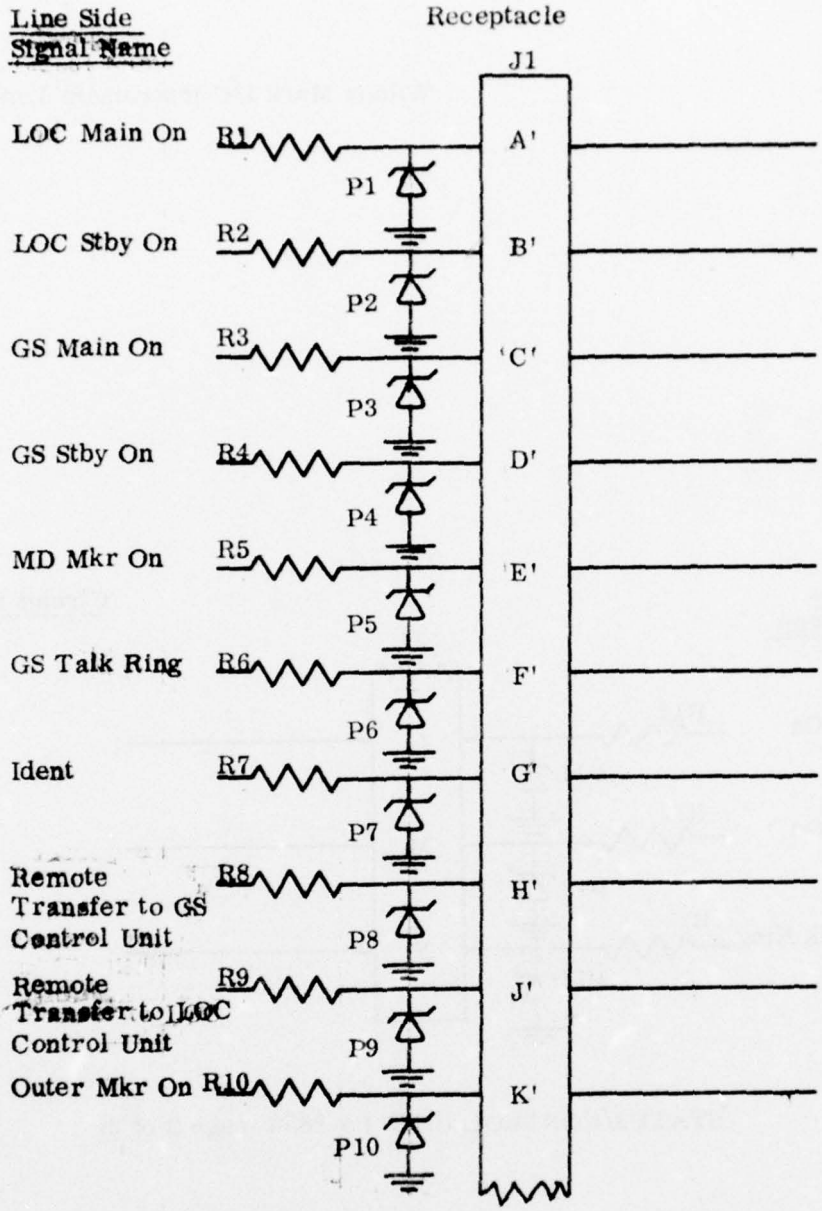

STATUS/CONTROL UNIT FA 8856 (page 1 of 2)
(See TI 6750.51, figure 12-6, pages 12-13, 12-14 for schematic)

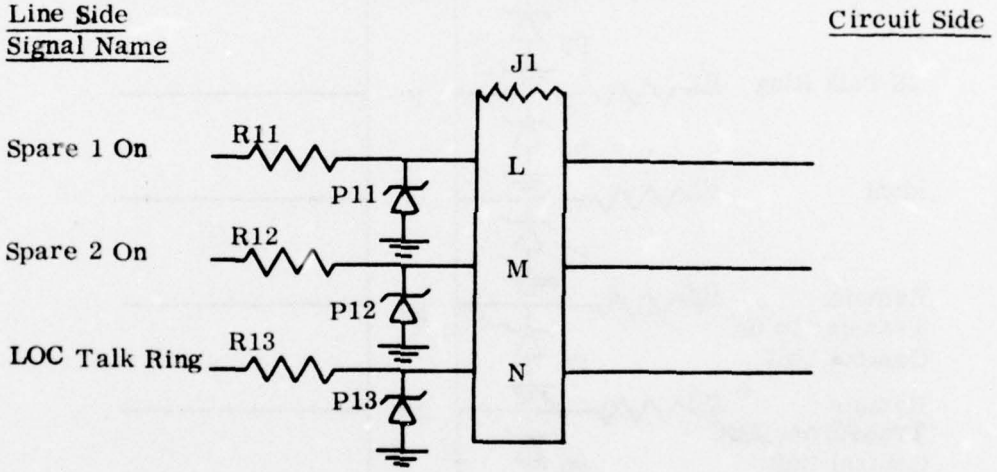

STATUS/CONTROL UNIT FA 8856 (page 2 of 2)

Parts:

R1 - R4, R6 - R9	56 Ω
R5, R10 - R12	30 Ω
R13	24 Ω
P1 - P4, P6 - P9	GZ41114X
P5, P10 - P12	GZ41114Q
P13	GZ41114W

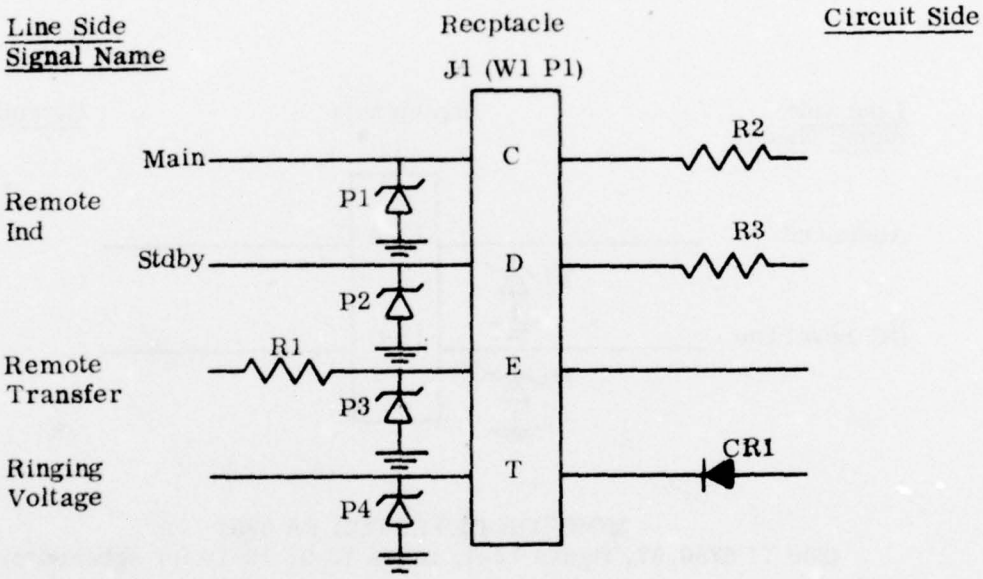

LOCALIZER/GLIDE SLOPE CONTROL UNIT FA 8852
(See TI 6750.52, figure 12-3, pages 12-7, 12-8, for schematic)

Parts:

R1	56 Ω
R2, R3	16 Ω
P1 - P4	GZ41114X
CR1,	1N3612

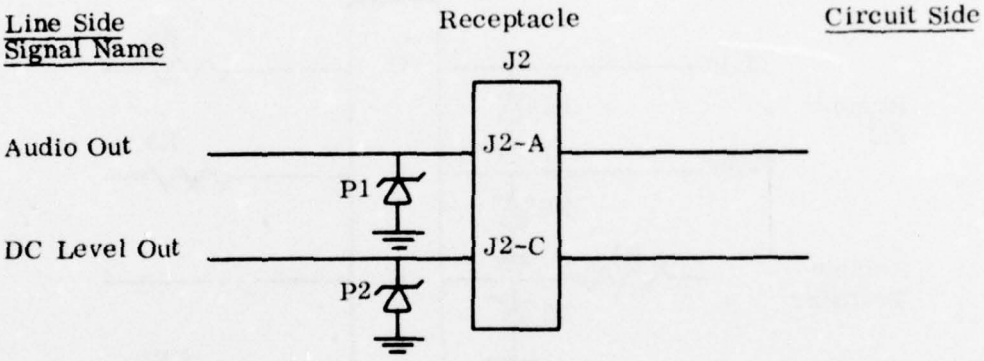

MONITOR DETECTOR FA 8851
(See TI 6750.57, figure 12-4, pages 12-9, 12-10 for schematic)

Parts:

P1	GZ41114H
P2	GZ41114T

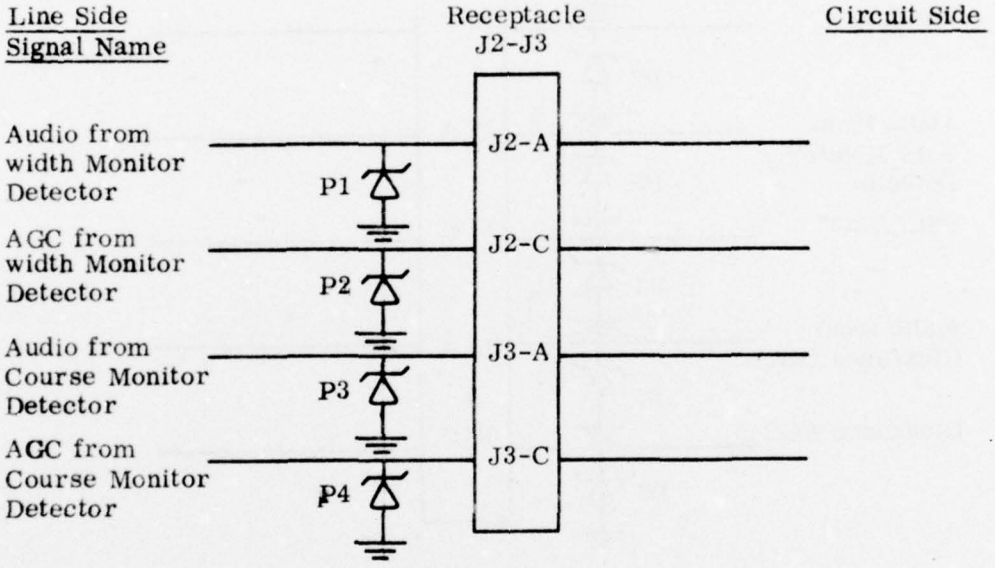

LOCALIZER MONITOR FA 8850
(See TI 6750.59, figure 12-7, page 12-15, for schematic)

Parts:

P1, P3	GZ41114H
P2, P4	GZ41114T

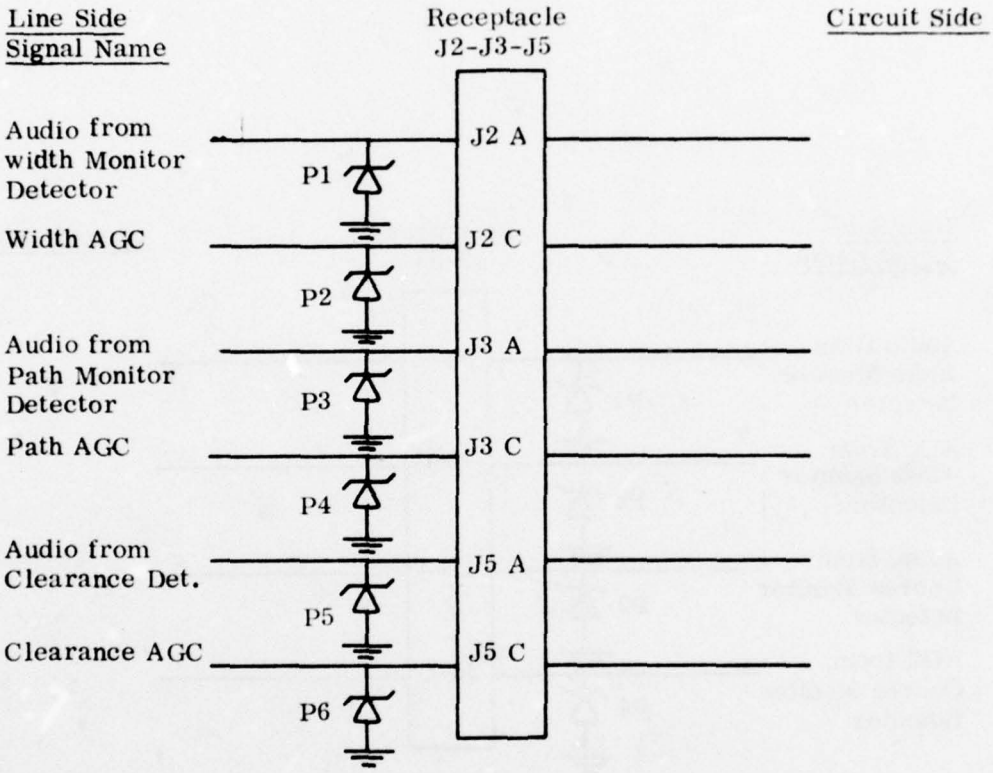

GLIDE SLOPE MONITOR FA 8867
(See TI 6750.61 figure 12-7, page 12-15, for schematic)

Notes: (1) Protection not required when mounted in GS Shelter
(2) Capture effect only.

Parts:

P1, P3, P5	GZ41114H
P2, P4, P6	GZ41114T

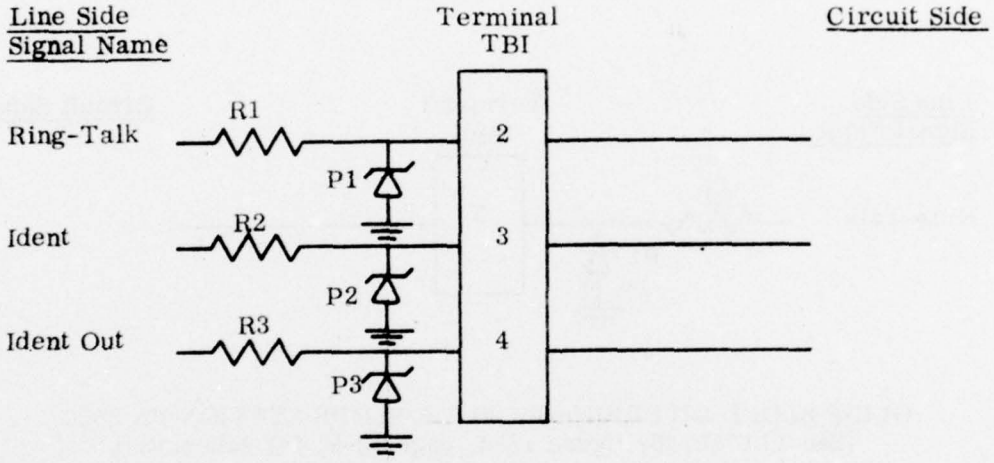

LOCALIZER INTERPHONE, LOCALIZER STATION FA 8840
(See TI 6750.62, figure 12-4, page 12-11, for schematic)

Parts:

R1, R2, R3	56 Ω
P1, P2, P3	GZ41114X

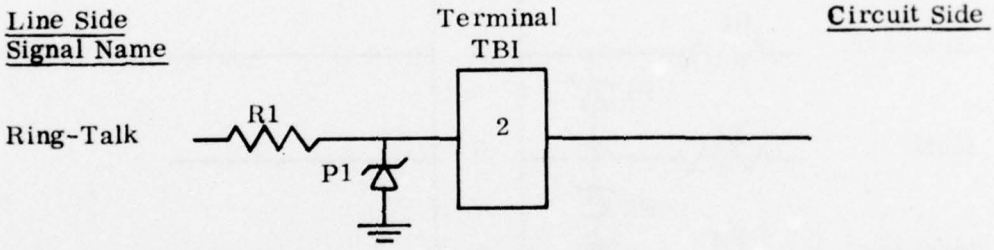

GLIDE SLOPE INTERPHONE, GLIDE SLOPE STATION FA 8860
(See TI 6750,48, figure 12-4, page 12-9, for schematic)

Parts:

R1	56 Ω
P1	GZ41114X

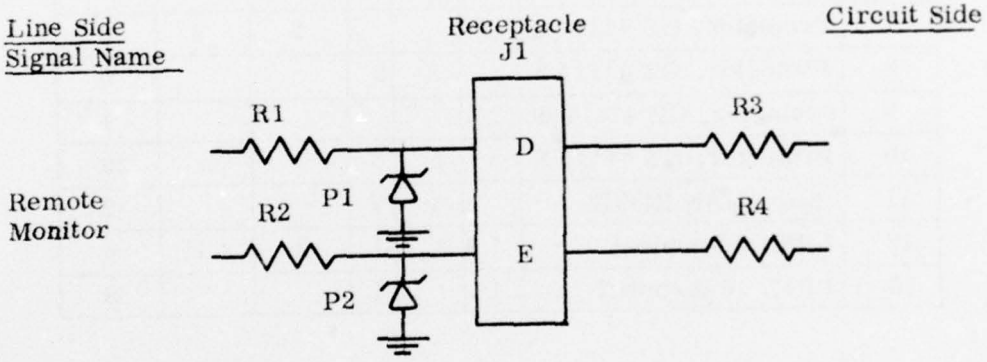

MARKER BEACON FA 8831
(See TI 6750.58, figure 12-14, page 12-29, for schematic)

Parts:	
R1, R2	30 Ω
R3, R4	10 Ω
P1, P2	GZ41114Q

Table 2-1

PARTS LIST - Lightning Protection for Wilcox Mark I/C Instrument Landing System

ITEM No.	DESCRIPTION	QUANTITIES					
		S/C	LOC	GS	MMKR	OMKR	Total
1	Resistor, 10 Ω				2	2	4
2	Resistor, 16 Ω		2	2			4
3	Resistor, 24 Ω	1					1
4	Resistor 30 Ω	4			2	2	8
5	Resistor, 56 Ω	8	4	2			14
6	Protector, GZ 41114 H		3	2			5
7	Protector, GZ 41114 Q	4			2	2	8
8	Protector, GZ 41114 T		3	2			5
9	Protector, GZ 41114 W	1					1
10	Protector, GZ 41114 X	8	7	5			20
11	Diode, JAN IN3612		1	1			2
12	LPM, 5 terminal	1	2	1	1	1	6
13	LPM, 10 terminal	1	1	1			3

Notes:

1. Quantities shown are for Null Reference Glide Slope system with Width Monitor Detector mounted within shelter
2. All resistors are 2 watt carbon, 5% tolerance
3. GZ series protectors are leadless type as supplied by General Semiconductor Industries or equivalent
4. LPM 5 terminal, Part No. FA 9455 A
   LPM 10 terminal, Part No. FA 9455 B

Section 3

Lightning Protection for Status and Control Lines of the AIL Type 55K Instrument Landing Systems*

Units Affected	AIL Type No.	Manual (TI)
Remote Monitor	352167	6750.25
Remote Control	372415-1	6750.25
Localizer Station**	352103	6750.22
Glide Slope Station**	352203	6750.24
Marker Beacon Station	352407	6770.4

* Report No. FAA-RD-75-47, January 1975

** Power Distribution Panel - identical in both transmitting stations.

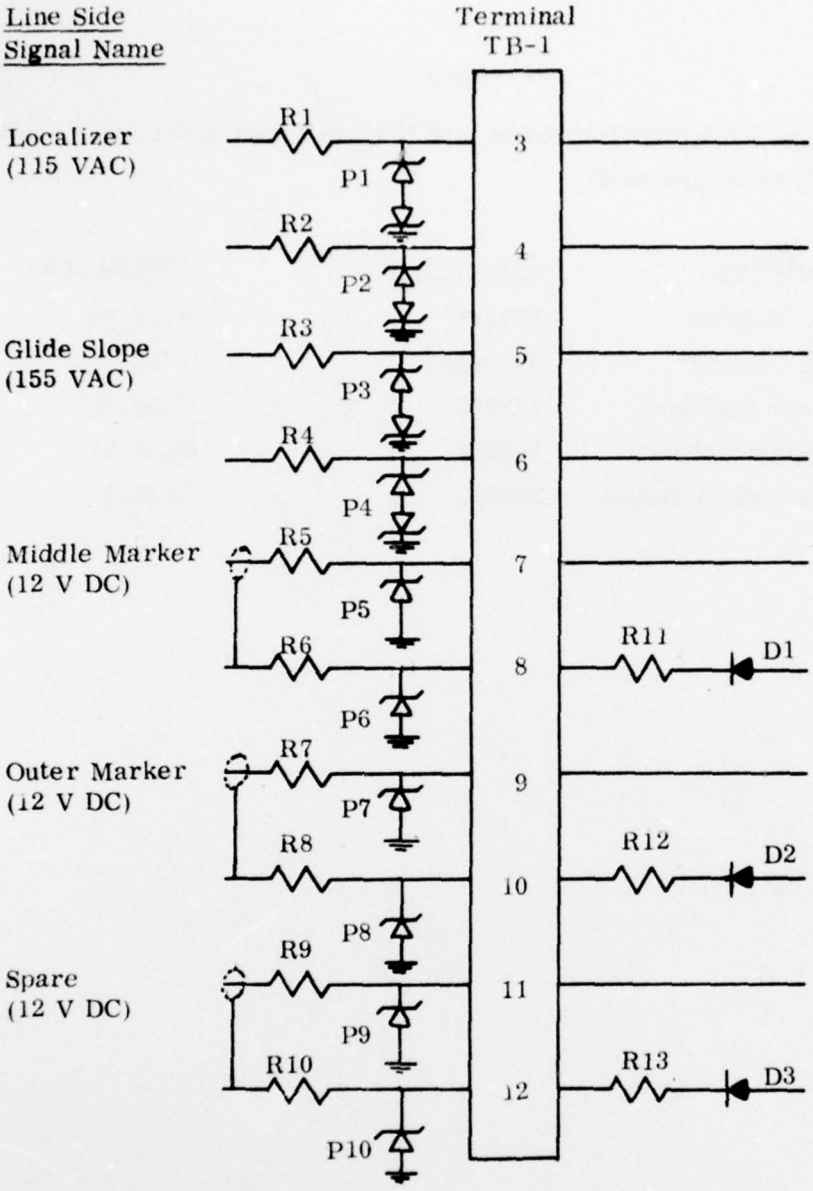

REMOTE MONITOR AIL TYPE 352167
(See TI 6750.25, figure 3-1, page 3-3, for schematic)

Parts:			
R1 - R4	100 Ω	R11 - R13	320 Ω
R5 - R10	15 Ω		
P1 - P4	GZ41115M	D1 - D3	IN3612
P5 - P10	GZ41114Q		

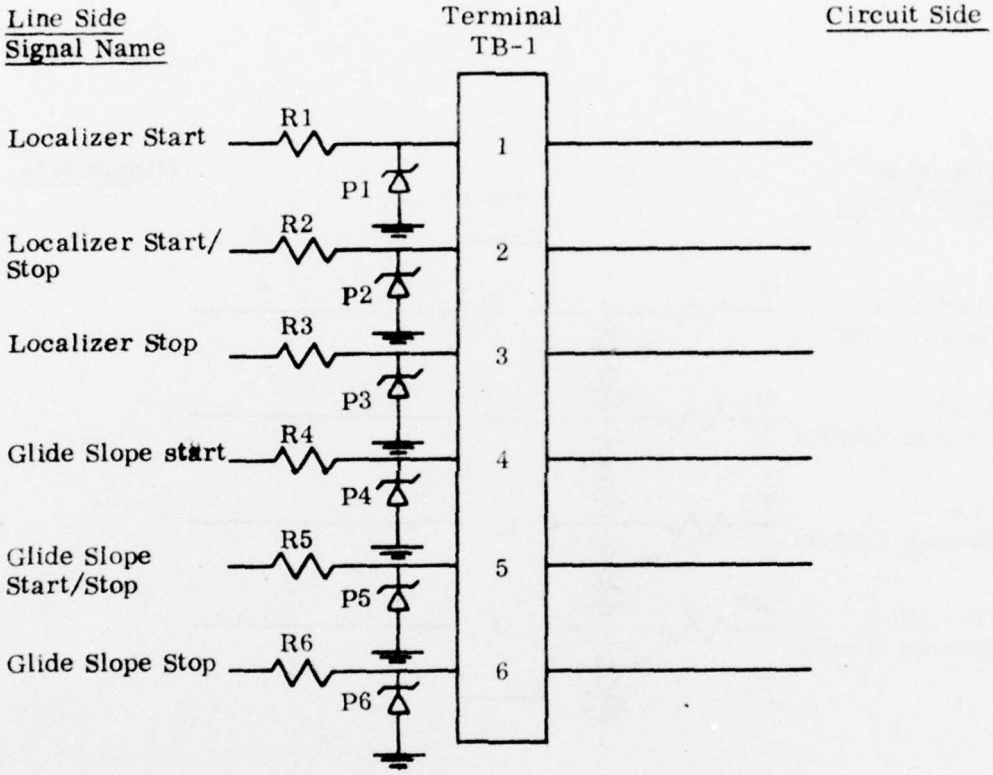

REMOTE CONTROL, AIL TYPE NO. 372415-1
(See TI 6750.25, figure 3-2, page 3-6, for schematic)

Parts:

R1 - R6	100 Ω
P1 - P6	GZ41114M

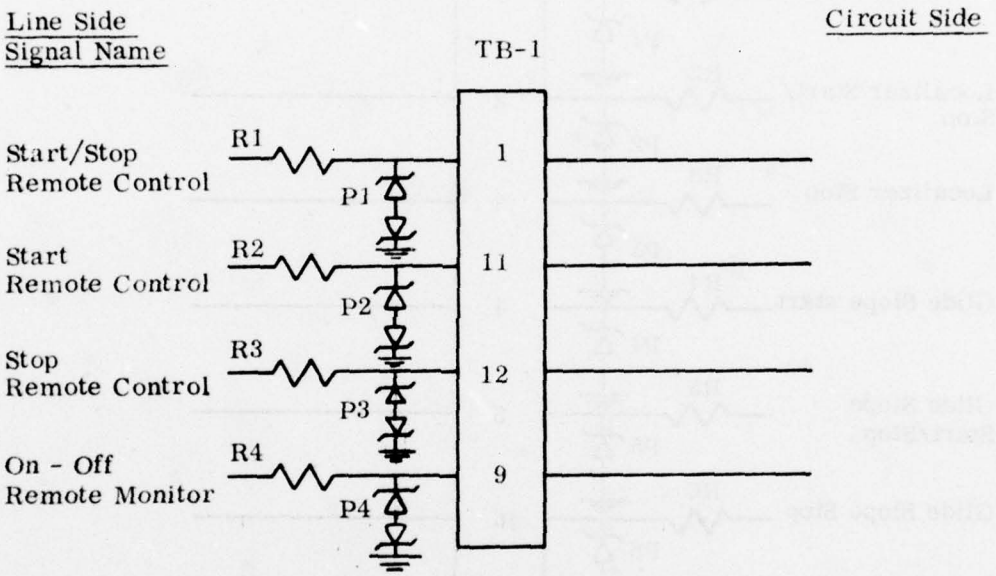

LOCALIZER/GLIDE SLOPE POWER DISTRIBUTION PANEL
(Panels in both units are identical -
See TI 6750.22, figure 3-16, page 3-49, for schematic)
(TI 6750.25, figure 3-3, page 3-7, - TI 6750.24, figure 3-17, page 3-51)

Parts:

R1 - R3	100 Ω
R4	200 Ω
P1 - P4	GZ41117A

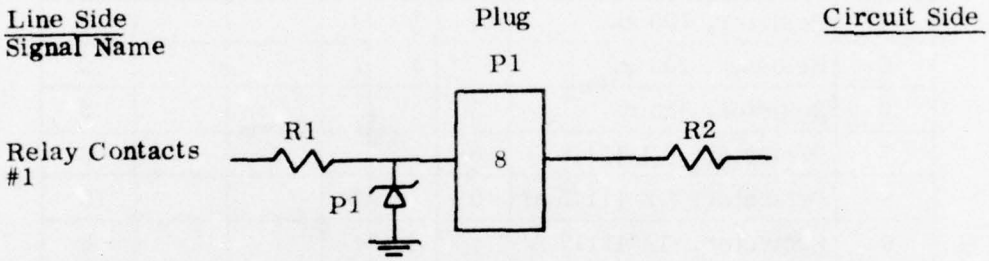

MARKER BEACON STATION, AIL TYPE NO. 352407 MONITOR MODULE
(See TI 6770.4, figure 3-7, page 3-15, for schematic)

Parts:

R1	30 Ω
R2	24 Ω
P1	GZ41114Q

Table 3-1

PARTS LIST - Lightning Protection for AIL

Type 55K Instrument Landing System

ITEM No.	DESCRIPTION	QUANTITIES					
		REM	LOC	GS	MMKR	OMKR	Total
1	Resistor, 15 Ω	6					6
2	Resistor, 24 Ω				1	1	2
3	Resistor, 30 Ω				1	1	2
4	Resistor, 100 Ω	10	3	3			16
5	Resistor, 200 Ω		1	1			2
6	Resistor, 320 Ω	3					3
7	Protector, GZ 41114 Q	6			1	1	8
8	Protector, GZ 41115 M	10					10
9	Protector, GZ 41117 A		4	4			8
10	Diode JAN IN3612	3					3
11	LPM, 5 terminal	1	1	1	1	1	5
12	LPM, 10 terminal	2					2

Notes:

1. All resistors are 2 watt carbon, 5% tolerance
2. GZ series protectors are leadless type as supplied by General Semiconductor Industries or equivalent
3. LPM 5 terminal, Part No. FA 9455 A
   LPM 10 terminal, Part No. FA 9455 B

Section 4

Lightning Protection for Status and Control Lines of the AIL Mark 1 Instrument Landing Systems.*

Units Affected	FAA Type No.	Manual (TI)
Status/Control	FA 8670	6750.29
Localizer Control	FA 8611	6750.29
Glide Slope Control	FA 8631	6750.29
Marker Beacon	FA 8603	6750.29

* Report No. FAA-RD-75-48, January 1975

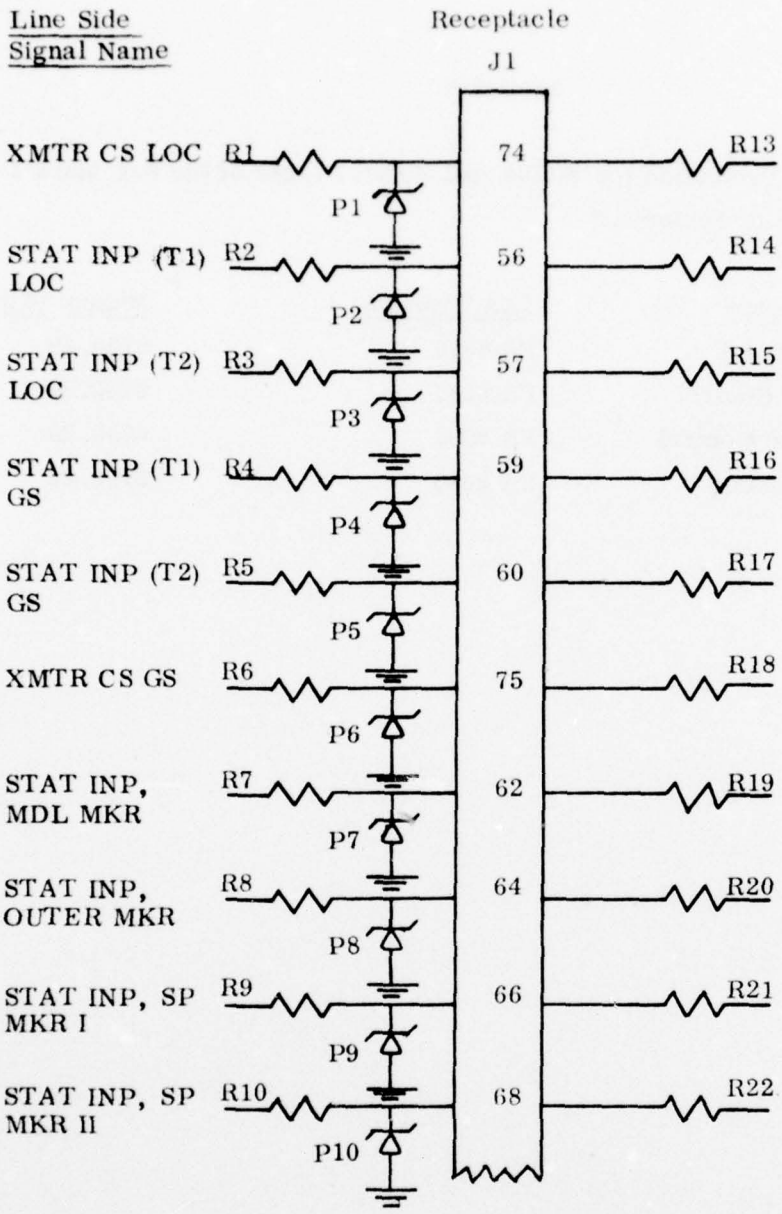

ILS STATUS/CONTROL UNIT FA 8670 (page 1 of 2)
(See TI 6750.29 figure 12-9, pages 12-23 through 12-30, for schematic also figure 12-3, page 12-13, for pin locations)

Line Side (cont.)
Signal Name

Circuit Side

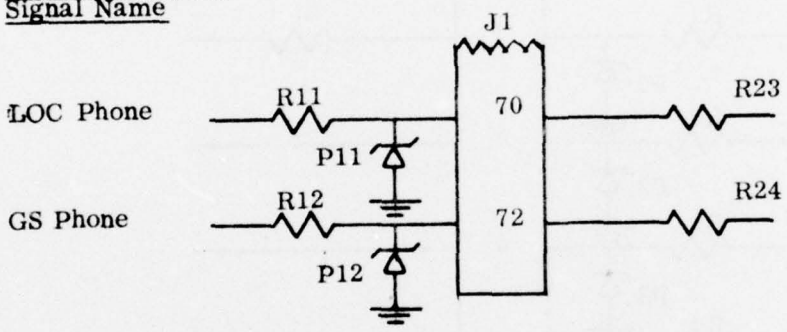

Parts:

R1, R6, R11, R12	80 Ω
R2 - R5	60 Ω
R7 - R10	30 Ω
R13, R18, R23, R24	15 Ω
R14 - R17	680 Ω
R19 - R22	10 Ω
P1, P6, P11, P12	GZ41115C
P2 - P5	GZ41114Y
P7 - P10	GZ41114Q

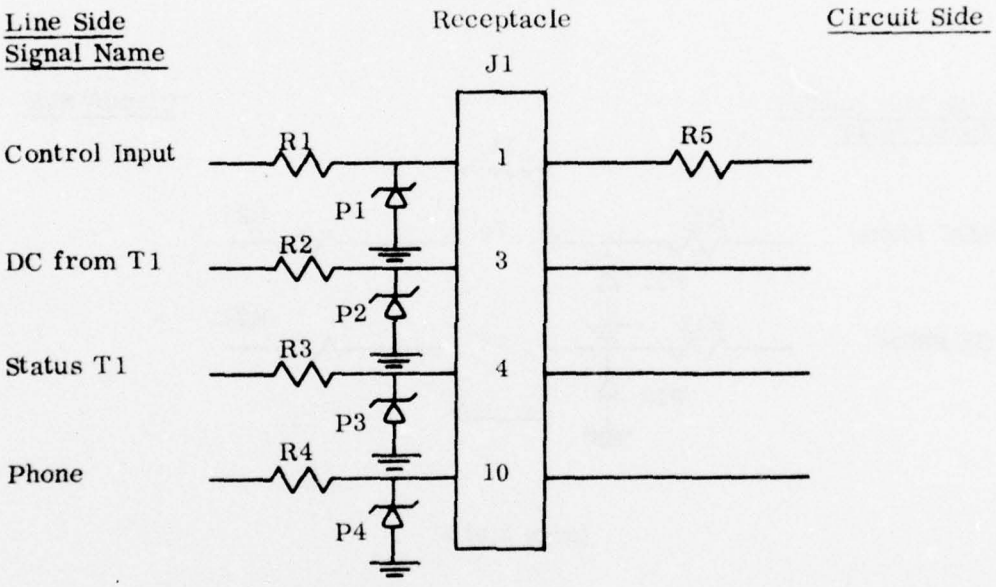

LOCALIZER/GLIDE SLOPE CONTROL UNIT FA 8611/8631
(See TI 6750.29, figure 12-8, page 12-21, for schematic)

Parts:

R1 - R4	80 Ω
R5	15 Ω
P1, P4	GZ41115C
P2, P3	GZ41114Y

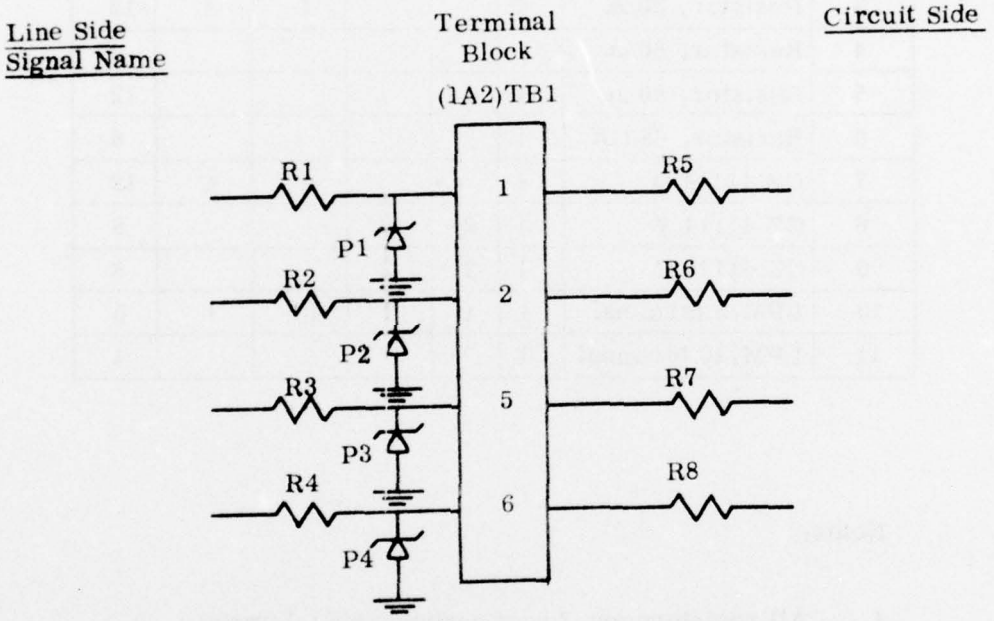

MARKER BEACON STATION FA 8603
(See TI 6750.35, figure 12-3, pages 12-9 and 12-10 for schematic)

Parts:

R1 - R4	30 Ω
R5 - R8	10 Ω
P1 - P4	GZ41114Q

Table 4-1

PARTS LIST - Lightning Protection for AIL

Mark I Instrument Landing System

ITEM No.	DESCRIPTION	QUANTITIES					
		SCU	LCU	GSCU	MMKR	OMKR	Total
1	Resistor, 10 Ω	4			4	4	12
2	Resistor, 15 Ω	4	1	1			6
3	Resistor, 30 Ω	4			4	4	12
4	Resistor, 60 Ω	4					4
5	Resistor, 80 Ω	4	4	4			12
6	Resistor, 680 Ω	4					4
7	GZ 41114 Q	4			4	4	12
8	GZ 41114 Y	4	2	2			8
9	GZ 41115 C	4	2	2			8
10	LPM, 5 terminal	1	1	1	1	1	5
11	LPM, 10 terminal	1					1

Notes:

1. All resistors are 2 watt carbon + 5% tolerance
2. GZ series protectors are leadless type as suplied by General Semiconductor Industries or equivalent
3. LPM 5 terminal, Part # FA 9455 A
   LPM 10 terminal, Part # FA 9455 B

Section 5

Lightning Protection for Statics and Control Lines of the AN/GRN - 27 (V) Instrument Landing System*

Units Affected	Part No.	Manual (TI)
Remote Control Indicator & Monitor Panel	909486-1 909495-1	6750.72 6750.72
Marker Beacon Station	916110-1	6750.73
Localizer Station	923798-1	6750.68
Glide Slope Station (single frequency)	909977-1	6750.69
Far Field Monitor	917102-1	6750.71

* Report No. FAA-RD-74-131, April 1974, FAA-RD-75-24, February 1975

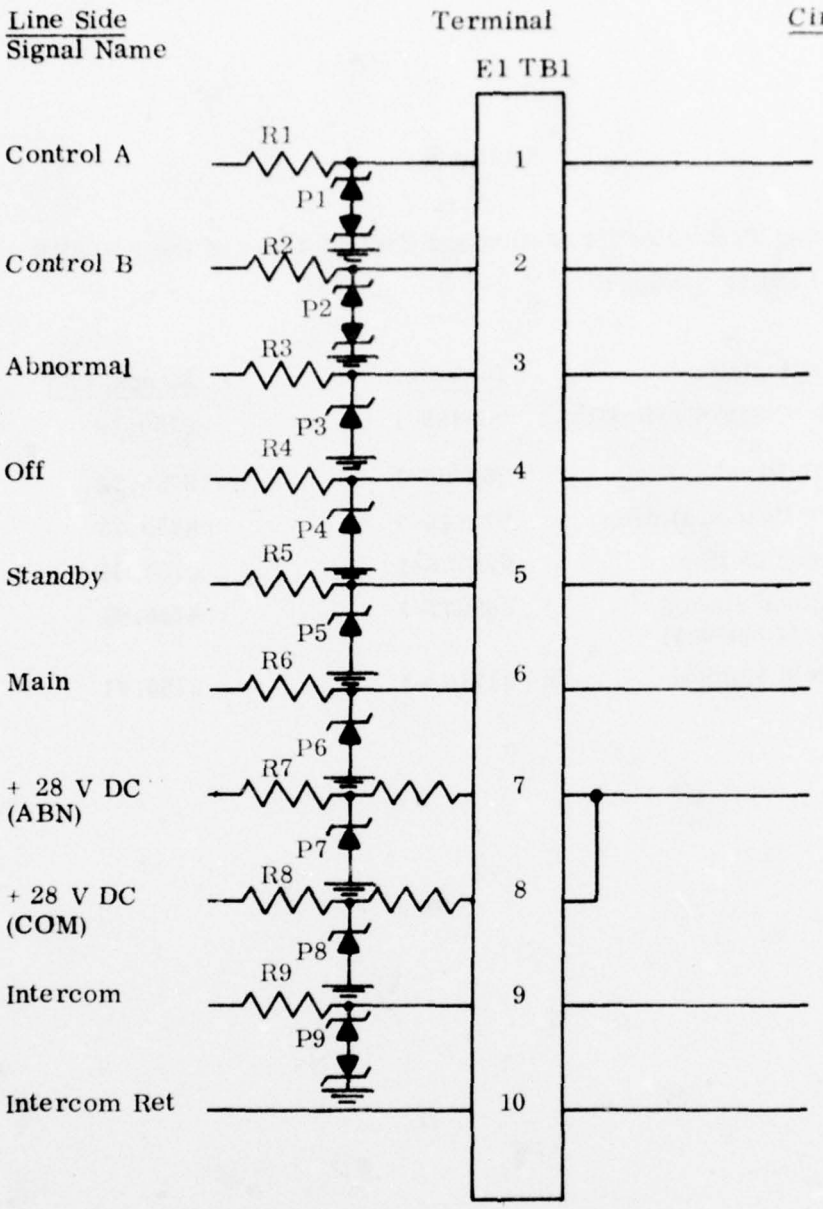

REMOTE CONTROL INDICATOR AND MONITOR PANEL
909486-1, 909495-1
(See TI 6750.72, figure 12-1, for schematic)
Protection shown also applies to TB2-TB6

Parts:

R1 - R8, R10, R11	56 Ω
R9	110 Ω
P1, P2	GZ41116L
P3 - P8	GZ41116X
P9	GZ41116T

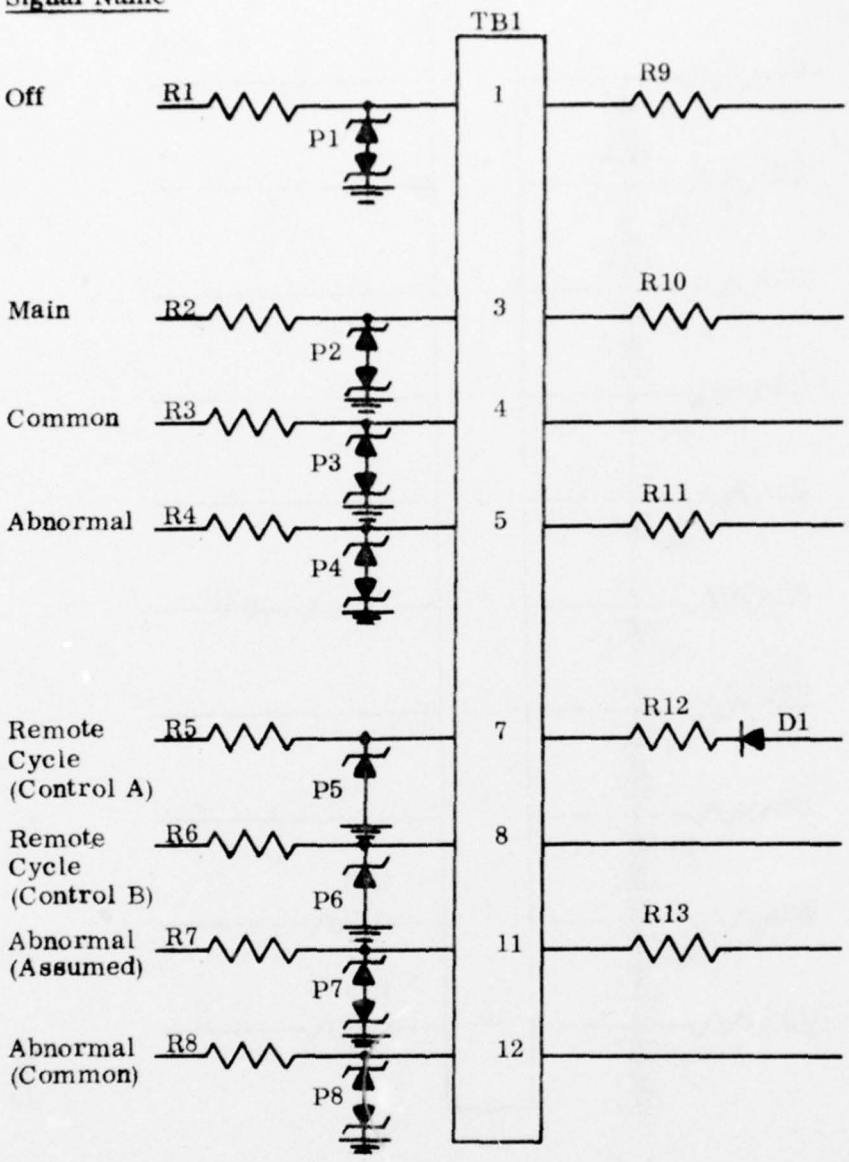

MARKER BEACON STATIONS 916110-1
(See TI 6750.73, figure 12-55, for schematic)

Notes:

1. Same for outer, Middle and Inner Marker Beacons.
2. Install protection on intercom lines as shown for localizer station.

Parts:			
R1 - R8	56 Ω	P1 - P4, P7, P8	GZ41116L
R9 - R13	39 Ω	P5, P6	GZ41114X
D1	IN 4007		

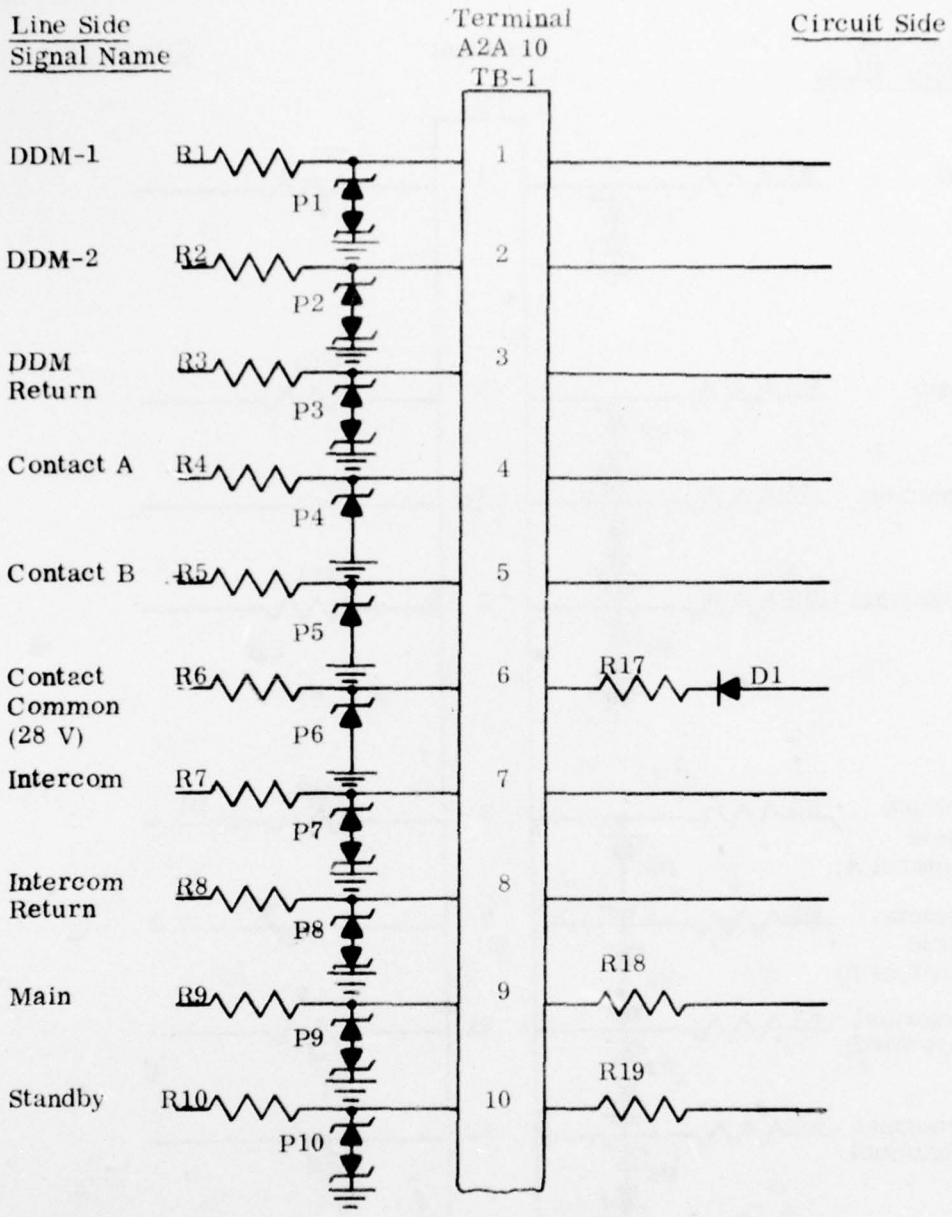

LOCALIZER STATION, 923798-1 (page 1 of 2)
(See TI 6750.68 pages 4-49, 4-50, cable list)

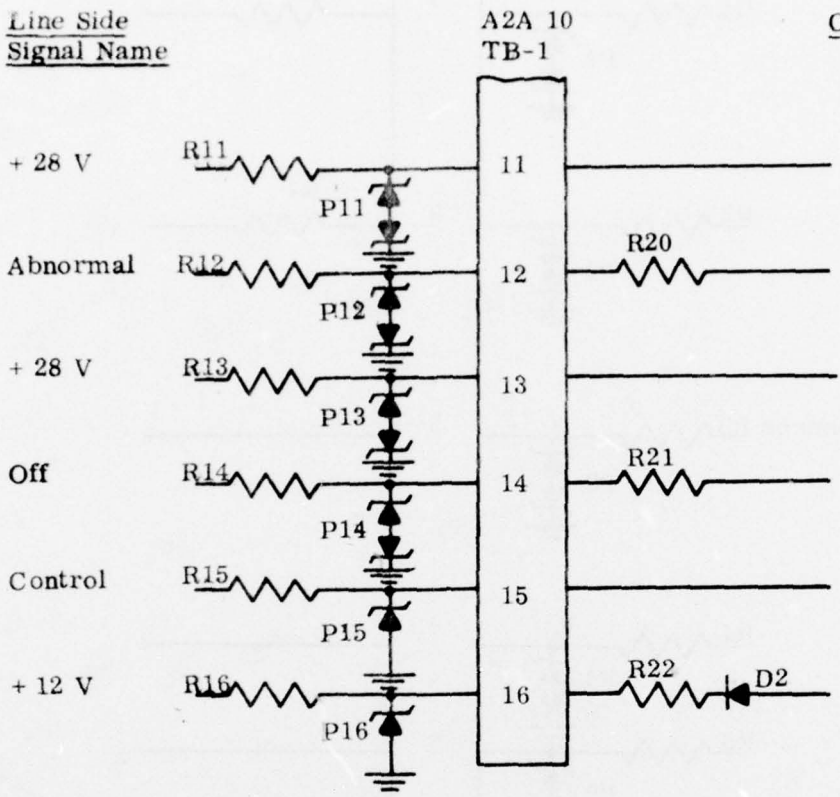

LOCALIZER STATION (page 2 of 2)

Parts:

P1 - P3, P9 - P14	GZ41116L
P4 - P6, P15, P16	GZ41114X
P7 - P8	GZ41116T
R1 - R6, R9 - R16	56 Ω
R7 - R8	110 Ω
D1, D2	IN4007

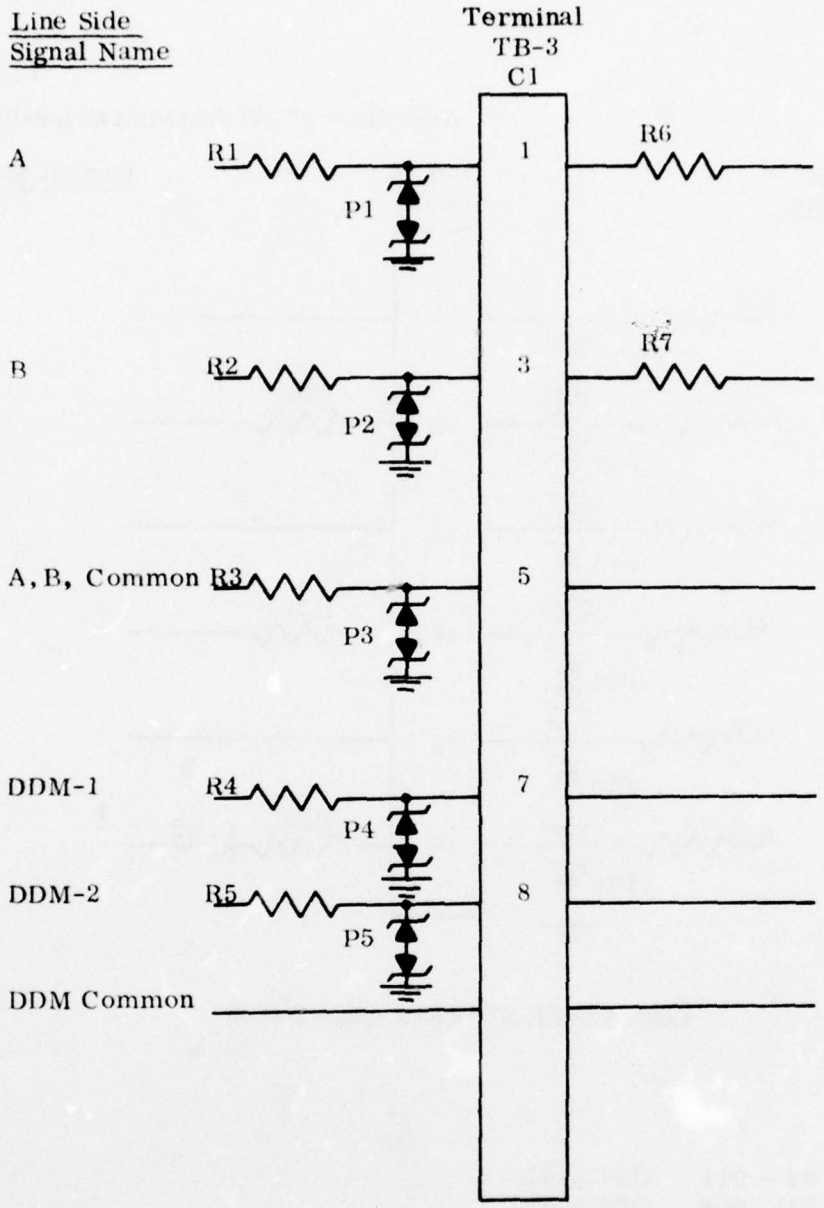

FAR FIELD MONITOR 917102-1
(See TI 6750.71, figure 4-2, for drawing)

Parts:

R1 - R5	56 Ω
R6, R7	39 Ω
P1 - P3	GZ41116L
P4 - P5	GZ41115Q

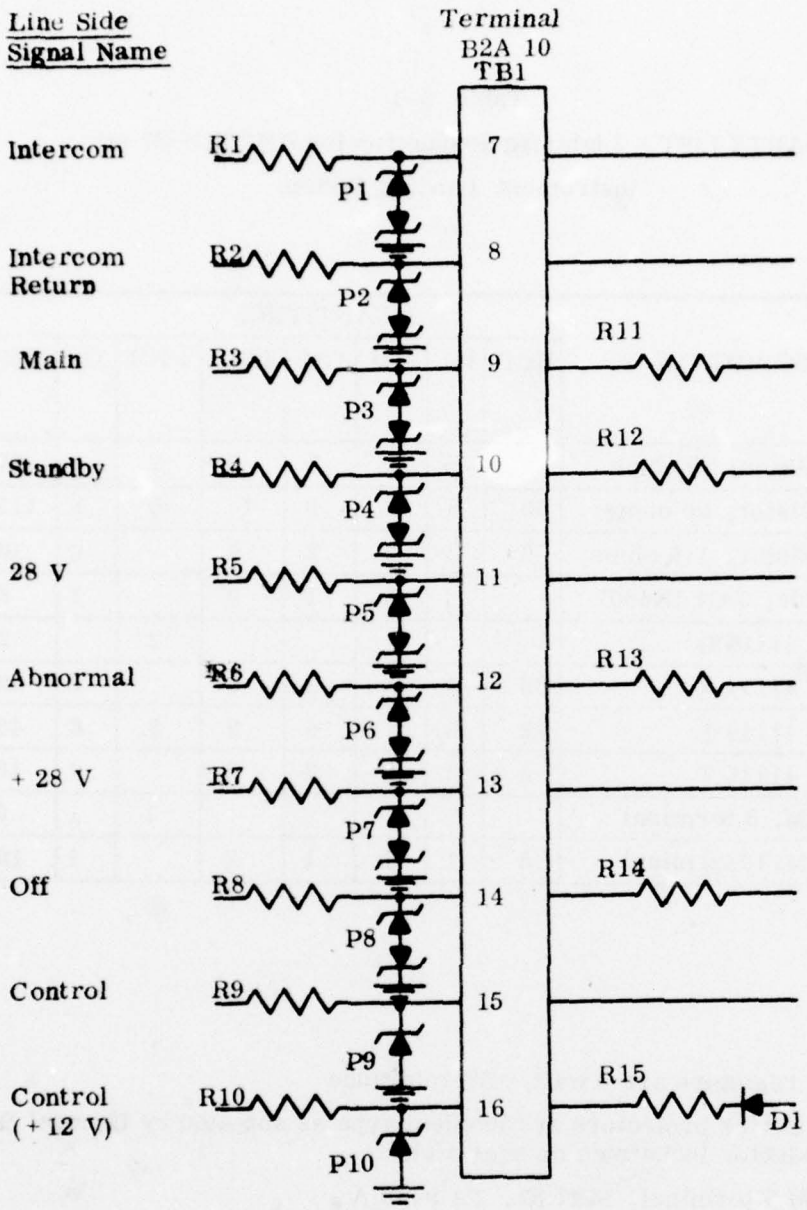

GLIDE SLOPE STATION (Single frequency) 909977-1
(See TI 6750.69 pages 4-49, 4-50, cable list,)

Parts:			
R1, R2	110 Ω	R11 - R15	39 Ω
R3 - R10	56 Ω		
P1 - P2	GZ41116T	P9, P10	GZ41114X
P3 - P8	GZ41116L		

Fig 5 GRN-27

Table 5-1

PARTS LIST - Lightning Protection for AN/GRN-27 (v)

Instrument Landing System

ITEM No.	DESCRIPTION	QUANTITIES							
		RCP	IM	MM	OM	LOC	FFM	GS	Total
1	Resistor, 30 ohms		5	5	5	5	2	5	27
2	Resistor, 56 ohms	60	8	8	8	14	5	8	111
3	Resistor, 110 ohms	6	2	2	2	2		2	16
4	Diode, JAN 1N4007		1	1	1	2		1	6
5	GZ 41115 Q						2		2
6	GZ 41114 X	36	2	2	2	5		2	49
7	GZ 41116 L	12	6	6	6	9	3	6	48
8	GZ 41116 T	6	2	2	2	2		2	16
9	LPM, 5 terminal						1	1	2
10	LPM, 10 terminal	6	1	1	1	2		1	12

Notes:

1. All resistors are 2 watt, ±5% tolerance
2. GZ Series protectors are leadless type as supplied by General Semiconductor Industries or equivalent
3. LPM 5 terminal, Part No. FA 9455 A

   LPM 10 terminal, Part No. FA 9455 B

Section 6

Lightning Protection Requirements for the Mark III Instrument Landing System, (Category III).

Units Affected	Part No.	ILS Set
Localizer Station	916467-2	A
Localizer Maintenance Monitor	924973-1	E-3
Glide Slope Station (Capture Effect)	916469-1	B
Glide Slope Maintenance Monitor	925004-1	E-3
Far Field Monitor (Including Maintenance Monitor)	924930-1 924972-1	C E-3
Marker Beacon Stations	916110-2	D
Remote Control Panel	916322-1	E-1
Maintenance Monitor Status Panel	925957-1	E-3

The part members and ILS Set designations are from Texas Instrument Instruction Books provided by T.I. Equipment Group, 13500 North Central Expressway, Dallas, Texas 75222. In addition to the specific equipment hand books, see also Report No. FAA-RD-75-73, February 1975, FAA Lightning Protection Study: Lightning Protection requirements for Mark III Instrument Landing System (Category III), for additional details.

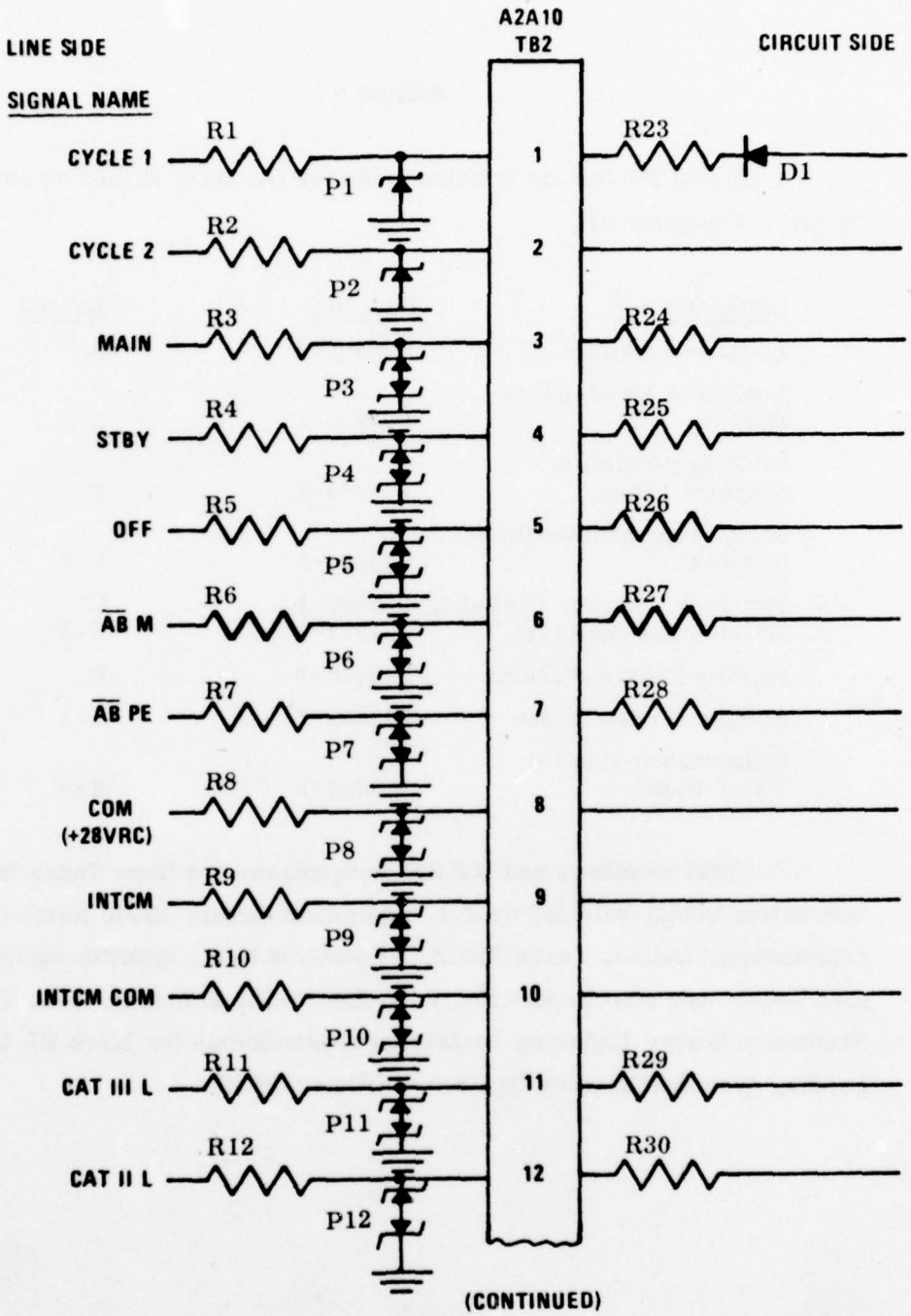

LOCALIZER STATION 916467-2 (page 1 of 2)
(See Localizer Station, HB03-EG74, 30 June 1971
with change dated 31 May 1974, Figure 12-37,
page 12-113, for schematic)

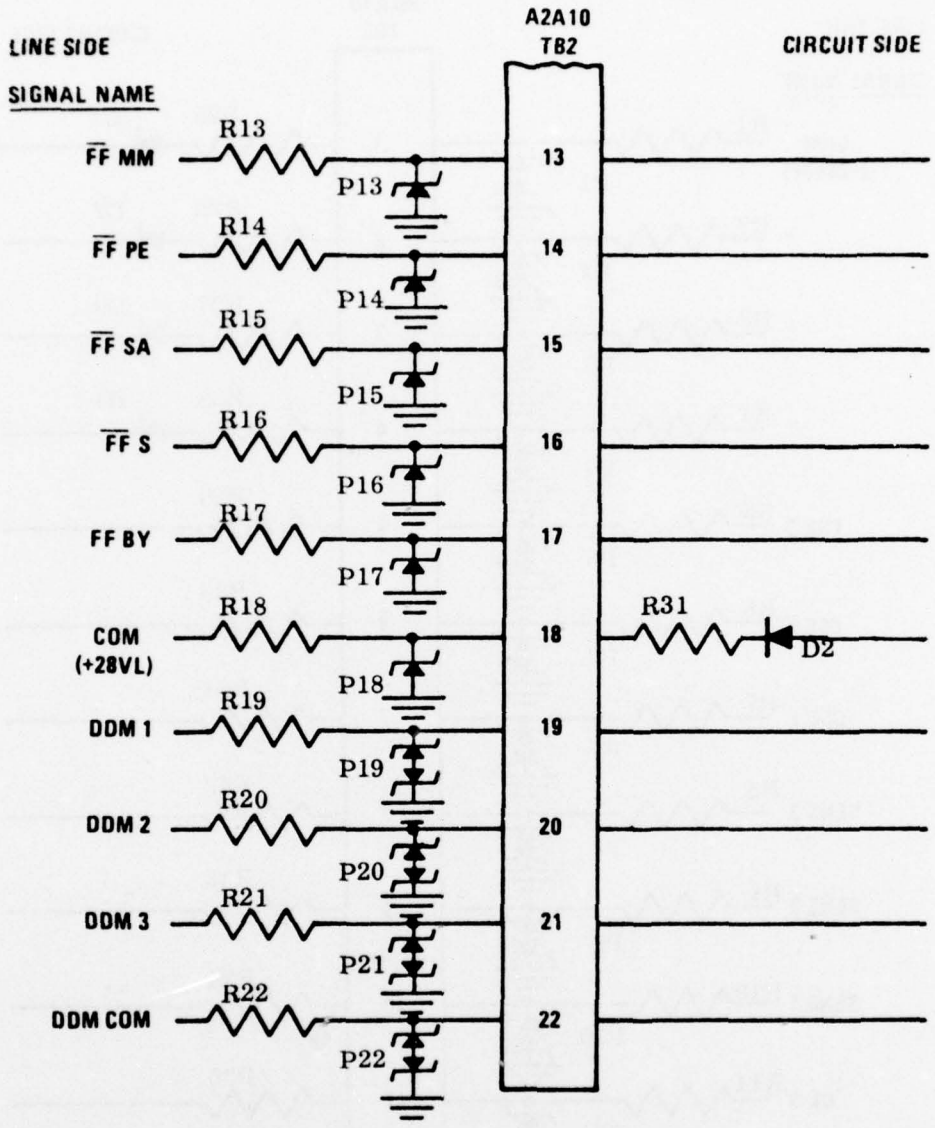

LOCALIZER STATION 916467-2 (page 2 of 2)

Parts:

R1 - R8, R11 - R23, R31	56 Ω
R9, R10	110 Ω
R24 - R30	39 Ω
P1, P2, P13 - P18	GZ41114X
P3 - P8, P11, P12, P19 - P22	GZ41116L
P9, P10	GZ41116T
D1, D2	IN4007

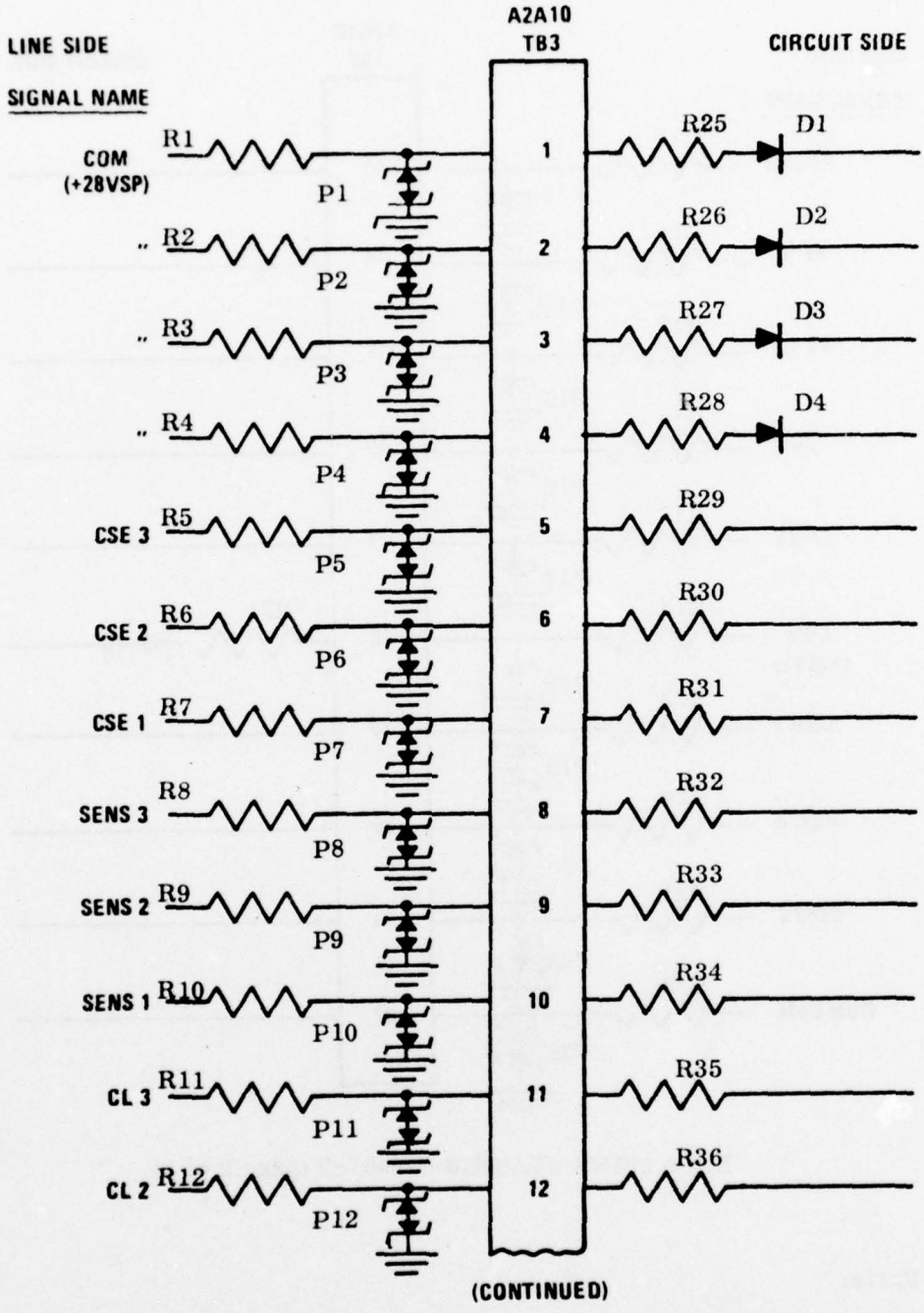

LOCALIZER MAINTENANCE MONITOR 924973-1 (page 1 of 2)
(See Maintenance Monitor Handbook, 30 June 1971, Figure 12-8, page 12-17 for schematic)

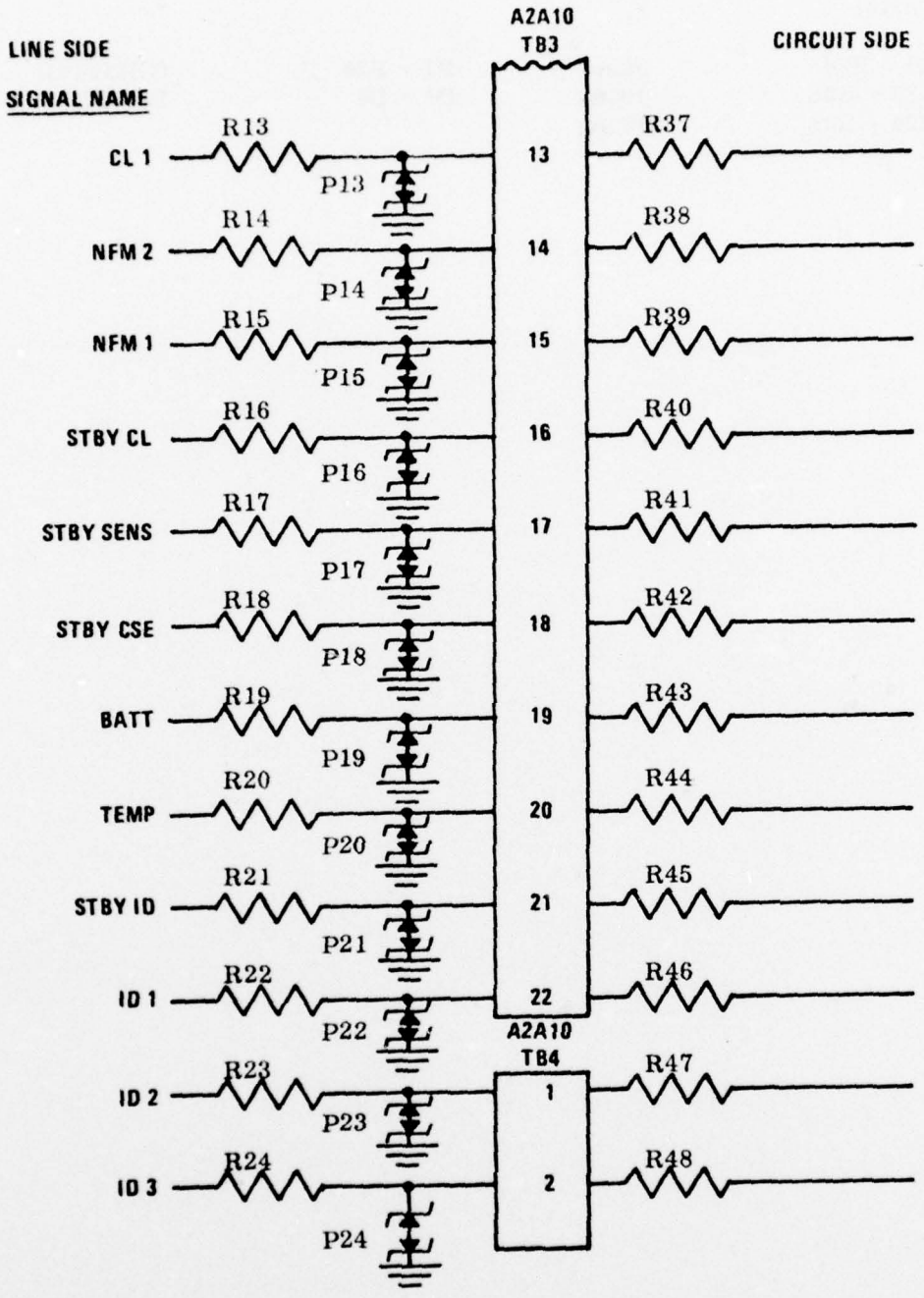

LOCALIZER MAINTENANCE MONITOR 924973-1 (page 2 of 2)

Parts:

R1 - R24	56Ω	P1 - P24	GZ41116L
R25 - R28	10Ω	D1 - D4	IN4007
R29 - R48	39Ω		

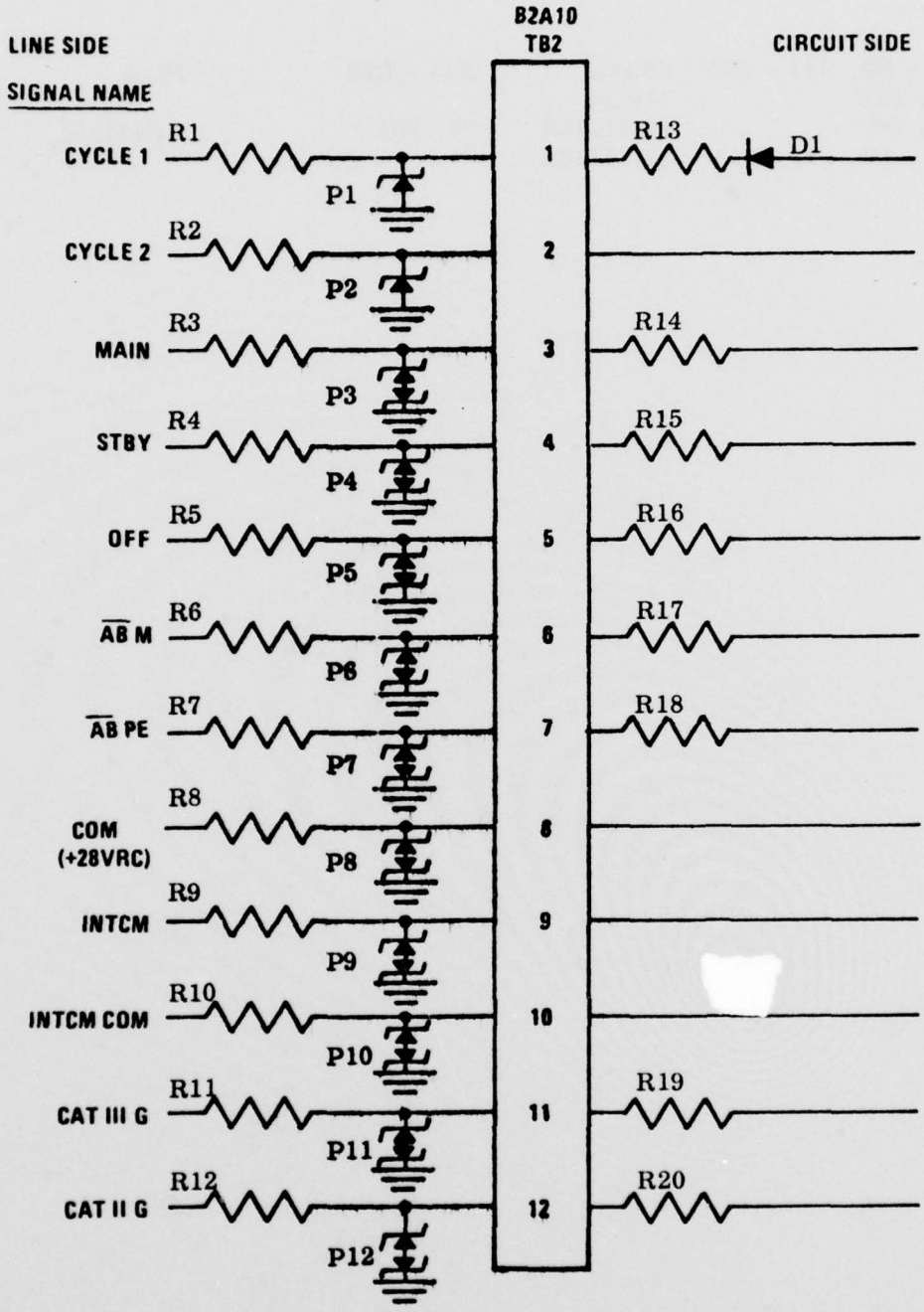

GLIDE SLOPE STATION (CAPTURE EFFECT) 916469-1
(See HB03-EG74, 30 June 1971, with changes dated
31 May 1974, figure 12-37, p. 12-113 for schematic)

Parts:

R1 - R8, R11 - R13	56Ω	R14 - R20	39Ω
R9, R10	110Ω		
P1, P2	GZ41114X	P9, P10	GZ41116T
P3 - P8, P11, P12	GZ41116L		

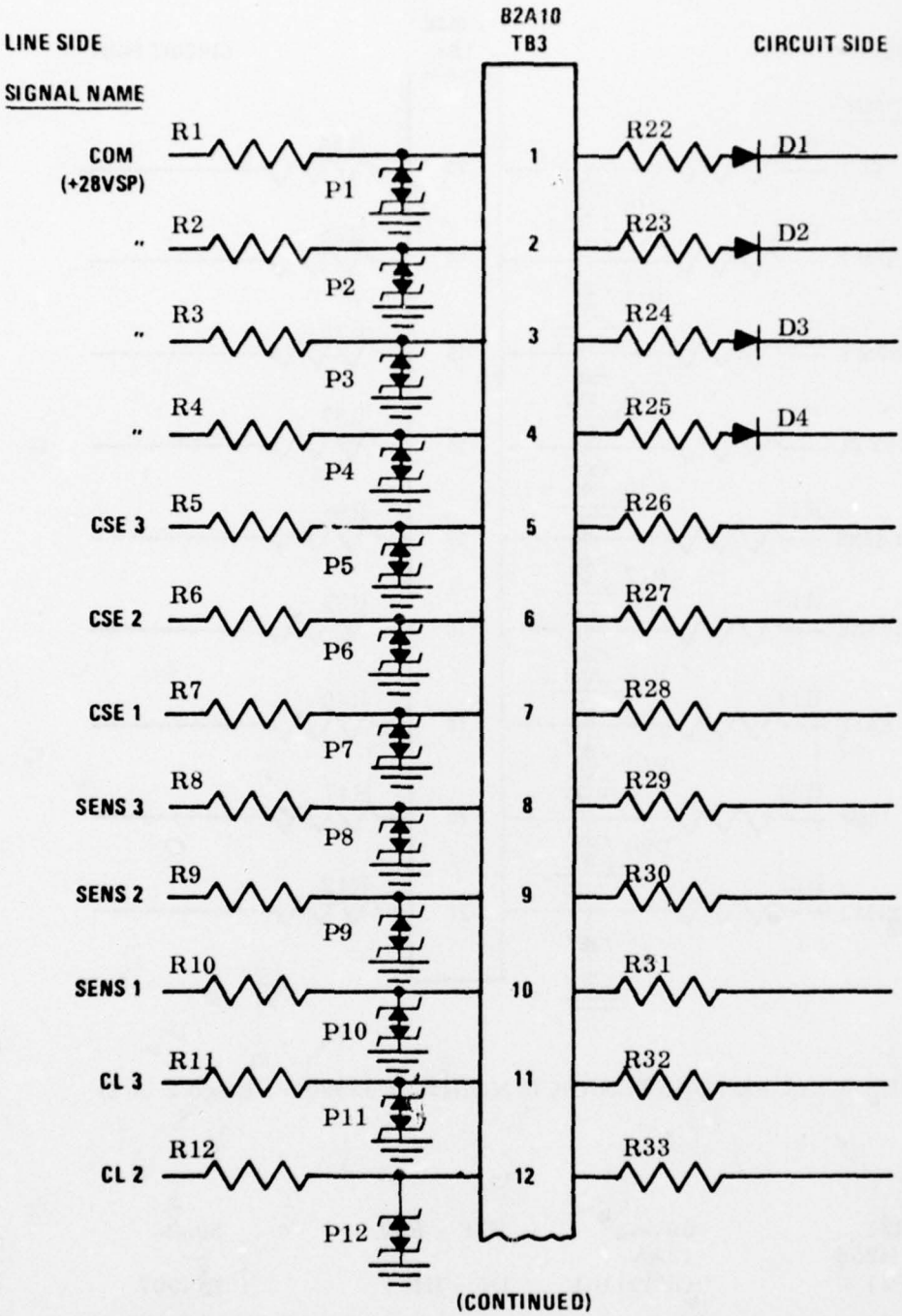

(CONTINUED)

GLIDE SLOPE MAINTENANCE MONITOR 925004-1 (page 1 of 2)
(See Maintenance Monitor Handbook, 30 June 1971
figure 12-9, p. 12-19, for schematic)

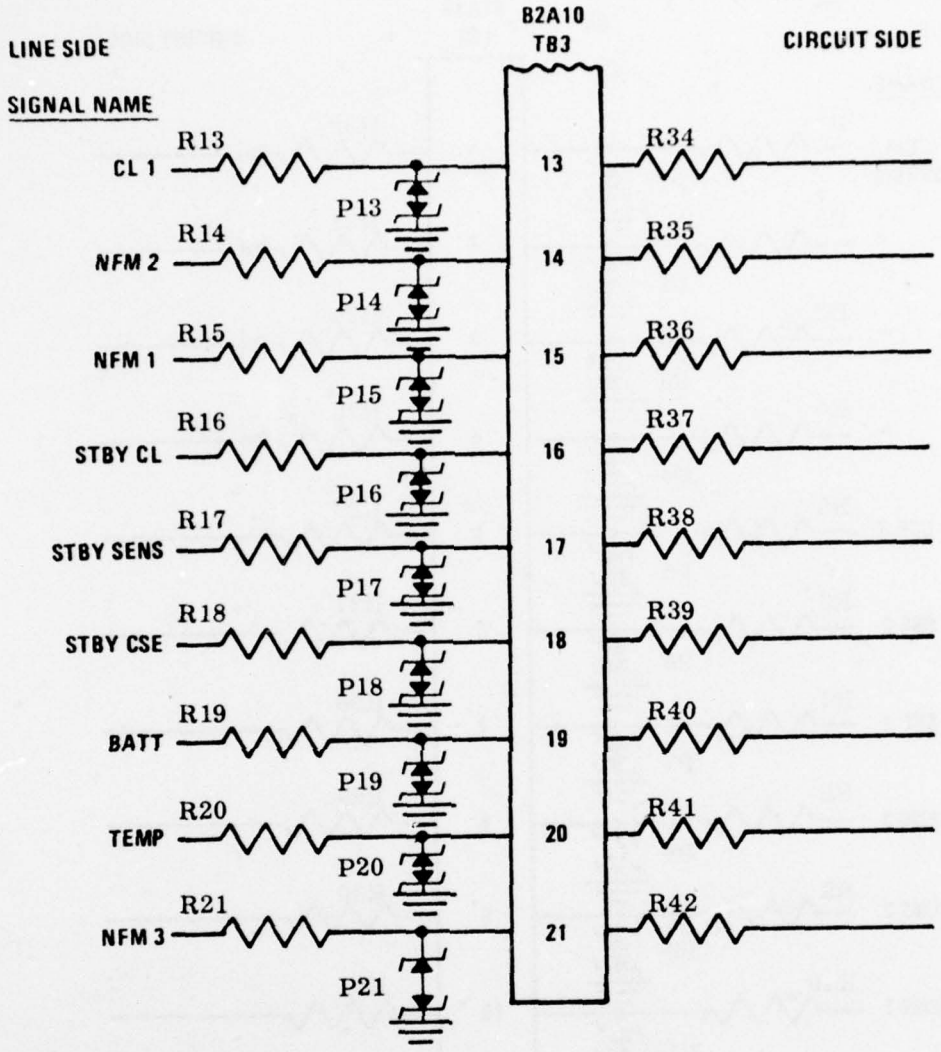

GLIDE SLOPE MAINTENANCE MONITOR 925004-1 (page 2 of 2)

Parts:

R1 - R21	56 Ω	R26 - R42	39 Ω
R22 - R25	10 Ω		
P1 - P21	GZ41116L	D1 - D4	IN4007

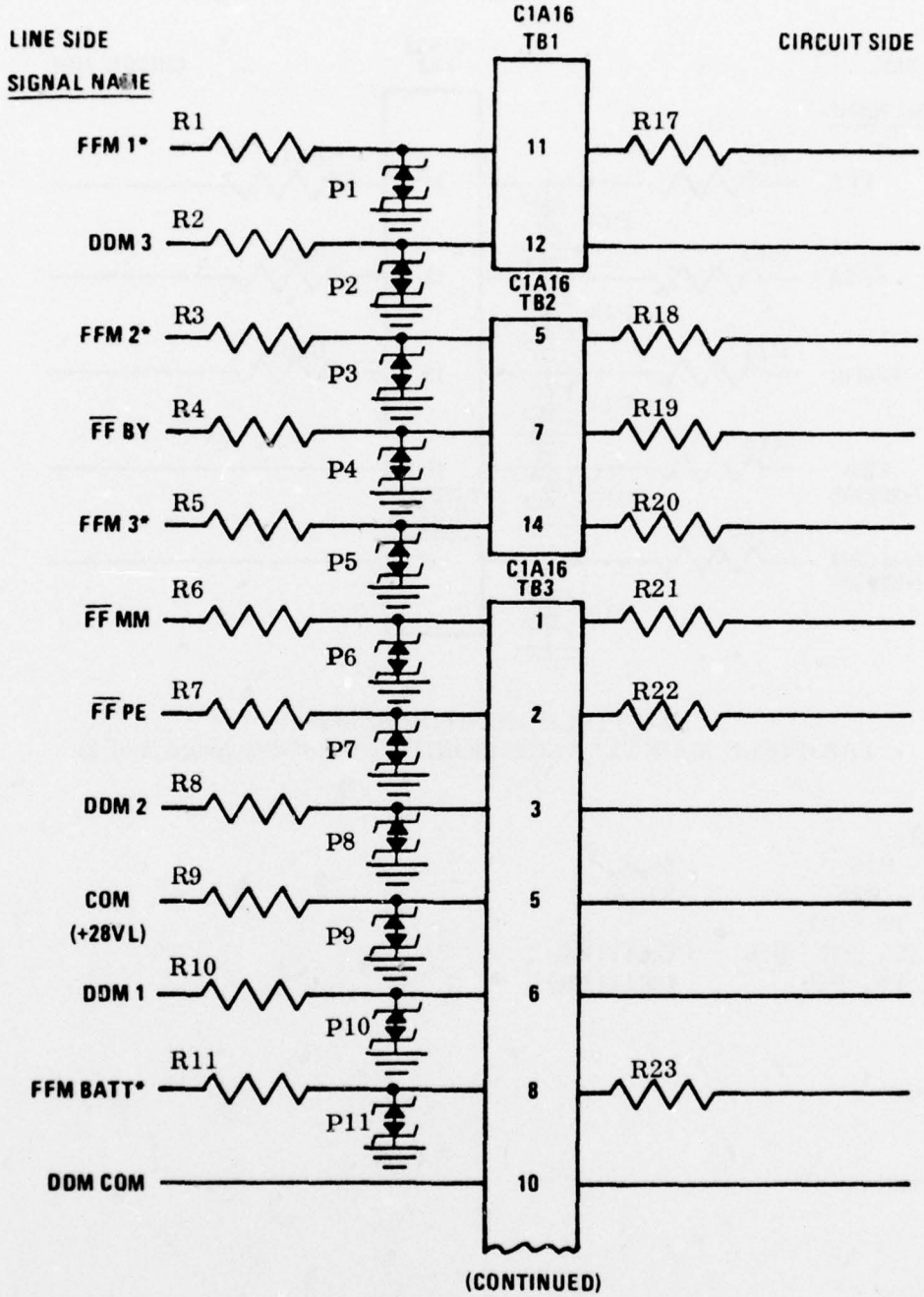

FARFIELD MONITOR 924930-1
FAR FIELD MONITOR-MAINTENANCE MONITOR 924972-1 (page 1 of 2)
(See Far Field Monitor, HB05-EG74, 30 June 1971
with changes dated 31 May 1974, figure 12-2, p. 12-21
and Maintenance Monitor Handbook, 30 June 1971,
figure 12-10, p. 12-21 for schematics)

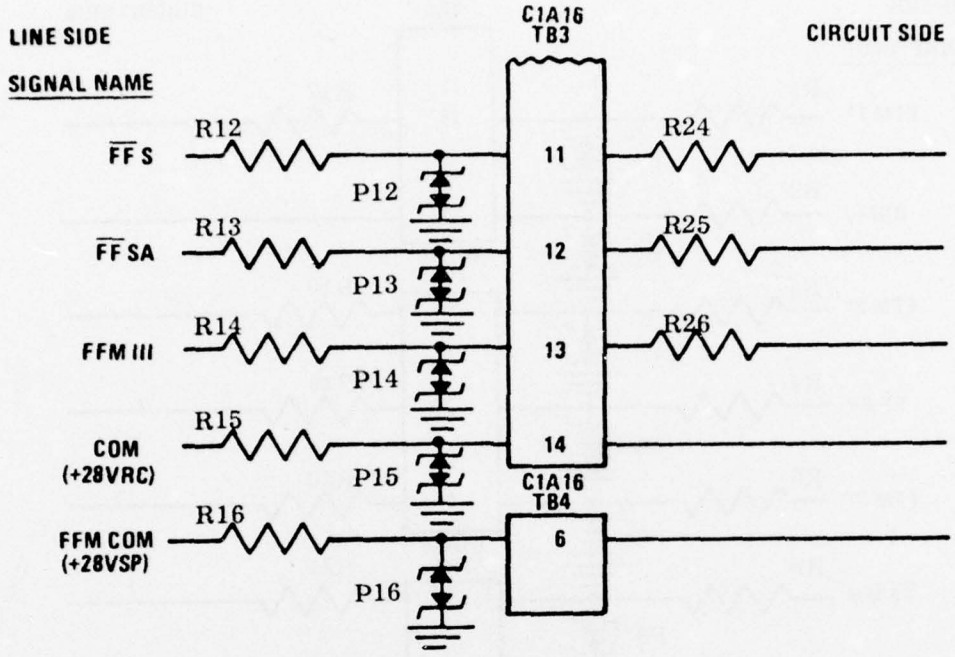

FAR FIELD MONITOR 924930-1
FAR FIELD MAINTENANCE MONITOR 924972-1 (page 2 of 2)

Parts:

R1 - R16	56Ω
R17 - R26	39Ω
P1, P3 - P7, P9, P11 -P16	GZ41116L
P2, P8, P10	GZ41115Q

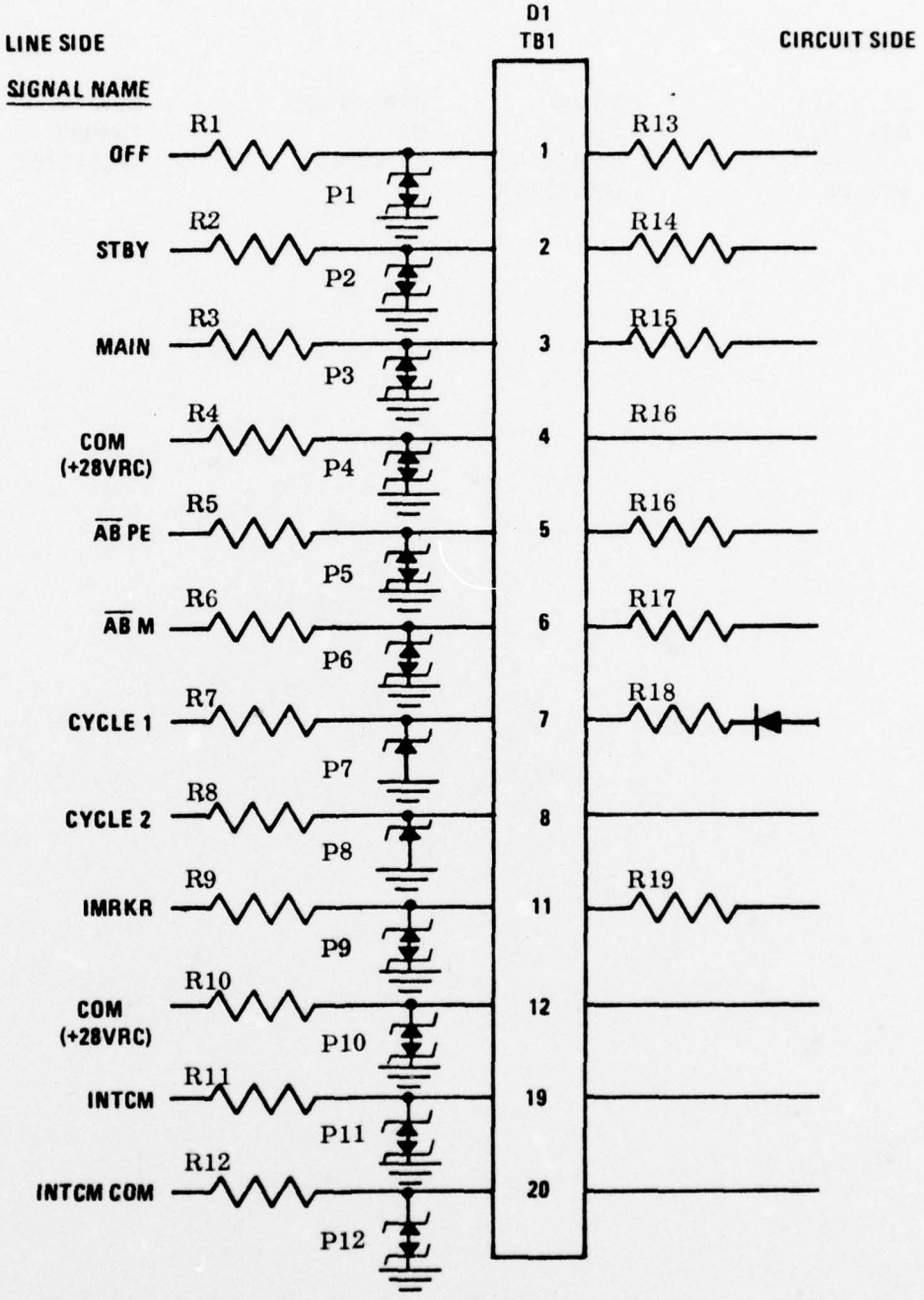

NOTE: PROTECTION SHOWN HERE FOR INNER MARKER. ALSO APPLIES TO MIDDLE AND OUTER MARKERS.

MARKER BEACON STATION 916110-2
(See Marker Beacon Station, HB70-EG74, 31 October 1974, figure 12-2, p. 12-5, for schematic)

Parts:

R1 - R10	56Ω	R13 - R19	39Ω
R11, R12	110Ω	D1	IN4007
P1 - P6	GZ41116L	P11, P12	GZ41116T
P7, P8	GZ41114X		

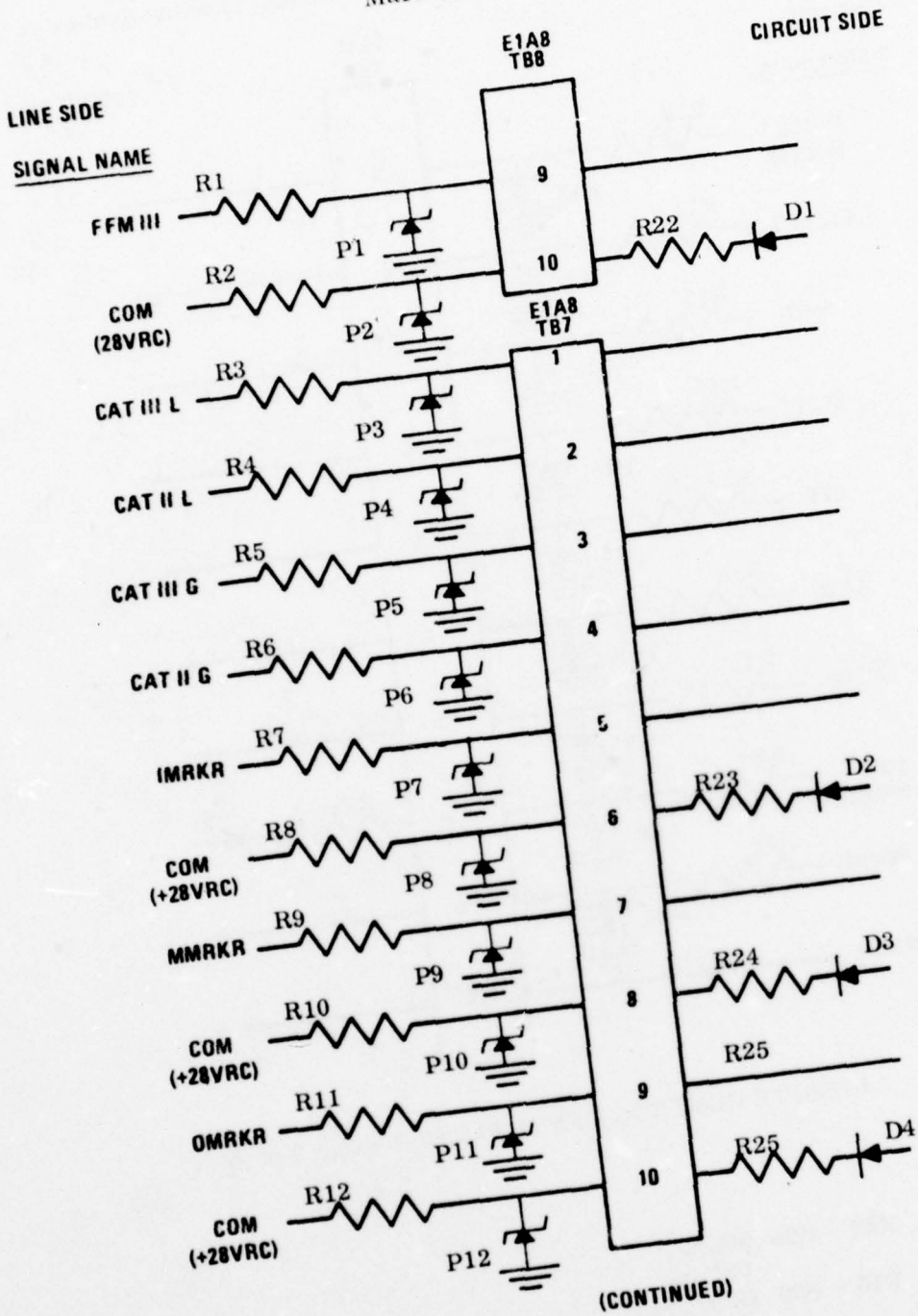

REMOTE CONTROL PANEL 916322-1 (page 1 of 2)
(See Remote Control Indicator and Monitor Panel,
HB06-EG74, 30 June 1971, with changes dated 31 May 1974,
figure 12-2, p. 12-11 for schematic)

Note: Protection shown for TB-6 (page 2 of 2) also applies to TB1 - TB5

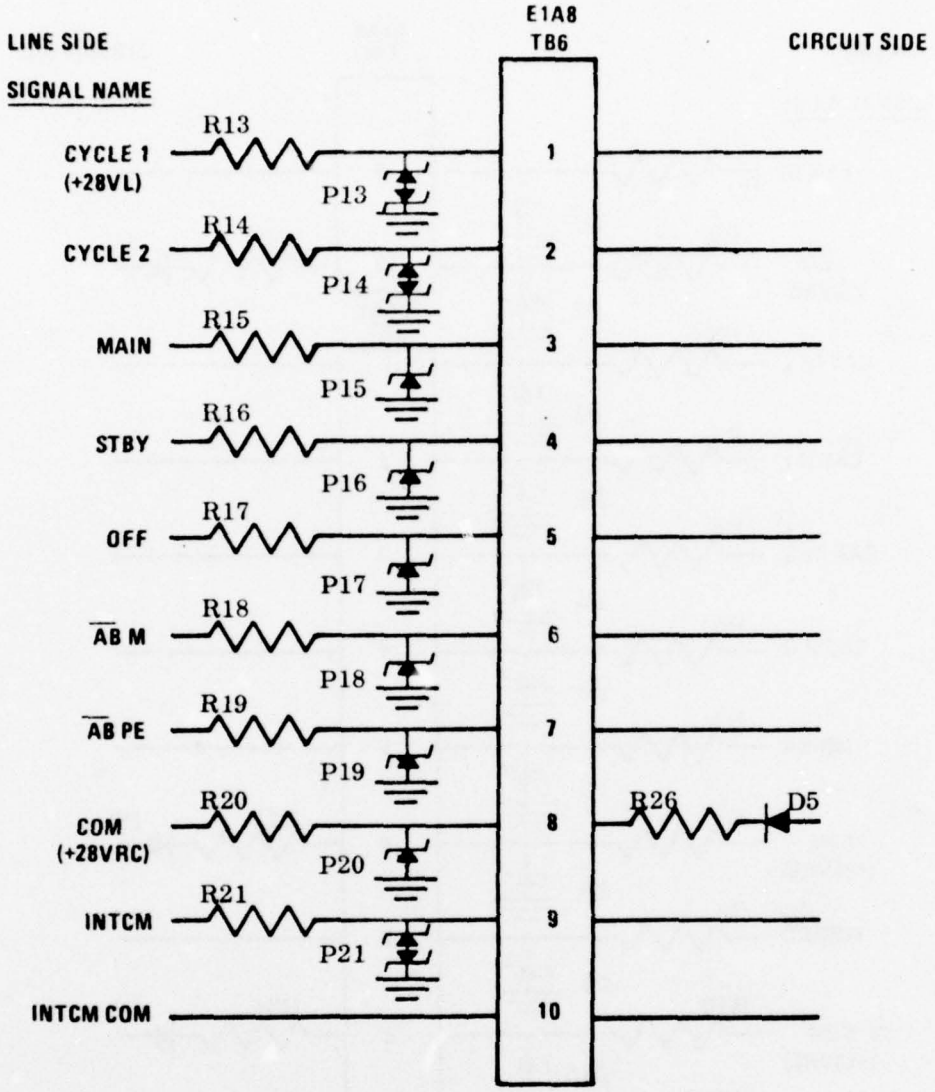

REMOTE CONTROL PANEL 916322-1 (page 2 of 2)

Parts:

R1 - R20, R22 - R26	56Ω
R21	110Ω
P1 - P12, P15 - P20	GZ41114X
P13, P14	GZ41116L
P21	GZ41116T
D1 - D5	IN4007

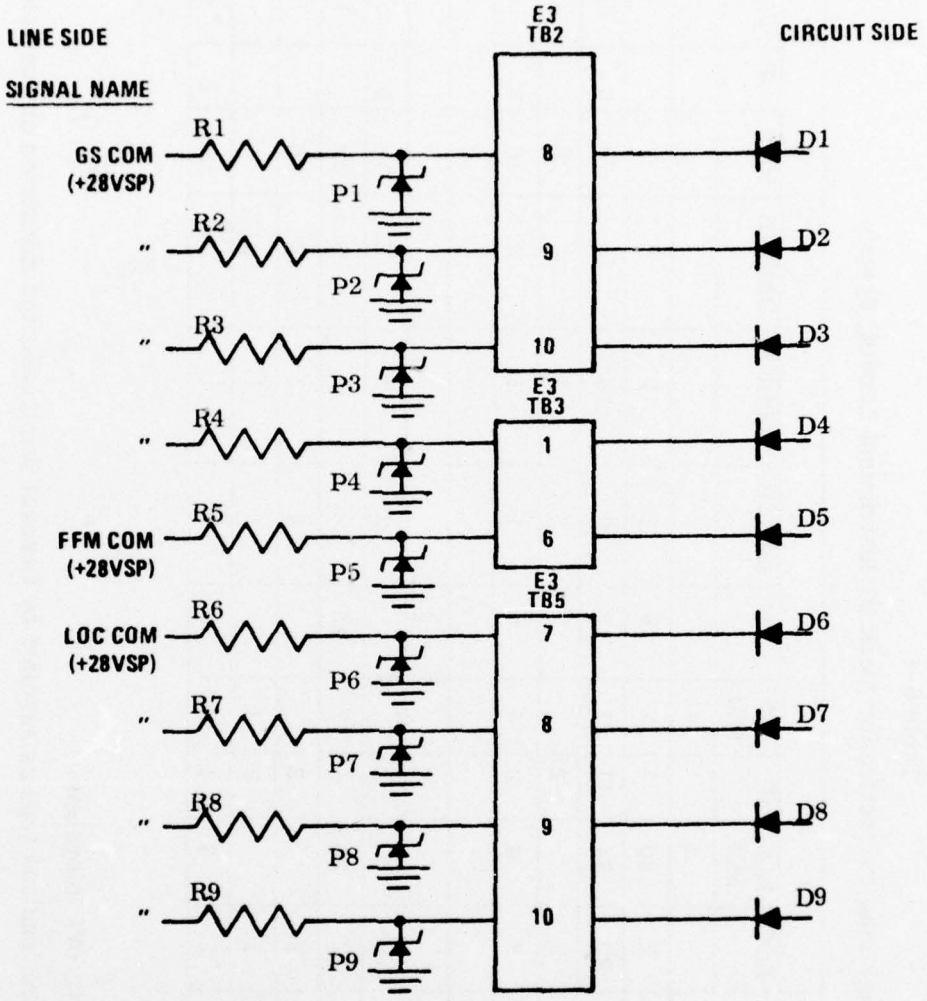

NOTE: SIGNAL LINES NOT SHOWN ABOVE REQUIRE NO PROTECTION SINCE TRANSISTOR SWITCH CIRCUITS CONNECTED TO THEM ARE PROTECTED INTERNALLY BY DESIGN.

MAINTENANCE MONITOR STATUS PANEL 925957-1
(See Maintenance Monitor Handbook, 30 June 1971, figure 12-11, p. 12-23 for schematic)

Parts:

R1 - R9	56Ω
P1 - P9	GZ41114X
D1 - D9	IN4007

Table 6-1

PARTS LIST - Lightning Protection for Mark III Instrument Landing System

ITEM No.	DESCRIPTION	LOC	LOC MM	GS	GS MM	FFM	IMRKR	MMRKR	OMRKR	RCP	SP	Totals
1	Resistor, 10 ohms		4		4							8
2	Resistor, 39 ohms	7	20	7	17	10	7	7	7			82
3	Resistor, 56 ohms	22	24	11	21	16	10	10	10	70	9	203
4	Resistor, 110 ohms	2		2			2	2	2	6		16
5	Diode, JAN 1N4007	2	4	1	4		1	1	1	10	9	33
6	Diode, JANTX 1N3612									2		2
7	GZ 41115 Q					3						3
8	GZ 41114 X	8		2			2	2	2	48	9	73
9	GZ 41116 L	12	24	8	17	13	8	8	8	12		110
10	GZ 41116 T	2		2			2	2	2	6		16
11	LPM, 5 terminal	1		1	1		1	1	1			6
12	LPM, 10 terminal	2	3	1	2	2	1	1	1	18	1	33

Notes:

1. All resistors are 2 watt, +5% tolerance
2. GZ Series protectors are leadless type as supplied by General Semiconductor Industries or equivalent
3. LPM 5 terminal, Part No. FA 9455 A
   LPM 10 terminal, Part No. FA 9455 B

Section 7

Runway Visual Range (RVR) Equipment*

RVR installations surveyed contained equipment groups manufactured by several companies. Transmissometer groups were largely from Winslow Teletronics or Applied Science Industries while the data processing groups were either Tasker Industries or Solid State Radiations. In many cases equipments were intermingled. In the latter case especially, circuits used by both manufacturers are either identical or quite similar and only the most vulnerable of the two is treated; protection of either component to the level shown is considered adequate.

In the case of the Projector Power Supply, vulnerability is dependant on the constant voltage device used. The ERA "Transpac", a solid state unit, is considered vulnerable, the directly interchangeable "Sola" constant voltage transformer is not.

* Report No. FAA-RD-75-181, December 1975

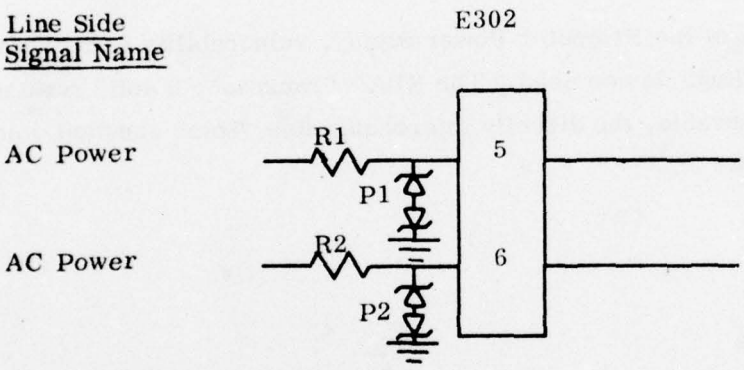

TRANSMISSOMETER PROJECTOR POWER SUPPLY

Note:
Considered Necessary only if T103 is Solid State device such as Transpac Model RT250W. Units containing SOLA constant voltage transformer not considered vulnerable

Parts:

R1, R2	147 Ω
P1, P2	GZ41117C

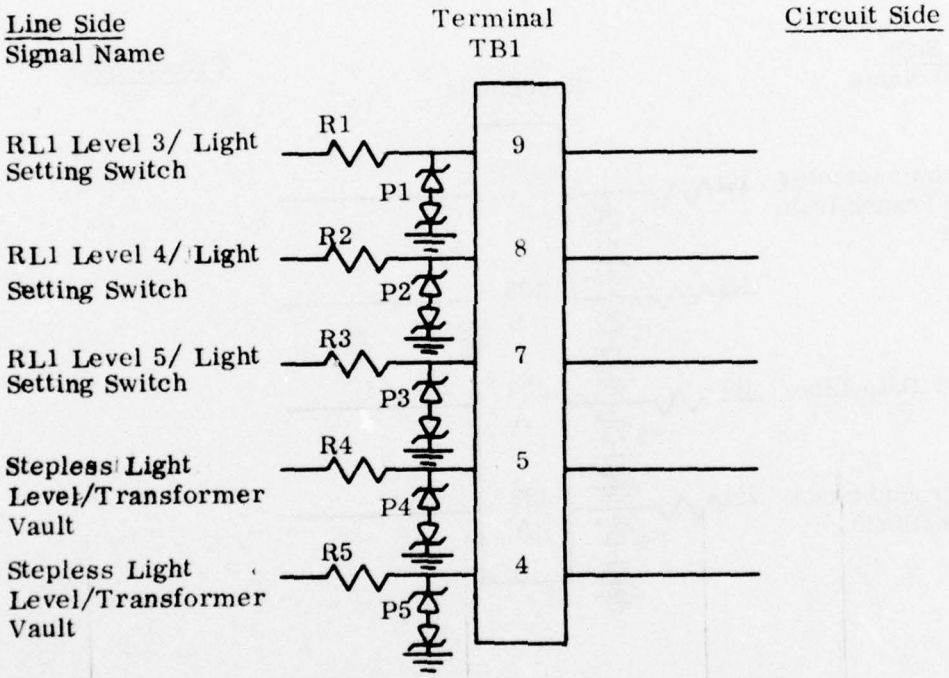

Runway Light Intensity Relay Chassis (FA7876)

Note:

For schematic, see instruction Book, Signal Data Converter Assembly for Runway Visual Range (RVR) System, Vol. II, figure 12-16, pages 12-31 and 32 (PT 6990.1)

Parts:

R1 - R5	147 Ω
P1 - P5	GZ41117C

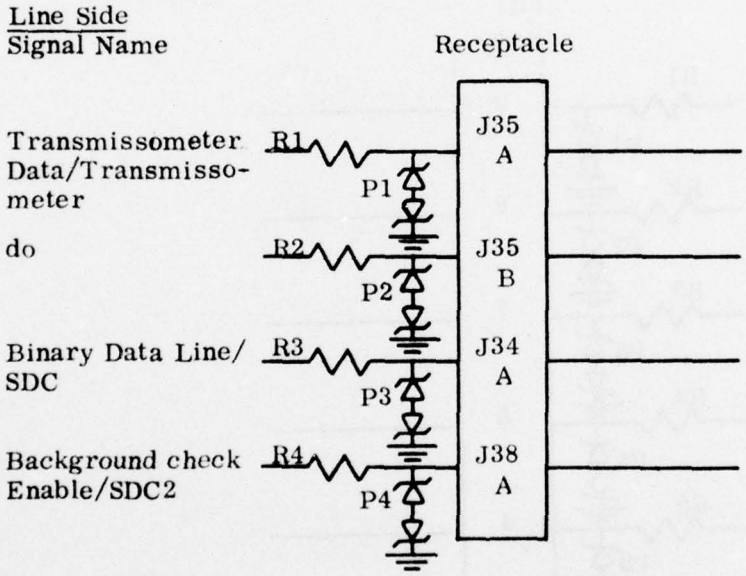

SIGNAL DATA CONVERTER (FA 7871)

Note:

1. For schematic, see Instruction Book, Signal Data Converter Assembly for Runway Visual Range (RVR) System, Vol. II, figures 21-21, page 12-41 and 12-25, page 12-57 (PT 6990.1)

Parts:

R1, R2	47 Ω	P1, P2	GZ41116M
R3	18 Ω	P3	GZ41116B
R4	15 Ω	P4	GZ41115Y

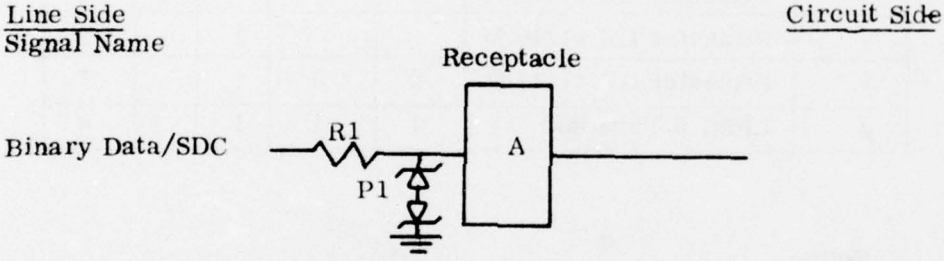

RECEIVER DECODER FA7873

Note:

For schematic, see Instruction Book, Signal Data Converter Assembly for Runway Visual Range (RVR) System, Vol. II, figure 12-24, page 12-55 (PT 6990.1)

Parts:

R1	18 Ω
P1	GZ41116B

Table 7-1

PARTS LIST - Lightning Protection for

Runway Visual Range (RVR) Equipment

ITEM No.	DESCRIPTION	QUANTITIES				
		TPPS	RLIRC	SDC	RD	Total
1	Resistor 15 Ω			1		1
2	Resistor 18 Ω			1	1	2
3	Resistor 47 Ω			2		2
4	Resistor 150 Ω	2	2			4
5	Protector GZ 41115 Y			1		1
6	Protector GZ 41116 B			1	1	2
7	Protector GZ 41116 M			2		2
8	Protector GZ 41117 C	2	5			7
9	LPM, 5 Terminal	1	1	1	1	4

Notes:

1. All resistors are 2 watt carbon, 5% tolerance
2. GZ Series protectors are leadless type as supplied by General Semiconductor Industries or equivalent
3. LPM 5 terminal, Part # FA 9455 A
   LPM 10 terminal, Part # FA 9455 B

Section 8

Lightning Protection Requirements for Signal Lines of the Automated Radar Terminal System III (ARTS III).*

Unit Affected

Demarcation Junction Box - Diagrams on the following pages of this section are in accordance with the cable identifications specified in figure 28 of ARTS III Typical Site Plan, Demarcation Junction Box Wiring Diagram of the ARTS III Beacon Tracking Level System Installation Planning (June 24, 1970).

* Report No. FAA-RD-75-70, April 1975.

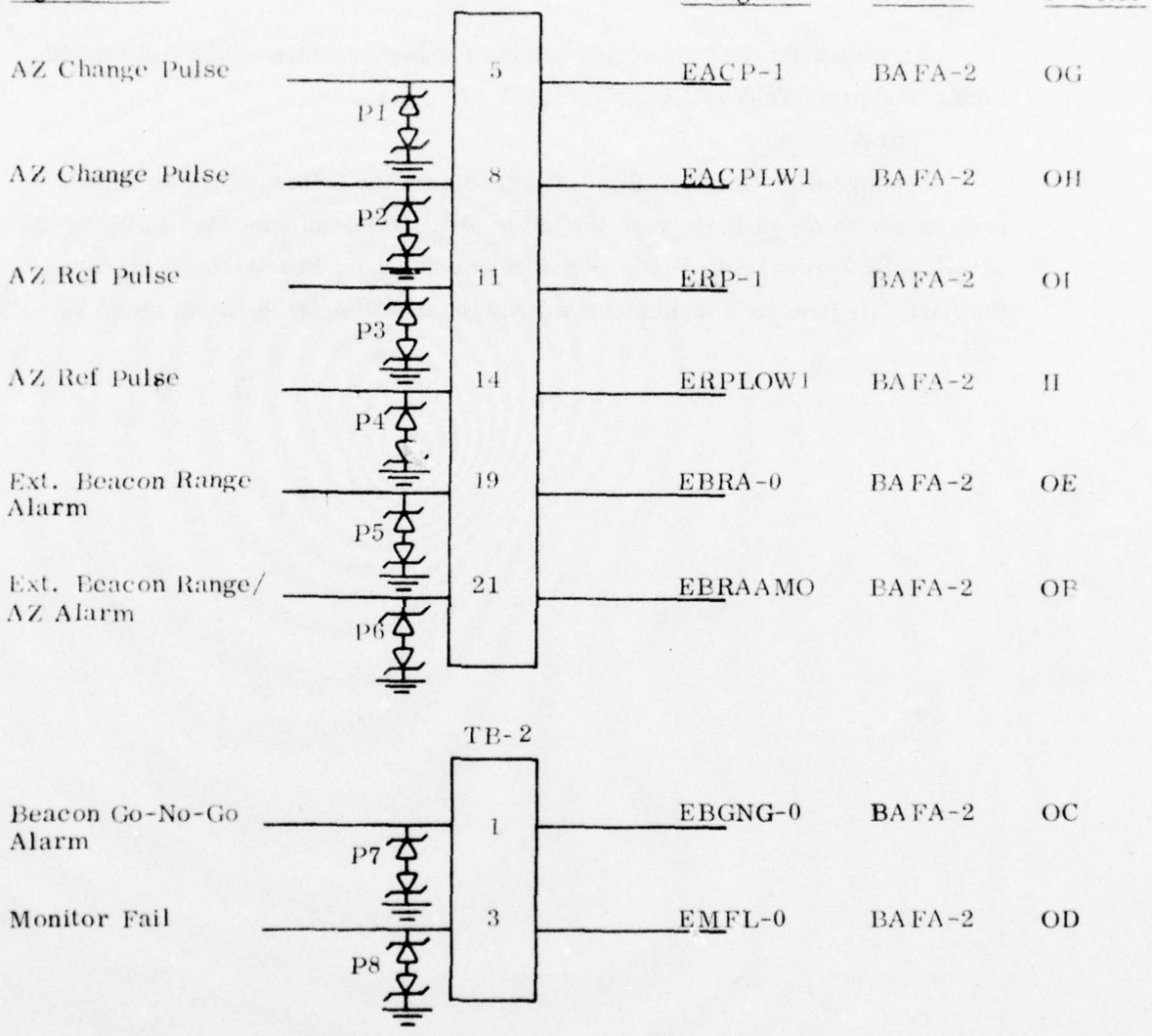

Parts:

P1	GZ41115V
P2 - P4	GZ41115X
P5 - P8	GZ41115Q

The following signals are carried by a control cable (type 7117303) between the DAS and Beacon Control Unit. No terminal board is presently available for placing protective devices. A type FA9455A LPM should be installed at each termination. The origins and destination of the wires are given in Table 2-18 DEC-Beacon Control Unit Cable Wiring Data of Technical Manual for ARTS III Data Processing Subsystem DPA(PX5895-0-2)(October Change 2).

	DAS					
Function	Signal Designation	Plug In Card	Pin	Origin	Destinction	Protection
Audio Alarm	EMUTE-0	BABA-6	OV	P1-F	P1-F	GZ41115Q
Failure	EFLDM-0	BABA-6	P1-H		P2-H	GZ41115Q

The following coaxial cables are routed through the Demarcation Nunction Box but not terminated in the box.

Cable ID Nos.	Function
33,96	Mixed Video and Trigger
35,97	Beacon Video
36,98	Beacon Trigger

The following coaxial cables are routed directly between DAS and Fixed Map Unit.

41	Ext. Test Video 2
43	Fixed Map Data Level

A coaxial Lightning Protection Module is under development. When available, details will be provided by a Change Order.

Parts List: Lightning Protection for the Automated Radar Terminal System III (ARTS III)

GZ41115V	1
GZ41115X	3
GZ41115Q	6
FA9455A (5 terminal LPM)	2
FA9455B (10 terminal LPM)	1

Section 9

Lightning Protection for Status and Control Lines of the Wilcox Mark I/D Instrument Landing System.*

Unit Affected	FAA Type No.	Manual (TI)
Localizer/Glide Slope Control Unit	FA 9355	6750.82
Glide Slope Monitor	FA 9370	6750.81
Localizer Monitor	FA 9357	6750.81
Glide Slope Transmitter	FA 9369	6750.79
Localizer Transmitter	FA 9353	6750.91
Localizer/Glide Slope RF Power Panel	FA 9356	6750.90
Localizer/Glide Slope Power Supply	FA 9354	6750.80
Glide Slope Monitor Combining Network	FA 9372	6750.78
Glide Slope Antenna	FA 9373	6750.83
Glide Slope Monitor Detector/Antenna	FA 9371	6750.78
Glide Slope Tower Tilt Monitor	FA 9378	6750.78
Localizer Antenna Array	FA 9358	6750.92

PRECEDING PAGE BLANK-NOT FILMED

* Report No. FAA-RD-77-102

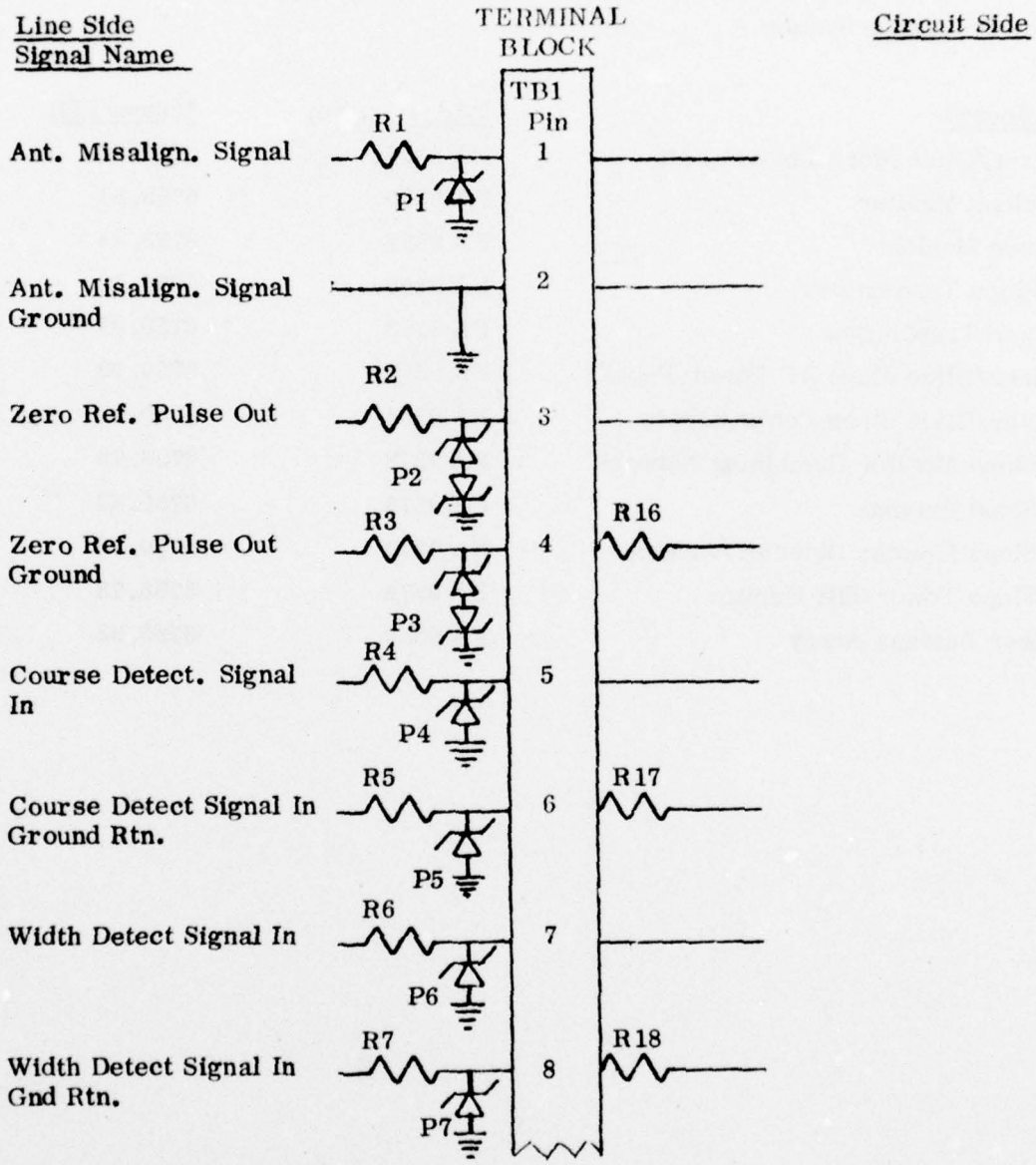

LOCALIZER STATION SHELTER (page 1 of 2)

(see TI 6750.90)

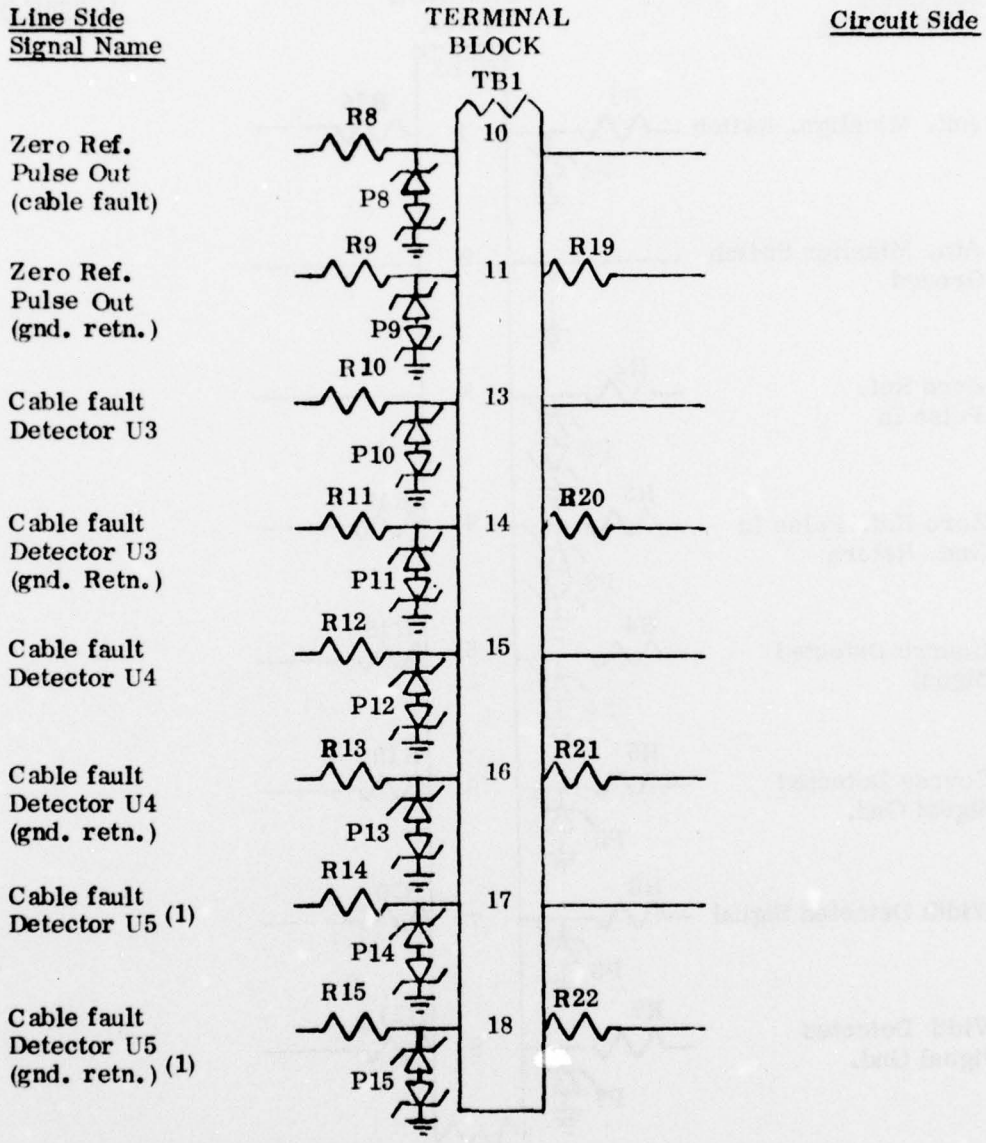

LOCALIZER STATION SHELTER (page 2 of 2)

Notes:
1. Install only if cable to antenna array is present and wired to monitor.
2. All resisters are 2 watt, 5%.

Parts			
R1	51Ω, (2)	P1	GZ41114Z
R2	33 Ω	P2	GZ41116H
R3, R9 - R16	10 Ω	P3, P9-P15	GZ41115Q
R4 - R7, R17, R18	15 Ω	P4-P7	GZ60316B
R8	20 Ω	P8	GZ41116A

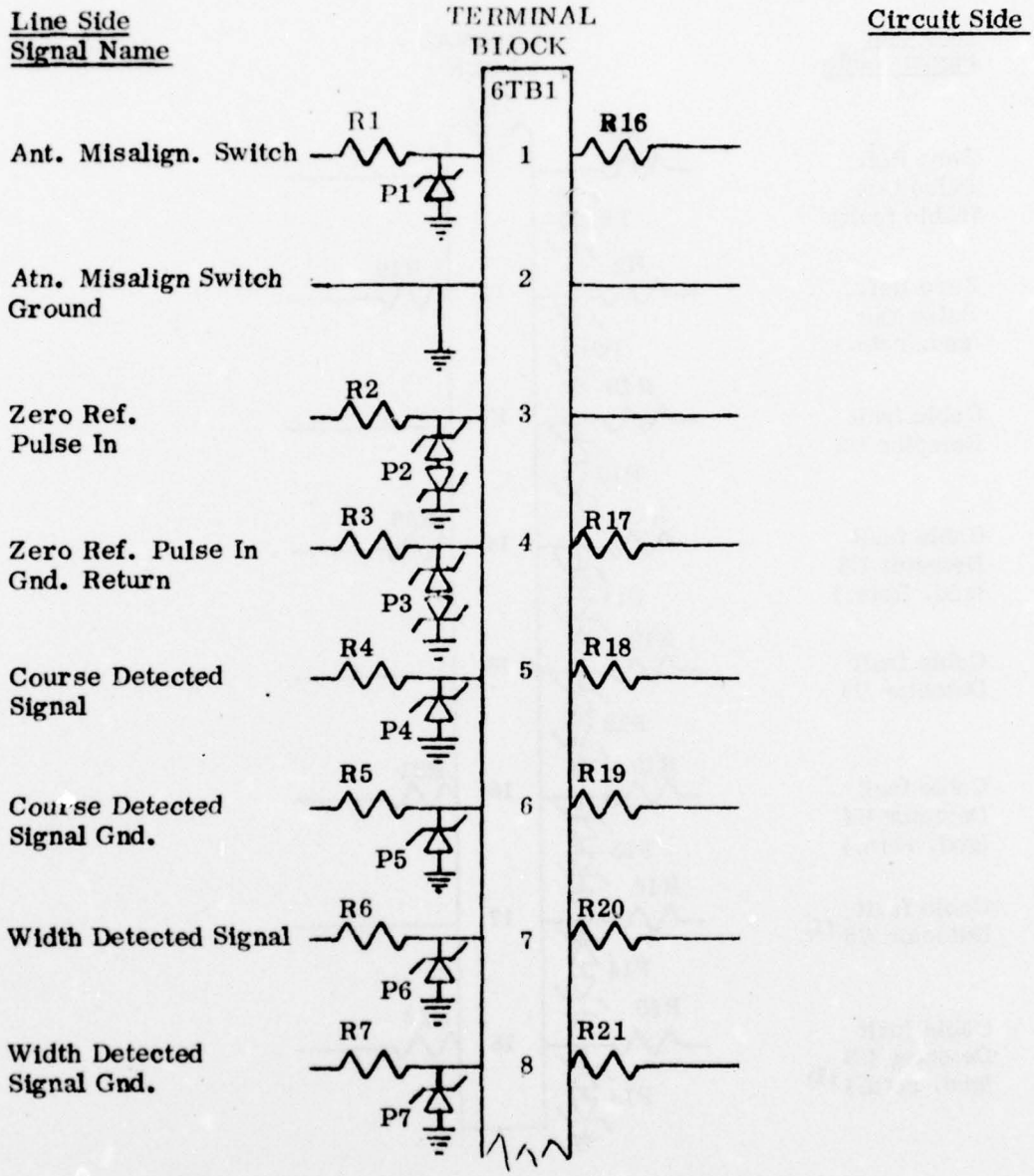

LOCALIZER STATION ANTENNA ARRAY FA 9358 (page 1 of 2)
(see TI 6750.92)

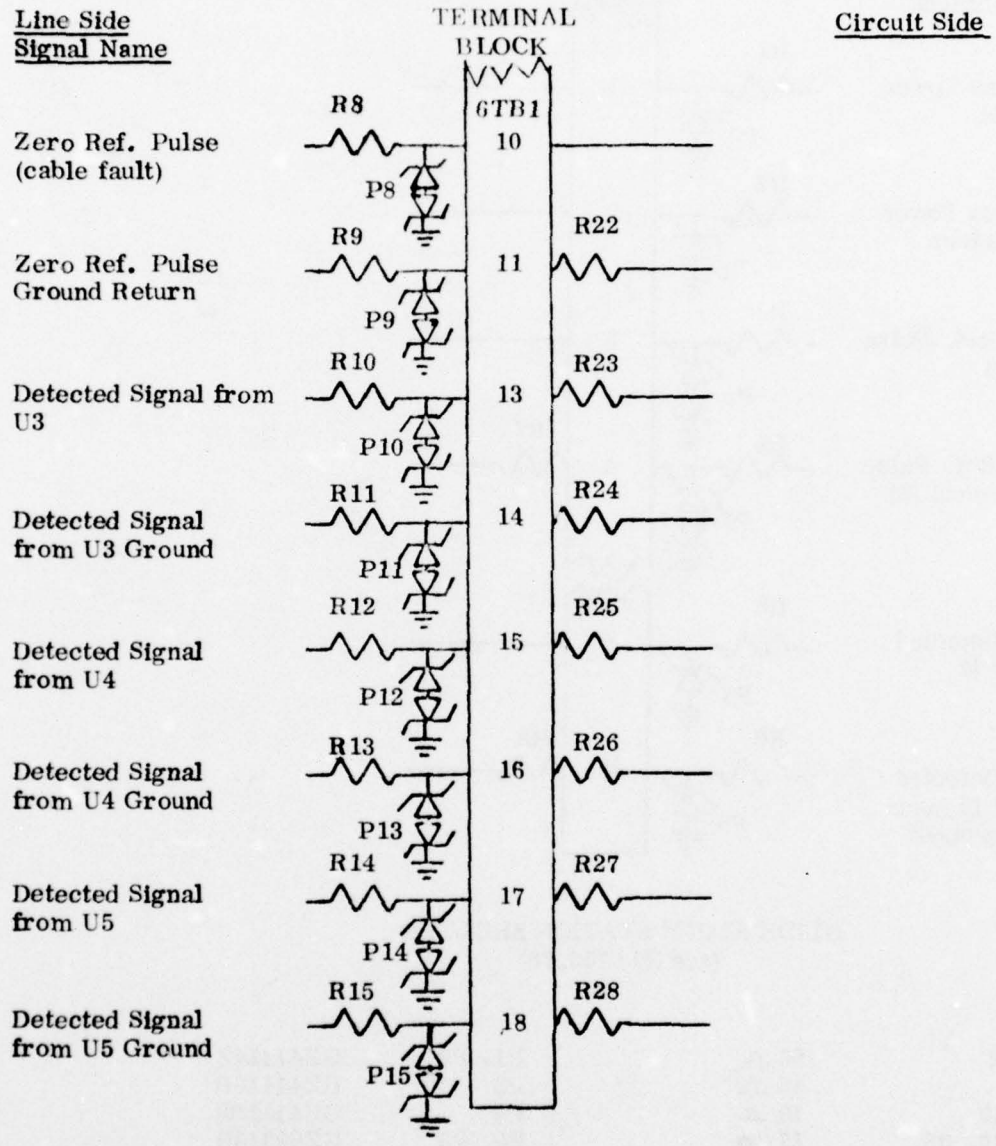

LOCALIZER STATION ANTENNA ARRAY FA 9358 (page 2 of 2)

Parts

R1, R16	56 Ω	P1	GZ41114Z
R2, R4-R8, R18-R21	15 Ω	P2, P8	GZ41115Y
R3, R9-R15, R17, R22-R28	10 Ω	P3, P9-P15	GZ41115Q
		P4-P7	GZ60316B

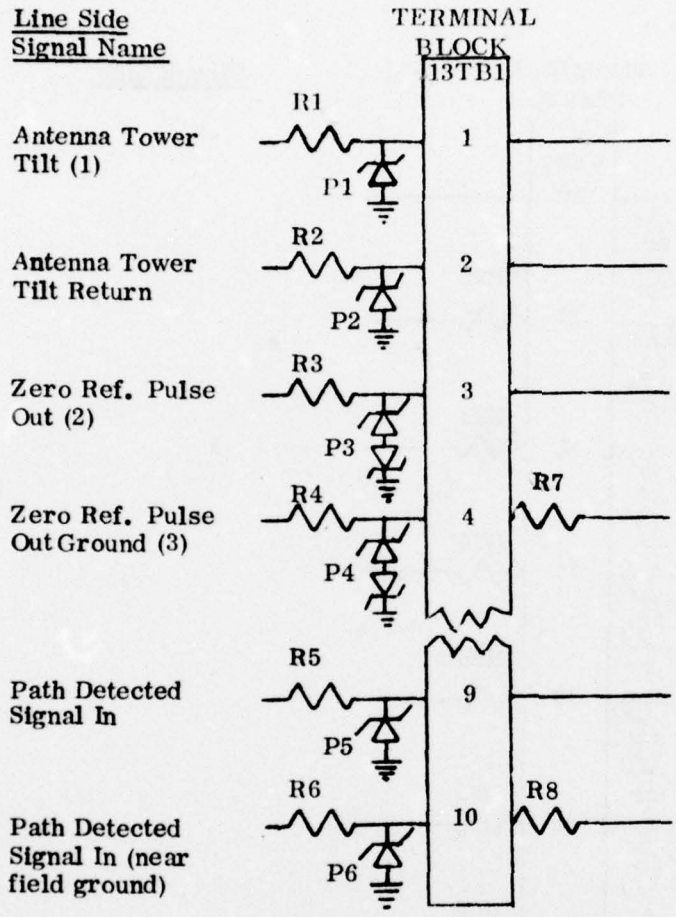

GLIDE SLOPE STATION SHELTER
(see TI 6750.78)

Parts

R1-R2	56 Ω	P1, P2	GZ41114Z
R3	33 Ω	P3	GZ41116H
R4, R7	10 Ω	P4	GZ41115Q
R5, R6, R8	15 Ω	P5, P6	GZ60316B

Notes:

1. Cable W9, shown in Figure 11-5 as a single lead shielded audio cable has been replaced with 3 wire twisted shielded audio cable. In this case, the black lead serves as the signal return to terminal 2. Protection remains the same.
2. Connections from Terminal 3 to Path Integral Detector U1 and Width Integral Detector U2 should be made from the protected side of R1 and not connected directly to the lines from the Monitor Detector/Antenna.
3. Ground Connections to U1 and U2 should be made between R2 and the Glide Slope Monitor and Not directly from Term 4.

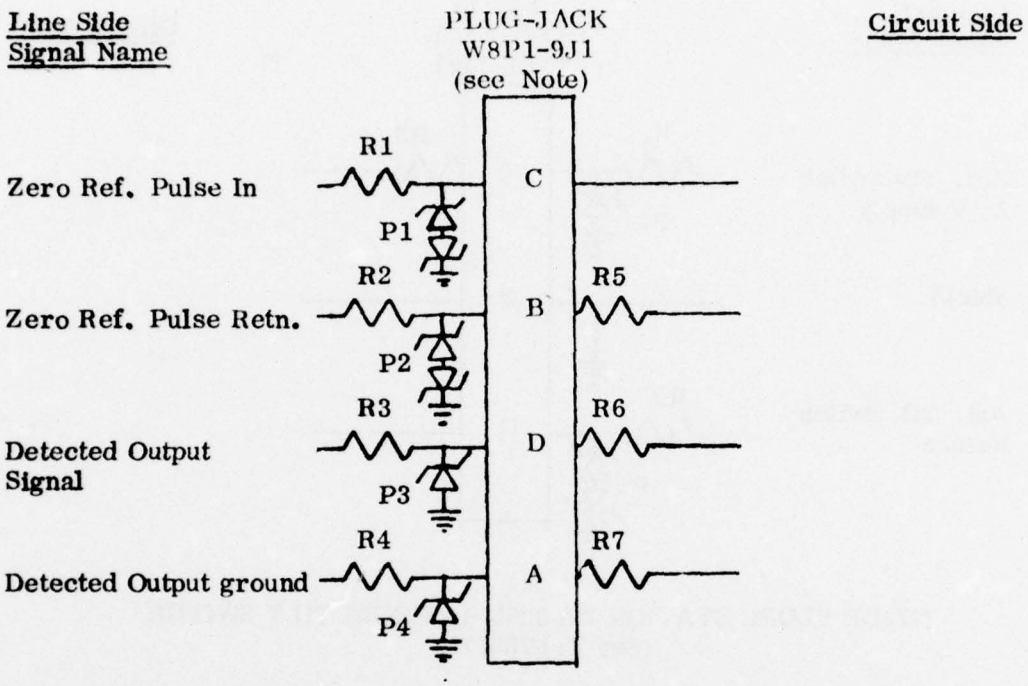

GLIDE SLOPE STATION MONITOR DETECTOR ANTENNA FA 9371
(see TI 6750.78)

Parts

R1, R3, R4, R6, R7	15 Ω	P1	GZ41115Y
R2, R5	10 Ω	P2	GZ41115Q
		P3, P4	GZ60316B

Note:
1. The protective devices shown here must be installed in a separate terminal block and junction box added between cable W8 and the plug-jack connector W8P1-9J1 at the Monitor Detector/Antenna Unit 9.

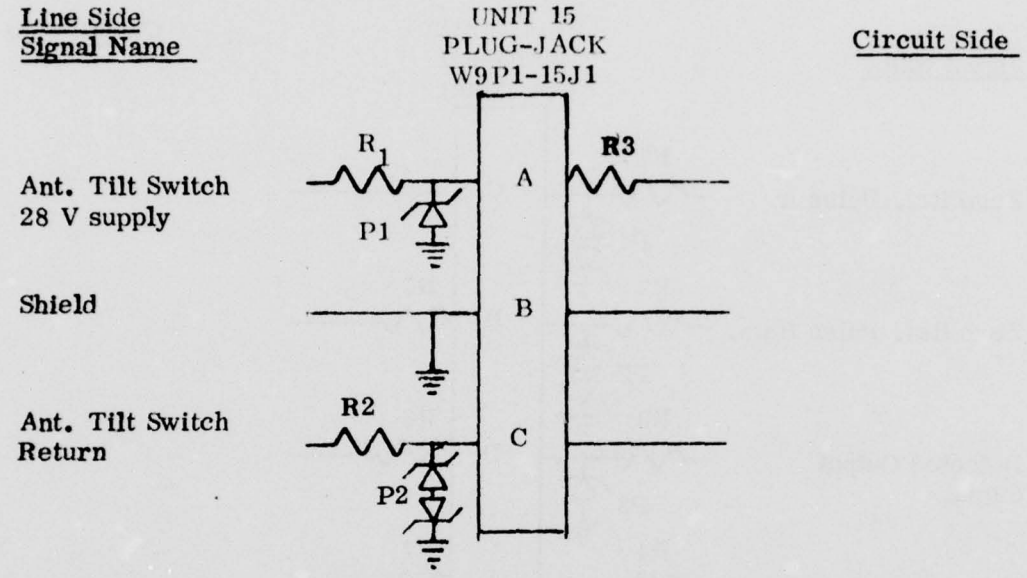

GLIDE SLOPE STATION FA 9365 ANTENNA TILT SWITCH
(See TI 6750.78)

Parts

R1, R3	56 Ω	P1	GZ41114Z
R2	10 Ω	P2	GZ41115Q

Notes:
1. Cable W9, shown in Figure 11-5 as a single lead shielded cable has been repalced with a 3 wire twisted shielded audio cable. The black lead serves as the signal return attached to terminal 3.
2. The protective devices shown here must be installed in separate terminal block and junction box added between cable W9 and the plug-jack connector W9P1-15J1 at the Antenna Tilt Switch Unit 15.

Table 9-1

PARTS LIST - Lightning Protection for Wilcox Mark I/D

Instrument Landing System

Item No.	Description	Quantities					
		Loc. Sta. Shelter	Loc. Sta. Ant. Ar.	G/S Sta. Shelter	G/S Sta. Mon. Det. Ant.	G/S Sta. Ant. Tilt Sw.	Total
1	Resistor 10Ω	9	17	2	2	1	31
2	Resistor 15Ω	6	10	3	5		24
3	Resistor 20Ω	1					1
4	Resistor 33Ω	1		1			2
5	Resistor 51Ω	1					1
6	Resistor 56Ω		2	2		2	6
7	Protector GZ41114Z	1	1	2		1	5
8	Protector GZ41115Q	8	8	1	1	1	19
9	Protector GZ41115Y		2		1		3
10	Protector GZ41116A	1					1
11	Protector GZ41116H	1		1			2
12	Protector GZ60316B	4	4	2	2		12
13	LPM 5 Terminal			2	1	1	4
14	LPM 10 Terminal	2	2				4

Notes:

1. All resistors are 2 watt carbon, 5% tolerance.
2. GZ Series protectors are leadless type as supplied by General Semiconductor Industries or equivalent.
3. LPM 5 terminal, Part #FA 9455 A; LPM 10 terminal, Part #FA 9455 B.

Section 10

Lightning Protection for Buried Cable Land Lines of the ASR-7 Airport Surveillance Radar Type FA-8200. *

All landline interconnections between transmitter and remote sites terminate in cable junction boxes (CJB) unit A-6 in the transmitter building and A-20 at the remote site. These demarcation points are the specified locations for installation of the protection devices and circuitry for Terminal Boards 1-5.

The follcwing pages detail the lines to be protected, the circuitry specified and required parts. Schematics for the units affected are contained in the report referenced below and are identified with each of the terminal blocks.

The lines terminating on terminal boards TB-1 through TB-5 are each protected by both a gas tube and a diode connected from signal to ground. This can be accommodated by using two LPM type FA9455 strips mounted side by side connected through the line side resistor. Parts list quantities reflect this method.

The diodes shown in series with the receiver gain and STC lines on page will be located adjacent to terminal boards 7TB1 through 7TB5. As space within the cabinet is marginal, not permitting installation of a second set of terminal strips, the diodes can be mounted directly to the existing line and crimping it to the opposite lead of the diode, carefully noting polarity.

* Report No. FAA-RD-75-180.

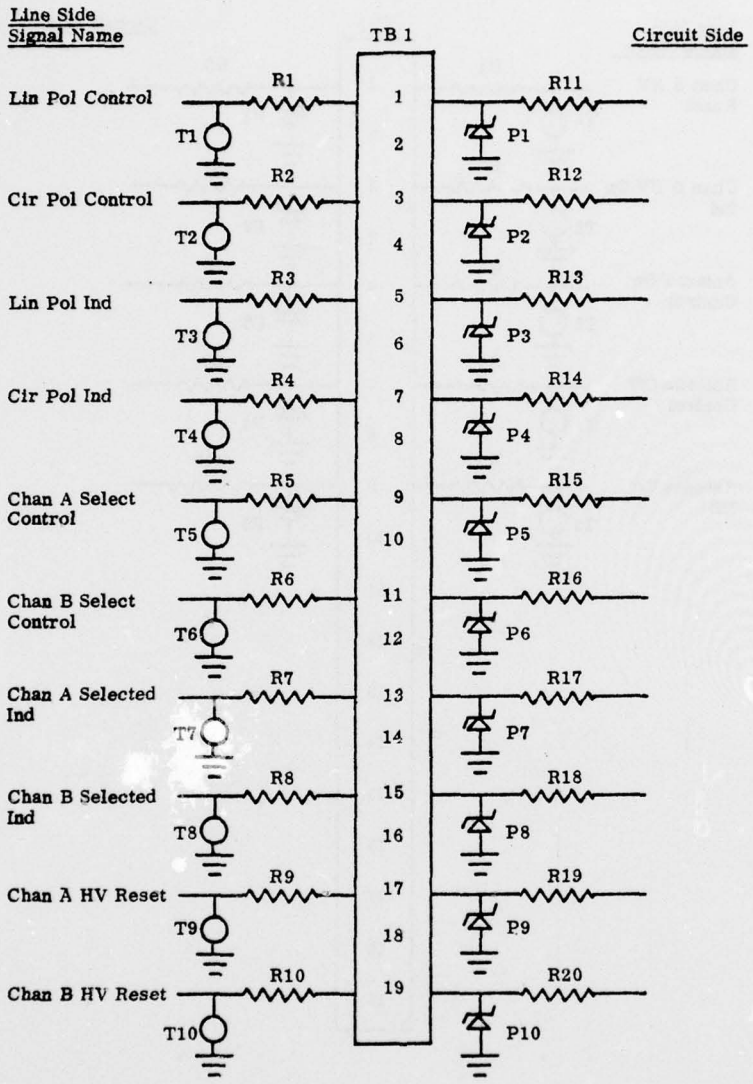

TERMINAL BLOCK 1

Terminal Blocks 1 through 5, Cable Junction Boxes A-6 (Transmitter Site) and A-20 (Remote Site). (See TI6310.4A, Figures 12-5 and 12-7 or FAA-RD-75-180, Figures A1 through A5.

Parts, Terminal Block 1:
(Multiply by 2)

R1 - R10	10Ω, 5 watt wirewound	P1 - P10 Transzorb GZ41114X
R11 - R20	10Ω, 1 watt carbon	T1 - T10 Joslyn 2021 - 10 or Siemens A1-F90

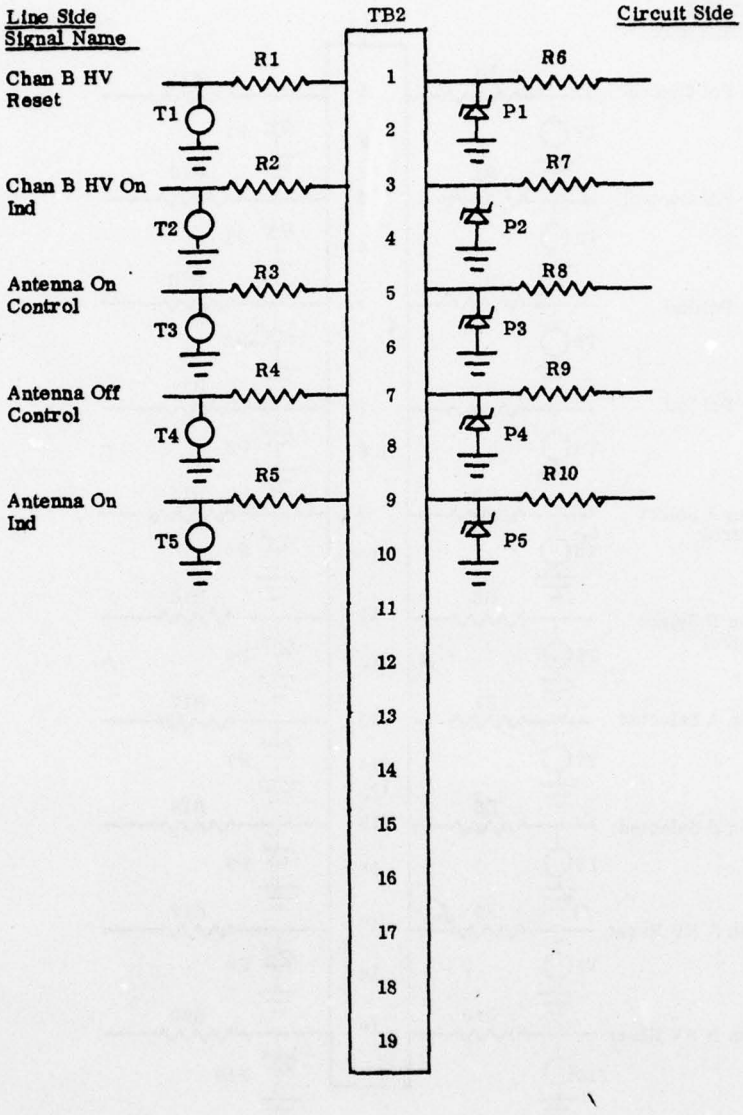

TERMINAL BLOCK 2

Parts, Terminal Block 2:
(Multiply by 2)

R1 -R5 10Ω , 5 watt wirewound
R6 -R10 10Ω , 1 watt carbon

P1 - P5 Transzorb GZ41114X
T1 - T5 Joslyn 2021-10 or
Siemens A1-F90

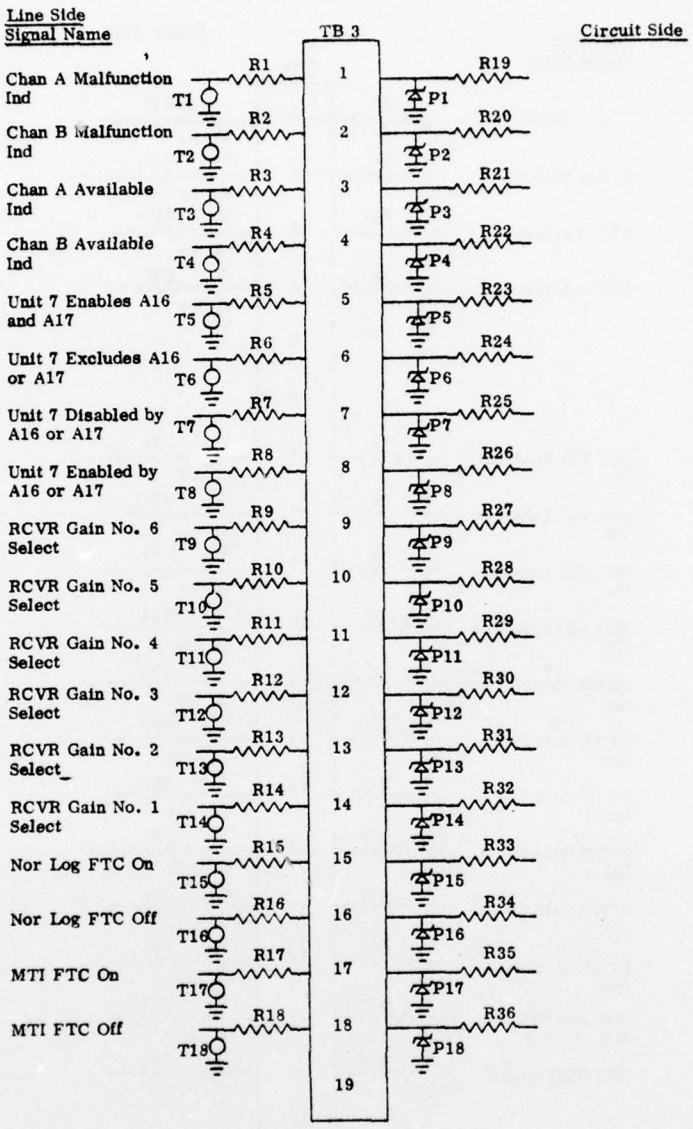

TERMINAL BLOCK 3

Parts, Terminal Block 3:
(Multiply by 2)

R1 - R18 10Ω , 5 watt wirewound
R19 - R36 10Ω , 1 watt carbon

P1 - P18 Transzorb GZ41114X
T1 - T18 Joslyn 2021-10 or Siemens A1-F90

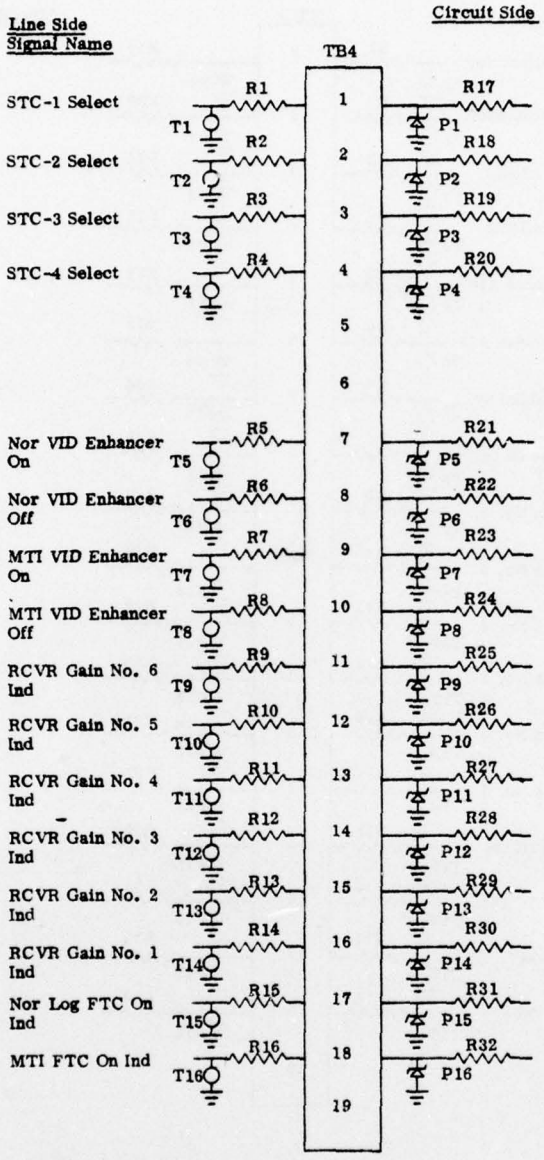

TERMINAL BLOCK 4

Parts, Terminal Block 4:
(Multiply by 2)

R1 - R16 10Ω , 5 watt wirewound
R17 - R32 10Ω , 1 watt carbon

P1 - P16 Transzorb GZ41114X
T1 - T16 Joslyn 2021-10 or Siemens A1 - F90

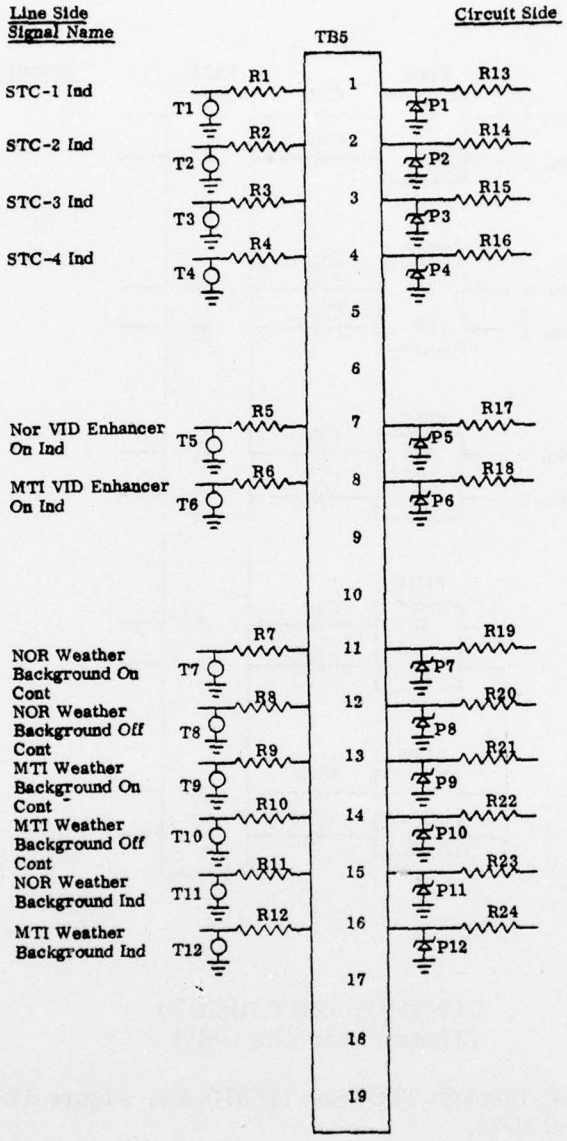

TERMINAL BLOCK 5

Parts, Terminal Block 5:
(Multiply by 2)

R1 - R12 10Ω, 5 watt wirewound
R13 - R24 10Ω, 1 watt carbon

P1 - P12 Transzorb GZ41114X
T1 - T12 Joslyn 2021-10 or Siemens A1-F90

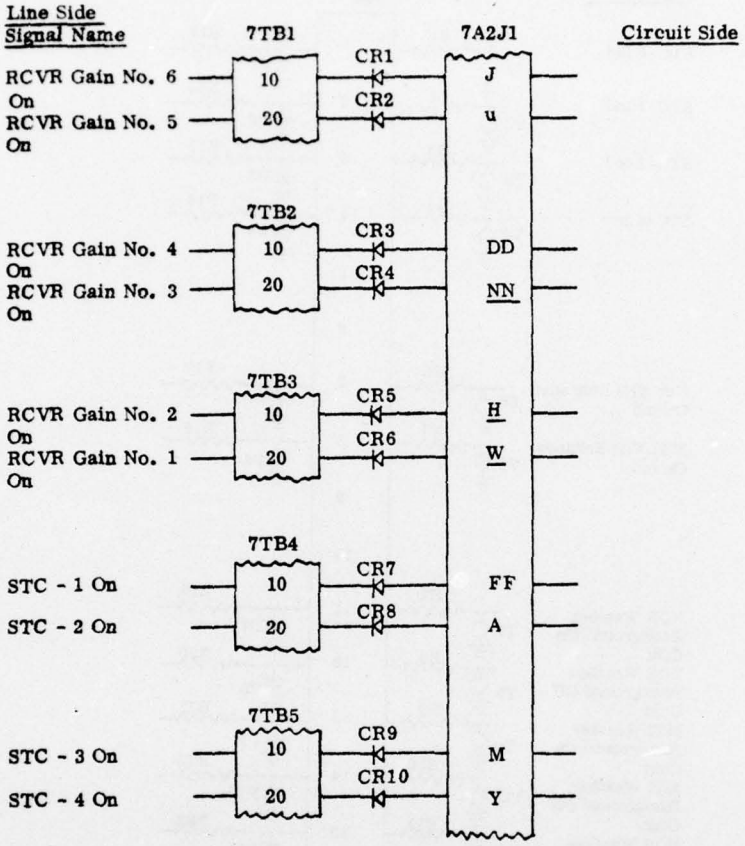

CONTROL UNIT (Unit 7)
(Transmitter Site Only)

Terminal Blocks 7TB1 through 7TB6 (See TI 6310.4A, Figure 12-17 or FAA-RD-75-180, Figures 2-10 and B-6).

Parts:

CR1 - CR10 1N647

Additional Protection Requirements

1. Protection should also be provided for the Azimuth Pulse Generator (APG) Landlines. These are 600Ω balanced lines and a special terminal block is not available to accommodate a three electrode gas type surge arrestor, P2 in the diagram. These must be wired directly to TB10.

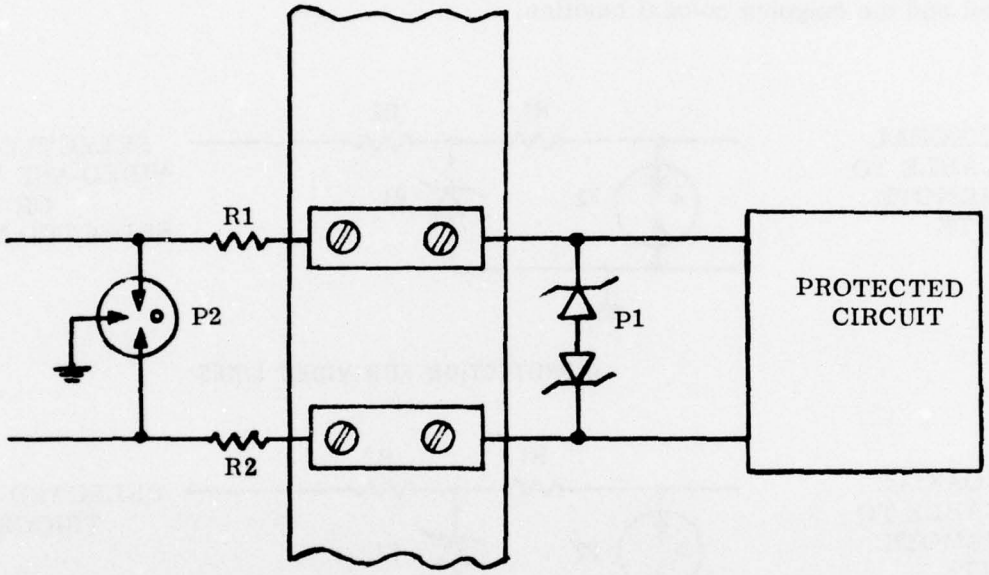

Parts, (Multiply by 2):

P2 TII316A or equivalent
P1 Transzorb GS1.5K10C

R1 and R2 5Ω, 5-watt wirewound resistors.

Protection Requirements for Azimuth Pulse Generator (APG) Landlines of ASR-7

2. Protection requirements for the video and trigger line drivers are diagramed below. The protection may be mounted on the Line Driver Video Relay Panel or in CJBA6 if coaxial feedthrough connectors are available. If the latter is chosen, the protection components may be mounted in small metal boxes with coaxial connectors on two ends. This box with the connectors may then serve as the connection for the incoming coaxial cable from the Relay Panel and the outgoing coaxial landline.

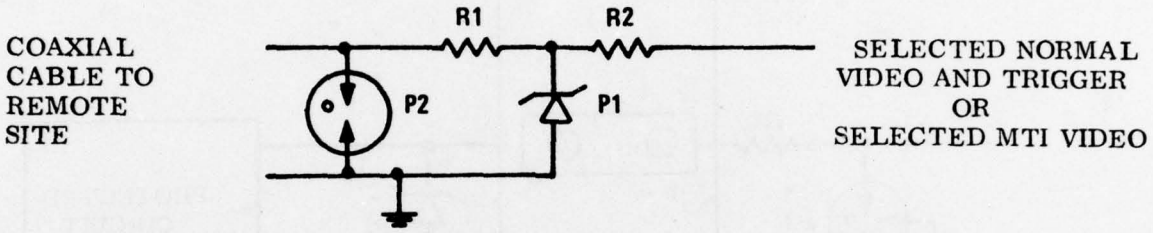

a) PROTECTION FOR VIDEO LINES.

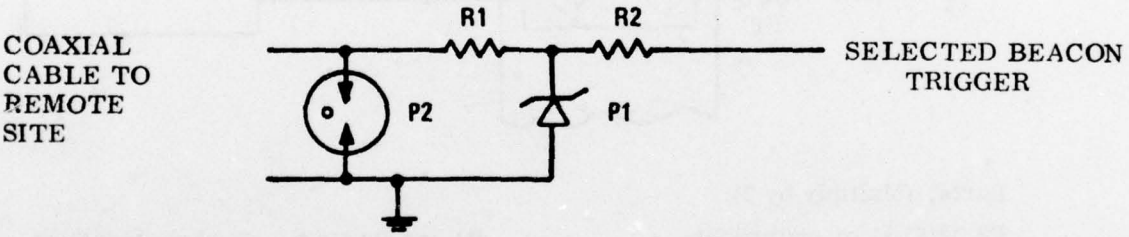

b) PROTECTION FOR BEACON TRIGGER

Parts:

P2 TII 316A (or equivalent)
R1 10-Ω, 5-watt wirewound resistor
R2 10-Ω, 1-watt carbon resistor
P1 Transzorb GS 1.5K91

Protection Requirements for Video and Trigger Line Drivers at Transmitter Site

Table 10-1

Combined Parts List Airport Surveillance Radar, ASR-7

Item No.	Description	Quantities									
		TB1	TB2	TB3	TB4	TB5	Unit 7	APG	Video Lines	Beacon Trigger	Total
1	Resister 10Ω , 5 watt wirewound	20	5	18	16	12					71
2	Resister 10Ω , 1 watt carbon	20	5	18	16	12					71
3	Resister 5Ω , 5 watt wirewound							4			4
4	Protector, leadless Transzorb GZ41114X or equivalent	20	5	18	16	12					71
5	Protector, gas filled Joslyn 2021-10 or equivalent	20	5	18	16	12					71
6	Diode, 1N647						10				10
7	Protector, gas filled TII 316A or equivalent							2	2	1	5
8	Protector, Transzorb GS1.5K 10C or equivalent							2			2
9	Protector, Transzorb GS1.5K91 or equivalent								2	1	3
10	LPM, 10 Terminal FA9455B	4		8	8	4					24
11	LPM 5 Terminal FA 9455A		4			4					8

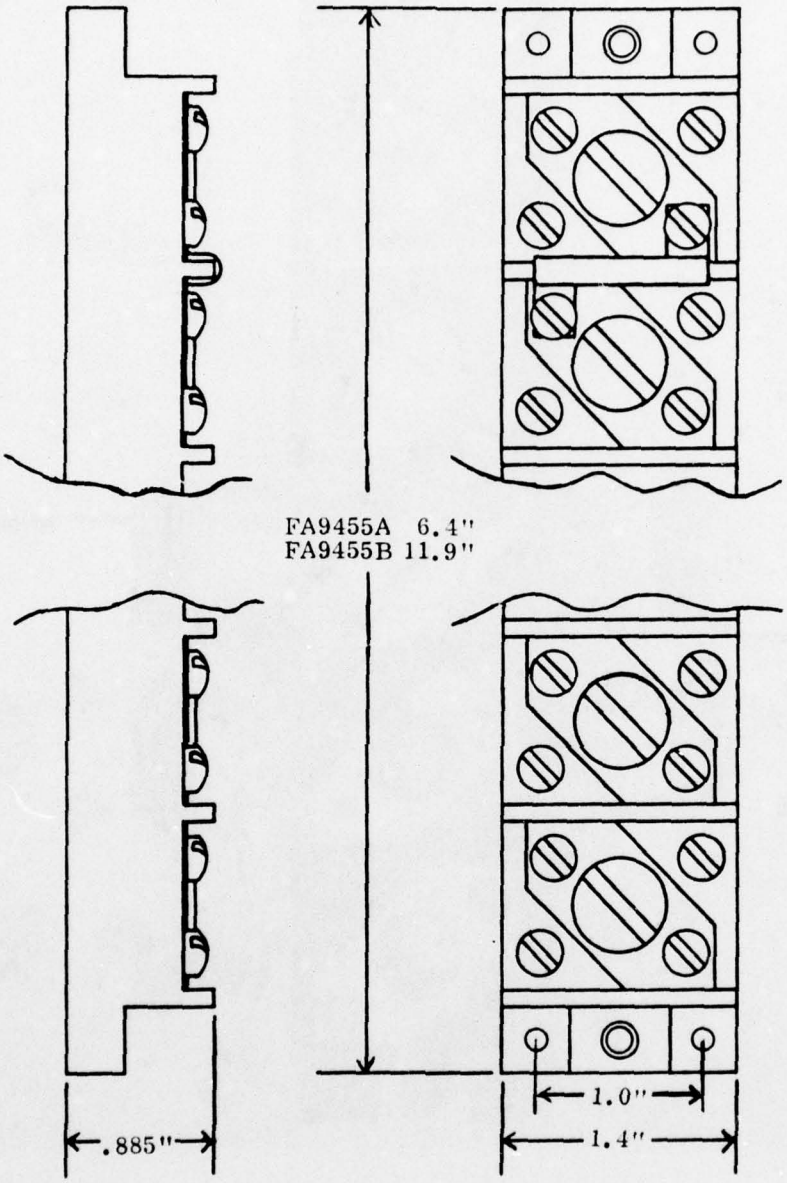

Figure A1A Lightning Protection Module, Plan View

The plan view gives critical clearance and mounting dimensions. The 5 terminal unit is designated FA 9455A. The 10 terminal is designated FA 9455B. Figure A1B is a full scale photograph of the FA 9455A showing diode insertion and resistor mounting for the most common arrangements.

Resulting circuit:

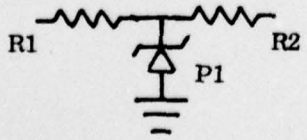

PRECEDING PAGE BLANK-NOT FILMED

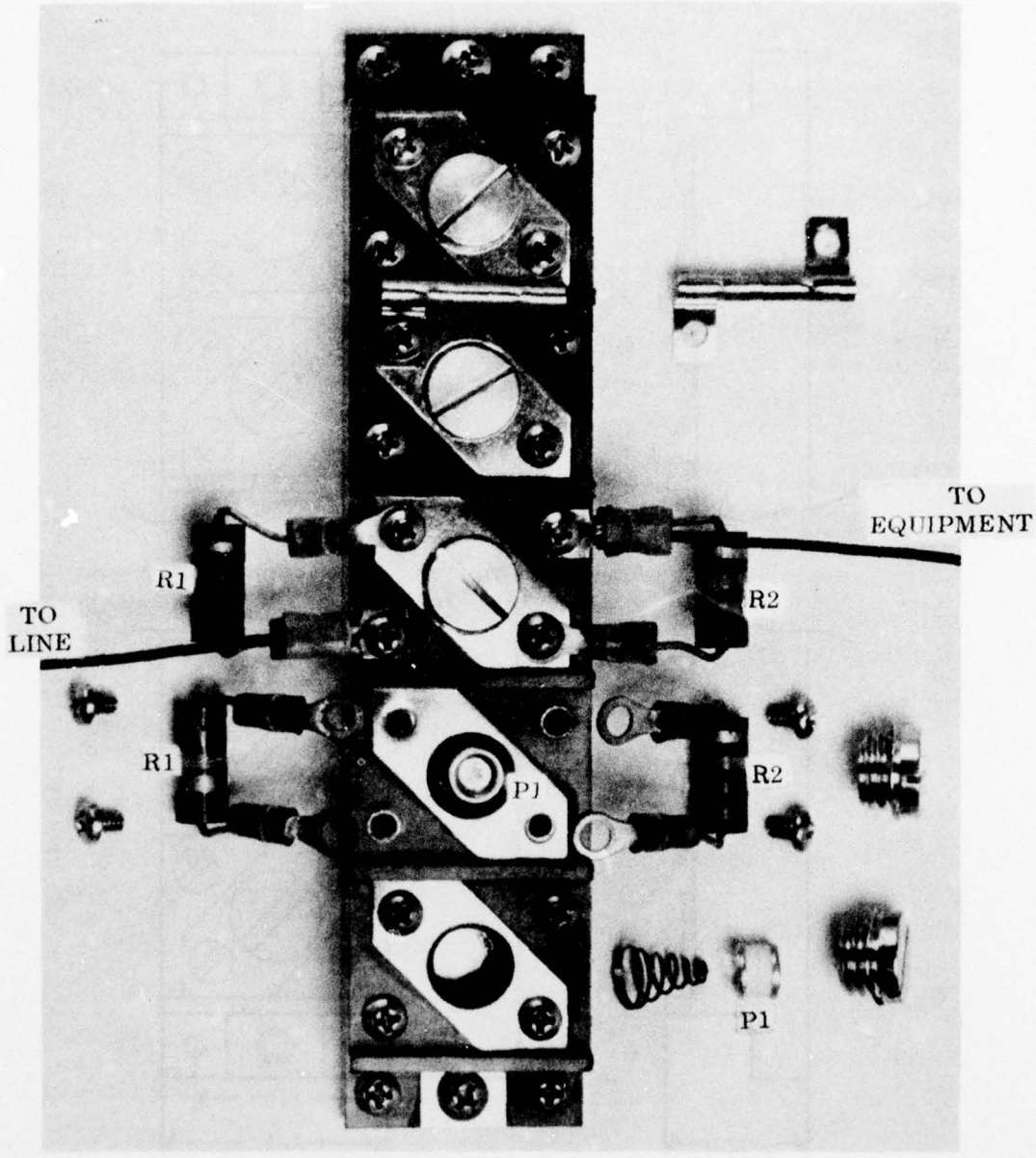

Figure A1B LPM Type FA 9455 A

Note the crossover connector connecting the top two terminals. This is used in the occasional case where more mounting points are required such as for a series diode.

APPENDIX B
LEADLESS TRANSIENT SUPPRESORS - ELECTRICAL CHARACTERISTICS

Pages B1 through 3 tabulate the electrical characteristics and FAA part numbers for the transient suppressors specified in this handbook. The JEDEC equivalents are not mechanically interchangeable and are included for reference purposes. Also included is a listing of commercial equivalent units also manufactured by General Semiconductor Industries, Inc. Use of the data sheet is with permission of the copyright owner.

LEADLESS TRANSIENT SUPPRESSORS
ELECTRICAL CHARACTERISTICS 25°C

FAA Part No.*	Breakdown Voltage BV @ I T Volts mA		Reverse Stand-Off Voltage V R Volts	Maximum Clamping Voltage @ I PP V C Volts	Maximum Reverse Leakage @I R I R A	Maximum Peak Pulse Current I PP A	Maximum Temp. Coef. of BV %/°C	Jedec Type No.**
GZ41114B	6.12 - 7.48	10	5.50	10.8	1000	139	.057	1N5629
GZ41116D	Same as GZ41114B	except	Bipolar***					
GZ41114C	6.75 - 8.25	10	6.05	11.7	500	128	.061	1N5630
GZ41115R	Same as GZ41114C	except	Bipolar***					
GZ41114D	7.38 - 9.02	10	6.63	12.5	200	120	.065	1N5631
GZ41115S	Same as GZ41114D	except	Bipolar***					
GZ41114E	8.19 - 10.0	1	7.37	13.8	50	109	.068	1N5632
GZ41115T	Same as GZ41114E	except	Bipolar***					
GZ41114F	9.00 - 11.0	1	8.10	15.0	10	100	.073	1N5633
GZ41115U	Same as GZ41114F	except	Bipolar***					
GZ41114G	9.9 - 12.1	1	8.92	16.2	5	93	.075	1N5634
GZ41115V	Same as GZ41114G	except	Bipolar***					
GZ41114H	10.8 - 13.2	1	9.72	17.3	5	87	.078	1N5635
GZ41115W	Same as GZ41114H	except	Bipolar***					
GZ41114J	11.7 - 14.3	1	10.5	19.0	5	79	.081	1N5636
GZ41115X	Same as GZ41114J	except	Bipolar***					
GZ41114K	13.5 - 16.5	1	12.1	22.0	5	68	.084	1N5637
GZ41115Y	Same as GZ41114K	except	Bipolar***					
GZ41114L	14.4 - 17.6	1	12.9	23.5	5	64	.086	1N5638
GZ41115Z	Same as GZ41114L	except	Bipolar***					
GZ41114M	16.2 - 19.8	1	14.5	26.5	5	56.5	.088	1N5639
GZ41116A	Same as GZ41114M	except	Bipolar***					
GZ41114N	18.0 - 22.0	1	16.2	29.1	5	51.5	.090	1N5640
GZ41116B	Same as GZ41114N	except	Bipolar***					
GZ41114P	19.8 - 24.2	1	17.8	31.9	5	47	.092	1N5641
GZ41116C	Same as GZ41114P	except	Bipolar***					

ELECTRICAL CHARACTERISTICS 25°C

FAA Part No.*	Breakdown Voltage BV Volts	@ I T mA	Reverse Stand-Off Voltage V R Volts	Maximum Clamping Voltage @ I PP V C Volts	Maximum Reverse Leakage @ I R I R A2	Maximum Peak Pulse Current I PP A	Maximum Temp. Coef. of BV %/°C	Jedec Type No.**
GZ41114Q	21.6 - 26.4	1	19.4	34.7	5	43	.094	1N5642
GZ41116D	Same as GZ41114Q	except	Bipolar***					
GZ41114R	24.3 - 29.7	1	21.8	39.1	5	38.5	.096	1N5643
GZ41116E	Same as GZ41114R	except	Bipolar***					
GZ41114S	27.0 - 33.0	1	24.3	43.5	5	34.5	.097	1N5644
GZ41116F	Same as GZ41114S	except	Bipolar***					
GZ41114T	29.7 - 36.3	1	26.8	47.7	5	31.5	.098	1N5645
GZ41116G	Same as GZ41114T	except	Bipolar***					
GZ41114U	32.4 - 39.6	1	29.1	52.0	5	29	.099	1N5646
GZ41116H	Same as GZ41114U	except	Bipolar***					
GZ41114V	35.1 - 42.9	1	31.6	56.4	5	26.5	.100	1N5647
GZ41116J	Same as GZ41114V	except	Bipolar***					
GZ41114W	38.7 - 47.3	1	34.8	61.9	5	24	.101	1N5648
GZ41116K	Same as GZ41114W	except	Bipolar***					
GZ41114X	42.3 - 51.7	1	38.1	67.8	5	22.2	.101	1N5649
GZ41116L	Same as GZ41114X	except	Bipolar***					
GZ41114Y	45.9 - 56.1	1	41.3	73.5	5	20.4	.102	1N5650
GZ41116M	Same as GZ41114Y	except	Bipolar***					
GZ41114Z	50.4 - 61.6	1	45.4	80.5	5	18.6	.103	1N5651
GZ41116N	Same as GZ41114Z	except	Bipolar***					
GZ41115A	55.8 - 68.2	1	50.2	89.0	5	16.9	.104	1N5652
GZ41116P	Same as GZ41115A	except	Bipolar***					
GZ41115B	61.2 - 74.8	1	55.1	98.0	5	15.3	.104	1N5653
GZ41116Q	Same as GZ41115B	except	Bipolar***					

AD-A047 730 ROME AIR DEVELOPMENT CENTER GRIFFISS AFB N Y F/G 9/5
FAA LIGHTNING PROTECTION STUDY: HANDBOOK OF INSTALLATION PROCED--ETC(U)
OCT 77 R M COSEL
UNCLASSIFIED DOT-FA72WAI-356
FAA-RD-77-170 NL

2 OF 2
AD
A047730



END
DATE
FILMED
1 -78
DDC

ELECTRICAL CHARACTERISTICS 25°C

FAA Part No.*	Breakdown Voltage BV Volts	@ I T mA	Reverse Stand-Off Voltage V R Volts	Maximum Clamping Voltage @ I PP V C Volts	Maximum Reverse Leakage @ I R I R A	Maximum Peak Pulse Current I PP A	Maximum Temp. Coef. of BV %/°C	Jedec Type No.**
GZ41115C	67.5 - 82.5	1	60.7	108.0	5	13.9	.105	1N5654
GZ41116R	Same as GZ41115C	except	Bipolar***					
GZ41115D	73.8 - 90.2	1	66.4	118.0	5	12.7	.105	1N5655
GZ41116S	Same as GZ41115D	except	Bipolar***					
GZ41115E	81.9 - 100.0	1	73.7	131.0	5	11.4	.106	1N5656
GZ41116T	Same as GZ41115E	except	Bipolar***					
GZ41115F	90.0 - 110.0	1	81.0	144.0	5	10.4	.106	1N5657
GZ41116U	Same as GZ41115F	except	Bipolar***					
GZ41115G	99.0 - 121.0	1	89.2	158.0	5	9.5	.107	1N5658
GZ41116V	Same as GZ41115G	except	Bipolar***					
GZ41115H	108.0 - 132.0	1	97.2	173.0	5	8.7	.107	1N5659
GZ41116W	Same as GZ41115H	except	Bipolar***					
GZ41115J	117.0 - 143.0	1	105.0	187.0	5	8.0	.107	1N5660
GZ41116X	Same as GZ41115J	except	Bipolar***					
GZ41115K	135.0 - 165.0	1	121.0	215.0	5	7.0	.108	1N5661
GZ41116Y	Same as GZ41115K	except	Bipolar***					
GZ41115L	144.0 - 176.0	1	130.0	230.0	5	6.5	.108	1N5662
GZ41116Z	Same as GZ41115L	except	Bipolar***					
GZ41115M	153.0 - 187.0	1	138.0	244.0	5	6.2	.108	1N5663
GZ41117A	Same as GZ41115M	except	Bipolar***					
GZ41115N	162.0 - 198.0	1	146.0	258.0	5	5.8	.108	1N5664
GZ41117B	Same as GZ41115N	except	Bipolar***					
GZ41115P	180.0 - 220.0	1	162.0	287.0	5	5.2	.108	1N5665
GZ41117C	Same as GZ41115P	except	Bipolar***					

* Fig. 1 for outline drawing.
** Part is similar electrically but mechanically.
*** Electrical characteristics apply in both directions.

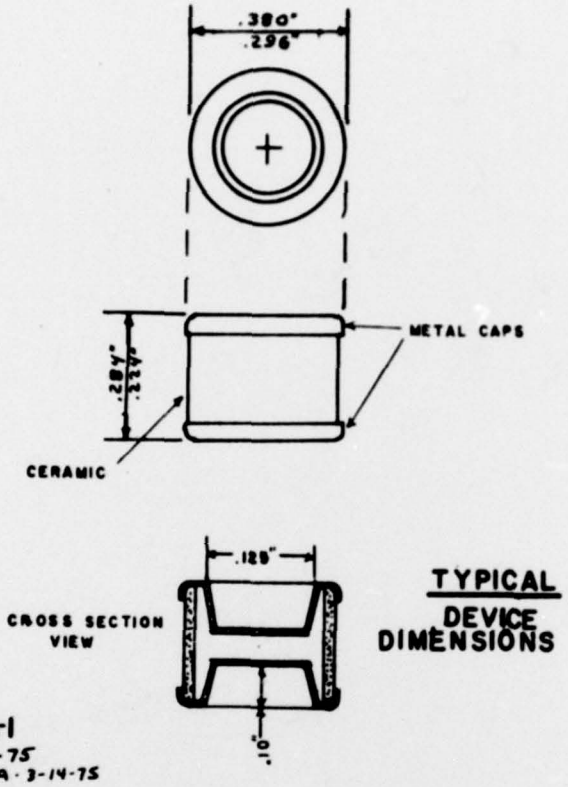

TYPICAL DEVICE DIMENSIONS

FIG-1
2-12-75
Rev A · 3-14-75

GENERAL SEMICONDUCTOR INDUSTRIES, INC.

TRANSZORB
TRANSIENT VOLTAGE SUPPRESSORS
1 5KC6 8
THRU
1 5KC110A

DESCRIPTION

This leadless TransZorb is designed for direct retro-fit or replacement of a gas-discharge suppressor when lower voltages are needed to protect voltage sensitive circuitry. For Bipolar applications, see notes on the reverse side.

The TransZorb has a peak pulse power rating of 1500 watts for 1 millisecond and therefore can be used in applications where induced lightning on rural or remote transmission lines present a hazard to the electronic circuitry. (Reference: R.E.A. Specification P.E. 60). The response time of TransZorb clamping action is effectively instantaneous (better than 1×10^{-12} sec.); therefore, they can protect Integrated Circuits, MOS devices, Hybrids and other voltage-sensitive semiconductors and components. TransZorbs can also be used in series or parallel to increase the peak power ratings.

TransZorbs have proven to be effective in Airborne Avionics and Controls, Mobil Communication Equipment, Computer Power Supplies, Numerically Controlled Machinery, and in many other applications where inductive and switching transients are present.

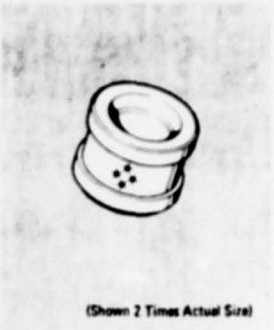

(Shown 2 Times Actual Size)

- **1500 watts peak power dissipation**
- **Available in ranges from 6.8V to 110V.**

MAXIMUM RATINGS

- 1500 Watts of Peak Pulse Power dissipation at 25°C
- $t_{clamping}$ (0 volts to BV min): Less than 1×10^{-12} seconds
- Operating and Storage Temperatures: −65° to +175°C
- Forward surge rating: 200 amps, 1/120 second at 25° C
- Steady State power dissipation: 1.0 W
- Repetition rate (duty cycle): .01%

MECHANICAL CHARACTERISTICS

- Ceramic Case with Metal Caps
- Weight: 1.25 grams (approximate)
- Polarity marked with polarity symbol
- Body marked with Logo and type number

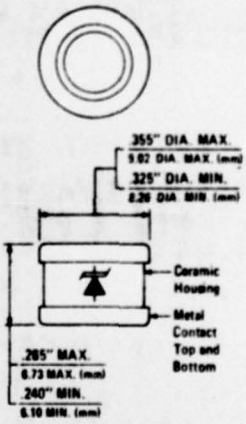

(Shown 2 Times Actual Size)

ELECTRICAL CHARACTERISTICS

- Clamping Ratio: 1.33 @ Full rated power
  1.15 @ 50% rated power

Clamping Ratio: The ratio of the actual Vc (Clamping Voltage) to the actual BV (Breakdown Voltage) as measured on a specific device. (See figure 3 for test pulse wave shape.)

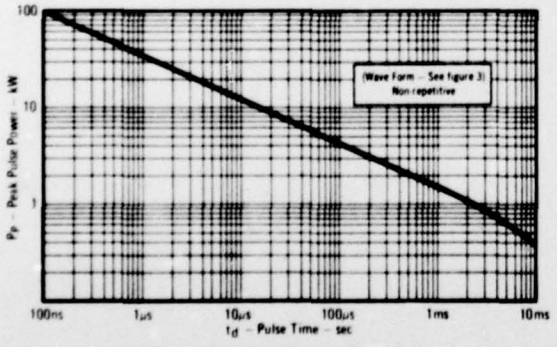

FIGURE 1 – Peak Pulse Power vs Pulse Time

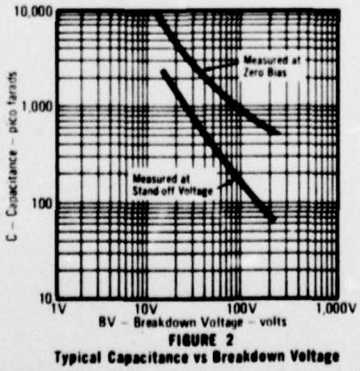

FIGURE 2
Typical Capacitance vs Breakdown Voltage

ABBREVIATIONS & SYMBOLS

V_R Stand Off Voltage. Applied Reverse Voltage to assure a nonconductive condition. (See Note 1)

BV(min) This is the minimum Breakdown Voltage the device will exhibit and is used to assure that conduction does not occur prior to this voltage level at 25°C.

V_C (max) Maximum Clamping Voltage. The maximum peak voltage appearing across the TransZorb when subjected to the peak pulse current in a one millisecond time interval. The peak pulse voltages are the combination of voltage rise due to both the series resistance and thermal rise.

I_{PP} Peak Pulse Current – See Figure 3

P_P Peak Pulse Power

I_R Reverse Leakage

Note 1:
A TransZorb is normally selected according to the reverse "Stand Off Voltage" (V_R) which should be equal to or greater than the DC or continuous peak operating voltage level.

ELECTRICAL CHARACTERISTICS at 25°C

GENERAL SEMICONDUCTOR PART NUMBER	REVERSE STAND OFF VOLTAGE (See Note 1) V_R VOLTS	BREAKDOWN VOLTAGE @ I_T mA — BV VOLTS Min	BREAKDOWN VOLTAGE @ I_T mA — BV VOLTS Max	I_T mA	MAXIMUM CLAMPING VOLTAGE @ I_{PP} (See Fig. 3) V_C VOLTS	MAXIMUM REVERSE LEAKAGE @ V_R I_R µA	MAXIMUM PEAK PULSE CURRENT (See Fig. 3) I_{PP} A	MAXIMUM TEMPERATURE COEFFICIENT OF BV %/°C
1.5KC6.8	5.50	6.12	7.48	10	10.8	1000	139	.057
1.5KC6.8A	5.80	6.45	7.14	10	10.5	1000	143	.057
1.5KC7.5	6.05	6.75	8.25	10	11.7	500	128	.061
1.5KC7.5A	6.40	7.13	7.88	10	11.3	500	132	.061
1.5KC8.2	6.63	7.38	9.02	10	12.5	200	120	.065
1.5KC8.2A	7.02	7.79	8.61	10	12.1	200	124	.065
1.5KC9.1	7.37	8.19	10.0	1	13.8	50	109	.068
1.5KC9.1A	7.78	8.65	9.55	1	13.4	50	112	.068
1.5KC10	8.10	9.00	11.0	1	15.0	10	100	.073
1.5KC10A	8.55	9.5	10.5	1	14.5	10	103	.073
1.5KC11	8.92	9.9	12.1	1	16.2	5	93	.075
1.5KC11A	9.40	10.5	11.6	1	15.6	5	96	.075
1.5KC12	9.72	10.8	13.2	1	17.3	5	87	.078
1.5KC12A	10.2	11.4	12.6	1	16.7	5	90	.078
1.5KC13	10.5	11.7	14.3	1	19.0	5	79	.081
1.5KC13A	11.1	12.4	13.7	1	18.2	5	82	.081
1.5KC15	12.1	13.5	16.5	1	22.0	5	68	.084
1.5KC15A	12.8	14.3	15.8	1	21.2	5	71	.084
1.5KC16	12.9	14.4	17.6	1	23.5	5	64	.086
1.5KC16A	13.6	15.2	16.8	1	22.5	5	67	.086
1.5KC18	14.5	16.2	19.8	1	26.5	5	56.5	.088
1.5KC18A	15.3	17.1	18.9	1	25.2	5	59.5	.088
1.5KC20	16.2	18.0	22.0	1	29.1	5	51.5	.090
1.5KC20A	17.1	19.0	21.0	1	27.7	5	54	.090
1.5KC22	17.8	19.8	24.2	1	31.9	5	47	.092
1.5KC22A	18.8	20.9	23.1	1	30.6	5	49	.092
1.5KC24	19.4	21.6	26.4	1	34.7	5	43	.094
1.5KC24A	20.5	22.8	25.2	1	33.2	5	45	.094
1.5KC27	21.8	24.3	29.7	1	39.1	5	38.5	.096
1.5KC27A	23.1	25.7	28.4	1	37.5	5	40	.096
1.5KC30	24.3	27.0	33.0	1	43.5	5	34.5	.097
1.5KC30A	25.6	28.5	31.5	1	41.4	5	36	.097
1.5KC33	26.8	29.7	36.3	1	47.7	5	31.5	.098
1.5KC33A	28.2	31.4	34.7	1	45.7	5	33	.098
1.5KC36	29.1	32.4	39.6	1	52.0	5	29	.099
1.5KC36A	30.8	34.2	37.8	1	49.9	5	30	.099
1.5KC39	31.6	35.1	42.9	1	56.4	5	26.5	.100
1.5KC39A	33.3	37.1	41.0	1	53.9	5	28	.100
1.5KC43	34.8	38.7	47.3	1	61.9	5	24	.101
1.5KC43A	36.8	40.9	45.2	1	59.3	5	25.3	.101
1.5KC47	38.1	42.3	51.7	1	67.8	5	22.2	.101
1.5KC47A	40.2	44.7	49.4	1	64.8	5	23.2	.101
1.5KC51	41.3	45.9	56.1	1	73.5	5	20.4	.102
1.5KC51A	43.6	48.5	53.6	1	70.1	5	21.4	.102
1.5KC56	45.4	50.4	61.6	1	80.5	5	18.6	.103
1.5KC56A	47.8	53.2	58.8	1	77.0	5	19.5	.103
1.5KC62	50.2	55.8	68.2	1	89.0	5	16.9	.104
1.5KC62A	53.0	58.9	65.1	1	85.0	5	17.7	.104
1.5KC68	55.1	61.2	74.8	1	98.0	5	15.3	.104
1.5KC68A	58.1	64.6	71.4	1	92.0	5	16.3	.104
1.5KC75	60.7	67.5	82.5	1	108.0	5	13.9	.105
1.5KC75A	64.1	71.3	78.8	1	103.0	5	14.6	.105
1.5KC82	66.4	73.8	90.2	1	118.0	5	12.7	.105
1.5KC82A	70.1	77.9	86.1	1	113.0	5	13.3	.105
1.5KC91	73.7	81.9	100.0	1	131.0	5	11.4	.106
1.5KC91A	77.8	86.5	95.5	1	125.0	5	12.0	.106
1.5KC100	81.0	90.0	110.0	1	144.0	5	10.4	.106
1.5KC100A	85.5	95.0	105.0	1	137.0	5	11.0	.106
1.5KC110	89.2	99.0	121.0	1	158.0	5	9.5	.107
1.5KC110A	94.0	105.0	116.0	1	152.0	5	9.9	.107

V_f at 100 AMPS PEAK, 8.3 MSEC SINE WAVE equals 3.5 VOLTS MAXIMUM

TransZorbs™ can be used in series or parallel to increase their power handling capability. N... required when using TransZorbs in a series string and power dissipation for two or mo... same type is equally shared. When using TransZorbs in parallel it is necessary for the u... matched (approx. .1 volt of each other) in order for equal sharing to take place. Matche... ordered from the factory for a small additional charge.

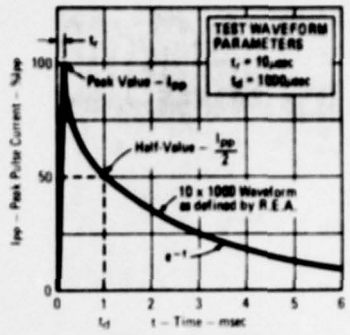

FIGURE 3 — Pulse Wave Form

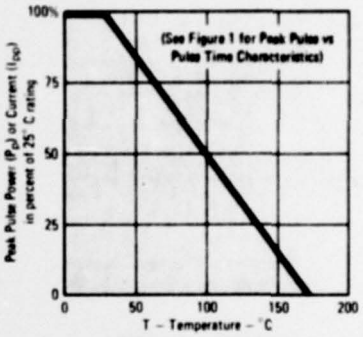

FIGURE 4 — Derating Curve

Non-standard voltage types between those tabulated may be specified as illustrated:

Family Type | Nominal BV | Tolerance Suffix

1.5KC 7.2 A

BV Will be Nominal BV ±5% for "A" suffix types and ±10% for non-suffix types at the test current of the next lower standard voltage type.

V_R Will be 85% of Nominal BV for "A" suffix type and 81% of Nominal BV for non-suffix types.

V_C Will be proportionally interpolated between the two neighboring standard types.

I_R Will be that of the next lower standard type.

I_{PP} Will be proportionately interpolated between the two neighboring standard types.

BIPOLAR APPLICATIONS

For Bipolar use C or CA Suffix for types 1.5KC7.5 through types 1.5KC110. Electrical characteristics apply in both directions.

APPENDIX C
REFERENCES

1. Cosel, R.M., Revay, A.W., Jr., and Stahmann, J., "FAA Lightning Protection Study". Lightning Simulation Test of Communication Cables," Report No. FAA-RD-74-71, January 1974.

2. Chen, C.L., "FAA Lightning Protection Study: Lightning Protection Devices," Report No. FAA-RD-74-104, April 1974.

3. Nordgard, J.D., and Chen, C.L., "FAA Lightning Protection Study: Lightning Induced Transients on Buried Shielded Transmission Lines," Report No. FAA-RD-75-108, June 1975.

4. Cosel, R.M., Hu, R.H., Revay, A.W., Jr., "FAA Lightning Protection Study: Lightning Protection Requirements for Wilcox Mark 1/A Instrument Landing System", Report No. FAA-RD-75-49, January 1975.

5. Cosel, R.M., Hu, R.H., Revay, A.W., Jr., "FAA Lightning Protection Study: Lightning Protection Requirements for Wilcox Mark 1/C Instrument Landing System", Report No. FAA-RD-75-50, March 1975.

6. Cosel, R.M., Hu, R.H., Revay, A.W., Jr., "FAA Lightning Protection Study: Lightning Protection Requirements for AIL Type 55K Instrument Landing System", Report No. FAA-RD-75-47, January 1975.

7. Cosel, R.M., Hu, R.H., Revay, A.W., Jr., "FAA Lightning Protection Study: Lightning Protection Requirements for AIL Mark 1 Instrument Landing System", Report No. FAA-RD-75-48, January 1975.

8. Huddleston, G.K., "FAA Lightning Protection Study: Lightning Protection Requirements for Status and Control Lines of AN/GRN-27(V) Instrument Landing System", Report No. FAA-RD-75-24, February 1975.

9. Huddleston, G.K., Busch, G.G., "FAA Lightning Protection Study: Lightning Protection Requirements for Mark III Instrument Landing System (Category III)" Report No. FAA-RD-75-73, February 1975.

10. Cosel, R.M., Drake, M.D., Revay, A.W., Jr., "FAA Lightning Protection Study: Lightning Protection Requirements for Runway Visual Range Systems". Report No. FAA-RD-75-181, December 1975.

11. Chen, C.L., Peele, W., Wilkinson, D.R., "FAA Lightning Protection Study: Lightning Protection Requirements for the ARTS III System", Report No. FAA-RD-75-70, April 1975.

12. Huddleston, G.K., Bush, G.G., "FAA Lightning Protection Study: Lightning Protection Requirements for Airport Surveillance Radar Model ASR-7", Report No. FAA-RD-75-180, July 1975.