INSTRUCTION MANUAL



HAND MIXER

Model: HM 3732

Dear Customer,

Congratulations!

You are now the proud owner of USHA Hand Mixer

Innovatively designed, using only the highest quality material and components, your USHA Hand Mixer is designed for years of trouble free performance.

Please read this Instruction Manual carefully before using and keep it cautiously after reading for future reference.

Best Wishes

IMPORTANT PRECAUTIONS

When using electrical appliances, basic safety precautions should always be followed, including the following:

1. Read all instructions before using.
2. To protect against risk of electrical shock, do not put Hand Mixer, other than beaters, in water or other liquid. This may cause personal injury and/or damage the product.
3. Do not leave the mixer unattended while it is in operation. Close supervision is necessary when Hand Mixer is used near or by children or persons with reduced physical capacity.
4. Make sure that you outlet voltage corresponds to the voltage stated on the rating label of the mixer.
5. Unplug from outlet when not in use, before putting on or taking off parts and before cleaning.
6. Avoid contact with moving parts. Keep hands, hair, clothing, as well as spatulas and other utensils away from beaters during operation of the Hand Mixer to reduce the risk of injury to persons and/or damage to the hand mixer.
7. Do not operate any appliance with a damaged cord or plug, or after the appliance malfunctions or has been dropped or damaged in any manner. Please get the appliance repaired at the nearest company authorized service centre, or calf our toll free no. 1800-1033-111.
8. Do not let the power cord hang over edge of table or counter top.
9. Do not place the Hand Mixer on or near a hot burner or inside a heated over / Microwave. Do not let power cord or motor housing touch hot surfaces, including a stove.
10. Remove beaters from Hand Mixer before washing.
11. Always check that the control is in OFF or '0' position before plugging cord into wall outlet. To disconnect, turn the control to OFF or '0', then remove plug from wall outlet. Switch off the appliance before changing accessories or approaching which move in use
12. The use of attachments not recommended / not sold by the company may cause fire, electric shock or injury.
13. Do not use the appliance outdoors or for commercial purposes. Do not use mixer for other than intended use.

Safety Warning:

This appliance is for HOUSEHOLD USE ONLY. No user – serviceable parts inside. Power unit never needs lubrication. Do not attempt to service the product.

KNOW YOUR HAND MIXER

Features:

Your hand mixer is designed to mix cookie dough and cake batters, mash potatoes, whip heavy cream and egg whites.

300 W Power full motor to take care of your all mixing and kneading requirement.

This 5 Speed Hand mixer has been designed to assist you in preparing delicious foods.

Integrated Beater Eject button - This hand mixer features an integrated beater eject button. The design allows for a smooth use of the thumb to release the beater hooks.

Turbo:

The Turbo feature allows for an added boost to the selected speed setting at the press of a button. During heavy mixing tasks, press the Turbo button to drive through the mixture with ease. Once the button is released, the mixer will return to the original speed setting.

The handle has been designed for comfort to prevent fatigue of the hand during heavy or long mixing tasks.

Ergonomic design makes mixing convenient at any angle.

Air Vents Positioned to avoid clogging from batters and other mixtures

Storage box for storing all the components with ease

PRODUCT DESCRIPTION

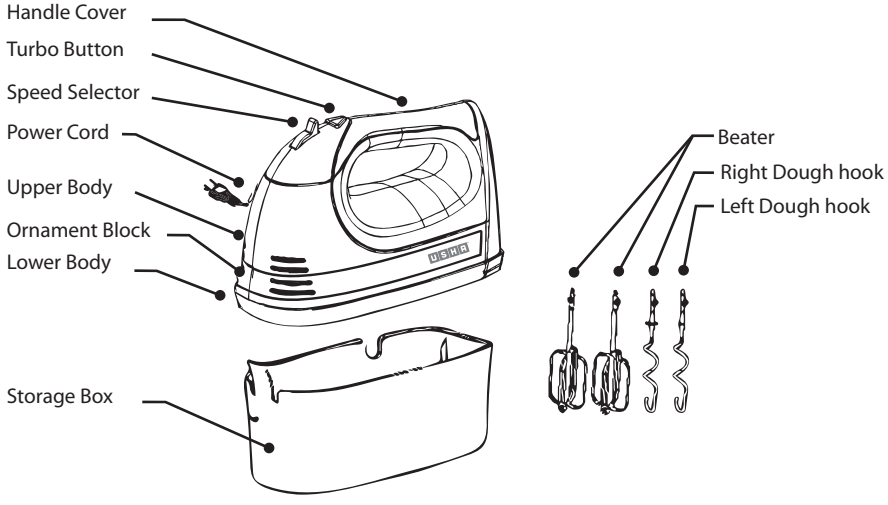

BEATERS:

These are ideal for mixing batter, whisking sauces or whipping light fluffy ingredients.

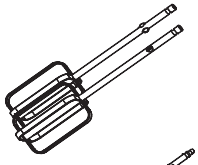

DOUGH HOOKS:

Spiral dough hooks are designed to mix or knead heavier batters or bread dough. Hooks may also be used for gently mixing pastry dough

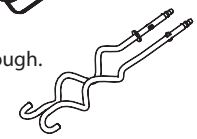

USING THE APPLIANCE

Be sure to read and follow the specific instructions in this manual for proper use of this hand mixer.

BEFORE USING FOR THE FIRST TIME

1. Carefully unpack Hand Mixer.
2. Wash Beaters and Dough Hooks in warm, soapy water. Rinse well and dry thoroughly.
3. Wipe Mixer with a soft, clean cloth or sponge.

   Note: Never immerse Motor Housing in water or any other liquid.

HOW TO ATTACH THE ACCESSORIES

Before attaching Wire Beaters and Dough Hooks - Be sure the Mixer is unplugged and the speed selector is in the OFF position.

1. One Beater / Dough hook may have a small metal washer ring (collar) around the top of the Stem. The Beaters/Dough Hooks with the Washer-Ring is the one you insert into the bigger of the two holes in. Push the Beaters/Dough Hooks /Wire 0 Beaters with the Washer-Ring into the bigger hole. Rotate the Beater until it locks into position. (See Figure 1.)
2. Push other Beaters/Dough Hooks/ Wire Beaters (without Washer-Ring) into other Mixer hole. Rotate the Beater until it locks into position. (See Figure 2.)
3. After installing the Beaters/Dough Hooks, gently pull on each Stem to be sure they are secured properly.

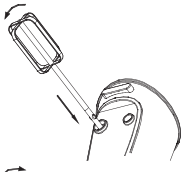

Figure 1

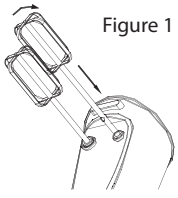

Figure 2

Caution : Always unplug Mixer from Outlet before installing or removing attachments.

Use either both the beaters or both dough hooks . Do not attempt to use a dough hook with a beater. This could damage the Mixer.

HOW TO USE YOUR HAND MIXER

1. Before using your hand mixer for the first time, remove the accessories from the storage box, then clean the beaters. Before assembling the mixer, be sure the power cord is unplugged from the power outlet and the speed selector is on the OFF position.

2. Assemble proper attachments into mixer.
3. Ensure that the unit is at the OFF/ '0' setting, plug in the power source.
4. Turn the speed selector to your desired setting, there are 5 setting. The appliance will start working and the speed will increase if the turbo button is pressed at any time.

   Warning: Do not stick knife, metal spoons, fork and so on into bowl when operating.

   Note: The max operation time per time is 5 minutes. Minimum 20 minutes rest time must be maintained between two consecutive cycles.
6. When mixing is completed, turn the speed selector to OFF / '0' position, unplug the cord from power outlet.
7. If necessary you can scrape the excess food particles from the beaters by rubber or wooden spatula.

Note:

- Dough hook can only be used for kneading dough.
- Beater can be used for mixing egg white and blending foodstuff, it can not be used for kneading dough

HOW TO REMOVE THE ACCESSORIES

1. Slide the speed control level to '0' position.
2. Unplug the appliance.
3. Hold the beaters/dough hooks with one hand and press the Eject button firmly down with the other hand, remove the beaters/whisk.

Note:

When ejecting the accessories, never face the accessories to a person, it may result in injury.

Caution:

The eject button can be pressed down only when the speed selector is on the OFF/'0' setting. Make sure the power cord is unplugged from the power outlet before removing the accessories.

HOW TO OPERATE THE SPEED CONTROL

The 5-Speed hand mixer should always be set on the lowest speed to start mixing. Move to higher speeds as needed.

Speed Setting	Application	Mixing task
Speed 1	Fold	For slow stirring, combining, and starting all mixing procedures
Speed 2	Stir	For combining liquids with dry ingredients
Speed 3	Mix	For mixing batters and dough recipes
Speed 4	Blend	For combining light mixtures for fillings/puddings
Speed 5	Beat / Whip	For cake mixes and other light mixtures. For whipping cream and aerating eggs.

CARE AND CLEANING

CLEANING THE HAND MIXER

1. Always Unplug the appliance and wait for it to completely cool down before cleaning.
2. Wipe the outside surface of the hand mixer with a warm dampened cloth; then wipe clean with a soft dry cloth.
3. Wipe any excess food particles from the power cord.
4. Wash the beaters, dough hooks and whisk in warm soapy water and wipe dry. The accessories may be washed in the dishwasher.

   Caution: Do not immerse the mixer in water or other liquid. Avoid use of abrasive cleaners that will mar the finish of your mixer.

COOKERY TIPS

1. Refrigerated ingredients, such as butter and eggs should be at room temperature before the mixing begins. Set these ingredients out ahead of time.
2. To eliminate the possibility of shells or deteriorated-off eggs in your recipe, break eggs into separate container first, then add into the mixture.
3. Do not over-beat. Be careful that you only mix/blend mixtures until recommended in your recipe. Fold into dry ingredients only until just combined. Always use the low speed.
4. Climatic conditions, seasonal temperature changes, temperature of ingredients and their texture variation from area to area all play a part in the required mixing time and the results achieved.
5. Always start mixing at lower speed. Gradually increase to the recommended speed as stated in the recipe.

STORAGE INSTRUCTIONS

When not in use, put the beaters/dough hooks into the storage box. Then store the mixer on the storage box by placing it on the storage box directly and press down with force, the mixer will clip with the box.

TROUBLESHOOTING

If your hand mixer malfunctions or fails to operate, check if the hand mixer is plugged in properly. Try unplugging the hand mixer and then plug it back.

Other than the recommended cleaning, no further user maintenance should be necessary. If for any reason your hand mixer should require repairs, do not try to fix it yourself. Please contact your nearest company service centre or call our toll free no. 1800 – 1033 - 111

PRODUCT SPECIFICATIONS

Model	HM 3732
Rated Voltage	220-240V
Rated Frequency	50 Hz
Power Consumption	300 W
Rated Usage	5 Min.
Power Cord	2 Pin
Product Weight	1.15 kg

Note: In view of Usha policy of continual development, specifications may change without notice.

NOTES

NOTES

USHA

WARRANTY CARD

This appliance is warranted for 2 years against all manufacturing defects from the date of sale. In the event of any complaint contact the nearest company service Centre or call our toll free number 1800 1033 111.

THIS WARRANTY IS VALID ONLY WHEN

1. The appliance has not been opened or tampered with, by any unauthorized person.
2. The warranty card or cash memo duly signed by the authorized dealer is presented with the complaint.
3. The appliance has been installed, used and maintained in accordance with the instruction manual.

THIS WARRANTY DOES NOT APPLY FOR

1. Damages due to chipping, peeling, plating and denting.
2. Breakage or damage to components made out of Bakelite, urea, abs, san, and such plastic, materials, rubber parts and cord.
3. Normal wear and tear of the parts of the appliance.
4. Damage resulting from accidents, mishandling or negligence on part of the customer.

Liability for consequential loss or damage is neither accepted nor implied

S.NO: _____

CASH MEMO: _____ DATE: _____

_____

DEALER'S NAME AND ADDRESS: _____

_____

OWNER'S NAME & ADDRESS: _____

_____

USHA care™

Toll free

1800-1033-111

usha_care@ushainternational.com

USHA INTERNATIONAL LTD.

Plot No.15, Institutional Area, Sector 32, Gurgaon - 122 001 (Haryana) Tel : +91-124-4583100, Fax : +91-124-4583200
E-mail : corporate@ushainternational.com Website : www.usha.com
Regd. Office : Surya Kiran Building, 19 Kasturba Gandhi Marg, New Delhi(India) Tel : +91 11 23318114 Fax : +91 11 23318118

SHRIRAM®

ISO 9001:2015 Certified Company

Fans • Sewing Machines • Home Appliances • Engines & Pumpsets• Electrical Motors & Pumps • Water Coolers & Dispensers • Inverters • Cook Tops, Hobs & Hoods • Auto Components

USHA ® Registered Trademark and Copyright of USHA INTERNATIONAL LTD. SHRIRAM® Registered Trademark of USHA INTERNATIONAL LTD.