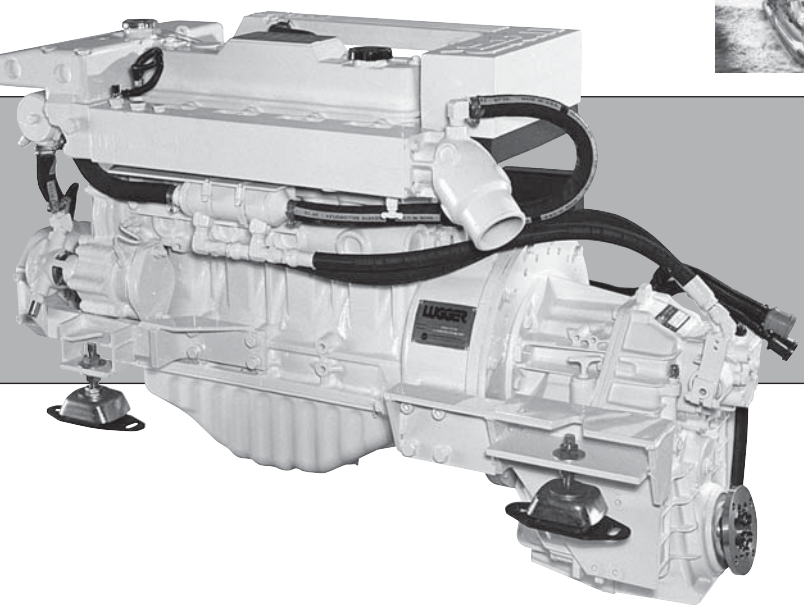






0L984

For Model: L984

OPERATOR'S MANUAL

Marine Generators | Marine Diesel Engines | Land-Based Generators

NORTHERN LIGHTS®

LUGGER






— CALIFORNIA —
Proposition 65 Warning:

Diesel engine exhaust and some of its constituents are known to the State of California to cause cancer, birth defects, and other reproductive harm.

Northern Lights
4420 14th Avenue N.W.
Seattle, WA 98107
Tel: (206) 789-3880
Fax: (206) 782-5455

Copyright ©1997 Northern Lights, Inc.
All rights reserved. Northern Lights™, and the Northern Lights logo are trademarks of Northern Lights, Inc.

Printed in U.S.A.
PART NO.: OL984 03/10

NORTHERN LIGHTS®

OPERATOR'S MANUAL
for Model L984

Read this operator's manual thoroughly before starting to operate your equipment.
This manual contains information you will need to run and service your new unit.

Table of Contents

INTRODUCTION **2**
- Models Included **2**
- Model Numbers **2**
- Serial Numbers **2**

WARRANTY **3**

SAFETY RULES **3**

INSTRUMENT PANELS **4**

COMPONENT LOCATIONS **5**

OPERATING PROCEDURES
- Break-in Period **6**
- Before Starting **6**
- Starting **6**
- Operating **6**
- Stopping **7**
- Shutdowns and Alarms **7**
- Spare Parts **7**

SERVICING SCHEDULE CHART ..... **8 - 9**

SERVICING
- Lubrication - General **10**
- Checking Oil **10**
- Oil Changes **10**
- Changing Oil Filter **10**
- Air Filter **10**
- V-Belts **10**

SERVICING (CONTINUED)
- Valve Clearances **11**
- Fuels - General ..... **11 - 12**
- Fuel Filters **12**
- Bleeding the Fuel System **12**
- Injector Service **13**
- Injection Pump ..... **13 - 15**
- Cooling System - General **15**
- Cooling System Flushing **15**
- Heat Exchanger **15**
- Raw Water Pump **15**
- Zinc Electrodes **15**
- PTO **16**
- Electrical System - General **16**
- Booster Batteries **16**
- Battery Care **16**
- Winterizing / Out-of-Service **17**

TROUBLESHOOTING
- Electrical **18**
- Engine ..... **18 - 19**

DATA SHEETS
- Specifications **20**
- Dimensions **21**

WIRING DIAGRAMS
- DC Electrical ..... **22 - 23**

CALIFORNIA
Proposition 65 Warning:

Diesel engine exhaust and some of its constituents are known to the State of California to cause cancer, birth defects, and other reproductive harm.

Proprietary Information

This publication is the property of Northern Lights, Inc.

It may not be reproduced in whole or in part without the written permission of Northern Lights, Inc.

© Northern Lights, Inc. All rights reserved. Litho U.S.A. Publication number OL984 03/10

Introduction

Servicing of marine engines and generator sets presents unique problems. In many cases boats cannot be moved to a repair facility. Marine engines cannot be compared to the servicing of automobiles, trucks or even farm equipment. Failures often occur in remote areas far from competent assistance. Marine engines are taxed far more severely than auto or truck engines; therefore, maintenance schedules must be adhered to more strictly.

Failures begin with minor problems that are overlooked and become amplified when not corrected during routine maintenance.

As operator, it is your obligation to learn about your equipment and its proper maintenance. This is not a comprehensive technical service manual. Nor will it make the reader into an expert mechanic. Its aim is to aid you in maintaining your unit properly.

Unit Identification

MODELS INCLUDED

This manual covers the operating instructions for:

L984 which uses the 984 engine block.

Model Numbers

Model numbers give the unit's application, block model, aspiration, and RPM:

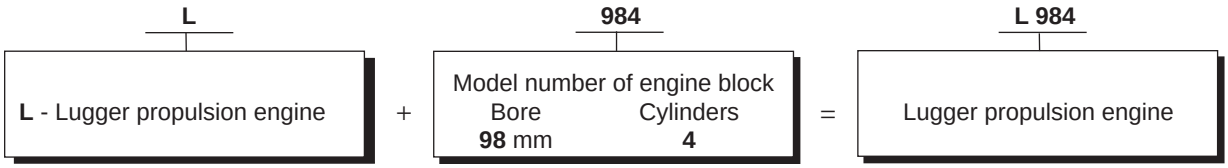

Serial Numbers

When referencing Northern Lights, Inc. equipment by serial number, please refer only to the number stamped on the Northern Lights® or Lugger® serial number plate.

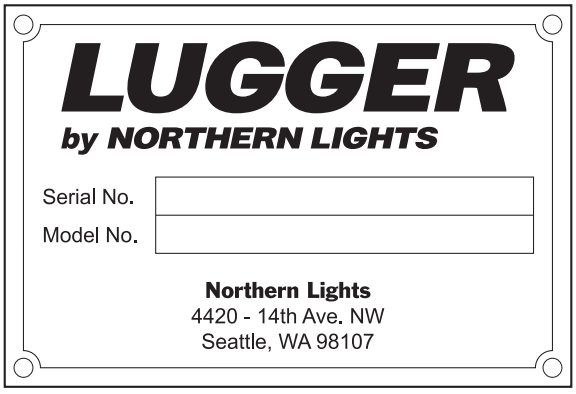

Warranty

A warranty registration certificate is supplied with your set. It entitles the original purchaser of our equipment to a warranty covering material or assembly faults. The extent of coverage is described in the Limited Warranty Statement. We recommend that you study the statement carefully.

NOTE: If the warranty is to apply, the servicing instructions outlined in this manual must be followed. If further information is needed, please contact an authorized dealer or the factory.

Safety Rules

CAUTION: Accident reports show that careless use of engines causes a high percentage of accidents. You can avoid accidents by observing these safety rules. Study these rules carefully and enforce them on the job.

- Never leave engine without proper security.
- Turn the coolant tank cap slowly to relieve pressure before removing. Add coolant only when the engine is stopped and cool.
- Mount a fire extinguisher near engine.
- Always disconnect the battery ground strap before making adjustments.
- Operate engines in properly ventilated areas.
- Keep trash and other objects away from engine.
- Escaping fluids under pressure can penetrate your skin. Use a piece of cardboard or wood, not your hands, to search for leaks.
- Avoid wearing loose clothing without a belt when working around engines.
- Do not oil or grease engine while it is running.
- Use caution in handling fuel. Never refuel a hot or running engine. Do not smoke while filling fuel tank or servicing fuel system.
- Keep your hands, feet, hair and clothing away from power-driven parts.
- Check for any loose electrical connections or faulty wiring.
- Engines should be operated only by knowledgeable, qualified personnel.
- Look completely around engine to make sure that everything is clear before starting.
- Do not operate an engine that isn't in proper working order. If an unsafe operating condition is noted, tag the set and control panel so others will also know about the problem.
- Provide first aid kits.

CAUTION: This symbol is used throughout this book to alert you to possible danger areas. Please take special notice of these sections.

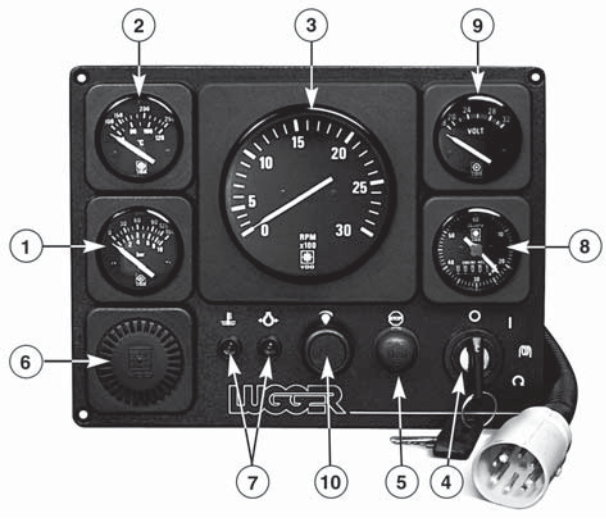

Figure 2. *Lugger Instrument Panel*

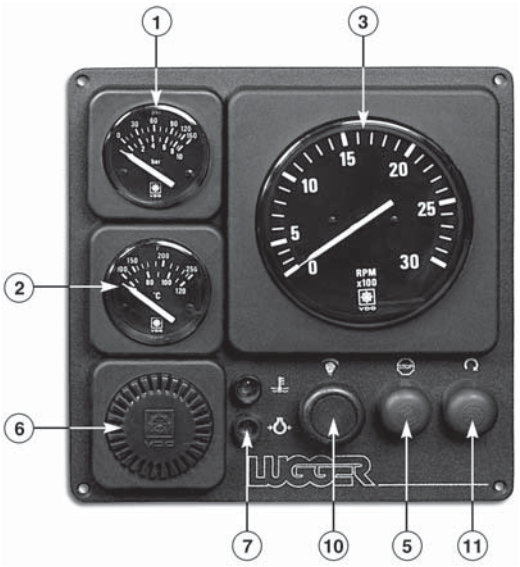

Figure 3. *Lugger Flybridge Panel*

1. OIL PRESSURE GAUGE

The oil pressure gauge shows the oil pressure in the engine lubricating system.

2. ENGINE TEMPERATURE GAUGE

Registers temperature of cooling water.

3. TACHOMETER

The tachometer shows the engine speed in revolutions per minute (RPM). Numbers are multiples of 100.

4. KEY SWITCH

The key must be kept in the ON position while the engine is running.

5. STOP BUTTON

Hold down to stop engine.

6. ALARM HORN

Will sound in case of overheating or low oil pressure. Stop engine and investigate. Remember the horn will sound when the key is in “ON” position when the engine is stopped because there is no oil pressure.

7. WARNING LIGHTS

Indicates low oil pressure and high water temperature.

8. ENGINE HOUR METER

Keeps track of engine running time.

9. D.C. VOLTMETER

When the engine is stopped, the voltmeter indicates the condition of the battery. When the engine is running, the voltmeter indicates the voltage output of the alternator.

10. INSTRUMENT LIGHT SWITCH

Pull switch to turn on; push to turn off.

11. START BUTTON

Hold down to start engine.

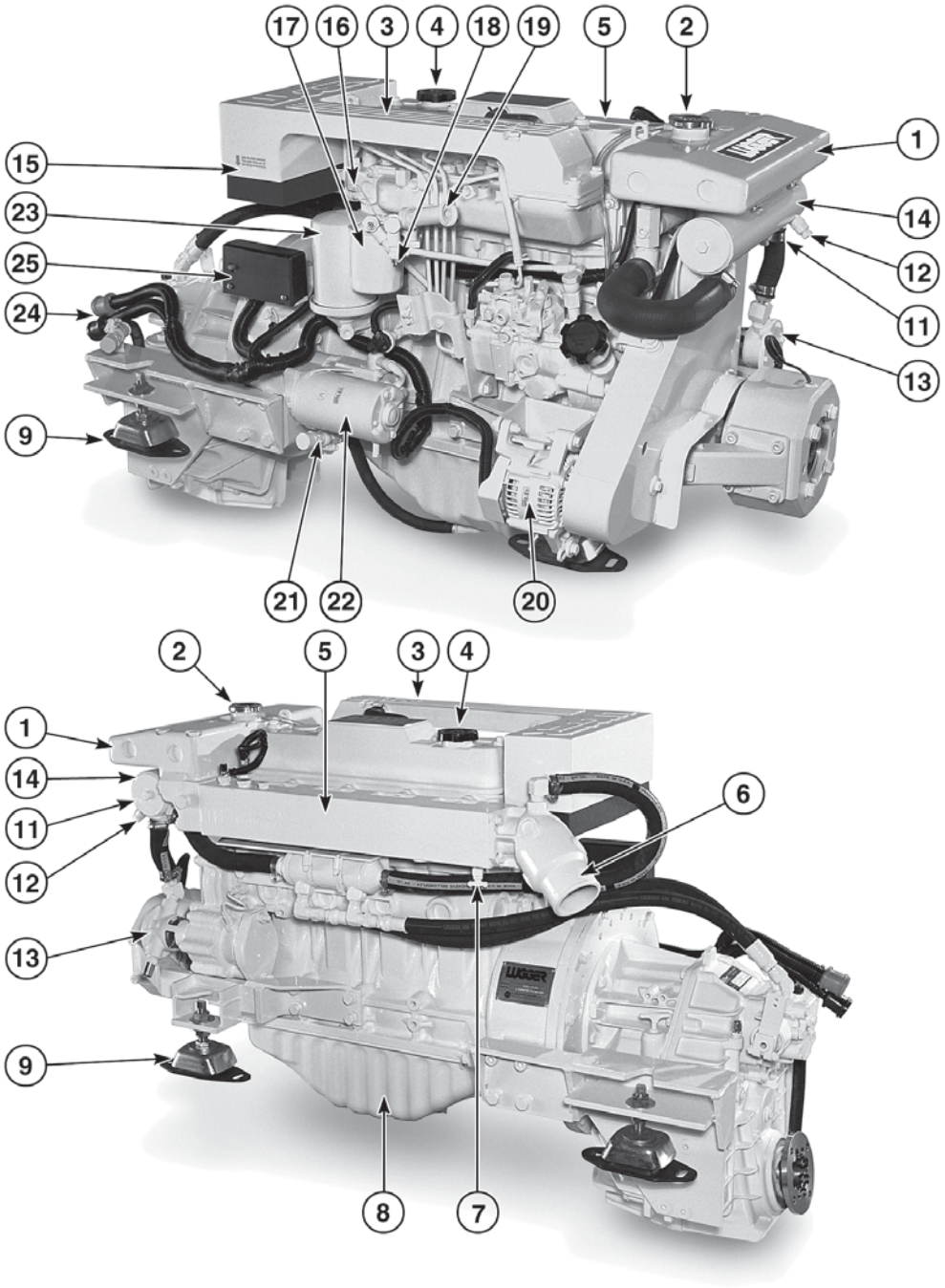

Figure 4A and 4B: *L984.*

1. Expansion Tank
2. Coolant Fill
3. Intake Manifold
4. Lube Oil Fill
5. Exhaust Manifold
6. Wet Exhaust Elbow
7. Manifold Drain
8. Oil Pan
9. Vibration Mount
10. Hydraulic Pump (optional - not shown)
11. Heat Exchanger
    Fresh Water Drain
12. Heat Exchanger
    Raw Water Drain and Zinc
13. Raw Water Pump
14. Heat Exchanger
15. Air Filter
16. Lube Oil Dipstick
17. Secondary Fuel Filter
18. Fuel System Bleed Point
19. Fuel Primer Pump
20. DC Alternator
21. Lube Oil Drain
22. Starter
23. Lube Oil Filter
24. DC Panel Plug In
25. DC Circuit Breaker

BREAK-IN PERIOD

1. The first 100 hours on a new or reconditioned engine are critical to its life and performance.
2. Constantly check the engine temperature and oil pressure gauges (sets with Series 3 or 4 panels).
3. Oil consumption is greater during break-in as piston rings take time to seat.
4. Break-In Oil Changes: Change engine oil and filter at 50 hours. Change oil and filter again at 100 hours (consult Lubricants section for oil recommendation).
5. Check the oil level in the reverse gear. Methods may vary from gear to gear. See your Gear Owner's Manual.

Operating Instructions:

Never run full speed for more than 5 minutes during the first 50 hours. Run your engine at 50 to 75% of maximum working speed for the first 20 hours with as little idling time as possible. **Extended idling can inhibit ring seating, causing cylinder walls to glaze.**

BEFORE STARTING

1. Check the water level by removing the pressure cap from the expansion tank. In order to give the cooling water an opportunity to expand, the level should be about 1 in. (2.5 cm) below the filler cap sealing surface when the engine is cold.

CAUTION: Use protective clothing and open the filler cap carefully when the engine is warm to prevent burns.

2. Check the oil level in the crankcase with the dipstick. The oil level must be in the waffled area on the stick. Never allow the level to go below this area. Always add the same viscosity of oil as is already in the crankcase.
3. Check the fuel tank level and open any fuel valves.
4. Close the sea-cock, check and clean the sea strainer and reopen the sea-cock.
5. Place the battery switch in the ON position. ***NOTE: The battery switch must always be kept ON while the engine is running. If the switch is turned OFF while the engine is running, the battery charging regulator could be ruined.***

STARTING

1. Put the gear control in the neutral position.
2. Move the throttle control to the full speed position and return back to idle.
3. Turn the key switch to the first position. Check the voltage meter to see the condition of the batteries. For starting, the voltmeter should not read below 12 volts (24 volts for 24 volt systems).
4. Turn the key to the starting position and as soon as the engine starts, release the key. Move the throttle up until the engine is running at approximately 1000 RPM.
5. Do not crank the starter for more than 20 seconds consecutively. If the engine fails to start with the first attempt, be sure that it has stopped completely before re-engaging.
6. ***NOTE: Never race a cold engine. Operate at 1000 RPM for a 3-5 minute warmup period.***

OPERATING

1. Check oil pressure as soon as the engine has started. Oil pressure should be between 20-60 PSI. The engine must never run if the oil pressure is below 15 PSI.
2. Check the voltmeter. It should read 13.5 to 15.5 volts (28-29 volts, 24 volt systems) at 80°F (25°C) at 1500 RPM.
3. Water temperature should not rise over 205°F (97°C). If it does, shut down the engine and investigate the cause of overheating.
4. Do not exceed 800 RPM when shifting the marine gear. Repeated shifts at higher engine speeds can damage the reverse gear.
5. Normal engine speed working range is 800 to 2400 RPM. Low idle is 770 RPM. Maximum working engine speed is: 2600 RPM for pleasure craft, 2400 RPM for light commercial craft, 2000 RPM for continuous duty applications. The injection pump governor controls maximum engine speed in neutral (also called high-idle) at 2650 RPM.
6. If the proper propeller is used, the engine should reach its appropriate maximum speed at full throttle. If at full throttle the maximum speed is exceeded, then the propeller is too small. If maximum speed cannot be attained, then the propeller is too large or bottom growth may be slowing the boat (see Prop Chart, page 20).

STOPPING

1. Run for 3-5 minute cool down period in neutral at 1000 RPM, then return throttle to low idle.
2. Push STOP button to stop engine and turn key switch to OFF position.
3. Close the seacock, fuel valves, and put the battery switch in OFF position.

ALARMS

1. Your unit is fitted with a warning horn to protect it from high water temperature or low oil pressure. Remember: When the engine is not running the horn will sound when the key is in the ON position because there is no oil pressure.
   NOTE: Do not rely on your warning to the exclusion of careful gauge monitoring. Watching your gauges can prevent damage to the unit and dangerous power losses.
2. Do the following when your warning system is activated:
   a. Check the temperature gauge. If above 205°F (97°C), shut off the engine immediately.
   b. Use the Trouble Shooting Guide on page 19 to isolate the cause of the overheat.

CAUTION: Do not remove the water fill cap of an overheated engine. Escaping high temperature steam can cause severe burns. Allow the engine to cool and then remove the cap slowly using protective clothing.

   d. Make repairs and restart after the temperature gauge registers below 200°F (94°C).
   e. Watch the temperature gauge regularly and turn off the unit if the temperature rises above 205°F (97°C). Repeat troubleshooting.
3. If the horn sounds and the temperature gauge shows temperature within normal temperature range:
   a. Check the engine crankcase oil level.
   b. If the oil level is low, fill with recommended lubricating oil and restart. Watch the oil pressure gauge carefully and shut off the engine if it does not show a normal reading (20-60 PSI) after a few seconds of operation.
   c. If the oil level is normal, DO NOT restart the engine. Call your dealer for assistance.

SPARE PARTS

1. ADE recommends that you keep the following spare parts on hand for field service. The parts are available from your local Lugger dealer. Some marine models already have “On-Board-Kits,” a handy box that contains the most common parts you will need.
2. All owners should have the following:
   a. Primary and secondary fuel filter elements
   b. Oil filters
   c. Alternator belt
   d. Thermostat and gaskets
   e. Seawater pump impeller & gaskets
   f. Glow plug
   g. Injector and washer

Servicing Schedule Chart

The Servicing Schedule Chart below shows the service schedule required for proper maintenance of your propulsion engine. More detailed coverage of each Service Point (SP) is listed on the page noted in the 'page' column.

DAILY:
- SP1 Check oil level in engine
- SP7 Check primary fuel filter
- SP13 Check cooling water level
- Check sea strainer
- SP20 Check oil level in reverse gear (propulsion)

AFTER FIRST 50 HOURS:
- SP2/3 Change engine oil and filter
- SP5 Check V-belt tension
- SP6 Adjust valves
- SP18 Check electrolyte in batteries

EVERY 50 HOURS:
- SP5 Check V-belt tension
- SP18 Check electrolyte in batteries

EVERY 200 HOURS:
- SP2/3 Change engine oil and filter
- SP4 Check air cleaner
- SP8 Change primary fuel filter element
- SP9 Change secondary fuel filter
- SP17 Check zinc electrodes

EVERY 600 HOURS:
- SP6 Check valve clearances
- SP11 Check injectors
- SP14 Check and flush cooling system
- SP16 Change impeller
- SP19 Check state of charge of batteries

EVERY 2400 HOURS:
- SP12 Check fuel injection pump
- SP15 Check and clean heat exchanger
- SP21 Check and clean oil cooler on reverse gear

SERVICE POINT	PAGE	OPERATION		DAILY	50 Hours	100 Hours	200 Hours	600 Hours	2400 Hours
		ENGINE:							
SP1	6 & 10	Check oil level		●					
SP2	10	Change engine oil	1)		5)	●	●		
SP3	10	Change lube oil filters	1)		5)		●		
SP4	10	Check air cleaner	1) 4)				●		
SP5	10	Check V-belt tension	1) 4)		●				
SP6	11	Check valve clearances	1) 2)		5)			●	
		FUEL SYSTEM:							
SP7	11 - 12	Check primary filter	2) 3)	●					
SP8	12	Change primary filter element	2) 3)				●		
SP9	12	Change secondary fuel filter	1) 3)				●		
SP10	12	Bleed the fuel system	3)						
SP11	13	Check injectors	1) 3)					●	
SP12	13 - 15	Check fuel injection pump							●
		COOLING SYSTEM:							
SP13	6 & 15	Check cooling water level		●					
SP14	15	Check and flush cooling system						●	
SP15	15	Check and clean heat exchanger							●
SP16	15	Change impeller in raw water pump	1) 3)					●	
SP17	15	Check zinc electrodes	4)				●		
		ELECTRICAL SYSTEM:							
SP18	16	Check electrolyte level in batteries	1) 4)		●				
SP19	16	Check condition of batteries with hydrometer	1) 4)					●	
		DRIVEN EQUIPMENT:							
SP20	17	Check oil level in reverse gear		●					
SP21	17	Change oil in reverse gear	2) 4)					●	
		OUT OF SERVICE:							
SP22	17	Winterizing or out-of-service	3)						

1) Perform all maintenance once a year even if hour level has not been reached.
2) Consult manufacturer's maintenance schedule, note on chart.
3) Whenever necessary.
4) More often if necessary.
5) After first 50 hours.
6) Adjust at first 100 hours.

Service Record

Service Point	OPERATION	HOURS/DATE									
50 HOURS											
SP5	Check V-belt tension										
SP18	Check electrolyte in batteries										
200 HOURS											
SP2	Change engine oil										
SP3	Change lubricating oil filters										
SP4	Check air cleaner										
SP7	Change primary filter element (Racor)										
SP9	Change secondary fuel filter										
SP17	Check zinc electrodes										
EVERY 600 HOURS											
SP6	Check valve clearances										
SP11	Check injectors										
SP14	Check and flush cooling system										
SP16	Change impeller in seawater pump										
SP19	Check condition of batteries with hydrometer										
2400 HOURS											
SP12	Check fuel injection pump										
SP15	Check and clean heat exchanger										
SP21	Check and clean oil cooler on reverse gear										

LUBRICATION - GENERAL

1. Use only clean, high quality lubricants stored in clean containers in a protected area.
2. These lubricants are acceptable:
   a. API Service CC/CD/CE single viscosity oils.
   b. API Service CC/CD/SF multi-viscosity oils.
3. Use the proper weight oil for your average operation temperature.

Air Temperature	Single Viscosity	Multi-Viscosity
Above 32°F (0°C)	SAE 30W	SAE 15-40W
-10 to 32°F (-23 to 0°C)	SAE 10W	SAE 10-30W
Below -10°F (-23°C)	SAE 5W	SAE 5-20W

Figure 5. *Lube Oils*

4. Some increase in oil consumption may be expected when SAE 5W and SAE 5-20W oils are used. Check oil level frequently.
5. Never put additives or flushing oil in crankcase.

SP1. CHECKING OIL LEVEL

1. Check the oil level in the crankcase with the dip-stick. The oil level must be in the waffled area on the stick. Never allow the level to go below this area. Follow the lubrication recommendations above.

SP2. OIL CHANGES

1. The set is delivered with special break-in oil. Change the engine oil and oil filter after 50 hours of operation. Use RPM Delo Series 100, 30 weight or equivalent Service CC 30 weight oil during the first 100 hours.
2. Change the oil and filter again at 100 hours using the oil recommended in the above diagram. After this, change oil and filter every 200 hours.
3. During intermittent cold weather operation, change oil every 100 hours or six weeks, whichever comes first.
4. Change oil at any seasonal change in temperature when a new viscosity of oil is required.
5. Change oil when engine is warm.
6. Dispose of waste oil in an approved manner.
7. Never use a flushing oil.
8. Locate the tube installed on the engine that goes to the bottom of the oil pan. Suck the oil out through this tube.
9. Refill engine with recommended oil.
10. Engine capacity oil filter is 9.6 qts. (9 liters).

SP3. CHANGING LUBE OIL FILTER

1. Change the lube oil filter every 200 hours.
2. Use a filter wrench to remove old filter. Dispose of filter in approved manner.
3. Make sure the gasket from the old filter is removed and discarded. Clean mount face.
4. Spread a thin film of engine oil on the rubber gasket on the new filter and screw it on nipple until gasket meets the sealing surface.
5. Using hands only – no wrench – tighten filter one-half turn farther. Overtightening can do damage to filter housing.
6. Fill engine with recommended oil. Start engine and check for leakage. Stop engine, wait 3 minutes, and check oil level. Add additional oil if necessary.
7. Oil filter part number is:
   24-05401

SP4. AIR CLEANER

1. Inspect air cleaner every 200 hours. In dusty conditions, check more often.

NOTES:

- *Make absolutely sure no impurities enter the engine while changing the element.*
- *Do NOT run the engine with the air cleaner removed.*
- *Do NOT clean filter with diesel fuel, solvent, or gasoline. Serious engine damage can result.*

SP5. V-BELTS

1. Check the tension and wear on the V-belt after every 50 hours, with the engine completely stopped.
2. Use your thumb to press on the belt at the midpoint between the crankshaft and alternator pulleys. The tension is correct of the belt can be depressed about 3/8-1/2 in. (8-13mm) with 22 lbs (10 kg) force.

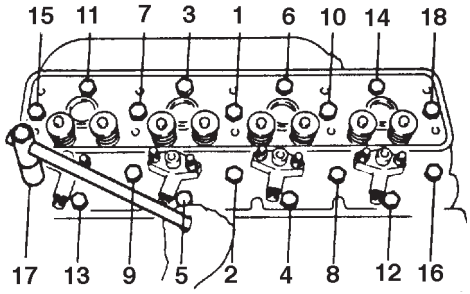

Figure 6. *Head Torque Sequence*

SP6. VALVE CLEARANCES

1. Adjust valve clearance after 600 hours of operation or as needed.
2. Warm up the engine to 167°-185°F (75-85°C). Shut off fuel and battery. *Caution : Engine hot!*
3. Rotate the crankshaft in clockwise direction to set cylinder No. 1 to the top dead center. Top dead center (TDC) is when notch "A" on pulley aligns with pointer and both valves on cylinder No. 4 rock (Figure 7).

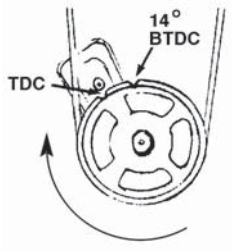

Figure 7. *Timing Marks*

4. Measure the valve clearance for each of the valves (shown as ◎ in Figure 8).
   Standard valve clearances for hot engine are:
   Intake (IN): 0.006-0.009 in (0.15-0.25 mm)
   Exhaust (EX): 0.013-0.016 in (0.31-0.41 mm)

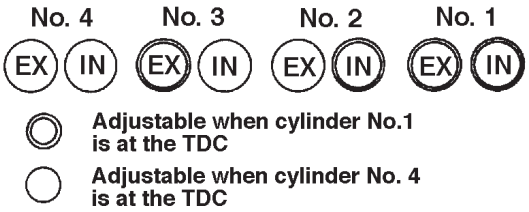

Figure 8. *Valve Sequence*

5. To adjust valve clearance, loosen set nut on adjustment screw. Insert feeler gauge between rocker arm and valve stem cap. Adjust until the feeler gauge slides with a slight drag. Tighten lock nut and recheck clearance (Figure 9).

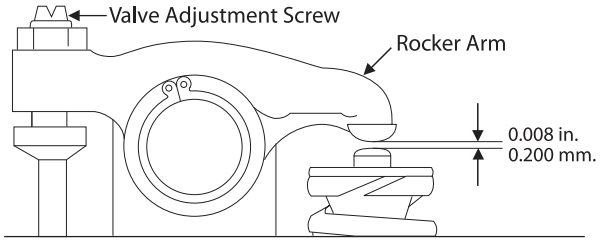

Figure 9. *Valve Adjustment*

6. Rotate crankshaft in clockwise direction one full turn to set cylinder No. 4 to TDC. Measure the remaining valves (shown as ○ in Figure 8).
7. Replace rocker arm cover.

FUELS - GENERAL

1. Use only clean, high quality fuels of the following specifications, as defined by ASTM designation D975 for diesel fuels:
   a. Use grade no. 2 diesel at ambient temperatures above freezing 32°F (0°C).
   b. Use grade no. 1 at ambient temperatures below freezing and for all temperatures at an altitude of above 5,500 ft. (1500 meters).
2. Use fuel having less that 1% sulphur (preferably less that 0.5%).
3. The cetane number should be a minimum of 45.
4. DO NOT use these unsuitable grades of fuel:
   a. Domestic heating oils, all types.
   b. Class B engine.
   c. Class D domestic fuels.
   d. Class E, F, G or H industrial or marine fuels.
   e. ASTM-D975-60T No. 4-D and higher number fuels.

5. Storing fuel:
   a. Keep dirt, scale, water and other foreign matter out of fuel.
   b. Avoid storing fuel for long periods of time.
   c. Fill the fuel tank at the end of each day's operation. This will reduce condensation.

SP7-9. FUEL FILTERS

1. Your generator set should have a primary fuel filter installed. We recommend the Racor brand of fuel filter-water separators.
   a. Check the primary fuel filter daily as recommended by the filter manufacturer. Empty the collection bowl as necessary.
   b. Change the element as often as necessary or every 200 hours.
   c. If the bowl fills with water, change the primary and secondary element immediately.

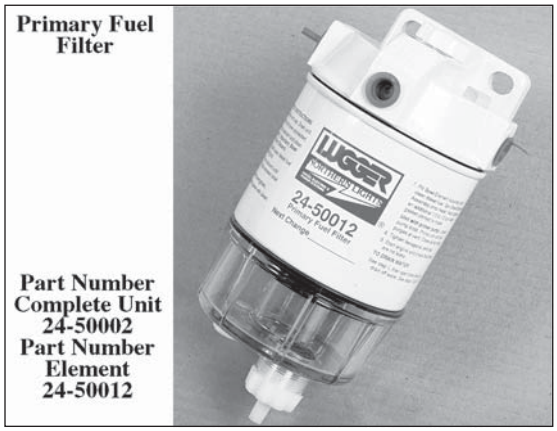

Figure 10. *Primary Fuel Filter*

2. Change secondary fuel filter every 200 hours. ***NOTE: The fuel filter on the engine is considered the "secondary fuel filter."***
   a. Remove the spin-on filter by turning it counterclockwise with a filter wrench. Fill the new cartridge with fuel and install it after applying engine oil to gasket surface. Screw on until the gasket surface comes into contact with sealing surface of filter base. Then, tighten it two-thirds of a turn by hand. Do not overtighten.
   b. Fuel filter part number is: 24-52020.

SP10. BLEEDING THE FUEL SYSTEM

CAUTION: Escaping diesel fuel under pressure can penetrate skin causing serious personal injury. Before disconnecting lines be sure to relieve all pressure. Before applying pressure, be sure all connections are tight and lines, pipes and hoses aren't damaged. Fuel escaping from a very small hole can be almost invisible. Use a piece of cardboard or wood, rather than hands, to search for suspected leaks. If injured by escaping fuel, see a doctor at once. Serious infection or reaction can develop if proper medical treatment isn't administered immediately.

1. The fuel system is self-bleeding. However, any system may need manual bleeding when:
   a. A new fuel filter is installed;
   b. The engine has run out of fuel;
   c. The fuel lines, injection pump or any other fuel system component has been removed and installed.

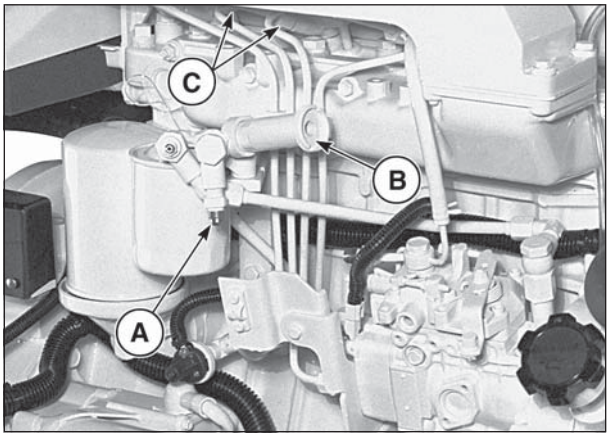

Figure 11. *Bleeding Fuel System*

2. Loosen bleed nipple "A" (Figure 11) on top of filter. Pump hand primer "B" on fuel lift pump until pure fuel (no bubbles) escapes from bleed nipple "A". Tighten bleed nipple "A".
3. If the engine does not start after the above bleeding process, loosen a fuel line at the injector (Figure 11, C). Crank engine until pure fuel escapes. Tighten the connection. Do each line **one-at-a-time.**
4. After the engine has started, use a piece of cardboard to look for fuel leaks.

SP11. INJECTOR SERVICE

1. Injectors should be checked every 600 hours. Check should be made by a Lugger dealer or local injection repair station.

CAUTION: Escaping diesel fuel under pressure can have sufficient force to penetrate the skin causing serious personal injury. If injured by escaping diesel fuel, see a doctor at once.

2. Injector removal:

a. Clean loose dirt from around the injectors and the fuel lines.

b. Relieve high pressure in the fuel lines by loosening the delivery line flare nuts at each injector.

c. Remove delivery lines by disconnecting from injectors and injection pump (Figure 12a). Remove all lines as an assembly; do not remove the spacers. Cover the ends of the lines, the injector inlets and injection pump outlets to keep dirt out.

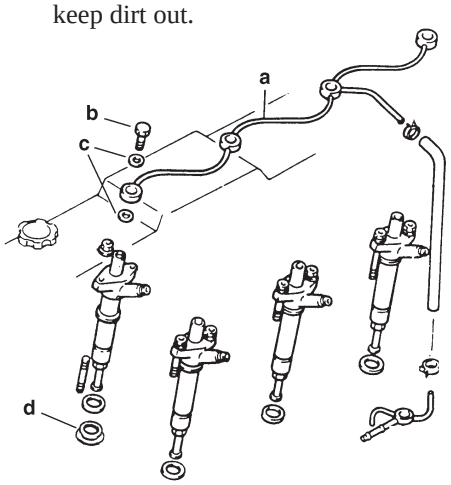

Figure 12. *Injectors (2201)*

d. Remove the return line retaining nuts (Figure 12b), washers (Figure 12c), and return line (Figure 12a).

e. Loosen injector retaining nuts equally, a little at a time. Remove the injector.

f. Remove the injector seat (Figure 12d). Cover holes to prevent debris from entering cylinders.

NOTE: Do not use pry bars to remove injectors from cylinder head.

3. Injector repair and cleaning:

a. Take injectors to your Lugger dealer or local injection repair station for testing and service.

4. Injector installation:

a. Install new injector seat and injector. Evenly tighten the injector retaining nuts to: 21.7~ 28.9 ft/lbs (300~ 400 kg/cm). Do not overtighten.

b. Reinstall return line (Figure 12a), using new sealing washers (Figure 12c). Tighten bolts to 8.54~ 9.62 ft/lbs (118~ 133 kg/cm).
NOTE: Overtightening can damage injector.

c. Reinstall injection lines. Tighten flare nuts at injection pump to 18.1~ 25.3 ft/lbs (250~ 350 k/cm). Leave lines loose at injectors for bleeding.

e. Bleed injection lines. Crank engine to fill lines. Tighten flare nuts at injectors to 18.2~ 25.3 ft/lbs (250~ 350 k/cm).

f. Start engine and check for leaks using a piece of paper or cardboard. **DO NOT use hand to check for leaks.**

SP12. INJECTION PUMP

1. Since operating conditions may vary considerably, it is difficult to give a definite interval for checking the injection pump. But as a rule, pump settings, maximum speed, idle speed and exhaust smoke should be checked after every 2400 hours of operation. Service of the fuel injection pump should only be done if checks indicate pump malfunction.
2. Black smoke can be an indication of pump malfunction. Before servicing the pump, check other possible causes:
   a. Check cleanliness of air filter.
   b. Check valve clearances.
   c. Clean and check injectors.
3. Any repair which involves disassembly of the injection pump must be carried out by specially trained mechanics with the proper tools and test equipment.
   NOTE: All warranties on the engine become null and void if the injection pump seals are broken by unauthorized persons.

4. Injection Pump Removal *continued*:

CAUTION: Escaping diesel fuel under pressure can have sufficient force to penetrate the skin causing serious personal injury. If injured by escaping diesel fuel, see a doctor at once.

a. Clean injection pump, hoses and area around pump with cleaning solvent or steam cleaner.
NOTE: Never steam clean or pour cold water on an injection pump while the engine is running or the pump is warm.
b. Remove injection lines (Figure 13 #2) from pump and injectors. Remove all lines as an assembly. Do not remove the spacers. Cover the ends of the lines, the injector inlets and injection pump outlets to keep dirt out of injectors, lines and pump.
c. Remove pump support bracket (Figure 13 #4) on rear of pump.
d. Remove plug (Figure 13 #5) from timing case cover. Use an indelible marker to put a mark on injection pump gear through plug hole. You will use this mark to align pump during reassembly. Do not rotate crankshaft after marking.
e. Remove 2 mounting nuts:
One (1) on left hand and one (1) on right hand side of injection pump.
f. Take pump to your Lugger dealer or an injection repair station for testing and service.

5. Injection Pump Installation:

a. Reverse removal procedure.
b. Make sure mark on gear shows through plug hole.
c. Torque mounting bolts to:
43.4~ 55.0 ft/lbs (300~ 450 k/cm).

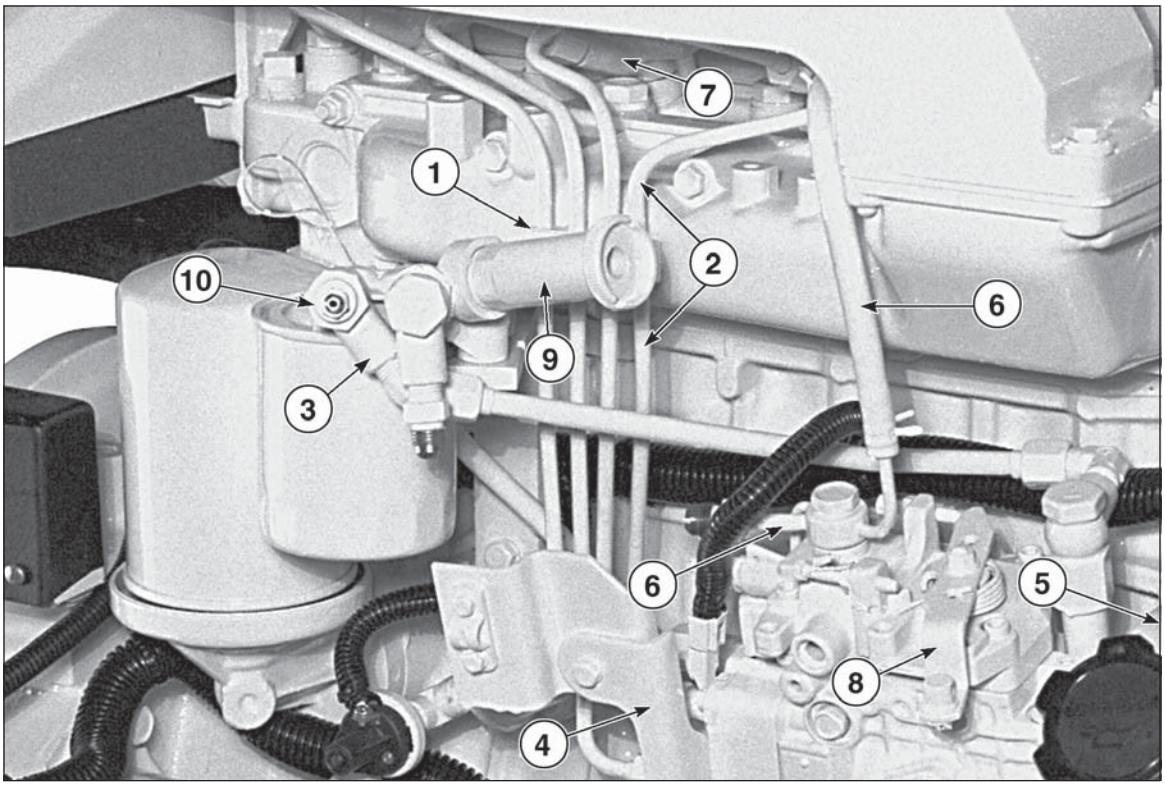

Figure 13. *Fuel System*

1. Injection line clamps
2. Fuel injection lines
3. Fuel feed line
4. Pump support bracket
5. Timing mark plug
6. Fuel return line
7. Injector
8. Throttle
9. Hand priming pump
10. Air vent point

INJECTION PUMP TIMING

1. The injection pump is timed at the factory and the pump body and mounting flange are marked.

COOLING SYSTEM - GENERAL

NOTE: Be sure to close the sea-cock before working on the engine cooling system.

CAUTION: The cooling water in the engine reaches extremely high temperatures. You must use extreme caution when working on hot engines to avoid burns. Allow the engine to cool before working on the cooling system. Open the filler cap carefully, using protective clothing when the engine is warm.

SP13. CHECK THE COOLANT LEVEL

1. Check the coolant level each day before starting the engine. Remove the pressure cap from the expansion tank or radiator. In order to give the cooling water an opportunity to expand, the level should be about 1 in. (2.5 cm) below the filler cap sealing surface when the engine is cold.
2. The pressure valve in the filler cap releases when the pressure is approximately 7 PSI (0.5 bar). Use a cap pressure tester to check cap if you suspect it is faulty.

SP14. COOLING SYSTEM FLUSHING

1. Flush the cooling system every 600 hours or every 12 months, whichever comes first.
   a. Remove expansion tank cap and drain engine block.
   b. Open block drain cock. Remove hose from bottom of heat exchanger tank.
   c. Pour clean water into expansion tank until water coming from drains is free of discoloration and sediment. Let water drain completely. Close drains and refill with recommended mixture.
2. Coolant Specifications.
   Use 50% water / 50% ethylene glycol antifreeze mix. Antifreeze mixture is recommended as a good year-round coolant.
3. Check hoses and connections and repair any leakage.

NOTE: Be sure to open the sea-cock after working on the cooling system and starting engine.

SP15. HEAT EXCHANGER

1. Clean the heat exchanger core once a year or after 2400 hours of operation.
2. Drain expansion tank and heat exchanger.
3. Remove heat exchanger end covers and remove core.
4. Clean the inside of exchanger core tubes using a metal rod. Flush, inspect and clean again if necessary.
5. Reassemble. Fill the cooling system, start the engine and check for leaks.

SP16. RAW WATER PUMP

1. Change the seawater pump impeller every 600 hours, or as needed.
2. Remove the pump end cover. Pry out the impeller using needle-nose pliers or two screwdrivers. Be sure you remove all pieces of failed impeller.
   NOTE: Place some kind of protection under the screwdrivers in order not to damage the pump housing.
3. Clean the inside of the housing.
4. Press in the new impeller and place the sealing washers in the outer end of the impeller center if this has not already been done.
5. Replace the cover using a new gasket.
   NOTE: Make sure that there is always an extra impeller and cover gasket in reserve on board.

SP 17. ZINC ELECTRODES

1. A zinc electrode is installed in the heat exchanger cooling system to protect the engine from electrolysis. Check it faithfully every 200 hours. If you are in warm saltwater or where electrolysis is a known problem, check it more often.
2. Remove zinc holder from the bottom of exchanger (see Figure 4 #12). This will drain raw water from the exchanger.
3. Scrape or steel brush the zinc electrode clean. If more than 50% of the electrode is corroded away, replace it with a new zinc. The electrode screws out of the holder.
4. Reinstall the zinc holders. Be sure the threads are clean for good metal-to-metal contact. Do not use thread sealant.
5. Refill cooing system, start engine, and check for leaks.

P.T.O.

There are no servicing requirements for the Optional P.T.O. with Electric Clutch.

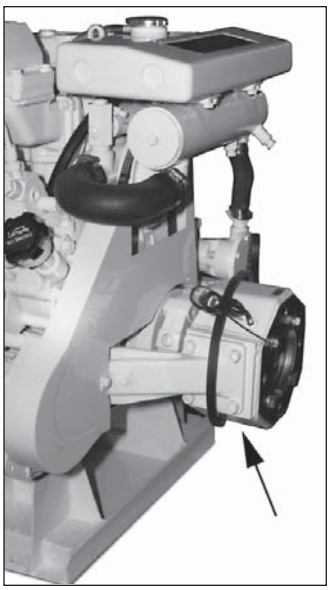

Figure 14. *Optional P.T.O. with Electric Clutch*

ELECTRICAL SYSTEM - GENERAL

1. Never switch battery switch off or break the circuit between the alternator and batteries while the engine is running. Regulator damage can result.
2. Do NOT reverse the polarity of battery cables when installing the battery.

BOOSTER BATTERIES

CAUTION: Battery gas can explode. Keep all flames and sparks away from batteries.

1. Before changing or using booster batteries, check battery electrolyte level. Add distilled water if necessary.
2. Booster and main batteries must have the same voltage rating.
3. First, connect positive (+) terminal of booster battery to positive (+) terminal of main battery. Then, connect negative (-) terminal of booster battery to ground on the engine block (see Figure 15).
4. Remove booster battery after starting engine.
5. Sealed batteries: See manufacturer charging and booster instructions.

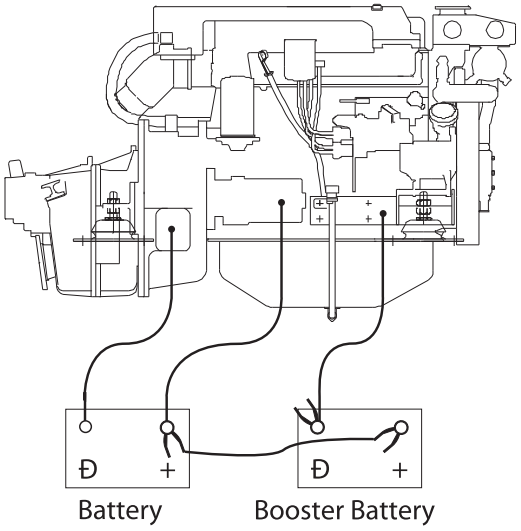

Figure 15. *Booster Battery Connections*

SP 18-19. BATTERY CARE

1. Check electrolyte level every 50 hours or once per month. Add distilled water to manufacturers recommended level.
2. Batteries, cables and cable terminals should be checked and cleaned every 100 hours. Clean corrosion with a water and baking soda solution. Flush with clean water. Tighten terminals and grease them to inhibit corrosion.
3. Check the battery condition with a hydrometer every 600 hours.

SP20-21. MARINE REVERSE GEARS

1. Manufacturer's service recommendations vary. See your Owner's Manual for service information. If you do not have a manual, see your local dealer for the equipment in question.

NOTE: Some marine gears have rigid lubrication requirements. Follow service recommendations closely.

SP20. WINTERIZING / OUT-OF-SERVICE

Remember to close sea-cocks before opening drain cocks.

1. Drain fresh water and seawater cooling systems completely. Flush fresh water system and refill with proper antifreeze mixture.
2. Drain water supply lines and wet exhaust line.
3. Loosen the seawater pump cover and drain pump.
4. Change the crankcase oil and filter.
5. Loosen the alternator belt.
6. Disconnect and clean battery. Remove to warm storage place if possible.
7. Clean outside of unit. Paint any scratched or chipped surfaces. Put corrosion preventative on all exposed metal surfaces.

Troubleshooting

If you cannot correct problems with these procedures, see your **Lugger** dealer.

DC ELECTRICAL SYSTEM

✔ Battery Will Not Charge

Loose or corroded connections:
- Clean and tighten battery connections.

Sulfated or worn out batteries:
- Check specific gravity of each battery.
- Check electrolyte level of each battery.

Loose or defective alternator belt:
- Adjust belt tension.
- Replace belt.

✔ Starter Inoperative

Check DC circuit breaker:
- If the breaker is tripped, reset it.

Loose or corroded connections:
- Clean and tighten loose battery and harness plug connection.

Low battery output:
- Check specific gravity of each battery.
- Check electrolyte level of each battery.

Defective electrical system ground wire:
- Repair or replace.

✔ Starter Cranks Slowly

Low battery output:
- Battery is too small.
- Battery cables are too small.

Check specific gravity of each battery:
- Replace battery if necessary.

Check electrolyte level of each battery:
- If low, fill cells with distilled water.

Crankcase oil too heavy:
- Fill with oil of appropriate viscosity.

Loose or corroded connections:
- Clean and tighten loose connections.

✔ Entire Electrical System Does Not Function

Check DC circuit breaker:
- If breaker is tripped, reset it.

Faulty connection:
- Clean and tighten battery and harness plug connections.

Sulfated or worn out batteries:
- Check specific gravity and electrolyte level of each battery.

ENGINE

✔ Engine Hard to Start or Will Not Start

Improper starting procedure:
- See starting section of this manual. Take special note of Bypass Switch operation.

No fuel:
- Check level of fuel in fuel tank.

Low battery output:
- Check electrolyte level and condition.

Excessive resistance in starting circuit:
- Clean and tighten all battery connections.

Crankcase oil too heavy:
- Use oil of proper viscosity.

Improper type of fuel:
- Consult fuel supplier and use proper type of fuel for operating condition.

Water, dirt or air in fuel system:
- Drain, flush, fill and bleed system.

Clogged primary fuel filter element:
- Clean or replace filter element.

Clogged secondary fuel filter element:
- Replace filter element.

Dirty or faulty injection nozzles:
- Have your dealer check injection nozzles.

✔ Engine Runs Irregularly or Stalls Frequently

Below normal engine temperature:
- Remove and check thermostat.

Clogged primary fuel filter element:
- Clean or replace filter element.

Clogged secondary fuel filter element:
- Replace secondary filter element.

Water or dirt in the fuel system:
- Drain, flush, fill and bleed system.

Dirty or faulty injection nozzles:
- Have your dealer check injection nozzles.

Air in fuel system:
- Inspect clamps and hoses on suction side of fuel pump for air leak.

Improper type of fuel:
- Consult fuel supplier and use proper type of fuel for operating condition.

✔ Lack of Engine Power

Intake air restriction:
- Service air cleaner.

Clogged primary fuel filter element:
- Clean or replace filter element.

Clogged secondary fuel filter element:
- Replace filter element.

If you cannot correct problems with these procedures, see your **Lugger** dealer.

- **Lack of Engine Power** (continued)

  Improper type of fuel:
  - Consult fuel supplier and use proper type of fuel for operating conditions.

  Overheated engine:
  - See "Engine Overheats" in next category.

  Below normal engine temperature:
  - Remove and check thermostat.

  Improper valve clearance:
  - Reset valves. Best done by dealer.

  Dirty or faulty injection nozzles:
  - Replace injectors. Best done by dealer.
  - See your local dealer.

- **Engine Overheats**

  Low coolant level:
  - Fill tank or radiator to proper level.
  - Check hoses for loose connections and leaks.

  Keel cooling tubes have been painted (marine):
  - Remove paint from tubes.

  Cooling system needs flushing:
  - Flush cooling system.

  Defective thermostat:
  - Remove and check thermostat.

  Defective temperature gauge:
  - Check water temperature with thermometer and replace gauge if necessary.

  Water pump impeller worn/broken:
  - Check impeller and replace if necessary.

- **Engine Knocks**

  Insufficient oil:
  - Call your dealer.

  Injection pump out of time:
  - Call your dealer.

  Below normal engine temperature:
  - Check your thermostats.
  - Check water temperature to see if temperature gauge is working properly.

  Engine overheating:
  - See "Engine Overheating" section.

- **High Fuel Consumption**

  Improper type of fuel:
  - Use correct fuel for temperature.

  Clogged or dirty air cleaner:
  - Service air cleaner.

  Improper valve clearance:
  - See your dealer.

  Injection nozzles dirty:
  - See your dealer.

- **High Fuel Consumption** (continued)

  Injection pump out of time:
  - See your dealer.

  Engine not at proper temperature:
  - Check your thermostats.
  - Check water temperature with thermometer and replace gauge if necessary.

- **Below Normal Engine Temperature**

  Thermostats not working properly:
  - Check thermostats.

  Temperature gauge not working properly:
  - Check water temperature with thermometer.

- **Low Oil Pressure**

  Low oil level:
  - Fill crankcase to proper level.

  Improper type of oil:
  - Drain and fill crankcase with correct oil.

  Partially plugged oil filter:
  - Replace filter.

- **High Oil Consumption**

  Break-in period:
  - Oil consumption decreases after break in.

  Crankcase oil too light:
  - Use proper viscosity oil.

  Oil leaks:
  - Check for leaks in lines around gaskets and drain plug.

- **Engine Emits Black or Gray Exhaust Smoke**

  Clogged or dirty air cleaner:
  - Service air cleaner.

  Defective muffler (back pressure too high):
  - Have dealer check back pressure.

  Improper fuel:
  - Use correct fuel for temperature.

  Injection nozzles dirty:
  - See your dealer.

  Engine out of time:
  - See your dealer.

- **Engine Emits White Smoke**

  Improper fuel:
  - Use correct fuel for temperature.

  Cold engine:
  - Warm up engine to normal operating temperature.

  Defective thermostat:
  - Remove and check thermostat.

  Engine out of time:
  - See your dealer.

General

Model Number L984
Cylinders ..... 4 In-line
Displacement ..... 212 CID (3.47 ltr)
Operating Cycle 4
Bore ..... 3.85 in (98 mm)
Stroke ..... 4.5 in (115 mm)
Aspiration ..... Natural
Dry Weight
with Hurth 450 Gear
and Heat Exchanger ..... 787 lbs. (357 kg)

Cooling (General)

Freshwater circulating flow at 2500 RPM ..... 28 gpm (106 lpm)
Heat rejection to jacket water at 2500 RPM ..... 1641 BTU-min.

Cooling (Heat Exchanger)

Raw-water Intake ..... 1 in. NPT (25 mm)
Raw-water Discharge Diameter ..... 1 in. NPT (25 mm)
Raw-water Pump Flow at 2500 RPM ..... 16 gpm (60 lpm)
Raw-water Pump Maximum Suction Head ..... 39 in. (1 m)
Maximum Raw-water Temperature at Inlet ..... 86° F (30° C)
Freshwater System Capacity ..... 3.5 gal (12 ltr)

Cooling (Keel Cooled)

Water Hose Inside Diameter ..... 1-1/2 in (38 mm)
Head Diameter ..... 1-1/4 in
Turbo Tube Length* ..... 12 ft
One Inch Plain Round Tube Length* ..... 20 ft
Skin Cooler Aluminum* ..... 10 sq ft (1 m^2)
Skin Cooler Steel* ..... 30 sq ft (2.8 m^2)

Electrical

Minimum Battery Capacity ..... 200 amp hours / 640 cca
Battery Cable Size ..... 1/0 up to 10 ft run
Standard Instrument Harness Length ..... 20 ft (6 m)

Air

Engine Air Consumption at 2500 RPM ..... 104 cfm (2.9 m^3/min)
Minimum Engine Room Vent Area ..... 30 sq in (193 cm^2)
Exhaust gas flow at 2500 RPM ..... 330 cfm (9.3 m^3/min)
Exhaust gas temperature at 2500 RPM ..... 1200° F (650° C)
Maximum Exhaust Back Pressure ..... 48 in (122 cm) H_20
Suggested Dry Exhaust I.D. ..... 2-1/2 in (63 mm)
Suggested Wet Exhaust I.D. ..... 3 in (75 mm)

Fuel and Oil

Minimum Fuel Suction Line ..... 3/8 in (10 mm)
Minimum Fuel Return Line ..... 3/8 in (10 mm)
Maximum Fuel Pump Head ..... 39 in (1 m)
Crankcase Oil Capacity ..... 9.6 U.S. qts (9 ltr)

Gear, PTO, Engine Angle

Engine Rotation (Facing Flywheel) ..... Counter-clockwise
Flywheel Housing Size ..... SAE 4
Pump Mount PTO Size ..... 28 hp, 2 bolt SAE J744 A Spline
Max. Intermittent Engine Operating Angle, Front Down ..... 10°
Max. Intermittent Engine Operating Angle, Rear Down ..... 30°

**Based on 70° F seawater temperature and minimum boat speed of 8 knots at full speed. Return water on keel cooling 70° to 130° F.*

NOTE: ***Specifications are subject to change without notice.***

Performance Data

DUTY RATING	OUTPUT
Rated Output	70 hp (55 KW) at 2500 RPM
Shaft Output	67.5 hp (50 KW) at 2500 RPM
Maximum Torque	173 ft lbs at 1700 RPM
Fuel Consumption (Gallons per Hour)	0.75 at 1500 RPM 1.11 at 1700 RPM 1.57 at 1900 RPM 2.16 at 2100 RPM 2.89 at 2300 RPM 3.85 at 2500 RPM

Propeller Sizing and Marine Gears

1. Use this chart to find the approximate propeller size for your vessel. See a dealer for specific recommendations.
2. In the left hand column, find the boat speed your architect or boatbuilder expects from an engine of this size.
3. Read across for gear ratio. Read down for propeller size, prop RPM, and stainless steel prop shaft recommendation.

Speed	Gear Ratios and 3 Bladed Propellers				
(knots)	1:1	1.5:1	2:1	2.5:1	3:1
8 - 10	–	–	–	–	–
10 - 13	–	–	–	–	25 x 22
12 - 14	–	–	–	22 x 20	–
13 - 15	–	–	19 x 18	–	–
14 - 17	–	16 x 15	–	–	–
15 - 18	13 x 12	–	–	–	–
Prop RPM	2500	1666	1250	1000	833
Shaft (in)	1	1-1/4	1-1/2	1-1/2	1-3/4

Gear	Model	Ratios	Applications
Hurth	HBW250	1.54:1, 1.88:1, 1.74:1	Pleasure & Commercial

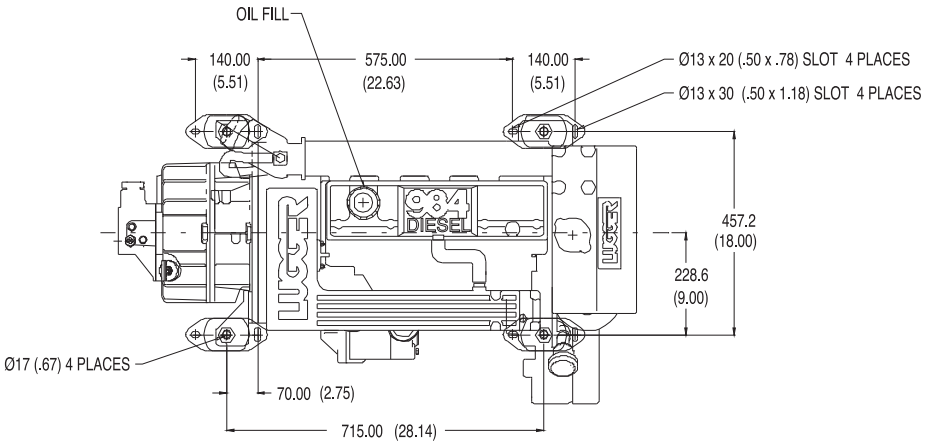
OIL FILL
140.00
(5.51)
575.00
(22.63)
140.00
(5.51)
Ø13 x 20 (.50 x .78) SLOT 4 PLACES
Ø13 x 30 (.50 x 1.18) SLOT 4 PLACES
DIESEL
457.2
(18.00)
228.6
(9.00)
Ø17 (.67) 4 PLACES
70.00 (2.75)
715.00 (28.14)

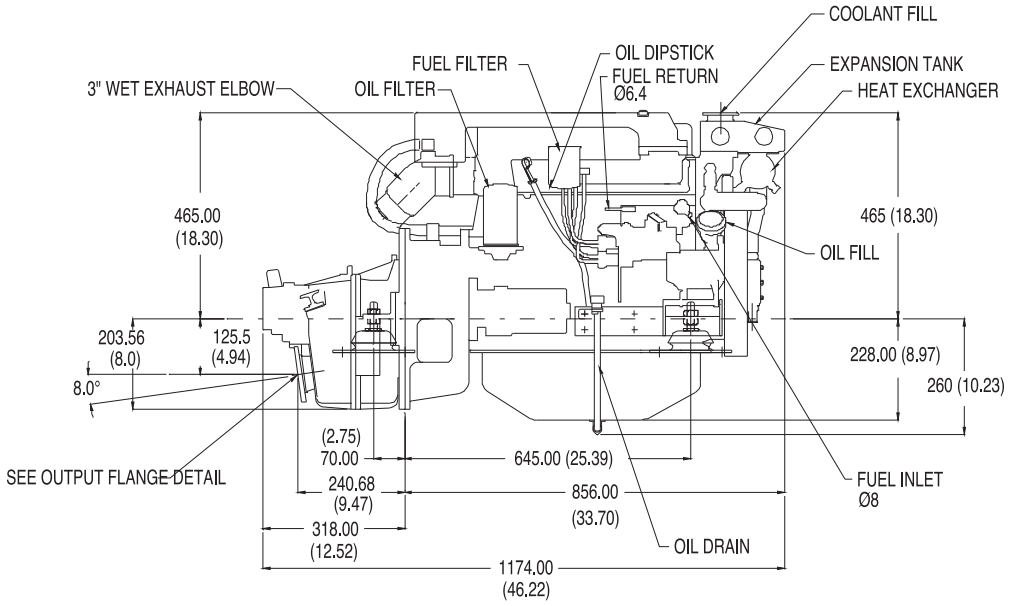
COOLANT FILL
FUEL FILTER
OIL DIPSTICK
FUEL RETURN
Ø6.4
EXPANSION TANK
3" WET EXHAUST ELBOW
OIL FILTER
HEAT EXCHANGER
465.00
(18.30)
465 (18.30)
OIL FILL
203.56
(8.0)
125.5
(4.94)
228.00 (8.97)
8.0°
260 (10.23)
(2.75)
70.00
645.00 (25.39)
SEE OUTPUT FLANGE DETAIL
240.68
(9.47)
856.00
(33.70)
FUEL INLET
Ø8
318.00
(12.52)
OIL DRAIN
1174.00
(46.22)

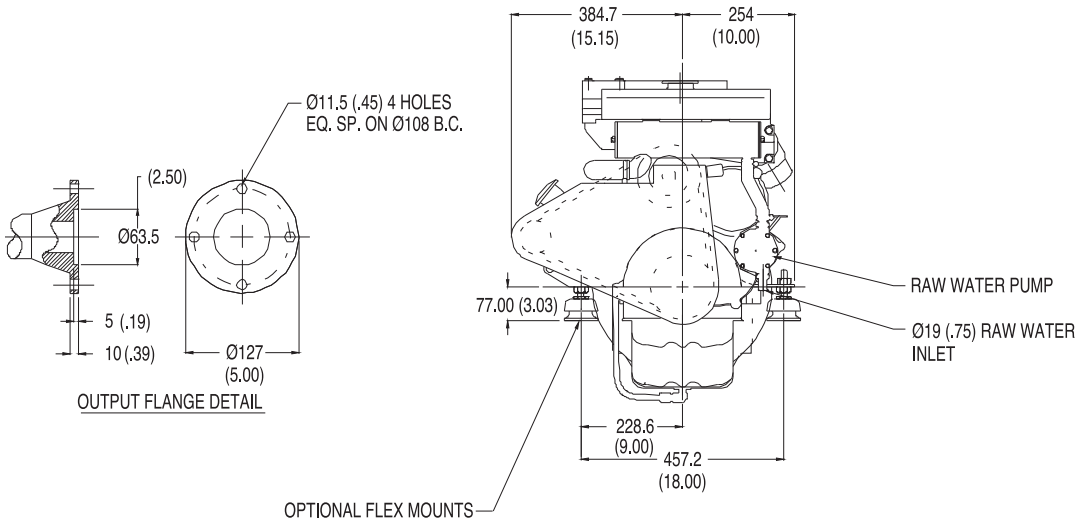
384.7
(15.15)
254
(10.00)
Ø11.5 (.45) 4 HOLES
EQ. SP. ON Ø108 B.C.
(2.50)
Ø63.5
RAW WATER PUMP
77.00 (3.03)
Ø19 (.75) RAW WATER
INLET
5 (.19)
10 (.39)
Ø127
(5.00)
OUTPUT FLANGE DETAIL
228.6
(9.00)
457.2
(18.00)
OPTIONAL FLEX MOUNTS

Engine DC Schematic – Lugger

L984 12V STD. GROUND
Drawing C-3580D

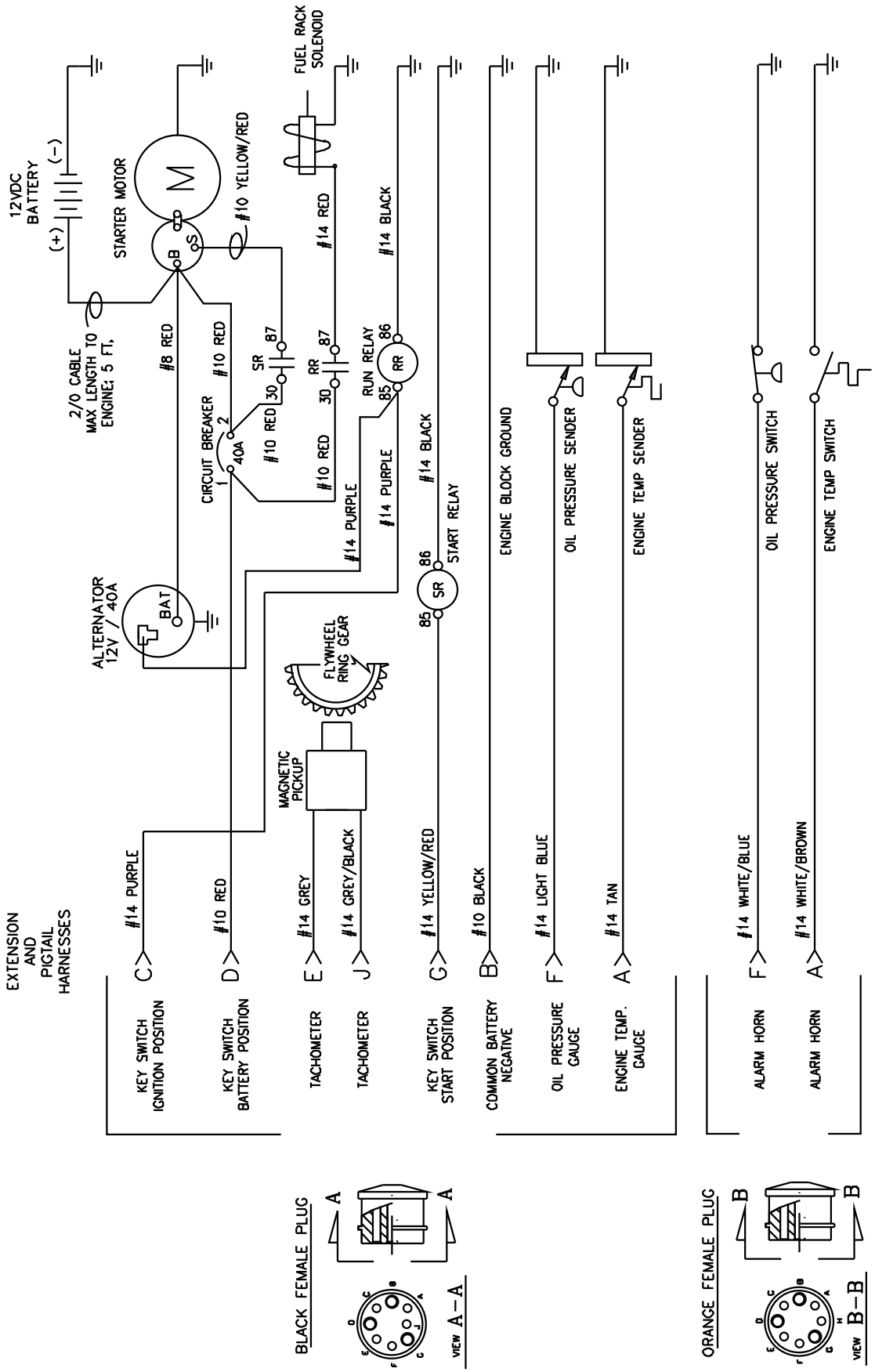

Panel DC Schematic – Lugger

L984 12V STD. GROUND
Drawing C-3581

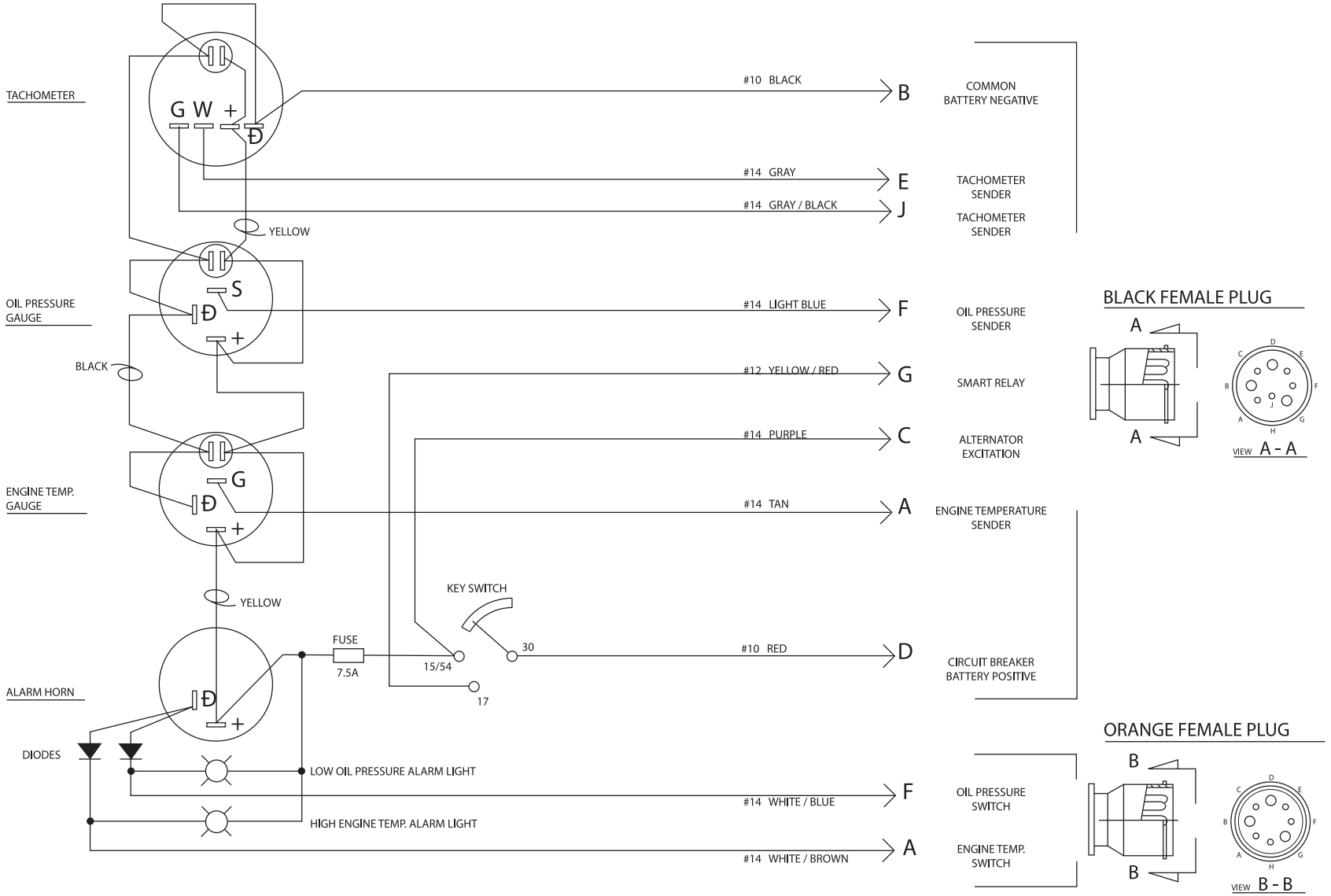

Notes



www.northern-lights.com

4420 14th Ave. NW., Seattle WA 98107
Tel: (206) 789-3880 • 1-800-762-0165 • Fax: (206) 782-5455
Northern Lights and Lugger are registered trademarks of Northern Lights, Inc.
© 2010 All rights reserved. Litho USA.